Lumber design values are in accordance with ANSI/TPI 1 section 6.3
These truss designs rely on lumber values established by others.

RE: 250620-02KM - Mitch Brown

MiTek, Inc.
16023 Swingley Ridge Rd.
Chesterfield, MO 63017
314.434.1200

Site Information:
Customer Info: Mitch Brown Project Name: . Model: ..
Lot/Block: . Subdivision: .
Address: Old Bellamy Rd., .
City: Fort White State: Fl.

Name Address and License # of Structural Engineer of Record, If there is one, for the building.
Name: License #:
Address:
City: State:

General Truss Engineering Criteria & Design Loads (Individual Truss Design Drawings Show Special Loading Conditions):
Design Code: FBC2023/TPI2014 Design Program: MiTek 20/20 8.7
Wind Code: ASCE 7-22 Wind Speed: 130 mph
Roof Load: 34.0 psf Floor Load: N/A psf

This package includes 52 individual, Truss Design Drawings and 0 Additional Drawings.
With my seal affixed to this sheet, I hereby certify that I am the Truss Design Engineer and this index sheet conforms to 61G15-31.003, section 5 of the Florida Board of Professional Engineers Rules.

No.	Seal#	Truss Name	Date	No.	Seal#	Truss Name	Date
1	T37696790	GE01	6/23/25	23	T37696812	T09	6/23/25
2	T37696791	G01	6/23/25	24	T37696813	T10	6/23/25
3	T37696792	S01	6/23/25	25	T37696814	T11	6/23/25
4	T37696793	S02	6/23/25	26	T37696815	T12	6/23/25
5	T37696794	H02	6/23/25	27	T37696816	T13	6/23/25
6	T37696795	H03	6/23/25	28	T37696817	T14	6/23/25
7	T37696796	H04	6/23/25	29	T37696818	T15	6/23/25
8	T37696797	H05	6/23/25	30	T37696819	T16	6/23/25
9	T37696798	H06	6/23/25	31	T37696820	GE03	6/23/25
10	T37696799	T01	6/23/25	32	T37696821	T17	6/23/25
11	T37696800	T02	6/23/25	33	T37696822	SGE01	6/23/25
12	T37696801	H07	6/23/25	34	T37696823	H01	6/23/25
13	T37696802	J05	6/23/25	35	T37696824	CJ01	6/23/25
14	T37696803	GE02	6/23/25	36	T37696825	J01	6/23/25
15	T37696804	T03	6/23/25	37	T37696826	J02	6/23/25
16	T37696805	T04	6/23/25	38	T37696827	J03	6/23/25
17	T37696806	T05	6/23/25	39	T37696828	J04	6/23/25
18	T37696807	M02	6/23/25	40	T37696829	H08	6/23/25
19	T37696808	H15	6/23/25	41	T37696830	H09	6/23/25
20	T37696809	T06	6/23/25	42	T37696831	H10	6/23/25
21	T37696810	T07	6/23/25	43	T37696832	H11	6/23/25
22	T37696811	T08	6/23/25	44	T37696833	H12	6/23/25

The truss drawing(s) referenced above have been prepared by MiTek USA, Inc. under my direct supervision based on the parameters provided by Coastal Truss & Vinyl Siding.

Truss Design Engineer's Name: Lee, Julius
My license renewal date for the state of Florida is February 28, 2027.

IMPORTANT NOTE: The seal on these truss component designs is a certification that the engineer named is licensed in the jurisdiction(s) identified and that the designs comply with ANSI/TPI 1. These designs are based upon parameters shown (e.g., loads, supports, dimensions, shapes and design codes), which were given to MiTek or TRENCO. Any project specific information included is for MiTek's or TRENCO's customers file reference purpose only, and was not taken into account in the preparation of these designs. MiTek or TRENCO has not independently verified the applicability of the design parameters or the designs for any particular building. Before use, the building designer should verify applicability of design parameters and properly incorporate these designs into the overall building design per ANSI/TPI 1, Chapter 2.

JULIUS LEE
LICENSE
No. 34869
STATE OF
FLORIDA
PROFESSIONAL ENGINEER

Julius Lee PE No. 34869
MiTek Inc. DBA MiTek USA FL Cert 6634
16023 Swingley Ridge Rd. Chesterfield, MO 63017
Date:

June 23,2025

Lee, Julius

RE: 250620-02KM - Mitch Brown

MiTek, Inc.
16023 Swingley Ridge Rd.
Chesterfield, MO 63017
314.434.1200

Site Information:

Customer Info: Mitch Brown Project Name: . Model: ..
Lot/Block: . Subdivision: .
Address: Old Bellamy Rd., .
City: Fort White State: Fl.

No.	Seal#	Truss Name	Date
45	T37696834	H13	6/23/25
46	T37696835	H14	6/23/25
47	T37696836	CJ02	6/23/25
48	T37696837	J06	6/23/25
49	T37696838	J07	6/23/25
50	T37696839	J08	6/23/25
51	T37696840	J09	6/23/25
52	T37696841	J10	6/23/25

Job	Truss	Truss Type	Qty	Ply	Mitch Brown
250620-02KM	GE01	Common Supported Gable	1	1	T37696790 Job Reference (optional)

Coastal Truss & Vinyl Siding, Patterson, GA - 31577,

Run: 8.73 S Feb 19 2025 Print: 8.730 S Feb 19 2025 MiTek Industries, Inc. Fri Jun 20 12:42:42 Page: 1
ID:QRQeUdX6ypzR8LDCeuWkdbz4Ocy-RfC?PsB70Hq3NSgPqnL8w3uITXbGKWrCDoi7J4zJC?f

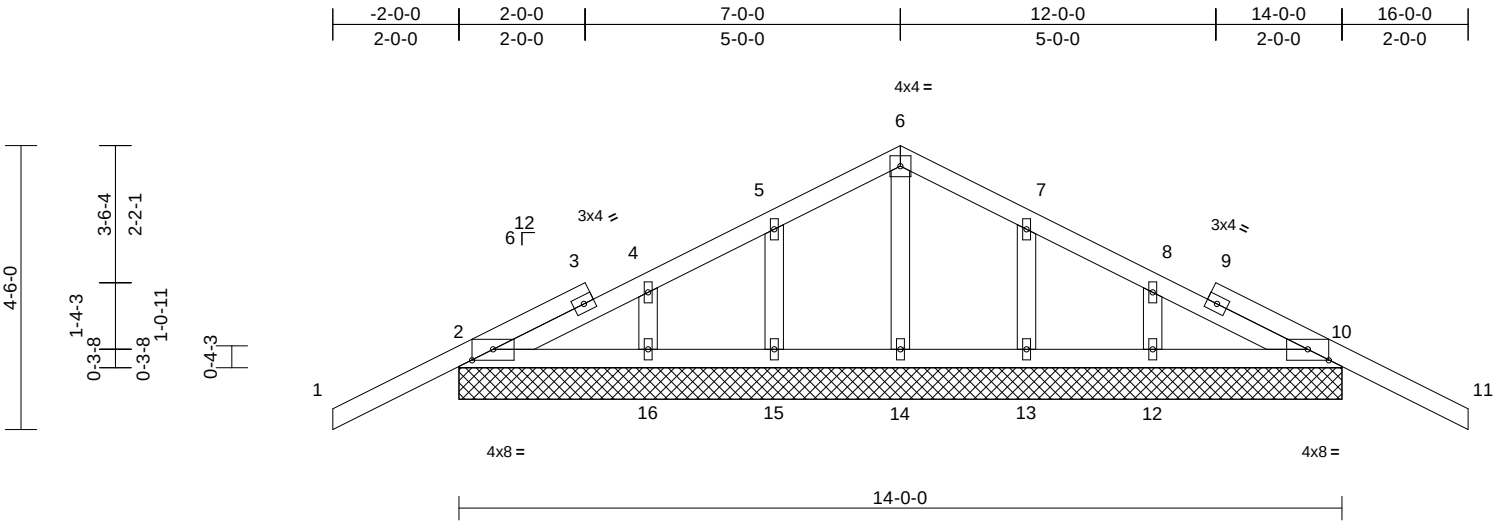

Scale = 1:36.5

Plate Offsets (X, Y): [2:0-4-0,0-2-1], [10:0-4-0,0-2-1]

Loading	(psf)	Spacing	2-0-0	CSI		DEFL	in	(loc)	l/defl	L/d	PLATES	GRIP
TCLL (roof)	20.0	Plate Grip DOL	1.25	TC	0.38	Vert(LL)	n/a	-	n/a	999	MT20	244/190
TCDL	7.0	Lumber DOL	1.25	BC	0.09	Vert(CT)	n/a	-	n/a	999		
BCLL	0.0*	Rep Stress Incr	YES	WB	0.03	Horz(CT)	0.00	20	n/a	n/a		
BCDL	7.0	Code	FBC2023/TPI2014	Matrix-MS							Weight: 69 lb	FT = 20%

LUMBER

TOP CHORD 2x4 SP No.2
BOT CHORD 2x4 SP No.2
OTHERS 2x4 SP No.2

BRACING

TOP CHORD Structural wood sheathing directly applied or 6-0-0 oc purlins.
BOT CHORD Structural wood sheathing directly applied or 6-0-0 oc bracing.

REACTIONS (size) 2=14-0-0, 10=14-0-0, 12=14-0-0, 13=14-0-0, 14=14-0-0, 15=14-0-0, 16=14-0-0
Max Horiz 2=-107 (LC 10)
Max Uplift 2=-173 (LC 12), 10=-173 (LC 12), 12=-27 (LC 8), 13=-78 (LC 12), 15=-78 (LC 12), 16=-26 (LC 9)
Max Grav 2=242 (LC 1), 10=242 (LC 1), 12=147 (LC 18), 13=147 (LC 18), 14=121 (LC 17), 15=148 (LC 17), 16=143 (LC 17)

FORCES (lb) - Maximum Compression/Maximum Tension
TOP CHORD 1-2=0/48, 2-4=-97/69, 4-5=-57/101, 5-6=-58/188, 6-7=-58/188, 7-8=-31/99, 8-10=-90/39, 10-11=0/48
BOT CHORD 2-16=-38/155, 15-16=-33/133, 14-15=-33/133, 13-14=-33/133, 12-13=-33/133, 10-12=-43/165
WEBS 6-14=-93/0, 5-15=-121/184, 4-16=-114/157, 7-13=-120/184, 8-12=-116/155

NOTES

1) Unbalanced roof live loads have been considered for this design.
2) Wind: ASCE 7-22; Vult=130mph (3-second gust) Vasd=101mph; TCDL=4.2psf; BCDL=4.2psf; h=18ft; B=50ft; L=30ft; eave=2ft; Cat. II; Exp C; Enclosed; MWFRS (directional) and C-C Zone3 zone; cantilever left and right exposed ; end vertical left and right exposed;C-C for members and forces & MWFRS for reactions shown; Lumber DOL=1.60 plate grip DOL=1.60
3) Truss designed for wind loads in the plane of the truss only. For studs exposed to wind (normal to the face), see Standard Industry Gable End Details as applicable, or consult qualified building designer as per ANSI/TPI 1.
4) Building Designer / Project engineer responsible for verifying applied roof live load shown covers rain loading requirements specific to the use of this truss component.
5) All plates are 1.5x4 MT20 unless otherwise indicated.
6) Gable requires continuous bottom chord bearing.
7) Gable studs spaced at 2-0-0 oc.
8) This truss has been designed for a 10.0 psf bottom chord live load nonconcurrent with any other live loads.
9) * This truss has been designed for a live load of 20.0psf on the bottom chord in all areas where a rectangle 3-06-00 tall by 2-00-00 wide will fit between the bottom chord and any other members.
10) All bearings are assumed to be SP No.2 .
11) Provide mechanical connection (by others) of truss to bearing plate capable of withstanding 173 lb uplift at joint 2, 173 lb uplift at joint 10, 78 lb uplift at joint 15, 26 lb uplift at joint 16, 78 lb uplift at joint 13, 27 lb uplift at joint 12, 173 lb uplift at joint 2 and 173 lb uplift at joint 10.

LOAD CASE(S) Standard

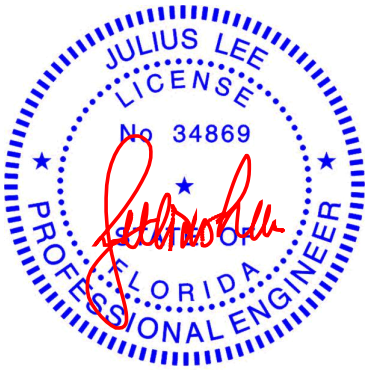

Julius Lee PE No. 34869
MiTek Inc. DBA MiTek USA FL Cert 6634
16023 Swingley Ridge Rd. Chesterfield, MO 63017
Date:

June 23,2025

WARNING - Verify design parameters and READ NOTES ON THIS AND INCLUDED MITEK REFERENCE PAGE MII-7473 rev. 1/2/2023 BEFORE USE.
Design valid for use only with MiTek® connectors. This design is based only upon parameters shown, and is for an individual building component, not a truss system. Before use, the building designer must verify the applicability of design parameters and properly incorporate this design into the overall building design. Bracing indicated is to prevent buckling of individual truss web and/or chord members only. Additional temporary and permanent bracing is always required for stability and to prevent collapse with possible personal injury and property damage. For general guidance regarding the fabrication, storage, delivery, erection and bracing of trusses and truss systems, see **ANSI/TPI1 Quality Criteria and DSB-22** available from Truss Plate Institute (www.tpinst.org) and **BCSI Building Component Safety Information** available from the Structural Building Component Association (www.sbcscomponents.com)

MiTek®
16023 Swingley Ridge Rd.
Chesterfield, MO 63017
314.434.1200 / MiTek-US.com

Job	Truss	Truss Type	Qty	Ply	Mitch Brown
250620-02KM	G01	Common Girder	1	**2**	T37696791 Job Reference (optional)

Coastal Truss & Vinyl Siding, Patterson, GA - 31577,

Run: 8.73 S Feb 19 2025 Print: 8.730 S Feb 19 2025 MiTek Industries, Inc. Fri Jun 20 12:42:42 Page: 1
ID:07GwQQiuf7kSqVHuTqm0BYz4Ock-RfC?PsB70Hq3NSgPqnL8w3uITXbGKWrCDoi7J4zJC?f

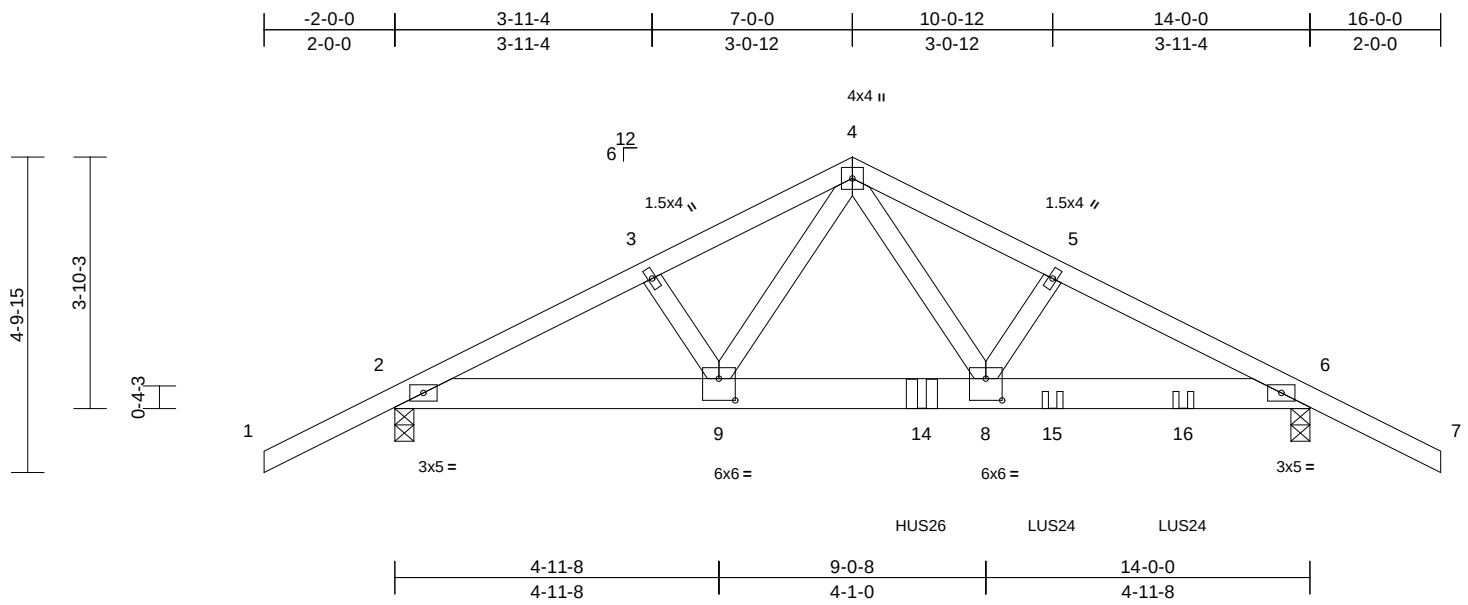

Scale = 1:35.2

Plate Offsets (X, Y): [8:0-3-0,0-4-0], [9:0-3-0,0-4-0]

Loading	(psf)	Spacing	2-0-0	CSI		DEFL	in	(loc)	l/defl	L/d	PLATES	GRIP
TCLL (roof)	20.0	Plate Grip DOL	1.25	TC	0.22	Vert(LL)	-0.05	8-9	>999	240	MT20	244/190
TCDL	7.0	Lumber DOL	1.25	BC	0.65	Vert(CT)	-0.09	8-9	>999	180		
BCLL	0.0*	Rep Stress Incr	NO	WB	0.29	Horz(CT)	0.02	6	n/a	n/a		
BCDL	7.0	Code	FBC2023/TPI2014	Matrix-MS							Weight: 159 lb	FT = 20%

LUMBER
TOP CHORD 2x4 SP No.2
BOT CHORD 2x6 SP No.2
WEBS 2x4 SP No.2

BRACING
TOP CHORD Structural wood sheathing directly applied or 6-0-0 oc purlins.
BOT CHORD Structural wood sheathing directly applied or 10-0-0 oc bracing.

REACTIONS (size) 2=0-3-8, 6=0-3-8
Max Horiz 2=115 (LC 7)
Max Uplift 2=-492 (LC 8), 6=-762 (LC 8)
Max Grav 2=1417 (LC 1), 6=2300 (LC 1)

FORCES (lb) - Maximum Compression/Maximum Tension
TOP CHORD 1-2=0/48, 2-3=-2687/778, 3-4=-2599/784, 4-5=-3820/1156, 5-6=-3968/1152, 6-7=0/48
BOT CHORD 2-9=-588/2366, 8-9=-479/2058, 6-8=-929/3480
WEBS 4-8=-774/2609, 5-8=-196/112, 4-9=-121/498, 3-9=-138/122

NOTES
1) 2-ply truss to be connected together with 10d (0.131"x3") nails as follows:
Top chords connected as follows: 2x4 - 1 row at 0-9-0 oc.
Bottom chords connected as follows: 2x6 - 2 rows staggered at 0-7-0 oc.
Web connected as follows: 2x4 - 1 row at 0-9-0 oc.
2) All loads are considered equally applied to all plies, except if noted as front (F) or back (B) face in the LOAD CASE(S) section. Ply to ply connections have been provided to distribute only loads noted as (F) or (B), unless otherwise indicated.
3) Unbalanced roof live loads have been considered for this design.
4) Wind: ASCE 7-22; Vult=130mph (3-second gust) Vasd=101mph; TCDL=4.2psf; BCDL=4.2psf; h=18ft; B=50ft; L=30ft; eave=4ft; Cat. II; Exp C; Enclosed; MWFRS (directional); cantilever left and right exposed ; end vertical left and right exposed; Lumber DOL=1.60 plate grip DOL=1.60
5) Building Designer / Project engineer responsible for verifying applied roof live load shown covers rain loading requirements specific to the use of this truss component.
6) This truss has been designed for a 10.0 psf bottom chord live load nonconcurrent with any other live loads.
7) * This truss has been designed for a live load of 20.0psf on the bottom chord in all areas where a rectangle 3-06-00 tall by 2-00-00 wide will fit between the bottom chord and any other members.
8) All bearings are assumed to be SP No.2 .
9) Provide mechanical connection (by others) of truss to bearing plate capable of withstanding 492 lb uplift at joint 2 and 762 lb uplift at joint 6.
10) Use Simpson Strong-Tie HUS26 (14-16d Girder, 4-16d Truss) or equivalent at 8-0-12 from the left end to connect truss(es) to back face of bottom chord.
11) Use Simpson Strong-Tie LUS24 (4-10d Girder, 2-10d Truss) or equivalent spaced at 2-0-0 oc max. starting at 10-0-12 from the left end to 12-0-12 to connect truss(es) to back face of bottom chord.
12) Fill all nail holes where hanger is in contact with lumber.

LOAD CASE(S) Standard
1) Dead + Roof Live (balanced): Lumber Increase=1.25, Plate Increase=1.25
Uniform Loads (lb/ft)
Vert: 1-4=-54, 4-7=-54, 2-6=-14
Concentrated Loads (lb)
Vert: 14=-1391 (B), 15=-579 (B), 16=-579 (B)

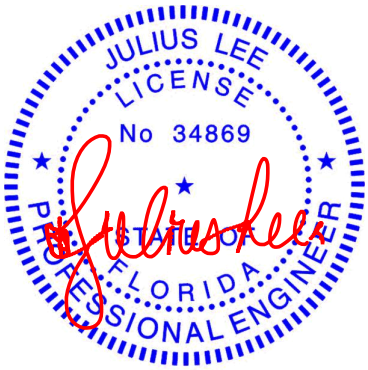

Julius Lee PE No. 34869
MiTek Inc. DBA MiTek USA FL Cert 6634
16023 Swingley Ridge Rd. Chesterfield, MO 63017

Date:

June 23,2025

WARNING - Verify design parameters and READ NOTES ON THIS AND INCLUDED MITEK REFERENCE PAGE MII-7473 rev. 1/2/2023 BEFORE USE.
Design valid for use only with MiTek® connectors. This design is based only upon parameters shown, and is for an individual building component, not a truss system. Before use, the building designer must verify the applicability of design parameters and properly incorporate this design into the overall building design. Bracing indicated is to prevent buckling of individual truss web and/or chord members only. Additional temporary and permanent bracing is always required for stability and to prevent collapse with possible personal injury and property damage. For general guidance regarding the fabrication, storage, delivery, erection and bracing of trusses and truss systems, see **ANSI/TPI1 Quality Criteria and DSB-22** available from Truss Plate Institute (www.tpinst.org) and **BCSI Building Component Safety Information** available from the Structural Building Component Association (www.sbcscomponents.com)

MiTek®
16023 Swingley Ridge Rd.
Chesterfield, MO 63017
314.434.1200 / MiTek-US.com

Job	Truss	Truss Type	Qty	Ply	Mitch Brown
250620-02KM	S01	Scissor	4	1	T37696792 Job Reference (optional)

Coastal Truss & Vinyl Siding, Patterson, GA - 31577,

Run: 8.73 S Feb 19 2025 Print: 8.730 S Feb 19 2025 MiTek Industries, Inc. Fri Jun 20 12:42:46 Page: 1
ID:ICf9K?ad02TtdzWztkagnRz4Ocu-RfC?PsB70Hq3NSgPqnL8w3uITXbGKWrCDoi7J4zJC?f

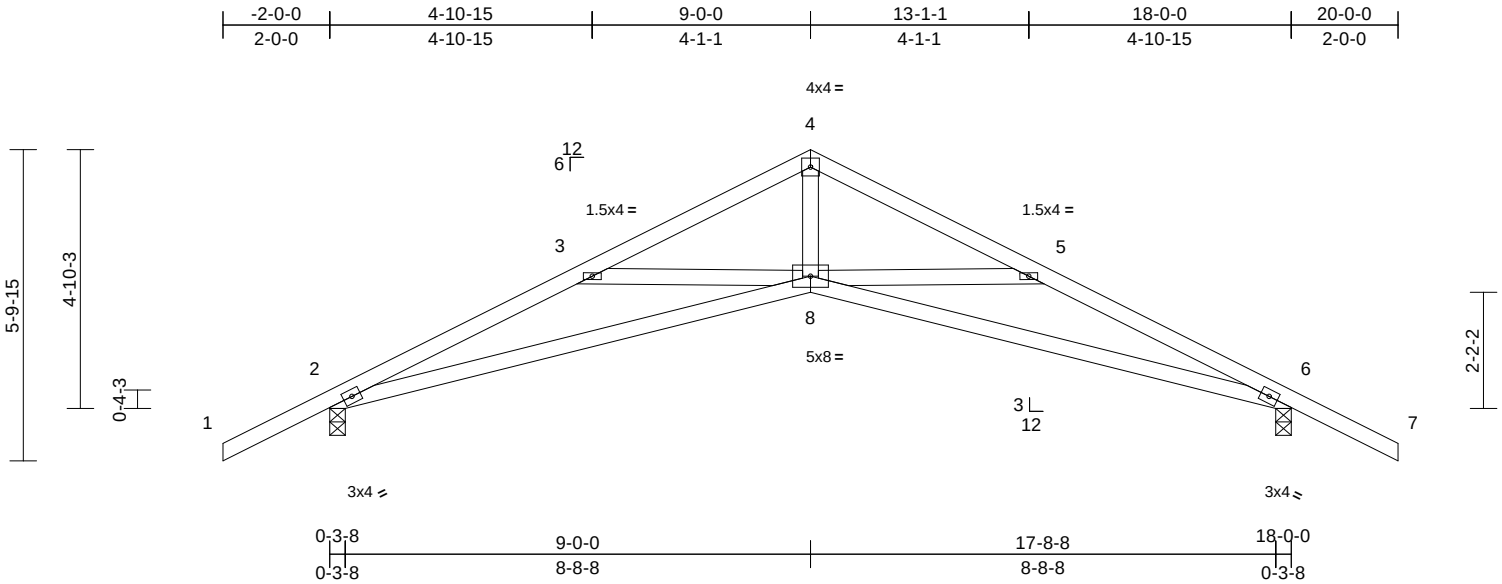

Scale = 1:43.1

Loading	(psf)	Spacing	2-0-0	CSI		DEFL	in	(loc)	l/defl	L/d	PLATES	GRIP
TCLL (roof)	20.0	Plate Grip DOL	1.25	TC	0.35	Vert(LL)	-0.16	8-14	>999	240	MT20	244/190
TCDL	7.0	Lumber DOL	1.25	BC	0.63	Vert(CT)	-0.30	8-14	>729	180		
BCLL	0.0*	Rep Stress Incr	YES	WB	0.21	Horz(CT)	0.13	6	n/a	n/a		
BCDL	7.0	Code	FBC2023/TPI2014	Matrix-MS							Weight: 80 lb	FT = 20%

LUMBER
TOP CHORD 2x4 SP No.2
BOT CHORD 2x4 SP No.2
WEBS 2x4 SP No.2

BRACING
TOP CHORD Structural wood sheathing directly applied or 4-3-5 oc purlins.
BOT CHORD Structural wood sheathing directly applied or 7-7-0 oc bracing.

REACTIONS (size) 2=0-3-8, 6=0-3-8
Max Horiz 2=-141 (LC 10)
Max Uplift 2=-276 (LC 12), 6=-276 (LC 12)
Max Grav 2=720 (LC 1), 6=720 (LC 1)

FORCES (lb) - Maximum Compression/Maximum Tension
TOP CHORD 1-2=0/48, 2-3=-1796/723, 3-4=-1350/456, 4-5=-1350/447, 5-6=-1796/758, 6-7=0/48
BOT CHORD 2-8=-528/1626, 6-8=-595/1626
WEBS 4-8=-207/917, 5-8=-452/373, 3-8=-443/376

NOTES
1) Unbalanced roof live loads have been considered for this design.
2) Wind: ASCE 7-22; Vult=130mph (3-second gust) Vasd=101mph; TCDL=4.2psf; BCDL=4.2psf; h=18ft; B=50ft; L=30ft; eave=4ft; Cat. II; Exp C; Enclosed; MWFRS (directional) and C-C Zone3 -2-0-0 to 0-9-15, Zone1 0-9-15 to 9-0-0, Zone2 9-0-0 to 13-4-14, Zone1 13-4-14 to 20-0-0 zone; cantilever left and right exposed ; end vertical left and right exposed;C-C for members and forces & MWFRS for reactions shown; Lumber DOL=1.60 plate grip DOL=1.60
3) Building Designer / Project engineer responsible for verifying applied roof live load shown covers rain loading requirements specific to the use of this truss component.
4) This truss has been designed for a 10.0 psf bottom chord live load nonconcurrent with any other live loads.
5) * This truss has been designed for a live load of 20.0psf on the bottom chord in all areas where a rectangle 3-06-00 tall by 2-00-00 wide will fit between the bottom chord and any other members.
6) All bearings are assumed to be SP No.2 .
7) Bearing at joint(s) 2, 6 considers parallel to grain value using ANSI/TPI 1 angle to grain formula. Building designer should verify capacity of bearing surface.
8) Provide mechanical connection (by others) of truss to bearing plate capable of withstanding 276 lb uplift at joint 2 and 276 lb uplift at joint 6.

LOAD CASE(S) Standard

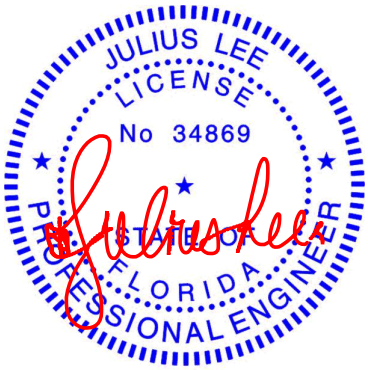

Julius Lee PE No. 34869
MiTek Inc. DBA MiTek USA FL Cert 6634
16023 Swingley Ridge Rd. Chesterfield, MO 63017

Date:

June 23,2025

WARNING - Verify design parameters and READ NOTES ON THIS AND INCLUDED MITEK REFERENCE PAGE MII-7473 rev. 1/2/2023 BEFORE USE.
Design valid for use only with MiTek® connectors. This design is based only upon parameters shown, and is for an individual building component, not a truss system. Before use, the building designer must verify the applicability of design parameters and properly incorporate this design into the overall building design. Bracing indicated is to prevent buckling of individual truss web and/or chord members only. Additional temporary and permanent bracing is always required for stability and to prevent collapse with possible personal injury and property damage. For general guidance regarding the fabrication, storage, delivery, erection and bracing of trusses and truss systems, see **ANSI/TPI1 Quality Criteria and DSB-22** available from Truss Plate Institute (www.tpinst.org) and **BCSI Building Component Safety Information** available from the Structural Building Component Association (www.sbcscomponents.com)

MiTek®
16023 Swingley Ridge Rd.
Chesterfield, MO 63017
314.434.1200 / MiTek-US.com

Job	Truss	Truss Type	Qty	Ply	Mitch Brown
250620-02KM	S02	Scissor	10	1	T37696793 Job Reference (optional)

Coastal Truss & Vinyl Siding, Patterson, GA - 31577,

Run: 8.73 S Feb 19 2025 Print: 8.730 S Feb 19 2025 MiTek Industries, Inc. Fri Jun 20 12:42:46 Page: 1
ID:nPDXXLbFnMbkF759RR5vKez4Oct-RfC?PsB70Hq3NSgPqnL8w3uITXbGKWrCDoi7J4zJC?f

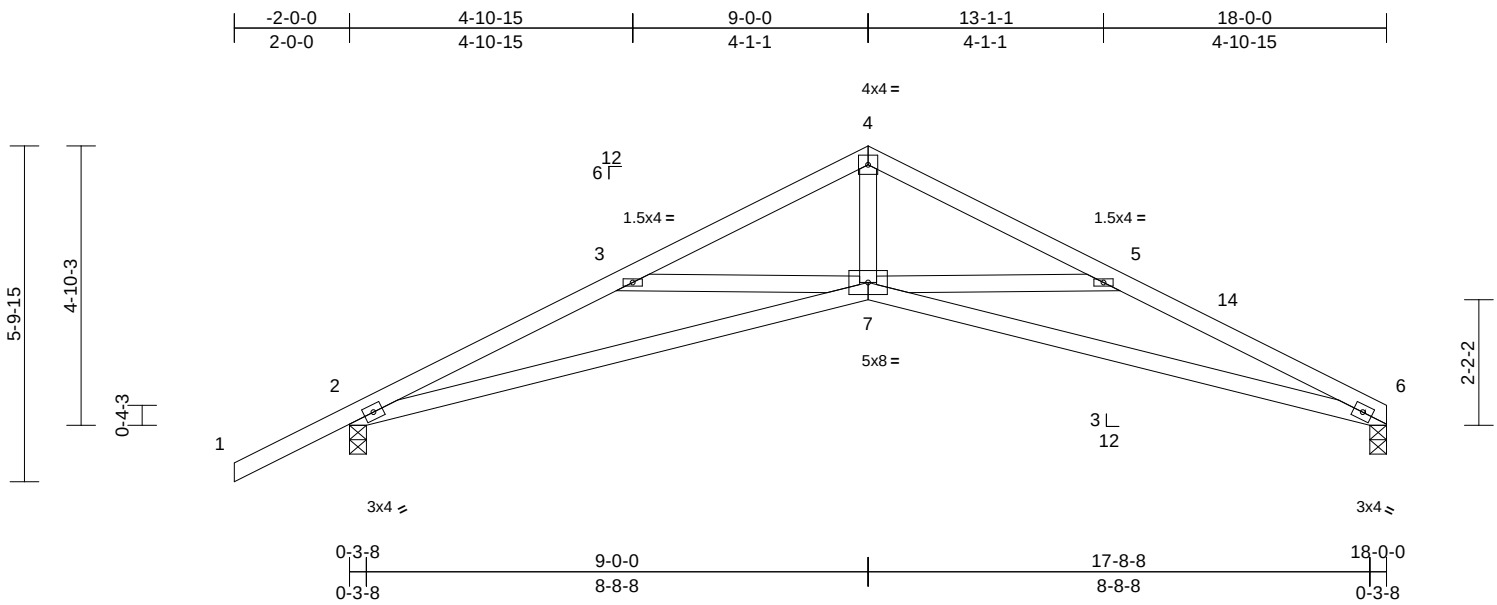

Scale = 1:40

Loading	(psf)	Spacing	2-0-0	CSI		DEFL	in	(loc)	l/defl	L/d	PLATES	GRIP
TCLL (roof)	20.0	Plate Grip DOL	1.25	TC	0.36	Vert(LL)	-0.16	7-10	>999	240	MT20	244/190
TCDL	7.0	Lumber DOL	1.25	BC	0.64	Vert(CT)	-0.30	7-10	>712	180		
BCLL	0.0*	Rep Stress Incr	YES	WB	0.21	Horz(CT)	0.14	6	n/a	n/a		
BCDL	7.0	Code	FBC2023/TPI2014	Matrix-MS							Weight: 77 lb	FT = 20%

LUMBER
TOP CHORD 2x4 SP No.2
BOT CHORD 2x4 SP No.2
WEBS 2x4 SP No.2

BRACING
TOP CHORD Structural wood sheathing directly applied or 4-1-7 oc purlins.
BOT CHORD Structural wood sheathing directly applied or 6-9-10 oc bracing.

REACTIONS (size) 2=0-3-8, 6=0-3-8
Max Horiz 2=135 (LC 11)
Max Uplift 2=-283 (LC 12), 6=-174 (LC 12)
Max Grav 2=726 (LC 1), 6=606 (LC 1)

FORCES (lb) - Maximum Compression/Maximum Tension
TOP CHORD 1-2=0/48, 2-3=-1821/855, 3-4=-1376/550, 4-5=-1378/564, 5-6=-1855/882
BOT CHORD 2-7=-717/1649, 6-7=-733/1698
WEBS 4-7=-310/945, 5-7=-493/399, 3-7=-443/367

NOTES
1) Unbalanced roof live loads have been considered for this design.
2) Wind: ASCE 7-22; Vult=130mph (3-second gust) Vasd=101mph; TCDL=4.2psf; BCDL=4.2psf; h=18ft; B=50ft; L=30ft; eave=4ft; Cat. II; Exp C; Enclosed; MWFRS (directional) and C-C Zone3 -2-0-0 to 0-9-15, Zone1 0-9-15 to 9-0-0, Zone2 9-0-0 to 13-4-14, Zone1 13-4-14 to 18-0-0 zone; cantilever left and right exposed ; end vertical left and right exposed;C-C for members and forces & MWFRS for reactions shown; Lumber DOL=1.60 plate grip DOL=1.60
3) Building Designer / Project engineer responsible for verifying applied roof live load shown covers rain loading requirements specific to the use of this truss component.
4) This truss has been designed for a 10.0 psf bottom chord live load nonconcurrent with any other live loads.
5) * This truss has been designed for a live load of 20.0psf on the bottom chord in all areas where a rectangle 3-06-00 tall by 2-00-00 wide will fit between the bottom chord and any other members.
6) All bearings are assumed to be SP No.2 .
7) Bearing at joint(s) 6, 2 considers parallel to grain value using ANSI/TPI 1 angle to grain formula. Building designer should verify capacity of bearing surface.
8) Provide mechanical connection (by others) of truss to bearing plate capable of withstanding 174 lb uplift at joint 6 and 283 lb uplift at joint 2.

LOAD CASE(S) Standard

Julius Lee PE No. 34869
MiTek Inc. DBA MiTek USA FL Cert 6634
16023 Swingley Ridge Rd. Chesterfield, MO 63017

Date:

June 23,2025

WARNING - Verify design parameters and READ NOTES ON THIS AND INCLUDED MITEK REFERENCE PAGE MII-7473 rev. 1/2/2023 BEFORE USE.
Design valid for use only with MiTek® connectors. This design is based only upon parameters shown, and is for an individual building component, not a truss system. Before use, the building designer must verify the applicability of design parameters and properly incorporate this design into the overall building design. Bracing indicated is to prevent buckling of individual truss web and/or chord members only. Additional temporary and permanent bracing is always required for stability and to prevent collapse with possible personal injury and property damage. For general guidance regarding the fabrication, storage, delivery, erection and bracing of trusses and truss systems, see **ANSI/TPI1 Quality Criteria and DSB-22** available from Truss Plate Institute (www.tpinst.org) and **BCSI Building Component Safety Information** available from the Structural Building Component Association (www.sbcscomponents.com)

MiTek®
16023 Swingley Ridge Rd.
Chesterfield, MO 63017
314.434.1200 / MiTek-US.com

Job	Truss	Truss Type	Qty	Ply	Mitch Brown
250620-02KM	H02	Half Hip Girder	1	1	T37696794 Job Reference (optional)

Coastal Truss & Vinyl Siding, Patterson, GA - 31577,

Run: 8.73 S Feb 19 2025 Print: 8.730 S Feb 19 2025 MiTek Industries, Inc. Fri Jun 20 12:42:43 Page: 1
ID:07GwQQiuf7kSqVHuTqm0BYz4Ock-RfC?PsB70Hq3NSgPqnL8w3uITXbGKWrCDoi7J4zJC?f

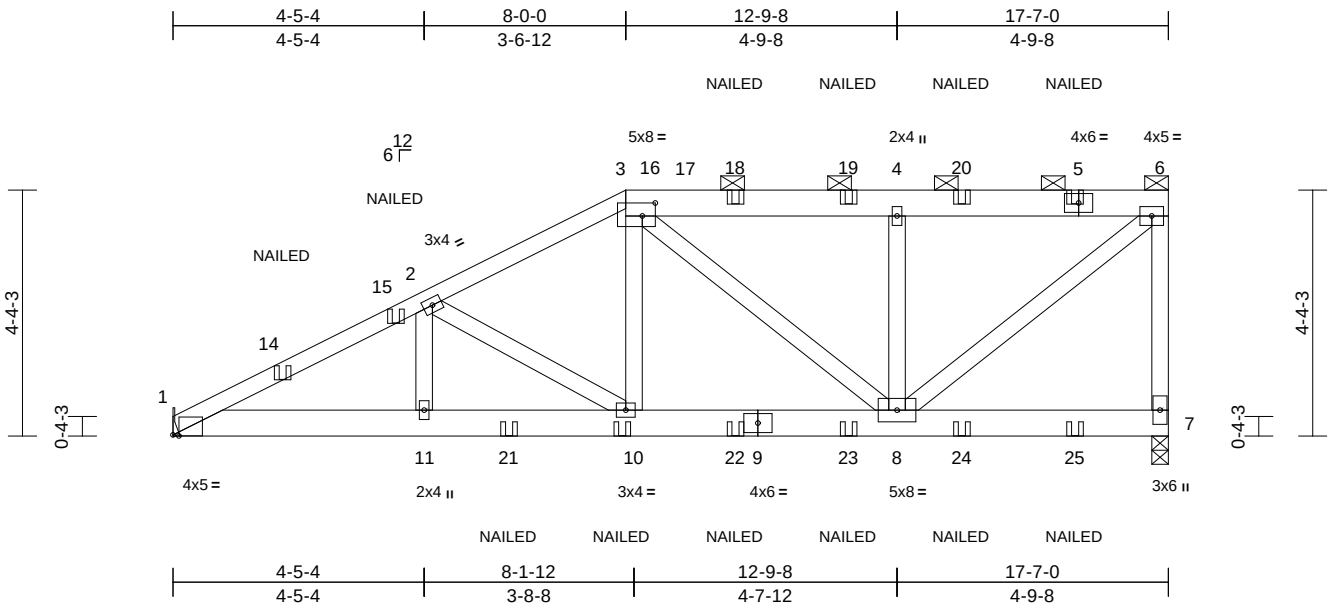

Scale = 1:40.7

Plate Offsets (X, Y): [1:0-1-4,0-0-3], [3:0-2-12,0-2-12]

Loading	(psf)	Spacing	2-0-0	CSI		DEFL	in	(loc)	l/defl	L/d	PLATES	GRIP
TCLL (roof)	20.0	Plate Grip DOL	1.25	TC	0.48	Vert(LL)	-0.06	10-11	>999	240	MT20	244/190
TCDL	7.0	Lumber DOL	1.25	BC	0.72	Vert(CT)	-0.11	10-11	>999	180		
BCLL	0.0*	Rep Stress Incr	NO	WB	0.40	Horz(CT)	0.03	7	n/a	n/a		
BCDL	7.0	Code	FBC2023/TPI2014	Matrix-MS							Weight: 117 lb	FT = 20%

LUMBER
TOP CHORD 2x6 SP No.2 *Except* 1-3:2x4 SP No.2
BOT CHORD 2x6 SP No.2
WEBS 2x4 SP No.2

BRACING
TOP CHORD Structural wood sheathing directly applied or 3-1-10 oc purlins, except end verticals, and 2-0-0 oc purlins (6-0-0 max.): 3-6.
BOT CHORD Structural wood sheathing directly applied or 8-3-2 oc bracing.

REACTIONS (size) 1= Mechanical, 7=0-3-8
Max Horiz 1=181 (LC 7)
Max Uplift 1=-419 (LC 8), 7=-511 (LC 5)
Max Grav 1=1405 (LC 1), 7=1411 (LC 13)

FORCES (lb) - Maximum Compression/Maximum Tension
TOP CHORD 1-2=-2719/829, 2-3=-1907/666, 3-4=-1366/541, 4-6=-1364/539, 6-7=-1258/487
BOT CHORD 1-11=-781/2364, 10-11=-781/2364, 8-10=-618/1727, 7-8=-54/69
WEBS 2-11=-40/281, 2-10=-778/244, 3-10=-248/937, 3-8=-440/115, 4-8=-388/274, 6-8=-632/1766

NOTES
1) Unbalanced roof live loads have been considered for this design.
2) Wind: ASCE 7-22; Vult=130mph (3-second gust) Vasd=101mph; TCDL=4.2psf; BCDL=4.2psf; h=18ft; B=50ft; L=30ft; eave=4ft; Cat. II; Exp C; Enclosed; MWFRS (directional); cantilever left and right exposed ; end vertical left and right exposed; Lumber DOL=1.60 plate grip DOL=1.60
3) Building Designer / Project engineer responsible for verifying applied roof live load shown covers rain loading requirements specific to the use of this truss component.
4) Provide adequate drainage to prevent water ponding.
5) This truss has been designed for a 10.0 psf bottom chord live load nonconcurrent with any other live loads.
6) * This truss has been designed for a live load of 20.0psf on the bottom chord in all areas where a rectangle 3-06-00 tall by 2-00-00 wide will fit between the bottom chord and any other members.
7) Bearings are assumed to be: , Joint 7 SP No.2 .
8) Refer to girder(s) for truss to truss connections.
9) Provide mechanical connection (by others) of truss to bearing plate capable of withstanding 419 lb uplift at joint 1 and 511 lb uplift at joint 7.
10) Graphical purlin representation does not depict the size or the orientation of the purlin along the top and/or bottom chord.
11) "NAILED" indicates 3-10d (0.148"x3") or 3-12d (0.148"x3.25") toe-nails per NDS guidlines.
12) In the LOAD CASE(S) section, loads applied to the face of the truss are noted as front (F) or back (B).

LOAD CASE(S) Standard
1) Dead + Roof Live (balanced): Lumber Increase=1.25, Plate Increase=1.25
Uniform Loads (lb/ft)
Vert: 1-3=-54, 3-6=-54, 1-7=-14
Concentrated Loads (lb)
Vert: 5=-29 (B), 10=-239 (B), 14=-199 (B), 15=-199 (B), 18=-29 (B), 19=-29 (B), 20=-29 (B), 21=-239 (B), 22=-159 (B), 23=-159 (B), 24=-159 (B), 25=-159 (B)

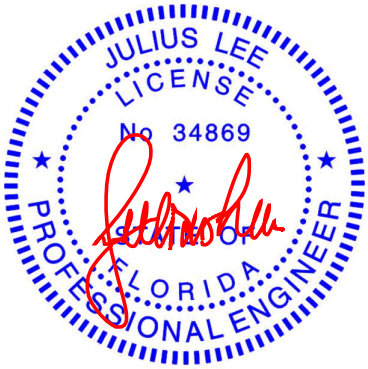

Julius Lee PE No. 34869
MiTek Inc. DBA MiTek USA FL Cert 6634
16023 Swingley Ridge Rd. Chesterfield, MO 63017

Date:

June 23,2025

WARNING - Verify design parameters and READ NOTES ON THIS AND INCLUDED MITEK REFERENCE PAGE MII-7473 rev. 1/2/2023 BEFORE USE.
Design valid for use only with MiTek® connectors. This design is based only upon parameters shown, and is for an individual building component, not a truss system. Before use, the building designer must verify the applicability of design parameters and properly incorporate this design into the overall building design. Bracing indicated is to prevent buckling of individual truss web and/or chord members only. Additional temporary and permanent bracing is always required for stability and to prevent collapse with possible personal injury and property damage. For general guidance regarding the fabrication, storage, delivery, erection and bracing of trusses and truss systems, see **ANSI/TPI1 Quality Criteria and DSB-22** available from Truss Plate Institute (www.tpinst.org) and **BCSI Building Component Safety Information** available from the Structural Building Component Association (www.sbcscomponents.com)

MiTek®
16023 Swingley Ridge Rd.
Chesterfield, MO 63017
314.434.1200 / MiTek-US.com

Job	Truss	Truss Type	Qty	Ply	Mitch Brown
250620-02KM	H03	Half Hip	1	1	T37696795 Job Reference (optional)

Coastal Truss & Vinyl Siding, Patterson, GA - 31577,

Run: 8.73 S Feb 19 2025 Print: 8.730 S Feb 19 2025 MiTek Industries, Inc. Fri Jun 20 12:42:43 Page: 1
ID:QRQeUdX6ypzR8LDCeuWkdbz4Ocy-RfC?PsB70Hq3NSgPqnL8w3uITXbGKWrCDoi7J4zJC?f

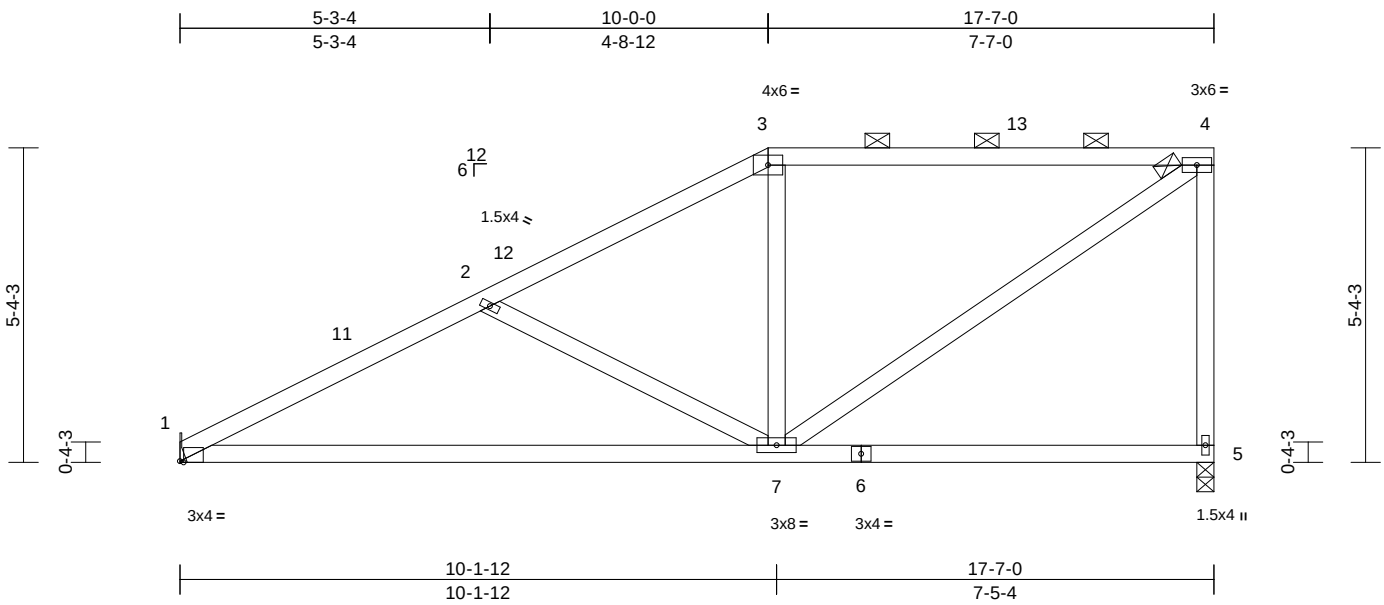

Scale = 1:39.2

Plate Offsets (X, Y): [1:0-0-12,Edge]

Loading	(psf)	Spacing	2-0-0	CSI		DEFL	in	(loc)	l/defl	L/d	PLATES	GRIP
TCLL (roof)	20.0	Plate Grip DOL	1.25	TC	0.79	Vert(LL)	-0.19	7-10	>999	240	MT20	244/190
TCDL	7.0	Lumber DOL	1.25	BC	0.67	Vert(CT)	-0.35	7-10	>602	180		
BCLL	0.0*	Rep Stress Incr	YES	WB	0.41	Horz(CT)	0.01	5	n/a	n/a		
BCDL	7.0	Code	FBC2023/TPI2014	Matrix-MS							Weight: 89 lb	FT = 20%

LUMBER
TOP CHORD 2x4 SP No.2
BOT CHORD 2x4 SP No.2
WEBS 2x4 SP No.2

BRACING
TOP CHORD Structural wood sheathing directly applied or 5-4-14 oc purlins, except end verticals, and 2-0-0 oc purlins (4-10-5 max.): 3-4.
BOT CHORD Structural wood sheathing directly applied or 7-10-1 oc bracing.

REACTIONS (size) 1= Mechanical, 5=0-3-8
Max Horiz 1=234 (LC 11)
Max Uplift 1=-170 (LC 12), 5=-196 (LC 9)
Max Grav 1=593 (LC 1), 5=593 (LC 1)

FORCES (lb) - Maximum Compression/Maximum Tension
TOP CHORD 1-2=-964/402, 2-3=-666/291, 3-4=-540/297, 4-5=-554/298
BOT CHORD 1-7=-556/860, 5-7=-99/113
WEBS 2-7=-357/233, 3-7=-64/150, 4-7=-305/624

NOTES
1) Unbalanced roof live loads have been considered for this design.
2) Wind: ASCE 7-22; Vult=130mph (3-second gust) Vasd=101mph; TCDL=4.2psf; BCDL=4.2psf; h=18ft; B=50ft; L=30ft; eave=4ft; Cat. II; Exp C; Enclosed; MWFRS (directional) and C-C Zone3 0-0-0 to 3-0-0, Zone1 3-0-0 to 10-0-0, Zone2 10-0-0 to 14-2-15, Zone1 14-2-15 to 17-5-4 zone; cantilever left and right exposed ; end vertical left and right exposed;C-C for members and forces & MWFRS for reactions shown; Lumber DOL=1.60 plate grip DOL=1.60
3) Building Designer / Project engineer responsible for verifying applied roof live load shown covers rain loading requirements specific to the use of this truss component.
4) Provide adequate drainage to prevent water ponding.
5) This truss has been designed for a 10.0 psf bottom chord live load nonconcurrent with any other live loads.
6) * This truss has been designed for a live load of 20.0psf on the bottom chord in all areas where a rectangle 3-06-00 tall by 2-00-00 wide will fit between the bottom chord and any other members.
7) Bearings are assumed to be: , Joint 5 SP No.2 .
8) Refer to girder(s) for truss to truss connections.
9) Provide mechanical connection (by others) of truss to bearing plate capable of withstanding 170 lb uplift at joint 1 and 196 lb uplift at joint 5.
10) Graphical purlin representation does not depict the size or the orientation of the purlin along the top and/or bottom chord.

LOAD CASE(S) Standard

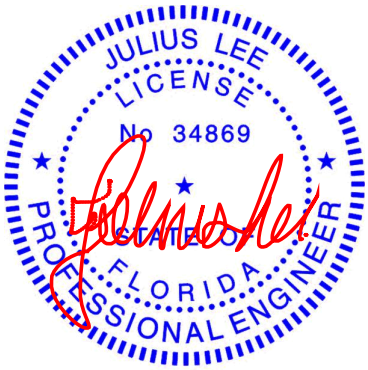

Julius Lee PE No. 34869
MiTek Inc. DBA MiTek USA FL Cert 6634
16023 Swingley Ridge Rd. Chesterfield, MO 63017
Date:

June 23,2025

WARNING - Verify design parameters and READ NOTES ON THIS AND INCLUDED MITEK REFERENCE PAGE MII-7473 rev. 1/2/2023 BEFORE USE.
Design valid for use only with MiTek® connectors. This design is based only upon parameters shown, and is for an individual building component, not a truss system. Before use, the building designer must verify the applicability of design parameters and properly incorporate this design into the overall building design. Bracing indicated is to prevent buckling of individual truss web and/or chord members only. Additional temporary and permanent bracing is always required for stability and to prevent collapse with possible personal injury and property damage. For general guidance regarding the fabrication, storage, delivery, erection and bracing of trusses and truss systems, see **ANSI/TPI1 Quality Criteria and DSB-22** available from Truss Plate Institute (www.tpinst.org) and **BCSI Building Component Safety Information** available from the Structural Building Component Association (www.sbcscomponents.com)

MiTek®
16023 Swingley Ridge Rd.
Chesterfield, MO 63017
314.434.1200 / MiTek-US.com

Job	Truss	Truss Type	Qty	Ply	Mitch Brown
250620-02KM	H04	Half Hip	1	1	T37696796 Job Reference (optional)

Coastal Truss & Vinyl Siding, Patterson, GA - 31577,

Run: 8.73 S Feb 19 2025 Print: 8.730 S Feb 19 2025 MiTek Industries, Inc. Fri Jun 20 12:42:43 Page: 1
ID:ud_0hzYkj75ImVoOCb1z9oz4Ocx-RfC?PsB70Hq3NSgPqnL8w3uITXbGKWrCDoi7J4zJC?f

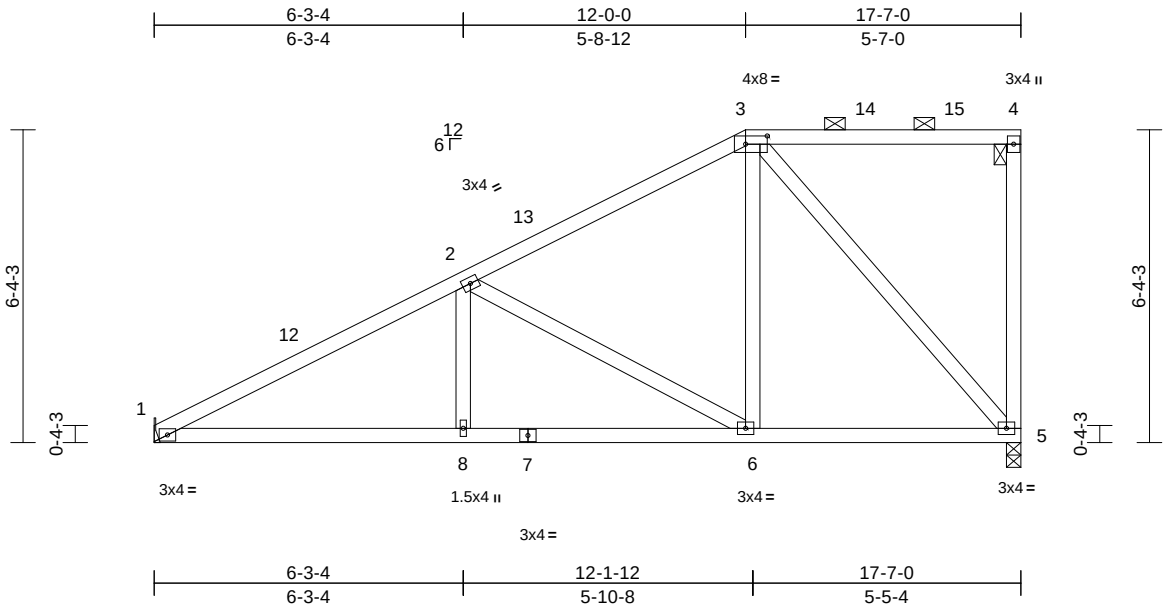

Scale = 1:46.7

Plate Offsets (X, Y): [3:0-5-4,0-2-0]

Loading	(psf)	Spacing	2-0-0	CSI		DEFL	in	(loc)	l/defl	L/d	PLATES	GRIP
TCLL (roof)	20.0	Plate Grip DOL	1.25	TC	0.37	Vert(LL)	0.05	8-11	>999	240	MT20	244/190
TCDL	7.0	Lumber DOL	1.25	BC	0.39	Vert(CT)	-0.09	8-11	>999	180		
BCLL	0.0*	Rep Stress Incr	YES	WB	0.62	Horz(CT)	0.02	5	n/a	n/a		
BCDL	7.0	Code	FBC2023/TPI2014	Matrix-MS							Weight: 97 lb	FT = 20%

LUMBER
TOP CHORD 2x4 SP No.2
BOT CHORD 2x4 SP No.2
WEBS 2x4 SP No.2

BRACING
TOP CHORD Structural wood sheathing directly applied or 5-6-6 oc purlins, except end verticals, and 2-0-0 oc purlins (6-0-0 max.): 3-4.
BOT CHORD Structural wood sheathing directly applied or 7-11-0 oc bracing.

REACTIONS (size) 1= Mechanical, 5=0-3-8
Max Horiz 1=280 (LC 11)
Max Uplift 1=-168 (LC 12), 5=-195 (LC 9)
Max Grav 1=593 (LC 1), 5=593 (LC 1)

FORCES (lb) - Maximum Compression/Maximum Tension
TOP CHORD 1-2=-971/368, 2-3=-501/261, 3-4=-144/154, 4-5=-145/101
BOT CHORD 1-8=-535/865, 6-8=-535/865, 5-6=-305/424
WEBS 2-8=0/219, 2-6=-531/263, 3-6=-79/369, 3-5=-563/307

NOTES
1) Unbalanced roof live loads have been considered for this design.
2) Wind: ASCE 7-22; Vult=130mph (3-second gust) Vasd=101mph; TCDL=4.2psf; BCDL=4.2psf; h=18ft; B=50ft; L=30ft; eave=4ft; Cat. II; Exp C; Enclosed; MWFRS (directional) and C-C Zone3 0-0-0 to 3-0-0, Zone1 3-0-0 to 12-0-0, Zone2 12-0-0 to 16-2-15, Zone1 16-2-15 to 17-5-4 zone; cantilever left and right exposed ; end vertical left and right exposed;C-C for members and forces & MWFRS for reactions shown; Lumber DOL=1.60 plate grip DOL=1.60
3) Building Designer / Project engineer responsible for verifying applied roof live load shown covers rain loading requirements specific to the use of this truss component.
4) Provide adequate drainage to prevent water ponding.
5) This truss has been designed for a 10.0 psf bottom chord live load nonconcurrent with any other live loads.
6) * This truss has been designed for a live load of 20.0psf on the bottom chord in all areas where a rectangle 3-06-00 tall by 2-00-00 wide will fit between the bottom chord and any other members.
7) Bearings are assumed to be: , Joint 5 SP No.2 .
8) Refer to girder(s) for truss to truss connections.
9) Provide mechanical connection (by others) of truss to bearing plate capable of withstanding 168 lb uplift at joint 1 and 195 lb uplift at joint 5.
10) Graphical purlin representation does not depict the size or the orientation of the purlin along the top and/or bottom chord.

LOAD CASE(S) Standard

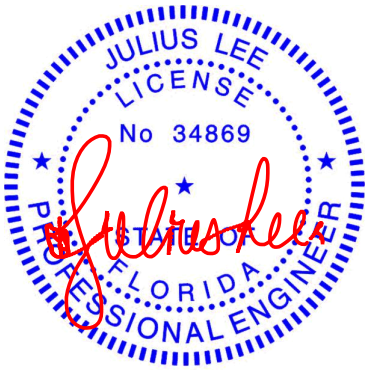

Julius Lee PE No. 34869
MiTek Inc. DBA MiTek USA FL Cert 6634
16023 Swingley Ridge Rd. Chesterfield, MO 63017
Date:

June 23,2025

WARNING - Verify design parameters and READ NOTES ON THIS AND INCLUDED MITEK REFERENCE PAGE MII-7473 rev. 1/2/2023 BEFORE USE.
Design valid for use only with MiTek® connectors. This design is based only upon parameters shown, and is for an individual building component, not a truss system. Before use, the building designer must verify the applicability of design parameters and properly incorporate this design into the overall building design. Bracing indicated is to prevent buckling of individual truss web and/or chord members only. Additional temporary and permanent bracing is always required for stability and to prevent collapse with possible personal injury and property damage. For general guidance regarding the fabrication, storage, delivery, erection and bracing of trusses and truss systems, see **ANSI/TPI1 Quality Criteria and DSB-22** available from Truss Plate Institute (www.tpinst.org) and **BCSI Building Component Safety Information** available from the Structural Building Component Association (www.sbcscomponents.com)

MiTek®
16023 Swingley Ridge Rd.
Chesterfield, MO 63017
314.434.1200 / MiTek-US.com

Job	Truss	Truss Type	Qty	Ply	Mitch Brown
250620-02KM	H05	Half Hip	1	1	T37696797 Job Reference (optional)

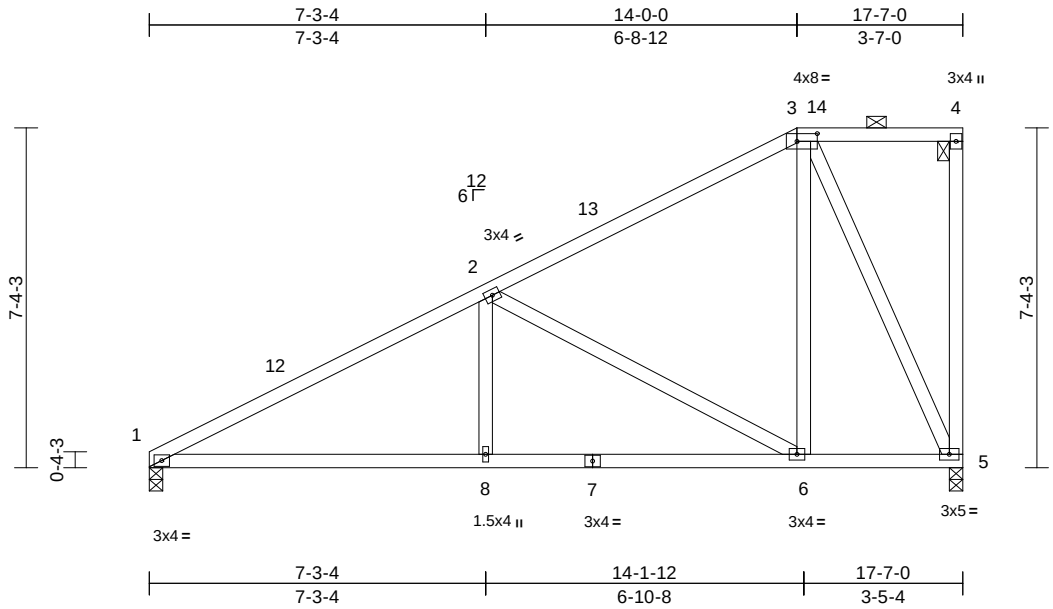

Scale = 1:49.8

Plate Offsets (X, Y): [3:0-5-4,0-2-0]

Loading	(psf)	Spacing	2-0-0	CSI		DEFL	in	(loc)	l/defl	L/d	PLATES	GRIP
TCLL (roof)	20.0	Plate Grip DOL	1.25	TC	0.53	Vert(LL)	0.08	8-11	>999	240	MT20	244/190
TCDL	7.0	Lumber DOL	1.25	BC	0.46	Vert(CT)	-0.14	8-11	>999	180		
BCLL	0.0*	Rep Stress Incr	YES	WB	0.67	Horz(CT)	0.02	5	n/a	n/a		
BCDL	7.0	Code	FBC2023/TPI2014	Matrix-MS							Weight: 102 lb	FT = 20%

LUMBER
TOP CHORD 2x4 SP No.2
BOT CHORD 2x4 SP No.2
WEBS 2x4 SP No.2

BRACING
TOP CHORD Structural wood sheathing directly applied or 5-5-3 oc purlins, except end verticals, and 2-0-0 oc purlins (6-0-0 max.): 3-4.
BOT CHORD Structural wood sheathing directly applied or 7-11-7 oc bracing.

REACTIONS (size) 1=0-3-8, 5=0-3-8
Max Horiz 1=327 (LC 11)
Max Uplift 1=-165 (LC 12), 5=-193 (LC 9)
Max Grav 1=593 (LC 1), 5=593 (LC 1)

FORCES (lb) - Maximum Compression/Maximum Tension
TOP CHORD 1-2=-927/351, 2-3=-365/225, 3-4=-158/172, 4-5=-81/80
BOT CHORD 1-8=-518/831, 6-8=-518/831, 5-6=-250/328
WEBS 2-8=0/267, 2-6=-637/305, 3-6=-120/390, 3-5=-569/321

NOTES
1) Wind: ASCE 7-22; Vult=130mph (3-second gust) Vasd=101mph; TCDL=4.2psf; BCDL=4.2psf; h=18ft; B=50ft; L=30ft; eave=4ft; Cat. II; Exp C; Enclosed; MWFRS (directional) and C-C Zone3 0-0-0 to 3-0-0, Zone1 3-0-0 to 14-0-0, Zone3 14-0-0 to 17-5-4 zone; cantilever left and right exposed ; end vertical left and right exposed;C-C for members and forces & MWFRS for reactions shown; Lumber DOL=1.60 plate grip DOL=1.60
2) Building Designer / Project engineer responsible for verifying applied roof live load shown covers rain loading requirements specific to the use of this truss component.
3) Provide adequate drainage to prevent water ponding.
4) This truss has been designed for a 10.0 psf bottom chord live load nonconcurrent with any other live loads.
5) * This truss has been designed for a live load of 20.0psf on the bottom chord in all areas where a rectangle 3-06-00 tall by 2-00-00 wide will fit between the bottom chord and any other members.
6) All bearings are assumed to be SP No.2 .
7) Provide mechanical connection (by others) of truss to bearing plate capable of withstanding 165 lb uplift at joint 1 and 193 lb uplift at joint 5.
8) Graphical purlin representation does not depict the size or the orientation of the purlin along the top and/or bottom chord.

LOAD CASE(S) Standard

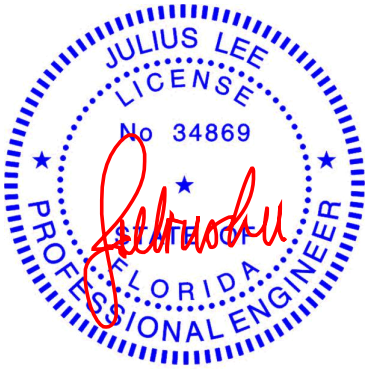

Julius Lee PE No. 34869
MiTek Inc. DBA MiTek USA FL Cert 6634
16023 Swingley Ridge Rd. Chesterfield, MO 63017
Date:

June 23,2025

WARNING - Verify design parameters and READ NOTES ON THIS AND INCLUDED MITEK REFERENCE PAGE MII-7473 rev. 1/2/2023 BEFORE USE.
Design valid for use only with MiTek® connectors. This design is based only upon parameters shown, and is for an individual building component, not a truss system. Before use, the building designer must verify the applicability of design parameters and properly incorporate this design into the overall building design. Bracing indicated is to prevent buckling of individual truss web and/or chord members only. Additional temporary and permanent bracing is always required for stability and to prevent collapse with possible personal injury and property damage. For general guidance regarding the fabrication, storage, delivery, erection and bracing of trusses and truss systems, see **ANSI/TPI1 Quality Criteria and DSB-22** available from Truss Plate Institute (www.tpinst.org) and **BCSI Building Component Safety Information** available from the Structural Building Component Association (www.sbcscomponents.com)

MiTek®
16023 Swingley Ridge Rd.
Chesterfield, MO 63017
314.434.1200 / MiTek-US.com

Job	Truss	Truss Type	Qty	Ply	Mitch Brown
250620-02KM	H06	Half Hip	1	1	T37696798 Job Reference (optional)

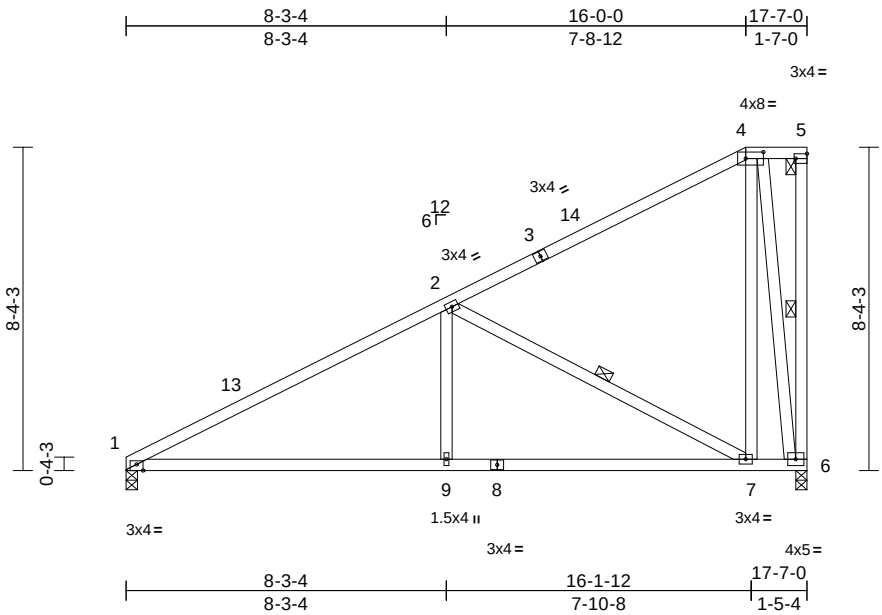

Scale = 1:59.5

Plate Offsets (X, Y): [1:0-2-0,Edge], [4:0-5-8,0-2-0], [5:Edge,0-1-8]

Loading	(psf)	Spacing	2-0-0	CSI		DEFL	in	(loc)	l/defl	L/d	PLATES	GRIP
TCLL (roof)	20.0	Plate Grip DOL	1.25	TC	0.71	Vert(LL)	0.13	9-12	>999	240	MT20	244/190
TCDL	7.0	Lumber DOL	1.25	BC	0.55	Vert(CT)	-0.22	9-12	>956	180		
BCLL	0.0*	Rep Stress Incr	YES	WB	0.75	Horz(CT)	0.02	6	n/a	n/a		
BCDL	7.0	Code	FBC2023/TPI2014	Matrix-MS							Weight: 109 lb	FT = 20%

LUMBER
TOP CHORD 2x4 SP No.2
BOT CHORD 2x4 SP No.2
WEBS 2x4 SP No.2

BRACING
TOP CHORD Structural wood sheathing directly applied or 5-2-5 oc purlins, except end verticals, and 2-0-0 oc purlins (6-0-0 max.): 4-5.
BOT CHORD Structural wood sheathing directly applied or 8-0-8 oc bracing.
WEBS 1 Row at midpt 5-6, 2-7

REACTIONS (size) 1=0-3-8, 6=0-3-8
Max Horiz 1=373 (LC 11)
Max Uplift 1=-162 (LC 12), 6=-192 (LC 9)
Max Grav 1=593 (LC 1), 6=608 (LC 17)

FORCES (lb) - Maximum Compression/Maximum Tension
TOP CHORD 1-2=-899/339, 2-4=-294/191, 4-5=-177/192, 5-6=-109/101
BOT CHORD 1-9=-489/788, 7-9=-489/788, 6-7=-182/230
WEBS 2-9=0/307, 2-7=-734/346, 4-7=-197/462, 4-6=-657/352

NOTES
1) Unbalanced roof live loads have been considered for this design.
2) Wind: ASCE 7-22; Vult=130mph (3-second gust) Vasd=101mph; TCDL=4.2psf; BCDL=4.2psf; h=18ft; B=50ft; L=30ft; eave=4ft; Cat. II; Exp C; Enclosed; MWFRS (directional) and C-C Zone3 0-0-0 to 3-0-0, Zone1 3-0-0 to 16-0-0, Zone3 16-0-0 to 17-5-4 zone; cantilever left and right exposed ; end vertical left and right exposed;C-C for members and forces & MWFRS for reactions shown; Lumber DOL=1.60 plate grip DOL=1.60
3) Building Designer / Project engineer responsible for verifying applied roof live load shown covers rain loading requirements specific to the use of this truss component.
4) Provide adequate drainage to prevent water ponding.
5) This truss has been designed for a 10.0 psf bottom chord live load nonconcurrent with any other live loads.
6) * This truss has been designed for a live load of 20.0psf on the bottom chord in all areas where a rectangle 3-06-00 tall by 2-00-00 wide will fit between the bottom chord and any other members.
7) All bearings are assumed to be SP No.2 .
8) Provide mechanical connection (by others) of truss to bearing plate capable of withstanding 192 lb uplift at joint 6 and 162 lb uplift at joint 1.
9) Graphical purlin representation does not depict the size or the orientation of the purlin along the top and/or bottom chord.

LOAD CASE(S) Standard

Julius Lee PE No. 34869
MiTek Inc. DBA MiTek USA FL Cert 6634
16023 Swingley Ridge Rd. Chesterfield, MO 63017
Date:

June 23,2025

WARNING - Verify design parameters and READ NOTES ON THIS AND INCLUDED MITEK REFERENCE PAGE MII-7473 rev. 1/2/2023 BEFORE USE.
Design valid for use only with MiTek® connectors. This design is based only upon parameters shown, and is for an individual building component, not a truss system. Before use, the building designer must verify the applicability of design parameters and properly incorporate this design into the overall building design. Bracing indicated is to prevent buckling of individual truss web and/or chord members only. Additional temporary and permanent bracing is always required for stability and to prevent collapse with possible personal injury and property damage. For general guidance regarding the fabrication, storage, delivery, erection and bracing of trusses and truss systems, see **ANSI/TPI1 Quality Criteria and DSB-22** available from Truss Plate Institute (www.tpinst.org) and **BCSI Building Component Safety Information** available from the Structural Building Component Association (www.sbcscomponents.com)

MiTek®
16023 Swingley Ridge Rd.
Chesterfield, MO 63017
314.434.1200 / MiTek-US.com

Job	Truss	Truss Type	Qty	Ply	Mitch Brown
250620-02KM	T01	Common	2	1	T37696799 Job Reference (optional)

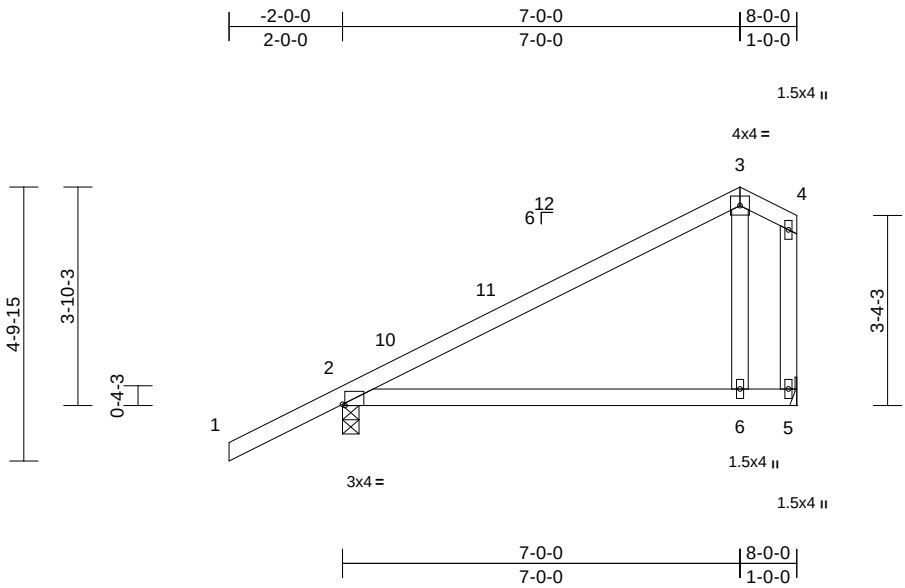

Scale = 1:40.6

Plate Offsets (X, Y): [2:0-0-8,Edge]

Loading	(psf)	Spacing	2-0-0	CSI		DEFL	in	(loc)	l/defl	L/d	PLATES	GRIP
TCLL (roof)	20.0	Plate Grip DOL	1.25	TC	0.81	Vert(LL)	0.33	6-9	>283	240	MT20	244/190
TCDL	7.0	Lumber DOL	1.25	BC	0.59	Vert(CT)	-0.35	6-9	>273	180		
BCLL	0.0*	Rep Stress Incr	YES	WB	0.06	Horz(CT)	-0.01	2	n/a	n/a		
BCDL	7.0	Code	FBC2023/TPI2014	Matrix-MP							Weight: 38 lb	FT = 20%

LUMBER
TOP CHORD 2x4 SP No.2
BOT CHORD 2x4 SP No.2
WEBS 2x4 SP No.2
OTHERS 2x4 SP No.2

BRACING
TOP CHORD Structural wood sheathing directly applied or 5-6-9 oc purlins.
BOT CHORD Structural wood sheathing directly applied or 10-0-0 oc bracing.

REACTIONS (size) 2=0-3-8, 5= Mechanical
Max Horiz 2=175 (LC 11)
Max Uplift 2=-186 (LC 12), 5=-67 (LC 12)
Max Grav 2=389 (LC 1), 5=253 (LC 1)

FORCES (lb) - Maximum Compression/Maximum Tension
TOP CHORD 1-2=0/48, 2-3=-348/118, 3-4=-89/113, 4-5=-57/90
BOT CHORD 2-6=-72/305, 5-6=-72/78
WEBS 3-6=-231/343

NOTES
1) Unbalanced roof live loads have been considered for this design.
2) Wind: ASCE 7-22; Vult=130mph (3-second gust) Vasd=101mph; TCDL=4.2psf; BCDL=4.2psf; h=18ft; B=50ft; L=30ft; eave=4ft; Cat. II; Exp C; Enclosed; MWFRS (directional) and C-C Zone3 -2-0-0 to 1-0-0, Zone1 1-0-0 to 7-0-0, Zone3 7-0-0 to 7-10-4 zone; cantilever left and right exposed ; end vertical left and right exposed;C-C for members and forces & MWFRS for reactions shown; Lumber DOL=1.60 plate grip DOL=1.60
3) Building Designer / Project engineer responsible for verifying applied roof live load shown covers rain loading requirements specific to the use of this truss component.
4) This truss has been designed for a 10.0 psf bottom chord live load nonconcurrent with any other live loads.
5) * This truss has been designed for a live load of 20.0psf on the bottom chord in all areas where a rectangle 3-06-00 tall by 2-00-00 wide will fit between the bottom chord and any other members.
6) Bearings are assumed to be: Joint 2 SP No.2 .
7) Refer to girder(s) for truss to truss connections.
8) Provide mechanical connection (by others) of truss to bearing plate capable of withstanding 186 lb uplift at joint 2 and 67 lb uplift at joint 5.

LOAD CASE(S) Standard

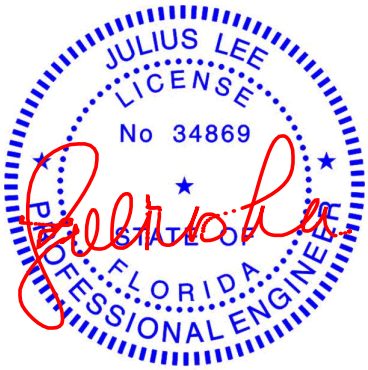

Julius Lee PE No. 34869
MiTek Inc. DBA MiTek USA FL Cert 6634
16023 Swingley Ridge Rd. Chesterfield, MO 63017
Date:

June 23,2025

WARNING - Verify design parameters and READ NOTES ON THIS AND INCLUDED MITEK REFERENCE PAGE MII-7473 rev. 1/2/2023 BEFORE USE.
Design valid for use only with MiTek® connectors. This design is based only upon parameters shown, and is for an individual building component, not a truss system. Before use, the building designer must verify the applicability of design parameters and properly incorporate this design into the overall building design. Bracing indicated is to prevent buckling of individual truss web and/or chord members only. Additional temporary and permanent bracing is always required for stability and to prevent collapse with possible personal injury and property damage. For general guidance regarding the fabrication, storage, delivery, erection and bracing of trusses and truss systems, see **ANSI/TPI1 Quality Criteria and DSB-22** available from Truss Plate Institute (www.tpinst.org) and **BCSI Building Component Safety Information** available from the Structural Building Component Association (www.sbcscomponents.com)

MiTek®
16023 Swingley Ridge Rd.
Chesterfield, MO 63017
314.434.1200 / MiTek-US.com

Job	Truss	Truss Type	Qty	Ply	Mitch Brown
250620-02KM	T02	Common	1	1	T37696800 Job Reference (optional)

Coastal Truss & Vinyl Siding, Patterson, GA - 31577,

Run: 8.73 S Feb 19 2025 Print: 8.730 S Feb 19 2025 MiTek Industries, Inc. Fri Jun 20 12:42:46 Page: 1
ID:FbnvkhctYfjbsGgL?9c8ssz4Ocs-RfC?PsB70Hq3NSgPqnL8w3uITXbGKWrCDoi7J4zJC?f

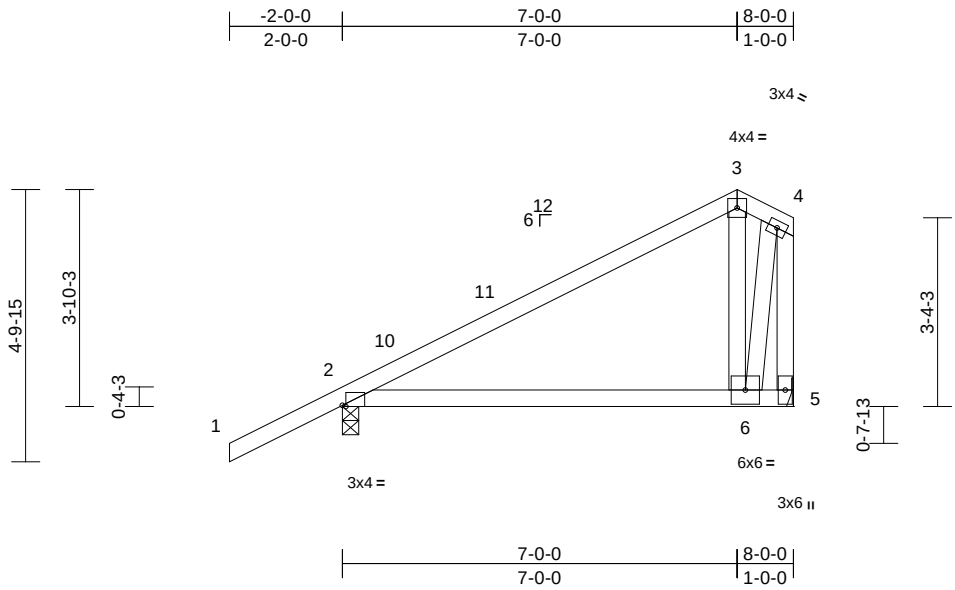

Scale = 1:40.9

Plate Offsets (X, Y): [2:0-0-12,Edge]

Loading	(psf)	Spacing	2-0-0	CSI		DEFL	in	(loc)	l/defl	L/d	PLATES	GRIP
TCLL (roof)	20.0	Plate Grip DOL	1.25	TC	0.72	Vert(LL)	0.11	6-9	>821	240	MT20	244/190
TCDL	7.0	Lumber DOL	1.25	BC	0.57	Vert(CT)	-0.12	6-9	>792	180		
BCLL	0.0*	Rep Stress Incr	YES	WB	0.09	Horz(CT)	0.00	2	n/a	n/a		
BCDL	7.0	Code	FBC2023/TPI2014	Matrix-MP							Weight: 43 lb	FT = 20%

LUMBER
TOP CHORD 2x4 SP No.2
BOT CHORD 2x4 SP No.2
WEBS 2x4 SP No.2

BRACING
TOP CHORD Structural wood sheathing directly applied or 6-0-0 oc purlins, except end verticals.
BOT CHORD Structural wood sheathing directly applied or 10-0-0 oc bracing.

REACTIONS (size) 2=0-3-8, 5= Mechanical
Max Horiz 2=175 (LC 11)
Max Uplift 2=-186 (LC 12), 5=-67 (LC 12)
Max Grav 2=389 (LC 1), 5=253 (LC 1)

FORCES (lb) - Maximum Compression/Maximum Tension
TOP CHORD 1-2=0/48, 2-3=-351/83, 3-4=-165/133, 4-5=-485/469
BOT CHORD 2-6=-150/302, 5-6=-72/78
WEBS 3-6=-112/234, 4-6=-407/452

NOTES
1) Unbalanced roof live loads have been considered for this design.
2) Wind: ASCE 7-22; Vult=130mph (3-second gust) Vasd=101mph; TCDL=4.2psf; BCDL=4.2psf; h=18ft; B=50ft; L=30ft; eave=4ft; Cat. II; Exp C; Enclosed; MWFRS (directional) and C-C Zone3 -2-0-0 to 1-0-0, Zone1 1-0-0 to 7-0-0, Zone3 7-0-0 to 7-10-4 zone; cantilever left and right exposed ; end vertical left and right exposed;C-C for members and forces & MWFRS for reactions shown; Lumber DOL=1.60 plate grip DOL=1.60
3) Building Designer / Project engineer responsible for verifying applied roof live load shown covers rain loading requirements specific to the use of this truss component.
4) This truss has been designed for a 10.0 psf bottom chord live load nonconcurrent with any other live loads.
5) * This truss has been designed for a live load of 20.0psf on the bottom chord in all areas where a rectangle 3-06-00 tall by 2-00-00 wide will fit between the bottom chord and any other members.
6) Bearings are assumed to be: Joint 2 SP No.2 .
7) Refer to girder(s) for truss to truss connections.
8) Provide mechanical connection (by others) of truss to bearing plate capable of withstanding 186 lb uplift at joint 2 and 67 lb uplift at joint 5.

LOAD CASE(S) Standard

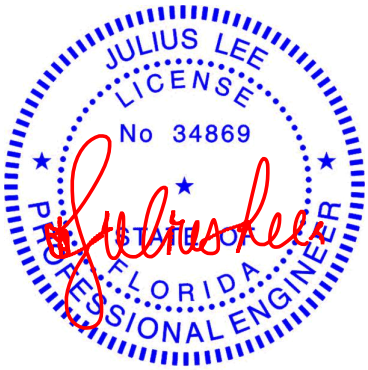

Julius Lee PE No. 34869
MiTek Inc. DBA MiTek USA FL Cert 6634
16023 Swingley Ridge Rd. Chesterfield, MO 63017
Date:

June 23,2025

WARNING - Verify design parameters and READ NOTES ON THIS AND INCLUDED MITEK REFERENCE PAGE MII-7473 rev. 1/2/2023 BEFORE USE.
Design valid for use only with MiTek® connectors. This design is based only upon parameters shown, and is for an individual building component, not a truss system. Before use, the building designer must verify the applicability of design parameters and properly incorporate this design into the overall building design. Bracing indicated is to prevent buckling of individual truss web and/or chord members only. Additional temporary and permanent bracing is always required for stability and to prevent collapse with possible personal injury and property damage. For general guidance regarding the fabrication, storage, delivery, erection and bracing of trusses and truss systems, see **ANSI/TPI1 Quality Criteria and DSB-22** available from Truss Plate Institute (www.tpinst.org) and **BCSI Building Component Safety Information** available from the Structural Building Component Association (www.sbcscomponents.com)

MiTek®
16023 Swingley Ridge Rd.
Chesterfield, MO 63017
314.434.1200 / MiTek-US.com

Job	Truss	Truss Type	Qty	Ply	Mitch Brown
250620-02KM	H07	Half Hip	1	1	T37696801 Job Reference (optional)

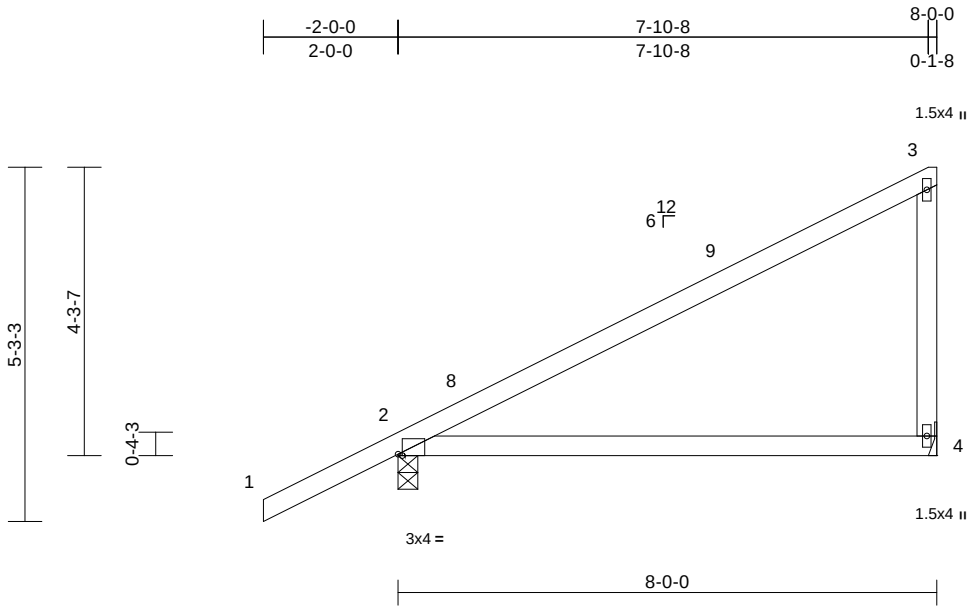

Scale = 1:34.2

Plate Offsets (X, Y): [2:0-0-12,Edge]

Loading	(psf)	Spacing	2-0-0	CSI		DEFL	in	(loc)	l/defl	L/d	PLATES	GRIP
TCLL (roof)	20.0	Plate Grip DOL	1.25	TC	0.78	Vert(LL)	0.19	4-7	>500	240	MT20	244/190
TCDL	7.0	Lumber DOL	1.25	BC	0.55	Vert(CT)	-0.31	4-7	>308	180		
BCLL	0.0*	Rep Stress Incr	YES	WB	0.00	Horz(CT)	0.01	2	n/a	n/a		
BCDL	7.0	Code	FBC2023/TPI2014	Matrix-MP							Weight: 34 lb	FT = 20%

LUMBER
TOP CHORD 2x4 SP No.2
BOT CHORD 2x4 SP No.2
WEBS 2x4 SP No.2

BRACING
TOP CHORD Structural wood sheathing directly applied or 6-0-0 oc purlins, except end verticals.
BOT CHORD Structural wood sheathing directly applied or 10-0-0 oc bracing.

REACTIONS (size) 2=0-3-8, 4= Mechanical
Max Horiz 2=203 (LC 11)
Max Uplift 2=-183 (LC 12), 4=-82 (LC 9)
Max Grav 2=389 (LC 1), 4=269 (LC 17)

FORCES (lb) - Maximum Compression/Maximum Tension
TOP CHORD 1-2=0/48, 2-3=-299/154, 3-4=-211/269
BOT CHORD 2-4=-91/225

NOTES
1) Wind: ASCE 7-22; Vult=130mph (3-second gust) Vasd=101mph; TCDL=4.2psf; BCDL=4.2psf; h=18ft; B=50ft; L=30ft; eave=4ft; Cat. II; Exp C; Enclosed; MWFRS (directional) and C-C Zone3 -2-0-0 to 1-0-0, Zone1 1-0-0 to 7-10-4 zone; cantilever left and right exposed ; end vertical left and right exposed;C-C for members and forces & MWFRS for reactions shown; Lumber DOL=1.60 plate grip DOL=1.60
2) Building Designer / Project engineer responsible for verifying applied roof live load shown covers rain loading requirements specific to the use of this truss component.
3) This truss has been designed for a 10.0 psf bottom chord live load nonconcurrent with any other live loads.
4) * This truss has been designed for a live load of 20.0psf on the bottom chord in all areas where a rectangle 3-06-00 tall by 2-00-00 wide will fit between the bottom chord and any other members.
5) Bearings are assumed to be: Joint 2 SP No.2 .
6) Refer to girder(s) for truss to truss connections.
7) Provide mechanical connection (by others) of truss to bearing plate capable of withstanding 82 lb uplift at joint 4 and 183 lb uplift at joint 2.

LOAD CASE(S) Standard

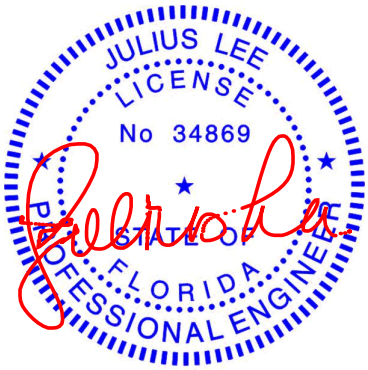

Julius Lee PE No. 34869
MiTek Inc. DBA MiTek USA FL Cert 6634
16023 Swingley Ridge Rd. Chesterfield, MO 63017
Date:

June 23,2025

WARNING - Verify design parameters and READ NOTES ON THIS AND INCLUDED MITEK REFERENCE PAGE MII-7473 rev. 1/2/2023 BEFORE USE.
Design valid for use only with MiTek® connectors. This design is based only upon parameters shown, and is for an individual building component, not a truss system. Before use, the building designer must verify the applicability of design parameters and properly incorporate this design into the overall building design. Bracing indicated is to prevent buckling of individual truss web and/or chord members only. Additional temporary and permanent bracing is always required for stability and to prevent collapse with possible personal injury and property damage. For general guidance regarding the fabrication, storage, delivery, erection and bracing of trusses and truss systems, see **ANSI/TPI1 Quality Criteria and DSB-22** available from Truss Plate Institute (www.tpinst.org) and **BCSI Building Component Safety Information** available from the Structural Building Component Association (www.sbcscomponents.com)

MiTek®
16023 Swingley Ridge Rd.
Chesterfield, MO 63017
314.434.1200 / MiTek-US.com

Job	Truss	Truss Type	Qty	Ply	Mitch Brown
250620-02KM	J05	Jack-Partial	4	1	T37696802 Job Reference (optional)

Coastal Truss & Vinyl Siding, Patterson, GA - 31577,

Run: 8.73 S Feb 19 2025 Print: 8.730 S Feb 19 2025 MiTek Industries, Inc. Fri Jun 20 12:42:45 Page: 1
ID:ICf9K?ad02TtdzWztkagnRz4Ocu-RfC?PsB70Hq3NSgPqnL8w3uITXbGKWrCDoi7J4zJC?f

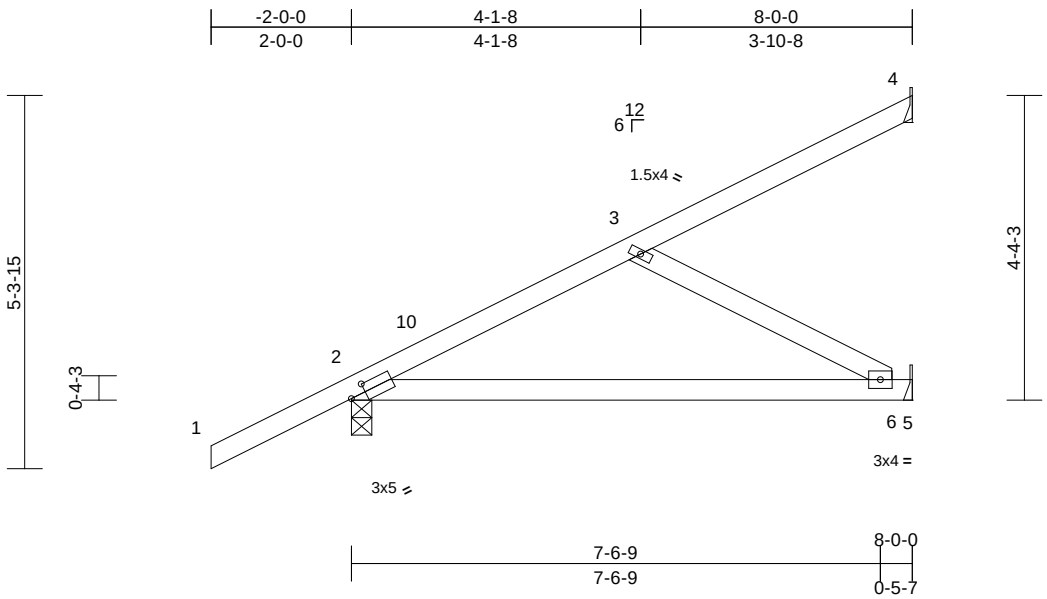

Scale = 1:32.9

Plate Offsets (X, Y): [2:0-2-10,0-1-8]

Loading	(psf)	Spacing	2-0-0	CSI		DEFL	in	(loc)	l/defl	L/d	PLATES	GRIP
TCLL (roof)	20.0	Plate Grip DOL	1.25	TC	0.40	Vert(LL)	-0.13	6-9	>762	240	MT20	244/190
TCDL	7.0	Lumber DOL	1.25	BC	0.47	Vert(CT)	-0.22	6-9	>442	180		
BCLL	0.0*	Rep Stress Incr	YES	WB	0.10	Horz(CT)	0.00	5	n/a	n/a		
BCDL	7.0	Code	FBC2023/TPI2014	Matrix-MP							Weight: 35 lb	FT = 20%

LUMBER
TOP CHORD 2x4 SP No.2
BOT CHORD 2x4 SP No.2
WEBS 2x4 SP No.2

BRACING
TOP CHORD Structural wood sheathing directly applied or 6-0-0 oc purlins.
BOT CHORD Structural wood sheathing directly applied or 10-0-0 oc bracing.

REACTIONS (size) 2=0-3-8, 4= Mechanical, 5= Mechanical
Max Horiz 2=203 (LC 12)
Max Uplift 2=-154 (LC 12), 4=-66 (LC 12), 5=-36 (LC 12)
Max Grav 2=391 (LC 1), 4=86 (LC 17), 5=180 (LC 17)

FORCES (lb) - Maximum Compression/Maximum Tension
TOP CHORD 1-2=0/48, 2-3=-297/110, 3-4=-76/32
BOT CHORD 2-6=-285/266, 5-6=0/0
WEBS 3-6=-302/324

NOTES
1) Wind: ASCE 7-22; Vult=130mph (3-second gust) Vasd=101mph; TCDL=4.2psf; BCDL=4.2psf; h=18ft; B=50ft; L=30ft; eave=4ft; Cat. II; Exp C; Enclosed; MWFRS (directional) and C-C Zone3 -2-0-0 to 1-0-0, Zone1 1-0-0 to 7-11-4 zone; cantilever left and right exposed ; end vertical left and right exposed;C-C for members and forces & MWFRS for reactions shown; Lumber DOL=1.60 plate grip DOL=1.60
2) Building Designer / Project engineer responsible for verifying applied roof live load shown covers rain loading requirements specific to the use of this truss component.
3) This truss has been designed for a 10.0 psf bottom chord live load nonconcurrent with any other live loads.
4) * This truss has been designed for a live load of 20.0psf on the bottom chord in all areas where a rectangle 3-06-00 tall by 2-00-00 wide will fit between the bottom chord and any other members.
5) Bearings are assumed to be: , Joint 2 SP No.2 .
6) Refer to girder(s) for truss to truss connections.
7) Provide mechanical connection (by others) of truss to bearing plate capable of withstanding 66 lb uplift at joint 4, 154 lb uplift at joint 2 and 36 lb uplift at joint 5.

LOAD CASE(S) Standard

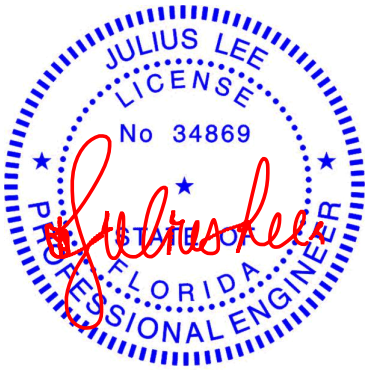

Julius Lee PE No. 34869
MiTek Inc. DBA MiTek USA FL Cert 6634
16023 Swingley Ridge Rd. Chesterfield, MO 63017

Date:

June 23,2025

WARNING - Verify design parameters and READ NOTES ON THIS AND INCLUDED MITEK REFERENCE PAGE MII-7473 rev. 1/2/2023 BEFORE USE.
Design valid for use only with MiTek® connectors. This design is based only upon parameters shown, and is for an individual building component, not a truss system. Before use, the building designer must verify the applicability of design parameters and properly incorporate this design into the overall building design. Bracing indicated is to prevent buckling of individual truss web and/or chord members only. Additional temporary and permanent bracing is always required for stability and to prevent collapse with possible personal injury and property damage. For general guidance regarding the fabrication, storage, delivery, erection and bracing of trusses and truss systems, see **ANSI/TPI1 Quality Criteria and DSB-22** available from Truss Plate Institute (www.tpinst.org) and **BCSI Building Component Safety Information** available from the Structural Building Component Association (www.sbcscomponents.com)

MiTek®
16023 Swingley Ridge Rd.
Chesterfield, MO 63017
314.434.1200 / MiTek-US.com

Job	Truss	Truss Type	Qty	Ply	Mitch Brown
250620-02KM	GE02	Common Supported Gable	1	1	T37696803 Job Reference (optional)

Coastal Truss & Vinyl Siding, Patterson, GA - 31577,

Run: 8.73 S Feb 19 2025 Print: 8.730 S Feb 19 2025 MiTek Industries, Inc. Fri Jun 20 12:42:42 Page: 1
ID:QRQeUdX6ypzR8LDCeuWkdbz4Ocy-RfC?PsB70Hq3NSgPqnL8w3uITXbGKWrCDoi7J4zJC?f

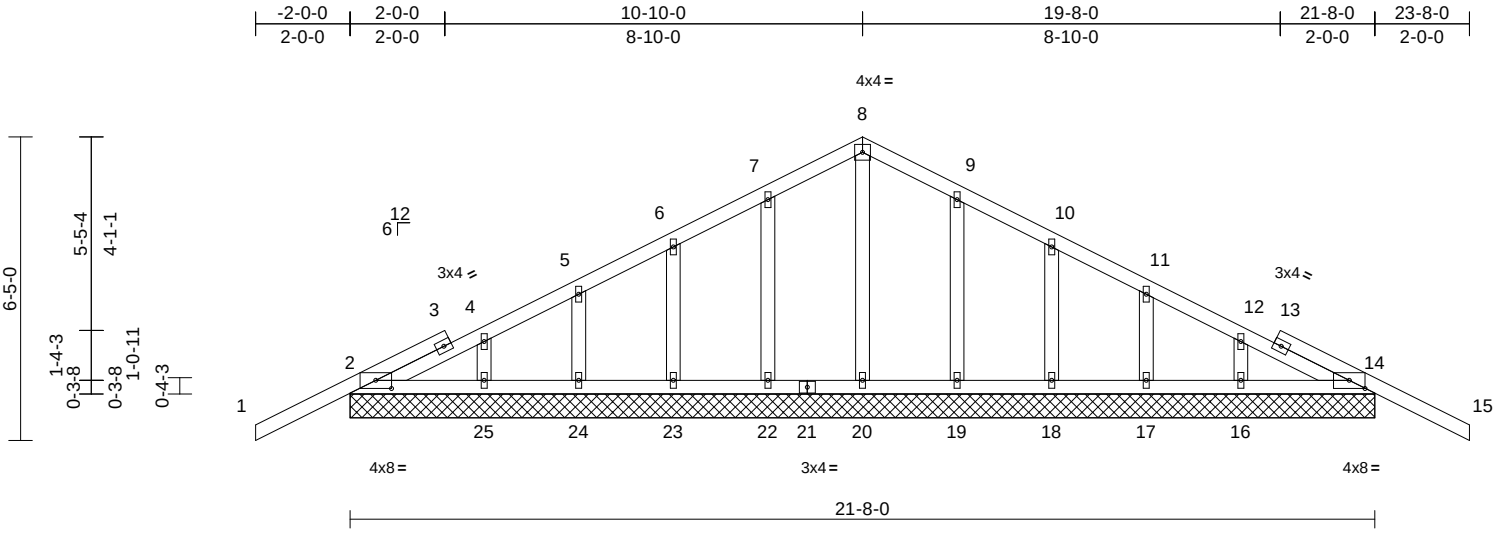

Scale = 1:48.7

Plate Offsets (X, Y): [2:0-4-0,0-2-1], [14:0-4-0,0-2-1]

Loading	(psf)	Spacing	2-0-0	CSI		DEFL	in	(loc)	l/defl	L/d	PLATES	GRIP
TCLL (roof)	20.0	Plate Grip DOL	1.25	TC	0.32	Vert(LL)	n/a	-	n/a	999	MT20	244/190
TCDL	7.0	Lumber DOL	1.25	BC	0.08	Vert(CT)	n/a	-	n/a	999		
BCLL	0.0*	Rep Stress Incr	YES	WB	0.05	Horz(CT)	0.00	29	n/a	n/a		
BCDL	7.0	Code	FBC2023/TPI2014	Matrix-MS							Weight: 116 lb	FT = 20%

LUMBER

TOP CHORD 2x4 SP No.2
BOT CHORD 2x4 SP No.2
OTHERS 2x4 SP No.2

BRACING

TOP CHORD Structural wood sheathing directly applied or 6-0-0 oc purlins.
BOT CHORD Structural wood sheathing directly applied or 10-0-0 oc bracing.

REACTIONS (size) 2=21-8-0, 14=21-8-0, 16=21-8-0, 17=21-8-0, 18=21-8-0, 19=21-8-0, 20=21-8-0, 22=21-8-0, 23=21-8-0, 24=21-8-0, 25=21-8-0
Max Horiz 2=-156 (LC 10)
Max Uplift 2=-164 (LC 12), 14=-164 (LC 12), 16=-22 (LC 8), 17=-76 (LC 12), 18=-55 (LC 12), 19=-60 (LC 12), 22=-60 (LC 12), 23=-55 (LC 12), 24=-76 (LC 12), 25=-20 (LC 9)
Max Grav 2=240 (LC 1), 14=240 (LC 1), 16=136 (LC 18), 17=144 (LC 18), 18=138 (LC 18), 19=147 (LC 18), 20=125 (LC 17), 22=149 (LC 17), 23=137 (LC 17), 24=144 (LC 17), 25=131 (LC 17)

FORCES (lb) - Maximum Compression/Maximum Tension
TOP CHORD 1-2=0/48, 2-4=-105/104, 4-5=-91/92, 5-6=-77/105, 6-7=-66/174, 7-8=-79/243, 8-9=-79/243, 9-10=-56/174, 10-11=-35/105, 11-12=-37/31, 12-14=-99/44, 14-15=0/48
BOT CHORD 2-25=-41/155, 24-25=-41/155, 23-24=-41/155, 22-23=-41/155, 20-22=-41/155, 19-20=-41/155, 18-19=-41/155, 17-18=-41/155, 16-17=-41/155, 14-16=-48/161
WEBS 8-20=-111/9, 7-22=-120/139, 6-23=-109/137, 5-24=-115/149, 4-25=-106/118, 9-19=-119/139, 10-18=-110/137, 11-17=-115/149, 12-16=-109/116

LOAD CASE(S) Standard

NOTES

1) Unbalanced roof live loads have been considered for this design.
2) Wind: ASCE 7-22; Vult=130mph (3-second gust) Vasd=101mph; TCDL=4.2psf; BCDL=4.2psf; h=18ft; B=50ft; L=30ft; eave=2ft; Cat. II; Exp C; Enclosed; MWFRS (directional) and C-C Zone3 zone; cantilever left and right exposed ; end vertical left and right exposed;C-C for members and forces & MWFRS for reactions shown; Lumber DOL=1.60 plate grip DOL=1.60
3) Truss designed for wind loads in the plane of the truss only. For studs exposed to wind (normal to the face), see Standard Industry Gable End Details as applicable, or consult qualified building designer as per ANSI/TPI 1.
4) Building Designer / Project engineer responsible for verifying applied roof live load shown covers rain loading requirements specific to the use of this truss component.
5) All plates are 1.5x4 MT20 unless otherwise indicated.
6) Gable requires continuous bottom chord bearing.
7) Gable studs spaced at 2-0-0 oc.
8) This truss has been designed for a 10.0 psf bottom chord live load nonconcurrent with any other live loads.
9) * This truss has been designed for a live load of 20.0psf on the bottom chord in all areas where a rectangle 3-06-00 tall by 2-00-00 wide will fit between the bottom chord and any other members.
10) All bearings are assumed to be SP No.2 .
11) Provide mechanical connection (by others) of truss to bearing plate capable of withstanding 164 lb uplift at joint 2, 164 lb uplift at joint 14, 60 lb uplift at joint 22, 55 lb uplift at joint 23, 76 lb uplift at joint 24, 20 lb uplift at joint 25, 60 lb uplift at joint 19, 55 lb uplift at joint 18, 76 lb uplift at joint 17, 22 lb uplift at joint 16, 164 lb uplift at joint 2 and 164 lb uplift at joint 14.

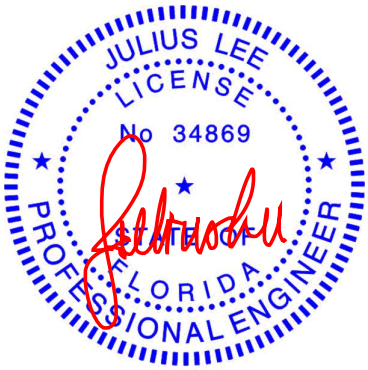

Julius Lee PE No. 34869
MiTek Inc. DBA MiTek USA FL Cert 6634
16023 Swingley Ridge Rd. Chesterfield, MO 63017

Date:

June 23,2025

WARNING - Verify design parameters and READ NOTES ON THIS AND INCLUDED MITEK REFERENCE PAGE MII-7473 rev. 1/2/2023 BEFORE USE.
Design valid for use only with MiTek® connectors. This design is based only upon parameters shown, and is for an individual building component, not a truss system. Before use, the building designer must verify the applicability of design parameters and properly incorporate this design into the overall building design. Bracing indicated is to prevent buckling of individual truss web and/or chord members only. Additional temporary and permanent bracing is always required for stability and to prevent collapse with possible personal injury and property damage. For general guidance regarding the fabrication, storage, delivery, erection and bracing of trusses and truss systems, see **ANSI/TPI1 Quality Criteria and DSB-22** available from Truss Plate Institute (www.tpinst.org) and **BCSI Building Component Safety Information** available from the Structural Building Component Association (www.sbcscomponents.com)

MiTek®
16023 Swingley Ridge Rd.
Chesterfield, MO 63017
314.434.1200 / MiTek-US.com

Job	Truss	Truss Type	Qty	Ply	Mitch Brown
250620-02KM	T03	Common	2	1	T37696804 Job Reference (optional)

Coastal Truss & Vinyl Siding, Patterson, GA - 31577,

Run: 8.73 S Feb 19 2025 Print: 8.730 S Feb 19 2025 MiTek Industries, Inc. Fri Jun 20 12:42:46 Page: 1
ID:FbnvkhctYfjbsGgL?9c8ssz4Ocs-RfC?PsB70Hq3NSgPqnL8w3uITXbGKWrCDoi7J4zJC?f

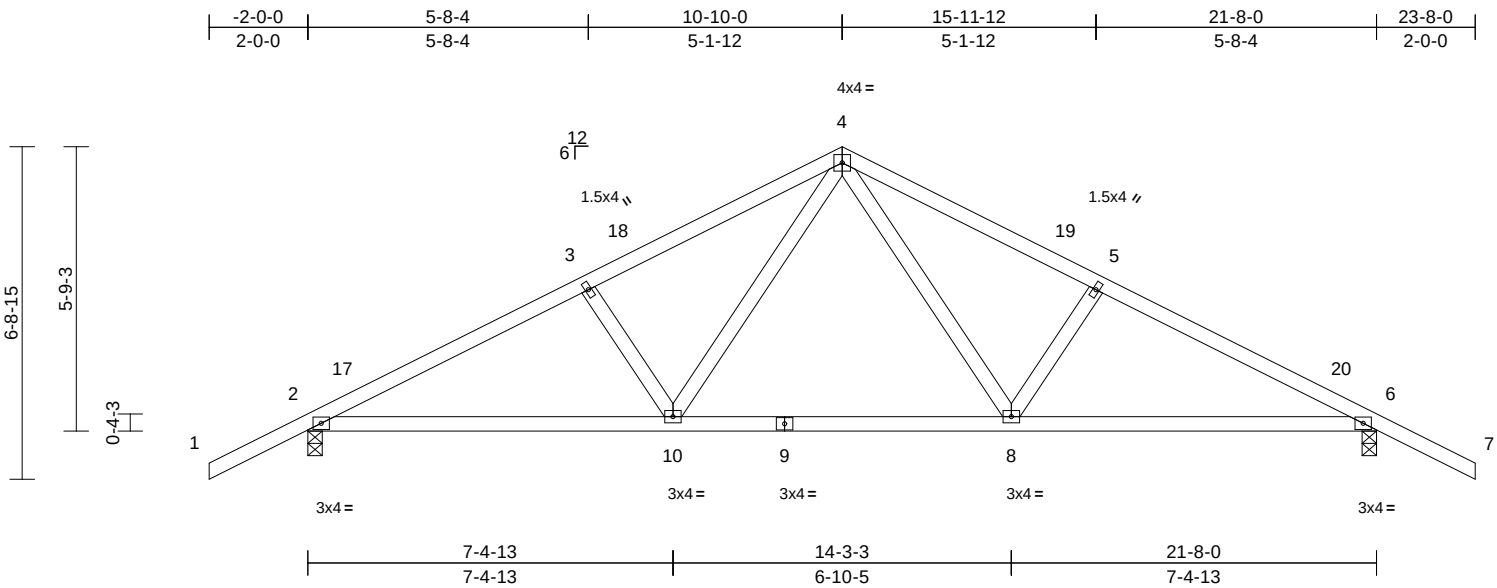

Scale = 1:46.7

Loading	(psf)	Spacing	2-0-0	CSI		DEFL	in	(loc)	l/defl	L/d	PLATES	GRIP
TCLL (roof)	20.0	Plate Grip DOL	1.25	TC	0.32	Vert(LL)	-0.07	10-13	>999	240	MT20	244/190
TCDL	7.0	Lumber DOL	1.25	BC	0.44	Vert(CT)	-0.13	10-13	>999	180		
BCLL	0.0*	Rep Stress Incr	YES	WB	0.13	Horz(CT)	0.03	6	n/a	n/a		
BCDL	7.0	Code	FBC2023/TPI2014	Matrix-MS							Weight: 103 lb	FT = 20%

LUMBER

TOP CHORD 2x4 SP No.2
BOT CHORD 2x4 SP No.2
WEBS 2x4 SP No.2

BRACING

TOP CHORD Structural wood sheathing directly applied or 5-0-7 oc purlins.
BOT CHORD Structural wood sheathing directly applied or 9-11-3 oc bracing.

REACTIONS (size) 2=0-3-8, 6=0-3-8
Max Horiz 2=-164 (LC 10)
Max Uplift 2=-313 (LC 12), 6=-313 (LC 12)
Max Grav 2=845 (LC 1), 6=845 (LC 1)

FORCES (lb) - Maximum Compression/Maximum Tension
TOP CHORD 1-2=0/48, 2-3=-1262/506, 3-4=-1112/502, 4-5=-1112/502, 5-6=-1262/506, 6-7=0/48
BOT CHORD 2-10=-319/1082, 8-10=-132/719, 6-8=-353/1082
WEBS 4-8=-174/420, 5-8=-296/240, 4-10=-174/420, 3-10=-296/240

NOTES

1) Unbalanced roof live loads have been considered for this design.
2) Wind: ASCE 7-22; Vult=130mph (3-second gust) Vasd=101mph; TCDL=4.2psf; BCDL=4.2psf; h=18ft; B=50ft; L=30ft; eave=4ft; Cat. II; Exp C; Enclosed; MWFRS (directional) and C-C Zone3 -2-0-0 to 1-0-0, Zone1 1-0-0 to 10-10-0, Zone2 10-10-0 to 15-0-15, Zone1 15-0-15 to 23-8-0 zone; cantilever left and right exposed ; end vertical left and right exposed;C-C for members and forces & MWFRS for reactions shown; Lumber DOL=1.60 plate grip DOL=1.60
3) Building Designer / Project engineer responsible for verifying applied roof live load shown covers rain loading requirements specific to the use of this truss component.
4) This truss has been designed for a 10.0 psf bottom chord live load nonconcurrent with any other live loads.
5) * This truss has been designed for a live load of 20.0psf on the bottom chord in all areas where a rectangle 3-06-00 tall by 2-00-00 wide will fit between the bottom chord and any other members.
6) All bearings are assumed to be SP No.2 .
7) Provide mechanical connection (by others) of truss to bearing plate capable of withstanding 313 lb uplift at joint 2 and 313 lb uplift at joint 6.

LOAD CASE(S) Standard

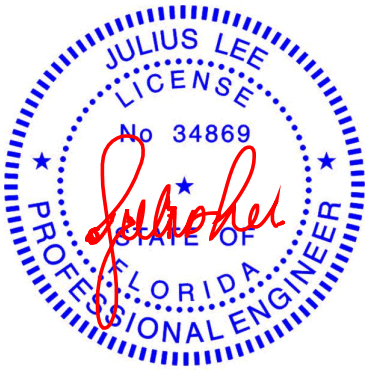

Julius Lee PE No. 34869
MiTek Inc. DBA MiTek USA FL Cert 6634
16023 Swingley Ridge Rd. Chesterfield, MO 63017
Date:

June 23,2025

WARNING - Verify design parameters and READ NOTES ON THIS AND INCLUDED MITEK REFERENCE PAGE MII-7473 rev. 1/2/2023 BEFORE USE.
Design valid for use only with MiTek® connectors. This design is based only upon parameters shown, and is for an individual building component, not a truss system. Before use, the building designer must verify the applicability of design parameters and properly incorporate this design into the overall building design. Bracing indicated is to prevent buckling of individual truss web and/or chord members only. Additional temporary and permanent bracing is always required for stability and to prevent collapse with possible personal injury and property damage. For general guidance regarding the fabrication, storage, delivery, erection and bracing of trusses and truss systems, see **ANSI/TPI1 Quality Criteria and DSB-22** available from Truss Plate Institute (www.tpinst.org) and **BCSI Building Component Safety Information** available from the Structural Building Component Association (www.sbcscomponents.com)

MiTek®
16023 Swingley Ridge Rd.
Chesterfield, MO 63017
314.434.1200 / MiTek-US.com

Job	Truss	Truss Type	Qty	Ply	Mitch Brown
250620-02KM	T04	Common	1	1	T37696805 Job Reference (optional)

Coastal Truss & Vinyl Siding, Patterson, GA - 31577,

Run: 8.73 S Feb 19 2025 Print: 8.730 S Feb 19 2025 MiTek Industries, Inc. Fri Jun 20 12:42:46 Page: 1
ID:jnLHy1dVJzrRUQFYZs8NP3z4Ocr-RfC?PsB70Hq3NSgPqnL8w3uITXbGKWrCDoi7J4zJC?f

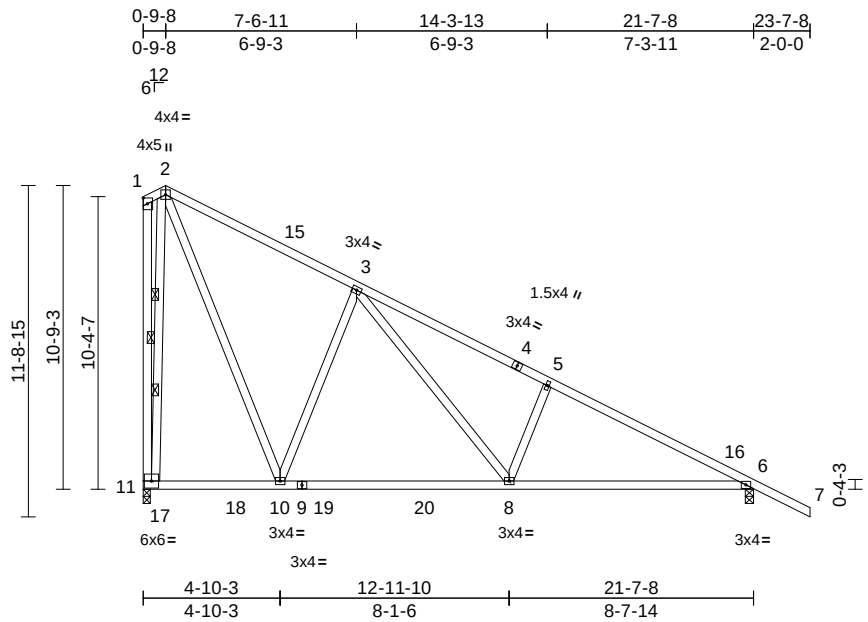

Scale = 1:81.6

Loading	(psf)	Spacing	2-0-0	CSI		DEFL	in	(loc)	l/defl	L/d	PLATES	GRIP
TCLL (roof)	20.0	Plate Grip DOL	1.25	TC	0.99	Vert(LL)	-0.15	8-10	>999	240	MT20	244/190
TCDL	7.0	Lumber DOL	1.25	BC	0.68	Vert(CT)	-0.24	8-14	>999	180		
BCLL	0.0*	Rep Stress Incr	YES	WB	0.79	Horz(CT)	0.02	6	n/a	n/a		
BCDL	7.0	Code	FBC2023/TPI2014	Matrix-MS							Weight: 147 lb	FT = 20%

LUMBER

TOP CHORD 2x4 SP No.2
BOT CHORD 2x4 SP No.2
WEBS 2x4 SP No.2

BRACING

TOP CHORD Structural wood sheathing directly applied or 4-5-4 oc purlins, except end verticals.
BOT CHORD Structural wood sheathing directly applied or 10-0-0 oc bracing.
WEBS 1 Row at midpt 2-11
WEBS 2 Rows at 1/3 pts 1-11

REACTIONS (size) 6=0-3-8, 11=0-3-0
Max Horiz 11=-498 (LC 10)
Max Uplift 6=-301 (LC 12), 11=-225 (LC 12)
Max Grav 6=968 (LC 18), 11=983 (LC 18)

FORCES (lb) - Maximum Compression/Maximum Tension
TOP CHORD 1-2=-366/398, 2-3=-587/367, 3-5=-1284/482, 5-6=-1371/432, 6-7=0/48, 1-11=-395/403
BOT CHORD 10-11=-286/555, 8-10=0/730, 6-8=-200/1185
WEBS 2-10=-354/983, 3-10=-720/404, 3-8=-234/814, 5-8=-370/257, 2-11=-1069/864

NOTES

1) Unbalanced roof live loads have been considered for this design.
2) Wind: ASCE 7-22; Vult=130mph (3-second gust) Vasd=101mph; TCDL=4.2psf; BCDL=4.2psf; h=18ft; B=50ft; L=30ft; eave=4ft; Cat. II; Exp C; Enclosed; MWFRS (directional) and C-C Zone3 20-2-4 to 20-10-0, Zone2 20-10-0 to 25-0-15, Zone1 25-0-15 to 43-8-0 zone; cantilever left and right exposed ; end vertical left and right exposed;C-C for members and forces & MWFRS for reactions shown; Lumber DOL=1.60 plate grip DOL=1.60
3) Building Designer / Project engineer responsible for verifying applied roof live load shown covers rain loading requirements specific to the use of this truss component.
4) This truss has been designed for a 10.0 psf bottom chord live load nonconcurrent with any other live loads.
5) * This truss has been designed for a live load of 20.0psf on the bottom chord in all areas where a rectangle 3-06-00 tall by 2-00-00 wide will fit between the bottom chord and any other members, with BCDL = 7.0psf.
6) All bearings are assumed to be SP No.2 .
7) Provide mechanical connection (by others) of truss to bearing plate capable of withstanding 225 lb uplift at joint 11 and 301 lb uplift at joint 6.

LOAD CASE(S) Standard

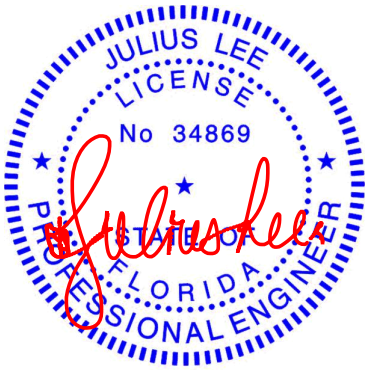

Julius Lee PE No. 34869
MiTek Inc. DBA MiTek USA FL Cert 6634
16023 Swingley Ridge Rd. Chesterfield, MO 63017
Date:

June 23,2025

WARNING - Verify design parameters and READ NOTES ON THIS AND INCLUDED MITEK REFERENCE PAGE MII-7473 rev. 1/2/2023 BEFORE USE.
Design valid for use only with MiTek® connectors. This design is based only upon parameters shown, and is for an individual building component, not a truss system. Before use, the building designer must verify the applicability of design parameters and properly incorporate this design into the overall building design. Bracing indicated is to prevent buckling of individual truss web and/or chord members only. Additional temporary and permanent bracing is always required for stability and to prevent collapse with possible personal injury and property damage. For general guidance regarding the fabrication, storage, delivery, erection and bracing of trusses and truss systems, see **ANSI/TPI1 Quality Criteria and DSB-22** available from Truss Plate Institute (www.tpinst.org) and **BCSI Building Component Safety Information** available from the Structural Building Component Association (www.sbcscomponents.com)

MiTek®
16023 Swingley Ridge Rd.
Chesterfield, MO 63017
314.434.1200 / MiTek-US.com

Job	Truss	Truss Type	Qty	Ply	Mitch Brown
250620-02KM	T05	Common	7	1	T37696806 Job Reference (optional)

Coastal Truss & Vinyl Siding, Patterson, GA - 31577,

Run: 8.73 S Feb 19 2025 Print: 8.730 S Feb 19 2025 MiTek Industries, Inc. Fri Jun 20 12:42:47 Page: 1
ID:jnLHy1dVJzrRUQFYZs8NP3z4Ocr-RfC?PsB70Hq3NSgPqnL8w3uITXbGKWrCDoi7J4zJC?f

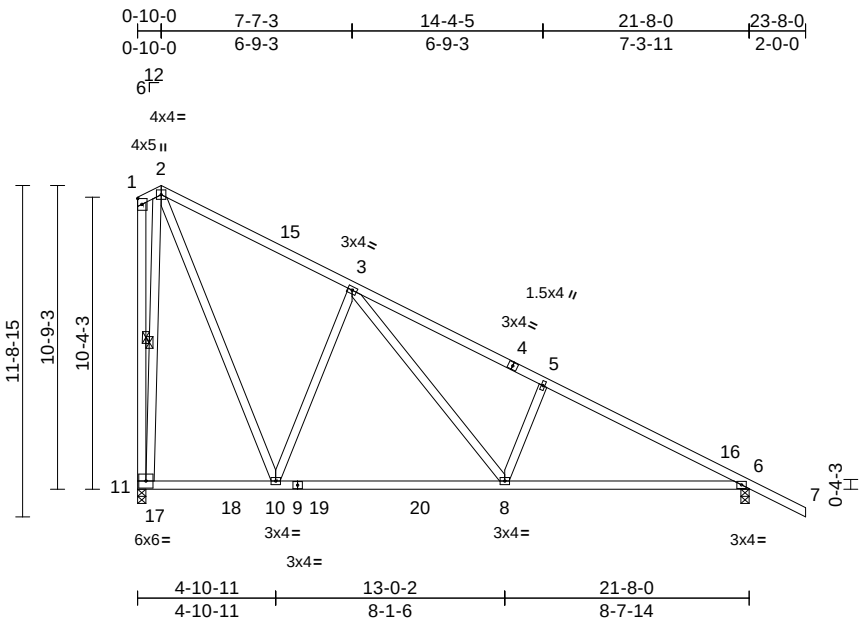

Scale = 1:81.6

Loading	(psf)	Spacing	2-0-0	CSI		DEFL	in	(loc)	l/defl	L/d	PLATES	GRIP
TCLL (roof)	20.0	Plate Grip DOL	1.25	TC	1.00	Vert(LL)	-0.15	8-10	>999	240	MT20	244/190
TCDL	7.0	Lumber DOL	1.25	BC	0.68	Vert(CT)	-0.24	8-14	>999	180		
BCLL	0.0*	Rep Stress Incr	YES	WB	0.79	Horz(CT)	0.02	6	n/a	n/a		
BCDL	7.0	Code	FBC2023/TPI2014	Matrix-MS							Weight: 147 lb	FT = 20%

LUMBER
TOP CHORD 2x4 SP No.2
BOT CHORD 2x4 SP No.2
WEBS 2x4 SP No.2

BRACING
TOP CHORD Structural wood sheathing directly applied or 4-5-4 oc purlins, except end verticals.
BOT CHORD Structural wood sheathing directly applied or 10-0-0 oc bracing.
WEBS 1 Row at midpt 1-11, 2-11

REACTIONS (size) 6=0-3-8, 11=0-3-8
Max Horiz 11=-497 (LC 10)
Max Uplift 6=-301 (LC 12), 11=-226 (LC 12)
Max Grav 6=970 (LC 18), 11=984 (LC 18)

FORCES (lb) - Maximum Compression/Maximum Tension
TOP CHORD 1-2=-360/392, 2-3=-590/369, 3-5=-1288/483, 5-6=-1376/433, 6-7=0/48, 1-11=-378/390
BOT CHORD 10-11=-282/551, 8-10=0/733, 6-8=-200/1187
WEBS 2-10=-353/984, 3-10=-719/403, 3-8=-234/814, 5-8=-370/257, 2-11=-1064/847

NOTES
1) Unbalanced roof live loads have been considered for this design.
2) Wind: ASCE 7-22; Vult=130mph (3-second gust) Vasd=101mph; TCDL=4.2psf; BCDL=4.2psf; h=18ft; B=50ft; L=30ft; eave=4ft; Cat. II; Exp C; Enclosed; MWFRS (directional) and C-C Zone3 20-1-12 to 20-10-0, Zone2 20-10-0 to 25-0-15, Zone1 25-0-15 to 43-8-0 zone; cantilever left and right exposed ; end vertical left and right exposed;C-C for members and forces & MWFRS for reactions shown; Lumber DOL=1.60 plate grip DOL=1.60
3) Building Designer / Project engineer responsible for verifying applied roof live load shown covers rain loading requirements specific to the use of this truss component.
4) This truss has been designed for a 10.0 psf bottom chord live load nonconcurrent with any other live loads.
5) * This truss has been designed for a live load of 20.0psf on the bottom chord in all areas where a rectangle 3-06-00 tall by 2-00-00 wide will fit between the bottom chord and any other members, with BCDL = 7.0psf.
6) All bearings are assumed to be SP No.2 .
7) Provide mechanical connection (by others) of truss to bearing plate capable of withstanding 226 lb uplift at joint 11 and 301 lb uplift at joint 6.

LOAD CASE(S) Standard

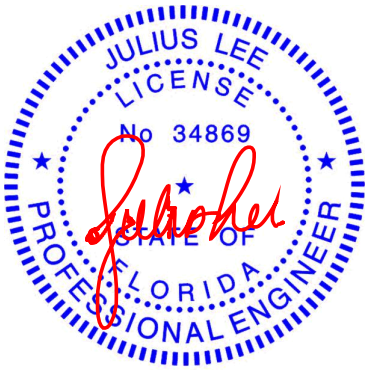

Julius Lee PE No. 34869
MiTek Inc. DBA MiTek USA FL Cert 6634
16023 Swingley Ridge Rd. Chesterfield, MO 63017
Date:

June 23,2025

WARNING - Verify design parameters and READ NOTES ON THIS AND INCLUDED MITEK REFERENCE PAGE MII-7473 rev. 1/2/2023 BEFORE USE.
Design valid for use only with MiTek® connectors. This design is based only upon parameters shown, and is for an individual building component, not a truss system. Before use, the building designer must verify the applicability of design parameters and properly incorporate this design into the overall building design. Bracing indicated is to prevent buckling of individual truss web and/or chord members only. Additional temporary and permanent bracing is always required for stability and to prevent collapse with possible personal injury and property damage. For general guidance regarding the fabrication, storage, delivery, erection and bracing of trusses and truss systems, see **ANSI/TPI1 Quality Criteria and DSB-22** available from Truss Plate Institute (www.tpinst.org) and **BCSI Building Component Safety Information** available from the Structural Building Component Association (www.sbcscomponents.com)

MiTek®
16023 Swingley Ridge Rd.
Chesterfield, MO 63017
314.434.1200 / MiTek-US.com

Job	Truss	Truss Type	Qty	Ply	Mitch Brown
250620-02KM	M02	Monopitch	2	1	T37696807 Job Reference (optional)

Coastal Truss & Vinyl Siding, Patterson, GA - 31577,

Run: 8.73 S Feb 19 2025 Print: 8.730 S Feb 19 2025 MiTek Industries, Inc. Fri Jun 20 12:42:45 Page: 1
ID:ICf9K?ad02TtdzWztkagnRz4Ocu-RfC?PsB70Hq3NSgPqnL8w3uITXbGKWrCDoi7J4zJC?f

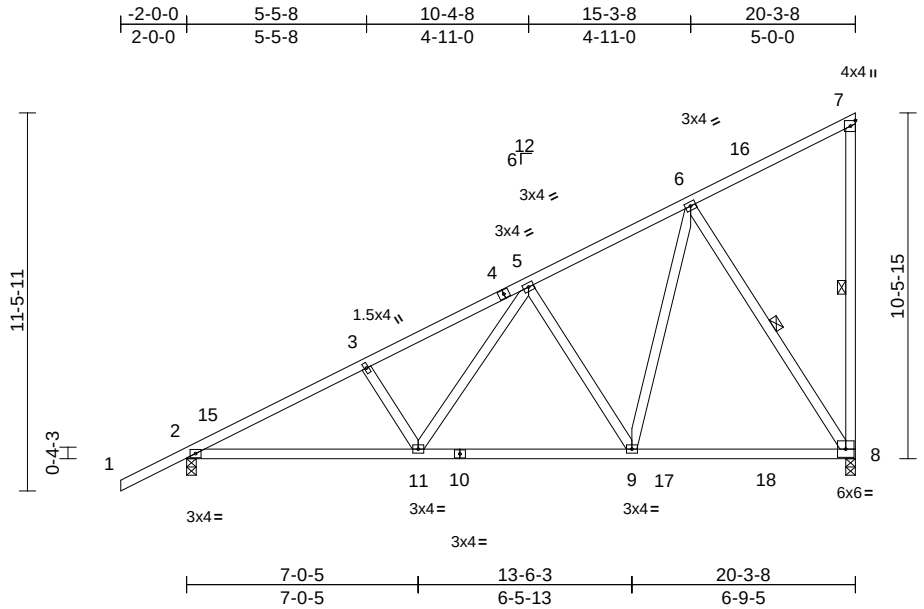

Scale = 1:69.9

Loading	(psf)	Spacing	2-0-0	CSI		DEFL	in	(loc)	l/defl	L/d	PLATES	GRIP
TCLL (roof)	20.0	Plate Grip DOL	1.25	TC	0.98	Vert(LL)	-0.10	8-9	>999	240	MT20	244/190
TCDL	7.0	Lumber DOL	1.25	BC	0.44	Vert(CT)	-0.15	8-9	>999	180		
BCLL	0.0*	Rep Stress Incr	YES	WB	0.32	Horz(CT)	0.02	8	n/a	n/a		
BCDL	7.0	Code	FBC2023/TPI2014	Matrix-MS							Weight: 128 lb	FT = 20%

LUMBER
TOP CHORD 2x4 SP No.2
BOT CHORD 2x4 SP No.2
WEBS 2x4 SP No.2

BRACING
TOP CHORD Structural wood sheathing directly applied or 4-11-6 oc purlins, except end verticals.
BOT CHORD Structural wood sheathing directly applied or 7-1-1 oc bracing.
WEBS 1 Row at midpt 7-8, 6-8

REACTIONS (size) 2=0-3-8, 8=0-3-8
Max Horiz 2=488 (LC 11)
Max Uplift 2=-287 (LC 12), 8=-218 (LC 9)
Max Grav 2=900 (LC 17), 8=906 (LC 17)

FORCES (lb) - Maximum Compression/Maximum Tension
TOP CHORD 1-2=0/48, 2-3=-1310/423, 3-5=-1202/428, 5-6=-721/349, 6-7=-224/203, 7-8=-124/177
BOT CHORD 2-11=-692/1302, 9-11=-505/882, 8-9=-345/473
WEBS 3-11=-276/202, 5-11=-154/513, 5-9=-498/255, 6-9=-208/680, 6-8=-807/377

NOTES
1) Wind: ASCE 7-22; Vult=130mph (3-second gust) Vasd=101mph; TCDL=4.2psf; BCDL=4.2psf; h=18ft; B=50ft; L=30ft; eave=4ft; Cat. II; Exp C; Enclosed; MWFRS (directional) and C-C Zone3 -2-0-0 to 1-0-0, Zone1 1-0-0 to 20-1-12 zone; cantilever left and right exposed ; end vertical left and right exposed;C-C for members and forces & MWFRS for reactions shown; Lumber DOL=1.60 plate grip DOL=1.60
2) Building Designer / Project engineer responsible for verifying applied roof live load shown covers rain loading requirements specific to the use of this truss component.
3) This truss has been designed for a 10.0 psf bottom chord live load nonconcurrent with any other live loads.
4) * This truss has been designed for a live load of 20.0psf on the bottom chord in all areas where a rectangle 3-06-00 tall by 2-00-00 wide will fit between the bottom chord and any other members, with BCDL = 7.0psf.
5) All bearings are assumed to be SP No.2 .
6) Provide mechanical connection (by others) of truss to bearing plate capable of withstanding 218 lb uplift at joint 8 and 287 lb uplift at joint 2.

LOAD CASE(S) Standard

Julius Lee PE No. 34869
MiTek Inc. DBA MiTek USA FL Cert 6634
16023 Swingley Ridge Rd. Chesterfield, MO 63017
Date:

June 23,2025

WARNING - Verify design parameters and READ NOTES ON THIS AND INCLUDED MITEK REFERENCE PAGE MII-7473 rev. 1/2/2023 BEFORE USE.
Design valid for use only with MiTek® connectors. This design is based only upon parameters shown, and is for an individual building component, not a truss system. Before use, the building designer must verify the applicability of design parameters and properly incorporate this design into the overall building design. Bracing indicated is to prevent buckling of individual truss web and/or chord members only. Additional temporary and permanent bracing is always required for stability and to prevent collapse with possible personal injury and property damage. For general guidance regarding the fabrication, storage, delivery, erection and bracing of trusses and truss systems, see **ANSI/TPI1 Quality Criteria and DSB-22** available from Truss Plate Institute (www.tpinst.org) and **BCSI Building Component Safety Information** available from the Structural Building Component Association (www.sbcscomponents.com)

MiTek®
16023 Swingley Ridge Rd.
Chesterfield, MO 63017
314.434.1200 / MiTek-US.com

Job	Truss	Truss Type	Qty	Ply	Mitch Brown
250620-02KM	H15	Half Hip	1	1	T37696808 Job Reference (optional)

Coastal Truss & Vinyl Siding, Patterson, GA - 31577,

Run: 8.73 S Feb 19 2025 Print: 8.730 S Feb 19 2025 MiTek Industries, Inc. Fri Jun 20 12:42:45 Page: 1
ID:q06m6fa?FkL0?pxnK03RFDz4Ocv-RfC?PsB70Hq3NSgPqnL8w3uITXbGKWrCDoi7J4zJC?f

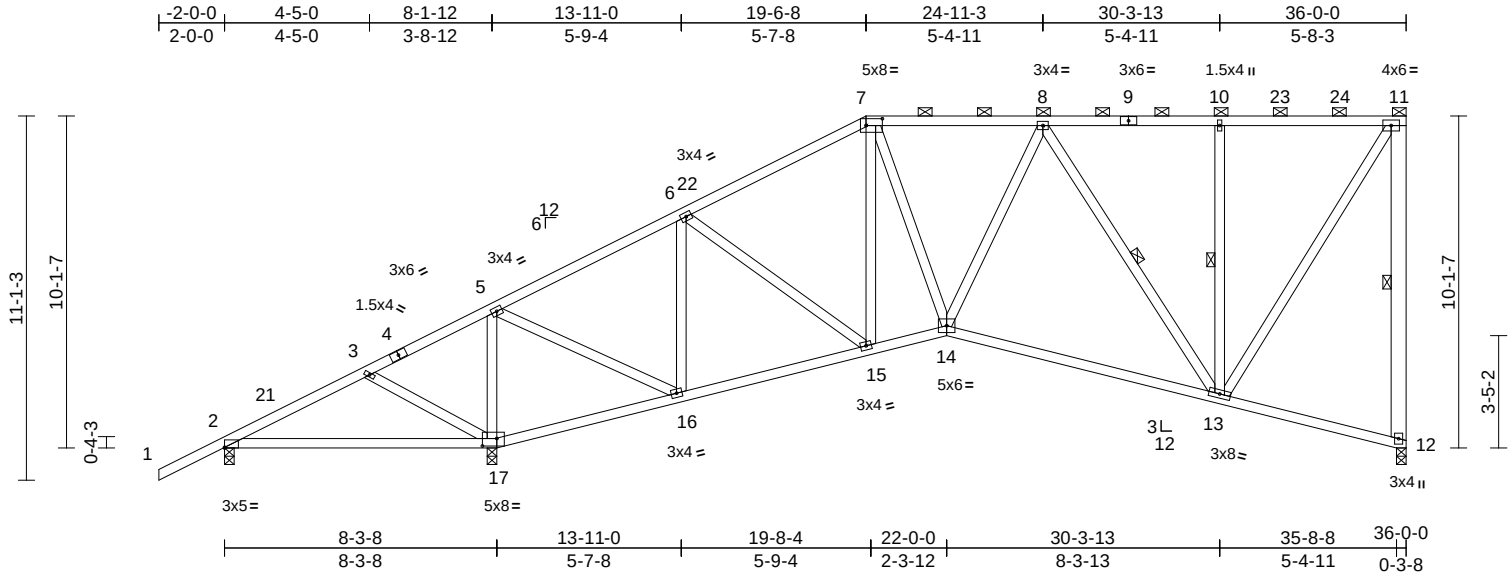

Scale = 1:70.2

Plate Offsets (X, Y): [2:Edge,0-0-4], [7:0-6-0,0-2-8], [17:0-5-4,0-2-12]

Loading	(psf)	Spacing	2-0-0	CSI		DEFL	in	(loc)	l/defl	L/d	PLATES	GRIP
TCLL (roof)	20.0	Plate Grip DOL	1.25	TC	0.49	Vert(LL)	-0.14	13-14	>999	240	MT20	244/190
TCDL	7.0	Lumber DOL	1.25	BC	0.53	Vert(CT)	-0.26	13-14	>999	180		
BCLL	0.0*	Rep Stress Incr	YES	WB	0.69	Horz(CT)	0.05	12	n/a	n/a		
BCDL	7.0	Code	FBC2023/TPI2014	Matrix-MS							Weight: 247 lb	FT = 20%

LUMBER
TOP CHORD 2x4 SP No.2
BOT CHORD 2x4 SP No.2
WEBS 2x4 SP No.2 *Except* 11-12:2x6 SP No.2

BRACING
TOP CHORD Structural wood sheathing directly applied or 5-10-1 oc purlins, except end verticals, and 2-0-0 oc purlins (6-0-0 max.): 7-11.
BOT CHORD Structural wood sheathing directly applied or 6-0-0 oc bracing.
WEBS 1 Row at midpt 11-12, 8-13, 10-13

REACTIONS (size) 2=0-3-8, 12=0-3-8, 17=0-3-8
Max Horiz 2=476 (LC 11)
Max Uplift 2=-114 (LC 12), 12=-276 (LC 9), 17=-435 (LC 12)
Max Grav 2=201 (LC 18), 12=868 (LC 1), 17=1490 (LC 1)

FORCES (lb) - Maximum Compression/Maximum Tension
TOP CHORD 1-2=0/48, 2-3=-514/491, 3-5=-583/637, 5-6=-652/302, 6-7=-915/393, 7-8=-851/390, 8-10=-485/342, 10-11=-485/342, 11-12=-843/406
BOT CHORD 2-17=-278/200, 16-17=-473/253, 15-16=-522/664, 14-15=-618/866, 13-14=-583/845, 12-13=-211/234
WEBS 3-17=-264/144, 5-17=-1170/642, 5-16=-528/1062, 6-16=-610/396, 6-15=-124/300, 7-15=-183/125, 7-14=-93/331, 8-14=-178/280, 8-13=-567/374, 10-13=-312/203, 11-13=-392/848

NOTES
1) Unbalanced roof live loads have been considered for this design.
2) Wind: ASCE 7-22; Vult=130mph (3-second gust) Vasd=101mph; TCDL=4.2psf; BCDL=4.2psf; h=18ft; B=50ft; L=36ft; eave=5ft; Cat. II; Exp C; Enclosed; MWFRS (directional) and C-C Zone3 -2-0-0 to 1-7-3, Zone1 1-7-3 to 19-6-8, Zone2 19-6-8 to 24-11-3, Zone1 24-11-3 to 35-9-4 zone; cantilever left and right exposed ; end vertical left and right exposed;C-C for members and forces & MWFRS for reactions shown; Lumber DOL=1.60 plate grip DOL=1.60
3) Building Designer / Project engineer responsible for verifying applied roof live load shown covers rain loading requirements specific to the use of this truss component.
4) Provide adequate drainage to prevent water ponding.
5) This truss has been designed for a 10.0 psf bottom chord live load nonconcurrent with any other live loads.
6) * This truss has been designed for a live load of 20.0psf on the bottom chord in all areas where a rectangle 3-06-00 tall by 2-00-00 wide will fit between the bottom chord and any other members.
7) All bearings are assumed to be SP No.2 .
8) Bearing at joint(s) 12 considers parallel to grain value using ANSI/TPI 1 angle to grain formula. Building designer should verify capacity of bearing surface.
9) Provide mechanical connection (by others) of truss to bearing plate capable of withstanding 276 lb uplift at joint 12, 114 lb uplift at joint 2 and 435 lb uplift at joint 17.
10) Graphical purlin representation does not depict the size or the orientation of the purlin along the top and/or bottom chord.

LOAD CASE(S) Standard

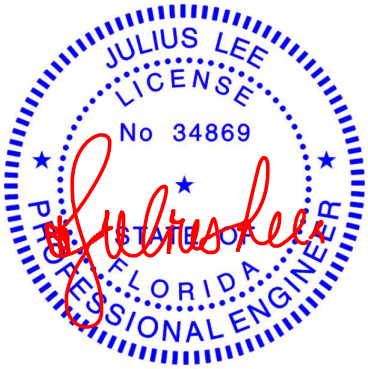

Julius Lee PE No. 34869
MiTek Inc. DBA MiTek USA FL Cert 6634
16023 Swingley Ridge Rd. Chesterfield, MO 63017
Date:

June 23,2025

WARNING - Verify design parameters and READ NOTES ON THIS AND INCLUDED MITEK REFERENCE PAGE MII-7473 rev. 1/2/2023 BEFORE USE.
Design valid for use only with MiTek® connectors. This design is based only upon parameters shown, and is for an individual building component, not a truss system. Before use, the building designer must verify the applicability of design parameters and properly incorporate this design into the overall building design. Bracing indicated is to prevent buckling of individual truss web and/or chord members only. Additional temporary and permanent bracing is always required for stability and to prevent collapse with possible personal injury and property damage. For general guidance regarding the fabrication, storage, delivery, erection and bracing of trusses and truss systems, see **ANSI/TPI1 Quality Criteria and DSB-22** available from Truss Plate Institute (www.tpinst.org) and **BCSI Building Component Safety Information** available from the Structural Building Component Association (www.sbcscomponents.com)

MiTek®
16023 Swingley Ridge Rd.
Chesterfield, MO 63017
314.434.1200 / MiTek-US.com

Job	Truss	Truss Type	Qty	Ply	Mitch Brown
250620-02KM	T06	Roof Special	1	1	T37696809 Job Reference (optional)

Coastal Truss & Vinyl Siding, Patterson, GA - 31577,

Run: 8.73 S Feb 19 2025 Print: 8.730 S Feb 19 2025 MiTek Industries, Inc. Fri Jun 20 12:42:47 Page: 1
ID:Bzvf9Nd74H_I6aqk6afcyHz4Ocq-RfC?PsB70Hq3NSgPqnL8w3uITXbGKWrCDoi7J4zJC?f

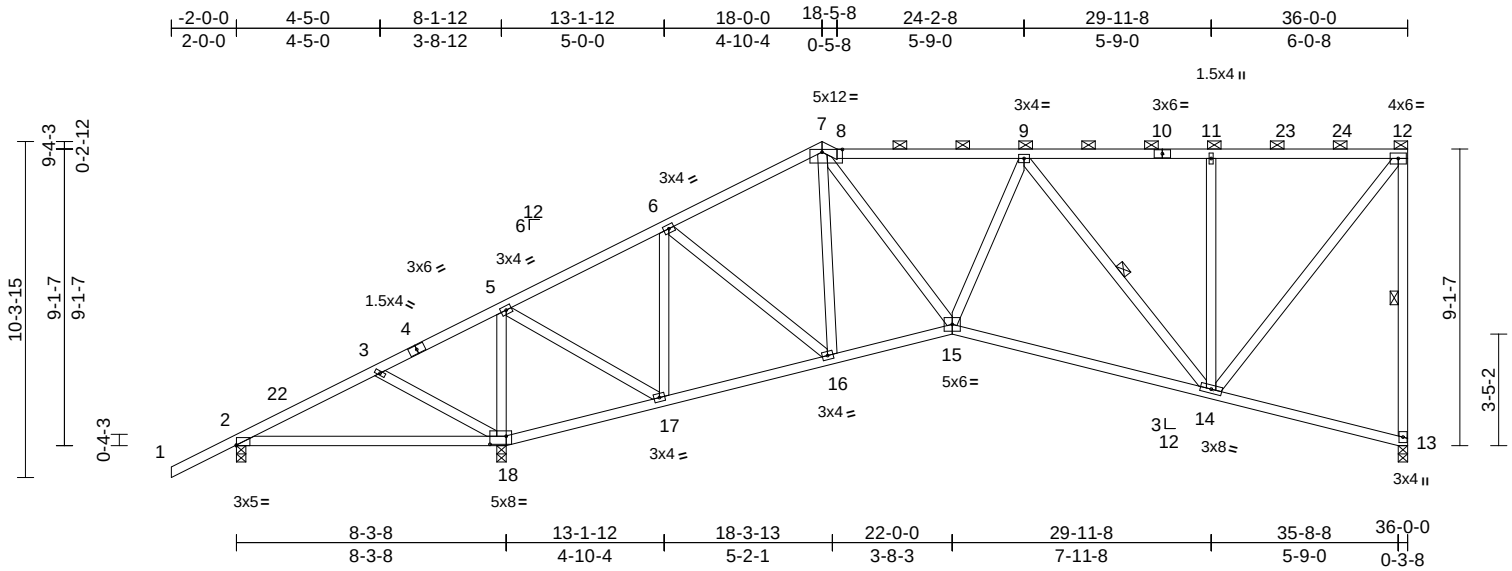

Scale = 1:70.8

Plate Offsets (X, Y): [2:Edge,0-0-4], [7:0-7-8,0-1-0], [18:0-6-0,0-3-0]

Loading	(psf)	Spacing	2-0-0	CSI		DEFL	in	(loc)	l/defl	L/d	PLATES	GRIP
TCLL (roof)	20.0	Plate Grip DOL	1.25	TC	0.88	Vert(LL)	-0.13	14-15	>999	240	MT20	244/190
TCDL	7.0	Lumber DOL	1.25	BC	0.52	Vert(CT)	-0.24	14-15	>999	180		
BCLL	0.0*	Rep Stress Incr	YES	WB	0.64	Horz(CT)	0.06	13	n/a	n/a		
BCDL	7.0	Code	FBC2023/TPI2014	Matrix-MS							Weight: 230 lb	FT = 20%

LUMBER
TOP CHORD 2x4 SP No.2
BOT CHORD 2x4 SP No.2
WEBS 2x4 SP No.2

BRACING
TOP CHORD Structural wood sheathing directly applied or 5-11-12 oc purlins, except end verticals, and 2-0-0 oc purlins (5-0-13 max.): 8-12.
BOT CHORD Structural wood sheathing directly applied or 6-0-0 oc bracing.
WEBS 1 Row at midpt 12-13, 9-14

REACTIONS (size) 2=0-3-8, 13=0-3-8, 18=0-3-8
Max Horiz 2=436 (LC 11)
Max Uplift 2=-113 (LC 24), 13=-258 (LC 9), 18=-479 (LC 12)
Max Grav 2=212 (LC 23), 13=840 (LC 1), 18=1627 (LC 1)

FORCES (lb) - Maximum Compression/Maximum Tension
TOP CHORD 1-2=0/48, 2-3=-588/619, 3-5=-662/769, 5-6=-409/220, 6-7=-807/342, 7-8=-798/339, 8-9=-930/403, 9-11=-543/331, 11-12=-543/331, 12-13=-810/434
BOT CHORD 2-18=-438/256, 17-18=-678/318, 16-17=-424/470, 15-16=-582/770, 14-15=-644/933, 13-14=-193/213
WEBS 3-18=-274/152, 5-18=-1252/703, 5-17=-579/1103, 6-17=-724/460, 6-16=-211/473, 7-15=-171/482, 9-15=-121/196, 9-14=-571/367, 11-14=-330/244, 12-14=-411/861, 7-16=-322/205

NOTES
1) Unbalanced roof live loads have been considered for this design.
2) Wind: ASCE 7-22; Vult=130mph (3-second gust) Vasd=101mph; TCDL=4.2psf; BCDL=4.2psf; h=18ft; B=50ft; L=36ft; eave=5ft; Cat. II; Exp C; Enclosed; MWFRS (directional) and C-C Zone3 -2-0-0 to 1-7-3, Zone1 1-7-3 to 18-0-0, Zone3 18-0-0 to 18-5-8, Zone1 18-5-8 to 35-10-4 zone; cantilever left and right exposed ; end vertical left and right exposed;C-C for members and forces & MWFRS for reactions shown; Lumber DOL=1.60 plate grip DOL=1.60
3) Building Designer / Project engineer responsible for verifying applied roof live load shown covers rain loading requirements specific to the use of this truss component.
4) Provide adequate drainage to prevent water ponding.
5) This truss has been designed for a 10.0 psf bottom chord live load nonconcurrent with any other live loads.
6) * This truss has been designed for a live load of 20.0psf on the bottom chord in all areas where a rectangle 3-06-00 tall by 2-00-00 wide will fit between the bottom chord and any other members.
7) All bearings are assumed to be SP No.2 .
8) Bearing at joint(s) 13 considers parallel to grain value using ANSI/TPI 1 angle to grain formula. Building designer should verify capacity of bearing surface.
9) Provide mechanical connection (by others) of truss to bearing plate capable of withstanding 258 lb uplift at joint 13, 113 lb uplift at joint 2 and 479 lb uplift at joint 18.
10) Graphical purlin representation does not depict the size or the orientation of the purlin along the top and/or bottom chord.

LOAD CASE(S) Standard

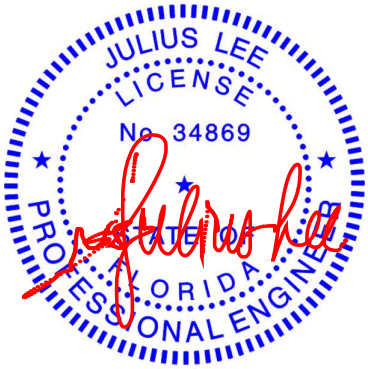

Julius Lee PE No. 34869
MiTek Inc. DBA MiTek USA FL Cert 6634
16023 Swingley Ridge Rd. Chesterfield, MO 63017
Date:

June 23,2025

WARNING - Verify design parameters and READ NOTES ON THIS AND INCLUDED MITEK REFERENCE PAGE MII-7473 rev. 1/2/2023 BEFORE USE.
Design valid for use only with MiTek® connectors. This design is based only upon parameters shown, and is for an individual building component, not a truss system. Before use, the building designer must verify the applicability of design parameters and properly incorporate this design into the overall building design. Bracing indicated is to prevent buckling of individual truss web and/or chord members only. Additional temporary and permanent bracing is always required for stability and to prevent collapse with possible personal injury and property damage. For general guidance regarding the fabrication, storage, delivery, erection and bracing of trusses and truss systems, see **ANSI/TPI1 Quality Criteria and DSB-22** available from Truss Plate Institute (www.tpinst.org) and **BCSI Building Component Safety Information** available from the Structural Building Component Association (www.sbcscomponents.com)

MiTek®
16023 Swingley Ridge Rd.
Chesterfield, MO 63017
314.434.1200 / MiTek-US.com

Job	Truss	Truss Type	Qty	Ply	Mitch Brown
250620-02KM	T07	Roof Special	1	1	T37696810 Job Reference (optional)

Coastal Truss & Vinyl Siding, Patterson, GA - 31577,

Run: 8.73 S Feb 19 2025 Print: 8.730 S Feb 19 2025 MiTek Industries, Inc. Fri Jun 20 12:42:47 Page: 1
ID:Bzvf9Nd74H_I6aqk6afcyHz4Ocq-RfC?PsB70Hq3NSgPqnL8w3uITXbGKWrCDoi7J4zJC?f

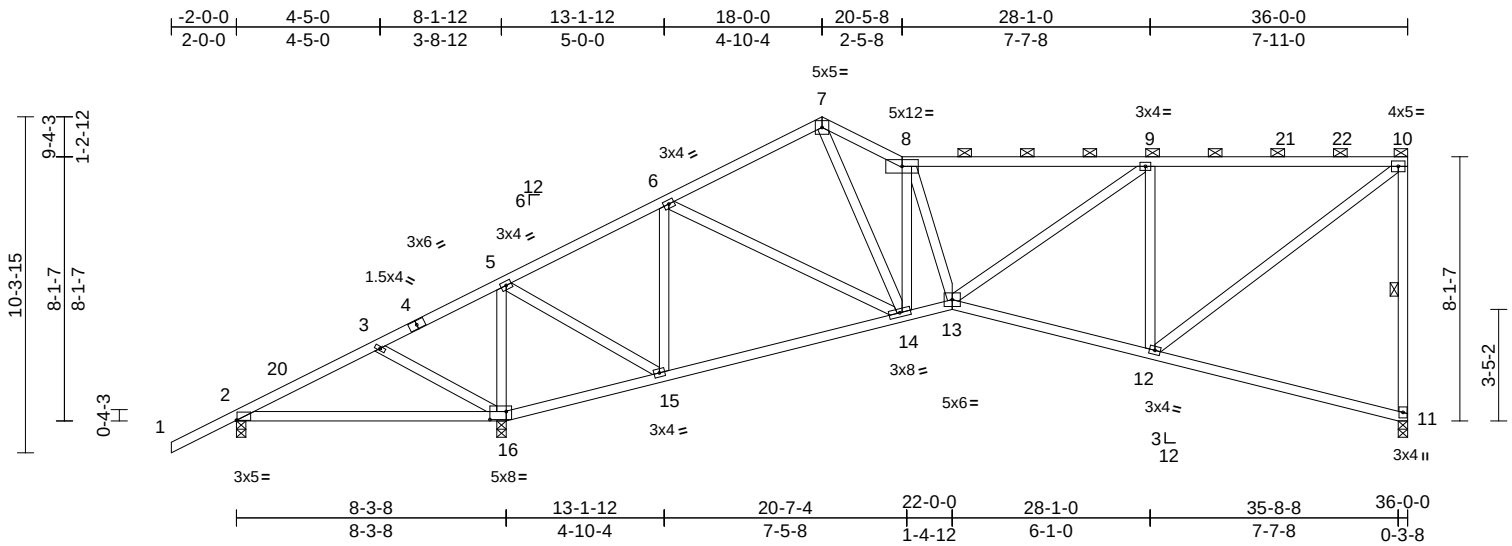

Scale = 1:70.8

Plate Offsets (X, Y): [2:0-0-4,Edge], [16:0-6-0,0-3-0]

Loading	(psf)	Spacing	2-0-0	CSI		DEFL	in	(loc)	l/defl	L/d	PLATES	GRIP
TCLL (roof)	20.0	Plate Grip DOL	1.25	TC	0.73	Vert(LL)	-0.12	16-19	>865	240	MT20	244/190
TCDL	7.0	Lumber DOL	1.25	BC	0.48	Vert(CT)	-0.20	11-12	>999	180		
BCLL	0.0*	Rep Stress Incr	YES	WB	0.77	Horz(CT)	0.06	11	n/a	n/a		
BCDL	7.0	Code	FBC2023/TPI2014	Matrix-MS							Weight: 222 lb	FT = 20%

LUMBER
TOP CHORD 2x4 SP No.2
BOT CHORD 2x4 SP No.2
WEBS 2x4 SP No.2

BRACING
TOP CHORD Structural wood sheathing directly applied or 5-3-5 oc purlins, except end verticals, and 2-0-0 oc purlins (4-7-11 max.): 8-10.
BOT CHORD Structural wood sheathing directly applied or 6-0-0 oc bracing.
WEBS 1 Row at midpt 10-11

REACTIONS (size) 2=0-3-8, 11=0-3-8, 16=0-3-8
Max Horiz 2=416 (LC 11)
Max Uplift 2=-133 (LC 24), 11=-248 (LC 12), 16=-492 (LC 12)
Max Grav 2=185 (LC 23), 11=830 (LC 1), 16=1668 (LC 1)

FORCES (lb) - Maximum Compression/Maximum Tension
TOP CHORD 1-2=0/48, 2-3=-578/635, 3-5=-652/803, 5-6=-380/225, 6-7=-884/387, 7-8=-1180/519, 8-9=-1106/473, 9-10=-816/399, 10-11=-785/432
BOT CHORD 2-16=-487/274, 15-16=-744/374, 14-15=-373/428, 13-14=-687/1043, 12-13=-520/847, 11-12=-174/195
WEBS 3-16=-280/154, 5-16=-1278/700, 5-15=-581/1145, 6-15=-737/472, 6-14=-232/504, 7-14=-299/767, 8-14=-1008/474, 8-13=-141/274, 9-13=-261/369, 9-12=-697/461, 10-12=-467/1009

NOTES
1) Unbalanced roof live loads have been considered for this design.
2) Wind: ASCE 7-22; Vult=130mph (3-second gust) Vasd=101mph; TCDL=4.2psf; BCDL=4.2psf; h=18ft; B=50ft; L=36ft; eave=5ft; Cat. II; Exp C; Enclosed; MWFRS (directional) and C-C Zone3 -2-0-0 to 1-7-3, Zone1 1-7-3 to 18-0-0, Zone3 18-0-0 to 20-5-8, Zone1 20-5-8 to 35-10-4 zone; cantilever left and right exposed ; end vertical left and right exposed;C-C for members and forces & MWFRS for reactions shown; Lumber DOL=1.60 plate grip DOL=1.60
3) Building Designer / Project engineer responsible for verifying applied roof live load shown covers rain loading requirements specific to the use of this truss component.
4) Provide adequate drainage to prevent water ponding.
5) This truss has been designed for a 10.0 psf bottom chord live load nonconcurrent with any other live loads.
6) * This truss has been designed for a live load of 20.0psf on the bottom chord in all areas where a rectangle 3-06-00 tall by 2-00-00 wide will fit between the bottom chord and any other members.
7) All bearings are assumed to be SP No.2 .
8) Bearing at joint(s) 11 considers parallel to grain value using ANSI/TPI 1 angle to grain formula. Building designer should verify capacity of bearing surface.
9) Provide mechanical connection (by others) of truss to bearing plate capable of withstanding 248 lb uplift at joint 11, 133 lb uplift at joint 2 and 492 lb uplift at joint 16.
10) Graphical purlin representation does not depict the size or the orientation of the purlin along the top and/or bottom chord.

LOAD CASE(S) Standard

Julius Lee PE No. 34869
MiTek Inc. DBA MiTek USA FL Cert 6634
16023 Swingley Ridge Rd. Chesterfield, MO 63017
Date:

June 23,2025

WARNING - Verify design parameters and READ NOTES ON THIS AND INCLUDED MITEK REFERENCE PAGE MII-7473 rev. 1/2/2023 BEFORE USE.
Design valid for use only with MiTek® connectors. This design is based only upon parameters shown, and is for an individual building component, not a truss system. Before use, the building designer must verify the applicability of design parameters and properly incorporate this design into the overall building design. Bracing indicated is to prevent buckling of individual truss web and/or chord members only. Additional temporary and permanent bracing is always required for stability and to prevent collapse with possible personal injury and property damage. For general guidance regarding the fabrication, storage, delivery, erection and bracing of trusses and truss systems, see **ANSI/TPI1 Quality Criteria and DSB-22** available from Truss Plate Institute (www.tpinst.org) and **BCSI Building Component Safety Information** available from the Structural Building Component Association (www.sbcscomponents.com)

MiTek®
16023 Swingley Ridge Rd.
Chesterfield, MO 63017
314.434.1200 / MiTek-US.com

Job	Truss	Truss Type	Qty	Ply	Mitch Brown
250620-02KM	T08	Roof Special	1	1	T37696811 Job Reference (optional)

Coastal Truss & Vinyl Siding, Patterson, GA - 31577,

Run: 8.73 S Feb 19 2025 Print: 8.730 S Feb 19 2025 MiTek Industries, Inc. Fri Jun 20 12:42:47 Page: 1
ID:fAT2Niemra69kkPwgHArUUz4Ocp-RfC?PsB70Hq3NSgPqnL8w3uITXbGKWrCDoi7J4zJC?f

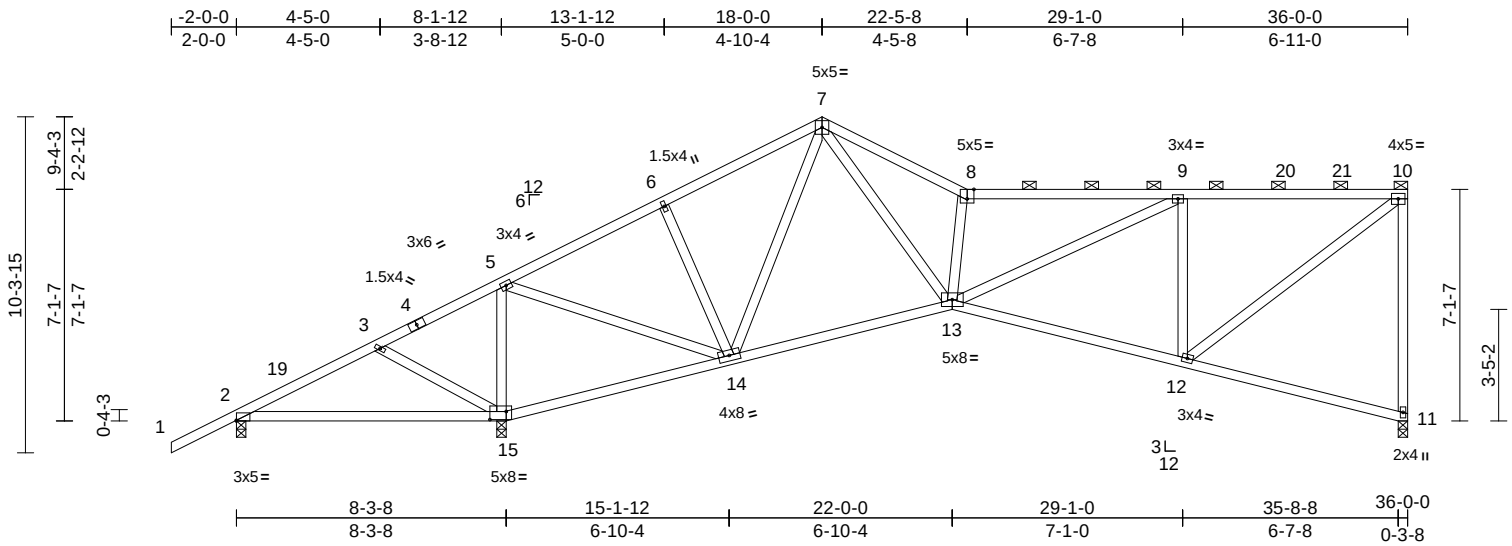

Scale = 1:70.8

Plate Offsets (X, Y): [2:Edge,0-0-4], [8:0-2-8,Edge], [15:0-6-0,0-3-0]

Loading	(psf)	Spacing	2-0-0	CSI		DEFL	in	(loc)	l/defl	L/d	PLATES	GRIP
TCLL (roof)	20.0	Plate Grip DOL	1.25	TC	0.69	Vert(LL)	-0.11	15-18	>909	240	MT20	244/190
TCDL	7.0	Lumber DOL	1.25	BC	0.45	Vert(CT)	-0.19	15-18	>534	180		
BCLL	0.0*	Rep Stress Incr	YES	WB	0.67	Horz(CT)	0.08	11	n/a	n/a		
BCDL	7.0	Code	FBC2023/TPI2014	Matrix-MS							Weight: 212 lb	FT = 20%

LUMBER
TOP CHORD 2x4 SP No.2
BOT CHORD 2x4 SP No.2
WEBS 2x4 SP No.2

BRACING
TOP CHORD Structural wood sheathing directly applied or 4-6-5 oc purlins, except end verticals, and 2-0-0 oc purlins (4-4-2 max.): 8-10.
BOT CHORD Structural wood sheathing directly applied or 6-0-0 oc bracing.

REACTIONS (size) 2=0-3-8, 11=0-3-8, 15=0-3-8
Max Horiz 2=396 (LC 11)
Max Uplift 2=-194 (LC 24), 11=-241 (LC 12), 15=-514 (LC 12)
Max Grav 2=155 (LC 23), 11=811 (LC 1), 15=1752 (LC 1)

FORCES (lb) - Maximum Compression/Maximum Tension
TOP CHORD 1-2=0/48, 2-3=-595/705, 3-5=-671/935, 5-6=-596/308, 6-7=-489/335, 7-8=-1515/661, 8-9=-1433/602, 9-10=-826/404, 10-11=-773/406
BOT CHORD 2-15=-598/316, 14-15=-879/462, 13-14=-463/629, 12-13=-490/862, 11-12=-154/173
WEBS 3-15=-280/155, 5-15=-1316/717, 5-14=-708/1396, 6-14=-272/236, 7-14=-490/258, 7-13=-539/1298, 8-13=-927/492, 9-13=-383/673, 9-12=-715/439, 10-12=-447/1025

NOTES
1) Unbalanced roof live loads have been considered for this design.
2) Wind: ASCE 7-22; Vult=130mph (3-second gust) Vasd=101mph; TCDL=4.2psf; BCDL=4.2psf; h=18ft; B=50ft; L=36ft; eave=5ft; Cat. II; Exp C; Enclosed; MWFRS (directional) and C-C Zone3 -2-0-0 to 1-7-3, Zone1 1-7-3 to 18-0-0, Zone3 18-0-0 to 22-5-8, Zone1 22-5-8 to 35-10-4 zone; cantilever left and right exposed ; end vertical left and right exposed;C-C for members and forces & MWFRS for reactions shown; Lumber DOL=1.60 plate grip DOL=1.60
3) Building Designer / Project engineer responsible for verifying applied roof live load shown covers rain loading requirements specific to the use of this truss component.
4) Provide adequate drainage to prevent water ponding.
5) This truss has been designed for a 10.0 psf bottom chord live load nonconcurrent with any other live loads.
6) * This truss has been designed for a live load of 20.0psf on the bottom chord in all areas where a rectangle 3-06-00 tall by 2-00-00 wide will fit between the bottom chord and any other members.
7) All bearings are assumed to be SP No.2 .
8) Bearing at joint(s) 11 considers parallel to grain value using ANSI/TPI 1 angle to grain formula. Building designer should verify capacity of bearing surface.
9) Provide mechanical connection (by others) of truss to bearing plate capable of withstanding 241 lb uplift at joint 11, 194 lb uplift at joint 2 and 514 lb uplift at joint 15.
10) Graphical purlin representation does not depict the size or the orientation of the purlin along the top and/or bottom chord.

LOAD CASE(S) Standard

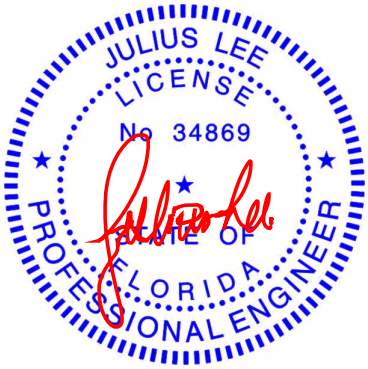

Julius Lee PE No. 34869
MiTek Inc. DBA MiTek USA FL Cert 6634
16023 Swingley Ridge Rd. Chesterfield, MO 63017

Date:

June 23,2025

WARNING - Verify design parameters and READ NOTES ON THIS AND INCLUDED MITEK REFERENCE PAGE MII-7473 rev. 1/2/2023 BEFORE USE.
Design valid for use only with MiTek® connectors. This design is based only upon parameters shown, and is for an individual building component, not a truss system. Before use, the building designer must verify the applicability of design parameters and properly incorporate this design into the overall building design. Bracing indicated is to prevent buckling of individual truss web and/or chord members only. Additional temporary and permanent bracing is always required for stability and to prevent collapse with possible personal injury and property damage. For general guidance regarding the fabrication, storage, delivery, erection and bracing of trusses and truss systems, see **ANSI/TPI1 Quality Criteria and DSB-22** available from Truss Plate Institute (www.tpinst.org) and **BCSI Building Component Safety Information** available from the Structural Building Component Association (www.sbcscomponents.com)

MiTek®
16023 Swingley Ridge Rd.
Chesterfield, MO 63017
314.434.1200 / MiTek-US.com

Job	Truss	Truss Type	Qty	Ply	Mitch Brown
250620-02KM	T09	Roof Special	1	1	T37696812 Job Reference (optional)

Coastal Truss & Vinyl Siding, Patterson, GA - 31577,

Run: 8.73 S Feb 19 2025 Print: 8.730 S Feb 19 2025 MiTek Industries, Inc. Fri Jun 20 12:42:47 Page: 1
ID:fAT2Niemra69kkPwgHArUUz4Ocp-RfC?PsB70Hq3NSgPqnL8w3uITXbGKWrCDoi7J4zJC?f

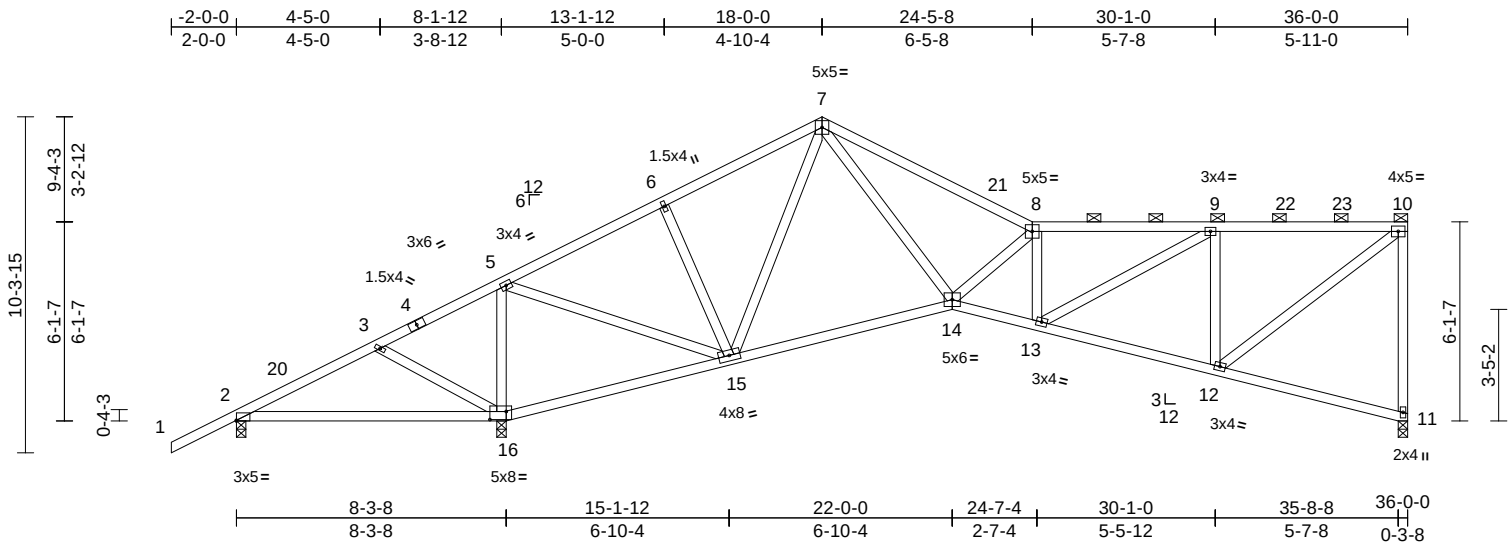

Scale = 1:70.8

Plate Offsets (X, Y): [2:Edge,0-0-4], [16:0-6-0,0-3-0]

Loading	(psf)	Spacing	2-0-0	CSI		DEFL	in	(loc)	l/defl	L/d	PLATES	GRIP
TCLL (roof)	20.0	Plate Grip DOL	1.25	TC	0.66	Vert(LL)	-0.11	16-19	>907	240	MT20	244/190
TCDL	7.0	Lumber DOL	1.25	BC	0.40	Vert(CT)	-0.19	16-19	>533	180		
BCLL	0.0*	Rep Stress Incr	YES	WB	0.65	Horz(CT)	0.09	11	n/a	n/a		
BCDL	7.0	Code	FBC2023/TPI2014	Matrix-MS							Weight: 210 lb	FT = 20%

LUMBER
TOP CHORD 2x4 SP No.2
BOT CHORD 2x4 SP No.2
WEBS 2x4 SP No.2

BRACING
TOP CHORD Structural wood sheathing directly applied or 3-6-3 oc purlins, except end verticals, and 2-0-0 oc purlins (4-4-12 max.): 8-10.
BOT CHORD Structural wood sheathing directly applied or 6-0-0 oc bracing.

REACTIONS (size) 2=0-3-8, 11=0-3-8, 16=0-3-8
Max Horiz 2=376 (LC 11)
Max Uplift 2=-217 (LC 24), 11=-239 (LC 12), 16=-517 (LC 12)
Max Grav 2=143 (LC 23), 11=804 (LC 1), 16=1783 (LC 1)

FORCES (lb) - Maximum Compression/Maximum Tension
TOP CHORD 1-2=0/48, 2-3=-567/741, 3-5=-642/987, 5-6=-566/284, 6-7=-459/312, 7-8=-1452/622, 8-9=-1582/607, 9-10=-844/392, 10-11=-770/389
BOT CHORD 2-16=-643/298, 15-16=-927/442, 14-15=-412/580, 13-14=-831/1663, 12-13=-469/876, 11-12=-134/149
WEBS 3-16=-280/154, 5-16=-1336/707, 5-15=-692/1416, 6-15=-265/228, 7-15=-516/258, 7-14=-481/1187, 8-14=-534/326, 8-13=-555/307, 9-13=-389/844, 9-12=-756/421, 10-12=-441/1050

NOTES
1) Unbalanced roof live loads have been considered for this design.
2) Wind: ASCE 7-22; Vult=130mph (3-second gust) Vasd=101mph; TCDL=4.2psf; BCDL=4.2psf; h=18ft; B=50ft; L=36ft; eave=5ft; Cat. II; Exp C; Enclosed; MWFRS (directional) and C-C Zone3 -2-0-0 to 1-7-3, Zone1 1-7-3 to 18-0-0, Zone2 18-0-0 to 23-1-2, Zone1 23-1-2 to 35-10-4 zone; cantilever left and right exposed ; end vertical left and right exposed;C-C for members and forces & MWFRS for reactions shown; Lumber DOL=1.60 plate grip DOL=1.60
3) Building Designer / Project engineer responsible for verifying applied roof live load shown covers rain loading requirements specific to the use of this truss component.
4) Provide adequate drainage to prevent water ponding.
5) This truss has been designed for a 10.0 psf bottom chord live load nonconcurrent with any other live loads.
6) * This truss has been designed for a live load of 20.0psf on the bottom chord in all areas where a rectangle 3-06-00 tall by 2-00-00 wide will fit between the bottom chord and any other members.
7) All bearings are assumed to be SP No.2 .
8) Bearing at joint(s) 11 considers parallel to grain value using ANSI/TPI 1 angle to grain formula. Building designer should verify capacity of bearing surface.
9) Provide mechanical connection (by others) of truss to bearing plate capable of withstanding 239 lb uplift at joint 11, 217 lb uplift at joint 2 and 517 lb uplift at joint 16.
10) Graphical purlin representation does not depict the size or the orientation of the purlin along the top and/or bottom chord.

LOAD CASE(S) Standard

Julius Lee PE No. 34869
MiTek Inc. DBA MiTek USA FL Cert 6634
16023 Swingley Ridge Rd. Chesterfield, MO 63017

Date:

June 23,2025

WARNING - Verify design parameters and READ NOTES ON THIS AND INCLUDED MITEK REFERENCE PAGE MII-7473 rev. 1/2/2023 BEFORE USE.
Design valid for use only with MiTek® connectors. This design is based only upon parameters shown, and is for an individual building component, not a truss system. Before use, the building designer must verify the applicability of design parameters and properly incorporate this design into the overall building design. Bracing indicated is to prevent buckling of individual truss web and/or chord members only. Additional temporary and permanent bracing is always required for stability and to prevent collapse with possible personal injury and property damage. For general guidance regarding the fabrication, storage, delivery, erection and bracing of trusses and truss systems, see **ANSI/TPI1 Quality Criteria and DSB-22** available from Truss Plate Institute (www.tpinst.org) and **BCSI Building Component Safety Information** available from the Structural Building Component Association (www.sbcscomponents.com)

MiTek®
16023 Swingley Ridge Rd.
Chesterfield, MO 63017
314.434.1200 / MiTek-US.com

Job	Truss	Truss Type	Qty	Ply	Mitch Brown
250620-02KM	T10	Roof Special	1	1	T37696813 Job Reference (optional)

Coastal Truss & Vinyl Siding, Patterson, GA - 31577,

Run: 8.73 S Feb 19 2025 Print: 8.730 S Feb 19 2025 MiTek Industries, Inc. Fri Jun 20 12:42:47 Page: 1
ID:fAT2Niemra69kkPwgHArUUz4Ocp-RfC?PsB70Hq3NSgPqnL8w3uITXbGKWrCDoi7J4zJC?f

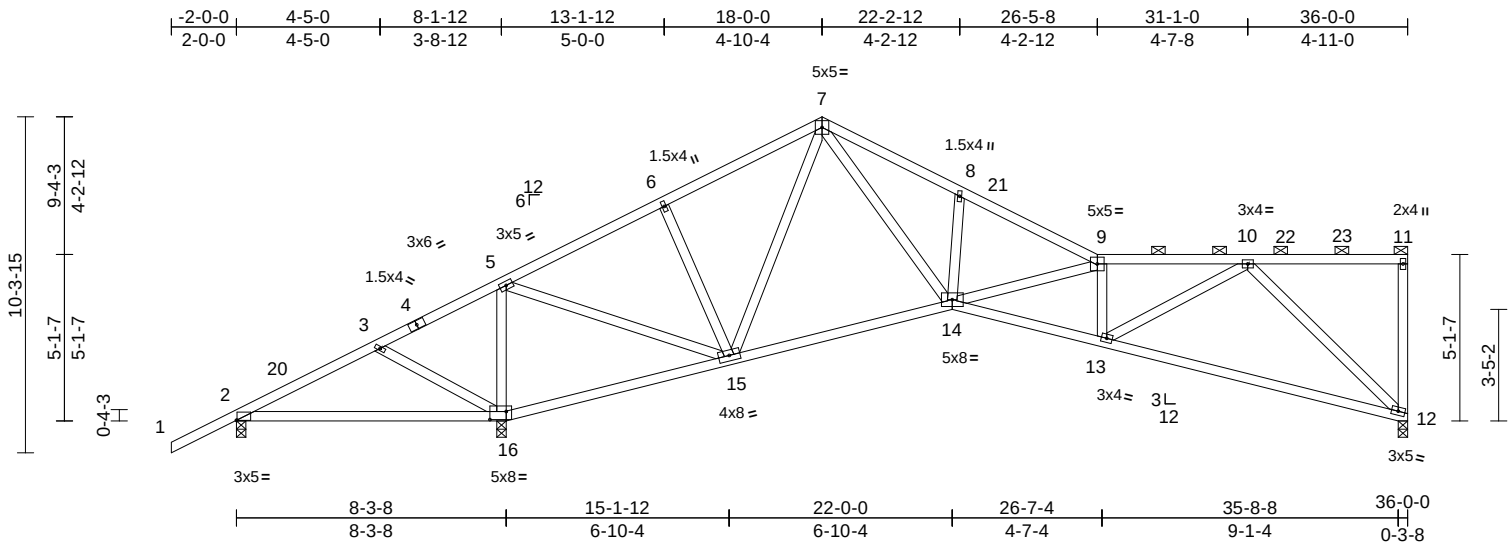

Scale = 1:70.8

Plate Offsets (X, Y): [2:0-0-4,Edge], [16:0-6-0,0-3-0]

Loading	(psf)	Spacing	2-0-0	CSI		DEFL	in	(loc)	l/defl	L/d	PLATES	GRIP
TCLL (roof)	20.0	Plate Grip DOL	1.25	TC	0.53	Vert(LL)	-0.24	12-13	>999	240	MT20	244/190
TCDL	7.0	Lumber DOL	1.25	BC	0.70	Vert(CT)	-0.43	12-13	>771	180		
BCLL	0.0*	Rep Stress Incr	YES	WB	0.93	Horz(CT)	0.11	12	n/a	n/a		
BCDL	7.0	Code	FBC2023/TPI2014	Matrix-MS							Weight: 206 lb	FT = 20%

LUMBER
TOP CHORD 2x4 SP No.2
BOT CHORD 2x4 SP No.2
WEBS 2x4 SP No.2

BRACING
TOP CHORD Structural wood sheathing directly applied or 4-8-11 oc purlins, except end verticals, and 2-0-0 oc purlins (4-3-1 max.): 9-11.
BOT CHORD Structural wood sheathing directly applied or 5-9-1 oc bracing.

REACTIONS (size) 2=0-3-8, 12=0-3-8, 16=0-3-8
Max Horiz 2=356 (LC 11)
Max Uplift 2=-260 (LC 24), 12=-235 (LC 12), 16=-530 (LC 12)
Max Grav 2=121 (LC 23), 12=790 (LC 1), 16=1842 (LC 1)

FORCES (lb) - Maximum Compression/Maximum Tension
TOP CHORD 1-2=0/48, 2-3=-560/839, 3-5=-636/1087, 5-6=-515/268, 6-7=-409/296, 7-8=-1443/688, 8-9=-1451/605, 9-10=-1766/630, 10-11=-128/122, 11-12=-110/102
BOT CHORD 2-16=-727/320, 15-16=-1021/467, 14-15=-334/521, 13-14=-809/1863, 12-13=-473/870
WEBS 3-16=-282/155, 5-16=-1370/700, 5-15=-687/1467, 6-15=-272/238, 7-15=-531/245, 7-14=-561/1283, 8-14=-263/241, 9-14=-573/244, 9-13=-662/333, 10-13=-350/1079, 10-12=-1157/537

NOTES
1) Unbalanced roof live loads have been considered for this design.
2) Wind: ASCE 7-22; Vult=130mph (3-second gust) Vasd=101mph; TCDL=4.2psf; BCDL=4.2psf; h=18ft; B=50ft; L=36ft; eave=5ft; Cat. II; Exp C; Enclosed; MWFRS (directional) and C-C Zone3 -2-0-0 to 1-7-3, Zone1 1-7-3 to 18-0-0, Zone2 18-0-0 to 23-1-2, Zone1 23-1-2 to 35-10-4 zone; cantilever left and right exposed ; end vertical left and right exposed;C-C for members and forces & MWFRS for reactions shown; Lumber DOL=1.60 plate grip DOL=1.60
3) Building Designer / Project engineer responsible for verifying applied roof live load shown covers rain loading requirements specific to the use of this truss component.
4) Provide adequate drainage to prevent water ponding.
5) This truss has been designed for a 10.0 psf bottom chord live load nonconcurrent with any other live loads.
6) * This truss has been designed for a live load of 20.0psf on the bottom chord in all areas where a rectangle 3-06-00 tall by 2-00-00 wide will fit between the bottom chord and any other members.
7) All bearings are assumed to be SP No.2 .
8) Bearing at joint(s) 12 considers parallel to grain value using ANSI/TPI 1 angle to grain formula. Building designer should verify capacity of bearing surface.
9) Provide mechanical connection (by others) of truss to bearing plate capable of withstanding 235 lb uplift at joint 12, 260 lb uplift at joint 2 and 530 lb uplift at joint 16.
10) Graphical purlin representation does not depict the size or the orientation of the purlin along the top and/or bottom chord.

LOAD CASE(S) Standard

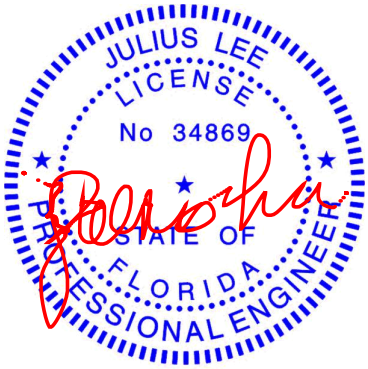

Julius Lee PE No. 34869
MiTek Inc. DBA MiTek USA FL Cert 6634
16023 Swingley Ridge Rd. Chesterfield, MO 63017

Date:

June 23,2025

WARNING - Verify design parameters and READ NOTES ON THIS AND INCLUDED MITEK REFERENCE PAGE MII-7473 rev. 1/2/2023 BEFORE USE.
Design valid for use only with MiTek® connectors. This design is based only upon parameters shown, and is for an individual building component, not a truss system. Before use, the building designer must verify the applicability of design parameters and properly incorporate this design into the overall building design. Bracing indicated is to prevent buckling of individual truss web and/or chord members only. Additional temporary and permanent bracing is always required for stability and to prevent collapse with possible personal injury and property damage. For general guidance regarding the fabrication, storage, delivery, erection and bracing of trusses and truss systems, see **ANSI/TPI1 Quality Criteria and DSB-22** available from Truss Plate Institute (www.tpinst.org) and **BCSI Building Component Safety Information** available from the Structural Building Component Association (www.sbcscomponents.com)

MiTek®
16023 Swingley Ridge Rd.
Chesterfield, MO 63017
314.434.1200 / MiTek-US.com

Job	Truss	Truss Type	Qty	Ply	Mitch Brown
250620-02KM	T11	Roof Special	1	1	T37696814 Job Reference (optional)

Coastal Truss & Vinyl Siding, Patterson, GA - 31577,

Run: 8.73 S Feb 19 2025 Print: 8.730 S Feb 19 2025 MiTek Industries, Inc. Fri Jun 20 12:42:48 Page: 1
ID:7M1Qa2fOcuE0Lu_7E_h41iz4Oco-RfC?PsB70Hq3NSgPqnL8w3uITXbGKWrCDoi7J4zJC?f

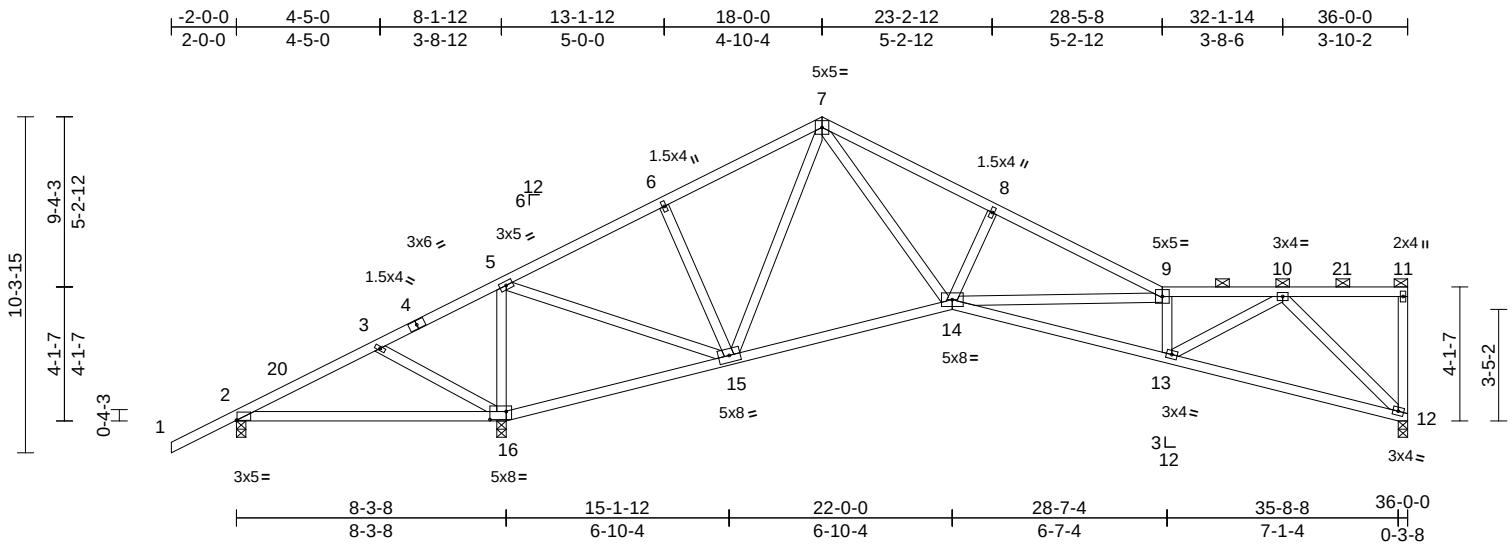

Scale = 1:70.8

Plate Offsets (X, Y): [2:0-0-4,Edge], [16:0-6-0,0-3-0]

Loading	(psf)	Spacing	2-0-0	CSI		DEFL	in	(loc)	l/defl	L/d	PLATES	GRIP
TCLL (roof)	20.0	Plate Grip DOL	1.25	TC	0.54	Vert(LL)	-0.13	13-14	>999	240	MT20	244/190
TCDL	7.0	Lumber DOL	1.25	BC	0.60	Vert(CT)	-0.24	13-14	>999	180		
BCLL	0.0*	Rep Stress Incr	YES	WB	0.64	Horz(CT)	0.12	12	n/a	n/a		
BCDL	7.0	Code	FBC2023/TPI2014	Matrix-MS							Weight: 203 lb	FT = 20%

LUMBER
TOP CHORD 2x4 SP No.2
BOT CHORD 2x4 SP No.2
WEBS 2x4 SP No.2

BRACING
TOP CHORD Structural wood sheathing directly applied or 4-5-15 oc purlins, except end verticals, and 2-0-0 oc purlins (4-2-2 max.): 9-11.
BOT CHORD Structural wood sheathing directly applied or 5-6-9 oc bracing.

REACTIONS (size) 2=0-3-8, 12=0-3-8, 16=0-3-8
Max Horiz 2=336 (LC 11)
Max Uplift 2=-297 (LC 24), 12=-231 (LC 12), 16=-544 (LC 12)
Max Grav 2=102 (LC 23), 12=778 (LC 1), 16=1894 (LC 1)

FORCES (lb) - Maximum Compression/Maximum Tension
TOP CHORD 1-2=0/48, 2-3=-546/927, 3-5=-621/1176, 5-6=-467/250, 6-7=-361/278, 7-8=-1393/647, 8-9=-1502/616, 9-10=-1915/682, 10-11=-102/98, 11-12=-87/83
BOT CHORD 2-16=-804/345, 15-16=-1104/494, 14-15=-258/496, 13-14=-837/2043, 12-13=-444/866
WEBS 3-16=-283/155, 5-16=-1401/689, 5-15=-672/1506, 6-15=-272/236, 7-15=-564/235, 7-14=-513/1232, 8-14=-311/267, 9-14=-680/280, 9-13=-811/369, 10-12=-1177/527, 10-13=-404/1254

NOTES
1) Unbalanced roof live loads have been considered for this design.
2) Wind: ASCE 7-22; Vult=130mph (3-second gust) Vasd=101mph; TCDL=4.2psf; BCDL=4.2psf; h=18ft; B=50ft; L=36ft; eave=5ft; Cat. II; Exp C; Enclosed; MWFRS (directional) and C-C Zone3 -2-0-0 to 1-7-3, Zone1 1-7-3 to 18-0-0, Zone2 18-0-0 to 23-3-8, Zone1 23-3-8 to 35-10-4 zone; cantilever left and right exposed ; end vertical left and right exposed;C-C for members and forces & MWFRS for reactions shown; Lumber DOL=1.60 plate grip DOL=1.60
3) Building Designer / Project engineer responsible for verifying applied roof live load shown covers rain loading requirements specific to the use of this truss component.
4) Provide adequate drainage to prevent water ponding.
5) This truss has been designed for a 10.0 psf bottom chord live load nonconcurrent with any other live loads.
6) * This truss has been designed for a live load of 20.0psf on the bottom chord in all areas where a rectangle 3-06-00 tall by 2-00-00 wide will fit between the bottom chord and any other members.
7) All bearings are assumed to be SP No.2 .
8) Bearing at joint(s) 12 considers parallel to grain value using ANSI/TPI 1 angle to grain formula. Building designer should verify capacity of bearing surface.
9) Provide mechanical connection (by others) of truss to bearing plate capable of withstanding 231 lb uplift at joint 12, 297 lb uplift at joint 2 and 544 lb uplift at joint 16.
10) Graphical purlin representation does not depict the size or the orientation of the purlin along the top and/or bottom chord.

LOAD CASE(S) Standard

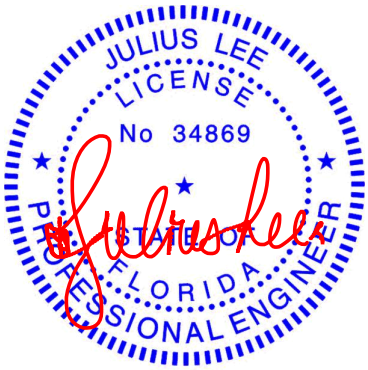

Julius Lee PE No. 34869
MiTek Inc. DBA MiTek USA FL Cert 6634
16023 Swingley Ridge Rd. Chesterfield, MO 63017
Date:

June 23,2025

WARNING - Verify design parameters and READ NOTES ON THIS AND INCLUDED MITEK REFERENCE PAGE MII-7473 rev. 1/2/2023 BEFORE USE.
Design valid for use only with MiTek® connectors. This design is based only upon parameters shown, and is for an individual building component, not a truss system. Before use, the building designer must verify the applicability of design parameters and properly incorporate this design into the overall building design. Bracing indicated is to prevent buckling of individual truss web and/or chord members only. Additional temporary and permanent bracing is always required for stability and to prevent collapse with possible personal injury and property damage. For general guidance regarding the fabrication, storage, delivery, erection and bracing of trusses and truss systems, see **ANSI/TPI1 Quality Criteria and DSB-22** available from Truss Plate Institute (www.tpinst.org) and **BCSI Building Component Safety Information** available from the Structural Building Component Association (www.sbcscomponents.com)

MiTek®
16023 Swingley Ridge Rd.
Chesterfield, MO 63017
314.434.1200 / MiTek-US.com

Job	Truss	Truss Type	Qty	Ply	Mitch Brown
250620-02KM	T12	Roof Special	1	1	T37696815 Job Reference (optional)

Coastal Truss & Vinyl Siding, Patterson, GA - 31577,

Run: 8.73 S Feb 19 2025 Print: 8.730 S Feb 19 2025 MiTek Industries, Inc. Fri Jun 20 12:42:48 Page: 1
ID:7M1Qa2fOcuE0Lu_7E_h41iz4Oco-RfC?PsB70Hq3NSgPqnL8w3uITXbGKWrCDoi7J4zJC?f

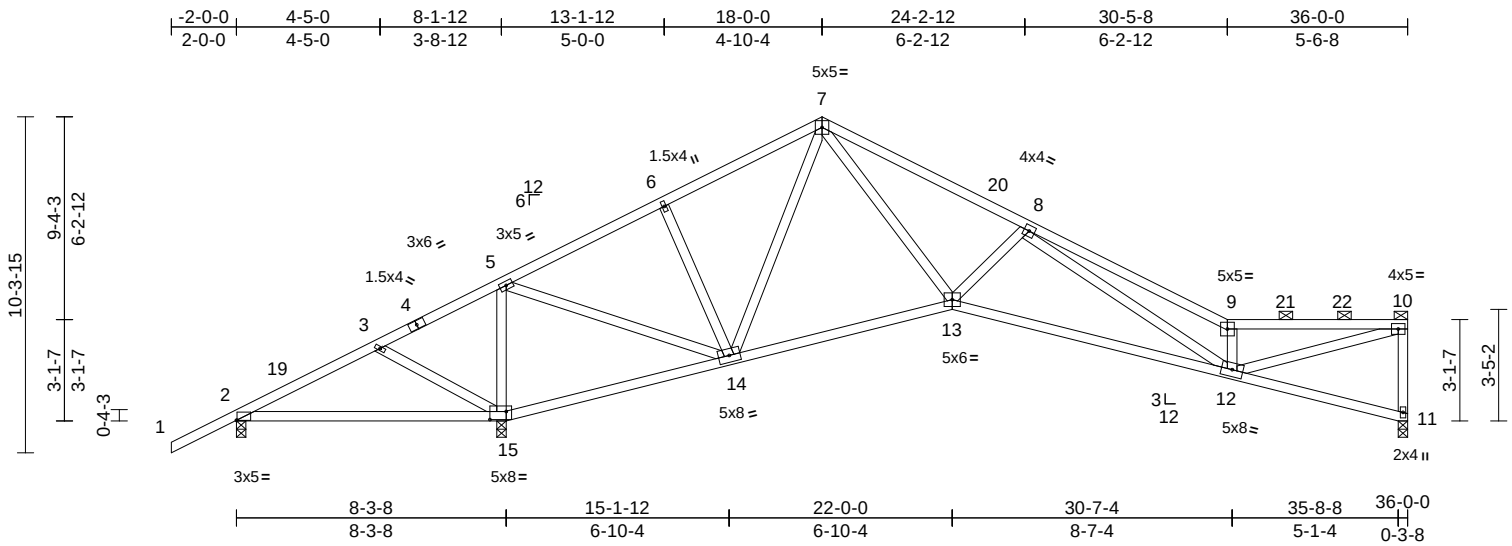

Scale = 1:70.8

Plate Offsets (X, Y): [2:0-0-4,Edge], [15:0-6-0,0-3-0]

Loading	(psf)	Spacing	2-0-0	CSI		DEFL	in	(loc)	l/defl	L/d	PLATES	GRIP
TCLL (roof)	20.0	Plate Grip DOL	1.25	TC	0.58	Vert(LL)	-0.24	12-13	>999	240	MT20	244/190
TCDL	7.0	Lumber DOL	1.25	BC	0.67	Vert(CT)	-0.47	12-13	>706	180		
BCLL	0.0*	Rep Stress Incr	YES	WB	0.68	Horz(CT)	0.12	11	n/a	n/a		
BCDL	7.0	Code	FBC2023/TPI2014	Matrix-MS							Weight: 198 lb	FT = 20%

LUMBER
TOP CHORD 2x4 SP No.2
BOT CHORD 2x4 SP No.2
WEBS 2x4 SP No.2

BRACING
TOP CHORD Structural wood sheathing directly applied or 3-2-4 oc purlins, except end verticals, and 2-0-0 oc purlins (3-6-9 max.): 9-10.
BOT CHORD Structural wood sheathing directly applied or 5-1-1 oc bracing.

REACTIONS (size) 2=0-3-8, 11=0-3-8, 15=0-3-8
Max Horiz 2=316 (LC 11)
Max Uplift 2=-391 (LC 24), 11=-223 (LC 12), 15=-578 (LC 12)
Max Grav 2=54 (LC 23), 11=748 (LC 1), 15=2023 (LC 1)

FORCES (lb) - Maximum Compression/Maximum Tension
TOP CHORD 1-2=0/48, 2-3=-571/1144, 3-5=-647/1395, 5-6=-376/208, 6-7=-270/236, 7-8=-1264/565, 8-9=-2406/891, 9-10=-1975/681, 10-11=-721/342
BOT CHORD 2-15=-991/401, 14-15=-1310/553, 13-14=-163/433, 12-13=-644/1470, 11-12=-72/85
WEBS 3-15=-285/156, 5-15=-1477/689, 5-14=-671/1603, 6-14=-270/233, 7-14=-640/237, 7-13=-437/1144, 8-13=-543/368, 8-12=-315/866, 9-12=-1329/582, 10-12=-732/2023

NOTES
1) Unbalanced roof live loads have been considered for this design.
2) Wind: ASCE 7-22; Vult=130mph (3-second gust) Vasd=101mph; TCDL=4.2psf; BCDL=4.2psf; h=18ft; B=50ft; L=36ft; eave=5ft; Cat. II; Exp C; Enclosed; MWFRS (directional) and C-C Zone3 -2-0-0 to 1-7-3, Zone1 1-7-3 to 18-0-0, Zone2 18-0-0 to 23-1-2, Zone1 23-1-2 to 35-10-4 zone; cantilever left and right exposed ; end vertical left and right exposed;C-C for members and forces & MWFRS for reactions shown; Lumber DOL=1.60 plate grip DOL=1.60
3) Building Designer / Project engineer responsible for verifying applied roof live load shown covers rain loading requirements specific to the use of this truss component.
4) Provide adequate drainage to prevent water ponding.
5) This truss has been designed for a 10.0 psf bottom chord live load nonconcurrent with any other live loads.
6) * This truss has been designed for a live load of 20.0psf on the bottom chord in all areas where a rectangle 3-06-00 tall by 2-00-00 wide will fit between the bottom chord and any other members.
7) All bearings are assumed to be SP No.2 .
8) Bearing at joint(s) 11 considers parallel to grain value using ANSI/TPI 1 angle to grain formula. Building designer should verify capacity of bearing surface.
9) Provide mechanical connection (by others) of truss to bearing plate capable of withstanding 223 lb uplift at joint 11, 391 lb uplift at joint 2 and 578 lb uplift at joint 15.
10) Graphical purlin representation does not depict the size or the orientation of the purlin along the top and/or bottom chord.

LOAD CASE(S) Standard

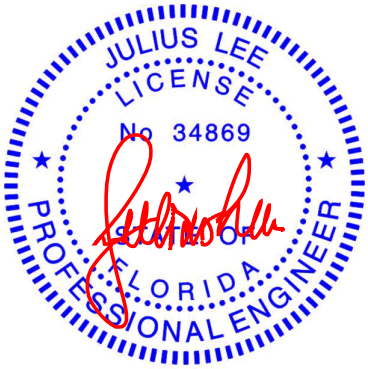

Julius Lee PE No. 34869
MiTek Inc. DBA MiTek USA FL Cert 6634
16023 Swingley Ridge Rd. Chesterfield, MO 63017
Date:

June 23,2025

WARNING - Verify design parameters and READ NOTES ON THIS AND INCLUDED MITEK REFERENCE PAGE MII-7473 rev. 1/2/2023 BEFORE USE.
Design valid for use only with MiTek® connectors. This design is based only upon parameters shown, and is for an individual building component, not a truss system. Before use, the building designer must verify the applicability of design parameters and properly incorporate this design into the overall building design. Bracing indicated is to prevent buckling of individual truss web and/or chord members only. Additional temporary and permanent bracing is always required for stability and to prevent collapse with possible personal injury and property damage. For general guidance regarding the fabrication, storage, delivery, erection and bracing of trusses and truss systems, see **ANSI/TPI1 Quality Criteria and DSB-22** available from Truss Plate Institute (www.tpinst.org) and **BCSI Building Component Safety Information** available from the Structural Building Component Association (www.sbcscomponents.com)

MiTek®
16023 Swingley Ridge Rd.
Chesterfield, MO 63017
314.434.1200 / MiTek-US.com

Job	Truss	Truss Type	Qty	Ply	Mitch Brown
250620-02KM	T13	Roof Special	1	1	T37696816 Job Reference (optional)

Coastal Truss & Vinyl Siding, Patterson, GA - 31577,

Run: 8.73 S Feb 19 2025 Print: 8.730 S Feb 19 2025 MiTek Industries, Inc. Fri Jun 20 12:42:48 Page: 1
ID:bYaooOg0MCMtz2YJoiCJZvz4Ocn-RfC?PsB70Hq3NSgPqnL8w3uITXbGKWrCDoi7J4zJC?f

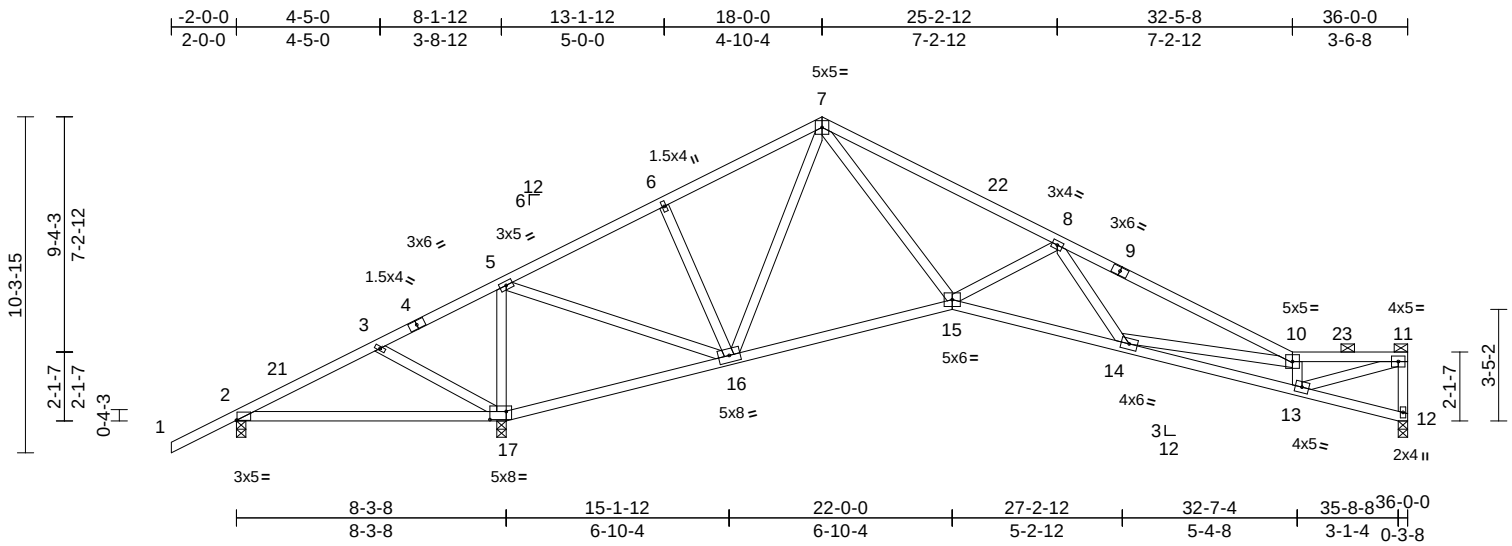

Scale = 1:70.8

Plate Offsets (X, Y): [2:0-0-4,Edge], [17:0-6-0,0-3-0]

Loading	(psf)	Spacing	2-0-0	CSI		DEFL	in	(loc)	l/defl	L/d	PLATES	GRIP
TCLL (roof)	20.0	Plate Grip DOL	1.25	TC	0.73	Vert(LL)	-0.15	13-14	>999	240	MT20	244/190
TCDL	7.0	Lumber DOL	1.25	BC	0.61	Vert(CT)	-0.27	13-14	>999	180		
BCLL	0.0*	Rep Stress Incr	YES	WB	0.68	Horz(CT)	0.13	12	n/a	n/a		
BCDL	7.0	Code	FBC2023/TPI2014	Matrix-MS							Weight: 196 lb	FT = 20%

LUMBER
TOP CHORD 2x4 SP No.2
BOT CHORD 2x4 SP No.2
WEBS 2x4 SP No.2

BRACING
TOP CHORD Structural wood sheathing directly applied or 2-2-0 oc purlins, except end verticals, and 2-0-0 oc purlins (4-1-9 max.): 10-11.
BOT CHORD Structural wood sheathing directly applied or 5-1-2 oc bracing.

REACTIONS (size) 2=0-3-8, 12=0-3-8, 17=0-3-8
Max Horiz 2=296 (LC 11)
Max Uplift 2=-387 (LC 24), 12=-223 (LC 12), 17=-576 (LC 12)
Max Grav 2=56 (LC 23), 12=749 (LC 1), 17=2019 (LC 1)

FORCES (lb) - Maximum Compression/Maximum Tension
TOP CHORD 1-2=0/48, 2-3=-519/1137, 3-5=-594/1387, 5-6=-380/206, 6-7=-274/233, 7-8=-1256/529, 8-10=-1970/700, 10-11=-1987/750, 11-12=-712/324
BOT CHORD 2-17=-991/396, 16-17=-1302/547, 15-16=-94/437, 14-15=-631/1631, 13-14=-914/2224, 12-13=-47/56
WEBS 3-17=-285/155, 5-17=-1476/658, 5-16=-630/1600, 6-16=-267/230, 7-16=-635/215, 7-15=-384/1103, 8-15=-668/400, 8-14=-14/347, 10-14=-478/267, 10-13=-1146/518, 11-13=-800/2056

NOTES
1) Unbalanced roof live loads have been considered for this design.
2) Wind: ASCE 7-22; Vult=130mph (3-second gust) Vasd=101mph; TCDL=4.2psf; BCDL=4.2psf; h=18ft; B=50ft; L=36ft; eave=5ft; Cat. II; Exp C; Enclosed; MWFRS (directional) and C-C Zone3 -2-0-0 to 1-7-3, Zone1 1-7-3 to 18-0-0, Zone2 18-0-0 to 23-1-2, Zone1 23-1-2 to 35-10-4 zone; cantilever left and right exposed ; end vertical left and right exposed;C-C for members and forces & MWFRS for reactions shown; Lumber DOL=1.60 plate grip DOL=1.60
3) Building Designer / Project engineer responsible for verifying applied roof live load shown covers rain loading requirements specific to the use of this truss component.
4) Provide adequate drainage to prevent water ponding.
5) This truss has been designed for a 10.0 psf bottom chord live load nonconcurrent with any other live loads.
6) * This truss has been designed for a live load of 20.0psf on the bottom chord in all areas where a rectangle 3-06-00 tall by 2-00-00 wide will fit between the bottom chord and any other members.
7) All bearings are assumed to be SP No.2 .
8) Bearing at joint(s) 12 considers parallel to grain value using ANSI/TPI 1 angle to grain formula. Building designer should verify capacity of bearing surface.
9) Provide mechanical connection (by others) of truss to bearing plate capable of withstanding 223 lb uplift at joint 12, 387 lb uplift at joint 2 and 576 lb uplift at joint 17.
10) Graphical purlin representation does not depict the size or the orientation of the purlin along the top and/or bottom chord.

LOAD CASE(S) Standard

Julius Lee PE No. 34869
MiTek Inc. DBA MiTek USA FL Cert 6634
16023 Swingley Ridge Rd. Chesterfield, MO 63017

Date:

June 23,2025

WARNING - Verify design parameters and READ NOTES ON THIS AND INCLUDED MITEK REFERENCE PAGE MII-7473 rev. 1/2/2023 BEFORE USE.
Design valid for use only with MiTek® connectors. This design is based only upon parameters shown, and is for an individual building component, not a truss system. Before use, the building designer must verify the applicability of design parameters and properly incorporate this design into the overall building design. Bracing indicated is to prevent buckling of individual truss web and/or chord members only. Additional temporary and permanent bracing is always required for stability and to prevent collapse with possible personal injury and property damage. For general guidance regarding the fabrication, storage, delivery, erection and bracing of trusses and truss systems, see **ANSI/TPI1 Quality Criteria and DSB-22** available from Truss Plate Institute (www.tpinst.org) and **BCSI Building Component Safety Information** available from the Structural Building Component Association (www.sbcscomponents.com)

MiTek®
16023 Swingley Ridge Rd.
Chesterfield, MO 63017
314.434.1200 / MiTek-US.com

Job	Truss	Truss Type	Qty	Ply	Mitch Brown
250620-02KM	T14	Roof Special	2	1	T37696817 Job Reference (optional)

Coastal Truss & Vinyl Siding, Patterson, GA - 31577,

Run: 8.73 S Feb 19 2025 Print: 8.730 S Feb 19 2025 MiTek Industries, Inc. Fri Jun 20 12:42:48 Page: 1
ID:bYaooOg0MCMtz2YJoiCJZvz4Ocn-RfC?PsB70Hq3NSgPqnL8w3uITXbGKWrCDoi7J4zJC?f

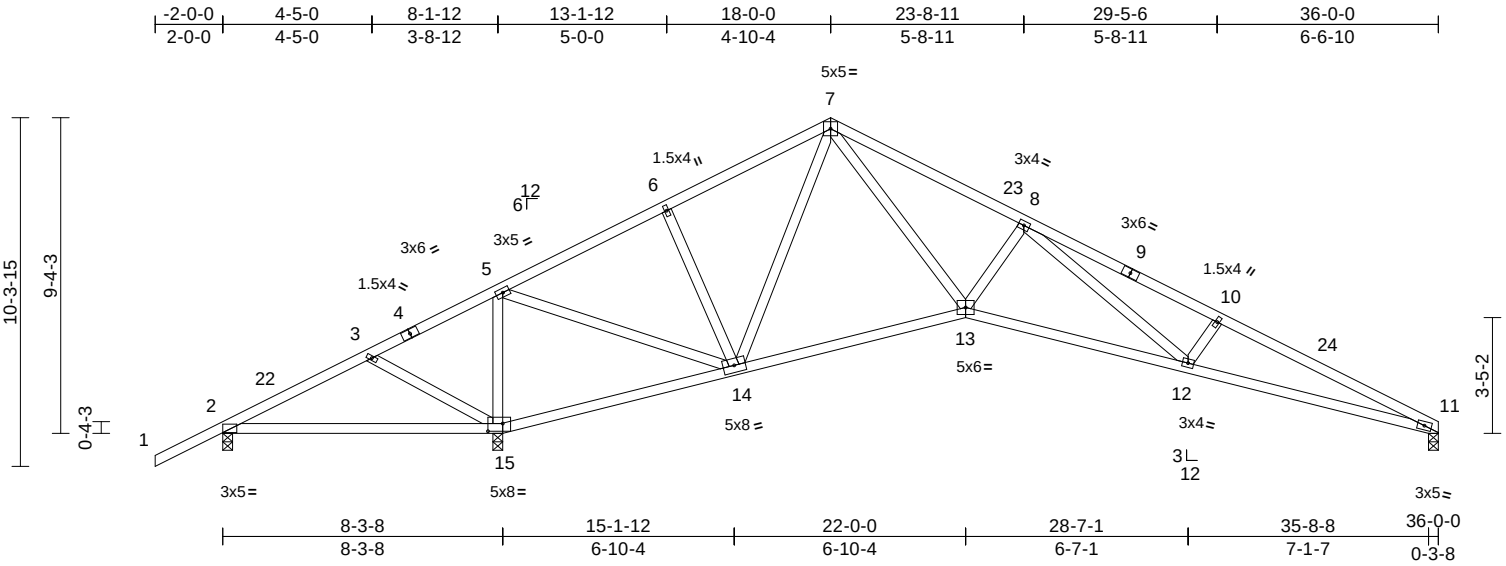

Scale = 1:68.2

Plate Offsets (X, Y): [15:0-5-4,0-2-12]

Loading	(psf)	Spacing	2-0-0	CSI		DEFL	in	(loc)	l/defl	L/d	PLATES	GRIP
TCLL (roof)	20.0	Plate Grip DOL	1.25	TC	0.59	Vert(LL)	-0.17	12-13	>999	240	MT20	244/190
TCDL	7.0	Lumber DOL	1.25	BC	0.61	Vert(CT)	-0.31	12-13	>999	180		
BCLL	0.0*	Rep Stress Incr	YES	WB	0.69	Horz(CT)	0.13	11	n/a	n/a		
BCDL	7.0	Code	FBC2023/TPI2014	Matrix-MS							Weight: 186 lb	FT = 20%

LUMBER
TOP CHORD 2x4 SP No.2
BOT CHORD 2x4 SP No.2
WEBS 2x4 SP No.2

BRACING
TOP CHORD Structural wood sheathing directly applied or 3-4-5 oc purlins.
BOT CHORD Structural wood sheathing directly applied or 5-0-2 oc bracing.

REACTIONS (size) 2=0-3-8, 11=0-3-8, 15=0-3-8
Max Horiz 2=258 (LC 11)
Max Uplift 2=-407 (LC 24), 11=-225 (LC 12), 15=-576 (LC 12)
Max Grav 2=44 (LC 23), 11=748 (LC 1), 15=2053 (LC 1)

FORCES (lb) - Maximum Compression/Maximum Tension
TOP CHORD 1-2=0/48, 2-3=-355/1187, 3-5=-430/1438, 5-6=-368/199, 6-7=-263/230, 7-8=-1250/512, 8-10=-2191/882, 10-11=-2356/885
BOT CHORD 2-15=-1033/402, 14-15=-1350/556, 13-14=0/430, 12-13=-336/1373, 11-12=-714/2127
WEBS 3-15=-286/153, 5-15=-1497/565, 5-14=-512/1629, 6-14=-271/235, 7-14=-649/182, 7-13=-370/1158, 8-13=-539/344, 8-12=-384/821, 10-12=-298/234

NOTES
1) Unbalanced roof live loads have been considered for this design.
2) Wind: ASCE 7-22; Vult=130mph (3-second gust) Vasd=101mph; TCDL=4.2psf; BCDL=4.2psf; h=18ft; B=50ft; L=36ft; eave=5ft; Cat. II; Exp C; Enclosed; MWFRS (directional) and C-C Zone3 -2-0-0 to 1-7-3, Zone1 1-7-3 to 18-0-0, Zone2 18-0-0 to 23-1-2, Zone1 23-1-2 to 36-0-0 zone; cantilever left and right exposed ; end vertical left and right exposed;C-C for members and forces & MWFRS for reactions shown; Lumber DOL=1.60 plate grip DOL=1.60
3) Building Designer / Project engineer responsible for verifying applied roof live load shown covers rain loading requirements specific to the use of this truss component.
4) This truss has been designed for a 10.0 psf bottom chord live load nonconcurrent with any other live loads.
5) * This truss has been designed for a live load of 20.0psf on the bottom chord in all areas where a rectangle 3-06-00 tall by 2-00-00 wide will fit between the bottom chord and any other members.
6) All bearings are assumed to be SP No.2 .
7) Bearing at joint(s) 11 considers parallel to grain value using ANSI/TPI 1 angle to grain formula. Building designer should verify capacity of bearing surface.
8) Provide mechanical connection (by others) of truss to bearing plate capable of withstanding 407 lb uplift at joint 2, 576 lb uplift at joint 15 and 225 lb uplift at joint 11.

LOAD CASE(S) Standard

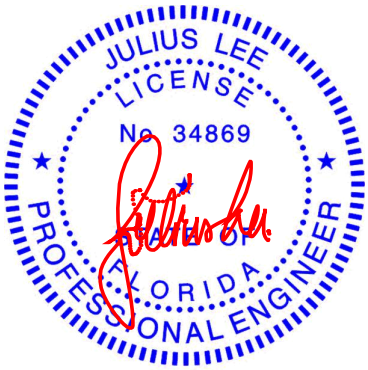

Julius Lee PE No. 34869
MiTek Inc. DBA MiTek USA FL Cert 6634
16023 Swingley Ridge Rd. Chesterfield, MO 63017

Date:

June 23,2025

WARNING - Verify design parameters and READ NOTES ON THIS AND INCLUDED MITEK REFERENCE PAGE MII-7473 rev. 1/2/2023 BEFORE USE.
Design valid for use only with MiTek® connectors. This design is based only upon parameters shown, and is for an individual building component, not a truss system. Before use, the building designer must verify the applicability of design parameters and properly incorporate this design into the overall building design. Bracing indicated is to prevent buckling of individual truss web and/or chord members only. Additional temporary and permanent bracing is always required for stability and to prevent collapse with possible personal injury and property damage. For general guidance regarding the fabrication, storage, delivery, erection and bracing of trusses and truss systems, see **ANSI/TPI1 Quality Criteria and DSB-22** available from Truss Plate Institute (www.tpinst.org) and **BCSI Building Component Safety Information** available from the Structural Building Component Association (www.sbcscomponents.com)

MiTek®
16023 Swingley Ridge Rd.
Chesterfield, MO 63017
314.434.1200 / MiTek-US.com

Job	Truss	Truss Type	Qty	Ply	Mitch Brown
250620-02KM	T15	Roof Special	4	1	T37696818 Job Reference (optional)

Coastal Truss & Vinyl Siding, Patterson, GA - 31577,

Run: 8.73 S Feb 19 2025 Print: 8.730 S Feb 19 2025 MiTek Industries, Inc. Fri Jun 20 12:42:48 Page: 1
ID:bYaooOg0MCMtz2YJoiCJZvz4Ocn-RfC?PsB70Hq3NSgPqnL8w3uITXbGKWrCDoi7J4zJC?f

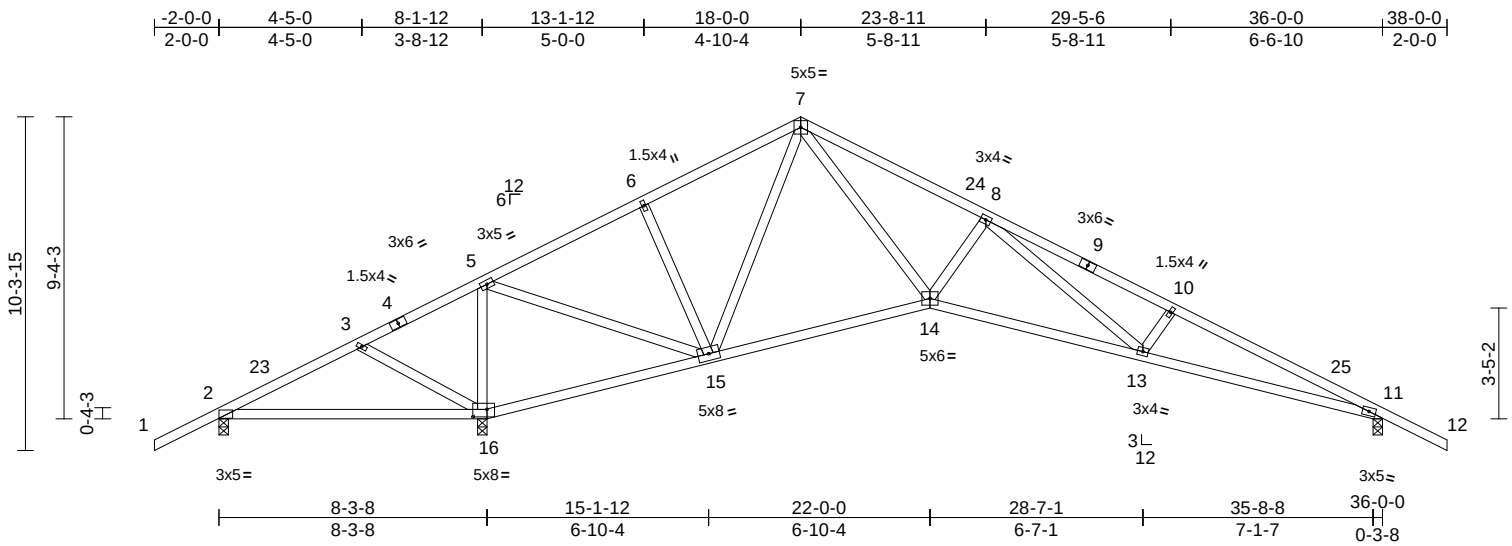

Scale = 1:71.3

Plate Offsets (X, Y): [16:0-5-4,0-2-12]

Loading	(psf)	Spacing	2-0-0	CSI		DEFL	in	(loc)	l/defl	L/d	PLATES	GRIP
TCLL (roof)	20.0	Plate Grip DOL	1.25	TC	0.59	Vert(LL)	-0.17	13-14	>999	240	MT20	244/190
TCDL	7.0	Lumber DOL	1.25	BC	0.56	Vert(CT)	-0.31	13-14	>999	180		
BCLL	0.0*	Rep Stress Incr	YES	WB	0.68	Horz(CT)	0.13	11	n/a	n/a		
BCDL	7.0	Code	FBC2023/TPI2014	Matrix-MS							Weight: 189 lb	FT = 20%

LUMBER
TOP CHORD 2x4 SP No.2
BOT CHORD 2x4 SP No.2
WEBS 2x4 SP No.2

BRACING
TOP CHORD Structural wood sheathing directly applied or 3-6-14 oc purlins.
BOT CHORD Structural wood sheathing directly applied or 5-0-5 oc bracing.

REACTIONS (size) 2=0-3-8, 11=0-3-8, 16=0-3-8
Max Horiz 2=-265 (LC 10)
Max Uplift 2=-403 (LC 24), 11=-335 (LC 12), 16=-527 (LC 12)
Max Grav 2=46 (LC 23), 11=861 (LC 1), 16=2043 (LC 1)

FORCES (lb) - Maximum Compression/Maximum Tension
TOP CHORD 1-2=0/48, 2-3=-315/1178, 3-5=-367/1429, 5-6=-368/219, 6-7=-263/250, 7-8=-1241/495, 8-10=-2136/761, 10-11=-2300/759, 11-12=0/48
BOT CHORD 2-16=-1025/397, 15-16=-1341/549, 14-15=0/443, 13-14=-286/1359, 11-13=-593/2069
WEBS 3-16=-286/152, 5-16=-1490/535, 5-15=-451/1620, 6-15=-271/235, 7-15=-643/161, 7-14=-342/1147, 8-14=-531/340, 8-13=-264/778, 10-13=-287/192

NOTES
1) Unbalanced roof live loads have been considered for this design.
2) Wind: ASCE 7-22; Vult=130mph (3-second gust) Vasd=101mph; TCDL=4.2psf; BCDL=4.2psf; h=18ft; B=50ft; L=36ft; eave=5ft; Cat. II; Exp C; Enclosed; MWFRS (directional) and C-C Zone3 -2-0-0 to 1-7-3, Zone1 1-7-3 to 18-0-0, Zone2 18-0-0 to 23-1-2, Zone1 23-1-2 to 38-0-0 zone; cantilever left and right exposed ; end vertical left and right exposed;C-C for members and forces & MWFRS for reactions shown; Lumber DOL=1.60 plate grip DOL=1.60
3) Building Designer / Project engineer responsible for verifying applied roof live load shown covers rain loading requirements specific to the use of this truss component.
4) This truss has been designed for a 10.0 psf bottom chord live load nonconcurrent with any other live loads.
5) * This truss has been designed for a live load of 20.0psf on the bottom chord in all areas where a rectangle 3-06-00 tall by 2-00-00 wide will fit between the bottom chord and any other members.
6) All bearings are assumed to be SP No.2 .
7) Bearing at joint(s) 11 considers parallel to grain value using ANSI/TPI 1 angle to grain formula. Building designer should verify capacity of bearing surface.
8) Provide mechanical connection (by others) of truss to bearing plate capable of withstanding 403 lb uplift at joint 2, 527 lb uplift at joint 16 and 335 lb uplift at joint 11.

LOAD CASE(S) Standard

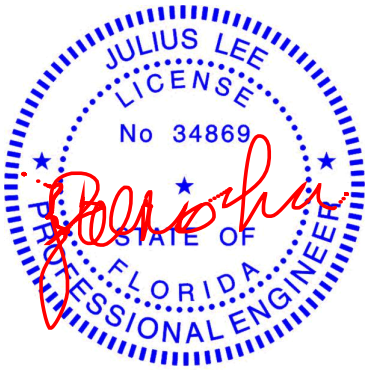

Julius Lee PE No. 34869
MiTek Inc. DBA MiTek USA FL Cert 6634
16023 Swingley Ridge Rd. Chesterfield, MO 63017

Date:

June 23,2025

WARNING - Verify design parameters and READ NOTES ON THIS AND INCLUDED MITEK REFERENCE PAGE MII-7473 rev. 1/2/2023 BEFORE USE.
Design valid for use only with MiTek® connectors. This design is based only upon parameters shown, and is for an individual building component, not a truss system. Before use, the building designer must verify the applicability of design parameters and properly incorporate this design into the overall building design. Bracing indicated is to prevent buckling of individual truss web and/or chord members only. Additional temporary and permanent bracing is always required for stability and to prevent collapse with possible personal injury and property damage. For general guidance regarding the fabrication, storage, delivery, erection and bracing of trusses and truss systems, see **ANSI/TPI1 Quality Criteria and DSB-22** available from Truss Plate Institute (www.tpinst.org) and **BCSI Building Component Safety Information** available from the Structural Building Component Association (www.sbcscomponents.com)

MiTek®
16023 Swingley Ridge Rd.
Chesterfield, MO 63017
314.434.1200 / MiTek-US.com

Job	Truss	Truss Type	Qty	Ply	Mitch Brown
250620-02KM	T16	Roof Special	1	1	T37696819 Job Reference (optional)

Coastal Truss & Vinyl Siding, Patterson, GA - 31577,

Run: 8.73 S Feb 19 2025 Print: 8.730 S Feb 19 2025 MiTek Industries, Inc. Fri Jun 20 12:42:48 Page: 1
ID:3l8A?kge7VUkbB7VLPjY67z4Ocm-RfC?PsB70Hq3NSgPqnL8w3uITXbGKWrCDoi7J4zJC?f

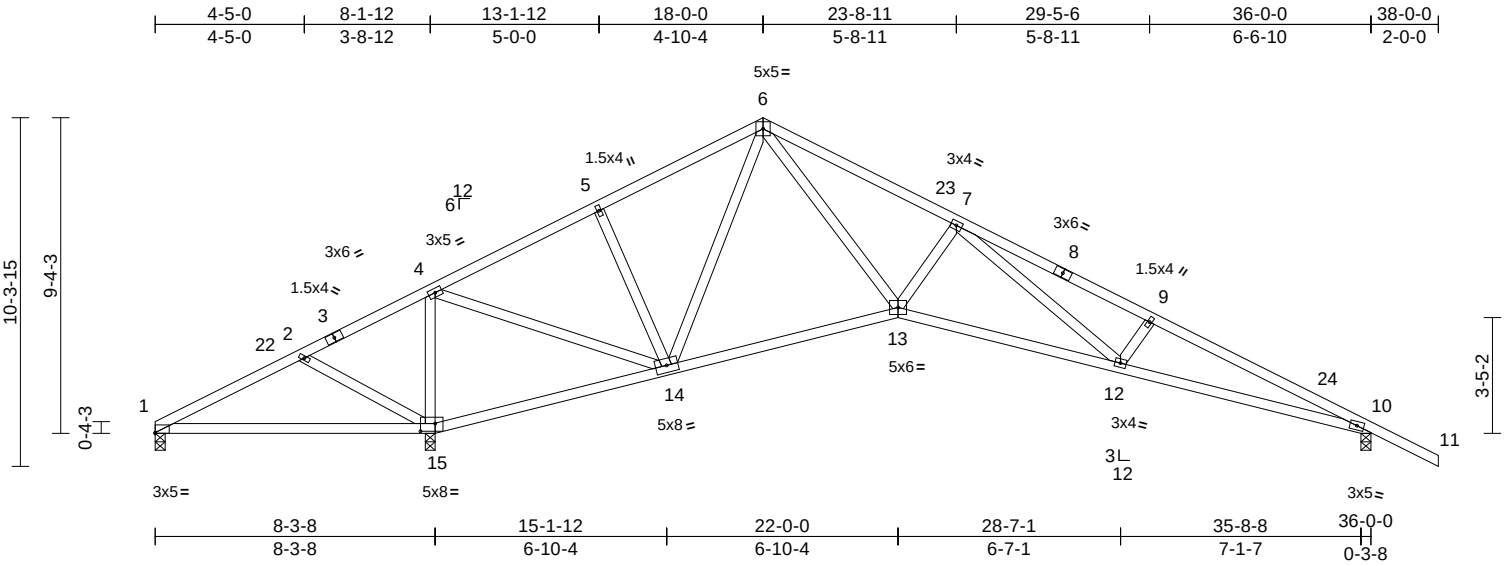

Scale = 1:68.2

Plate Offsets (X, Y): [1:Edge,0-0-4], [15:0-5-4,0-2-12]

Loading	(psf)	Spacing	2-0-0	CSI		DEFL	in	(loc)	l/defl	L/d	PLATES	GRIP
TCLL (roof)	20.0	Plate Grip DOL	1.25	TC	0.62	Vert(LL)	-0.17	12-13	>999	240	MT20	244/190
TCDL	7.0	Lumber DOL	1.25	BC	0.56	Vert(CT)	-0.31	12-13	>999	180		
BCLL	0.0*	Rep Stress Incr	YES	WB	0.69	Horz(CT)	0.13	10	n/a	n/a		
BCDL	7.0	Code	FBC2023/TPI2014	Matrix-MS							Weight: 186 lb	FT = 20%

LUMBER
TOP CHORD 2x4 SP No.2
BOT CHORD 2x4 SP No.2
WEBS 2x4 SP No.2

BRACING
TOP CHORD Structural wood sheathing directly applied or 3-6-14 oc purlins.
BOT CHORD Structural wood sheathing directly applied or 5-0-5 oc bracing.

REACTIONS (size) 1=0-3-8, 10=0-3-8, 15=0-3-8
Max Horiz 1=-258 (LC 10)
Max Uplift 1=-434 (LC 24), 10=-335 (LC 12), 15=-543 (LC 12)
Max Grav 1=61 (LC 12), 10=861 (LC 1), 15=2057 (LC 1)

FORCES (lb) - Maximum Compression/Maximum Tension
TOP CHORD 1-2=-256/1159, 2-4=-371/1428, 4-5=-367/218, 5-6=-262/249, 6-7=-1239/489, 7-9=-2135/755, 9-10=-2299/753, 10-11=0/48
BOT CHORD 1-15=-1013/319, 14-15=-1343/560, 13-14=0/442, 12-13=-280/1358, 10-12=-587/2068
WEBS 2-15=-315/225, 4-15=-1483/520, 4-14=-458/1621, 5-14=-272/236, 6-14=-644/164, 6-13=-340/1147, 7-13=-531/340, 7-12=-265/778, 9-12=-287/192

NOTES
1) Unbalanced roof live loads have been considered for this design.
2) Wind: ASCE 7-22; Vult=130mph (3-second gust) Vasd=101mph; TCDL=4.2psf; BCDL=4.2psf; h=18ft; B=50ft; L=36ft; eave=5ft; Cat. II; Exp C; Enclosed; MWFRS (directional) and C-C Zone3 0-0-0 to 3-7-3, Zone1 3-7-3 to 18-0-0, Zone2 18-0-0 to 23-1-2, Zone1 23-1-2 to 38-0-0 zone; cantilever left and right exposed ; end vertical left and right exposed;C-C for members and forces & MWFRS for reactions shown; Lumber DOL=1.60 plate grip DOL=1.60
3) Building Designer / Project engineer responsible for verifying applied roof live load shown covers rain loading requirements specific to the use of this truss component.
4) This truss has been designed for a 10.0 psf bottom chord live load nonconcurrent with any other live loads.
5) * This truss has been designed for a live load of 20.0psf on the bottom chord in all areas where a rectangle 3-06-00 tall by 2-00-00 wide will fit between the bottom chord and any other members.
6) All bearings are assumed to be SP No.2 .
7) Bearing at joint(s) 10 considers parallel to grain value using ANSI/TPI 1 angle to grain formula. Building designer should verify capacity of bearing surface.
8) Provide mechanical connection (by others) of truss to bearing plate capable of withstanding 434 lb uplift at joint 1, 543 lb uplift at joint 15 and 335 lb uplift at joint 10.

LOAD CASE(S) Standard

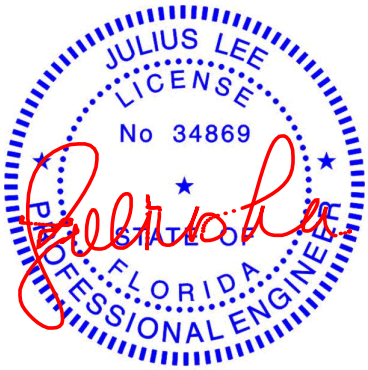

Julius Lee PE No. 34869
MiTek Inc. DBA MiTek USA FL Cert 6634
16023 Swingley Ridge Rd. Chesterfield, MO 63017

Date:

June 23,2025

WARNING - Verify design parameters and READ NOTES ON THIS AND INCLUDED MITEK REFERENCE PAGE MII-7473 rev. 1/2/2023 BEFORE USE.
Design valid for use only with MiTek® connectors. This design is based only upon parameters shown, and is for an individual building component, not a truss system. Before use, the building designer must verify the applicability of design parameters and properly incorporate this design into the overall building design. Bracing indicated is to prevent buckling of individual truss web and/or chord members only. Additional temporary and permanent bracing is always required for stability and to prevent collapse with possible personal injury and property damage. For general guidance regarding the fabrication, storage, delivery, erection and bracing of trusses and truss systems, see **ANSI/TPI1 Quality Criteria and DSB-22** available from Truss Plate Institute (www.tpinst.org) and **BCSI Building Component Safety Information** available from the Structural Building Component Association (www.sbcscomponents.com)

MiTek®
16023 Swingley Ridge Rd.
Chesterfield, MO 63017
314.434.1200 / MiTek-US.com

Job	Truss	Truss Type	Qty	Ply	Mitch Brown
250620-02KM	GE03	Common Supported Gable	1	1	T37696820 Job Reference (optional)

Coastal Truss & Vinyl Siding, Patterson, GA - 31577,

Run: 8.73 S Feb 19 2025 Print: 8.730 S Feb 19 2025 MiTek Industries, Inc. Fri Jun 20 12:42:43 Page: 1
ID:QRQeUdX6ypzR8LDCeuWkdbz4Ocy-RfC?PsB70Hq3NSgPqnL8w3uITXbGKWrCDoi7J4zJC?f

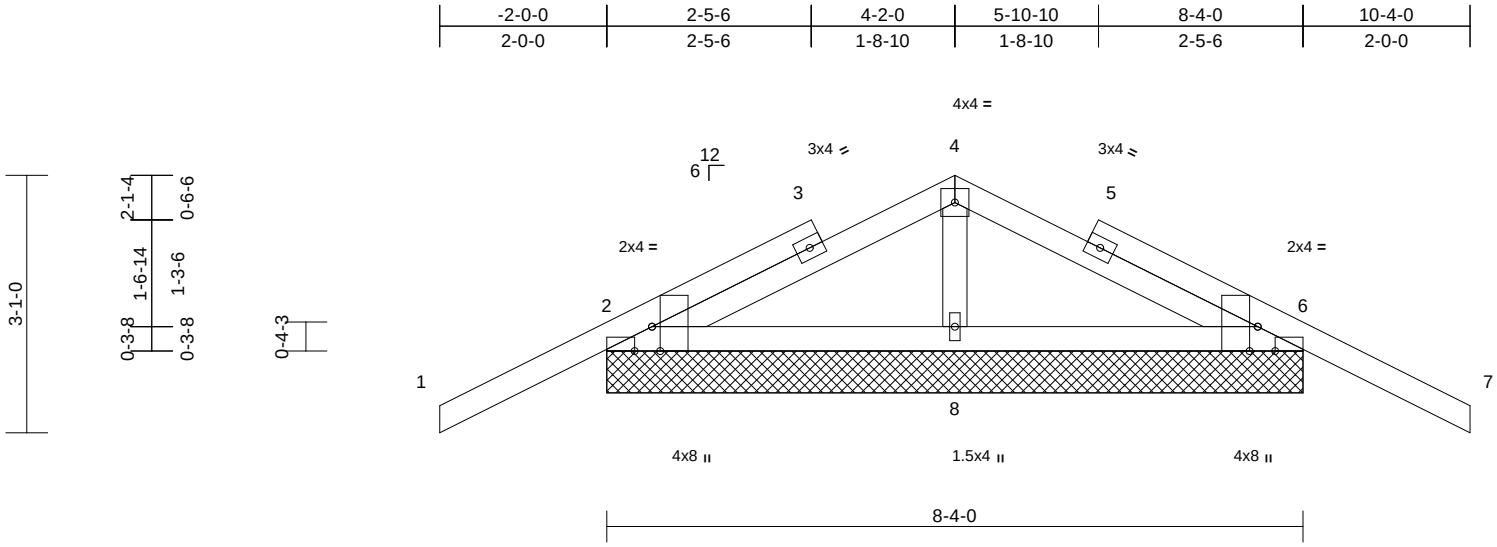

Scale = 1:27.6

Plate Offsets (X, Y): [2:0-3-8,Edge], [2:0-2-8,Edge], [6:0-3-8,Edge], [6:0-2-8,Edge]

Loading	(psf)	Spacing	2-0-0	CSI		DEFL	in	(loc)	l/defl	L/d	PLATES	GRIP
TCLL (roof)	20.0	Plate Grip DOL	1.25	TC	0.51	Vert(LL)	n/a	-	n/a	999	MT20	244/190
TCDL	7.0	Lumber DOL	1.25	BC	0.12	Vert(CT)	n/a	-	n/a	999		
BCLL	0.0*	Rep Stress Incr	YES	WB	0.05	Horz(CT)	0.00	12	n/a	n/a		
BCDL	7.0	Code	FBC2023/TPI2014	Matrix-MP							Weight: 42 lb	FT = 20%

LUMBER
TOP CHORD 2x4 SP No.2
BOT CHORD 2x4 SP No.2
OTHERS 2x4 SP No.2

BRACING
TOP CHORD Structural wood sheathing directly applied or 8-4-0 oc purlins.
BOT CHORD Structural wood sheathing directly applied or 6-0-0 oc bracing.

REACTIONS (size) 2=8-4-0, 6=8-4-0, 8=8-4-0
Max Horiz 2=-71 (LC 10)
Max Uplift 2=-178 (LC 12), 6=-178 (LC 12), 8=-3 (LC 12)
Max Grav 2=246 (LC 23), 6=246 (LC 24), 8=311 (LC 1)

FORCES (lb) - Maximum Compression/Maximum Tension
TOP CHORD 1-2=0/48, 2-4=-167/119, 4-6=-159/108, 6-7=0/48
BOT CHORD 2-8=-118/244, 6-8=-118/250
WEBS 4-8=-227/260

NOTES
1) Unbalanced roof live loads have been considered for this design.
2) Wind: ASCE 7-22; Vult=130mph (3-second gust) Vasd=101mph; TCDL=4.2psf; BCDL=4.2psf; h=18ft; B=50ft; L=30ft; eave=2ft; Cat. II; Exp C; Enclosed; MWFRS (directional) and C-C Zone3 zone; cantilever left and right exposed ; end vertical left and right exposed;C-C for members and forces & MWFRS for reactions shown; Lumber DOL=1.60 plate grip DOL=1.60
3) Truss designed for wind loads in the plane of the truss only. For studs exposed to wind (normal to the face), see Standard Industry Gable End Details as applicable, or consult qualified building designer as per ANSI/TPI 1.
4) Building Designer / Project engineer responsible for verifying applied roof live load shown covers rain loading requirements specific to the use of this truss component.
5) Gable requires continuous bottom chord bearing.
6) Gable studs spaced at 2-0-0 oc.
7) This truss has been designed for a 10.0 psf bottom chord live load nonconcurrent with any other live loads.
8) * This truss has been designed for a live load of 20.0psf on the bottom chord in all areas where a rectangle 3-06-00 tall by 2-00-00 wide will fit between the bottom chord and any other members.
9) All bearings are assumed to be SP No.2 .
10) Provide mechanical connection (by others) of truss to bearing plate capable of withstanding 178 lb uplift at joint 2, 178 lb uplift at joint 6, 3 lb uplift at joint 8, 178 lb uplift at joint 2 and 178 lb uplift at joint 6.

LOAD CASE(S) Standard

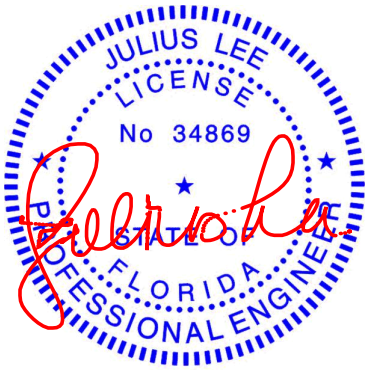

Julius Lee PE No. 34869
MiTek Inc. DBA MiTek USA FL Cert 6634
16023 Swingley Ridge Rd. Chesterfield, MO 63017

Date:

June 23,2025

WARNING - Verify design parameters and READ NOTES ON THIS AND INCLUDED MITEK REFERENCE PAGE MII-7473 rev. 1/2/2023 BEFORE USE.
Design valid for use only with MiTek® connectors. This design is based only upon parameters shown, and is for an individual building component, not a truss system. Before use, the building designer must verify the applicability of design parameters and properly incorporate this design into the overall building design. Bracing indicated is to prevent buckling of individual truss web and/or chord members only. Additional temporary and permanent bracing is always required for stability and to prevent collapse with possible personal injury and property damage. For general guidance regarding the fabrication, storage, delivery, erection and bracing of trusses and truss systems, see **ANSI/TPI1 Quality Criteria and DSB-22** available from Truss Plate Institute (www.tpinst.org) and **BCSI Building Component Safety Information** available from the Structural Building Component Association (www.sbcscomponents.com)

MiTek®
16023 Swingley Ridge Rd.
Chesterfield, MO 63017
314.434.1200 / MiTek-US.com

Job	Truss	Truss Type	Qty	Ply	Mitch Brown
250620-02KM	T17	Common	1	1	T37696821 Job Reference (optional)

Coastal Truss & Vinyl Siding, Patterson, GA - 31577,

Run: 8.73 S Feb 19 2025 Print: 8.730 S Feb 19 2025 MiTek Industries, Inc. Fri Jun 20 12:42:48 Page: 1
ID:3l8A?kge7VUkbB7VLPjY67z4Ocm-RfC?PsB70Hq3NSgPqnL8w3uITXbGKWrCDoi7J4zJC?f

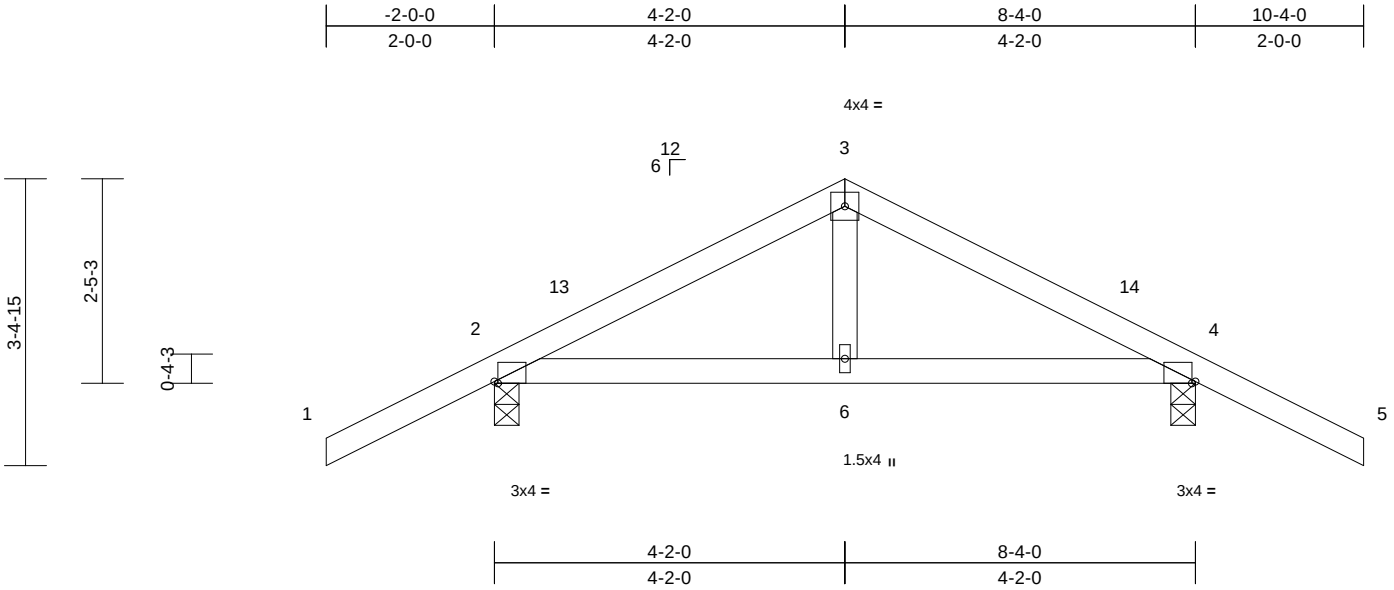

Scale = 1:27.4

Plate Offsets (X, Y): [2:0-0-8,Edge], [4:0-0-8,Edge]

Loading	(psf)	Spacing	2-0-0	CSI		DEFL	in	(loc)	l/defl	L/d	PLATES	GRIP
TCLL (roof)	20.0	Plate Grip DOL	1.25	TC	0.51	Vert(LL)	0.02	6-12	>999	240	MT20	244/190
TCDL	7.0	Lumber DOL	1.25	BC	0.16	Vert(CT)	-0.02	6-12	>999	180		
BCLL	0.0*	Rep Stress Incr	YES	WB	0.04	Horz(CT)	0.00	4	n/a	n/a		
BCDL	7.0	Code	FBC2023/TPI2014	Matrix-MP							Weight: 36 lb	FT = 20%

LUMBER
TOP CHORD 2x4 SP No.2
BOT CHORD 2x4 SP No.2
WEBS 2x4 SP No.2

BRACING
TOP CHORD Structural wood sheathing directly applied or 6-0-0 oc purlins.
BOT CHORD Structural wood sheathing directly applied or 10-0-0 oc bracing.

REACTIONS (size) 2=0-3-8, 4=0-3-8
Max Horiz 2=-79 (LC 10)
Max Uplift 2=-179 (LC 12), 4=-179 (LC 12)
Max Grav 2=391 (LC 1), 4=391 (LC 1)

FORCES (lb) - Maximum Compression/Maximum Tension
TOP CHORD 1-2=0/48, 2-3=-322/199, 3-4=-322/199, 4-5=0/48
BOT CHORD 2-6=-29/332, 4-6=-29/350
WEBS 3-6=0/156

NOTES
1) Unbalanced roof live loads have been considered for this design.
2) Wind: ASCE 7-22; Vult=130mph (3-second gust) Vasd=101mph; TCDL=4.2psf; BCDL=4.2psf; h=18ft; B=50ft; L=30ft; eave=4ft; Cat. II; Exp C; Enclosed; MWFRS (directional) and C-C Zone3 -2-0-0 to 1-0-0, Zone1 1-0-0 to 4-2-0, Zone2 4-2-0 to 8-4-0, Zone1 8-4-0 to 10-4-0 zone; cantilever left and right exposed ; end vertical left and right exposed;C-C for members and forces & MWFRS for reactions shown; Lumber DOL=1.60 plate grip DOL=1.60
3) Building Designer / Project engineer responsible for verifying applied roof live load shown covers rain loading requirements specific to the use of this truss component.
4) This truss has been designed for a 10.0 psf bottom chord live load nonconcurrent with any other live loads.
5) * This truss has been designed for a live load of 20.0psf on the bottom chord in all areas where a rectangle 3-06-00 tall by 2-00-00 wide will fit between the bottom chord and any other members.
6) All bearings are assumed to be SP No.2 .
7) Provide mechanical connection (by others) of truss to bearing plate capable of withstanding 179 lb uplift at joint 2 and 179 lb uplift at joint 4.

LOAD CASE(S) Standard

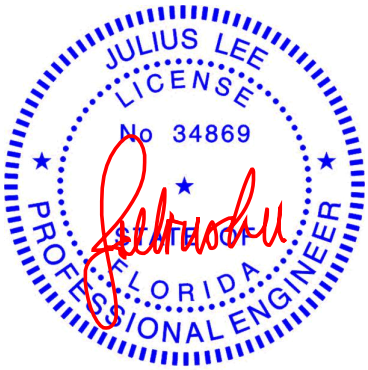

Julius Lee PE No. 34869
MiTek Inc. DBA MiTek USA FL Cert 6634
16023 Swingley Ridge Rd. Chesterfield, MO 63017

Date:

June 23,2025

WARNING - Verify design parameters and READ NOTES ON THIS AND INCLUDED MITEK REFERENCE PAGE MII-7473 rev. 1/2/2023 BEFORE USE.
Design valid for use only with MiTek® connectors. This design is based only upon parameters shown, and is for an individual building component, not a truss system. Before use, the building designer must verify the applicability of design parameters and properly incorporate this design into the overall building design. Bracing indicated is to prevent buckling of individual truss web and/or chord members only. Additional temporary and permanent bracing is always required for stability and to prevent collapse with possible personal injury and property damage. For general guidance regarding the fabrication, storage, delivery, erection and bracing of trusses and truss systems, see **ANSI/TPI1 Quality Criteria and DSB-22** available from Truss Plate Institute (www.tpinst.org) and **BCSI Building Component Safety Information** available from the Structural Building Component Association (www.sbcscomponents.com)

MiTek®
16023 Swingley Ridge Rd.
Chesterfield, MO 63017
314.434.1200 / MiTek-US.com

Job	Truss	Truss Type	Qty	Ply	Mitch Brown
250620-02KM	SGE01	Common Structural Gable	1	1	T37696822 Job Reference (optional)

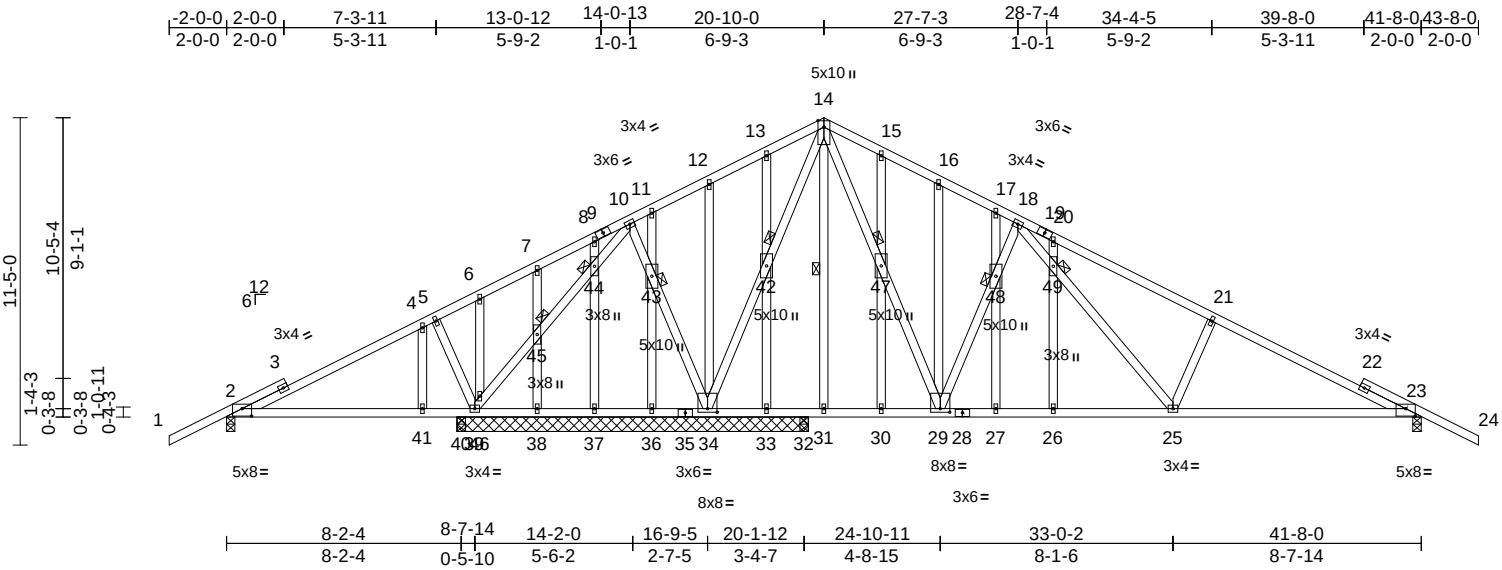

Scale = 1:80.4

Plate Offsets (X, Y): [2:0-4-0,0-3-1], [23:0-4-0,0-3-1], [29:0-4-0,0-1-8], [34:0-4-0,0-1-8]

Loading	(psf)	Spacing	2-0-0	CSI		DEFL	in	(loc)	l/defl	L/d	PLATES	GRIP
TCLL (roof)	20.0	Plate Grip DOL	1.25	TC	0.54	Vert(LL)	-0.12	25-55	>999	240	MT20	244/190
TCDL	7.0	Lumber DOL	1.25	BC	0.49	Vert(CT)	-0.25	25-55	>999	180		
BCLL	0.0*	Rep Stress Incr	YES	WB	0.27	Horz(CT)	0.01	23	n/a	n/a		
BCDL	7.0	Code	FBC2023/TPI2014	Matrix-MS							Weight: 347 lb	FT = 20%

LUMBER

TOP CHORD 2x4 SP No.2
BOT CHORD 2x4 SP No.2
WEBS 2x4 SP No.2
OTHERS 2x4 SP No.2

BRACING

TOP CHORD Structural wood sheathing directly applied or 5-1-14 oc purlins.
BOT CHORD Structural wood sheathing directly applied or 6-0-0 oc bracing, Except:
10-0-0 oc bracing: 27-29,26-27,25-26,23-25.
WEBS 1 Row at midpt 14-31
JOINTS 1 Brace at Jt(s): 42, 43, 44, 45, 47, 48, 49

REACTIONS (size) 2=0-3-8, 23=0-3-8, 32=0-3-8, 33=12-3-0, 34=12-3-0, 36=12-3-0, 37=12-3-0, 38=12-3-0, 40=0-3-8
Max Horiz 2=302 (LC 11)
Max Uplift 2=-133 (LC 12), 23=-292 (LC 12), 32=-113 (LC 12), 33=-116 (LC 24), 34=-299 (LC 12), 36=-16 (LC 9), 37=-22 (LC 9), 38=-78 (LC 12), 40=-100 (LC 9)
Max Grav 2=272 (LC 23), 23=704 (LC 24), 32=607 (LC 1), 33=63 (LC 23), 34=1052 (LC 1), 36=95 (LC 23), 37=98 (LC 23), 38=192 (LC 17), 40=345 (LC 23)

FORCES (lb) - Maximum Compression/Maximum Tension

TOP CHORD 1-2=0/52, 2-4=-310/393, 4-5=-111/421, 5-6=-100/428, 6-7=-99/497, 7-8=-48/469, 8-10=-22/465, 10-11=-68/625, 11-12=-45/659, 12-13=-2/665, 13-14=0/648, 14-15=-106/306, 15-16=-121/276, 16-17=-67/209, 17-18=-118/219, 18-20=-733/418, 20-21=-795/370, 21-23=-885/334, 23-24=0/52
BOT CHORD 2-41=-330/345, 40-41=-330/253, 39-40=-330/253, 38-39=-563/359, 37-38=-563/359, 36-37=-563/359, 34-36=-563/359, 33-34=-349/328, 32-33=-349/328, 31-32=-349/328, 30-31=-354/329, 29-30=-354/329, 27-29=0/230, 26-27=0/230, 25-26=0/230, 23-25=-196/779
WEBS 14-47=-412/809, 29-47=-439/861, 29-48=-517/241, 18-48=-550/255, 18-49=-278/725, 25-49=-248/668, 21-25=-392/239, 34-42=-787/248, 14-42=-828/261, 10-43=-205/114, 34-43=-198/111, 39-46=-85/310, 45-46=-87/274, 44-45=-82/264, 10-44=-91/286, 5-39=-388/159, 14-31=-339/90, 13-42=-140/118, 33-42=-182/127, 12-34=-104/123, 11-43=-69/47, 36-43=-70/48, 8-44=-75/41, 37-44=-78/42, 7-45=-151/100, 38-45=-150/105, 6-46=-13/86, 4-41=0/172, 15-47=-15/51, 30-47=-71/80, 16-29=-214/167, 17-48=-40/94, 27-48=-22/59, 20-49=-111/98, 26-49=-39/60

NOTES

1) Unbalanced roof live loads have been considered for this design.
2) Wind: ASCE 7-22; Vult=130mph (3-second gust) Vasd=101mph; TCDL=4.2psf; BCDL=4.2psf; h=18ft; B=50ft; L=42ft; eave=5ft; Cat. II; Exp C; Enclosed; MWFRS (directional) and C-C Zone3 -2-0-0 to 2-2-0, Zone1 2-2-0 to 20-8-4, Zone2 20-8-4 to 26-10-0, Zone1 26-10-0 to 43-8-0 zone; cantilever left and right exposed ; end vertical left and right exposed;C-C for members and forces & MWFRS for reactions shown; Lumber DOL=1.60 plate grip DOL=1.60
3) Truss designed for wind loads in the plane of the truss only. For studs exposed to wind (normal to the face), see Standard Industry Gable End Details as applicable, or consult qualified building designer as per ANSI/TPI 1.
4) Building Designer / Project engineer responsible for verifying applied roof live load shown covers rain loading requirements specific to the use of this truss component.
5) All plates are 1.5x4 MT20 unless otherwise indicated.
6) Gable studs spaced at 2-0-0 oc.
7) This truss has been designed for a 10.0 psf bottom chord live load nonconcurrent with any other live loads.

Julius Lee PE No. 34869
MiTek Inc. DBA MiTek USA FL Cert 6634
16023 Swingley Ridge Rd. Chesterfield, MO 63017
Date:

June 23,2025

Continued on page 2

WARNING - Verify design parameters and READ NOTES ON THIS AND INCLUDED MITEK REFERENCE PAGE MII-7473 rev. 1/2/2023 BEFORE USE.
Design valid for use only with MiTek® connectors. This design is based only upon parameters shown, and is for an individual building component, not a truss system. Before use, the building designer must verify the applicability of design parameters and properly incorporate this design into the overall building design. Bracing indicated is to prevent buckling of individual truss web and/or chord members only. Additional temporary and permanent bracing is always required for stability and to prevent collapse with possible personal injury and property damage. For general guidance regarding the fabrication, storage, delivery, erection and bracing of trusses and truss systems, see **ANSI/TPI1 Quality Criteria and DSB-22** available from Truss Plate Institute (www.tpinst.org) and **BCSI Building Component Safety Information** available from the Structural Building Component Association (www.sbcscomponents.com)

MiTek®
16023 Swingley Ridge Rd.
Chesterfield, MO 63017
314.434.1200 / MiTek-US.com

8) * This truss has been designed for a live load of 20.0psf on the bottom chord in all areas where a rectangle 3-06-00 tall by 2-00-00 wide will fit between the bottom chord and any other members.
9) All bearings are assumed to be SP No.2 .
10) Provide mechanical connection (by others) of truss to bearing plate capable of withstanding 133 lb uplift at joint 2, 299 lb uplift at joint 34, 116 lb uplift at joint 33, 16 lb uplift at joint 36, 22 lb uplift at joint 37, 78 lb uplift at joint 38, 292 lb uplift at joint 23, 100 lb uplift at joint 40 and 113 lb uplift at joint 32.

LOAD CASE(S) Standard

WARNING - Verify design parameters and READ NOTES ON THIS AND INCLUDED MITEK REFERENCE PAGE MII-7473 rev. 1/2/2023 BEFORE USE.

Design valid for use only with MiTek® connectors. This design is based only upon parameters shown, and is for an individual building component, not a truss system. Before use, the building designer must verify the applicability of design parameters and properly incorporate this design into the overall building design. Bracing indicated is to prevent buckling of individual truss web and/or chord members only. Additional temporary and permanent bracing is always required for stability and to prevent collapse with possible personal injury and property damage. For general guidance regarding the fabrication, storage, delivery, erection and bracing of trusses and truss systems, see **ANSI/TPI1 Quality Criteria and DSB-22** available from Truss Plate Institute (www.tpinst.org) and **BCSI Building Component Safety Information** available from the Structural Building Component Association (www.sbcscomponents.com)

MiTek®
16023 Swingley Ridge Rd.
Chesterfield, MO 63017
314.434.1200 / MiTek-US.com

Job	Truss	Truss Type	Qty	Ply	Mitch Brown
250620-02KM	H01	Hip Girder	1	1	T37696823 Job Reference (optional)

Coastal Truss & Vinyl Siding, Patterson, GA - 31577,

Run: 8.73 S Feb 19 2025 Print: 8.730 S Feb 19 2025 MiTek Industries, Inc. Fri Jun 20 12:42:43 Page: 1
ID:UKqJdmjWQQsJSfs41YHFklz4Ocj-RfC?PsB70Hq3NSgPqnL8w3uITXbGKWrCDoi7J4zJC?f

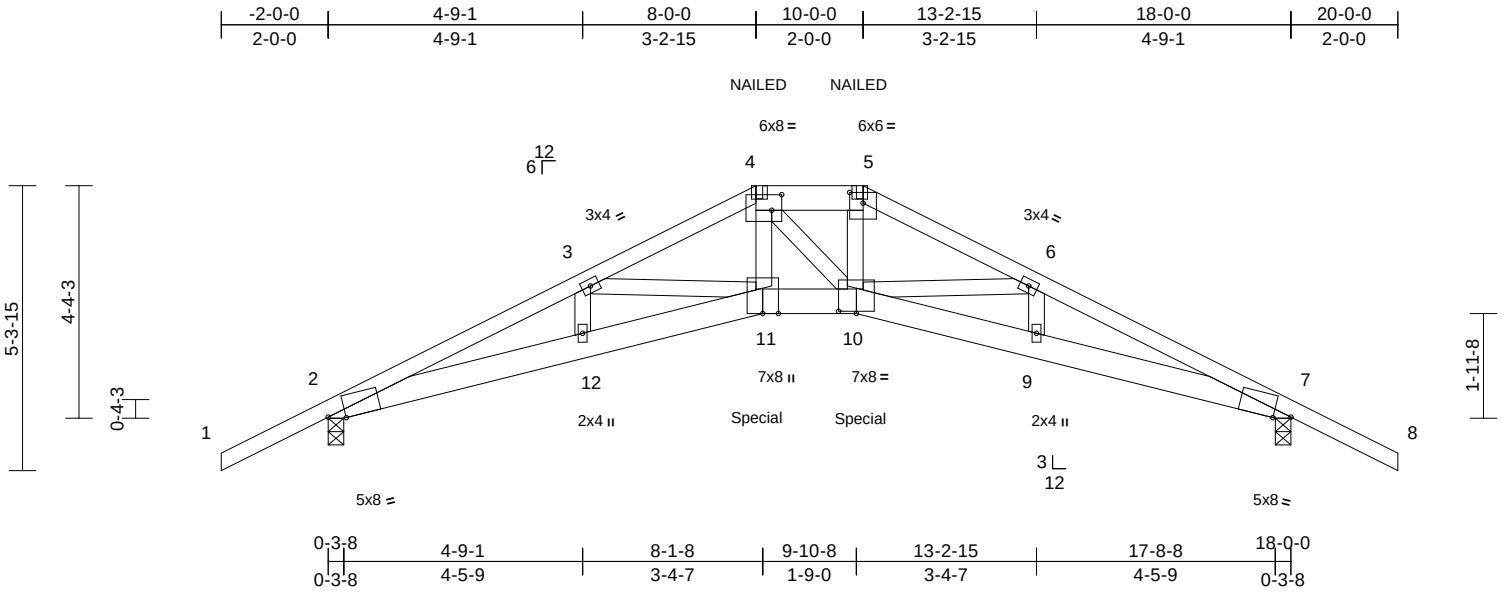

Scale = 1:43.1

Plate Offsets (X, Y): [2:0-3-15,Edge], [4:0-2-4,0-3-8], [5:0-3-0,0-2-7], [7:0-3-15,Edge], [10:0-4-0,0-0-8]

Loading	(psf)	Spacing	2-0-0	CSI		DEFL	in	(loc)	l/defl	L/d	PLATES	GRIP
TCLL (roof)	20.0	Plate Grip DOL	1.25	TC	0.51	Vert(LL)	-0.25	11	>868	240	MT20	244/190
TCDL	7.0	Lumber DOL	1.25	BC	1.00	Vert(CT)	-0.43	11	>506	180		
BCLL	0.0*	Rep Stress Incr	NO	WB	0.40	Horz(CT)	0.28	7	n/a	n/a		
BCDL	7.0	Code	FBC2023/TPI2014	Matrix-MS							Weight: 101 lb	FT = 20%

LUMBER
TOP CHORD 2x4 SP No.2 *Except* 4-5:2x6 SP No.2
BOT CHORD 2x6 SP No.2
WEBS 2x4 SP No.2

BRACING
TOP CHORD Structural wood sheathing directly applied or 2-5-8 oc purlins, except 2-0-0 oc purlins (3-8-2 max.): 4-5.
BOT CHORD Structural wood sheathing directly applied or 6-8-8 oc bracing.

REACTIONS (size) 2=0-3-8, 7=0-3-8
Max Horiz 2=128 (LC 7)
Max Uplift 2=-530 (LC 8), 7=-530 (LC 8)
Max Grav 2=1395 (LC 1), 7=1395 (LC 1)

FORCES (lb) - Maximum Compression/Maximum Tension
TOP CHORD 1-2=0/48, 2-3=-4707/1414, 3-4=-4509/1398, 4-5=-4125/1313, 5-6=-4510/1404, 6-7=-4605/1412, 7-8=0/48
BOT CHORD 2-12=-1176/4387, 11-12=-1188/4409, 10-11=-1102/4190, 9-10=-1187/4228, 7-9=-1174/4202
WEBS 3-12=-51/77, 3-11=-191/280, 4-11=-504/1841, 4-10=-56/127, 5-10=-510/1844, 6-10=-178/297, 6-9=-71/81

NOTES
1) Unbalanced roof live loads have been considered for this design.
2) Wind: ASCE 7-22; Vult=130mph (3-second gust) Vasd=101mph; TCDL=4.2psf; BCDL=4.2psf; h=18ft; B=50ft; L=30ft; eave=4ft; Cat. II; Exp C; Enclosed; MWFRS (directional); cantilever left and right exposed ; end vertical left and right exposed; Lumber DOL=1.60 plate grip DOL=1.60
3) Building Designer / Project engineer responsible for verifying applied roof live load shown covers rain loading requirements specific to the use of this truss component.
4) Provide adequate drainage to prevent water ponding.
5) This truss has been designed for a 10.0 psf bottom chord live load nonconcurrent with any other live loads.
6) * This truss has been designed for a live load of 20.0psf on the bottom chord in all areas where a rectangle 3-06-00 tall by 2-00-00 wide will fit between the bottom chord and any other members.
7) All bearings are assumed to be SP No.2 .
8) Bearing at joint(s) 2, 7 considers parallel to grain value using ANSI/TPI 1 angle to grain formula. Building designer should verify capacity of bearing surface.
9) Provide mechanical connection (by others) of truss to bearing plate capable of withstanding 530 lb uplift at joint 2 and 530 lb uplift at joint 7.
10) Graphical purlin representation does not depict the size or the orientation of the purlin along the top and/or bottom chord.
11) "NAILED" indicates 3-10d (0.148"x3") or 3-12d (0.148"x3.25") toe-nails per NDS guidlines.
12) Hanger(s) or other connection device(s) shall be provided sufficient to support concentrated load(s) 684 lb down and 214 lb up at 8-1-8, and 684 lb down and 214 lb up at 9-10-8 on bottom chord. The design/ selection of such connection device(s) is the responsibility of others.
13) In the LOAD CASE(S) section, loads applied to the face of the truss are noted as front (F) or back (B).

LOAD CASE(S) Standard
1) Dead + Roof Live (balanced): Lumber Increase=1.25, Plate Increase=1.25
Uniform Loads (lb/ft)
Vert: 1-4=-54, 4-5=-54, 5-8=-54, 11-13=-14, 10-11=-14, 10-16=-14
Concentrated Loads (lb)
Vert: 4=-34 (B), 5=-34 (B), 11=-641 (B), 10=-641 (B)

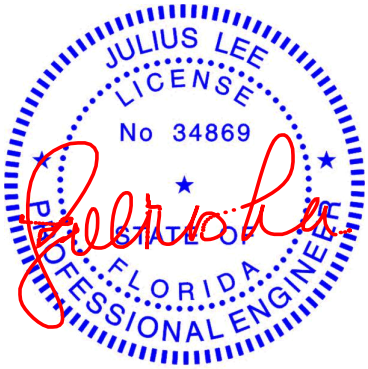

Julius Lee PE No. 34869
MiTek Inc. DBA MiTek USA FL Cert 6634
16023 Swingley Ridge Rd. Chesterfield, MO 63017
Date:

June 23,2025

WARNING - Verify design parameters and READ NOTES ON THIS AND INCLUDED MITEK REFERENCE PAGE MII-7473 rev. 1/2/2023 BEFORE USE.
Design valid for use only with MiTek® connectors. This design is based only upon parameters shown, and is for an individual building component, not a truss system. Before use, the building designer must verify the applicability of design parameters and properly incorporate this design into the overall building design. Bracing indicated is to prevent buckling of individual truss web and/or chord members only. Additional temporary and permanent bracing is always required for stability and to prevent collapse with possible personal injury and property damage. For general guidance regarding the fabrication, storage, delivery, erection and bracing of trusses and truss systems, see **ANSI/TPI1 Quality Criteria and DSB-22** available from Truss Plate Institute (www.tpinst.org) and **BCSI Building Component Safety Information** available from the Structural Building Component Association (www.sbcscomponents.com)

MiTek®
16023 Swingley Ridge Rd.
Chesterfield, MO 63017
314.434.1200 / MiTek-US.com

Job	Truss	Truss Type	Qty	Ply	Mitch Brown
250620-02KM	CJ01	Diagonal Hip Girder	2	1	T37696824 Job Reference (optional)

Coastal Truss & Vinyl Siding, Patterson, GA - 31577,

Run: 8.73 S Feb 19 2025 Print: 8.730 S Feb 19 2025 MiTek Industries, Inc. Fri Jun 20 12:42:41 Page: 1
ID:YxiYC4hGupcbCLiiv7EnfKz4Ocl-RfC?PsB70Hq3NSgPqnL8w3uITXbGKWrCDoi7J4zJC?f

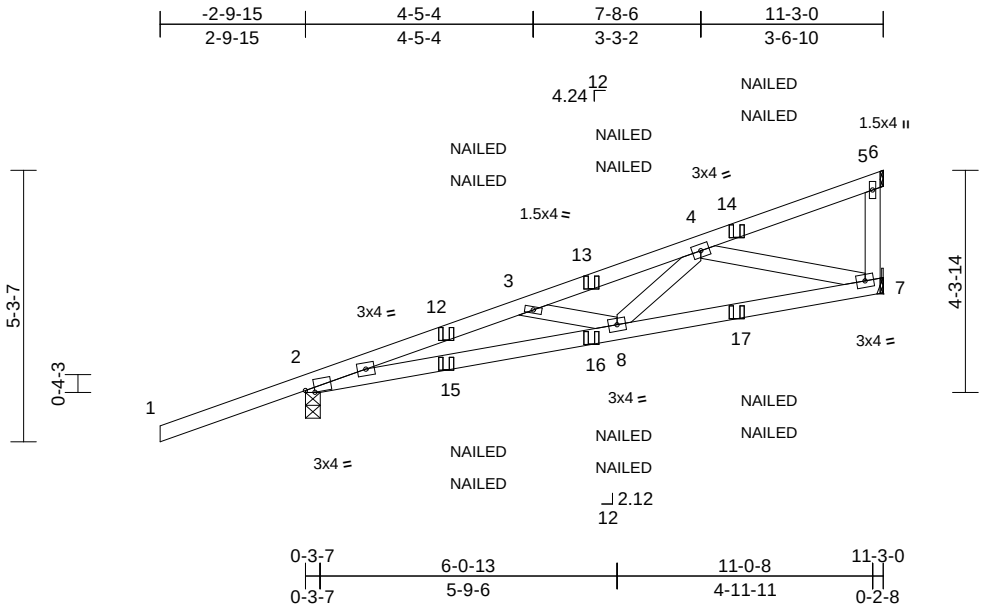

Scale = 1:44.9

Plate Offsets (X, Y): [2:0-2-2,0-0-13]

Loading	(psf)	Spacing	2-0-0	CSI		DEFL	in	(loc)	l/defl	L/d	PLATES	GRIP
TCLL (roof)	20.0	Plate Grip DOL	1.25	TC	0.56	Vert(LL)	-0.06	8-11	>999	240	MT20	244/190
TCDL	7.0	Lumber DOL	1.25	BC	0.49	Vert(CT)	-0.09	7-8	>999	180		
BCLL	0.0*	Rep Stress Incr	NO	WB	0.20	Horz(CT)	0.02	7	n/a	n/a		
BCDL	7.0	Code	FBC2023/TPI2014	Matrix-MS							Weight: 53 lb	FT = 20%

LUMBER
TOP CHORD 2x4 SP No.2
BOT CHORD 2x4 SP No.2
WEBS 2x4 SP No.2

BRACING
TOP CHORD Structural wood sheathing directly applied or 4-6-7 oc purlins, except end verticals.
BOT CHORD Structural wood sheathing directly applied or 9-5-11 oc bracing.

REACTIONS (size) 2=0-3-7, 7= Mechanical
Max Horiz 2=165 (LC 23)
Max Uplift 2=-265 (LC 8), 7=-159 (LC 5)
Max Grav 2=604 (LC 1), 7=542 (LC 13)

FORCES (lb) - Maximum Compression/Maximum Tension
TOP CHORD 1-2=0/51, 2-3=-1626/285, 3-4=-1343/203, 4-5=-150/63, 5-6=-1/0, 5-7=-89/54
BOT CHORD 2-8=-389/1493, 7-8=-321/946
WEBS 3-8=-258/110, 4-8=0/478, 4-7=-897/295

NOTES
1) Wind: ASCE 7-22; Vult=130mph (3-second gust) Vasd=101mph; TCDL=4.2psf; BCDL=4.2psf; h=18ft; B=50ft; L=30ft; eave=4ft; Cat. II; Exp C; Enclosed; MWFRS (directional); cantilever left and right exposed ; end vertical left and right exposed; Lumber DOL=1.60 plate grip DOL=1.60
2) Building Designer / Project engineer responsible for verifying applied roof live load shown covers rain loading requirements specific to the use of this truss component.
3) This truss has been designed for a 10.0 psf bottom chord live load nonconcurrent with any other live loads.
4) * This truss has been designed for a live load of 20.0psf on the bottom chord in all areas where a rectangle 3-06-00 tall by 2-00-00 wide will fit between the bottom chord and any other members.
5) Bearings are assumed to be: Joint 2 SP No.2 .
6) Refer to girder(s) for truss to truss connections.
7) Bearing at joint(s) 2 considers parallel to grain value using ANSI/TPI 1 angle to grain formula. Building designer should verify capacity of bearing surface.
8) Provide mechanical connection (by others) of truss to bearing plate capable of withstanding 159 lb uplift at joint 7 and 265 lb uplift at joint 2.
9) "NAILED" indicates 3-10d (0.148"x3") or 2-12d (0.148"x3.25") toe-nails per NDS guidlines.
10) In the LOAD CASE(S) section, loads applied to the face of the truss are noted as front (F) or back (B).

LOAD CASE(S) Standard
1) Dead + Roof Live (balanced): Lumber Increase=1.25, Plate Increase=1.25
Uniform Loads (lb/ft)
Vert: 1-5=-54, 5-6=-14, 7-9=-14
Concentrated Loads (lb)
Vert: 13=-8 (F=-4, B=-4), 14=-107 (F=-53, B=-53), 16=-20 (F=-10, B=-10), 17=-69 (F=-34, B=-34)

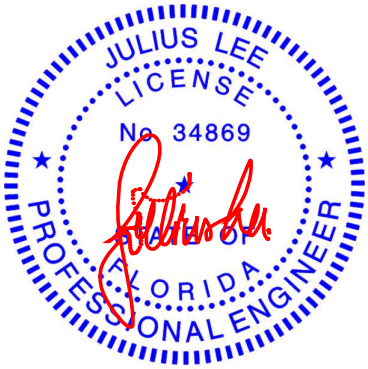

Julius Lee PE No. 34869
MiTek Inc. DBA MiTek USA FL Cert 6634
16023 Swingley Ridge Rd. Chesterfield, MO 63017
Date:

June 23,2025

WARNING - Verify design parameters and READ NOTES ON THIS AND INCLUDED MITEK REFERENCE PAGE MII-7473 rev. 1/2/2023 BEFORE USE.
Design valid for use only with MiTek® connectors. This design is based only upon parameters shown, and is for an individual building component, not a truss system. Before use, the building designer must verify the applicability of design parameters and properly incorporate this design into the overall building design. Bracing indicated is to prevent buckling of individual truss web and/or chord members only. Additional temporary and permanent bracing is always required for stability and to prevent collapse with possible personal injury and property damage. For general guidance regarding the fabrication, storage, delivery, erection and bracing of trusses and truss systems, see **ANSI/TPI1 Quality Criteria and DSB-22** available from Truss Plate Institute (www.tpinst.org) and **BCSI Building Component Safety Information** available from the Structural Building Component Association (www.sbcscomponents.com)

MiTek®
16023 Swingley Ridge Rd.
Chesterfield, MO 63017
314.434.1200 / MiTek-US.com

Job	Truss	Truss Type	Qty	Ply	Mitch Brown
250620-02KM	J01	Jack-Partial	2	1	T37696825 Job Reference (optional)

Coastal Truss & Vinyl Siding, Patterson, GA - 31577, Run: 8.73 S Feb 19 2025 Print: 8.730 S Feb 19 2025 MiTek Industries, Inc. Fri Jun 20 12:42:45 Page: 1
ID:07GwQQiuf7kSqVHuTqm0BYz4Ock-RfC?PsB70Hq3NSgPqnL8w3uITXbGKWrCDoi7J4zJC?f

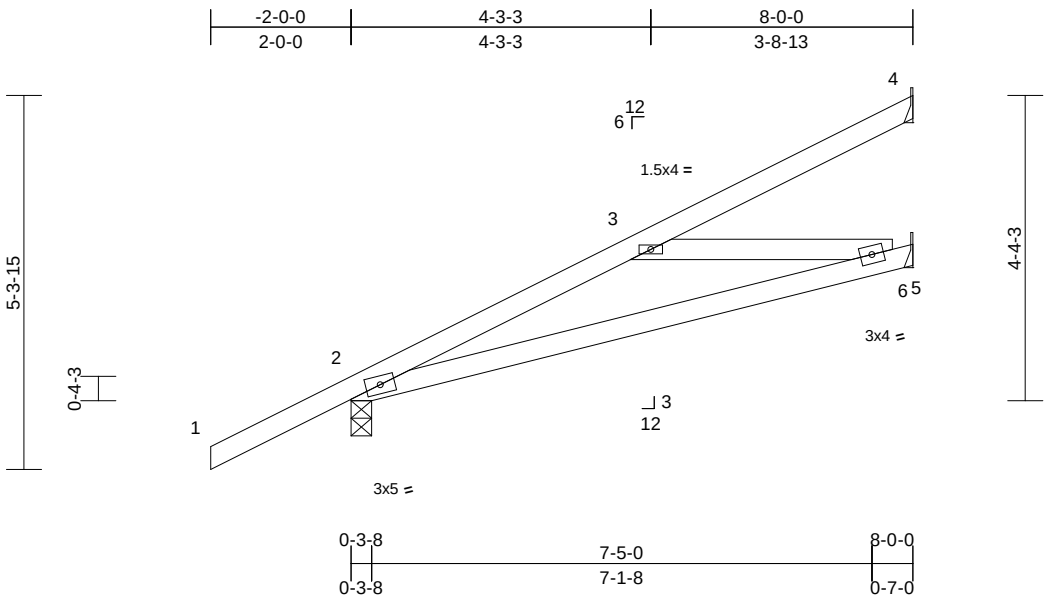

Scale = 1:32.8

Loading	(psf)	Spacing	2-0-0	CSI		DEFL	in	(loc)	l/defl	L/d	PLATES	GRIP
TCLL (roof)	20.0	Plate Grip DOL	1.25	TC	0.39	Vert(LL)	-0.11	6-9	>858	240	MT20	244/190
TCDL	7.0	Lumber DOL	1.25	BC	0.46	Vert(CT)	-0.19	6-9	>498	180		
BCLL	0.0*	Rep Stress Incr	YES	WB	0.12	Horz(CT)	0.01	5	n/a	n/a		
BCDL	7.0	Code	FBC2023/TPI2014	Matrix-MP							Weight: 35 lb	FT = 20%

LUMBER
TOP CHORD 2x4 SP No.2
BOT CHORD 2x4 SP No.2
WEBS 2x4 SP No.2

BRACING
TOP CHORD Structural wood sheathing directly applied or 6-0-0 oc purlins.
BOT CHORD Structural wood sheathing directly applied or 7-11-15 oc bracing.

REACTIONS (size) 2=0-3-8, 4= Mechanical, 5= Mechanical
Max Horiz 2=203 (LC 12)
Max Uplift 2=-152 (LC 12), 4=-68 (LC 12), 5=-35 (LC 12)
Max Grav 2=391 (LC 1), 4=90 (LC 17), 5=176 (LC 17)

FORCES (lb) - Maximum Compression/Maximum Tension
TOP CHORD 1-2=0/48, 2-3=-528/373, 3-4=-79/33
BOT CHORD 2-6=-537/515, 5-6=-29/44
WEBS 3-6=-494/515

NOTES
1) Wind: ASCE 7-22; Vult=130mph (3-second gust) Vasd=101mph; TCDL=4.2psf; BCDL=4.2psf; h=18ft; B=50ft; L=30ft; eave=4ft; Cat. II; Exp C; Enclosed; MWFRS (directional) and C-C Zone3 -2-0-0 to 0-9-15, Zone1 0-9-15 to 7-11-4 zone; cantilever left and right exposed ; end vertical left and right exposed;C-C for members and forces & MWFRS for reactions shown; Lumber DOL=1.60 plate grip DOL=1.60
2) Building Designer / Project engineer responsible for verifying applied roof live load shown covers rain loading requirements specific to the use of this truss component.
3) This truss has been designed for a 10.0 psf bottom chord live load nonconcurrent with any other live loads.
4) * This truss has been designed for a live load of 20.0psf on the bottom chord in all areas where a rectangle 3-06-00 tall by 2-00-00 wide will fit between the bottom chord and any other members.
5) Bearings are assumed to be: , Joint 2 SP No.2 .
6) Refer to girder(s) for truss to truss connections.
7) Bearing at joint(s) 2 considers parallel to grain value using ANSI/TPI 1 angle to grain formula. Building designer should verify capacity of bearing surface.
8) Provide mechanical connection (by others) of truss to bearing plate capable of withstanding 68 lb uplift at joint 4, 152 lb uplift at joint 2 and 35 lb uplift at joint 5.

LOAD CASE(S) Standard

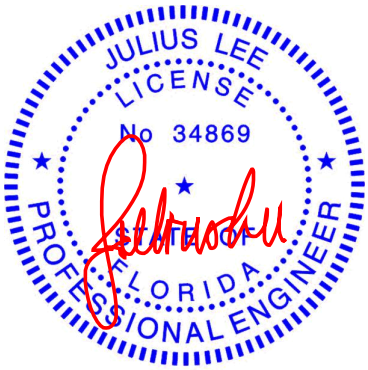

Julius Lee PE No. 34869
MiTek Inc. DBA MiTek USA FL Cert 6634
16023 Swingley Ridge Rd. Chesterfield, MO 63017

Date:

June 23,2025

WARNING - Verify design parameters and READ NOTES ON THIS AND INCLUDED MITEK REFERENCE PAGE MII-7473 rev. 1/2/2023 BEFORE USE.
Design valid for use only with MiTek® connectors. This design is based only upon parameters shown, and is for an individual building component, not a truss system. Before use, the building designer must verify the applicability of design parameters and properly incorporate this design into the overall building design. Bracing indicated is to prevent buckling of individual truss web and/or chord members only. Additional temporary and permanent bracing is always required for stability and to prevent collapse with possible personal injury and property damage. For general guidance regarding the fabrication, storage, delivery, erection and bracing of trusses and truss systems, see **ANSI/TPI1 Quality Criteria and DSB-22** available from Truss Plate Institute (www.tpinst.org) and **BCSI Building Component Safety Information** available from the Structural Building Component Association (www.sbcscomponents.com)

MiTek®
16023 Swingley Ridge Rd.
Chesterfield, MO 63017
314.434.1200 / MiTek-US.com

Job	Truss	Truss Type	Qty	Ply	Mitch Brown
250620-02KM	J02	Jack-Open	4	1	T37696826 Job Reference (optional)

Coastal Truss & Vinyl Siding, Patterson, GA - 31577,

Run: 8.73 S Feb 19 2025 Print: 8.730 S Feb 19 2025 MiTek Industries, Inc. Fri Jun 20 12:42:45 Page: 1
ID:ICf9K?ad02TtdzWztkagnRz4Ocu-RfC?PsB70Hq3NSgPqnL8w3uITXbGKWrCDoi7J4zJC?f

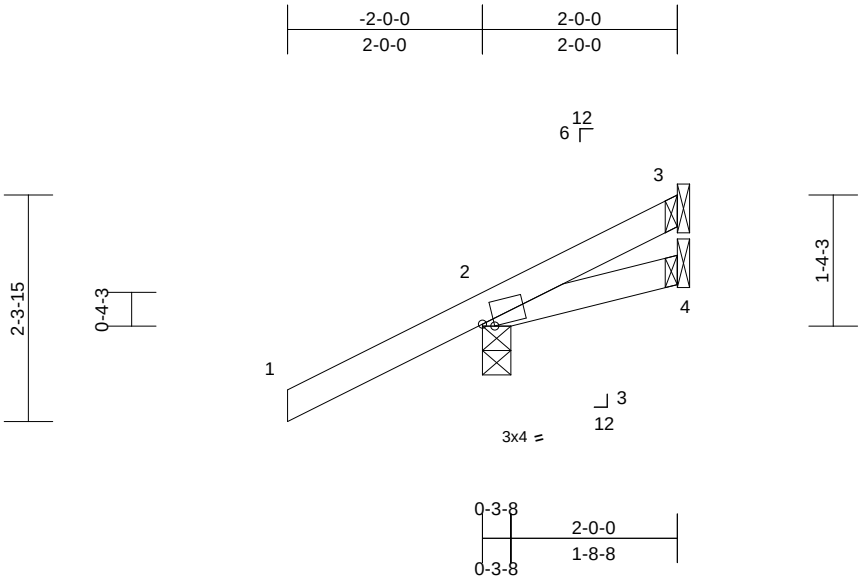

Scale = 1:23.6

Plate Offsets (X, Y): [2:0-1-7,Edge]

Loading	(psf)	Spacing	2-0-0	CSI		DEFL	in	(loc)	l/defl	L/d	PLATES	GRIP
TCLL (roof)	20.0	Plate Grip DOL	1.25	TC	0.45	Vert(LL)	0.00	4-7	>999	240	MT20	244/190
TCDL	7.0	Lumber DOL	1.25	BC	0.10	Vert(CT)	0.00	4-7	>999	180		
BCLL	0.0*	Rep Stress Incr	YES	WB	0.00	Horz(CT)	0.00	2	n/a	n/a		
BCDL	7.0	Code	FBC2023/TPI2014	Matrix-MP							Weight: 10 lb	FT = 20%

LUMBER
TOP CHORD 2x4 SP No.2
BOT CHORD 2x4 SP No.2

BRACING
TOP CHORD Structural wood sheathing directly applied or 2-0-0 oc purlins.
BOT CHORD Structural wood sheathing directly applied or 6-0-0 oc bracing.

REACTIONS (size) 2=0-3-8, 3= Mechanical, 4= Mechanical
Max Horiz 2=93 (LC 12)
Max Uplift 2=-164 (LC 12), 3=-9 (LC 9), 4=-4 (LC 1)
Max Grav 2=230 (LC 1), 3=21 (LC 17), 4=26 (LC 12)

FORCES (lb) - Maximum Compression/Maximum Tension
TOP CHORD 1-2=0/48, 2-3=-312/111
BOT CHORD 2-4=-124/323

NOTES
1) Wind: ASCE 7-22; Vult=130mph (3-second gust) Vasd=101mph; TCDL=4.2psf; BCDL=4.2psf; h=18ft; B=50ft; L=30ft; eave=4ft; Cat. II; Exp C; Enclosed; MWFRS (directional) and C-C Zone3 -2-0-0 to 0-9-15, Zone1 0-9-15 to 1-11-14 zone; cantilever left and right exposed ; end vertical left and right exposed;C-C for members and forces & MWFRS for reactions shown; Lumber DOL=1.60 plate grip DOL=1.60
2) Building Designer / Project engineer responsible for verifying applied roof live load shown covers rain loading requirements specific to the use of this truss component.
3) This truss has been designed for a 10.0 psf bottom chord live load nonconcurrent with any other live loads.
4) * This truss has been designed for a live load of 20.0psf on the bottom chord in all areas where a rectangle 3-06-00 tall by 2-00-00 wide will fit between the bottom chord and any other members.
5) Bearings are assumed to be: , Joint 2 SP No.2 .
6) Refer to girder(s) for truss to truss connections.
7) Bearing at joint(s) 2 considers parallel to grain value using ANSI/TPI 1 angle to grain formula. Building designer should verify capacity of bearing surface.
8) Provide mechanical connection (by others) of truss to bearing plate capable of withstanding 164 lb uplift at joint 2, 9 lb uplift at joint 3 and 4 lb uplift at joint 4.

LOAD CASE(S) Standard

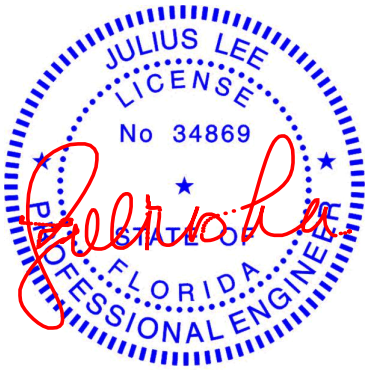

Julius Lee PE No. 34869
MiTek Inc. DBA MiTek USA FL Cert 6634
16023 Swingley Ridge Rd. Chesterfield, MO 63017

Date: June 23,2025

WARNING - Verify design parameters and READ NOTES ON THIS AND INCLUDED MITEK REFERENCE PAGE MII-7473 rev. 1/2/2023 BEFORE USE.
Design valid for use only with MiTek® connectors. This design is based only upon parameters shown, and is for an individual building component, not a truss system. Before use, the building designer must verify the applicability of design parameters and properly incorporate this design into the overall building design. Bracing indicated is to prevent buckling of individual truss web and/or chord members only. Additional temporary and permanent bracing is always required for stability and to prevent collapse with possible personal injury and property damage. For general guidance regarding the fabrication, storage, delivery, erection and bracing of trusses and truss systems, see **ANSI/TPI1 Quality Criteria and DSB-22** available from Truss Plate Institute (www.tpinst.org) and **BCSI Building Component Safety Information** available from the Structural Building Component Association (www.sbcscomponents.com)

MiTek®
16023 Swingley Ridge Rd.
Chesterfield, MO 63017
314.434.1200 / MiTek-US.com

Job	Truss	Truss Type	Qty	Ply	Mitch Brown
250620-02KM	J03	Jack-Open	4	1	T37696827 Job Reference (optional)

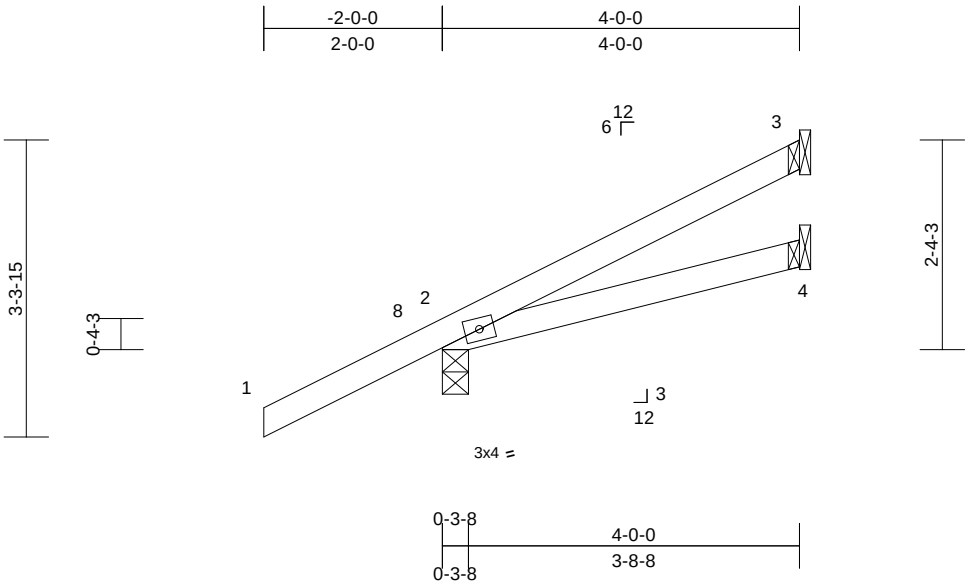

Scale = 1:25.8

Loading	(psf)	Spacing	2-0-0	CSI		DEFL	in	(loc)	l/defl	L/d	PLATES	GRIP
TCLL (roof)	20.0	Plate Grip DOL	1.25	TC	0.45	Vert(LL)	0.02	4-7	>999	240	MT20	244/190
TCDL	7.0	Lumber DOL	1.25	BC	0.14	Vert(CT)	-0.02	4-7	>999	180		
BCLL	0.0*	Rep Stress Incr	YES	WB	0.00	Horz(CT)	0.00	3	n/a	n/a		
BCDL	7.0	Code	FBC2023/TPI2014	Matrix-MP							Weight: 16 lb	FT = 20%

LUMBER
TOP CHORD 2x4 SP No.2
BOT CHORD 2x4 SP No.2

BRACING
TOP CHORD Structural wood sheathing directly applied or 4-0-0 oc purlins.
BOT CHORD Structural wood sheathing directly applied or 10-0-0 oc bracing.

REACTIONS (size) 2=0-3-8, 3= Mechanical, 4= Mechanical
Max Horiz 2=129 (LC 12)
Max Uplift 2=-145 (LC 12), 3=-42 (LC 12)
Max Grav 2=269 (LC 1), 3=81 (LC 17), 4=56 (LC 3)

FORCES (lb) - Maximum Compression/Maximum Tension
TOP CHORD 1-2=0/48, 2-3=-344/85
BOT CHORD 2-4=-101/313

NOTES
1) Wind: ASCE 7-22; Vult=130mph (3-second gust) Vasd=101mph; TCDL=4.2psf; BCDL=4.2psf; h=18ft; B=50ft; L=30ft; eave=4ft; Cat. II; Exp C; Enclosed; MWFRS (directional) and C-C Zone3 -2-0-0 to 0-9-15, Zone1 0-9-15 to 3-11-4 zone; cantilever left and right exposed ; end vertical left and right exposed;C-C for members and forces & MWFRS for reactions shown; Lumber DOL=1.60 plate grip DOL=1.60
2) Building Designer / Project engineer responsible for verifying applied roof live load shown covers rain loading requirements specific to the use of this truss component.
3) This truss has been designed for a 10.0 psf bottom chord live load nonconcurrent with any other live loads.
4) * This truss has been designed for a live load of 20.0psf on the bottom chord in all areas where a rectangle 3-06-00 tall by 2-00-00 wide will fit between the bottom chord and any other members.
5) Bearings are assumed to be: , Joint 2 SP No.2 .
6) Refer to girder(s) for truss to truss connections.
7) Bearing at joint(s) 2 considers parallel to grain value using ANSI/TPI 1 angle to grain formula. Building designer should verify capacity of bearing surface.
8) Provide mechanical connection (by others) of truss to bearing plate capable of withstanding 42 lb uplift at joint 3 and 145 lb uplift at joint 2.

LOAD CASE(S) Standard

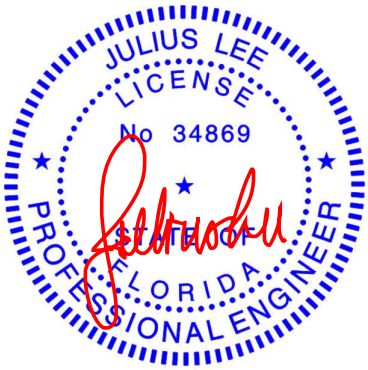

Julius Lee PE No. 34869
MiTek Inc. DBA MiTek USA FL Cert 6634
16023 Swingley Ridge Rd. Chesterfield, MO 63017
Date:

June 23,2025

WARNING - Verify design parameters and READ NOTES ON THIS AND INCLUDED MITEK REFERENCE PAGE MII-7473 rev. 1/2/2023 BEFORE USE.
Design valid for use only with MiTek® connectors. This design is based only upon parameters shown, and is for an individual building component, not a truss system. Before use, the building designer must verify the applicability of design parameters and properly incorporate this design into the overall building design. Bracing indicated is to prevent buckling of individual truss web and/or chord members only. Additional temporary and permanent bracing is always required for stability and to prevent collapse with possible personal injury and property damage. For general guidance regarding the fabrication, storage, delivery, erection and bracing of trusses and truss systems, see **ANSI/TPI1 Quality Criteria and DSB-22** available from Truss Plate Institute (www.tpinst.org) and **BCSI Building Component Safety Information** available from the Structural Building Component Association (www.sbcscomponents.com)

MiTek®
16023 Swingley Ridge Rd.
Chesterfield, MO 63017
314.434.1200 / MiTek-US.com

Job	Truss	Truss Type	Qty	Ply	Mitch Brown
250620-02KM	J04	Jack-Open	4	1	T37696828 Job Reference (optional)

Coastal Truss & Vinyl Siding, Patterson, GA - 31577,

Run: 8.73 S Feb 19 2025 Print: 8.730 S Feb 19 2025 MiTek Industries, Inc. Fri Jun 20 12:42:45 Page: 1
ID:ICf9K?ad02TtdzWztkagnRz4Ocu-RfC?PsB70Hq3NSgPqnL8w3uITXbGKWrCDoi7J4zJC?f

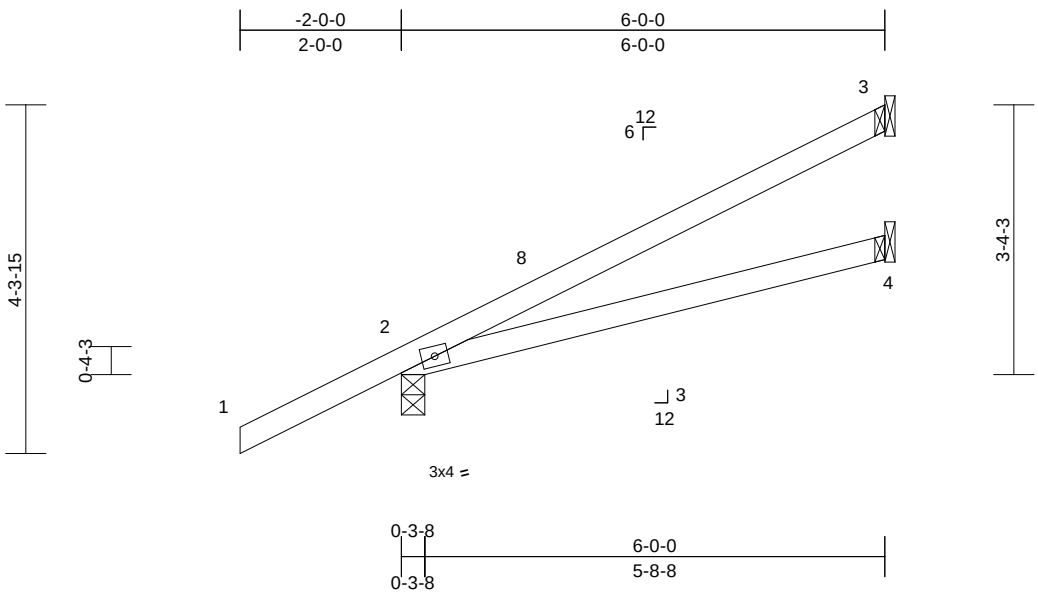

Scale = 1:28.6

Loading	(psf)	Spacing	2-0-0	CSI		DEFL	in	(loc)	l/defl	L/d	PLATES	GRIP
TCLL (roof)	20.0	Plate Grip DOL	1.25	TC	0.50	Vert(LL)	0.09	4-7	>806	240	MT20	244/190
TCDL	7.0	Lumber DOL	1.25	BC	0.39	Vert(CT)	-0.10	4-7	>708	180		
BCLL	0.0*	Rep Stress Incr	YES	WB	0.00	Horz(CT)	-0.01	3	n/a	n/a		
BCDL	7.0	Code	FBC2023/TPI2014	Matrix-MP							Weight: 23 lb	FT = 20%

LUMBER
TOP CHORD 2x4 SP No.2
BOT CHORD 2x4 SP No.2

BRACING
TOP CHORD Structural wood sheathing directly applied or 6-0-0 oc purlins.
BOT CHORD Structural wood sheathing directly applied or 10-0-0 oc bracing.

REACTIONS (size) 2=0-3-8, 3= Mechanical, 4= Mechanical
Max Horiz 2=166 (LC 12)
Max Uplift 2=-146 (LC 12), 3=-79 (LC 12)
Max Grav 2=328 (LC 1), 3=135 (LC 17), 4=89 (LC 3)

FORCES (lb) - Maximum Compression/Maximum Tension
TOP CHORD 1-2=0/48, 2-3=-343/61
BOT CHORD 2-4=-69/272

NOTES
1) Wind: ASCE 7-22; Vult=130mph (3-second gust) Vasd=101mph; TCDL=4.2psf; BCDL=4.2psf; h=18ft; B=50ft; L=30ft; eave=4ft; Cat. II; Exp C; Enclosed; MWFRS (directional) and C-C Zone3 -2-0-0 to 0-9-15, Zone1 0-9-15 to 5-11-4 zone; cantilever left and right exposed ; end vertical left and right exposed;C-C for members and forces & MWFRS for reactions shown; Lumber DOL=1.60 plate grip DOL=1.60
2) Building Designer / Project engineer responsible for verifying applied roof live load shown covers rain loading requirements specific to the use of this truss component.
3) This truss has been designed for a 10.0 psf bottom chord live load nonconcurrent with any other live loads.
4) * This truss has been designed for a live load of 20.0psf on the bottom chord in all areas where a rectangle 3-06-00 tall by 2-00-00 wide will fit between the bottom chord and any other members.
5) Bearings are assumed to be: , Joint 2 SP No.2 .
6) Refer to girder(s) for truss to truss connections.
7) Bearing at joint(s) 2 considers parallel to grain value using ANSI/TPI 1 angle to grain formula. Building designer should verify capacity of bearing surface.
8) Provide mechanical connection (by others) of truss to bearing plate capable of withstanding 79 lb uplift at joint 3 and 146 lb uplift at joint 2.

LOAD CASE(S) Standard

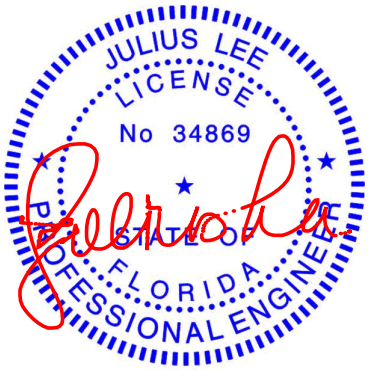

Julius Lee PE No. 34869
MiTek Inc. DBA MiTek USA FL Cert 6634
16023 Swingley Ridge Rd. Chesterfield, MO 63017

Date: June 23,2025

WARNING - Verify design parameters and READ NOTES ON THIS AND INCLUDED MITEK REFERENCE PAGE MII-7473 rev. 1/2/2023 BEFORE USE.
Design valid for use only with MiTek® connectors. This design is based only upon parameters shown, and is for an individual building component, not a truss system. Before use, the building designer must verify the applicability of design parameters and properly incorporate this design into the overall building design. Bracing indicated is to prevent buckling of individual truss web and/or chord members only. Additional temporary and permanent bracing is always required for stability and to prevent collapse with possible personal injury and property damage. For general guidance regarding the fabrication, storage, delivery, erection and bracing of trusses and truss systems, see **ANSI/TPI1 Quality Criteria and DSB-22** available from Truss Plate Institute (www.tpinst.org) and **BCSI Building Component Safety Information** available from the Structural Building Component Association (www.sbcscomponents.com)

MiTek®
16023 Swingley Ridge Rd.
Chesterfield, MO 63017
314.434.1200 / MiTek-US.com

Job	Truss	Truss Type	Qty	Ply	Mitch Brown
250620-02KM	H08	Half Hip Girder	1	1	T37696829 Job Reference (optional)

Coastal Truss & Vinyl Siding, Patterson, GA - 31577,

Run: 8.73 S Feb 19 2025 Print: 8.730 S Feb 19 2025 MiTek Industries, Inc. Fri Jun 20 12:42:44 Page: 1
ID:yWOhr6k9Bk_A3pRGaFoUGzz4Oci-RfC?PsB70Hq3NSgPqnL8w3uITXbGKWrCDoi7J4zJC?f

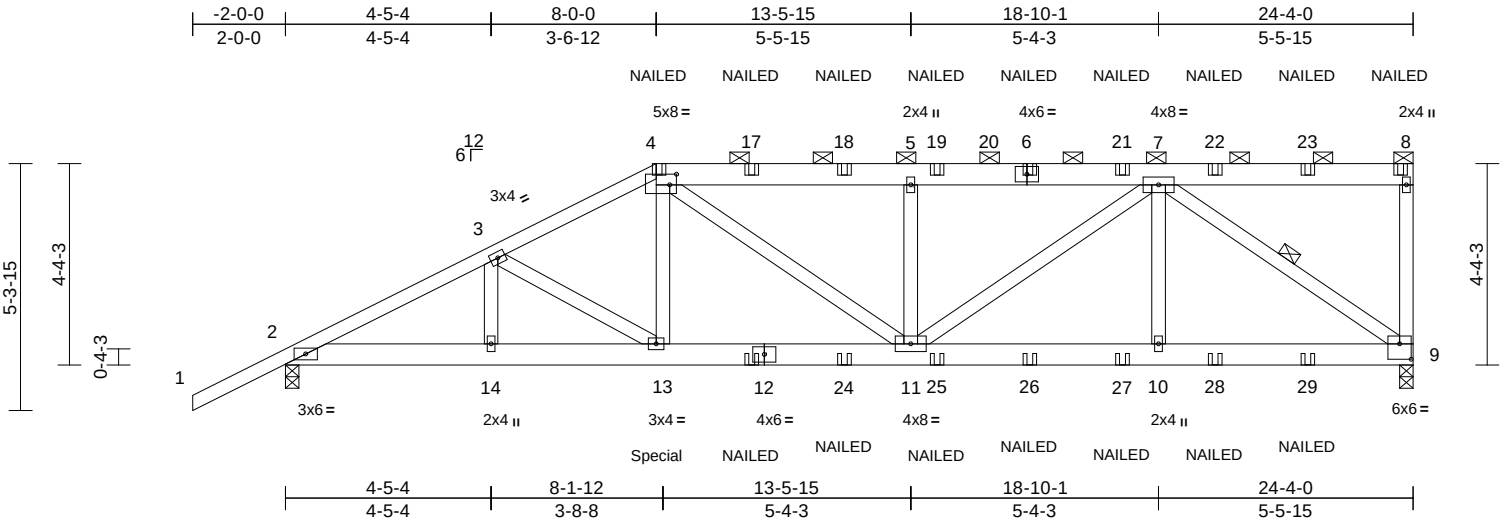

Scale = 1:49.7

Plate Offsets (X, Y): [4:0-1-12,0-2-12], [9:0-3-0,0-4-0]

Loading	(psf)	Spacing	2-0-0	CSI		DEFL	in	(loc)	l/defl	L/d	PLATES	GRIP
TCLL (roof)	20.0	Plate Grip DOL	1.25	TC	0.47	Vert(LL)	-0.13	11-13	>999	240	MT20	244/190
TCDL	7.0	Lumber DOL	1.25	BC	0.71	Vert(CT)	-0.22	11-13	>999	180		
BCLL	0.0*	Rep Stress Incr	NO	WB	0.58	Horz(CT)	0.07	9	n/a	n/a		
BCDL	7.0	Code	FBC2023/TPI2014	Matrix-MS							Weight: 168 lb	FT = 20%

LUMBER
TOP CHORD 2x6 SP No.2 *Except* 1-4:2x4 SP No.2
BOT CHORD 2x6 SP No.2
WEBS 2x4 SP No.2

BRACING
TOP CHORD Structural wood sheathing directly applied or 2-11-4 oc purlins, except end verticals, and 2-0-0 oc purlins (3-7-12 max.): 4-8.
BOT CHORD Structural wood sheathing directly applied or 7-2-15 oc bracing.
WEBS 1 Row at midpt 7-9

REACTIONS (size) 2=0-3-8, 9=0-3-8
Max Horiz 2=202 (LC 7)
Max Uplift 2=-646 (LC 8), 9=-716 (LC 5)
Max Grav 2=1838 (LC 13), 9=2095 (LC 13)

FORCES (lb) - Maximum Compression/Maximum Tension
TOP CHORD 1-2=0/48, 2-3=-3566/1090, 3-4=-3366/1079, 4-5=-3310/1098, 5-7=-3306/1095, 7-8=-81/67, 8-9=-365/220
BOT CHORD 2-14=-1040/3219, 13-14=-1040/3219, 11-13=-994/3052, 10-11=-769/2311, 9-10=-769/2311
WEBS 3-14=0/99, 3-13=-230/143, 4-13=-152/867, 4-11=-151/461, 5-11=-711/421, 7-11=-397/1265, 7-10=0/443, 7-9=-2807/894

NOTES
1) Unbalanced roof live loads have been considered for this design.
2) Wind: ASCE 7-22; Vult=130mph (3-second gust) Vasd=101mph; TCDL=4.2psf; BCDL=4.2psf; h=18ft; B=50ft; L=30ft; eave=4ft; Cat. II; Exp C; Enclosed; MWFRS (directional); cantilever left and right exposed ; end vertical left and right exposed; Lumber DOL=1.60 plate grip DOL=1.60
3) Building Designer / Project engineer responsible for verifying applied roof live load shown covers rain loading requirements specific to the use of this truss component.
4) Provide adequate drainage to prevent water ponding.
5) This truss has been designed for a 10.0 psf bottom chord live load nonconcurrent with any other live loads.
6) * This truss has been designed for a live load of 20.0psf on the bottom chord in all areas where a rectangle 3-06-00 tall by 2-00-00 wide will fit between the bottom chord and any other members.
7) All bearings are assumed to be SP No.2 .
8) Provide mechanical connection (by others) of truss to bearing plate capable of withstanding 716 lb uplift at joint 9 and 646 lb uplift at joint 2.
9) Graphical purlin representation does not depict the size or the orientation of the purlin along the top and/or bottom chord.
10) "NAILED" indicates 3-10d (0.148"x3") or 3-12d (0.148"x3.25") toe-nails per NDS guidlines.
11) Hanger(s) or other connection device(s) shall be provided sufficient to support concentrated load(s) 594 lb down and 153 lb up at 8-0-0 on bottom chord. The design/selection of such connection device(s) is the responsibility of others.
12) In the LOAD CASE(S) section, loads applied to the face of the truss are noted as front (F) or back (B).

LOAD CASE(S) Standard
1) Dead + Roof Live (balanced): Lumber Increase=1.25, Plate Increase=1.25
Uniform Loads (lb/ft)
Vert: 1-4=-54, 4-8=-54, 2-9=-14
Concentrated Loads (lb)
Vert: 4=-128 (B), 6=-128 (B), 8=-152 (B), 12=-60 (B), 13=-551 (B), 17=-128 (B), 18=-128 (B), 19=-128 (B), 21=-128 (B), 22=-128 (B), 23=-128 (B), 24=-60 (B), 25=-60 (B), 26=-60 (B), 27=-60 (B), 28=-60 (B), 29=-60 (B)

Julius Lee PE No. 34869
MiTek Inc. DBA MiTek USA FL Cert 6634
16023 Swingley Ridge Rd. Chesterfield, MO 63017
Date:

June 23,2025

WARNING - Verify design parameters and READ NOTES ON THIS AND INCLUDED MITEK REFERENCE PAGE MII-7473 rev. 1/2/2023 BEFORE USE.
Design valid for use only with MiTek® connectors. This design is based only upon parameters shown, and is for an individual building component, not a truss system. Before use, the building designer must verify the applicability of design parameters and properly incorporate this design into the overall building design. Bracing indicated is to prevent buckling of individual truss web and/or chord members only. Additional temporary and permanent bracing is always required for stability and to prevent collapse with possible personal injury and property damage. For general guidance regarding the fabrication, storage, delivery, erection and bracing of trusses and truss systems, see **ANSI/TPI1 Quality Criteria and DSB-22** available from Truss Plate Institute (www.tpinst.org) and **BCSI Building Component Safety Information** available from the Structural Building Component Association (www.sbcscomponents.com)

MiTek®
16023 Swingley Ridge Rd.
Chesterfield, MO 63017
314.434.1200 / MiTek-US.com

Job	Truss	Truss Type	Qty	Ply	Mitch Brown
250620-02KM	H09	Half Hip	1	1	T37696830 Job Reference (optional)

Coastal Truss & Vinyl Siding, Patterson, GA - 31577,

Run: 8.73 S Feb 19 2025 Print: 8.730 S Feb 19 2025 MiTek Industries, Inc. Fri Jun 20 12:42:44 Page: 1
ID:MqYOvJZNURD9OfMamJYCi0z4Ocw-RfC?PsB70Hq3NSgPqnL8w3uITXbGKWrCDoi7J4zJC?f

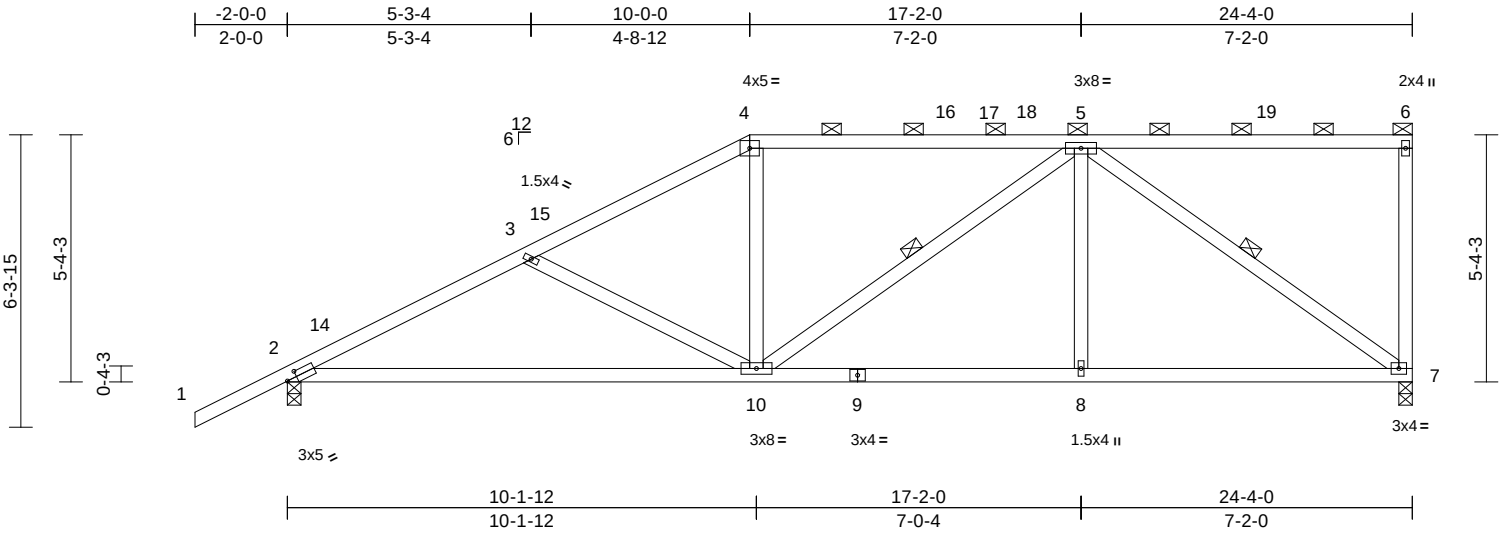

Scale = 1:49.8

Plate Offsets (X, Y): [2:0-2-10,0-1-8]

Loading	(psf)	Spacing	2-0-0	CSI		DEFL	in	(loc)	l/defl	L/d	PLATES	GRIP
TCLL (roof)	20.0	Plate Grip DOL	1.25	TC	0.61	Vert(LL)	-0.22	10-13	>999	240	MT20	244/190
TCDL	7.0	Lumber DOL	1.25	BC	0.70	Vert(CT)	-0.38	10-13	>763	180		
BCLL	0.0*	Rep Stress Incr	YES	WB	0.36	Horz(CT)	0.04	7	n/a	n/a		
BCDL	7.0	Code	FBC2023/TPI2014	Matrix-MS							Weight: 131 lb	FT = 20%

LUMBER
TOP CHORD 2x4 SP No.2
BOT CHORD 2x4 SP No.2
WEBS 2x4 SP No.2

BRACING
TOP CHORD Structural wood sheathing directly applied or 4-8-9 oc purlins, except end verticals, and 2-0-0 oc purlins (5-2-3 max.): 4-6.
BOT CHORD Structural wood sheathing directly applied or 6-10-6 oc bracing.
WEBS 1 Row at midpt 5-10, 5-7

REACTIONS (size) 2=0-3-8, 7=0-3-8
Max Horiz 2=254 (LC 11)
Max Uplift 2=-340 (LC 12), 7=-261 (LC 9)
Max Grav 2=935 (LC 1), 7=818 (LC 1)

FORCES (lb) - Maximum Compression/Maximum Tension
TOP CHORD 1-2=0/48, 2-3=-1439/516, 3-4=-1150/429, 4-5=-977/423, 5-6=-130/131, 6-7=-157/101
BOT CHORD 2-10=-719/1258, 8-10=-433/872, 7-8=-433/872
WEBS 3-10=-342/227, 4-10=0/296, 5-10=-103/163, 5-8=0/236, 5-7=-1051/425

NOTES
1) Unbalanced roof live loads have been considered for this design.
2) Wind: ASCE 7-22; Vult=130mph (3-second gust) Vasd=101mph; TCDL=4.2psf; BCDL=4.2psf; h=18ft; B=50ft; L=30ft; eave=4ft; Cat. II; Exp C; Enclosed; MWFRS (directional) and C-C Zone3 -2-0-0 to 1-0-0, Zone1 1-0-0 to 10-0-0, Zone2 10-0-0 to 14-2-15, Zone1 14-2-15 to 24-2-4 zone; cantilever left and right exposed ; end vertical left and right exposed;C-C for members and forces & MWFRS for reactions shown; Lumber DOL=1.60 plate grip DOL=1.60
3) Building Designer / Project engineer responsible for verifying applied roof live load shown covers rain loading requirements specific to the use of this truss component.
4) Provide adequate drainage to prevent water ponding.
5) This truss has been designed for a 10.0 psf bottom chord live load nonconcurrent with any other live loads.
6) * This truss has been designed for a live load of 20.0psf on the bottom chord in all areas where a rectangle 3-06-00 tall by 2-00-00 wide will fit between the bottom chord and any other members.
7) All bearings are assumed to be SP No.2 .
8) Provide mechanical connection (by others) of truss to bearing plate capable of withstanding 261 lb uplift at joint 7 and 340 lb uplift at joint 2.
9) Graphical purlin representation does not depict the size or the orientation of the purlin along the top and/or bottom chord.

LOAD CASE(S) Standard

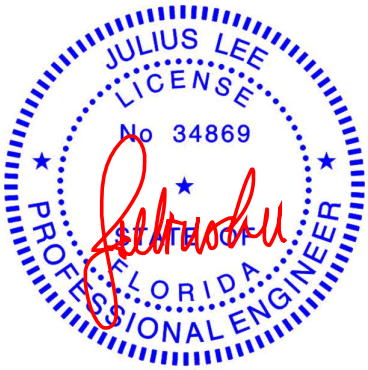

Julius Lee PE No. 34869
MiTek Inc. DBA MiTek USA FL Cert 6634
16023 Swingley Ridge Rd. Chesterfield, MO 63017

Date:

June 23,2025

WARNING - Verify design parameters and READ NOTES ON THIS AND INCLUDED MITEK REFERENCE PAGE MII-7473 rev. 1/2/2023 BEFORE USE.
Design valid for use only with MiTek® connectors. This design is based only upon parameters shown, and is for an individual building component, not a truss system. Before use, the building designer must verify the applicability of design parameters and properly incorporate this design into the overall building design. Bracing indicated is to prevent buckling of individual truss web and/or chord members only. Additional temporary and permanent bracing is always required for stability and to prevent collapse with possible personal injury and property damage. For general guidance regarding the fabrication, storage, delivery, erection and bracing of trusses and truss systems, see **ANSI/TPI1 Quality Criteria and DSB-22** available from Truss Plate Institute (www.tpinst.org) and **BCSI Building Component Safety Information** available from the Structural Building Component Association (www.sbcscomponents.com)

MiTek®
16023 Swingley Ridge Rd.
Chesterfield, MO 63017
314.434.1200 / MiTek-US.com

Job	Truss	Truss Type	Qty	Ply	Mitch Brown
250620-02KM	H10	Half Hip	1	1	T37696831 Job Reference (optional)

Coastal Truss & Vinyl Siding, Patterson, GA - 31577,

Run: 8.73 S Feb 19 2025 Print: 8.730 S Feb 19 2025 MiTek Industries, Inc. Fri Jun 20 12:42:44 Page: 1
ID:MqYOvJZNURD9OfMamJYCi0z4Ocw-RfC?PsB70Hq3NSgPqnL8w3uITXbGKWrCDoi7J4zJC?f

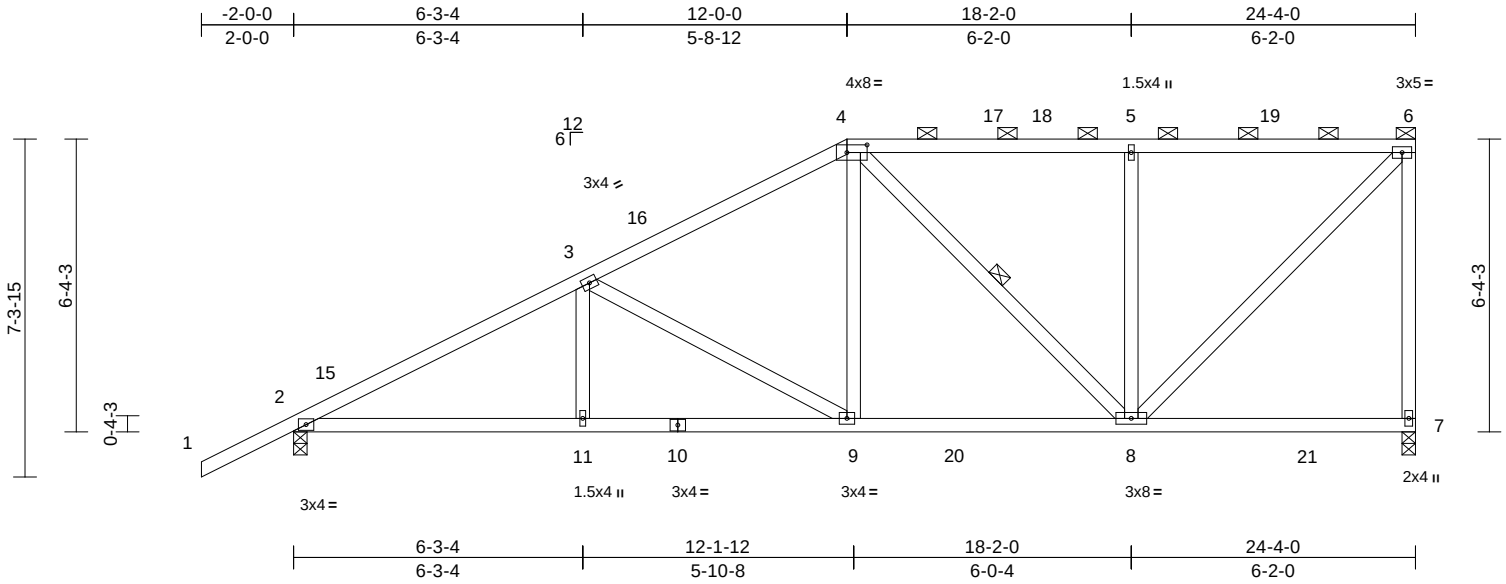

Scale = 1:50

Plate Offsets (X, Y): [4:0-5-4,0-2-0]

Loading	(psf)	Spacing	2-0-0	CSI		DEFL	in	(loc)	l/defl	L/d	PLATES	GRIP
TCLL (roof)	20.0	Plate Grip DOL	1.25	TC	0.53	Vert(LL)	-0.07	11-14	>999	240	MT20	244/190
TCDL	7.0	Lumber DOL	1.25	BC	0.48	Vert(CT)	-0.12	11-14	>999	180		
BCLL	0.0*	Rep Stress Incr	YES	WB	0.49	Horz(CT)	0.04	7	n/a	n/a		
BCDL	7.0	Code	FBC2023/TPI2014	Matrix-MS							Weight: 142 lb	FT = 20%

LUMBER
TOP CHORD 2x4 SP No.2
BOT CHORD 2x4 SP No.2
WEBS 2x4 SP No.2

BRACING
TOP CHORD Structural wood sheathing directly applied or 4-3-9 oc purlins, except end verticals, and 2-0-0 oc purlins (6-0-0 max.): 4-6.
BOT CHORD Structural wood sheathing directly applied or 6-11-15 oc bracing.
WEBS 1 Row at midpt 4-8

REACTIONS (size) 2=0-3-8, 7=0-3-8
Max Horiz 2=300 (LC 11)
Max Uplift 2=-338 (LC 12), 7=-264 (LC 9)
Max Grav 2=1076 (LC 17), 7=976 (LC 17)

FORCES (lb) - Maximum Compression/Maximum Tension
TOP CHORD 1-2=0/48, 2-3=-1700/479, 3-4=-1157/412, 4-5=-753/363, 5-6=-753/363, 6-7=-873/360
BOT CHORD 2-11=-709/1564, 9-11=-709/1564, 8-9=-497/1044, 7-8=-130/146
WEBS 3-11=0/214, 3-9=-605/243, 4-9=-70/482, 4-8=-353/172, 5-8=-386/223, 6-8=-390/1074

NOTES
1) Unbalanced roof live loads have been considered for this design.
2) Wind: ASCE 7-22; Vult=130mph (3-second gust) Vasd=101mph; TCDL=4.2psf; BCDL=4.2psf; h=18ft; B=50ft; L=30ft; eave=4ft; Cat. II; Exp C; Enclosed; MWFRS (directional) and C-C Zone3 -2-0-0 to 1-0-0, Zone1 1-0-0 to 12-0-0, Zone2 12-0-0 to 16-2-15, Zone1 16-2-15 to 24-2-4 zone; cantilever left and right exposed ; end vertical left and right exposed;C-C for members and forces & MWFRS for reactions shown; Lumber DOL=1.60 plate grip DOL=1.60
3) Building Designer / Project engineer responsible for verifying applied roof live load shown covers rain loading requirements specific to the use of this truss component.
4) Provide adequate drainage to prevent water ponding.
5) This truss has been designed for a 10.0 psf bottom chord live load nonconcurrent with any other live loads.
6) * This truss has been designed for a live load of 20.0psf on the bottom chord in all areas where a rectangle 3-06-00 tall by 2-00-00 wide will fit between the bottom chord and any other members, with BCDL = 7.0psf.
7) All bearings are assumed to be SP No.2 .
8) Provide mechanical connection (by others) of truss to bearing plate capable of withstanding 264 lb uplift at joint 7 and 338 lb uplift at joint 2.
9) Graphical purlin representation does not depict the size or the orientation of the purlin along the top and/or bottom chord.

LOAD CASE(S) Standard

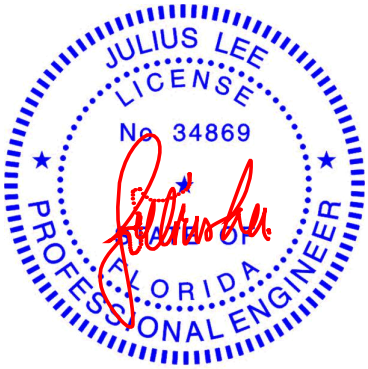

Julius Lee PE No. 34869
MiTek Inc. DBA MiTek USA FL Cert 6634
16023 Swingley Ridge Rd. Chesterfield, MO 63017

Date:

June 23,2025

WARNING - Verify design parameters and READ NOTES ON THIS AND INCLUDED MITEK REFERENCE PAGE MII-7473 rev. 1/2/2023 BEFORE USE.
Design valid for use only with MiTek® connectors. This design is based only upon parameters shown, and is for an individual building component, not a truss system. Before use, the building designer must verify the applicability of design parameters and properly incorporate this design into the overall building design. Bracing indicated is to prevent buckling of individual truss web and/or chord members only. Additional temporary and permanent bracing is always required for stability and to prevent collapse with possible personal injury and property damage. For general guidance regarding the fabrication, storage, delivery, erection and bracing of trusses and truss systems, see **ANSI/TPI1 Quality Criteria and DSB-22** available from Truss Plate Institute (www.tpinst.org) and **BCSI Building Component Safety Information** available from the Structural Building Component Association (www.sbcscomponents.com)

MiTek®
16023 Swingley Ridge Rd.
Chesterfield, MO 63017
314.434.1200 / MiTek-US.com

Job	Truss	Truss Type	Qty	Ply	Mitch Brown
250620-02KM	H11	Half Hip	1	1	T37696832 Job Reference (optional)

Coastal Truss & Vinyl Siding, Patterson, GA - 31577,

Run: 8.73 S Feb 19 2025 Print: 8.730 S Feb 19 2025 MiTek Industries, Inc. Fri Jun 20 12:42:44 Page: 1
ID:MqYOvJZNURD9OfMamJYCi0z4Ocw-RfC?PsB70Hq3NSgPqnL8w3uITXbGKWrCDoi7J4zJC?f

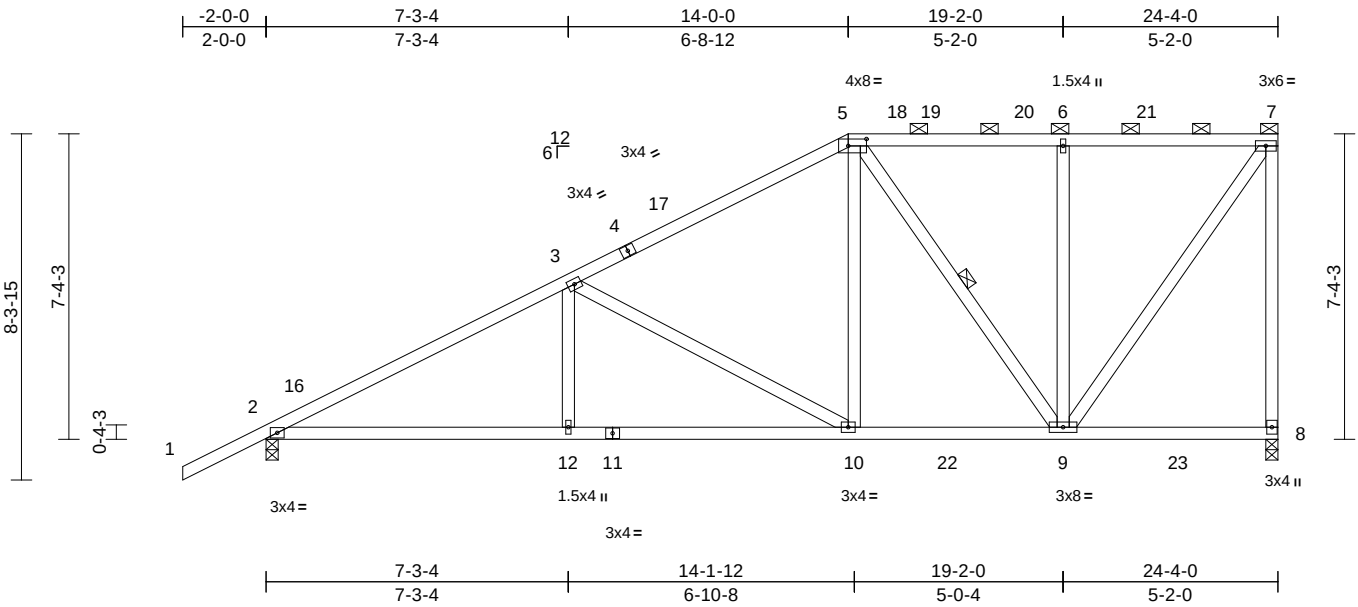

Scale = 1:55.4

Plate Offsets (X, Y): [5:0-5-4,0-2-0]

Loading	(psf)	Spacing	2-0-0	CSI		DEFL	in	(loc)	l/defl	L/d	PLATES	GRIP
TCLL (roof)	20.0	Plate Grip DOL	1.25	TC	0.87	Vert(LL)	-0.10	12-15	>999	240	MT20	244/190
TCDL	7.0	Lumber DOL	1.25	BC	0.56	Vert(CT)	-0.17	12-15	>999	180		
BCLL	0.0*	Rep Stress Incr	YES	WB	0.77	Horz(CT)	0.04	8	n/a	n/a		
BCDL	7.0	Code	FBC2023/TPI2014	Matrix-MS							Weight: 149 lb	FT = 20%

LUMBER
TOP CHORD 2x4 SP No.2
BOT CHORD 2x4 SP No.2
WEBS 2x4 SP No.2

BRACING
TOP CHORD Structural wood sheathing directly applied or 4-2-2 oc purlins, except end verticals, and 2-0-0 oc purlins (6-0-0 max.): 5-7.
BOT CHORD Structural wood sheathing directly applied or 6-10-14 oc bracing.
WEBS 1 Row at midpt 5-9

REACTIONS (size) 2=0-3-8, 8=0-3-8
Max Horiz 2=347 (LC 11)
Max Uplift 2=-336 (LC 12), 8=-267 (LC 9)
Max Grav 2=1077 (LC 17), 8=994 (LC 17)

FORCES (lb) - Maximum Compression/Maximum Tension
TOP CHORD 1-2=0/48, 2-3=-1656/474, 3-5=-993/382, 5-6=-582/330, 6-7=-582/330, 7-8=-902/372
BOT CHORD 2-12=-712/1533, 10-12=-712/1533, 9-10=-460/895, 8-9=-153/169
WEBS 3-12=0/260, 3-10=-736/287, 5-10=-88/540, 5-9=-484/223, 6-9=-322/190, 7-9=-377/994

NOTES
1) Unbalanced roof live loads have been considered for this design.
2) Wind: ASCE 7-22; Vult=130mph (3-second gust) Vasd=101mph; TCDL=4.2psf; BCDL=4.2psf; h=18ft; B=50ft; L=30ft; eave=4ft; Cat. II; Exp C; Enclosed; MWFRS (directional) and C-C Zone3 -2-0-0 to 1-0-0, Zone1 1-0-0 to 14-0-0, Zone2 14-0-0 to 18-2-15, Zone1 18-2-15 to 24-2-4 zone; cantilever left and right exposed ; end vertical left and right exposed;C-C for members and forces & MWFRS for reactions shown; Lumber DOL=1.60 plate grip DOL=1.60
3) Building Designer / Project engineer responsible for verifying applied roof live load shown covers rain loading requirements specific to the use of this truss component.
4) Provide adequate drainage to prevent water ponding.
5) This truss has been designed for a 10.0 psf bottom chord live load nonconcurrent with any other live loads.
6) * This truss has been designed for a live load of 20.0psf on the bottom chord in all areas where a rectangle 3-06-00 tall by 2-00-00 wide will fit between the bottom chord and any other members, with BCDL = 7.0psf.
7) All bearings are assumed to be SP No.2 .
8) Provide mechanical connection (by others) of truss to bearing plate capable of withstanding 267 lb uplift at joint 8 and 336 lb uplift at joint 2.
9) Graphical purlin representation does not depict the size or the orientation of the purlin along the top and/or bottom chord.

LOAD CASE(S) Standard

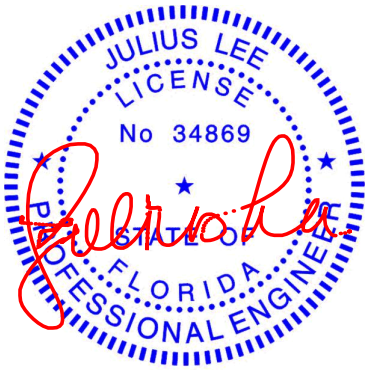

Julius Lee PE No. 34869
MiTek Inc. DBA MiTek USA FL Cert 6634
16023 Swingley Ridge Rd. Chesterfield, MO 63017
Date:

June 23,2025

WARNING - Verify design parameters and READ NOTES ON THIS AND INCLUDED MITEK REFERENCE PAGE MII-7473 rev. 1/2/2023 BEFORE USE.
Design valid for use only with MiTek® connectors. This design is based only upon parameters shown, and is for an individual building component, not a truss system. Before use, the building designer must verify the applicability of design parameters and properly incorporate this design into the overall building design. Bracing indicated is to prevent buckling of individual truss web and/or chord members only. Additional temporary and permanent bracing is always required for stability and to prevent collapse with possible personal injury and property damage. For general guidance regarding the fabrication, storage, delivery, erection and bracing of trusses and truss systems, see **ANSI/TPI1 Quality Criteria and DSB-22** available from Truss Plate Institute (www.tpinst.org) and **BCSI Building Component Safety Information** available from the Structural Building Component Association (www.sbcscomponents.com)

MiTek®
16023 Swingley Ridge Rd.
Chesterfield, MO 63017
314.434.1200 / MiTek-US.com

Job	Truss	Truss Type	Qty	Ply	Mitch Brown
250620-02KM	H12	Half Hip	1	1	T37696833 Job Reference (optional)

Coastal Truss & Vinyl Siding, Patterson, GA - 31577,

Run: 8.73 S Feb 19 2025 Print: 8.730 S Feb 19 2025 MiTek Industries, Inc. Fri Jun 20 12:42:44 Page: 1
ID:q06m6fa?FkL0?pxnK03RFDz4Ocv-RfC?PsB70Hq3NSgPqnL8w3uITXbGKWrCDoi7J4zJC?f

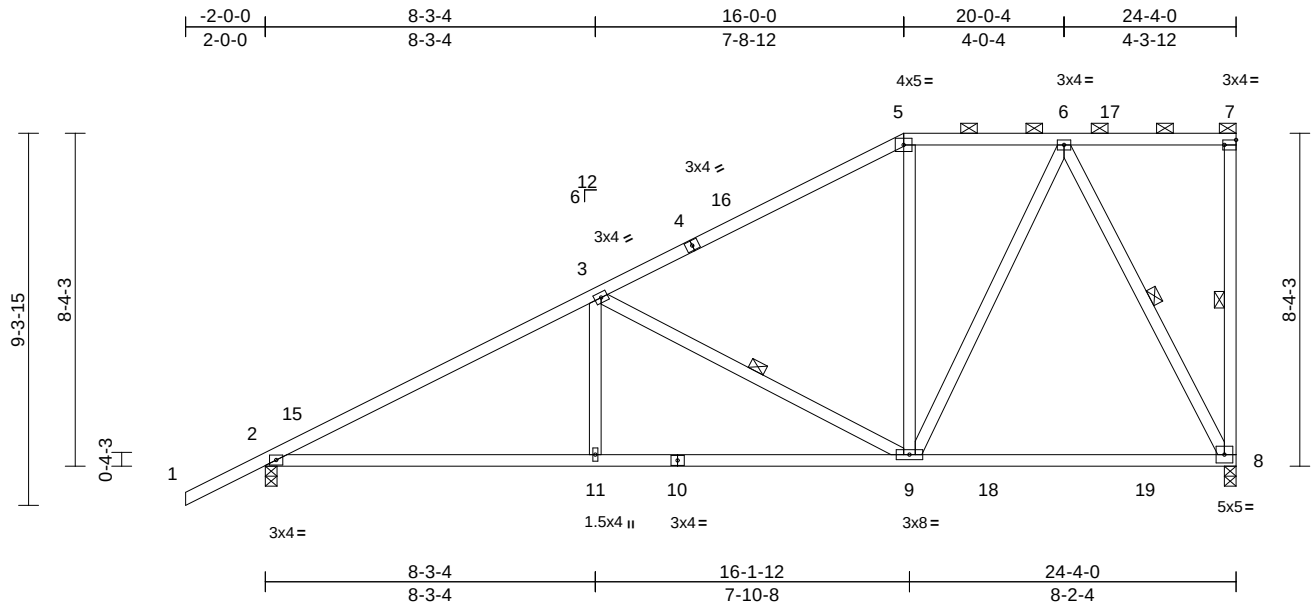

Scale = 1:57.8

Plate Offsets (X, Y): [7:Edge,0-1-8]

Loading	(psf)	Spacing	2-0-0	CSI		DEFL	in	(loc)	l/defl	L/d	PLATES	GRIP
TCLL (roof)	20.0	Plate Grip DOL	1.25	TC	0.69	Vert(LL)	-0.22	8-9	>999	240	MT20	244/190
TCDL	7.0	Lumber DOL	1.25	BC	0.67	Vert(CT)	-0.31	8-9	>931	180		
BCLL	0.0*	Rep Stress Incr	YES	WB	0.34	Horz(CT)	0.04	8	n/a	n/a		
BCDL	7.0	Code	FBC2023/TPI2014	Matrix-MS							Weight: 146 lb	FT = 20%

LUMBER
TOP CHORD 2x4 SP No.2
BOT CHORD 2x4 SP No.2
WEBS 2x4 SP No.2

BRACING
TOP CHORD Structural wood sheathing directly applied or 3-11-5 oc purlins, except end verticals, and 2-0-0 oc purlins (6-0-0 max.): 5-7.
BOT CHORD Structural wood sheathing directly applied or 6-9-14 oc bracing.
WEBS 1 Row at midpt 7-8, 3-9, 6-8

REACTIONS (size) 2=0-3-8, 8=0-3-8
Max Horiz 2=393 (LC 11)
Max Uplift 2=-334 (LC 12), 8=-269 (LC 9)
Max Grav 2=1074 (LC 17), 8=1006 (LC 17)

FORCES (lb) - Maximum Compression/Maximum Tension
TOP CHORD 1-2=0/48, 2-3=-1590/464, 3-5=-838/351, 5-6=-687/366, 6-7=-185/196, 7-8=-103/91
BOT CHORD 2-11=-709/1484, 9-11=-709/1484, 8-9=-307/452
WEBS 3-11=0/284, 3-9=-838/339, 5-9=-20/151, 6-9=-232/675, 6-8=-897/413

NOTES
1) Unbalanced roof live loads have been considered for this design.
2) Wind: ASCE 7-22; Vult=130mph (3-second gust) Vasd=101mph; TCDL=4.2psf; BCDL=4.2psf; h=18ft; B=50ft; L=30ft; eave=4ft; Cat. II; Exp C; Enclosed; MWFRS (directional) and C-C Zone3 -2-0-0 to 1-0-0, Zone1 1-0-0 to 16-0-0, Zone2 16-0-0 to 20-0-4, Zone1 20-0-4 to 24-2-4 zone; cantilever left and right exposed ; end vertical left and right exposed;C-C for members and forces & MWFRS for reactions shown; Lumber DOL=1.60 plate grip DOL=1.60
3) Building Designer / Project engineer responsible for verifying applied roof live load shown covers rain loading requirements specific to the use of this truss component.
4) Provide adequate drainage to prevent water ponding.
5) This truss has been designed for a 10.0 psf bottom chord live load nonconcurrent with any other live loads.
6) * This truss has been designed for a live load of 20.0psf on the bottom chord in all areas where a rectangle 3-06-00 tall by 2-00-00 wide will fit between the bottom chord and any other members, with BCDL = 7.0psf.
7) All bearings are assumed to be SP No.2 .
8) Provide mechanical connection (by others) of truss to bearing plate capable of withstanding 269 lb uplift at joint 8 and 334 lb uplift at joint 2.
9) Graphical purlin representation does not depict the size or the orientation of the purlin along the top and/or bottom chord.

LOAD CASE(S) Standard

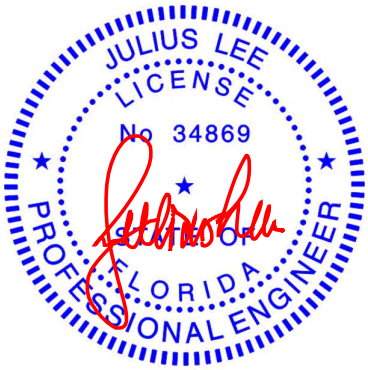

Julius Lee PE No. 34869
MiTek Inc. DBA MiTek USA FL Cert 6634
16023 Swingley Ridge Rd. Chesterfield, MO 63017
Date:

June 23,2025

WARNING - Verify design parameters and READ NOTES ON THIS AND INCLUDED MITEK REFERENCE PAGE MII-7473 rev. 1/2/2023 BEFORE USE.
Design valid for use only with MiTek® connectors. This design is based only upon parameters shown, and is for an individual building component, not a truss system. Before use, the building designer must verify the applicability of design parameters and properly incorporate this design into the overall building design. Bracing indicated is to prevent buckling of individual truss web and/or chord members only. Additional temporary and permanent bracing is always required for stability and to prevent collapse with possible personal injury and property damage. For general guidance regarding the fabrication, storage, delivery, erection and bracing of trusses and truss systems, see **ANSI/TPI1 Quality Criteria and DSB-22** available from Truss Plate Institute (www.tpinst.org) and **BCSI Building Component Safety Information** available from the Structural Building Component Association (www.sbcscomponents.com)

MiTek®
16023 Swingley Ridge Rd.
Chesterfield, MO 63017
314.434.1200 / MiTek-US.com

Job	Truss	Truss Type	Qty	Ply	Mitch Brown
250620-02KM	H13	Half Hip	1	1	Job Reference (optional) T37696834

Coastal Truss & Vinyl Siding, Patterson, GA - 31577,

Run: 8.73 S Feb 19 2025 Print: 8.730 S Feb 19 2025 MiTek Industries, Inc. Fri Jun 20 12:42:44 Page: 1
ID:q06m6fa?FkL0?pxnK03RFDz4Ocv-RfC?PsB70Hq3NSgPqnL8w3uITXbGKWrCDoi7J4zJC?f

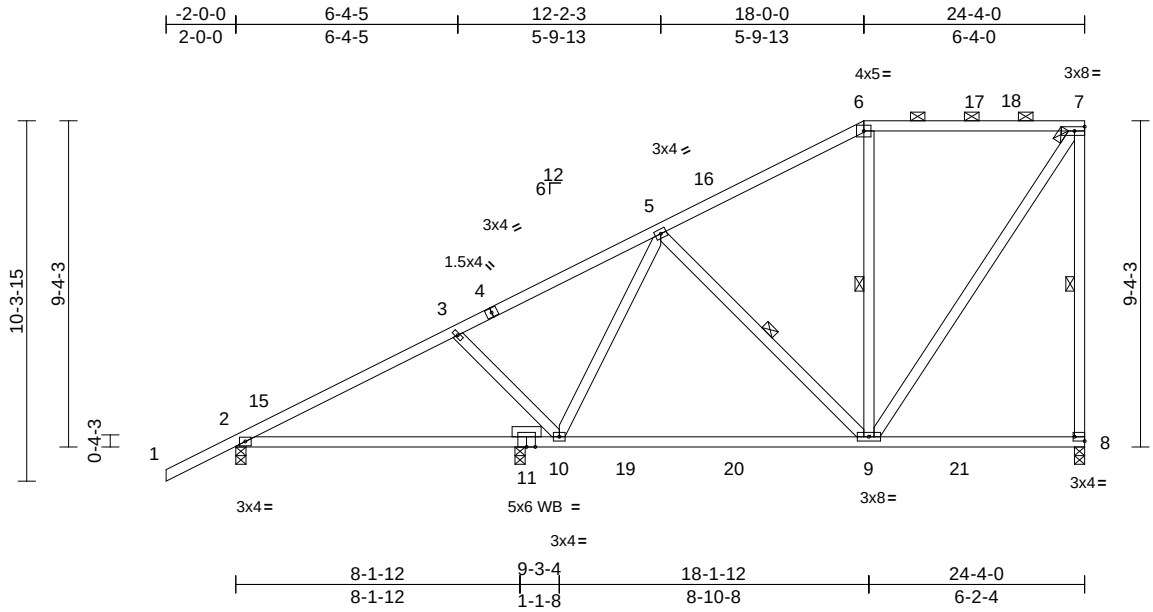

Scale = 1:66

Plate Offsets (X, Y): [8:Edge,0-1-8]

Loading	(psf)	Spacing	2-0-0	CSI		DEFL	in	(loc)	l/defl	L/d	PLATES	GRIP
TCLL (roof)	20.0	Plate Grip DOL	1.25	TC	0.88	Vert(LL)	-0.22	9-10	>862	240	MT20	244/190
TCDL	7.0	Lumber DOL	1.25	BC	0.77	Vert(CT)	-0.34	9-10	>552	180		
BCLL	0.0*	Rep Stress Incr	YES	WB	0.74	Horz(CT)	0.02	8	n/a	n/a		
BCDL	7.0	Code	FBC2023/TPI2014	Matrix-MS							Weight: 150 lb	FT = 20%

LUMBER

TOP CHORD 2x4 SP No.2
BOT CHORD 2x4 SP No.2
WEBS 2x4 SP No.2
OTHERS 2x4 SP No.2

BRACING

TOP CHORD Structural wood sheathing directly applied or 5-3-15 oc purlins, except end verticals, and 2-0-0 oc purlins (6-0-0 max.): 6-7.
BOT CHORD Structural wood sheathing directly applied or 7-2-6 oc bracing.
WEBS 1 Row at midpt 7-8, 5-9, 6-9

REACTIONS (size) 2=0-3-8, 8=0-3-8, 11=0-3-8
Max Horiz 2=439 (LC 11)
Max Uplift 2=-284 (LC 12), 8=-253 (LC 9), 11=-73 (LC 12)
Max Grav 2=813 (LC 17), 8=902 (LC 17), 11=422 (LC 17)

FORCES (lb) - Maximum Compression/Maximum Tension
TOP CHORD 1-2=0/48, 2-3=-1109/386, 3-5=-901/350, 5-6=-581/319, 6-7=-452/325, 7-8=-809/386
BOT CHORD 2-10=-639/1085, 9-10=-502/792, 8-9=-191/209
WEBS 3-10=-327/209, 5-10=0/197, 5-9=-422/234, 6-9=-156/217, 7-9=-361/821

NOTES

1) Unbalanced roof live loads have been considered for this design.
2) Wind: ASCE 7-22; Vult=130mph (3-second gust) Vasd=101mph; TCDL=4.2psf; BCDL=4.2psf; h=18ft; B=50ft; L=30ft; eave=4ft; Cat. II; Exp C; Enclosed; MWFRS (directional) and C-C Zone3 -2-0-0 to 1-0-0, Zone1 1-0-0 to 18-0-0, Zone2 18-0-0 to 22-2-15, Zone1 22-2-15 to 24-2-4 zone; cantilever left and right exposed ; end vertical left and right exposed;C-C for members and forces & MWFRS for reactions shown; Lumber DOL=1.60 plate grip DOL=1.60
3) Building Designer / Project engineer responsible for verifying applied roof live load shown covers rain loading requirements specific to the use of this truss component.
4) Provide adequate drainage to prevent water ponding.
5) This truss has been designed for a 10.0 psf bottom chord live load nonconcurrent with any other live loads.
6) * This truss has been designed for a live load of 20.0psf on the bottom chord in all areas where a rectangle 3-06-00 tall by 2-00-00 wide will fit between the bottom chord and any other members, with BCDL = 7.0psf.
7) All bearings are assumed to be SP No.2 .
8) Provide mechanical connection (by others) of truss to bearing plate capable of withstanding 253 lb uplift at joint 8, 284 lb uplift at joint 2 and 73 lb uplift at joint 11.
9) Graphical purlin representation does not depict the size or the orientation of the purlin along the top and/or bottom chord.

LOAD CASE(S) Standard

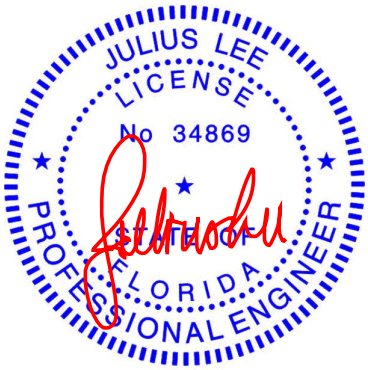

Julius Lee PE No. 34869
MiTek Inc. DBA MiTek USA FL Cert 6634
16023 Swingley Ridge Rd. Chesterfield, MO 63017
Date:

June 23,2025

WARNING - Verify design parameters and READ NOTES ON THIS AND INCLUDED MITEK REFERENCE PAGE MII-7473 rev. 1/2/2023 BEFORE USE.
Design valid for use only with MiTek® connectors. This design is based only upon parameters shown, and is for an individual building component, not a truss system. Before use, the building designer must verify the applicability of design parameters and properly incorporate this design into the overall building design. Bracing indicated is to prevent buckling of individual truss web and/or chord members only. Additional temporary and permanent bracing is always required for stability and to prevent collapse with possible personal injury and property damage. For general guidance regarding the fabrication, storage, delivery, erection and bracing of trusses and truss systems, see **ANSI/TPI1 Quality Criteria and DSB-22** available from Truss Plate Institute (www.tpinst.org) and **BCSI Building Component Safety Information** available from the Structural Building Component Association (www.sbcscomponents.com)

MiTek®
16023 Swingley Ridge Rd.
Chesterfield, MO 63017
314.434.1200 / MiTek-US.com

Job	Truss	Truss Type	Qty	Ply	Mitch Brown
250620-02KM	H14	Half Hip	1	1	Job Reference (optional) T37696835

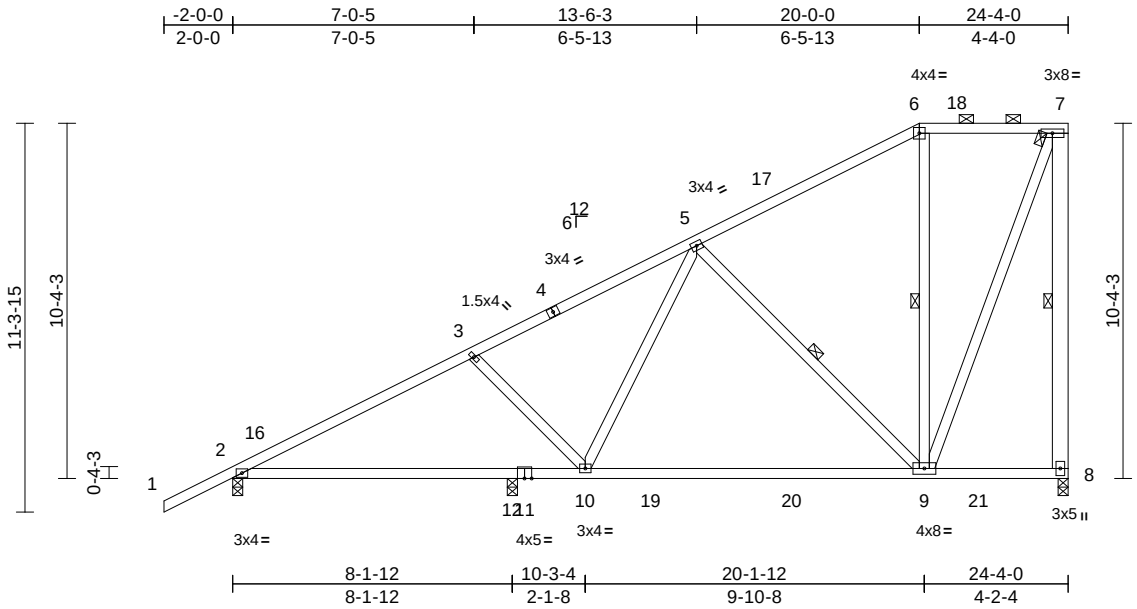

Scale = 1:67.1

Loading	(psf)	Spacing	2-0-0	CSI		DEFL	in	(loc)	l/defl	L/d	PLATES	GRIP
TCLL (roof)	20.0	Plate Grip DOL	1.25	TC	0.49	Vert(LL)	-0.34	9-10	>568	240	MT20	244/190
TCDL	7.0	Lumber DOL	1.25	BC	0.82	Vert(CT)	-0.51	9-10	>376	180		
BCLL	0.0*	Rep Stress Incr	YES	WB	0.82	Horz(CT)	0.03	8	n/a	n/a		
BCDL	7.0	Code	FBC2023/TPI2014	Matrix-MS							Weight: 164 lb	FT = 20%

LUMBER
TOP CHORD 2x4 SP No.2
BOT CHORD 2x4 SP No.2
WEBS 2x4 SP No.2 *Except* 7-8:2x6 SP No.2

BRACING
TOP CHORD Structural wood sheathing directly applied or 4-7-2 oc purlins, except end verticals, and 2-0-0 oc purlins (6-0-0 max.): 6-7.
BOT CHORD Structural wood sheathing directly applied or 6-0-0 oc bracing.
WEBS 1 Row at midpt 7-8, 5-9, 6-9

REACTIONS (size) 2=0-3-8, 8=0-3-8, 12=0-3-8
Max Horiz 2=486 (LC 11)
Max Uplift 2=-325 (LC 12), 8=-266 (LC 9), 12=-5 (LC 12)
Max Grav 2=958 (LC 17), 8=999 (LC 17), 12=190 (LC 17)

FORCES (lb) - Maximum Compression/Maximum Tension
TOP CHORD 1-2=0/48, 2-3=-1389/477, 3-5=-1155/435, 5-6=-515/302, 6-7=-383/314, 7-8=-980/421
BOT CHORD 2-12=-725/1346, 10-12=-725/1346, 9-10=-526/878, 8-9=-212/230
WEBS 3-10=-364/236, 5-10=-82/503, 5-9=-689/327, 6-9=-176/237, 7-9=-405/975

NOTES
1) Unbalanced roof live loads have been considered for this design.
2) Wind: ASCE 7-22; Vult=130mph (3-second gust) Vasd=101mph; TCDL=4.2psf; BCDL=4.2psf; h=18ft; B=50ft; L=30ft; eave=4ft; Cat. II; Exp C; Enclosed; MWFRS (directional) and C-C Zone3 -2-0-0 to 1-0-0, Zone1 1-0-0 to 20-0-0, Zone3 20-0-0 to 24-1-4 zone; cantilever left and right exposed ; end vertical left and right exposed;C-C for members and forces & MWFRS for reactions shown; Lumber DOL=1.60 plate grip DOL=1.60
3) Building Designer / Project engineer responsible for verifying applied roof live load shown covers rain loading requirements specific to the use of this truss component.
4) Provide adequate drainage to prevent water ponding.
5) This truss has been designed for a 10.0 psf bottom chord live load nonconcurrent with any other live loads.
6) * This truss has been designed for a live load of 20.0psf on the bottom chord in all areas where a rectangle 3-06-00 tall by 2-00-00 wide will fit between the bottom chord and any other members, with BCDL = 7.0psf.
7) All bearings are assumed to be SP No.2 .
8) Provide mechanical connection (by others) of truss to bearing plate capable of withstanding 266 lb uplift at joint 8, 325 lb uplift at joint 2 and 5 lb uplift at joint 12.
9) Graphical purlin representation does not depict the size or the orientation of the purlin along the top and/or bottom chord.

LOAD CASE(S) Standard

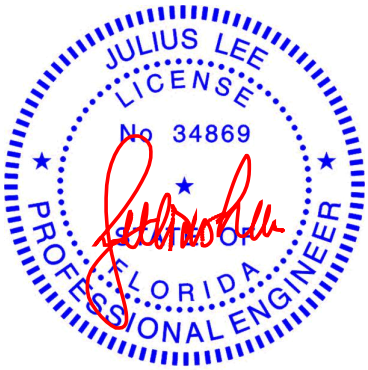

Julius Lee PE No. 34869
MiTek Inc. DBA MiTek USA FL Cert 6634
16023 Swingley Ridge Rd. Chesterfield, MO 63017
Date:

June 23,2025

WARNING - Verify design parameters and READ NOTES ON THIS AND INCLUDED MITEK REFERENCE PAGE MII-7473 rev. 1/2/2023 BEFORE USE.
Design valid for use only with MiTek® connectors. This design is based only upon parameters shown, and is for an individual building component, not a truss system. Before use, the building designer must verify the applicability of design parameters and properly incorporate this design into the overall building design. Bracing indicated is to prevent buckling of individual truss web and/or chord members only. Additional temporary and permanent bracing is always required for stability and to prevent collapse with possible personal injury and property damage. For general guidance regarding the fabrication, storage, delivery, erection and bracing of trusses and truss systems, see **ANSI/TPI1 Quality Criteria and DSB-22** available from Truss Plate Institute (www.tpinst.org) and **BCSI Building Component Safety Information** available from the Structural Building Component Association (www.sbcscomponents.com)

MiTek®
16023 Swingley Ridge Rd.
Chesterfield, MO 63017
314.434.1200 / MiTek-US.com

Job	Truss	Truss Type	Qty	Ply	Mitch Brown
250620-02KM	CJ02	Diagonal Hip Girder	1	1	Job Reference (optional) T37696836

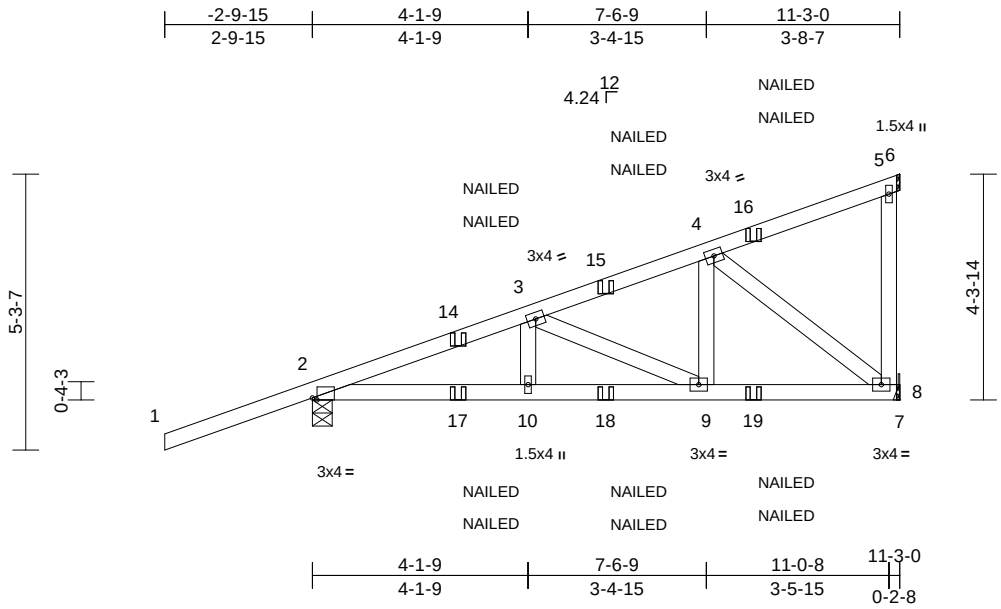

Scale = 1:44.1

Plate Offsets (X, Y): [2:0-1-1,Edge]

Loading	(psf)	Spacing	2-0-0	CSI		DEFL	in	(loc)	l/defl	L/d	PLATES	GRIP
TCLL (roof)	20.0	Plate Grip DOL	1.25	TC	0.56	Vert(LL)	-0.04	10-13	>999	240	MT20	244/190
TCDL	7.0	Lumber DOL	1.25	BC	0.28	Vert(CT)	-0.04	10-13	>999	180		
BCLL	0.0*	Rep Stress Incr	NO	WB	0.21	Horz(CT)	0.01	8	n/a	n/a		
BCDL	7.0	Code	FBC2023/TPI2014	Matrix-MS							Weight: 61 lb	FT = 20%

LUMBER
TOP CHORD 2x4 SP No.2
BOT CHORD 2x4 SP No.2
WEBS 2x4 SP No.2

BRACING
TOP CHORD Structural wood sheathing directly applied or 5-8-12 oc purlins, except end verticals.
BOT CHORD Structural wood sheathing directly applied or 10-0-0 oc bracing.

REACTIONS (size) 2=0-4-9, 8= Mechanical
Max Horiz 2=203 (LC 7)
Max Uplift 2=-275 (LC 8), 8=-165 (LC 5)
Max Grav 2=602 (LC 13), 8=551 (LC 13)

FORCES (lb) - Maximum Compression/Maximum Tension
TOP CHORD 1-2=0/51, 2-3=-1023/132, 3-4=-668/172, 4-5=-148/89, 5-6=-1/0, 5-8=-103/63
BOT CHORD 2-10=-242/873, 9-10=-242/873, 8-9=-191/559, 7-8=0/0
WEBS 3-10=0/136, 3-9=-355/56, 4-9=0/312, 4-8=-662/190

NOTES
1) Wind: ASCE 7-22; Vult=130mph (3-second gust) Vasd=101mph; TCDL=4.2psf; BCDL=4.2psf; h=18ft; B=50ft; L=30ft; eave=4ft; Cat. II; Exp C; Enclosed; MWFRS (directional); cantilever left and right exposed ; end vertical left and right exposed; Lumber DOL=1.60 plate grip DOL=1.60
2) Building Designer / Project engineer responsible for verifying applied roof live load shown covers rain loading requirements specific to the use of this truss component.
3) This truss has been designed for a 10.0 psf bottom chord live load nonconcurrent with any other live loads.
4) * This truss has been designed for a live load of 20.0psf on the bottom chord in all areas where a rectangle 3-06-00 tall by 2-00-00 wide will fit between the bottom chord and any other members.
5) Bearings are assumed to be: Joint 2 SP No.2 .
6) Refer to girder(s) for truss to truss connections.
7) Provide mechanical connection (by others) of truss to bearing plate capable of withstanding 275 lb uplift at joint 2 and 165 lb uplift at joint 8.
8) "NAILED" indicates 3-10d (0.148"x3") or 2-12d (0.148"x3.25") toe-nails per NDS guidlines.
9) In the LOAD CASE(S) section, loads applied to the face of the truss are noted as front (F) or back (B).

LOAD CASE(S) Standard
1) Dead + Roof Live (balanced): Lumber Increase=1.25, Plate Increase=1.25
Uniform Loads (lb/ft)
Vert: 1-5=-54, 5-6=-14, 7-11=-14
Concentrated Loads (lb)
Vert: 15=-8 (F=-4, B=-4), 16=-112 (F=-56, B=-56), 18=-17 (F=-8, B=-8), 19=-66 (F=-33, B=-33)

Julius Lee PE No. 34869
MiTek Inc. DBA MiTek USA FL Cert 6634
16023 Swingley Ridge Rd. Chesterfield, MO 63017
Date:

June 23,2025

WARNING - Verify design parameters and READ NOTES ON THIS AND INCLUDED MITEK REFERENCE PAGE MII-7473 rev. 1/2/2023 BEFORE USE.
Design valid for use only with MiTek® connectors. This design is based only upon parameters shown, and is for an individual building component, not a truss system. Before use, the building designer must verify the applicability of design parameters and properly incorporate this design into the overall building design. Bracing indicated is to prevent buckling of individual truss web and/or chord members only. Additional temporary and permanent bracing is always required for stability and to prevent collapse with possible personal injury and property damage. For general guidance regarding the fabrication, storage, delivery, erection and bracing of trusses and truss systems, see **ANSI/TPI1 Quality Criteria and DSB-22** available from Truss Plate Institute (www.tpinst.org) and **BCSI Building Component Safety Information** available from the Structural Building Component Association (www.sbcscomponents.com)

MiTek®
16023 Swingley Ridge Rd.
Chesterfield, MO 63017
314.434.1200 / MiTek-US.com

Job	Truss	Truss Type	Qty	Ply	Mitch Brown
250620-02KM	J06	Jack-Open	2	1	Job Reference (optional) T37696837

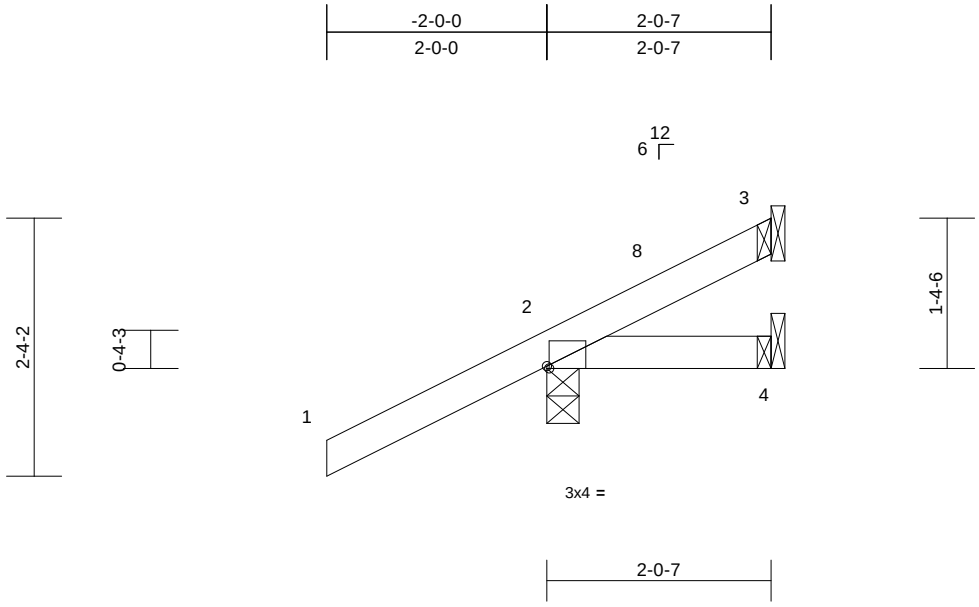

Scale = 1:20.9

Plate Offsets (X, Y): [2:0-0-4,Edge]

Loading	(psf)	Spacing	2-0-0	CSI		DEFL	in	(loc)	l/defl	L/d	PLATES	GRIP
TCLL (roof)	20.0	Plate Grip DOL	1.25	TC	0.45	Vert(LL)	0.00	4-7	>999	240	MT20	244/190
TCDL	7.0	Lumber DOL	1.25	BC	0.12	Vert(CT)	0.00	4-7	>999	180		
BCLL	0.0*	Rep Stress Incr	YES	WB	0.00	Horz(CT)	0.00	2	n/a	n/a		
BCDL	7.0	Code	FBC2023/TPI2014	Matrix-MP							Weight: 10 lb	FT = 20%

LUMBER
TOP CHORD 2x4 SP No.2
BOT CHORD 2x4 SP No.2

BRACING
TOP CHORD Structural wood sheathing directly applied or 2-0-7 oc purlins.
BOT CHORD Structural wood sheathing directly applied or 10-0-0 oc bracing.

REACTIONS (size) 2=0-3-8, 3= Mechanical, 4= Mechanical
Max Horiz 2=93 (LC 12)
Max Uplift 2=-168 (LC 12), 3=-10 (LC 9), 4=-6 (LC 1)
Max Grav 2=230 (LC 1), 3=22 (LC 17), 4=31 (LC 12)

FORCES (lb) - Maximum Compression/Maximum Tension
TOP CHORD 1-2=0/48, 2-3=-269/89
BOT CHORD 2-4=-100/269

NOTES
1) Wind: ASCE 7-22; Vult=130mph (3-second gust) Vasd=101mph; TCDL=4.2psf; BCDL=4.2psf; h=18ft; B=50ft; L=30ft; eave=4ft; Cat. II; Exp C; Enclosed; MWFRS (directional) and C-C Zone3 -2-0-0 to 1-0-0, Zone1 1-0-0 to 1-11-11 zone; cantilever left and right exposed ; end vertical left and right exposed;C-C for members and forces & MWFRS for reactions shown; Lumber DOL=1.60 plate grip DOL=1.60
2) Building Designer / Project engineer responsible for verifying applied roof live load shown covers rain loading requirements specific to the use of this truss component.
3) This truss has been designed for a 10.0 psf bottom chord live load nonconcurrent with any other live loads.
4) * This truss has been designed for a live load of 20.0psf on the bottom chord in all areas where a rectangle 3-06-00 tall by 2-00-00 wide will fit between the bottom chord and any other members.
5) Bearings are assumed to be: , Joint 2 SP No.2 .
6) Refer to girder(s) for truss to truss connections.
7) Provide mechanical connection (by others) of truss to bearing plate capable of withstanding 10 lb uplift at joint 3, 168 lb uplift at joint 2 and 6 lb uplift at joint 4.

LOAD CASE(S) Standard

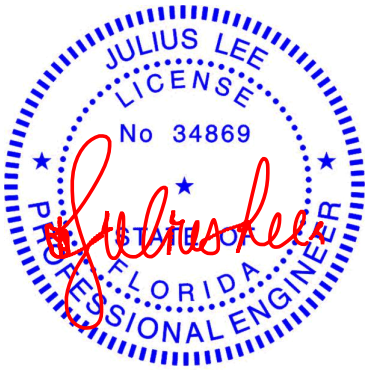

Julius Lee PE No. 34869
MiTek Inc. DBA MiTek USA FL Cert 6634
16023 Swingley Ridge Rd. Chesterfield, MO 63017
Date:

June 23,2025

WARNING - Verify design parameters and READ NOTES ON THIS AND INCLUDED MITEK REFERENCE PAGE MII-7473 rev. 1/2/2023 BEFORE USE.
Design valid for use only with MiTek® connectors. This design is based only upon parameters shown, and is for an individual building component, not a truss system. Before use, the building designer must verify the applicability of design parameters and properly incorporate this design into the overall building design. Bracing indicated is to prevent buckling of individual truss web and/or chord members only. Additional temporary and permanent bracing is always required for stability and to prevent collapse with possible personal injury and property damage. For general guidance regarding the fabrication, storage, delivery, erection and bracing of trusses and truss systems, see **ANSI/TPI1 Quality Criteria and DSB-22** available from Truss Plate Institute (www.tpinst.org) and **BCSI Building Component Safety Information** available from the Structural Building Component Association (www.sbcscomponents.com)

MiTek®
16023 Swingley Ridge Rd.
Chesterfield, MO 63017
314.434.1200 / MiTek-US.com

Job	Truss	Truss Type	Qty	Ply	Mitch Brown
250620-02KM	J07	Jack-Open	2	1	Job Reference (optional) T37696838

Coastal Truss & Vinyl Siding, Patterson, GA - 31577,

Run: 8.73 S Feb 19 2025 Print: 8.730 S Feb 19 2025 MiTek Industries, Inc. Fri Jun 20 12:42:45 Page: 1
ID:ICf9K?ad02TtdzWztkagnRz4Ocu-RfC?PsB70Hq3NSgPqnL8w3uITXbGKWrCDoi7J4zJC?f

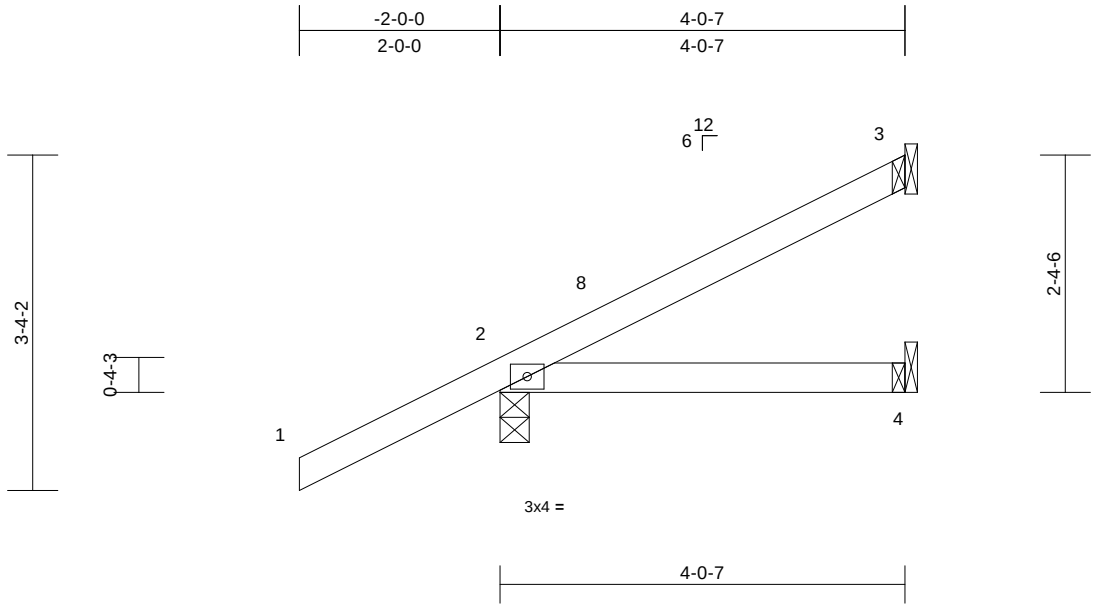

Scale = 1:23

Loading	(psf)	Spacing	2-0-0	CSI		DEFL	in	(loc)	l/defl	L/d	PLATES	GRIP
TCLL (roof)	20.0	Plate Grip DOL	1.25	TC	0.45	Vert(LL)	0.01	4-7	>999	240	MT20	244/190
TCDL	7.0	Lumber DOL	1.25	BC	0.12	Vert(CT)	-0.02	4-7	>999	180		
BCLL	0.0*	Rep Stress Incr	YES	WB	0.00	Horz(CT)	0.00	3	n/a	n/a		
BCDL	7.0	Code	FBC2023/TPI2014	Matrix-MP							Weight: 16 lb	FT = 20%

LUMBER
TOP CHORD 2x4 SP No.2
BOT CHORD 2x4 SP No.2

BRACING
TOP CHORD Structural wood sheathing directly applied or 4-0-7 oc purlins.
BOT CHORD Structural wood sheathing directly applied or 10-0-0 oc bracing.

REACTIONS (size) 2=0-3-8, 3= Mechanical, 4= Mechanical
Max Horiz 2=130 (LC 12)
Max Uplift 2=-147 (LC 12), 3=-45 (LC 12)
Max Grav 2=270 (LC 1), 3=84 (LC 17), 4=58 (LC 3)

FORCES (lb) - Maximum Compression/Maximum Tension
TOP CHORD 1-2=0/48, 2-3=-314/86
BOT CHORD 2-4=-82/258

NOTES
1) Wind: ASCE 7-22; Vult=130mph (3-second gust) Vasd=101mph; TCDL=4.2psf; BCDL=4.2psf; h=18ft; B=50ft; L=30ft; eave=4ft; Cat. II; Exp C; Enclosed; MWFRS (directional) and C-C Zone3 -2-0-0 to 1-0-0, Zone1 1-0-0 to 3-11-11 zone; cantilever left and right exposed ; end vertical left and right exposed;C-C for members and forces & MWFRS for reactions shown; Lumber DOL=1.60 plate grip DOL=1.60
2) Building Designer / Project engineer responsible for verifying applied roof live load shown covers rain loading requirements specific to the use of this truss component.
3) This truss has been designed for a 10.0 psf bottom chord live load nonconcurrent with any other live loads.
4) * This truss has been designed for a live load of 20.0psf on the bottom chord in all areas where a rectangle 3-06-00 tall by 2-00-00 wide will fit between the bottom chord and any other members.
5) Bearings are assumed to be: , Joint 2 SP No.2 .
6) Refer to girder(s) for truss to truss connections.
7) Provide mechanical connection (by others) of truss to bearing plate capable of withstanding 45 lb uplift at joint 3 and 147 lb uplift at joint 2.

LOAD CASE(S) Standard

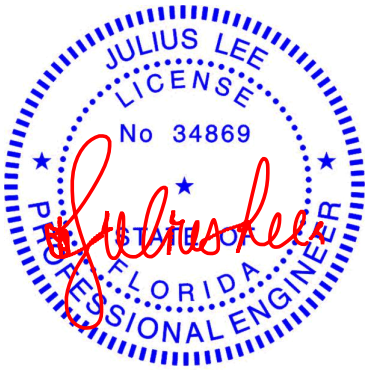

Julius Lee PE No. 34869
MiTek Inc. DBA MiTek USA FL Cert 6634
16023 Swingley Ridge Rd. Chesterfield, MO 63017
Date:

June 23,2025

WARNING - Verify design parameters and READ NOTES ON THIS AND INCLUDED MITEK REFERENCE PAGE MII-7473 rev. 1/2/2023 BEFORE USE.
Design valid for use only with MiTek® connectors. This design is based only upon parameters shown, and is for an individual building component, not a truss system. Before use, the building designer must verify the applicability of design parameters and properly incorporate this design into the overall building design. Bracing indicated is to prevent buckling of individual truss web and/or chord members only. Additional temporary and permanent bracing is always required for stability and to prevent collapse with possible personal injury and property damage. For general guidance regarding the fabrication, storage, delivery, erection and bracing of trusses and truss systems, see **ANSI/TPI1 Quality Criteria and DSB-22** available from Truss Plate Institute (www.tpinst.org) and **BCSI Building Component Safety Information** available from the Structural Building Component Association (www.sbcscomponents.com)

MiTek®
16023 Swingley Ridge Rd.
Chesterfield, MO 63017
314.434.1200 / MiTek-US.com

Job	Truss	Truss Type	Qty	Ply	Mitch Brown
250620-02KM	J08	Jack-Open	2	1	Job Reference (optional) T37696839

Coastal Truss & Vinyl Siding, Patterson, GA - 31577,

Run: 8.73 S Feb 19 2025 Print: 8.730 S Feb 19 2025 MiTek Industries, Inc. Fri Jun 20 12:42:45 Page: 1
ID:ICf9K?ad02TtdzWztkagnRz4Ocu-RfC?PsB70Hq3NSgPqnL8w3uITXbGKWrCDoi7J4zJC?f

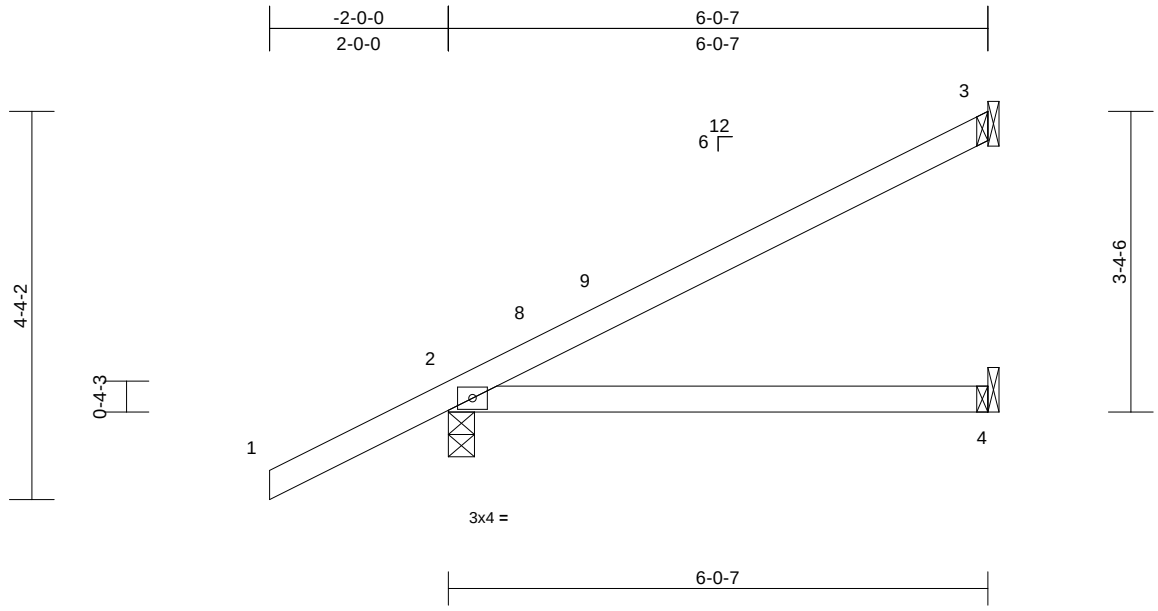

Scale = 1:25.8

Loading	(psf)	Spacing	2-0-0	CSI		DEFL	in	(loc)	l/defl	L/d	PLATES	GRIP
TCLL (roof)	20.0	Plate Grip DOL	1.25	TC	0.53	Vert(LL)	0.08	4-7	>926	240	MT20	244/190
TCDL	7.0	Lumber DOL	1.25	BC	0.36	Vert(CT)	-0.10	4-7	>730	180		
BCLL	0.0*	Rep Stress Incr	YES	WB	0.00	Horz(CT)	0.00	3	n/a	n/a		
BCDL	7.0	Code	FBC2023/TPI2014	Matrix-MP							Weight: 23 lb	FT = 20%

LUMBER
TOP CHORD 2x4 SP No.2
BOT CHORD 2x4 SP No.2

BRACING
TOP CHORD Structural wood sheathing directly applied or 6-0-0 oc purlins.
BOT CHORD Structural wood sheathing directly applied or 10-0-0 oc bracing.

REACTIONS (size) 2=0-3-8, 3= Mechanical, 4= Mechanical
Max Horiz 2=166 (LC 12)
Max Uplift 2=-148 (LC 12), 3=-81 (LC 12)
Max Grav 2=329 (LC 1), 3=138 (LC 17), 4=91 (LC 3)

FORCES (lb) - Maximum Compression/Maximum Tension
TOP CHORD 1-2=0/48, 2-3=-342/85
BOT CHORD 2-4=-56/219

NOTES
1) Wind: ASCE 7-22; Vult=130mph (3-second gust) Vasd=101mph; TCDL=4.2psf; BCDL=4.2psf; h=18ft; B=50ft; L=30ft; eave=4ft; Cat. II; Exp C; Enclosed; MWFRS (directional) and C-C Zone3 -2-0-0 to 1-0-0, Zone1 1-0-0 to 5-11-11 zone; cantilever left and right exposed ; end vertical left and right exposed;C-C for members and forces & MWFRS for reactions shown; Lumber DOL=1.60 plate grip DOL=1.60
2) Building Designer / Project engineer responsible for verifying applied roof live load shown covers rain loading requirements specific to the use of this truss component.
3) This truss has been designed for a 10.0 psf bottom chord live load nonconcurrent with any other live loads.
4) * This truss has been designed for a live load of 20.0psf on the bottom chord in all areas where a rectangle 3-06-00 tall by 2-00-00 wide will fit between the bottom chord and any other members.
5) Bearings are assumed to be: , Joint 2 SP No.2 .
6) Refer to girder(s) for truss to truss connections.
7) Provide mechanical connection (by others) of truss to bearing plate capable of withstanding 81 lb uplift at joint 3 and 148 lb uplift at joint 2.

LOAD CASE(S) Standard

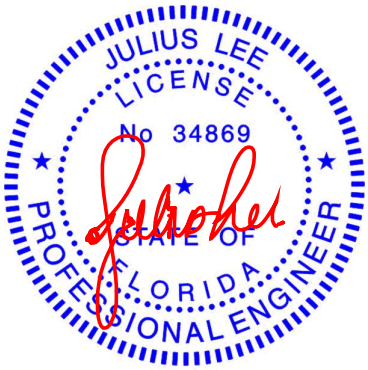

Julius Lee PE No. 34869
MiTek Inc. DBA MiTek USA FL Cert 6634
16023 Swingley Ridge Rd. Chesterfield, MO 63017
Date:

June 23,2025

WARNING - Verify design parameters and READ NOTES ON THIS AND INCLUDED MITEK REFERENCE PAGE MII-7473 rev. 1/2/2023 BEFORE USE.
Design valid for use only with MiTek® connectors. This design is based only upon parameters shown, and is for an individual building component, not a truss system. Before use, the building designer must verify the applicability of design parameters and properly incorporate this design into the overall building design. Bracing indicated is to prevent buckling of individual truss web and/or chord members only. Additional temporary and permanent bracing is always required for stability and to prevent collapse with possible personal injury and property damage. For general guidance regarding the fabrication, storage, delivery, erection and bracing of trusses and truss systems, see **ANSI/TPI1 Quality Criteria and DSB-22** available from Truss Plate Institute (www.tpinst.org) and **BCSI Building Component Safety Information** available from the Structural Building Component Association (www.sbcscomponents.com)

MiTek®
16023 Swingley Ridge Rd.
Chesterfield, MO 63017
314.434.1200 / MiTek-US.com

Job	Truss	Truss Type	Qty	Ply	Mitch Brown
250620-02KM	J09	Jack-Open	8	1	T37696840 Job Reference (optional)

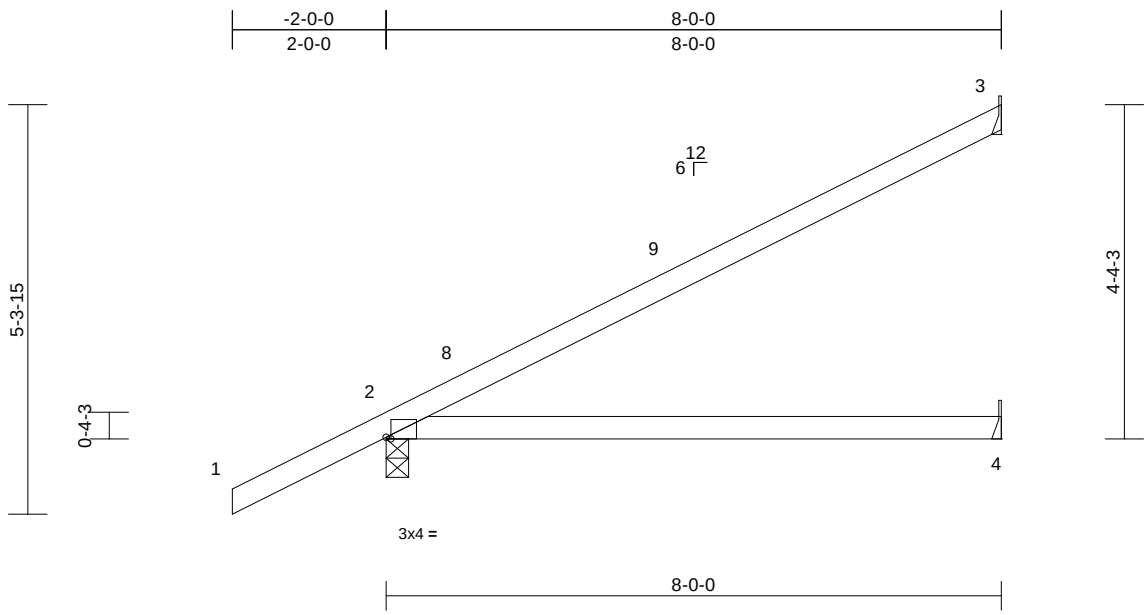

Scale = 1:30

Plate Offsets (X, Y): [2:0-0-12,Edge]

Loading	(psf)	Spacing	2-0-0	CSI		DEFL	in	(loc)	l/defl	L/d	PLATES	GRIP
TCLL (roof)	20.0	Plate Grip DOL	1.25	TC	0.93	Vert(LL)	0.21	4-7	>449	240	MT20	244/190
TCDL	7.0	Lumber DOL	1.25	BC	0.59	Vert(CT)	-0.32	4-7	>298	180		
BCLL	0.0*	Rep Stress Incr	YES	WB	0.00	Horz(CT)	-0.01	3	n/a	n/a		
BCDL	7.0	Code	FBC2023/TPI2014	Matrix-MP							Weight: 29 lb	FT = 20%

LUMBER
TOP CHORD 2x4 SP No.2
BOT CHORD 2x4 SP No.2

BRACING
TOP CHORD Structural wood sheathing directly applied.
BOT CHORD Structural wood sheathing directly applied or 10-0-0 oc bracing.

REACTIONS (size) 2=0-3-8, 3= Mechanical, 4= Mechanical
Max Horiz 2=203 (LC 12)
Max Uplift 2=-154 (LC 12), 3=-115 (LC 12)
Max Grav 2=391 (LC 1), 3=189 (LC 17), 4=123 (LC 3)

FORCES (lb) - Maximum Compression/Maximum Tension
TOP CHORD 1-2=0/48, 2-3=-351/78
BOT CHORD 2-4=-27/166

NOTES
1) Wind: ASCE 7-22; Vult=130mph (3-second gust) Vasd=101mph; TCDL=4.2psf; BCDL=4.2psf; h=18ft; B=50ft; L=30ft; eave=4ft; Cat. II; Exp C; Enclosed; MWFRS (directional) and C-C Zone3 -2-0-0 to 1-0-0, Zone1 1-0-0 to 7-11-4 zone; cantilever left and right exposed ; end vertical left and right exposed;C-C for members and forces & MWFRS for reactions shown; Lumber DOL=1.60 plate grip DOL=1.60
2) Building Designer / Project engineer responsible for verifying applied roof live load shown covers rain loading requirements specific to the use of this truss component.
3) This truss has been designed for a 10.0 psf bottom chord live load nonconcurrent with any other live loads.
4) * This truss has been designed for a live load of 20.0psf on the bottom chord in all areas where a rectangle 3-06-00 tall by 2-00-00 wide will fit between the bottom chord and any other members.
5) Bearings are assumed to be: , Joint 2 SP No.2 .
6) Refer to girder(s) for truss to truss connections.
7) Provide mechanical connection (by others) of truss to bearing plate capable of withstanding 115 lb uplift at joint 3 and 154 lb uplift at joint 2.

LOAD CASE(S) Standard

Julius Lee PE No. 34869
MiTek Inc. DBA MiTek USA FL Cert 6634
16023 Swingley Ridge Rd. Chesterfield, MO 63017
Date:

June 23,2025

WARNING - Verify design parameters and READ NOTES ON THIS AND INCLUDED MITEK REFERENCE PAGE MII-7473 rev. 1/2/2023 BEFORE USE.
Design valid for use only with MiTek® connectors. This design is based only upon parameters shown, and is for an individual building component, not a truss system. Before use, the building designer must verify the applicability of design parameters and properly incorporate this design into the overall building design. Bracing indicated is to prevent buckling of individual truss web and/or chord members only. Additional temporary and permanent bracing is always required for stability and to prevent collapse with possible personal injury and property damage. For general guidance regarding the fabrication, storage, delivery, erection and bracing of trusses and truss systems, see **ANSI/TPI1 Quality Criteria and DSB-22** available from Truss Plate Institute (www.tpinst.org) and **BCSI Building Component Safety Information** available from the Structural Building Component Association (www.sbcscomponents.com)

MiTek®
16023 Swingley Ridge Rd.
Chesterfield, MO 63017
314.434.1200 / MiTek-US.com

Job	Truss	Truss Type	Qty	Ply	Mitch Brown
250620-02KM	J10	Jack-Open	1	1	T37696841 Job Reference (optional)

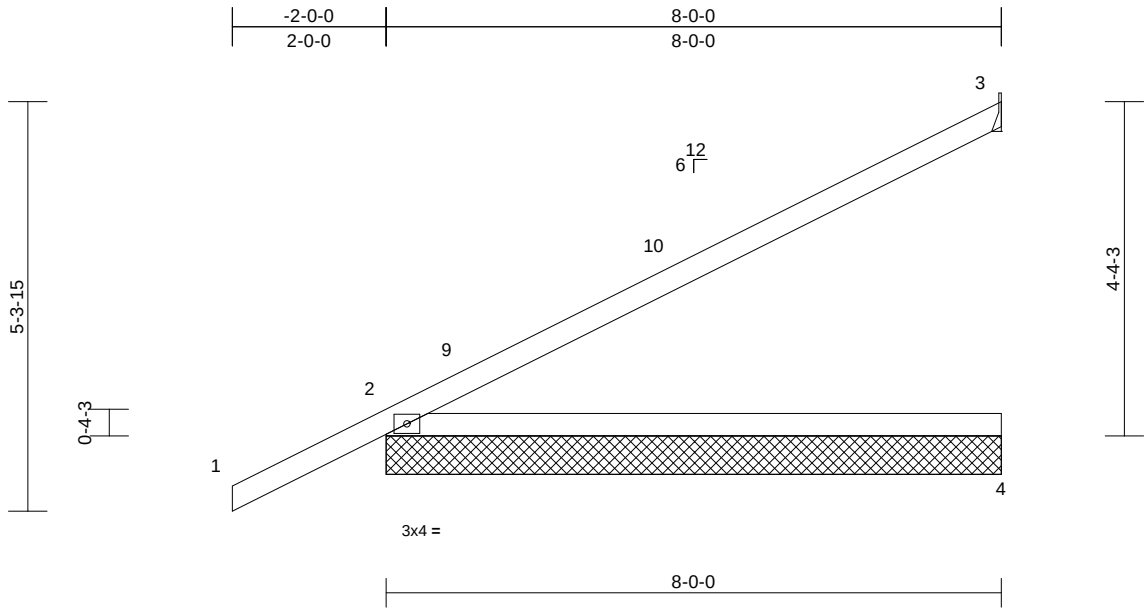

Scale = 1:30

Loading	(psf)	Spacing	2-0-0	CSI		DEFL	in	(loc)	l/defl	L/d	PLATES	GRIP
TCLL (roof)	20.0	Plate Grip DOL	1.25	TC	0.94	Vert(LL)	0.22	7-8	>443	240	MT20	244/190
TCDL	7.0	Lumber DOL	1.25	BC	0.59	Vert(CT)	-0.33	7-8	>289	180		
BCLL	0.0*	Rep Stress Incr	YES	WB	0.00	Horz(CT)	-0.01	3	n/a	n/a		
BCDL	7.0	Code	FBC2023/TPI2014	Matrix-MP							Weight: 29 lb	FT = 20%

LUMBER
TOP CHORD 2x4 SP No.2
BOT CHORD 2x4 SP No.2

BRACING
TOP CHORD Structural wood sheathing directly applied.
BOT CHORD Structural wood sheathing directly applied or 10-0-0 oc bracing.

REACTIONS All bearings 8-0-0. except 3= Mechanical
(lb) - Max Horiz 2=203 (LC 12), 5=203 (LC 12)
Max Uplift All uplift 100 (lb) or less at joint(s) except 2=-154 (LC 12), 3=-115 (LC 12), 5=-154 (LC 12)
Max Grav All reactions 250 (lb) or less at joint (s) 3, 4 except 2=393 (LC 1), 5=393 (LC 1)

FORCES (lb) - Max. Comp./Max. Ten. - All forces 250 (lb) or less except when shown.
TOP CHORD 2-9=-351/77

NOTES
1) Wind: ASCE 7-22; Vult=130mph (3-second gust) Vasd=101mph; TCDL=4.2psf; BCDL=4.2psf; h=18ft; B=50ft; L=30ft; eave=4ft; Cat. II; Exp C; Enclosed; MWFRS (directional) and C-C 1-0-0 to 7-11-4 zone; cantilever left and right exposed ; end vertical left and right exposed;C-C for members and forces & MWFRS for reactions shown; Lumber DOL=1.60 plate grip DOL=1.60
2) Building Designer / Project engineer responsible for verifying applied roof live load shown covers rain loading requirements specific to the use of this truss component.
3) This truss has been designed for a 10.0 psf bottom chord live load nonconcurrent with any other live loads.
4) * This truss has been designed for a live load of 20.0psf on the bottom chord in all areas where a rectangle 3-06-00 tall by 2-00-00 wide will fit between the bottom chord and any other members.
5) Refer to girder(s) for truss to truss connections.
6) Provide mechanical connection (by others) of truss to bearing plate capable of withstanding 153 lb uplift at joint 2, 114 lb uplift at joint 3 and 153 lb uplift at joint 2.

LOAD CASE(S) Standard

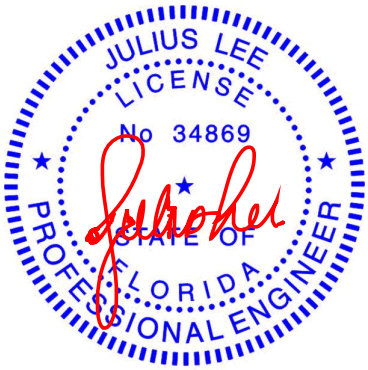

Julius Lee PE No. 34869
MiTek Inc. DBA MiTek USA FL Cert 6634
16023 Swingley Ridge Rd. Chesterfield, MO 63017
Date:

June 23,2025

WARNING - Verify design parameters and READ NOTES ON THIS AND INCLUDED MITEK REFERENCE PAGE MII-7473 rev. 1/2/2023 BEFORE USE.
Design valid for use only with MiTek® connectors. This design is based only upon parameters shown, and is for an individual building component, not a truss system. Before use, the building designer must verify the applicability of design parameters and properly incorporate this design into the overall building design. Bracing indicated is to prevent buckling of individual truss web and/or chord members only. Additional temporary and permanent bracing is always required for stability and to prevent collapse with possible personal injury and property damage. For general guidance regarding the fabrication, storage, delivery, erection and bracing of trusses and truss systems, see **ANSI/TPI1 Quality Criteria and DSB-22** available from Truss Plate Institute (www.tpinst.org) and **BCSI Building Component Safety Information** available from the Structural Building Component Association (www.sbcscomponents.com)

MiTek®
16023 Swingley Ridge Rd.
Chesterfield, MO 63017
314.434.1200 / MiTek-US.com

Symbols

PLATE LOCATION AND ORIENTATION

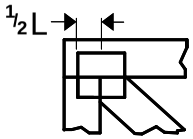

Center plate on joint unless x, y offsets are indicated. Dimensions are in ft-in-sixteenths. Apply plates to both sides of truss and fully embed teeth.

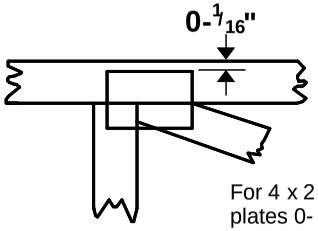

For 4 x 2 orientation, locate plates 0- 1/16" from outside edge of truss.

This symbol indicates the required direction of slots in connector plates.

* Plate location details available in MiTek software or upon request.

PLATE SIZE

4 x 4

The first dimension is the plate width measured perpendicular to slots. Second dimension is the length parallel to slots.

LATERAL BRACING LOCATION

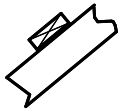

Indicated by symbol shown and/or by text in the bracing section of the output. Use T or I bracing if indicated.

BEARING

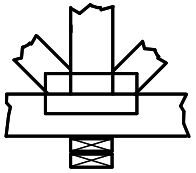

Indicates location where bearings (supports) occur. Icons vary but reaction section indicates joint number/letter where bearings occur. Min size shown is for crushing only.

Industry Standards:

ANSI/TPI1: National Design Specification for Metal Plate Connected Wood Truss Construction.
DSB-22: Design Standard for Bracing.
BCSI: Building Component Safety Information, Guide to Good Practice for Handling, Installing, Restraining & Bracing of Metal Plate Connected Wood Trusses.

Numbering System

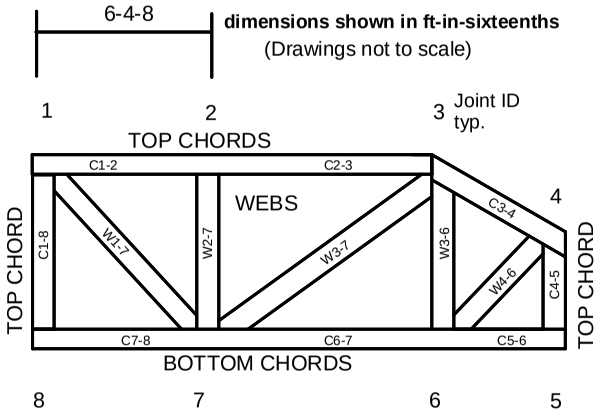

JOINTS ARE GENERALLY NUMBERED/LETTERED CLOCKWISE AROUND THE TRUSS STARTING AT THE JOINT FARTHEST TO THE LEFT.

CHORDS AND WEBS ARE IDENTIFIED BY END JOINT NUMBERS/LETTERS.

Product Code Approvals

ICC-ES Reports:

ESR-1988, ESR-2362, ESR-2685, ESR-3282
ESR-4722, ESL-1388

Design General Notes

Trusses are designed for wind loads in the plane of the truss unless otherwise shown.

Lumber design values are in accordance with ANSI/TPI 1 section 6.3 These truss designs rely on lumber values established by others.

© 2023 MiTek® All Rights Reserved

MiTek®

General Safety Notes

Failure to Follow Could Cause Property Damage or Personal Injury

1. Additional stability bracing for truss system, e.g. diagonal or X-bracing, is always required. See BCSI.
2. Truss bracing must be designed by an engineer. For wide truss spacing, individual lateral braces themselves may require bracing, or alternative Tor I bracing should be considered.
3. Never exceed the design loading shown and never stack materials on inadequately braced trusses.
4. Provide copies of this truss design to the building designer, erection supervisor, property owner and all other interested parties.
5. Cut members to bear tightly against each other.
6. Place plates on each face of truss at each joint and embed fully. Knots and wane at joint locations are regulated by ANSI/TPI 1.
7. Design assumes trusses will be suitably protected from the environment in accord with ANSI/TPI 1.
8. Unless otherwise noted, moisture content of lumber shall not exceed 19% at time of fabrication.
9. Unless expressly noted, this design is not applicable for use with fire retardant, preservative treated, or green lumber.
10. Camber is a non-structural consideration and is the responsibility of truss fabricator. General practice is to camber for dead load deflection.
11. Plate type, size, orientation and location dimensions indicated are minimum plating requirements.
12. Lumber used shall be of the species and size, and in all respects, equal to or better than that specified.
13. Top chords must be sheathed or purlins provided at spacing indicated on design.
14. Bottom chords require lateral bracing at 10 ft. spacing, or less, if no ceiling is installed, unless otherwise noted.
15. Connections not shown are the responsibility of others.
16. Do not cut or alter truss member or plate without prior approval of an engineer.
17. Install and load vertically unless indicated otherwise.
18. Use of green or treated lumber may pose unacceptable environmental, health or performance risks. Consult with project engineer before use.
19. Review all portions of this design (front, back, words and pictures) before use. Reviewing pictures alone is not sufficient.
20. Design assumes manufacture in accordance with ANSI/TPI 1 Quality Criteria.
21. The design does not take into account any dynamic or other loads other than those expressly stated.