DATE 03/17/2011

Columbia County Building Permit

This Permit Must Be Prominently Posted on Premises During Construction

PERMIT
000029248

APPLICANT AARON NICKELSON PHONE 386.487.1466

ADDRESS 426 SW COMMERCE DRIVE, TE. 130 LAKE CITY FL 32025

OWNER ANDREW SCHNEIDER PHONE 386.623.6066

ADDRESS 324 NIGHTSHADE DRIVE LAKE CITY FL 32024

CONTRACTOR AARON NICKELSON PHONE 386.487.1466

LOCATION OF PROPERTY 47-S TO WESTER RD,TL GO TO S/D,TL GO TO DANDELION,TL TO NIGHTSHADE,TR LAST HOME ON R.

TYPE DEVELOPMENT ATTACHED GARAGE ESTIMATED COST OF CONSTRUCTION 82400.00

HEATED FLOOR AREA 563.00 TOTAL AREA 1648.00 HEIGHT 23.00 STORIES 1

FOUNDATION CONC WALLS FRAMED ROOF PITCH 9'12 FLOOR CONC

LAND USE & ZONING RSF-1 MAX. HEIGHT 35

Minimum Set Back Requirments: STREET-FRONT 25.00 REAR 15.00 SIDE 10.00

NO. EX.D.U. 1 FLOOD ZONE X DEVELOPMENT PERMIT NO.

PARCEL ID 30-4S-17-08898-119 SUBDIVISION WESTER WOODS

LOT 19 BLOCK PHASE UNIT TOTAL ACRES 1.19

Culvert Permit No.	Culvert Waiver	Contractor's License Number	Applicant/Owner/Contractor
		CBC1258040	

Driveway Connection	Septic Tank Number	LU & Zoning checked by	Approved for Issuance	New Resident
EXISTING		BLK	TC	

COMMENTS: ACCESSORY USE. NOC ON FILE.

Check # or Cash 2709

FOR BUILDING & ZONING DEPARTMENT ONLY

(footer/Slab)

Temporary Power _____ date/app. by Foundation _____ date/app. by Monolithic _____ date/app. by

Under slab rough-in plumbing _____ date/app. by Slab _____ date/app. by Sheathing/Nailing _____ date/app. by

Framing _____ date/app. by Insulation _____ date/app. by

Rough-in plumbing above slab and below wood floor _____ date/app. by Electrical rough-in _____ date/app. by

Heat & Air Duct _____ date/app. by Peri. beam (Lintel) _____ date/app. by Pool _____ date/app. by

Permanent power _____ date/app. by C.O. Final _____ date/app. by Culvert _____ date/app. by

Pump pole _____ date/app. by Utility Pole _____ date/app. by M/H tie downs, blocking, electricity and plumbing _____ date/app. by

Reconnection _____ date/app. by RV _____ date/app. by Re-roof _____ date/app. by

BUILDING PERMIT FEE $ 415.00 CERTIFICATION FEE $ 8.24 SURCHARGE FEE $ 8.24

MISC. FEES $ 0.00 ZONING CERT. FEE $ 50.00 FIRE FEE $ 0.00 WASTE FEE $

FLOOD DEVELOPMENT FEE $ FLOOD ZONE FEE $ CULVERT FEE $ **TOTAL FEE** 481.48

INSPECTORS OFFICE CLERKS OFFICE

NOTICE: IN ADDITION TO THE REQUIREMENTS OF THIS PERMIT, THERE MAY BE ADDITIONAL RESTRICTIONS APPLICABLE TO THIS PROPERTY THAT MAY BE FOUND IN THE PUBLIC RECORDS OF THIS COUNTY. AND THERE MAY BE ADDITIONAL PERMITS REQUIRED FROM OTHER GOVERNMENTAL ENTITIES SUCH AS WATER MANAGEMENT DISTRICTS, STATE AGENCIES, OR FEDERAL AGENCIES.

"WARNING TO OWNER: YOUR FAILURE TO RECORD A NOTICE OF COMMENCEMENT MAY RESULT IN YOUR PAYING TWICE FOR IMPROVEMENTS TO YOUR PROPERTY. IF YOU INTEND TO OBTAIN FINANCING, CONSULT WITH YOUR LENDER OR AN ATTORNEY BEFORE RECORDING YOUR NOTICE OF COMMENCEMENT."

EVERY PERMIT ISSUED SHALL BECOME INVALID UNLESS THE WORK AUTHORIZED BY SUCH PERMIT IS COMMENCED WITHIN 180 DAYS AFTER ITS ISSUANCE, OR IF THE WORK AUTHORIZED BY SUCH PERMIT IS SUSPENDED OR ABANDONED FOR A PERIOD OF 180 DAYS AFTER THE TIME THE WORK IS COMMENCED. A VALID PERMIT RECIEVES AN APPROVED INSPECTION EVERY 180 DAYS. WORK SHALL BE CONSIDERED NOT SUSPENDED, ABANDONED OR INVALID WHEN THE PERMIT HAS RECIEVED AN APPROVED INSPECTION WITHIN 180 DAYS OT THE PREVIOUS INSPECTION.

The Issuance of this Permit Does Not Waive Compliance by Permittee with Deed Restrictions.

ITW Building Components Group, Inc.

1950 Marley Drive Haines City, FL 33844
Florida Engineering Certificate of Authorization Number: 0 278
Florida Certificate of Product Approval # FL1999
 Document ID:1U9Q487-Z0124094559

DOUGLAS FLEMING LICENSE No. 66648 STATE OF FLORIDA PROFESSIONAL ENGINEER
02/24/2011

Truss Fabricator:	Anderson Truss Company
Job Identification:	11-036--Fill in later AARON NICKELSON/SCHNEIDER -- , **
Truss Count:	21
Model Code:	Florida Building Code 2007 and 2009 Supplement
Truss Criteria:	FBC2007Res/TPI-2002(STD);FBC2007Res/TPI-2007(STD)
Engineering Software:	Alpine Software,Version 9.05.
Structural Engineer of Record:	The identity of the structural EOR did not exist as of
Address:	the seal date per section 61G15-31.003(5a) of the FAC
Minimum Design Loads:	Roof - 40.0 PSF @ 1.25 Duration
	Floor - 55.0 PSF @ 1.00 Duration
	Wind - 110 MPH ASCE 7-05 -Closed

Notes:

1. Determination as to the suitability of these truss components for the structure is the responsibility of the building designer/engineer of record, as defined in ANSI/TPI 1
2. The drawing date shown on this index sheet must match the date shown on the individual truss component drawing.
3. As shown on attached drawings; the drawing number is preceded by: HCUSR487

Douglas M. Fleming
-Truss Design Engineer-

1950 Marley Drive
Haines City, FL 33844

Details: A1103005-GBLLETIN-A1101505-PB120-

#	Ref Description	Drawing#	Date
1	57014--A	11055007	02/24/11
2	57015--A1	11055008	02/24/11
3	57016--AG1	11055009	02/24/11
4	57017--AG2	11055010	02/24/11
5	57018--AGE	11055011	02/24/11
6	57019--AG3	11055012	02/24/11
7	57020--B	11055001	02/24/11
8	57021--C	11055002	02/24/11
9	57022--CGE	11055013	02/24/11
10	57023--C1	11055003	02/24/11
11	57024--DGE	11055014	02/24/11
12	57025--D	11055004	02/24/11
13	57026--F	11055015	02/24/11
14	57027--FG	11055016	02/24/11
15	57028--FGE	11055017	02/24/11
16	57029--F1	11055018	02/24/11
17	57030--F1G	11055019	02/24/11
18	57031--M	11055005	02/24/11
19	57032--M1	11055006	02/24/11
20	57033--AP	11055020	02/24/11
21	57034--APGE	11055021	02/24/11

COLUMBIA COUNTY BUILDING DEPARTMENT Received for FILE COPY Code Compliance PLANS EXAMINER

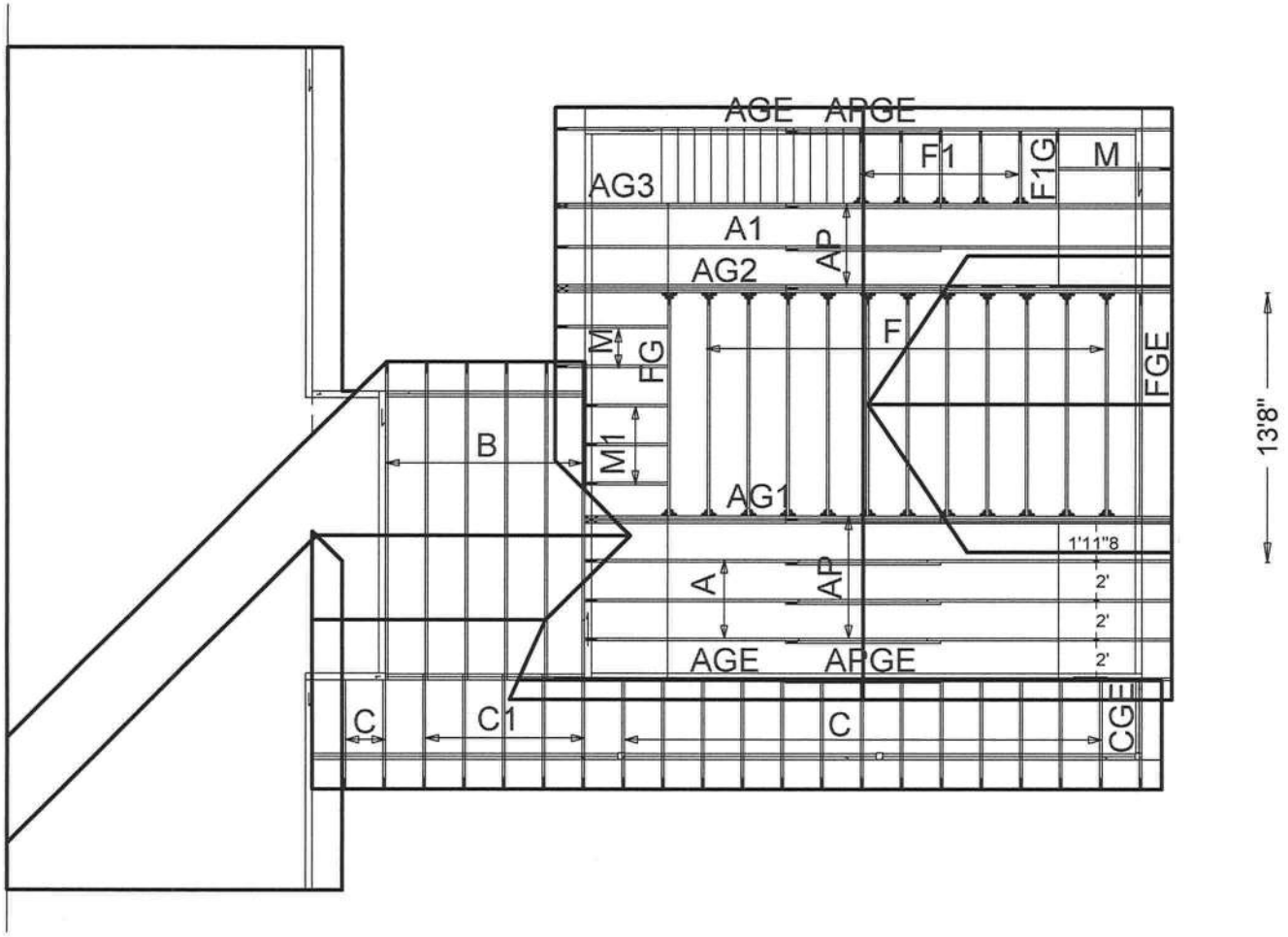

AARON NICKELSON/SCHNEIDER

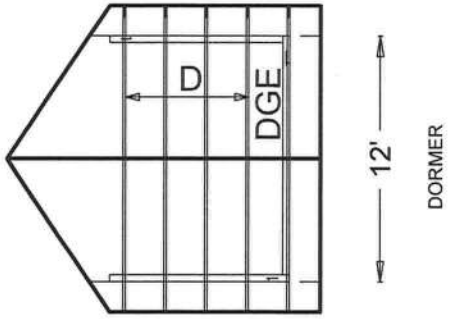

JOB DESCRIPTION:: Fill in later
/: AARON NICKELSON/SCHNEIDER

JOB NO:
11-036

PAGE NO:

(11-036--Fill in later AARON NICKELSON/SCHNEIDER -- , ** - A)

Top chord 2x8 SP SS :T2 2x8 SP #1 Dense:
Bot chord 2x4 SP #1 :B2, B4 2x4 SP #2 Dense:
Webs 2x4 SP #3 :W6, W16 2x4 SP #2 Dense:

End verticals not exposed to wind pressure.

Roof overhang supports 2.00 psf soffit load.

Calculated horizontal deflection is 0.19" due to live load and 0.20" due to dead load.

Bottom chord checked for 10.00 psf non-concurrent live load.

BC attic room floor loading: LL = 40.00 psf; DL = 10.00 psf; from 4-2-0 to 23-10-0.

+ LATERALLY BRACE ALL BC AT 24" OC.

(**) 5 plate(s) require special positioning. Refer to scaled plate plot details for special positioning requirements.

110 mph wind, 15.73 ft mean hgt, ASCE 7-05, CLOSED bldg, Located anywhere in roof, CAT II, EXP B, wind TC DL=5.0 psf, wind BC DL=5.0 psf. Iw=1.00 GCpi(+/-)=0.18

Wind reactions based on MWFRS pressures.

In lieu of structural panels use purlins to brace all flat TC @ 24" OC.

Collar-tie braced with continuous lateral bracing at 24" OC. or rigid ceiling.

Deflection meets L/240 live and L/180 total load.

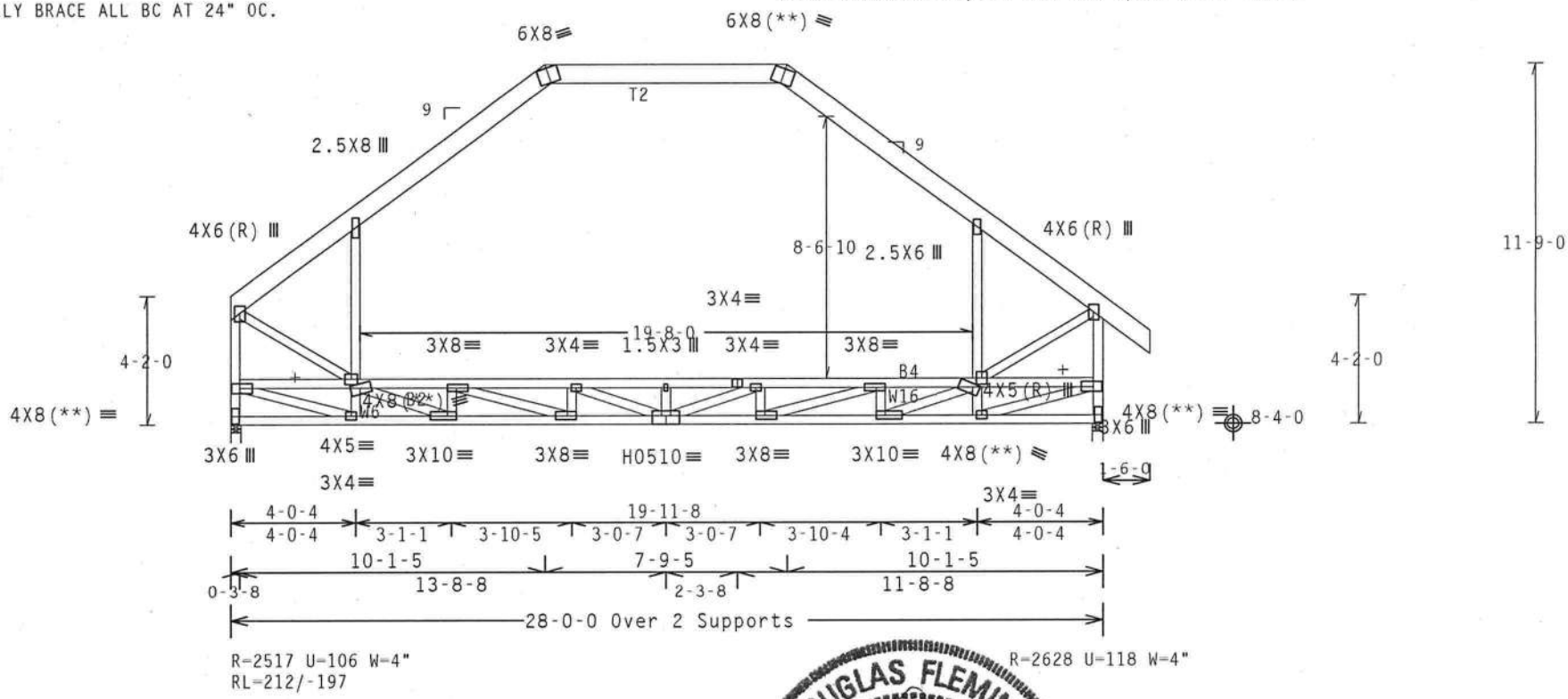

Design Crit: FBC2007Res/TPI-2002(SPD) 9.05.03.0319.16

PLT TYP. 20 Gauge HS,Wave FT/RT=10%(0%)/0(0) QTY:3 FL/-/4/-/-/R/- Scale =.1875"/Ft.

ALPINE
ITW Building Components Group Inc.
Haines City, FL 33844
FL COA #0 278

WARNING TRUSSES REQUIRE EXTREME CARE IN FABRICATION, HANDLING, SHIPPING, INSTALLING AND BRACING. REFER TO BCSI (BUILDING COMPONENT SAFETY INFORMATION), PUBLISHED BY TPI (TRUSS PLATE INSTITUTE, 218 NORTH LEE STREET, SUITE 312, ALEXANDRIA, VA, 22314) AND WTCA (WOOD TRUSS COUNCIL OF AMERICA, 6300 ENTERPRISE LANE, MADISON, WI 53719) FOR SAFETY PRACTICES PRIOR TO PERFORMING THESE FUNCTIONS. UNLESS OTHERWISE INDICATED TOP CHORD SHALL HAVE PROPERLY ATTACHED STRUCTURAL PANELS AND BOTTOM CHORD SHALL HAVE A PROPERLY ATTACHED RIGID CEILING.

IMPORTANTFURNISH A COPY OF THIS DESIGN TO THE INSTALLATION CONTRACTOR. ITW BCG, INC. SHALL NOT BE RESPONSIBLE FOR ANY DEVIATION FROM THIS DESIGN; ANY FAILURE TO BUILD THE TRUSS IN CONFORMANCE WITH TPI; OR FABRICATING, HANDLING, SHIPPING, INSTALLING & BRACING OF TRUSSES.
DESIGN CONFORMS WITH APPLICABLE PROVISIONS OF NDS (NATIONAL DESIGN SPEC. BY AF&PA) AND TPI. THIS DESIGN CONNECTOR PLATES ARE MADE OF 20/18/16GA (W,H/SS/K) ASTM A653 GRADE 40/60 (W, K/H,SS) GALV. STEEL. APPLY PLATES TO EACH FACE OF TRUSS AND, UNLESS OTHERWISE LOCATED ON THIS DESIGN, POSITION PER DRAWING. IT IS ANY INSPECTION OF PLATES FOLLOWED BY (1) SHALL BE PER ANNEX A3 OF TPI1-2002 SEC.3. A SEAL ON THIS DRAWING INDICATES ACCEPTANCE OF PROFESSIONAL ENGINEERING RESPONSIBILITY SOLELY FOR THE TRUSS COMPONENT DESIGN SHOWN. THE SUITABILITY AND USE OF THIS COMPONENT FOR ANY BUILDING IS THE RESPONSIBILITY OF THE BUILDING DESIGNER PER ANSI/TPI 1 SEC. 2.

DOUGLAS FLEMING LICENSE No. 66648 STATE OF FLORIDA PROFESSIONAL ENGINEER

02/24/2011

TC LL	20.0 PSF	REF	R487-- 57014
TC DL	10.0 PSF	DATE	02/24/11
BC DL	10.0 PSF	DRW	HCUSR487 11055007
BC LL	0.0 PSF	HC-ENG	DF/DF
TOT.LD.	40.0 PSF	SEQN-	184553
DUR.FAC.	1.25		
SPACING	24.0"	JREF-	1U9Q487_Z01

THIS DWG PREPARED FROM COMPUTER INPUT (LOADS & DIMENSIONS) SUBMITTED BY TRUSS MFR.

(11-036--Fill in later AARON NICKELSON/SCHNEIDER -- , ** - A1)

Top chord 2x8 SP SS :T2 2x8 SP #1 Dense:
Bot chord 2x4 SP #1 :B2, B4 2x4 SP #2 Dense:
Webs 2x4 SP #3 :W6, W16 2x4 SP #2 Dense:

End verticals not exposed to wind pressure.

Roof overhang supports 2.00 psf soffit load.

Calculated horizontal deflection is 0.16" due to live load and 0.24" due to dead load.

Bottom chord checked for 10.00 psf non-concurrent live load.

BC attic room floor loading: LL = 40.00 psf; DL = 10.00 psf; from 4-2-0 to 23-10-0.

Laterally brace chord member above filler @ 24" O.C. including a lateral brace at chord ends.

(**) 5 plate(s) require special positioning. Refer to scaled plate plot details for special positioning requirements.

110 mph wind, 15.73 ft mean hgt, ASCE 7-05, CLOSED bldg, Located anywhere in roof, CAT II, EXP B, wind TC DL=5.0 psf, wind BC DL=5.0 psf. Iw=1.00 GCpi(+/-)=0.18

Wind reactions based on MWFRS pressures.

In lieu of structural panels use purlins to brace all flat TC @ 24" OC.

Collar-tie braced with continuous lateral bracing at 24" OC. or rigid ceiling.

Deflection meets L/240 live and L/180 total load.

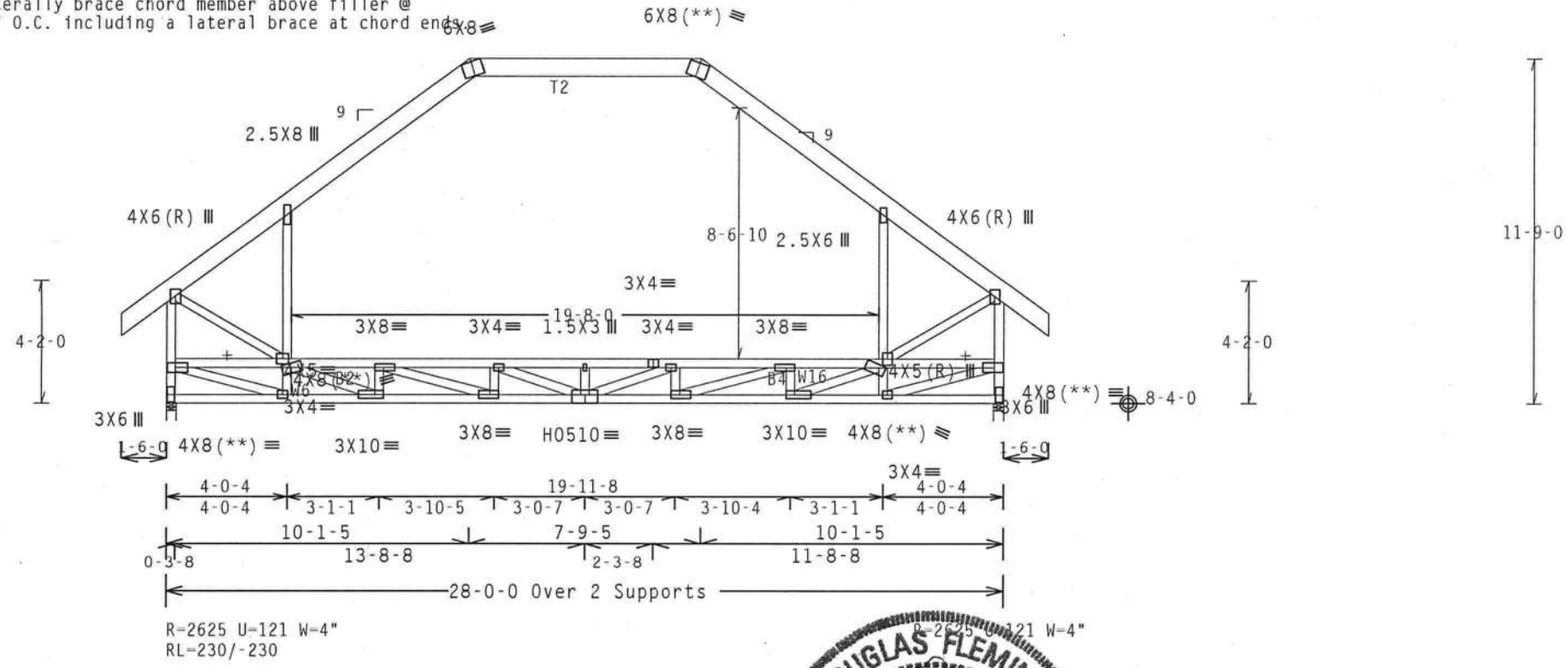

Design Crit: FBC2007Res/TPI-2002(SPD)

PLT TYP. 20 Gauge HS,Wave | FT/RT=10%(0%)/0(0) | 9.05.03.0319.16 | TY:1 | FL/-/4/-/-/R/- | Scale =.1875"/Ft.

ALPINE
ITW Building Components Group Inc.
Haines City, FL 33844
FL COA #0 278

WARNING TRUSSES REQUIRE EXTREME CARE IN FABRICATION, HANDLING, SHIPPING, INSTALLING AND BRACING. REFER TO BCSI (BUILDING COMPONENT SAFETY INFORMATION), PUBLISHED BY TPI (TRUSS PLATE INSTITUTE, 218 NORTH LEE STREET, SUITE 312, ALEXANDRIA, VA, 22314) AND WTCA (WOOD TRUSS COUNCIL OF AMERICA, 6300 ENTERPRISE LANE, MADISON, WI 53719) FOR SAFETY PRACTICES PRIOR TO PERFORMING THESE FUNCTIONS. UNLESS OTHERWISE INDICATED TOP CHORD SHALL HAVE PROPERLY ATTACHED STRUCTURAL PANELS AND BOTTOM CHORD SHALL HAVE A PROPERLY ATTACHED RIGID CEILING.

IMPORTANTFURNISH A COPY OF THIS DESIGN TO THE INSTALLATION CONTRACTOR. ITW BCG, INC. SHALL NOT BE RESPONSIBLE FOR ANY DEVIATION FROM THIS DESIGN; ANY FAILURE TO BUILD THE TRUSS IN CONFORMANCE WITH TPI1; OR FABRICATING, HANDLING, SHIPPING, INSTALLING & BRACING OF TRUSSES.
DESIGN CONFORMS WITH APPLICABLE PROVISIONS OF NDS (NATIONAL DESIGN SPEC, BY AF&PA) AND TPI. THIS DESIGN CONNECTOR PLATES ARE MADE OF 20/18/16GA (W,H/SS/K) ASTM A653 GRADE 40/60 (W, K/H,SS) GALV. STEEL. APPLY PLATES TO EACH FACE OF TRUSS AND, UNLESS OTHERWISE LOCATED ON THIS DESIGN, POSITION PER DRAWING. ANY INSPECTION OF PLATES FOLLOWED BY (1) SHALL BE PER ANNEX A3 OF TPI1-2002 SEC.3. A SEAL ON THIS DRAWING INDICATES ACCEPTANCE OF PROFESSIONAL ENGINEERING RESPONSIBILITY SOLELY FOR THE TRUSS COMPONENT DESIGN SHOWN. THE SUITABILITY AND USE OF THIS COMPONENT FOR ANY BUILDING IS THE RESPONSIBILITY OF THE BUILDING DESIGNER PER ANSI/TPI 1 SEC. 2.

DOUGLAS FLEMING LICENSE No. 66648 STATE OF FLORIDA PROFESSIONAL ENGINEER

02/24/2011

TC LL	20.0 PSF	REF	R487-- 57015
TC DL	10.0 PSF	DATE	02/24/11
BC DL	10.0 PSF	DRW	HCUSR487 11055008
BC LL	0.0 PSF	HC-ENG	DF/DF
TOT.LD.	40.0 PSF	SEQN-	184539
DUR.FAC.	1.25		
SPACING	24.0"	JREF-	1U9Q487_Z01

(11-036--Fill in later AARON NICKELSON/SCHNEIDER -- , ** - AG1)

Top chord 2x8 SP SS
Bot chord 2x4 SP #1 :B2, B4 2x4 SP #2 Dense:
:B3 2x6 SP #1 Dense:
Webs 2x4 SP #3 :W6, W16, W21 2x4 SP #2 Dense:

Special loads
------(Lumber Dur.Fac.=1.25 / Plate Dur.Fac.=1.25)
TC- From 65 plf at 0.00 to 65 plf at 4.17
TC- From 247 plf at 4.17 to 247 plf at 10.11
TC- From 247 plf at 10.11 to 247 plf at 17.89
TC- From 247 plf at 17.89 to 247 plf at 18.69
TC- From 387 plf at 18.69 to 440 plf at 23.83
TC- From 415 plf at 23.83 to 458 plf at 28.00
TC- From 65 plf at 28.00 to 65 plf at 29.50
BC- From 20 plf at 0.00 to 20 plf at 4.17
BC- From 120 plf at 4.17 to 120 plf at 23.83
BC- From 20 plf at 23.83 to 20 plf at 28.00
BC- From 5 plf at 28.00 to 5 plf at 29.50
BC- 695.05 lb Conc. Load at 4.23
BC- 623.00 lb Conc. Load at 6.23, 8.23,10.23,12.23
14.23,16.23,18.23,20.23,22.23,24.23,26.23
BC- 100.73 lb Conc. Load at 23.83

Roof overhang supports 2.00 psf soffit load.

Calculated horizontal deflection is 0.24" due to live load and 0.22" due to dead load.

(A) #3 or better scab brace. Same size & 80% length of web member. Attach with 10d Box or Gun (0.128"x3",min.)nails @ 6" OC.

In lieu of structural panels use purlins to brace all flat TC @ 24" OC.

Collar-tie braced with continuous lateral bracing at 24" OC. or rigid ceiling.

THE BUILDING DESIGNER SHALL EVALUATE AND APPROVE LOAD MAGNITUDES and LOCATIONS. THE TRUSS ENGINEER IS NOT RESPONSIBLE FOR LOAD MAGNITUDES AND LOCATIONS.

3 COMPLETE TRUSSES REQUIRED

Nail Schedule:0.131"x3" nails
Top Chord: 1 Row @ 5.25" o.c.
Bot Chord: 1 Row @ 4.50" o.c.
Webs : 1 Row @ 4" o.c.
Repeat nailing as each layer is applied. Use equal spacing between rows and stagger nails in each row to avoid splitting. 4" o.c. spacing of nails perpendicular and parallel to grain required in area over bearings greater than 4"

(**) 4 plate(s) require special positioning. Refer to scaled plate plot details for special positioning requirements.

110 mph wind, 15.73 ft mean hgt, ASCE 7-05, CLOSED bldg, Located anywhere in roof, CAT II, EXP B, wind TC DL=5.0 psf, wind BC DL=5.0 psf. Iw=1.00 GCpi(+/-)=0.18

Wind reactions based on MWFRS pressures.

End verticals not exposed to wind pressure.

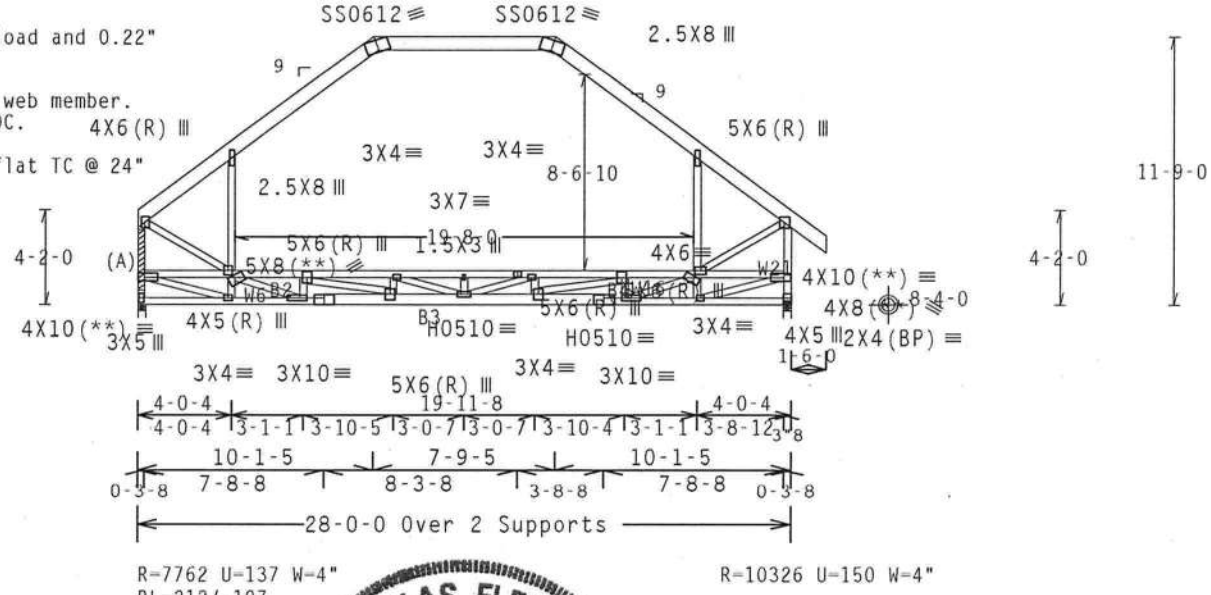

R=7762 U=137 W=4"
RL=212/-197

R=10326 U=150 W=4"

PLT TYP. 20 Gauge HS,18 Gauge HS, Wave Design Crit: FBC2007Res/TPI-2002(STD) FT/RT=10%(0%)/0(0) 9.05.03.0319.16 QTY:1 FL/-/4/-/-/R/- Scale =.125"/Ft.

ALPINE
ITW Building Components Group Inc.
Haines City, FL 33844
FL COA #0 278

WARNING TRUSSES REQUIRE EXTREME CARE IN FABRICATION, HANDLING, SHIPPING, INSTALLING AND BRACING. REFER TO BCSI (BUILDING COMPONENT SAFETY INFORMATION), PUBLISHED BY TPI (TRUSS PLATE INSTITUTE, 218 NORTH LEE STREET, SUITE 312, ALEXANDRIA, VA. 22314) AND WTCA (WOOD TRUSS COUNCIL OF AMERICA, 6300 ENTERPRISE LANE, MADISON, WI 53719) FOR SAFETY PRACTICES PRIOR TO PERFORMING THESE FUNCTIONS. UNLESS OTHERWISE INDICATED TOP CHORD SHALL HAVE PROPERLY ATTACHED STRUCTURAL PANELS AND BOTTOM CHORD SHALL HAVE A PROPERLY ATTACHED RIGID CEILING.

IMPORTANTFURNISH A COPY OF THIS DESIGN TO THE INSTALLATION CONTRACTOR. ITW BCG, INC. SHALL NOT BE RESPONSIBLE FOR ANY DEVIATION FROM THIS DESIGN; ANY FAILURE TO BUILD THE TRUSS IN COMPLIANCE WITH TPI; OR FABRICATING, HANDLING, SHIPPING, INSTALLING & BRACING OF TRUSSES.
DESIGN CONFORMS WITH APPLICABLE PROVISIONS OF NDS (NATIONAL DESIGN SPEC. BY AF&PA) AND TPI. ITW BCG CONNECTOR PLATES ARE MADE OF 20/18/16GA (W,H/SS/K) ASTM A653 GRADE 40/60 (W, K/H,SS) GALV. STEEL. ONLY PLATES TO EACH FACE OF TRUSS AND, UNLESS OTHERWISE LOCATED ON THIS DESIGN, POSITION PER DRAWING. LEAD ANY INSPECTION OF PLATES FOLLOWED BY (1) SHALL BE PER ANNEX A3 OF TPI1-2002 SEC.3. A SEALED TOP DRAWING INDICATES ACCEPTANCE OF PROFESSIONAL ENGINEERING RESPONSIBILITY SOLELY FOR THE TRUSS COMPONENT DESIGN SHOWN. THE SUITABILITY AND USE OF THIS COMPONENT FOR ANY BUILDING IS THE RESPONSIBILITY OF THE BUILDING DESIGNER PER ANSI/TPI 1 SEC. 2.

DOUGLAS FLEMING LICENSE No. 66648 STATE OF FLORIDA PROFESSIONAL ENGINEER
02/24/2011

TC LL	20.0 PSF	REF	R487-- 57016
TC DL	10.0 PSF	DATE	02/24/11
BC DL	10.0 PSF	DRW	HCUSR487 11055009
BC LL	0.0 PSF	HC-ENG	DF/DF
TOT.LD.	40.0 PSF	SEQN-	184550
DUR.FAC.	1.25		
SPACING	24.0"	JREF-	1U9Q487_Z01

(11-036--Fill in later AARON NICKELSON/SCHNEIDER -- , ** - AG2)

Top chord 2x8 SP SS
Bot chord 2x4 SP #1 :B2, B4 2x4 SP #2 Dense:
:B3 2x6 SP #1 Dense:
Webs 2x4 SP #3 :W6, W16, W21 2x4 SP #2 Dense:

Special loads
------(Lumber Dur.Fac.=1.25 / Plate Dur.Fac.=1.25)

TC- From	65 plf at	-1.50 to	65 plf at	0.00
TC- From	65 plf at	0.00 to	65 plf at	4.17
TC- From	247 plf at	4.17 to	247 plf at	10.11
TC- From	247 plf at	10.11 to	247 plf at	17.89
TC- From	247 plf at	17.89 to	247 plf at	18.69
TC- From	387 plf at	18.69 to	440 plf at	23.83
TC- From	415 plf at	23.83 to	458 plf at	28.00
TC- From	65 plf at	28.00 to	65 plf at	29.50
BC- From	5 plf at	-1.50 to	5 plf at	0.00
BC- From	20 plf at	0.00 to	20 plf at	4.17
BC- From	120 plf at	4.17 to	120 plf at	23.83
BC- From	20 plf at	23.83 to	20 plf at	28.00
BC- From	5 plf at	28.00 to	5 plf at	29.50

BC- 695.05 lb Conc. Load at 4.23
BC- 623.00 lb Conc. Load at 6.23, 8.23,10.23,12.23
14.23,16.23,18.23,20.23,22.23,24.23,26.23
BC- 100.73 lb Conc. Load at 23.83

Roof overhang supports 2.00 psf soffit load.

Calculated horizontal deflection is 0.24" due to live load and 0.23" due to dead load.

In lieu of structural panels use purlins to brace all flat TC @ 24" OC.

Collar-tie braced with continuous lateral bracing at 24" OC. or rigid ceiling.

THE BUILDING DESIGNER SHALL EVALUATE AND APPROVE LOAD MAGNITUDES and LOCATIONS. THE TRUSS ENGINEER IS NOT RESPONSIBLE FOR LOAD MAGNITUDES AND LOCATIONS.

3 COMPLETE TRUSSES REQUIRED

Nail Schedule:0.131"x3" nails
Top Chord: 1 Row @ 5.25" o.c.
Bot Chord: 1 Row @ 4.50" o.c.
Webs : 1 Row @ 4" o.c.
Repeat nailing as each layer is applied. Use equal spacing between rows and stagger nails in each row to avoid splitting. 4" o.c. spacing of nails perpendicular and parallel to grain required in area over bearings greater than 4"

(**) 5 plate(s) require special positioning. Refer to scaled plate plot details for special positioning requirements.

110 mph wind, 15.73 ft mean hgt, ASCE 7-05, CLOSED bldg, Located anywhere in roof, CAT II, EXP B, wind TC DL=5.0 psf, wind BC DL=5.0 psf. Iw=1.00 GCpi(+/-)=0.18

Wind reactions based on MWFRS pressures.

End verticals not exposed to wind pressure.

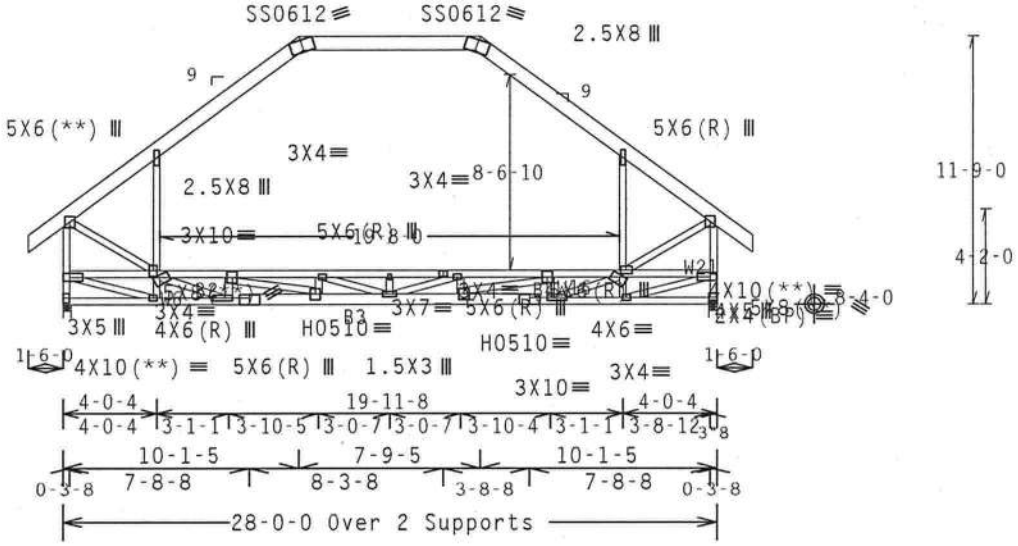

R=7870 U=68[illegible] W=[illegible]
RL=230/[illegible]

R=10323 U=659 W=4"

PLT TYP. 20 Gauge HS,18 Gauge HS, Wave Design Crit: FBC2007Res/TPI-2002(2[illegible] FT/RT=10%(0%)/0(0) [illegible]9.05.03.0319.16[illegible] QTY:1 FL/-/4/-/-/R/- Scale =.125"/Ft.

ALPINE
ITW Building Components Group Inc.
Haines City, FL 33844
FL COA #0 278

WARNING TRUSSES REQUIRE EXTREME CARE IN FABRICATION, HANDLING, SHIPPING, INSTALLING AND BRACING. REFER TO BCSI (BUILDING COMPONENT SAFETY INFORMATION), PUBLISHED BY TPI (TRUSS PLATE INSTITUTE, 218 NORTH LEE STREET, SUITE 312, ALEXANDRIA, VA, 22314) AND WTCA (WOOD TRUSS COUNCIL OF AMERICA, 6300 ENTERPRISE LANE, MADISON, WI 53719) FOR SAFETY PRACTICES PRIOR TO PERFORMING THESE FUNCTIONS. UNLESS OTHERWISE INDICATED TOP CHORD SHALL HAVE PROPERLY ATTACHED STRUCTURAL PANELS AND BOTTOM CHORD SHALL HAVE A PROPERLY ATTACHED RIGID CEILING.

IMPORTANTFURNISH A COPY OF THIS DESIGN TO THE INSTALLATION CONTRACTOR. ITW BCG, INC. SHALL NOT BE RESPONSIBLE FOR ANY DEVIATION FROM THIS DESIGN; ANY FAILURE TO BUILD THE TRUSS IN CONFORMANCE WITH TPI; OR FABRICATING, HANDLING, SHIPPING, INSTALLING & BRACING OF TRUSSES. DESIGN CONFORMS WITH APPLICABLE PROVISIONS OF NDS (NATIONAL DESIGN SPEC, BY AF&PA) AND TPI. CONNECTOR PLATES ARE MADE OF 20/18/16GA (W,H/SS/K) ASTM A653 GRADE 40/60 (W, K/H,SS) GALV. STEEL. APPLY PLATES TO EACH FACE OF TRUSS AND, UNLESS OTHERWISE LOCATED ON THIS DESIGN, POSITION PER DRAWING. ANY INSPECTION OF PLATES FOLLOWED BY (1) SHALL BE PER ANNEX A3 OF TPI1-2002 SEC.3. A SEALED TPI DRAWING INDICATES ACCEPTANCE OF PROFESSIONAL ENGINEERING RESPONSIBILITY SOLELY FOR THE TRUSS COMPONENT DESIGN SHOWN. THE SUITABILITY AND USE OF THIS COMPONENT FOR ANY BUILDING IS THE RESPONSIBILITY OF THE BUILDING DESIGNER PER ANSI/TPI 1 SEC. 2.

DOUGLAS FLEMING LICENSE No. 66648 STATE OF FLORIDA PROFESSIONAL ENGINEER
02/24/2011

TC LL	20.0 PSF	REF	R487-- 57017
TC DL	10.0 PSF	DATE	02/24/11
BC DL	10.0 PSF	DRW	HCUSR487 11055010
BC LL	0.0 PSF	HC-ENG	DF/DF
TOT.LD.	40.0 PSF	SEQN-	184545
DUR.FAC.	1.25		
SPACING	24.0"	JREF-	1U9Q487_Z01

(11-036--Fill in later AARON NICKELSON/SCHNEIDER -- , ** - AGE)

Top chord 2x8 SP SS :T2 2x8 SP #1 Dense:
Bot chord 2x4 SP #1 :B2, B4 2x4 SP #2 Dense:
Webs 2x4 SP #3 :W5, W15 2x4 SP #2 Dense:
:Stack Chord SC1 2x4 SP #2 Dense::Stack Chord SC2 2x4 SP #2 Dense:

End verticals not exposed to wind pressure.

Truss spaced at 24.0" OC designed to support 0-6-0 top chord outlookers. Cladding load shall not exceed 10.00 PSF. Top chord must not be cut or notched.

In lieu of structural panels use purlins to brace all flat TC @ 24" OC.

Bottom chord checked for 10.00 psf non-concurrent live load.

Collar-tie braced with continuous lateral bracing at 24" OC. or rigid ceiling.

Deflection meets L/240 live and L/180 total load.

+ LATERALLY BRACE ALL BC AT 24" OC.

+ MEMBER TO BE LATERALLY BRACED FOR OUT OF PLANE WIND LOADS TO TRUSS. BRACING SYSTEM TO BE DESIGNED AND FURNISHED BY OTHERS.

110 mph wind, 15.73 ft mean hgt, ASCE 7-05, CLOSED bldg, Located anywhere in roof, CAT II, EXP B, wind TC DL=5.0 psf, wind BC DL=5.0 psf. Iw=1.00 GCpi(+/-)=0.18

Wind reactions based on MWFRS pressures.

Roof overhang supports 2.00 psf soffit load.

See DWGS A11030050109 & GBLLETIN0109 for more requirements.

Stacked top chord must NOT be notched or cut in area (NNL). Attach stacked top chord (SC) to dropped top chord in notchable area using 3x4 tie-plates 24" o.c. Center plate on stacked/dropped chord interface, plate length perpendicular to chord length. Splice top chord in notchable area using 3x6.

BC attic room floor loading: LL = 40.00 psf; DL = 10.00 psf; from 4-2-0 to 23-10-0.

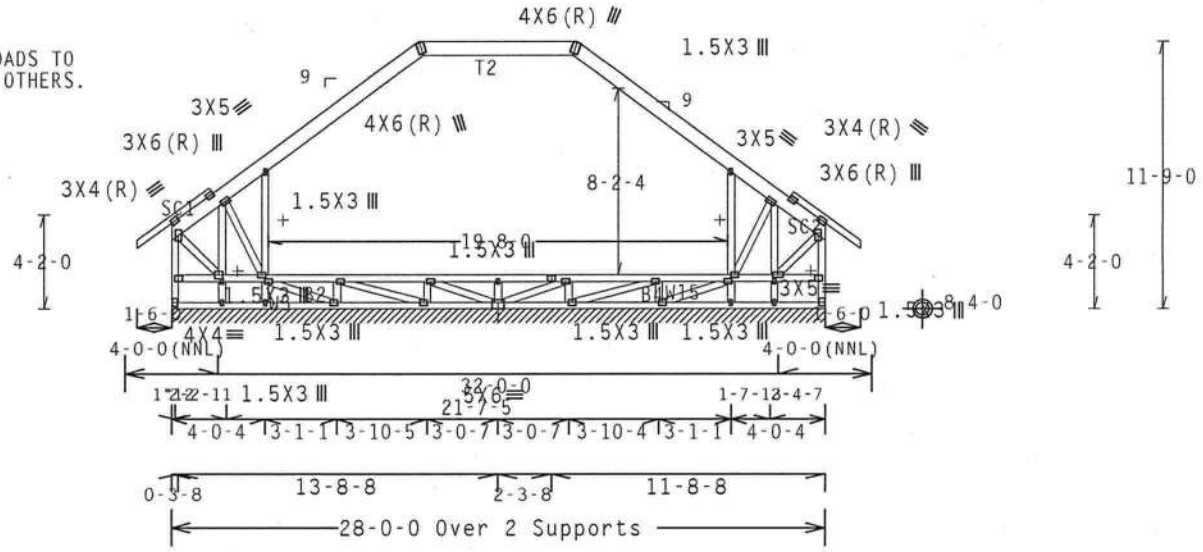

R=196 PLF U=6 PLF W=14-0-0
RL=13/-13 PLF W=14-0-0

Note: All Plates Are 3X4 Except As Shown.

Design Crit: FBC2007Res/TPI-2002(SPD)

PLT TYP. Wave FT/RT=10%(0%)/0(0) 9.05.03.0319.16 QTY:2 FL/-/4/-/-/R/- Scale =.125"/Ft.

ALPINE
ITW Building Components Group Inc.
Haines City, FL 33844
FL COA #0 278

WARNING TRUSSES REQUIRE EXTREME CARE IN FABRICATION, HANDLING, SHIPPING, INSTALLING AND BRACING. REFER TO BCSI (BUILDING COMPONENT SAFETY INFORMATION), PUBLISHED BY TPI (TRUSS PLATE INSTITUTE, 218 NORTH LEE STREET, SUITE 312, ALEXANDRIA, VA. 22314) AND WTCA (WOOD TRUSS COUNCIL OF AMERICA, 6300 ENTERPRISE LANE, MADISON, WI 53719) FOR SAFETY PRACTICES PRIOR TO PERFORMING THESE FUNCTIONS. UNLESS OTHERWISE INDICATED TOP CHORD SHALL HAVE PROPERLY ATTACHED STRUCTURAL PANELS AND BOTTOM CHORD SHALL HAVE A PROPERLY ATTACHED RIGID CEILING.

IMPORTANTFURNISH A COPY OF THIS DESIGN TO THE INSTALLATION CONTRACTOR. ITW BCG, INC. SHALL NOT BE RESPONSIBLE FOR ANY DEVIATION FROM THIS DESIGN; ANY FAILURE TO BUILD THE TRUSS IN CONFORMANCE WITH TPI1; OR FABRICATING, HANDLING, SHIPPING, INSTALLING & BRACING OF TRUSSES.
DESIGN CONFORMS WITH APPLICABLE PROVISIONS OF NDS (NATIONAL DESIGN SPEC, BY AF&PA) AND TPI. CONNECTOR PLATES ARE MADE OF 20/18/16GA (W,H/SS/K) ASTM A653 GRADE 40/60 (W, K/H,SS) GALV. STEEL. APPLY PLATES TO EACH FACE OF TRUSS AND, UNLESS OTHERWISE LOCATED ON THIS DESIGN, POSITION PER DRAWING. ANY INSPECTION OF PLATES FOLLOWED BY (1) SHALL BE PER ANNEX A3 OF TPI1-2002 SEC.3. A SEAL ON THIS DRAWING INDICATES ACCEPTANCE OF PROFESSIONAL ENGINEERING RESPONSIBILITY SOLELY FOR THE TRUSS COMPONENT DESIGN SHOWN. THE SUITABILITY AND USE OF THIS COMPONENT FOR ANY BUILDING IS THE RESPONSIBILITY OF THE BUILDING DESIGNER PER ANSI/TPI 1 SEC. 2.

DOUGLAS FLEMING LICENSE No. 66648 STATE OF FLORIDA PROFESSIONAL ENGINEER
02/24/2011

TC LL	20.0 PSF	REF R487-- 57018
TC DL	10.0 PSF	DATE 02/24/11
BC DL	10.0 PSF	DRW HCUSR487 11055011
BC LL	0.0 PSF	HC-ENG DF/DF
TOT.LD.	40.0 PSF	SEQN- 184510
DUR.FAC.	1.25	
SPACING	24.0"	JREF- 1U9Q487_Z01

(11-036--Fill in later AARON NICKELSON/SCHNEIDER -- , ** - AG3)

THIS DWG PREPARED FROM COMPUTER INPUT (LOADS & DIMENSIONS) SUBMITTED BY TRUSS MFR.

Top chord 2x8 SP SS
Bot chord 2x4 SP #1 :B2, B4 2x4 SP #2 Dense:
Webs 2x4 SP #3 :W6, W16 2x4 SP #2 Dense:

Special loads
------(Lumber Dur.Fac.=1.25 / Plate Dur.Fac.=1.25)
TC- From 98 plf at -1.50 to 98 plf at 0.00
TC- From 98 plf at 0.00 to 98 plf at 4.17
TC- From 135 plf at 4.17 to 135 plf at 10.11
TC- From 135 plf at 10.11 to 135 plf at 17.89
TC- From 135 plf at 17.89 to 135 plf at 23.83
TC- From 98 plf at 23.83 to 98 plf at 28.00
TC- From 98 plf at 28.00 to 98 plf at 29.50
BC- From 7 plf at -1.50 to 7 plf at 0.00
BC- From 30 plf at 0.00 to 30 plf at 4.17
BC- From 180 plf at 4.17 to 180 plf at 23.83
BC- From 30 plf at 23.83 to 30 plf at 28.00
BC- From 8 plf at 28.00 to 8 plf at 29.50
BC- 151.09 lb Conc. Load at 4.17
BC- 203.96 lb Conc. Load at 13.90,15.90,17.90,19.90
21.90
BC- 143.30 lb Conc. Load at 23.77
BC- 294.39 lb Conc. Load at 23.83

Calculated horizontal deflection is 0.19" due to live load and 0.17" due to dead load.

In lieu of structural panels use purlins to brace TC @ 24" OC.

Trusses to be spaced at 36.0" OC maximum.

Collar-tie braced with continuous lateral bracing at 24" OC.

Deflection meets L/240 live and L/180 total load.

THE BUILDING DESIGNER SHALL EVALUATE AND APPROVE LOAD MAGNITUDES and LOCATIONS. THE TRUSS ENGINEER IS NOT RESPONSIBLE FOR LOAD MAGNITUDES AND LOCATIONS.

+ LATERALLY BRACE ALL BC AT 24" OC.

2 COMPLETE TRUSSES REQUIRED

Nail Schedule:0.131"x3" nails
Top Chord: 1 Row @12.00" o.c.
Bot Chord: 1 Row @10.75" o.c.
Webs : 1 Row @ 4" o.c.
Use equal spacing between rows and stagger nails in each row to avoid splitting.
4" o.c. spacing of nails perpendicular and parallel to grain required in area over bearings greater than 4"

(**) 4 plate(s) require special positioning. Refer to scaled plate plot details for special positioning requirements.

110 mph wind, 15.73 ft mean hgt, ASCE 7-05, CLOSED bldg, Located anywhere in roof, CAT II, EXP B, wind TC DL=5.0 psf, wind BC DL=5.0 psf. Iw=1.00 GCpi(+/-)=0.18

Wind reactions based on MWFRS pressures.

End verticals not exposed to wind pressure.

Roof overhang supports 2.00 psf soffit load.

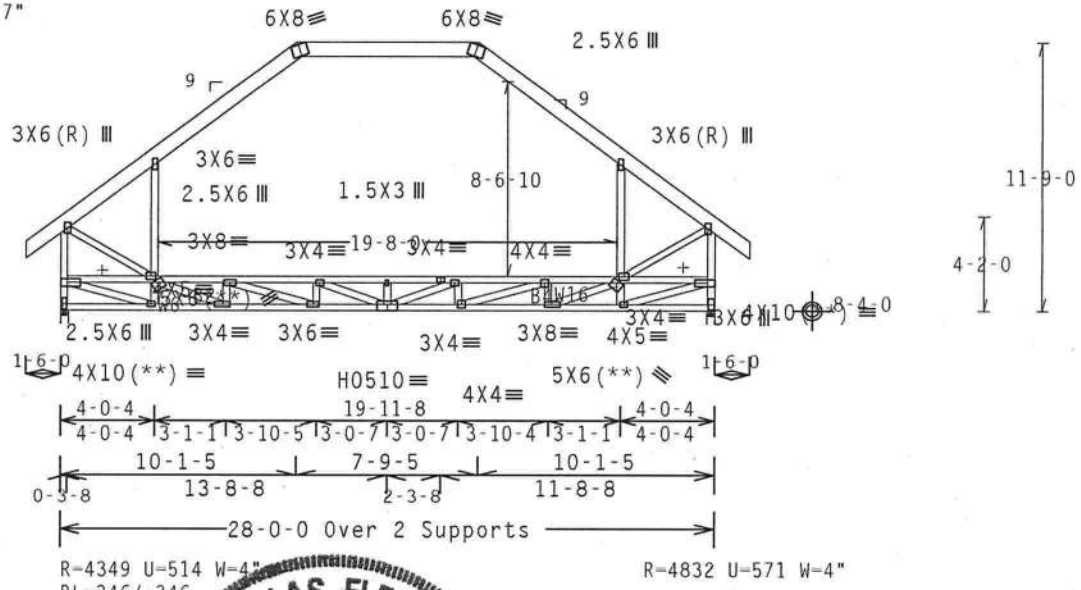

Design Crit: FBC2007Res/TPI-2002(SPI) FT/RT=10%(0%)/0(0) 9.05.03.0319.16

PLT TYP. 20 Gauge HS,Wave QTY:1 FL/-/4/-/-/R/- Scale =.125"/Ft.

ALPINE
ITW Building Components Group Inc.
Haines City, FL 33844
FL COA #0 278

WARNING TRUSSES REQUIRE EXTREME CARE IN FABRICATION, HANDLING, SHIPPING, INSTALLING AND BRACING. REFER TO BCSI (BUILDING COMPONENT SAFETY INFORMATION), PUBLISHED BY TPI (TRUSS PLATE INSTITUTE, 218 NORTH LEE STREET, SUITE 312, ALEXANDRIA, VA, 22314) AND WTCA (WOOD TRUSS COUNCIL OF AMERICA, 6300 ENTERPRISE LANE, MADISON, WI 53719) FOR SAFETY PRACTICES PRIOR TO PERFORMING THESE FUNCTIONS. UNLESS OTHERWISE INDICATED TOP CHORD SHALL HAVE PROPERLY ATTACHED STRUCTURAL PANELS AND BOTTOM CHORD SHALL HAVE A PROPERLY ATTACHED RIGID CEILING.

IMPORTANTFURNISH A COPY OF THIS DESIGN TO THE INSTALLATION CONTRACTOR. ITW BCG, INC. SHALL NOT BE RESPONSIBLE FOR ANY DEVIATION FROM THIS DESIGN; ANY FAILURE TO BUILD THE TRUSS IN CONFORMANCE WITH TPI; OR FABRICATING, HANDLING, SHIPPING, INSTALLING & BRACING OF TRUSSES. DESIGN CONFORMS WITH APPLICABLE PROVISIONS OF NDS (NATIONAL DESIGN SPEC. BY AF&PA) AND TPI. CONNECTOR PLATES ARE MADE OF 20/18/16GA (H,H/SS/K) ASTM A653 GRADE 40/60 (H, K/H,SS) GALV. STEEL. PLATES TO EACH FACE OF TRUSS AND, UNLESS OTHERWISE LOCATED ON THIS DESIGN, POSITION PER DRAWING. ANY INSPECTION OF PLATES FOLLOWED BY (I) SHALL BE PER ANNEX A3 OF TPI1-2002 SEC.3. A SEALED DRAWING INDICATES ACCEPTANCE OF PROFESSIONAL ENGINEERING RESPONSIBILITY SOLELY FOR THE TRUSS COMPONENT DESIGN SHOWN. THE SUITABILITY AND USE OF THIS COMPONENT FOR ANY BUILDING IS THE RESPONSIBILITY OF THE BUILDING DESIGNER PER ANSI/TPI 1 SEC. 2.

DOUGLAS FLEMING LICENSE No. 66648 STATE OF FLORIDA PROFESSIONAL ENGINEER

02/24/2011

TC LL	20.0 PSF	REF R487-- 57019
TC DL	10.0 PSF	DATE 02/24/11
BC DL	10.0 PSF	DRW HCUSR487 11055012
BC LL	0.0 PSF	HC-ENG DF/DF
TOT.LD.	40.0 PSF	SEQN- 184536
DUR.FAC.	1.25	
SPACING	36.0"	JREF- 1U9Q487_Z01

(11-036--Fill in later AARON NICKELSON/SCHNEIDER -- , ** - B)

THIS DWG PREPARED FROM COMPUTER INPUT (LOADS & DIMENSIONS) SUBMITTED BY TRUSS MFR.

Top chord 2x4 SP #2 Dense
Bot chord 2x4 SP #2 Dense
Webs 2x4 SP #3

Roof overhang supports 2.00 psf soffit load.

Truss passed check for 20 psf additional bottom chord live load in areas with 42"-high x 24"-wide clearance.

MWFRS loads based on trusses located at least 7.50 ft. from roof edge.

110 mph wind, 15.00 ft mean hgt, ASCE 7-05, CLOSED bldg, not located within 4.50 ft from roof edge, CAT II, EXP B, wind TC DL=5.0 psf, wind BC DL=5.0 psf. Iw=1.00 GCpi(+/-)=0.18

Wind reactions based on MWFRS pressures.

Bottom chord checked for 10.00 psf non-concurrent live load.

Deflection meets L/240 live and L/180 total load. Creep increase factor for dead load is 1.50.

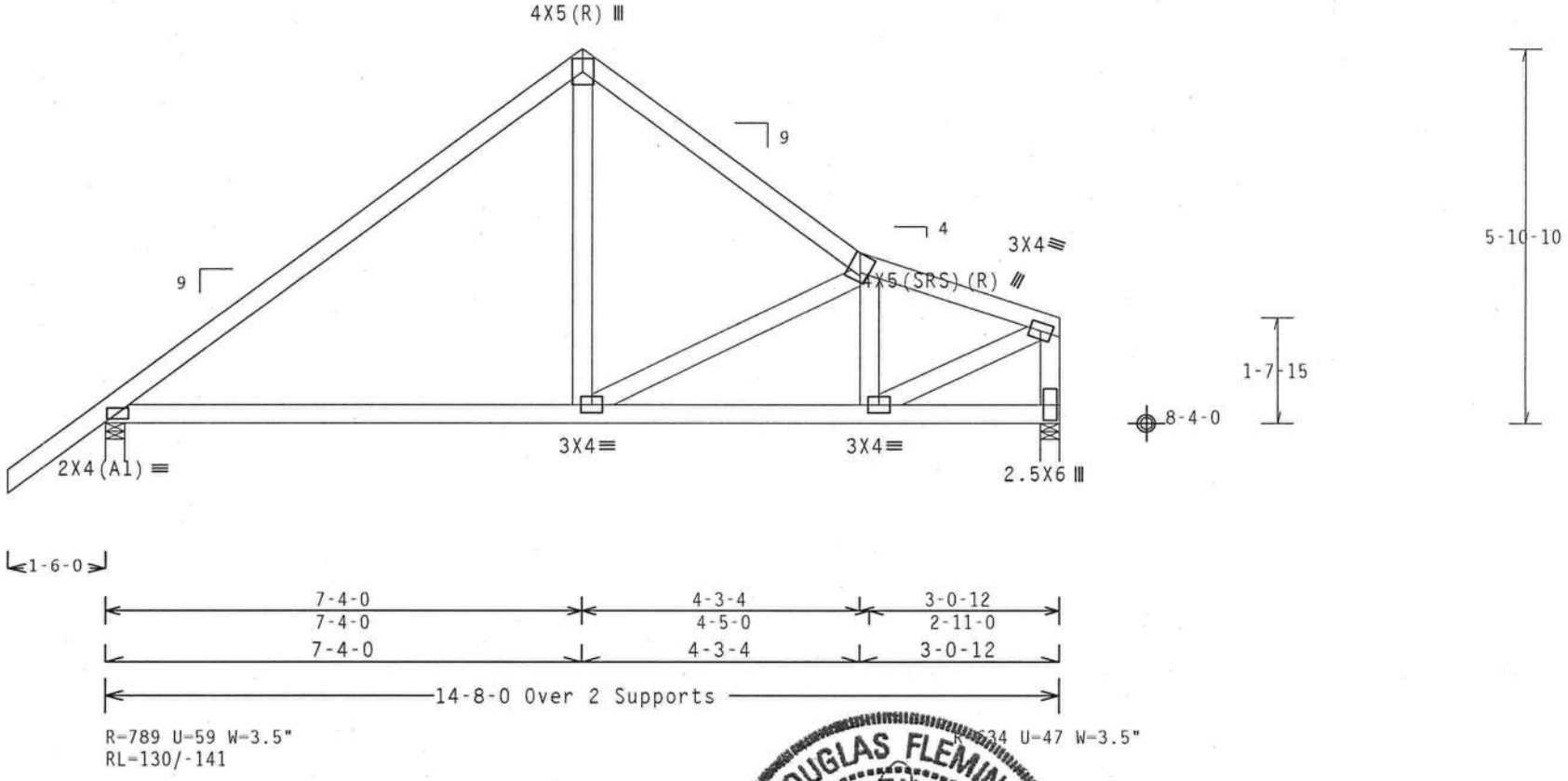

Design Crit: FBC2007Res/TPI-2007(SPD)
FT/RT=10%(0%)/0(0) 9.05.03.0319.16 QTY:6 FL/-/4/-/-/R/- Scale =.375"/Ft.

PLT TYP. Wave

ALPINE
ITW Building Components Group Inc.
Haines City, FL 33844
FL COA #0 278

WARNING TRUSSES REQUIRE EXTREME CARE IN FABRICATION, HANDLING, SHIPPING, INSTALLING AND BRACING. REFER TO BCSI (BUILDING COMPONENT SAFETY INFORMATION), PUBLISHED BY TPI (TRUSS PLATE INSTITUTE, 218 NORTH LEE STREET, SUITE 312, ALEXANDRIA, VA. 22314) AND WTCA (WOOD TRUSS COUNCIL OF AMERICA, 6300 ENTERPRISE LANE, MADISON, WI 53719) FOR SAFETY PRACTICES PRIOR TO PERFORMING THESE FUNCTIONS. UNLESS OTHERWISE INDICATED TOP CHORD SHALL HAVE PROPERLY ATTACHED STRUCTURAL PANELS AND BOTTOM CHORD SHALL HAVE A PROPERLY ATTACHED RIGID CEILING.

IMPORTANTFURNISH A COPY OF THIS DESIGN TO THE INSTALLATION CONTRACTOR. ITW BCG, INC. SHALL NOT BE RESPONSIBLE FOR ANY DEVIATION FROM THIS DESIGN; ANY FAILURE TO BUILD THE TRUSS IN CONFORMANCE WITH TPI; OR FABRICATING, HANDLING, SHIPPING, INSTALLING & BRACING OF TRUSSES. DESIGN CONFORMS WITH APPLICABLE PROVISIONS OF NDS (NATIONAL DESIGN SPEC, BY AF&PA) AND TPI. CONNECTOR PLATES ARE MADE OF 20/18/16GA (W,H/SS/K) ASTM A653 GRADE 40/60 (W, K/H,SS) GALV. STEEL. APPLY PLATES TO EACH FACE OF TRUSS AND, UNLESS OTHERWISE LOCATED ON THIS DESIGN, POSITION PER DRAWINGS. ANY INSPECTION OF PLATES FOLLOWED BY (1) SHALL BE PER ANNEX A3 OF TPI1-2002 SEC.3. A SEAL ON THIS DRAWING INDICATES ACCEPTANCE OF PROFESSIONAL ENGINEERING RESPONSIBILITY SOLELY FOR THE TRUSS COMPONENT DESIGN SHOWN. THE SUITABILITY AND USE OF THIS COMPONENT FOR ANY BUILDING IS THE RESPONSIBILITY OF THE BUILDING DESIGNER PER ANSI/TPI 1 SEC. 2.

DOUGLAS FLEMING LICENSE No. 66648 STATE OF FLORIDA PROFESSIONAL ENGINEER

02/24/2011

TC LL	20.0 PSF	REF	R487-- 57020
TC DL	10.0 PSF	DATE	02/24/11
BC DL	10.0 PSF	DRW	HCUSR487 11055001
BC LL	0.0 PSF	HC-ENG	DF/DF
TOT.LD.	40.0 PSF	SEQN-	184563
DUR.FAC.	1.25		
SPACING	24.0"	JREF-	1U9Q487_Z01

THIS DWG PREPARED FROM COMPUTER INPUT (LOADS & DIMENSIONS) SUBMITTED BY TRUSS MFR.

(11-036--Fill in later AARON NICKELSON/SCHNEIDER -- , ** - C)

Top chord 2x4 SP #2 Dense
Bot chord 2x4 SP #2 Dense
Webs 2x4 SP #3

Roof overhang supports 2.00 psf soffit load.

Bottom chord checked for 10.00 psf non-concurrent live load.

110 mph wind, 15.00 ft mean hgt, ASCE 7-05, OPEN_CLEAR bldg, Located anywhere in roof, CAT II, EXP C, wind TC DL=5.0 psf, wind BC DL=5.0 psf. Iw=1.00 GCpi(+/-)=0.00

Wind reactions based on MWFRS pressures.

Deflection meets L/240 live and L/180 total load.

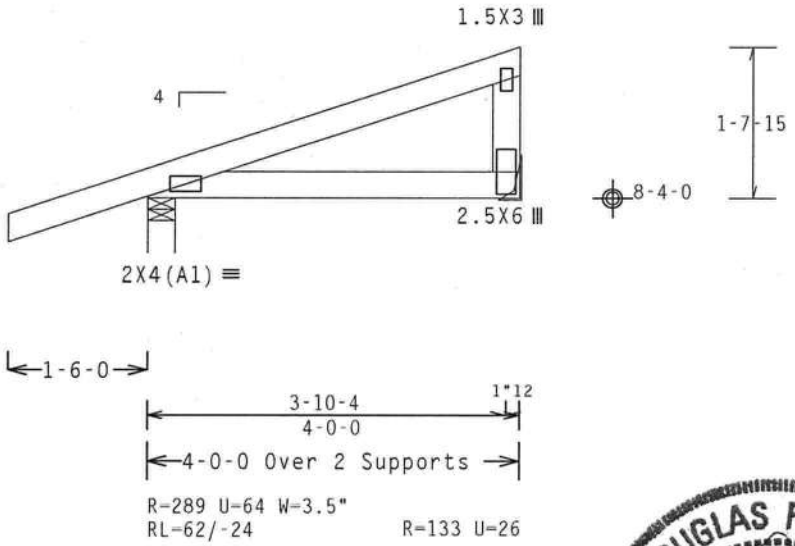

Design Crit: FBC2007Res/TPI-2002(STD)

PLT TYP. Wave FT/RT=10%(0%)/0(0) 1.05/03.0319.16 QTY:15 FL/-/4/-/-/R/- Scale =.5"/Ft.

ALPINE
ITW Building Components Group Inc.
Haines City, FL 33844
FL COA #0 278

WARNING TRUSSES REQUIRE EXTREME CARE IN FABRICATION, HANDLING, SHIPPING, INSTALLING AND BRACING. REFER TO BCSI (BUILDING COMPONENT SAFETY INFORMATION), PUBLISHED BY TPI (TRUSS PLATE INSTITUTE, 218 NORTH LEE STREET, SUITE 312, ALEXANDRIA, VA, 22314) AND WTCA (WOOD TRUSS COUNCIL OF AMERICA, 6300 ENTERPRISE LANE, MADISON, WI 53719) FOR SAFETY PRACTICES PRIOR TO PERFORMING THESE FUNCTIONS. UNLESS OTHERWISE INDICATED TOP CHORD SHALL HAVE PROPERLY ATTACHED STRUCTURAL PANELS AND BOTTOM CHORD SHALL HAVE A PROPERLY ATTACHED RIGID CEILING.

IMPORTANTFURNISH A COPY OF THIS DESIGN TO THE INSTALLATION CONTRACTOR. ITW BCG, INC. SHALL NOT BE RESPONSIBLE FOR ANY DEVIATION FROM THIS DESIGN; ANY FAILURE TO BUILD THE TRUSS IN CONFORMANCE WITH TPI; OR FABRICATING, HANDLING, SHIPPING, INSTALLING & BRACING OF TRUSSES. DESIGN CONFORMS WITH APPLICABLE PROVISIONS OF NDS (NATIONAL DESIGN SPEC. BY AF&PA) AND TPI. TRUSS CONNECTOR PLATES ARE MADE OF 20/18/16GA (W,H/SS/K) ASTM A653 GRADE 40/60 (W, K/H,SS) GALV. STEEL. APPLY PLATES TO EACH FACE OF TRUSS AND, UNLESS OTHERWISE LOCATED ON THIS DESIGN, POSITION PER DRAWINGS. FOR ANY INSPECTION OF PLATES FOLLOWED BY (1) SHALL BE PER ANNEX A3 OF TPI1-2002 SEC.3. A SEAL ON THIS DRAWING INDICATES ACCEPTANCE OF PROFESSIONAL ENGINEERING RESPONSIBILITY SOLELY FOR THE TRUSS COMPONENT DESIGN SHOWN. THE SUITABILITY AND USE OF THIS COMPONENT FOR ANY BUILDING IS THE RESPONSIBILITY OF THE BUILDING DESIGNER PER ANSI/TPI 1 SEC. 2.

DOUGLAS FLEMING LICENSE No. 66648 STATE OF FLORIDA PROFESSIONAL ENGINEER

02/24/2011

TC LL	20.0 PSF	REF	R487-- 57021
TC DL	10.0 PSF	DATE	02/24/11
BC DL	10.0 PSF	DRW	HCUSR487 11055002
BC LL	0.0 PSF	HC-ENG	DF/DF *
TOT.LD.	40.0 PSF	SEQN-	184569
DUR.FAC.	1.25		
SPACING	24.0"	JREF-	1U9Q487_Z01

(11-036--Fill in later AARON NICKELSON/SCHNEIDER -- , ** - CGE)

Top chord 2x4 SP #1
Bot chord 2x4 SP #2 Dense
Webs 2x4 SP #3
:Stack Chord SC1 2x4 SP #2 Dense:

Roof overhang supports 2.00 psf soffit load.

See DWGS A11015050109 & GBLLETIN0109 for more requirements.

Stacked top chord must NOT be notched or cut in area (NNL). Attach stacked top chord (SC) to dropped top chord in notchable area using 3x4 tie-plates 24" o.c. Center plate on stacked/dropped chord interface, plate length perpendicular to chord length. Splice top chord in notchable area using 3x6.

110 mph wind, 15.00 ft mean hgt, ASCE 7-05, CLOSED bldg, Located anywhere in roof, CAT II, EXP B, wind TC DL=5.0 psf, wind BC DL=5.0 psf. Iw=1.00 GCpi(+/-)=0.18

Wind reactions based on MWFRS pressures.

Truss spaced at 24.0" OC designed to support 0-6-0 top chord outlookers. Cladding load shall not exceed 10.00 PSF. Top chord must not be cut or notched.

Bottom chord checked for 10.00 psf non-concurrent live load.

Deflection meets L/240 live and L/180 total load.

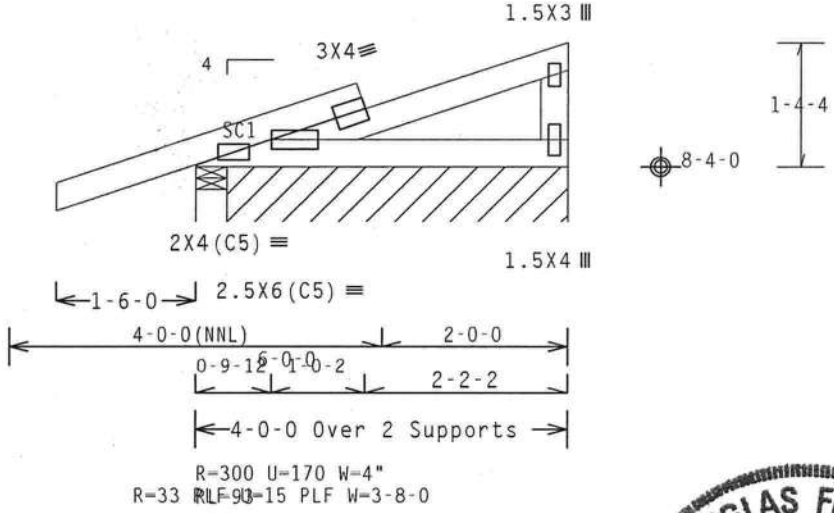

Design Crit: FBC2007Res/TPI-2002(STD) 9.05.03.0319.16
FT/RT=10%(0%)/0(0)

PLT TYP. Wave QTY:1 FL/-/4/-/-/R/- Scale =.5"/Ft.

ALPINE
ITW Building Components Group Inc.
Haines City, FL 33844
FL COA #0 278

WARNING TRUSSES REQUIRE EXTREME CARE IN FABRICATION, HANDLING, SHIPPING, INSTALLING AND BRACING. REFER TO BCSI (BUILDING COMPONENT SAFETY INFORMATION), PUBLISHED BY TPI (TRUSS PLATE INSTITUTE, 218 NORTH LEE STREET, SUITE 312, ALEXANDRIA, VA, 22314) AND WTCA (WOOD TRUSS COUNCIL OF AMERICA, 6300 ENTERPRISE LANE, MADISON, WI 53719) FOR SAFETY PRACTICES PRIOR TO PERFORMING THESE FUNCTIONS. UNLESS OTHERWISE INDICATED TOP CHORD SHALL HAVE PROPERLY ATTACHED STRUCTURAL PANELS AND BOTTOM CHORD SHALL HAVE A PROPERLY ATTACHED RIGID CEILING.

IMPORTANTFURNISH A COPY OF THIS DESIGN TO THE INSTALLATION CONTRACTOR. ITW BCG INC. SHALL NOT BE RESPONSIBLE FOR ANY DEVIATION FROM THIS DESIGN; ANY FAILURE TO BUILD THE TRUSS IN COMPLIANCE WITH TPI; OR FABRICATING, HANDLING, SHIPPING, INSTALLING & BRACING OF TRUSSES. DESIGN CONFORMS WITH APPLICABLE PROVISIONS OF NDS (NATIONAL DESIGN SPEC. BY AF&PA) AND TPI. ITW BCG CONNECTOR PLATES ARE MADE OF 20/18/16GA (W,H/SS/K) ASTM A653 GRADE 40/60 (W, K/H,SS) GALV. PLATES TO EACH FACE OF TRUSS AND, UNLESS OTHERWISE LOCATED ON THIS DESIGN, POSITION PER DRAWINGS. ANY INSPECTION OF PLATES FOLLOWED BY (1) SHALL BE PER ANNEX A3 OF TPI1-2002 SEC.3. A SEAL ON THIS DRAWING INDICATES ACCEPTANCE OF PROFESSIONAL ENGINEERING RESPONSIBILITY SOLELY FOR THE TRUSS COMPONENT DESIGN SHOWN. THE SUITABILITY AND USE OF THIS COMPONENT FOR ANY BUILDING IS THE RESPONSIBILITY OF THE BUILDING DESIGNER PER ANSI/TPI 1 SEC. 2.

DOUGLAS FLEMING LICENSE No. 66648 STATE OF FLORIDA PROFESSIONAL ENGINEER
02/24/2011

TC LL	20.0 PSF	REF	R487-- 57022
TC DL	10.0 PSF	DATE	02/24/11
BC DL	10.0 PSF	DRW	HCUSR487 11055013
BC LL	0.0 PSF	HC-ENG	DF/DF
TOT.LD.	40.0 PSF	SEQN-	184566
DUR.FAC.	1.25		
SPACING	24.0"	JREF-	1U9Q487_Z01

(11-036--Fill in later AARON NICKELSON/SCHNEIDER -- , ** - C1)

Top chord 2x4 SP #2 Dense
Bot chord 2x4 SP #2 Dense
Webs 2x4 SP #3

Roof overhang supports 2.00 psf soffit load.

Bottom chord checked for 10.00 psf non-concurrent live load.

All wind load cases on this truss have a 1.33 duration factor.

110 mph wind, 15.00 ft mean hgt, ASCE 7-05, CLOSED bldg, Located anywhere in roof, CAT II, EXP C, wind TC DL=5.0 psf, wind BC DL=5.0 psf. Iw=1.00 GCpi(+/-)=0.18

Wind reactions based on MWFRS pressures.

Deflection meets L/240 live and L/180 total load.

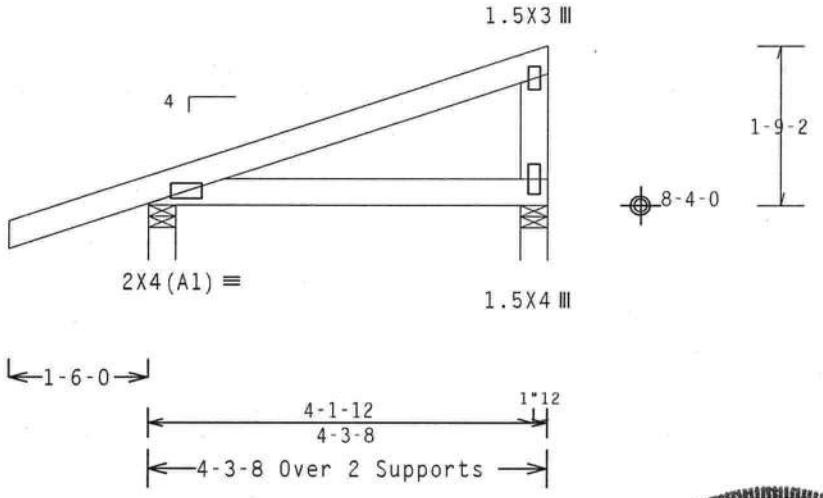

Design Crit: FBC2007Res/TPI-2002(SPD)

PLT TYP. Wave FT/RT=10%(0%)/0(0) 9.05/03.0319.16 QTY:5 FL/-/4/-/-/R/- Scale =.5"/Ft.

ALPINE
ITW Building Components Group Inc.
Haines City, FL 33844
FL COA #0 278

WARNING TRUSSES REQUIRE EXTREME CARE IN FABRICATION, HANDLING, SHIPPING, INSTALLING AND BRACING. REFER TO BCSI (BUILDING COMPONENT SAFETY INFORMATION), PUBLISHED BY TPI (TRUSS PLATE INSTITUTE, 218 NORTH LEE STREET, SUITE 312, ALEXANDRIA, VA. 22314) AND WTCA (WOOD TRUSS COUNCIL OF AMERICA, 6300 ENTERPRISE LANE, MADISON, WI 53719) FOR SAFETY PRACTICES PRIOR TO PERFORMING THESE FUNCTIONS. UNLESS OTHERWISE INDICATED TOP CHORD SHALL HAVE PROPERLY ATTACHED STRUCTURAL PANELS AND BOTTOM CHORD SHALL HAVE A PROPERLY ATTACHED RIGID CEILING.

IMPORTANTFURNISH A COPY OF THIS DESIGN TO THE INSTALLATION CONTRACTOR. ITW BCG, INC. SHALL NOT BE RESPONSIBLE FOR ANY DEVIATION FROM THIS DESIGN; ANY FAILURE TO BUILD THE TRUSS IN CONFORMANCE WITH TPI; OR FABRICATING, HANDLING, SHIPPING, INSTALLING & BRACING OF TRUSSES.
DESIGN CONFORMS WITH APPLICABLE PROVISIONS OF NDS (NATIONAL DESIGN SPEC, BY AF&PA) AND TPI. CONNECTOR PLATES ARE MADE OF 20/18/16GA (W,H/SS/K) ASTM A653 GRADE 40/60 (W, K/H,SS) GALV. STEEL. APPLY PLATES TO EACH FACE OF TRUSS AND, UNLESS OTHERWISE LOCATED ON THIS DESIGN, POSITION PER DRAWINGS AND/OR ANY INSPECTION OF PLATES FOLLOWED BY (1) SHALL BE PER ANNEX A3 OF TPI1-2002 SEC.3. A SEAL ON THIS DRAWING INDICATES ACCEPTANCE OF PROFESSIONAL ENGINEERING RESPONSIBILITY SOLELY FOR THE TRUSS COMPONENT DESIGN SHOWN. THE SUITABILITY AND USE OF THIS COMPONENT FOR ANY BUILDING IS THE RESPONSIBILITY OF THE BUILDING DESIGNER PER ANSI/TPI 1 SEC. 2.

DOUGLAS FLEMING LICENSE No. 66648 STATE OF FLORIDA PROFESSIONAL ENGINEER
02/24/2011

TC LL	20.0 PSF	REF	R487-- 57023
TC DL	10.0 PSF	DATE	02/24/11
BC DL	10.0 PSF	DRW	HCUSR487 11055003
BC LL	0.0 PSF	HC-ENG	DF/DF *
TOT.LD.	40.0 PSF	SEQN-	184572
DUR.FAC.	1.15		
SPACING	24.0"	JREF-	1U9Q487_Z01

(11-036--Fill in later AARON NICKELSON/SCHNEIDER -- , ** - DGE)

Top chord 2x4 SP #2 Dense
Bot chord 2x4 SP #2 Dense
Webs 2x4 SP #3
:Stack Chord SC1 2x4 SP #2 Dense::Stack Chord SC2 2x4 SP #2 Dense:

Roof overhang supports 2.00 psf soffit load.

See DWGS A11030050109 & GBLLETIN0109 for more requirements.

Stacked top chord must NOT be notched or cut in area (NNL). Dropped top chord braced at 24" o.c. intervals. Attach stacked top chord (SC) to dropped top chord in notchable area using 3x4 tie-plates 24" o.c. Center plate on stacked/dropped chord interface, plate length perpendicular to chord length. Splice top chord in notchable area using 3x6.

110 mph wind, 20.79 ft mean hgt, ASCE 7-05, CLOSED bldg, Located anywhere in roof, CAT II, EXP B, wind TC DL=5.0 psf, wind BC DL=5.0 psf. Iw=1.00 GCpi(+/-)=0.18

Wind reactions based on MWFRS pressures.

Truss spaced at 24.0" OC designed to support 0-6-0 top chord outlookers. Cladding load shall not exceed 10.00 PSF. Top chord must not be cut or notched.

Bottom chord checked for 10.00 psf non-concurrent live load.

Deflection meets L/240 live and L/180 total load.

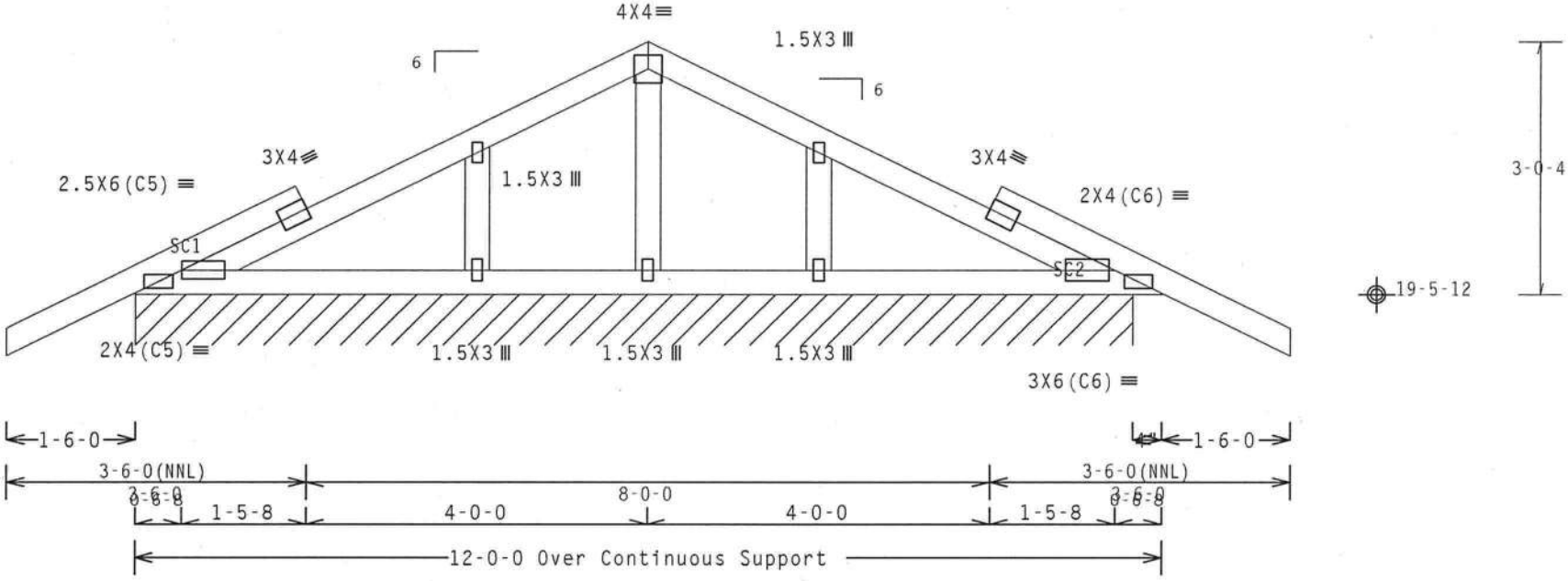

R=102 PLF U=19 PLF W=11-8-0
RL=8/-8 PLF

Design Crit: FBC2007Res/TPI-2002(STD) FT/RT=10%(0%)/0(0) 09.05.03.0319.16

PLT TYP. Wave QTY:1 FL/-/4/-/-/R/- Scale =.5"/Ft.

ALPINE
ITW Building Components Group Inc.
Haines City, FL 33844
FL COA #0 278

WARNING TRUSSES REQUIRE EXTREME CARE IN FABRICATION, HANDLING, SHIPPING, INSTALLING AND BRACING. REFER TO BCSI (BUILDING COMPONENT SAFETY INFORMATION), PUBLISHED BY TPI (TRUSS PLATE INSTITUTE, 218 NORTH LEE STREET, SUITE 312, ALEXANDRIA, VA. 22314) AND WTCA (WOOD TRUSS COUNCIL OF AMERICA, 6300 ENTERPRISE LANE, MADISON, WI 53719) FOR SAFETY PRACTICES PRIOR TO PERFORMING THESE FUNCTIONS. UNLESS OTHERWISE INDICATED TOP CHORD SHALL HAVE PROPERLY ATTACHED STRUCTURAL PANELS AND BOTTOM CHORD SHALL HAVE A PROPERLY ATTACHED RIGID CEILING.

IMPORTANTFURNISH A COPY OF THIS DESIGN TO THE INSTALLATION CONTRACTOR. ITW BCG, INC. SHALL NOT BE RESPONSIBLE FOR ANY DEVIATION FROM THIS DESIGN; ANY FAILURE TO BUILD THE TRUSS IN COMPLIANCE WITH TPI; OR FABRICATING, HANDLING, SHIPPING, INSTALLING & BRACING OF TRUSSES.
DESIGN CONFORMS WITH APPLICABLE PROVISIONS OF NDS (NATIONAL DESIGN SPEC. BY AF&PA) AND TPI. ITW BCG CONNECTOR PLATES ARE MADE OF 20/18/16GA (W,H/SS/K) ASTM A653 GRADE 40/60 (H, K/H,SS) GALV. SEE TPI PLATES TO EACH FACE OF TRUSS AND, UNLESS OTHERWISE LOCATED ON THIS DESIGN, POSITION PER DRAWINGS. FOR ANY INSPECTION OF PLATES FOLLOWED BY (1) SHALL BE PER ANNEX A3 OF TPI1-2002 SEC.3. A SEALED DRAWING INDICATES ACCEPTANCE OF PROFESSIONAL ENGINEERING RESPONSIBILITY SOLELY FOR THE TRUSS COMPONENT DESIGN SHOWN. THE SUITABILITY AND USE OF THIS COMPONENT FOR ANY BUILDING IS THE RESPONSIBILITY OF THE BUILDING DESIGNER PER ANSI/TPI 1 SEC. 2.

DOUGLAS FLEMING LICENSE No. 66648 STATE OF FLORIDA PROFESSIONAL ENGINEER
02/24/2011

TC LL	20.0 PSF	REF	R487-- 57024
TC DL	10.0 PSF	DATE	02/24/11
BC DL	10.0 PSF	DRW	HCUSR487 11055014
BC LL	0.0 PSF	HC-ENG	DF/DF
TOT.LD.	40.0 PSF	SEQN-	184559
DUR.FAC.	1.25		
SPACING	24.0"	JREF-	1U9Q487_Z01

THIS DWG PREPARED FROM COMPUTER INPUT (LOADS & DIMENSIONS) SUBMITTED BY TRUSS MFR.

(11-036--Fill in later AARON NICKELSON/SCHNEIDER -- , ** - D)

Top chord 2x4 SP #2 Dense
Bot chord 2x4 SP #2 Dense
Webs 2x4 SP #3

Roof overhang supports 2.00 psf soffit load.

Bottom chord checked for 10.00 psf non-concurrent live load.

110 mph wind, 20.95 ft mean hgt, ASCE 7-05, CLOSED bldg, Located anywhere in roof, CAT II, EXP B, wind TC DL=5.0 psf, wind BC DL=5.0 psf. Iw=1.00 GCpi(+/-)=0.18

Wind reactions based on MWFRS pressures.

Deflection meets L/240 live and L/180 total load.

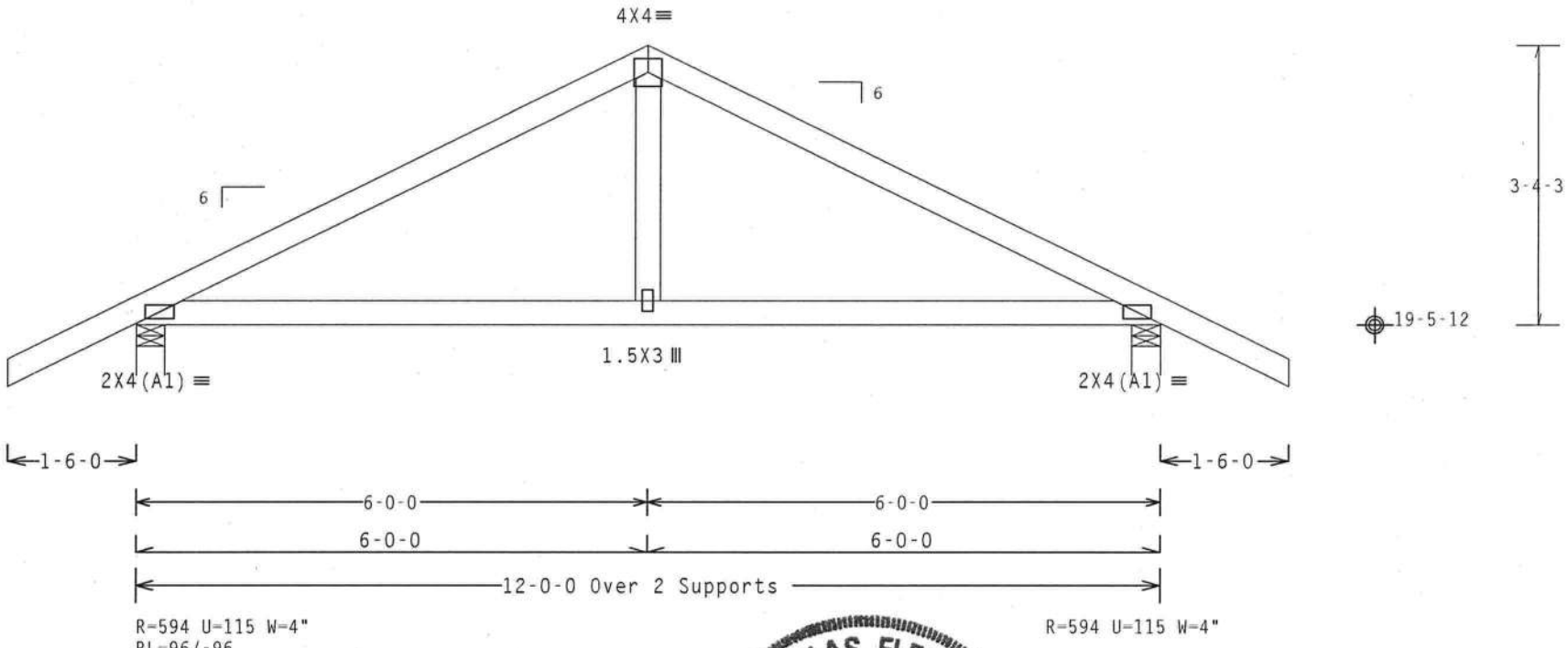

Design Crit: FBC2007Res/TPI-2002(STD) FT/RT=10%(0%)/0(0) 19.05/03.0319.16

PLT TYP. Wave QTY:4 FL/-/4/-/-/R/- Scale =.5"/Ft.

ALPINE
ITW Building Components Group Inc.
Haines City, FL 33844
FL COA #0 278

WARNING TRUSSES REQUIRE EXTREME CARE IN FABRICATION, HANDLING, SHIPPING, INSTALLING AND BRACING. REFER TO BCSI (BUILDING COMPONENT SAFETY INFORMATION), PUBLISHED BY TPI (TRUSS PLATE INSTITUTE, 218 NORTH LEE STREET, SUITE 312, ALEXANDRIA, VA. 22314) AND WTCA (WOOD TRUSS COUNCIL OF AMERICA, 6300 ENTERPRISE LANE, MADISON, WI 53719) FOR SAFETY PRACTICES PRIOR TO PERFORMING THESE FUNCTIONS. UNLESS OTHERWISE INDICATED TOP CHORD SHALL HAVE PROPERLY ATTACHED STRUCTURAL PANELS AND BOTTOM CHORD SHALL HAVE A PROPERLY ATTACHED RIGID CEILING.

IMPORTANTFURNISH A COPY OF THIS DESIGN TO THE INSTALLATION CONTRACTOR. ITW BCG, INC. SHALL NOT BE RESPONSIBLE FOR ANY DEVIATION FROM THIS DESIGN; ANY FAILURE TO BUILD THE TRUSS IN COMPLIANCE WITH TPI; OR FABRICATING, HANDLING, SHIPPING, INSTALLING & BRACING OF TRUSSES. DESIGN CONFORMS WITH APPLICABLE PROVISIONS OF NDS (NATIONAL DESIGN SPEC. BY AF&PA) AND TPI. ITW BCG CONNECTOR PLATES ARE MADE OF 20/18/16GA (W,H/SS/K) ASTM A653 GRADE 40/60 (W, K/H,SS) GALV. STEEL. PLACE PLATES TO EACH FACE OF TRUSS AND, UNLESS OTHERWISE LOCATED ON THIS DESIGN, POSITION PER DRAWINGS. ANY INSPECTION OF PLATES FOLLOWED BY (1) SHALL BE PER ANNEX A3 OF TPI1-2002 SEC.3. A SEALED DRAWING INDICATES ACCEPTANCE OF PROFESSIONAL ENGINEERING RESPONSIBILITY SOLELY FOR THE TRUSS COMPONENT DESIGN SHOWN. THE SUITABILITY AND USE OF THIS COMPONENT FOR ANY BUILDING IS THE RESPONSIBILITY OF THE BUILDING DESIGNER PER ANSI/TPI 1 SEC. 2.

DOUGLAS FLEMING LICENSE No. 66648 STATE OF FLORIDA PROFESSIONAL ENGINEER

02/24/2011

TC LL	20.0 PSF	REF	R487-- 57025
TC DL	10.0 PSF	DATE	02/24/11
BC DL	10.0 PSF	DRW	HCUSR487 11055004
BC LL	0.0 PSF	HC-ENG	DF/DF *
TOT.LD.	40.0 PSF	SEQN-	184556
DUR.FAC.	1.25		
SPACING	24.0"	JREF-	1U9Q487_Z01

(11-036--Fill in later AARON NICKELSON/SCHNEIDER -- , ** - F)

THIS DWG PREPARED FROM COMPUTER INPUT (LOADS & DIMENSIONS) SUBMITTED BY TRUSS MFR.

Top chord 2x4 SP #2 Dense
Bot chord 2x4 SP #2 Dense
Webs 2x4 SP #3

Bottom chord checked for 10.00 psf non-concurrent live load.

Deflection meets L/360 live and L/360 total load. Creep increase factor for dead load is 1.50.

Truss must be installed as shown with top chord up.

(H1) - (J) Hanger not calculated (3)2x4 SP #2 Dense supporting member.
(H2) - (J) Hanger not calculated (3)2x6 SP #1 Dense supporting member.
(H3) - (J) Hanger not calculated (3)2x4 SP #1 supporting member.
(H4) - (J) Hanger not calculated (3)2x4 SP #2 Dense supporting member.
(H5) - (J) Hanger not calculated (3)2x4 SP #1 supporting member.

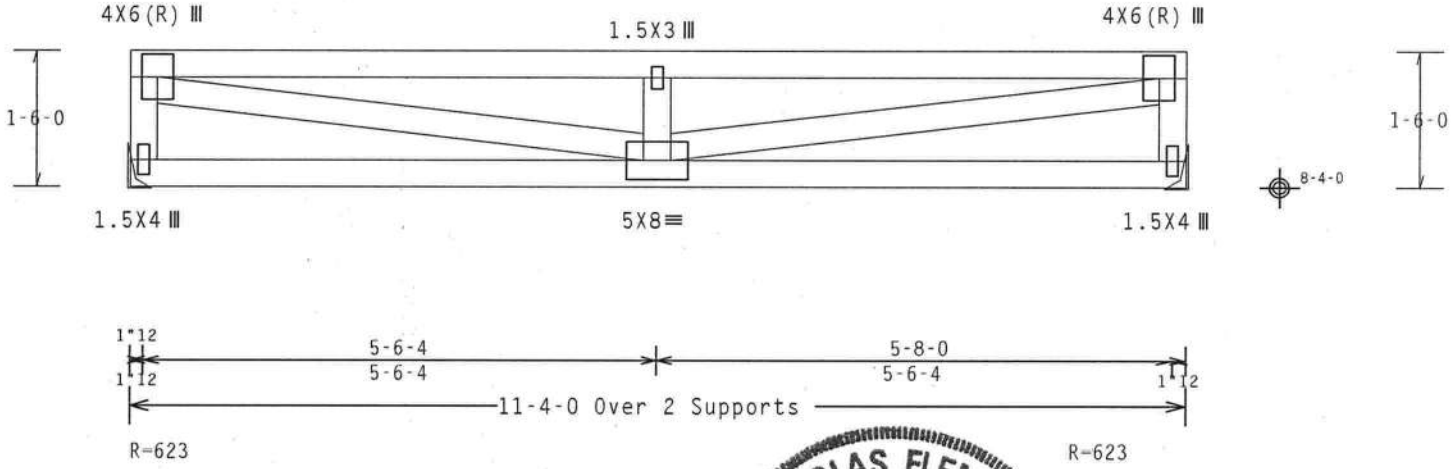

Design Crit: FBC2007Res/TPI-2007(SPD) 4.05.03.0313.16 TY:11 FL/-/4/-/-/R/-

PLT TYP. Wave

Scale =.5"/Ft.

ALPINE
ITW Building Components Group Inc.
Haines City, FL 33844
FL COA #0 278

WARNING TRUSSES REQUIRE EXTREME CARE IN FABRICATION, HANDLING, SHIPPING, INSTALLING AND BRACING. REFER TO BCSI (BUILDING COMPONENT SAFETY INFORMATION), PUBLISHED BY TPI (TRUSS PLATE INSTITUTE, 218 NORTH LEE STREET, SUITE 312, ALEXANDRIA, VA. 22314) AND WTCA (WOOD TRUSS COUNCIL OF AMERICA, 6300 ENTERPRISE LANE, MADISON, WI 53719) FOR SAFETY PRACTICES PRIOR TO PERFORMING THESE FUNCTIONS. UNLESS OTHERWISE INDICATED TOP CHORD SHALL HAVE PROPERLY ATTACHED STRUCTURAL PANELS AND BOTTOM CHORD SHALL HAVE A PROPERLY ATTACHED RIGID CEILING.

IMPORTANTFURNISH A COPY OF THIS DESIGN TO THE INSTALLATION CONTRACTOR. ITW BCG, INC. SHALL NOT BE RESPONSIBLE FOR ANY DEVIATION FROM THIS DESIGN; ANY FAILURE TO BUILD THE TRUSS IN CONFORMANCE WITH TPI; OR FABRICATING, HANDLING, SHIPPING, INSTALLING & BRACING OF TRUSSES. DESIGN CONFORMS WITH APPLICABLE PROVISIONS OF NDS (NATIONAL DESIGN SPEC. BY AF&PA) AND TPI. CONNECTOR PLATES ARE MADE OF 20/18/16GA (W,H/SS/K) ASTM A653 GRADE 40/60 (W, K/H,SS) GALV. STEEL. APPLY PLATES TO EACH FACE OF TRUSS AND, UNLESS OTHERWISE LOCATED ON THIS DESIGN, POSITION PER DRAWINGS. ANY INSPECTION OF PLATES FOLLOWED BY (I) SHALL BE PER ANNEX A3 OF TPI1-2002 SEC.3. A SEAL ON THIS DRAWING INDICATES ACCEPTANCE OF PROFESSIONAL ENGINEERING RESPONSIBILITY SOLELY FOR THE TRUSS COMPONENT DESIGN SHOWN. THE SUITABILITY AND USE OF THIS COMPONENT FOR ANY BUILDING IS THE RESPONSIBILITY OF THE BUILDING DESIGNER PER ANSI/TPI 1 SEC. 2.

DOUGLAS FLEMING LICENSE No. 66648 STATE OF FLORIDA PROFESSIONAL ENGINEER

02/24/2011

TC LL	40.0 PSF	REF	R487-- 57026
TC DL	10.0 PSF	DATE	02/24/11
BC DL	5.0 PSF	DRW	HCUSR487 11055015
BC LL	0.0 PSF	HC-ENG	DF/DF
TOT.LD.	55.0 PSF	SEQN-	184530
DUR.FAC.	1.00		
SPACING	24.0"	JREF-	1U9Q487_Z01

THIS DWG PREPARED FROM COMPUTER INPUT (LOADS & DIMENSIONS) SUBMITTED BY TRUSS MFR.

(11-036--Fill in later AARON NICKELSON/SCHNEIDER -- , ** - FG)

Top chord 2x4 SP #2 Dense
Bot chord 2x4 SP #2 Dense
Webs 2x4 SP #3

Deflection meets L/360 live and L/360 total load.

The TC of this truss shall be braced with attached spans at 24" OC in lieu of structural sheathing.

Special loads
------(Lumber Dur.Fac.=1.00 / Plate Dur.Fac.=1.00)
TC- From 25 plf at 0.00 to 25 plf at 11.33
BC- From 2 plf at 0.00 to 2 plf at 11.33
BC- 158.18 lb Conc. Load at 1.73, 3.73
BC- 177.08 lb Conc. Load at 5.73, 7.73, 9.73

(H1) - (J) Hanger not calculated (3)2x4 SP #1 supporting member.
(H2) - (J) Hanger not calculated (3)2x4 SP #1 supporting member.

Truss must be installed as shown with top chord up.

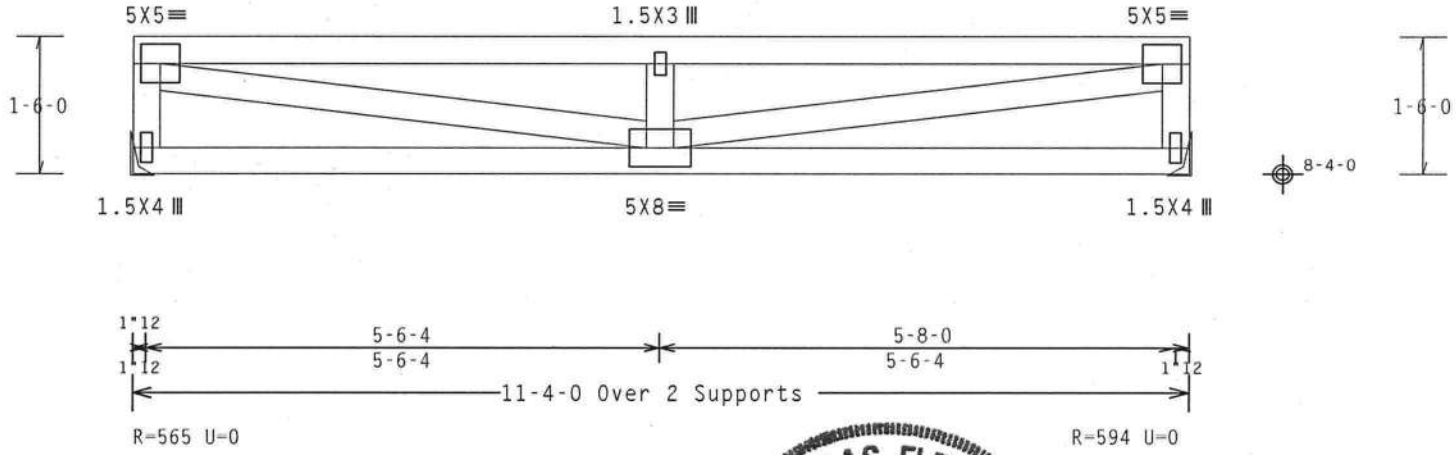

Design Crit: FBC2007Res/TPI-2002(SPIB) ... 9.05.03.0319.16 ... QTY:1 FL/-/4/-/-/R/-

PLT TYP. Wave

Scale =.5"/Ft.

ALPINE
ITW Building Components Group Inc.
Haines City, FL 33844
FL COA #0 278

WARNING TRUSSES REQUIRE EXTREME CARE IN FABRICATION, HANDLING, SHIPPING, INSTALLING AND BRACING. REFER TO BCSI (BUILDING COMPONENT SAFETY INFORMATION), PUBLISHED BY TPI (TRUSS PLATE INSTITUTE, 218 NORTH LEE STREET, SUITE 312, ALEXANDRIA, VA, 22314) AND WTCA (WOOD TRUSS COUNCIL OF AMERICA, 6300 ENTERPRISE LANE, MADISON, WI 53719) FOR SAFETY PRACTICES PRIOR TO PERFORMING THESE FUNCTIONS. UNLESS OTHERWISE INDICATED TOP CHORD SHALL HAVE PROPERLY ATTACHED STRUCTURAL PANELS AND BOTTOM CHORD SHALL HAVE A PROPERLY ATTACHED RIGID CEILING.

IMPORTANTFURNISH A COPY OF THIS DESIGN TO THE INSTALLATION CONTRACTOR. ITW BCG, INC. SHALL NOT BE RESPONSIBLE FOR ANY DEVIATION FROM THIS DESIGN; ANY FAILURE TO BUILD THE TRUSS IN CONFORMANCE WITH TPI; OR FABRICATING, HANDLING, SHIPPING, INSTALLING & BRACING OF TRUSSES.
DESIGN CONFORMS WITH APPLICABLE PROVISIONS OF NDS (NATIONAL DESIGN SPEC. BY AF&PA) AND TPI. THIS DESIGN CONNECTOR PLATES ARE MADE OF 20/18/16GA (W,H/SS/K) ASTM A653 GRADE 40/60 (W, K/H,SS) GALV. STEEL. ONLY PLATES TO EACH FACE OF TRUSS AND, UNLESS OTHERWISE LOCATED ON THIS DESIGN, POSITION PER DRAWING. ANY INSPECTION OF PLATES FOLLOWED BY (1) SHALL BE PER ANNEX A3 OF TPI1-2002 SEC.3. A SEALED TRUSS DRAWING INDICATES ACCEPTANCE OF PROFESSIONAL ENGINEERING RESPONSIBILITY SOLELY FOR THE TRUSS COMPONENT DESIGN SHOWN. THE SUITABILITY AND USE OF THIS COMPONENT FOR ANY BUILDING IS THE RESPONSIBILITY OF THE BUILDING DESIGNER PER ANSI/TPI 1 SEC. 2.

DOUGLAS FLEMING LICENSE No. 66648 STATE OF FLORIDA PROFESSIONAL ENGINEER
02/24/2011

TC LL	40.0 PSF	REF	R487-- 57027
TC DL	10.0 PSF	DATE	02/24/11
BC DL	5.0 PSF	DRW	HCUSR487 11055016
BC LL	0.0 PSF	HC-ENG	DF/DF
TOT.LD.	55.0 PSF	SEQN-	184533
DUR.FAC.	1.00		
SPACING	24.0"	JREF-	1U9Q487_Z01

(11-036--Fill in later AARON NICKELSON/SCHNEIDER -- , ** - FGE)

Top chord 2x4 SP #1
Bot chord 2x4 SP #2 Dense
Webs 2x4 SP #3

Bottom chord checked for 10.00 psf non-concurrent live load.

Provide for complete drainage of roof.

Truss spaced at 24.0" OC designed to support 0-6-0 top chord outlookers. Cladding load shall not exceed 10.00 PSF. Top chord must not be cut or notched.

Deflection meets L/360 live and L/360 total load.

Truss must be installed as shown with top chord up.

** Wall girder loading on this truss. **

Fasten rated sheathing to one face of this frame.

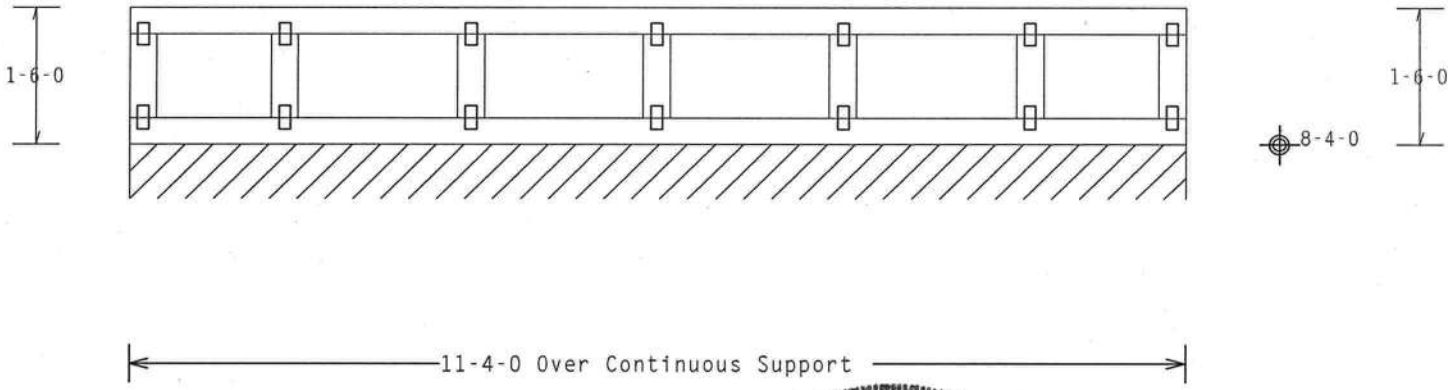

R=551 PLF W=11-4-0

Note: All Plates Are 1.5X3 Except As Shown.

Design Crit: FBC2007Res/TPI-2002(SPD) 1.05.03.0319.16

PLT TYP. Wave FT/RT=10%(0%)/0(0) TY:1 FL/-/4/-/-/R/- Scale =.5"/Ft.

ALPINE
ITW Building Components Group Inc.
Haines City, FL 33844
FL COA #0 278

WARNING TRUSSES REQUIRE EXTREME CARE IN FABRICATION, HANDLING, SHIPPING, INSTALLING AND BRACING. REFER TO BCSI (BUILDING COMPONENT SAFETY INFORMATION), PUBLISHED BY TPI (TRUSS PLATE INSTITUTE, 218 NORTH LEE STREET, SUITE 312, ALEXANDRIA, VA, 22314) AND WTCA (WOOD TRUSS COUNCIL OF AMERICA, 6300 ENTERPRISE LANE, MADISON, WI 53719) FOR SAFETY PRACTICES PRIOR TO PERFORMING THESE FUNCTIONS. UNLESS OTHERWISE INDICATED TOP CHORD SHALL HAVE PROPERLY ATTACHED STRUCTURAL PANELS AND BOTTOM CHORD SHALL HAVE A PROPERLY ATTACHED RIGID CEILING.

IMPORTANTFURNISH A COPY OF THIS DESIGN TO THE INSTALLATION CONTRACTOR. ITW BCG, INC. SHALL NOT BE RESPONSIBLE FOR ANY DEVIATION FROM THIS DESIGN; ANY FAILURE TO BUILD THE TRUSS IN CONFORMANCE WITH TPI; OR FABRICATING, HANDLING, SHIPPING, INSTALLING & BRACING OF TRUSSES.
DESIGN CONFORMS WITH APPLICABLE PROVISIONS OF NDS (NATIONAL DESIGN SPEC. BY AF&PA) AND TPI. CONNECTOR PLATES ARE MADE OF 20/18/16GA (W,H/SS/K) ASTM A653 GRADE 40/60 (W, K/H,SS) GALV. STEEL AND APPLIED PLATES TO EACH FACE OF TRUSS AND, UNLESS OTHERWISE LOCATED ON THIS DESIGN, POSITION PER DRAWING. ANY INSPECTION OF PLATES FOLLOWED BY (1) SHALL BE PER ANNEX A3 OF TPI1-2002 SEC.3. A SEAL ON THIS DRAWING INDICATES ACCEPTANCE OF PROFESSIONAL ENGINEERING RESPONSIBILITY SOLELY FOR THE TRUSS COMPONENT DESIGN SHOWN. THE SUITABILITY AND USE OF THIS COMPONENT FOR ANY BUILDING IS THE RESPONSIBILITY OF THE BUILDING DESIGNER PER ANSI/TPI 1 SEC. 2.

DOUGLAS FLEMING LICENSE No. 66648 STATE OF FLORIDA PROFESSIONAL ENGINEER

02/24/2011

TC LL	40.0 PSF	REF	R487-- 57028
TC DL	10.0 PSF	DATE	02/24/11
BC DL	5.0 PSF	DRW	HCUSR487 11055017
BC LL	0.0 PSF	HC-ENG	DF/DF
TOT.LD.	55.0 PSF	SEQN-	184575
DUR.FAC.	1.00		
SPACING	24.0"	JREF-	1U9Q487_Z01

(11-036--Fill in later AARON NICKELSON/SCHNEIDER -- , ** - F1)

THIS DWG PREPARED FROM COMPUTER INPUT (LOADS & DIMENSIONS) SUBMITTED BY TRUSS MFR.

Top chord 2x4 SP #2 Dense
Bot chord 2x4 SP #2 Dense
Webs 2x4 SP #3

Bottom chord checked for 10.00 psf non-concurrent live load.

Truss must be installed as shown with top chord up.

(H1) - (J) Hanger not calculated (2)2x4 SP #1 supporting member.
(H2) - (J) Hanger not calculated (2)2x4 SP #2 Dense supporting member.

Deflection meets L/360 live and L/360 total load.

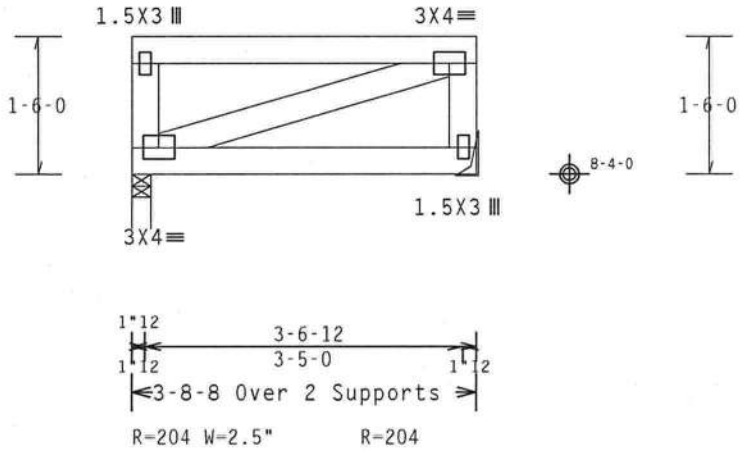

Design Crit: FBC2007Res/TPI-2002(SPID) 1.05/03.0319.16 TY:5 FL/-/4/-/-/R/-

PLT TYP. Wave FT/RT=10%(0%)/0(0) Scale =.5"/Ft.

ALPINE
ITW Building Components Group Inc.
Haines City, FL 33844
FL COA #0 278

WARNING TRUSSES REQUIRE EXTREME CARE IN FABRICATION, HANDLING, SHIPPING, INSTALLING AND BRACING. REFER TO BCSI (BUILDING COMPONENT SAFETY INFORMATION), PUBLISHED BY TPI (TRUSS PLATE INSTITUTE, 218 NORTH LEE STREET, SUITE 312, ALEXANDRIA, VA. 22314) AND WTCA (WOOD TRUSS COUNCIL OF AMERICA, 6300 ENTERPRISE LANE, MADISON, WI 53719) FOR SAFETY PRACTICES PRIOR TO PERFORMING THESE FUNCTIONS. UNLESS OTHERWISE INDICATED TOP CHORD SHALL HAVE PROPERLY ATTACHED STRUCTURAL PANELS AND BOTTOM CHORD SHALL HAVE A PROPERLY ATTACHED RIGID CEILING.

IMPORTANTFURNISH A COPY OF THIS DESIGN TO THE INSTALLATION CONTRACTOR. ITW BCG, INC. SHALL NOT BE RESPONSIBLE FOR ANY DEVIATION FROM THIS DESIGN; ANY FAILURE TO BUILD THE TRUSS IN CONFORMANCE WITH TPI; OR FABRICATING, HANDLING, SHIPPING, INSTALLING & BRACING OF TRUSSES.
DESIGN CONFORMS WITH APPLICABLE PROVISIONS OF NDS (NATIONAL DESIGN SPEC, BY AF&PA) AND TPI. CONNECTOR PLATES ARE MADE OF 20/18/16GA (W,H/SS/K) ASTM A653 GRADE 40/60 (W, K/H.SS) GALV. STEEL. APPLY PLATES TO EACH FACE OF TRUSS AND, UNLESS OTHERWISE LOCATED ON THIS DESIGN, POSITION PER DRAWINGS. ANY INSPECTION OF PLATES FOLLOWED BY (1) SHALL BE PER ANNEX A3 OF TPI1-2002 SEC.3. A SEAL ON THIS DRAWING INDICATES ACCEPTANCE OF PROFESSIONAL ENGINEERING RESPONSIBILITY SOLELY FOR THE TRUSS COMPONENT DESIGN SHOWN. THE SUITABILITY AND USE OF THIS COMPONENT FOR ANY BUILDING IS THE RESPONSIBILITY OF THE BUILDING DESIGNER PER ANSI/TPI 1 SEC. 2.

DOUGLAS FLEMING LICENSE No. 66648 STATE OF FLORIDA PROFESSIONAL ENGINEER

02/24/2011

TC LL	40.0 PSF	REF	R487-- 57029
TC DL	10.0 PSF	DATE	02/24/11
BC DL	5.0 PSF	DRW	HCUSR487 11055018
BC LL	0.0 PSF	HC-ENG	DF/DF
TOT.LD.	55.0 PSF	SEQN-	184516
DUR.FAC.	1.00		
SPACING	24.0"	JREF-	1U9Q487_Z01

THIS DWG PREPARED FROM COMPUTER INPUT (LOADS & DIMENSIONS) SUBMITTED BY TRUSS MFR.

(11-036--Fill in later AARON NICKELSON/SCHNEIDER -- , ** - F1G)

Top chord 2x4 SP #2 Dense
Bot chord 2x4 SP #2 Dense
Webs 2x4 SP #3

Special loads
------(Lumber Dur.Fac.=1.00 / Plate Dur.Fac.=1.00)
TC- From 100 plf at 0.00 to 100 plf at 3.71
BC- From 10 plf at 0.00 to 10 plf at 3.71
BC- 158.18 lb Conc. Load at 1.94

Deflection meets L/360 live and L/360 total load.

Truss must be installed as shown with top chord up.

The TC of this truss shall be braced with attached spans at 24" OC in lieu of structural sheathing.

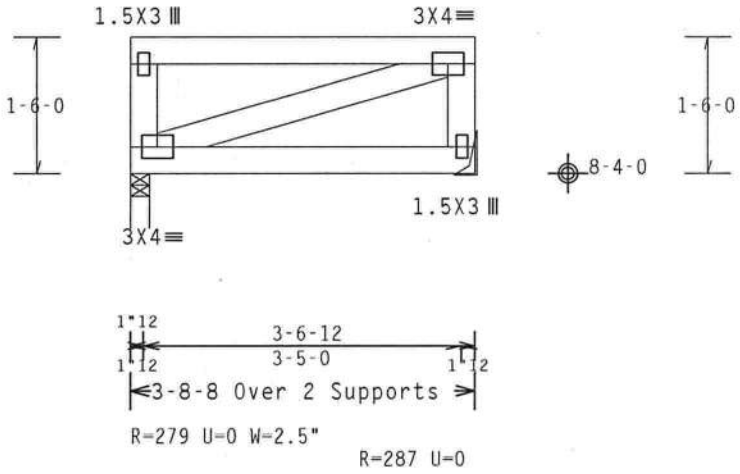

Design Crit: FBC2007Res/TPI-2002(STD) 09.05.03.0319.16 QTY:1 FL/-/4/-/-/R/-

PLT TYP. Wave FT/RT=10%(0%)/0(0) Scale =.5"/Ft.

ALPINE
ITW Building Components Group Inc.
Haines City, FL 33844
FL COA #0 278

WARNING TRUSSES REQUIRE EXTREME CARE IN FABRICATION, HANDLING, SHIPPING, INSTALLING AND BRACING. REFER TO BCSI (BUILDING COMPONENT SAFETY INFORMATION), PUBLISHED BY TPI (TRUSS PLATE INSTITUTE, 583 NORTH LEE STREET, SUITE 312, ALEXANDRIA, VA, 22314) AND WTCA (WOOD TRUSS COUNCIL OF AMERICA, 6300 ENTERPRISE LANE, MADISON, WI 53719) FOR SAFETY PRACTICES PRIOR TO PERFORMING THESE FUNCTIONS. UNLESS OTHERWISE INDICATED TOP CHORD SHALL HAVE PROPERLY ATTACHED STRUCTURAL PANELS AND BOTTOM CHORD SHALL HAVE A PROPERLY ATTACHED RIGID CEILING.

IMPORTANTFURNISH A COPY OF THIS DESIGN TO THE INSTALLATION CONTRACTOR. ITW BCG, INC. DOES NOT BE RESPONSIBLE FOR ANY DEVIATION FROM THIS DESIGN; ANY FAILURE TO BUILD THE TRUSS IN COMPLIANCE WITH TPI; OR FABRICATING, HANDLING, SHIPPING, INSTALLING & BRACING OF TRUSSES.
DESIGN CONFORMS WITH APPLICABLE PROVISIONS OF NDS (NATIONAL DESIGN SPEC, BY AF&PA) AND TPI. CONNECTOR PLATES ARE MADE OF 20/18/16GA (W,H/SS/K) ASTM A653 GRADE 40/60 (W, K/H,SS) GALV. STEEL. PLATES TO EACH FACE OF TRUSS AND, UNLESS OTHERWISE LOCATED ON THIS DESIGN, POSITION PER DRAWING. ANY INSPECTION OF PLATES FOLLOWED BY (1) SHALL BE PER ANNEX A3 OF TPI1-2002 SEC.3. A SEAL ON THIS DRAWING INDICATES ACCEPTANCE OF PROFESSIONAL ENGINEERING RESPONSIBILITY SOLELY FOR THE TRUSS COMPONENT DESIGN SHOWN. THE SUITABILITY AND USE OF THIS COMPONENT FOR ANY BUILDING IS THE RESPONSIBILITY OF THE BUILDING DESIGNER PER ANSI/TPI 1 SEC. 2.

DOUGLAS FLEMING LICENSE No. 66648 STATE OF FLORIDA PROFESSIONAL ENGINEER

02/24/2011

TC LL	40.0 PSF	REF	R487-- 57030
TC DL	10.0 PSF	DATE	02/24/11
BC DL	5.0 PSF	DRW	HCUSR487 11055019
BC LL	0.0 PSF	HC-ENG	DF/DF
TOT.LD.	55.0 PSF	SEQN-	184523
DUR.FAC.	1.00		
SPACING	24.0"	JREF-	1U9Q487_Z01

THIS DWG PREPARED FROM COMPUTER INPUT (LOADS & DIMENSIONS) SUBMITTED BY TRUSS MFR.

(11-036--Fill in later AARON NICKELSON/SCHNEIDER -- , ** - M)

Top chord 2x4 SP #2 Dense
Bot chord 2x4 SP #2 Dense
Webs 2x4 SP #3

End verticals not exposed to wind pressure.

Roof overhang supports 2.00 psf soffit load.

Deflection meets L/240 live and L/180 total load.

110 mph wind, 15.00 ft mean hgt, ASCE 7-05, CLOSED bldg, Located anywhere in roof, CAT II, EXP B, wind TC DL=5.0 psf, wind BC DL=5.0 psf. Iw=1.00 GCpi(+/-)=0.18

Wind reactions based on MWFRS pressures.

Bottom chord checked for 10.00 psf non-concurrent live load.

MWFRS loads based on trusses located at least 7.50 ft. from roof edge.

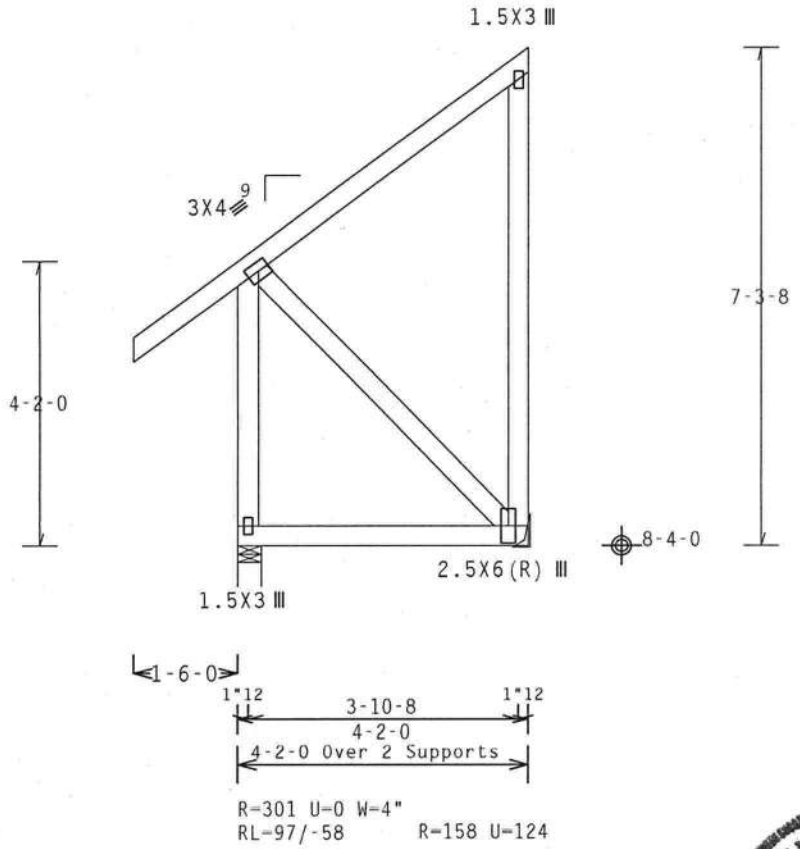

Design Crit: FBC2007Res/TPI-2002(STD) 09.05.03.0319.16% QTY:3 FL/-/4/-/-/R/-

PLT TYP. Wave FT/RT=10%(0%)/0(0) Scale =.375"/Ft.

ALPINE
ITW Building Components Group Inc.
Haines City, FL 33844
FL COA #0 278

WARNING TRUSSES REQUIRE EXTREME CARE IN FABRICATION, HANDLING, SHIPPING, INSTALLING AND BRACING. REFER TO BCSI (BUILDING COMPONENT SAFETY INFORMATION), PUBLISHED BY TPI (TRUSS PLATE INSTITUTE, 583 NORTH LEE STREET, SUITE 312, ALEXANDRIA, VA, 22314) AND WTCA (WOOD TRUSS COUNCIL OF AMERICA, 6300 ENTERPRISE LANE, MADISON, WI 53719) FOR SAFETY PRACTICES PRIOR TO PERFORMING THESE FUNCTIONS. UNLESS OTHERWISE INDICATED TOP CHORD SHALL HAVE PROPERLY ATTACHED STRUCTURAL PANELS AND BOTTOM CHORD SHALL HAVE A PROPERLY ATTACHED RIGID CEILING.

IMPORTANTFURNISH A COPY OF THIS DESIGN TO THE INSTALLATION CONTRACTOR. ITW BCG, INC. WILL NOT BE RESPONSIBLE FOR ANY DEVIATION FROM THIS DESIGN; ANY FAILURE TO BUILD THE TRUSS IN CONFORMANCE WITH TPI; OR FABRICATING, HANDLING, SHIPPING, INSTALLING & BRACING OF TRUSSES.
DESIGN CONFORMS WITH APPLICABLE PROVISIONS OF NDS (NATIONAL DESIGN SPEC, BY AF&PA) AND TPI. CONNECTOR PLATES ARE MADE OF 20/18/16GA (H,H/SS/K) ASTM A653 GRADE 40/60 (H, K/H,SS) GALV. STEEL. APPLY PLATES TO EACH FACE OF TRUSS AND, UNLESS OTHERWISE LOCATED ON THIS DESIGN, POSITION PER DRAWING. ANY INSPECTION OF PLATES FOLLOWED BY (1) SHALL BE PER ANNEX A3 OF TPI1-2002 SEC.3. A SEAL ON THIS DRAWING INDICATES ACCEPTANCE OF PROFESSIONAL ENGINEERING RESPONSIBILITY SOLELY FOR THE TRUSS COMPONENT DESIGN SHOWN. THE SUITABILITY AND USE OF THIS COMPONENT FOR ANY BUILDING IS THE RESPONSIBILITY OF THE BUILDING DESIGNER PER ANSI/TPI 1 SEC. 2.

DOUGLAS FLEMING LICENSE No. 66648 STATE OF FLORIDA PROFESSIONAL ENGINEER
02/24/2011

TC LL	20.0 PSF	REF	R487-- 57031
TC DL	10.0 PSF	DATE	02/24/11
BC DL	10.0 PSF	DRW	HCUSR487 11055005
BC LL	0.0 PSF	HC-ENG	DF/DF *
TOT.LD.	40.0 PSF	SEQN-	184520
DUR.FAC.	1.25		
SPACING	24.0"	JREF-	1U9Q487_Z01

(11-036--Fill in later AARON NICKELSON/SCHNEIDER -- , ** - M1)

Top chord 2x4 SP #2 Dense
Bot chord 2x4 SP #2 Dense
Webs 2x4 SP #3

End verticals not exposed to wind pressure.

Bottom chord checked for 10.00 psf non-concurrent live load.

MWFRS loads based on trusses located at least 7.50 ft. from roof edge.

110 mph wind, 15.00 ft mean hgt, ASCE 7-05, CLOSED bldg, Located anywhere in roof, CAT II, EXP B, wind TC DL=5.0 psf, wind BC DL=5.0 psf. Iw=1.00 GCpi(+/-)=0.18

Wind reactions based on MWFRS pressures.

Deflection meets L/240 live and L/180 total load.

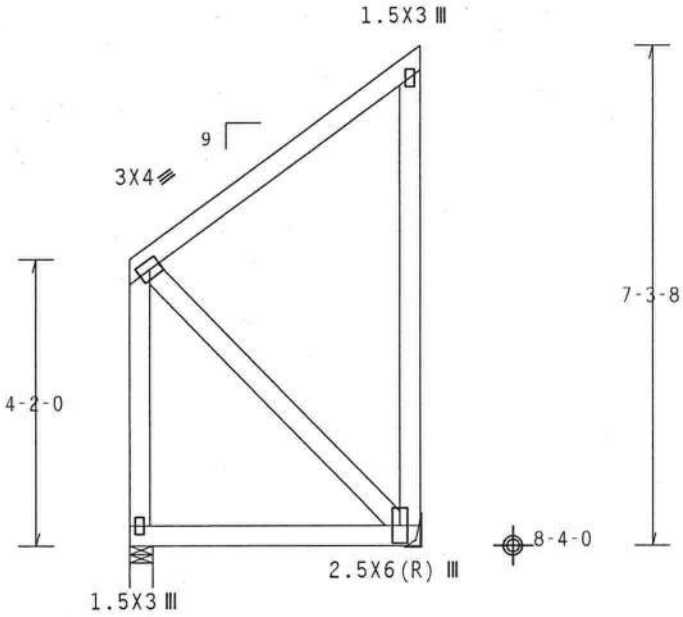

R=177 U=0 W=4"
RL=69/-24 R=177 U=103

Design Crit: FBC2007Res/TPI-2002(STD) FT/RT=10%(0%)/0(0) 9.05.03.0319.16 QTY:3 FL/-/4/-/-/R/- Scale =.375"/Ft.

PLT TYP. Wave

ALPINE
ITW Building Components Group Inc.
Haines City, FL 33844
FL COA #0 278

WARNING TRUSSES REQUIRE EXTREME CARE IN FABRICATION, HANDLING, SHIPPING, INSTALLING AND BRACING. REFER TO BCSI (BUILDING COMPONENT SAFETY INFORMATION), PUBLISHED BY TPI (TRUSS PLATE INSTITUTE, 218 NORTH LEE STREET, SUITE 312, ALEXANDRIA, VA, 22314) AND WTCA (WOOD TRUSS COUNCIL OF AMERICA, 6300 ENTERPRISE LANE, MADISON, WI 53719) FOR SAFETY PRACTICES PRIOR TO PERFORMING THESE FUNCTIONS. UNLESS OTHERWISE INDICATED TOP CHORD SHALL HAVE PROPERLY ATTACHED STRUCTURAL PANELS AND BOTTOM CHORD SHALL HAVE A PROPERLY ATTACHED RIGID CEILING.

IMPORTANTFURNISH A COPY OF THIS DESIGN TO THE INSTALLATION CONTRACTOR. ITW BCG, INC. SHALL NOT BE RESPONSIBLE FOR ANY DEVIATION FROM THIS DESIGN; ANY FAILURE TO BUILD THE TRUSS IN COMPLIANCE WITH TPI; OR FABRICATING, HANDLING, SHIPPING, INSTALLING & BRACING OF TRUSSES.
DESIGN CONFORMS WITH APPLICABLE PROVISIONS OF NDS (NATIONAL DESIGN SPEC. BY AF&PA) AND TPI. ITW BCG CONNECTOR PLATES ARE MADE OF 20/18/16GA (W,H/SS/K) ASTM A653 GRADE 40/60 (W, K/H,SS) GALV. STEEL. APPLY PLATES TO EACH FACE OF TRUSS AND, UNLESS OTHERWISE LOCATED ON THIS DESIGN, POSITION PER DRAWINGS. ANY INSPECTION OF PLATES FOLLOWED BY (1) SHALL BE PER ANNEX A3 OF TPI1-2002 SEC.3. A SEAL ON THIS DRAWING INDICATES ACCEPTANCE OF PROFESSIONAL ENGINEERING RESPONSIBILITY SOLELY FOR THE TRUSS COMPONENT DESIGN SHOWN. THE SUITABILITY AND USE OF THIS COMPONENT FOR ANY BUILDING IS THE RESPONSIBILITY OF THE BUILDING DESIGNER PER ANSI/TPI 1 SEC. 2.

DOUGLAS FLEMING LICENSE No. 66648 STATE OF FLORIDA PROFESSIONAL ENGINEER
02/24/2011

TC LL	20.0 PSF	REF	R487-- 57032
TC DL	10.0 PSF	DATE	02/24/11
BC DL	10.0 PSF	DRW	HCUSR487 11055006
BC LL	0.0 PSF	HC-ENG	DF/DF *
TOT.LD.	40.0 PSF	SEQN-	184526
DUR.FAC.	1.25		
SPACING	24.0"	JREF-	1U9Q487_Z01

(11-036--Fill in later AARON NICKELSON/SCHNEIDER -- , ** - AP)

Top chord 2x4 SP #2 Dense
Bot chord 2x4 SP #2 Dense
Webs 2x4 SP #3

110 mph wind, 21.54 ft mean hgt, ASCE 7-05, CLOSED bldg, Located anywhere in roof, CAT II, EXP B, wind TC DL=5.0 psf, wind BC DL=2.0 psf. Iw=1.00 GCpi(+/-)=0.18

Wind reactions based on MWFRS pressures.

Refer to DWG PB1200109 for piggyback details.

Special loads
------(Lumber Dur.Fac.=1.25 / Plate Dur.Fac.=1.25)

TC- From	65 plf at	0.00 to	65 plf at	3.89
TC- From	65 plf at	3.89 to	65 plf at	7.78
BC- From	4 plf at	0.00 to	4 plf at	7.78

Deflection meets L/240 live and L/180 total load.

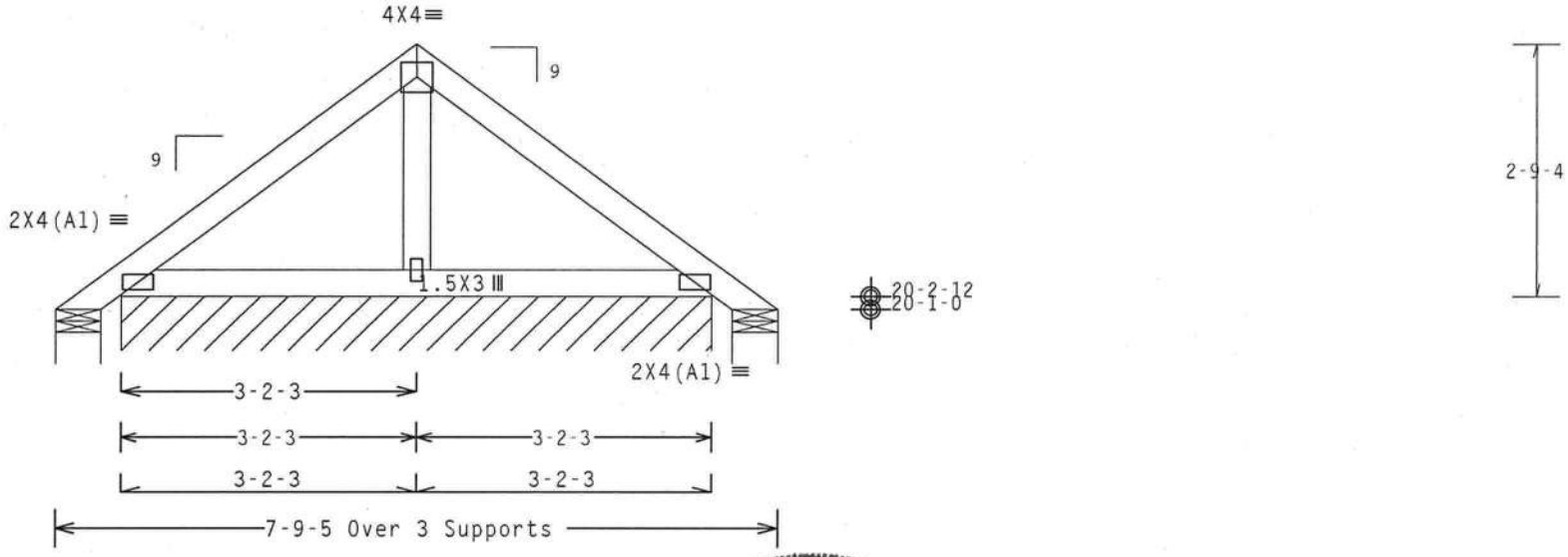

R=-26 Rw=61 U=63 W=5.833"
RL=68/R=87 PLF U=29 PLF W=6-4-5

R=-26 Rw=20 U=21 W=5.833"

Design Crit: FBC2007Res/TPI-2002(SPID) FT/RT=10%(0%)/0(0) 9.05.03.0319.16 QTY:7 FL/-/4/-/-/R/- Scale =.5"/Ft.

PLT TYP. Wave

ALPINE
ITW Building Components Group Inc.
Haines City, FL 33844
FL COA #0 278

WARNING TRUSSES REQUIRE EXTREME CARE IN FABRICATION, HANDLING, SHIPPING, INSTALLING AND BRACING. REFER TO BCSI (BUILDING COMPONENT SAFETY INFORMATION), PUBLISHED BY TPI (TRUSS PLATE INSTITUTE, 218 NORTH LEE STREET, SUITE 312, ALEXANDRIA, VA. 22314) AND WTCA (WOOD TRUSS COUNCIL OF AMERICA, 6300 ENTERPRISE LANE, MADISON, WI 53719) FOR SAFETY PRACTICES PRIOR TO PERFORMING THESE FUNCTIONS. UNLESS OTHERWISE INDICATED TOP CHORD SHALL HAVE PROPERLY ATTACHED STRUCTURAL PANELS AND BOTTOM CHORD SHALL HAVE A PROPERLY ATTACHED RIGID CEILING.

IMPORTANTFURNISH A COPY OF THIS DESIGN TO THE INSTALLATION CONTRACTOR. ITW BCG, INC. SHALL NOT BE RESPONSIBLE FOR ANY DEVIATION FROM THIS DESIGN; ANY FAILURE TO BUILD THE TRUSS IN CONFORMANCE WITH TPI; OR FABRICATING, HANDLING, SHIPPING, INSTALLING & BRACING OF TRUSSES.
DESIGN CONFORMS WITH APPLICABLE PROVISIONS OF NDS (NATIONAL DESIGN SPEC. BY AF&PA) AND TPI. CONNECTOR PLATES ARE MADE OF 20/18/16GA (W,H/SS/K) ASTM A653 GRADE 40/60 (W, K/H,SS) GALV. STEEL. APPLY PLATES TO EACH FACE OF TRUSS AND, UNLESS OTHERWISE LOCATED ON THIS DESIGN, POSITION PER DRAWING 1603. ANY INSPECTION OF PLATES FOLLOWED BY (1) SHALL BE PER ANNEX A3 OF TPI1-2002 SEC.3. A SEAL ON THIS DRAWING INDICATES ACCEPTANCE OF PROFESSIONAL ENGINEERING RESPONSIBILITY SOLELY FOR THE TRUSS COMPONENT DESIGN SHOWN. THE SUITABILITY AND USE OF THIS COMPONENT FOR ANY BUILDING IS THE RESPONSIBILITY OF THE BUILDING DESIGNER PER ANSI/TPI 1 SEC. 2.

DOUGLAS FLEMING LICENSE No. 66648 STATE OF FLORIDA PROFESSIONAL ENGINEER
02/24/2011

TC LL	20.0 PSF	REF	R487-- 57033
TC DL	10.0 PSF	DATE	02/24/11
BC DL	10.0 PSF	DRW	HCUSR487 11055020
BC LL	0.0 PSF	HC-ENG	DF/DF
TOT.LD.	40.0 PSF	SEQN-	184495
DUR.FAC.	1.25		
SPACING	24.0"	JREF-	1U9Q487_Z01

(11-036--Fill in later AARON NICKELSON/SCHNEIDER -- , ** - APGE)

Top chord 2x4 SP #2 Dense
Bot chord 2x4 SP #2 Dense
Webs 2x4 SP #3

110 mph wind, 21.36 ft mean hgt, ASCE 7-05, CLOSED bldg, Located anywhere in roof, CAT II, EXP B, wind TC DL=5.0 psf, wind BC DL=2.0 psf. Iw=1.00 GCpi(+/-)=0.18

Wind reactions based on MWFRS pressures.

Refer to DWG PB1200109 for piggyback details.

Special loads
------(Lumber Dur.Fac.=1.25 / Plate Dur.Fac.=1.25)
TC- From 65 plf at -0.68 to 65 plf at 2.72
TC- From 65 plf at 2.72 to 65 plf at 6.13
BC- From 4 plf at -0.68 to 4 plf at 6.13

Deflection meets L/240 live and L/180 total load.

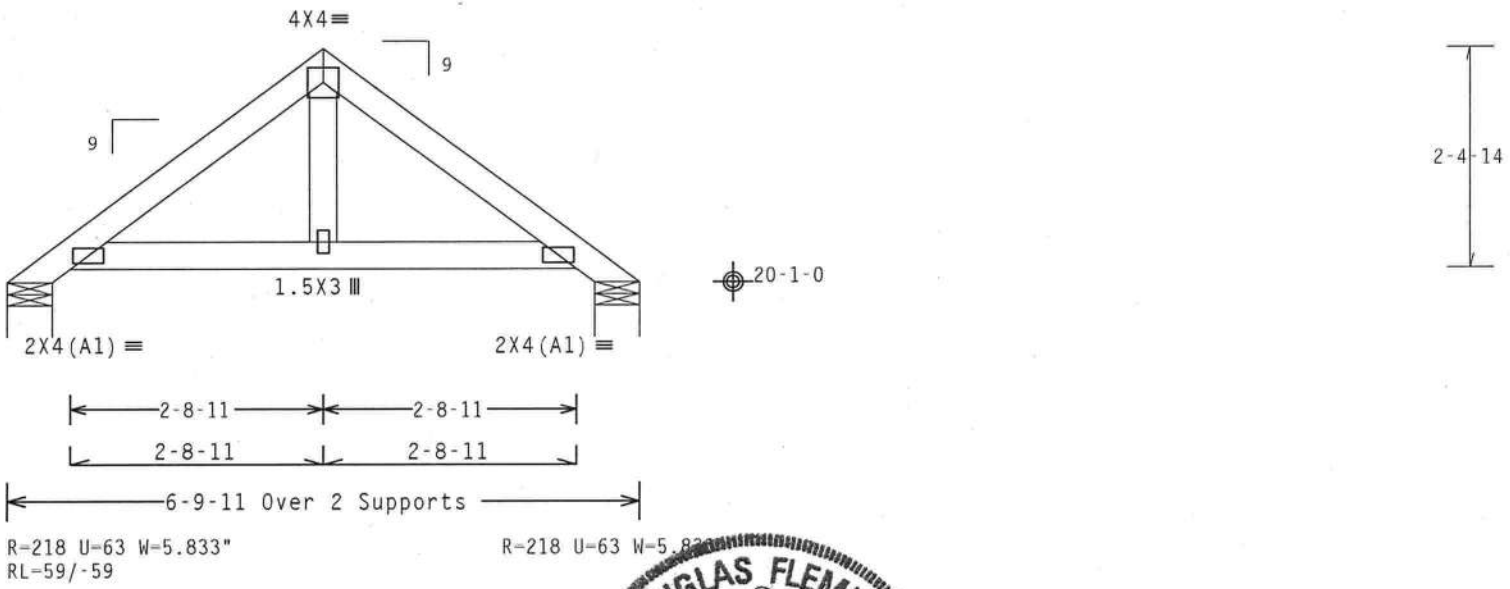

Design Crit: FBC2007Res/TPI-2002(SPI) FT/RT=10%(0%)/0(0) 9.05.03.0319.16 QTY:2 FL/-/4/-/-/R/- Scale =.5"/Ft.

PLT TYP. Wave

ALPINE
ITW Building Components Group Inc.
Haines City, FL 33844
FL COA #0 278

WARNING TRUSSES REQUIRE EXTREME CARE IN FABRICATION, HANDLING, SHIPPING, INSTALLING AND BRACING. REFER TO BCSI (BUILDING COMPONENT SAFETY INFORMATION), PUBLISHED BY TPI (TRUSS PLATE INSTITUTE, 218 NORTH LEE STREET, SUITE 312, ALEXANDRIA, VA, 22314) AND WTCA (WOOD TRUSS COUNCIL OF AMERICA, 6300 ENTERPRISE LANE, MADISON, WI 53719) FOR SAFETY PRACTICES PRIOR TO PERFORMING THESE FUNCTIONS. UNLESS OTHERWISE INDICATED TOP CHORD SHALL HAVE PROPERLY ATTACHED STRUCTURAL PANELS AND BOTTOM CHORD SHALL HAVE A PROPERLY ATTACHED RIGID CEILING.

IMPORTANTFURNISH A COPY OF THIS DESIGN TO THE INSTALLATION CONTRACTOR. ITW BCG, INC. SHALL NOT BE RESPONSIBLE FOR ANY DEVIATION FROM THIS DESIGN; ANY FAILURE TO BUILD THE TRUSS IN CONFORMANCE WITH TPI; OR FABRICATING, HANDLING, SHIPPING, INSTALLING & BRACING OF TRUSSES.
DESIGN CONFORMS WITH APPLICABLE PROVISIONS OF NDS (NATIONAL DESIGN SPEC. BY AF&PA) AND TPI. ITW BCG CONNECTOR PLATES ARE MADE OF 20/18/16GA (W,H/SS/K) ASTM A653 GRADE 40/60 (W, K/H,SS) GALV. STEEL. APPLY PLATES TO EACH FACE OF TRUSS AND, UNLESS OTHERWISE LOCATED ON THIS DESIGN, POSITION PER DRAWINGS. ANY INSPECTION OF PLATES FOLLOWED BY (I) SHALL BE PER ANNEX A3 OF TPI1-2002 SEC.3. A SEALED DRAWING INDICATES ACCEPTANCE OF PROFESSIONAL ENGINEERING RESPONSIBILITY SOLELY FOR THE TRUSS COMPONENT DESIGN SHOWN. THE SUITABILITY AND USE OF THIS COMPONENT FOR ANY BUILDING IS THE RESPONSIBILITY OF THE BUILDING DESIGNER PER ANSI/TPI 1 SEC. 2.

DOUGLAS FLEMING LICENSE No. 66648 STATE OF FLORIDA PROFESSIONAL ENGINEER

02/24/2011

TC LL	20.0 PSF	REF R487-- 57034
TC DL	10.0 PSF	DATE 02/24/11
BC DL	10.0 PSF	DRW HCUSR487 11055021
BC LL	0.0 PSF	HC-ENG DF/DF
TOT.LD.	40.0 PSF	SEQN- 184507
DUR.FAC.	1.25	
SPACING	24.0"	JREF- 1U9Q487_Z01

GABLE STUD REINFORCEMENT DETAIL

ASCE 7-05: 110 MPH WIND SPEED, 30' MEAN HEIGHT, ENCLOSED, I = 1.00, EXPOSURE C, Kzt = 1.00

MAX GABLE VERTICAL LENGTH

2X4 GABLE VERTICAL SPACING	SPECIES	GRADE \ BRACE	NO BRACES	(1) 1X4 "L" BRACE *		(1) 2X4 "L" BRACE *		(2) 2X4 "L" BRACE **		(1) 2X6 "L" BRACE *		(2) 2X6 "L" BRACE **	
				GROUP A	GROUP B	GROUP A	GROUP B	GROUP A	GROUP B	GROUP A	GROUP B	GROUP A	GROUP B
24" O.C.	SPF HF	#1 / #2	3' 8"	6' 4"	6' 6"	7' 6"	7' 8"	8' 11"	9' 2"	11' 9"	12' 1"	14' 0"	14' 0"
		#3	3' 7"	5' 5"	5' 5"	7' 2"	7' 2"	8' 11"	8' 11"	11' 2"	11' 2"	14' 0"	14' 0"
		STUD	3' 7"	5' 5"	5' 5"	7' 1"	7' 1"	8' 11"	8' 11"	11' 1"	11' 1"	14' 0"	14' 0"
		STANDARD	3' 7"	4' 8"	4' 8"	6' 1"	6' 1"	8' 3"	8' 3"	9' 6"	9' 6"	12' 11"	12' 11"
	SP DFL	#1	4' 0"	6' 4"	6' 10"	7' 6"	8' 1"	8' 11"	9' 7"	11' 9"	12' 8"	14' 0"	14' 0"
		#2	3' 11"	6' 4"	6' 10"	7' 6"	8' 1"	8' 11"	9' 7"	11' 9"	12' 8"	14' 0"	14' 0"
		#3	3' 9"	5' 7"	5' 7"	7' 4"	7' 4"	8' 11"	9' 5"	11' 5"	11' 5"	14' 0"	14' 0"
		STUD	3' 9"	5' 6"	5' 6"	7' 3"	7' 3"	8' 11"	9' 5"	11' 4"	11' 4"	14' 0"	14' 0"
		STANDARD	3' 8"	4' 9"	4' 9"	6' 3"	6' 3"	8' 5"	8' 5"	9' 9"	9' 9"	13' 3"	14' 0"
16" O.C.	SPF HF	#1 / #2	4' 2"	7' 3"	7' 5"	8' 7"	8' 10"	10' 3"	10' 6"	13' 5"	13' 10"	14' 0"	14' 0"
		#3	4' 1"	6' 8"	6' 8"	8' 7"	8' 7"	10' 3"	10' 3"	13' 5"	13' 5"	14' 0"	14' 0"
		STUD	4' 1"	8' 0"	8' 0"	8' 7"	8' 7"	10' 3"	10' 3"	13' 5"	13' 5"	14' 0"	14' 0"
		STANDARD	4' 1"	5' 8"	5' 8"	7' 6"	7' 6"	10' 1"	10' 1"	11' 8"	11' 8"	14' 0"	14' 0"
	SP DFL	#1	4' 7"	7' 3"	7' 9"	8' 7"	9' 3"	10' 3"	11' 0"	13' 5"	14' 0"	14' 0"	14' 0"
		#2	4' 6"	7' 3"	7' 9"	8' 7"	9' 3"	10' 3"	11' 0"	13' 5"	14' 0"	14' 0"	14' 0"
		#3	4' 4"	6' 10"	6' 10"	8' 7"	9' 0"	10' 3"	10' 9"	13' 5"	14' 0"	14' 0"	14' 0"
		STUD	4' 4"	6' 9"	6' 9"	8' 7"	8' 11"	10' 3"	10' 9"	13' 5"	14' 0"	14' 0"	14' 0"
		STANDARD	4' 2"	5' 10"	5' 10"	7' 8"	7' 8"	10' 3"	10' 4"	11' 11"	11' 11"	14' 0"	14' 0"
12" O.C.	SPF HF	#1 / #2	4' 7"	8' 0"	8' 2"	9' 5"	9' 8"	11' 3"	11' 7"	14' 0"	14' 0"	14' 0"	14' 0"
		#3	4' 6"	7' 8"	7' 8"	9' 5"	9' 5"	11' 3"	11' 3"	14' 0"	14' 0"	14' 0"	14' 0"
		STUD	4' 6"	7' 8"	7' 8"	9' 5"	9' 5"	11' 3"	11' 3"	14' 0"	14' 0"	14' 0"	14' 0"
		STANDARD	4' 6"	6' 7"	6' 7"	8' 8"	8' 8"	11' 3"	11' 3"	13' 6"	13' 6"	14' 0"	14' 0"
	SP DFL	#1	5' 1"	8' 0"	8' 7"	9' 5"	10' 2"	11' 3"	12' 1"	14' 0"	14' 0"	14' 0"	14' 0"
		#2	4' 11"	8' 0"	8' 7"	9' 5"	10' 2"	11' 3"	12' 1"	14' 0"	14' 0"	14' 0"	14' 0"
		#3	4' 9"	7' 11"	7' 11"	9' 5"	9' 11"	11' 3"	11' 10"	14' 0"	14' 0"	14' 0"	14' 0"
		STUD	4' 9"	7' 9"	7' 9"	9' 5"	9' 11"	11' 3"	11' 10"	14' 0"	14' 0"	14' 0"	14' 0"
		STANDARD	4' 7"	6' 9"	6' 9"	8' 10"	8' 10"	11' 3"	11' 7"	13' 10"	13' 10"	14' 0"	14' 0"

BRACING GROUP SPECIES AND GRADES:

GROUP A:

SPRUCE-PINE-FIR

#1 / #2	STANDARD
#3	STUD

HEM-FIR

#2	STUD
#3	STANDARD

DOUGLAS FIR-LARCH

#3
STUD
STANDARD

SOUTHERN PINE

#3
STUD
STANDARD

GROUP B:

HEM-FIR

#1 & BTR
#1

SOUTHERN PINE

#1
#2

DOUGLAS FIR-LARCH

#1
#2

GABLE TRUSS DETAIL NOTES:

LIVE LOAD DEFLECTION CRITERIA IS L/240.

PROVIDE UPLIFT CONNECTIONS FOR 100 PLF OVER CONTINUOUS BEARING (5 PSF TC DEAD LOAD).

GABLE END SUPPORTS LOAD FROM 4' 0" OUTLOOKERS WITH 2' 0" OVERHANG, OR 12" PLYWOOD OVERHANG.

ATTACH EACH "L" BRACE WITH 10d NAILS. (0.128"x3" min)

* FOR (1) "L" BRACE: SPACE NAILS AT 2" O.C. IN 18" END ZONES AND 4" O.C. BETWEEN ZONES.

** FOR (2) "L" BRACES: SPACE NAILS AT 3" O.C. IN 18" END ZONES AND 6" O.C. BETWEEN ZONES.

"L" BRACING MUST BE A MINIMUM OF 80% OF WEB MEMBER LENGTH.

GABLE VERTICAL PLATE SIZES

VERTICAL LENGTH	NO SPLICE
LESS THAN 4' 0"	1X4 OR 2X3
GREATER THAN 4' 0", BUT LESS THAN 11' 6"	2.5X4
GREATER THAN 11' 6"	3X4

\+ REFER TO COMMON TRUSS DESIGN FOR PEAK, SPLICE, AND HEEL PLATES.

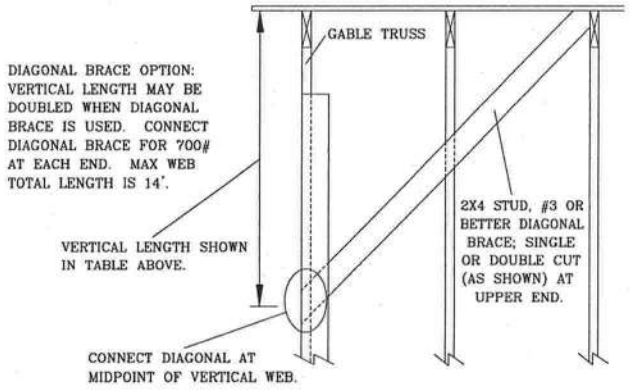

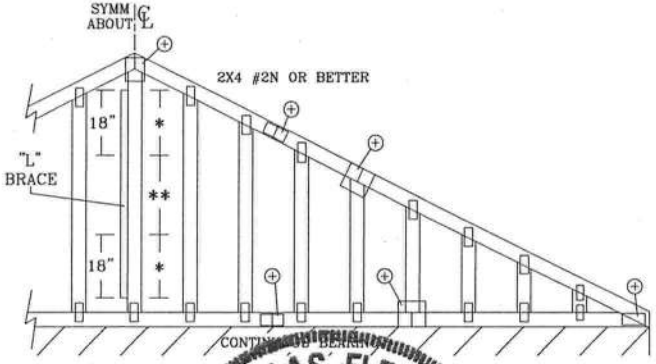

REFER TO CHA[illegible] FOR [illegible] VERTICAL LENGTH.

DOUGLAS FLEMING LICENSE No. 66648 STATE OF FLORIDA PROFESSIONAL ENGINEER

02/24/2011

TW Building Components Group Inc.

Earth City, MO 63045

WARNING READ AND FOLLOW ALL NOTES ON THIS SHEET!
Trusses require extreme care in fabricating, handling, shipping, installing and bracing. Refer to and follow BCSI (Building Component Safety Information, by TPI and WTCA) for safety practices prior to performing these functions. Installers shall provide temporary bracing per BCSI. Unless noted otherwise, top chord shall have properly attached structural panels and bottom chord shall have a properly attached right ceiling. Locations shown for permanent lateral restraint of webs shall have bracing installed per BCSI sections B3 & B7. See this job's general notes page for more information.

IMPORTANT FURNISH COPY OF THIS DESIGN TO INSTALLATION CONTRACTOR.
ITW Building Components Group Inc. (ITWBCG) shall not be responsible for any deviation from this design, any failure to build the truss in conformance with TPI, or fabricating, handling, shipping, installing & bracing of trusses. ITWBCG connector plates are made of 20/18/16GA (W,H/S/K) ASTM A653 grade 37/40/60 (K/W/H,S) galv. steel. Apply plates to each face of truss, positioned as shown above and on design details. A seal on this drawing or cover page indicates acceptance and professional engineering responsibility solely for the truss component design shown. The suitability and use of this component for any building is the responsibility of the Building Designer per ANST/TPI 1 Sec. 2.
ITW-BCG: www.itwbcg.com; TPI: www.tpinst.com; WTCA: www.sbcindustry.com; ICC: www.iccsafe.org

MAX. TOT. LD. 60 PSF

MAX. SPACING 24.0"

REF	ASCE7-05-GAB11030
DATE	1/1/09
DRWG	A11030050109

GABLE DETAIL
FOR LET-IN VERTICALS

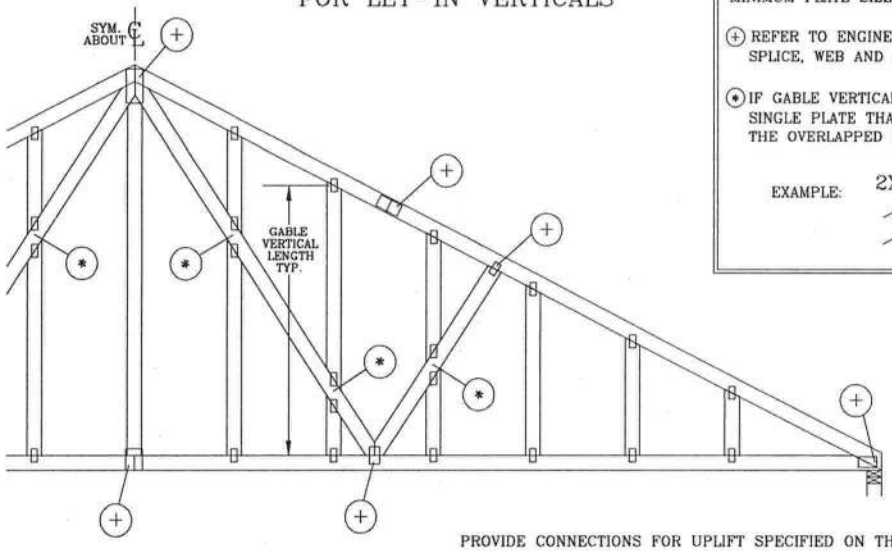

GABLE TRUSS PLATE SIZES

REFER TO APPROPRIATE ITW GABLE DETAIL FOR MINIMUM PLATE SIZES FOR VERTICAL STUDS.

(+) REFER TO ENGINEERED TRUSS DESIGN FOR PEAK, SPLICE, WEB AND HEEL PLATES.

(*) IF GABLE VERTICAL PLATES OVERLAP, USE A SINGLE PLATE THAT COVERS THE TOTAL AREA OF THE OVERLAPPED PLATES TO SPAN THE WEB.

EXAMPLE:

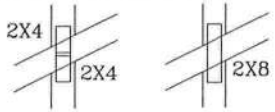

"T" REINFORCEMENT ATTACHMENT DETAIL

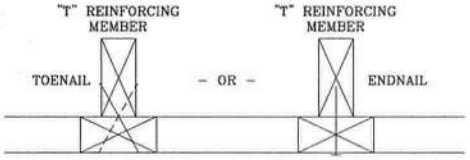

TO CONVERT FROM "L" TO "T" REINFORCING MEMBERS, MULTIPLY "T" INCREASE BY LENGTH (BASED ON APPROPRIATE ITW GABLE DETAIL).

MAXIMUM ALLOWABLE "T" REINFORCED GABLE VERTICAL LENGTH IS 14' FROM TOP TO BOTTOM CHORD.

WEB LENGTH INCREASE W/ "T" BRACE

WIND SPEED AND MRH	"T" REINF. MBR. SIZE	"T" INCREASE
140 MPH	2x4	10 %
15 FT	2x6	50 %
140 MPH	2x4	10 %
30 FT	2x6	50 %
130 MPH	2x4	10 %
15 FT	2x6	50 %
130 MPH	2x4	10 %
30 FT	2x6	50 %
120 MPH	2x4	10 %
15 FT	2x6	50 %
120 MPH	2x4	10 %
30 FT	2x6	40 %
110 MPH	2x4	10 %
15 FT	2x6	40 %
110 MPH	2x4	10 %
30 FT	2x6	50 %
100 MPH	2x4	20 %
15 FT	2x6	30 %
100 MPH	2x4	10 %
30 FT	2x6	40 %
90 MPH	2x4	20 %
15 FT	2x6	20 %
90 MPH	2x4	20 %
30 FT	2x6	30 %

EXAMPLE:
ASCE WIND SPEED = 100 MPH
MEAN ROOF HEIGHT = 30 FT, Kzt = 1.00
GABLE VERTICAL = 24" O.C. SP #3
"T" REINFORCING MEMBER SIZE = 2X4
"T" BRACE INCREASE (FROM ABOVE) = 10% = 1.10
(1) 2X4 "L" BRACE LENGTH = 6' 7"
MAXIMUM "T" REINFORCED GABLE VERTICAL LENGTH
1.10 x 6' 7" = 7' 3"

PROVIDE CONNECTIONS FOR UPLIFT SPECIFIED ON THE ENGINEERED TRUSS DESIGN.

ATTACH EACH "T" REINFORCING MEMBER WITH
END DRIVEN NAILS:
10d COMMON (0.148"X 3.",MIN) NAILS AT 4" O.C. PLUS
(4) NAILS IN TOP AND BOTTOM CHORD.

TOENAILED NAILS:
10d COMMON (0.148"x3",MIN) TOENAILS AT 4" O.C. PLUS
(4) TOENAILS IN TOP AND BOTTOM CHORD.

THIS DETAIL TO BE USED WITH THE APPROPRIATE ITW GABLE DETAIL FOR ASCE WIND LOAD.
ASCE 7-98 GABLE DETAIL DRAWINGS
A13015980109, A12015980109, A11015980109, A10015980109,
A13030980109, A12030980109, A11030980109, A10030980109
ASCE 7-02 GABLE DETAIL DRAWINGS
A13015020109, A12015020109, A11015020109, A10015020109, A14015020109,
A13030020109, A12030020109, A11030020109, A10030020109, A14030020109
ASCE 7-05 GABLE DETAIL DRAWINGS
A13015050109, A12015050109, A11015050109, A10015050109, A14015050109,
A13030050109, A12030050109, A11030050109, A10030050109, A14030050109

SEE APPROPRIATE ITW GABLE DETAIL FOR MAXIMUM UNREINFORCED GABLE VERTICAL LENGTH.

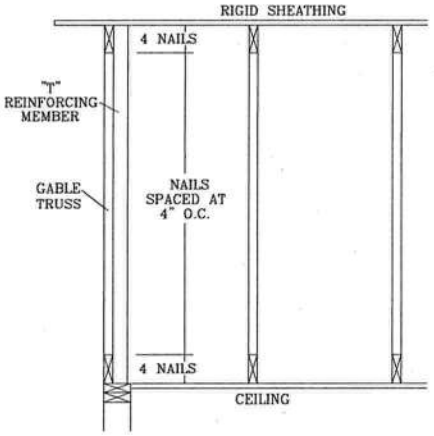

Feb 24 '11
02/24/2011

ITW
Building Components Group Inc.
Earth City, MO 63045

WARNING READ AND FOLLOW ALL NOTES ON THIS SHEET!
Trusses require extreme care in fabricating, handling, shipping, installing and bracing. Refer to and follow BCSI (Building Component Safety Information, by TPI and WTCA) for safety practices prior to performing these functions. Installers shall provide temporary bracing per BCSI. Unless noted otherwise, top chord shall have properly attached structural panels and bottom chord shall have a properly attached rigid ceiling. Locations shown for permanent lateral restraint of webs shall have bracing installed per BCSI sections B3 & B7. See this job's general notes page for more information.

IMPORTANT FURNISH COPY OF THIS DESIGN TO INSTALLATION CONTRACTOR.
ITW Building Components Group Inc. (ITWBCG) shall not be responsible for any deviation from this design, any failure to build the truss in conformance with TPI, or fabricating, handling, shipping, installing & bracing of trusses. ITWBCG connector plates are made of 20/18/16GA (W,H/S/K) ASTM A653 grade 37 & 40/60 (K/W/H,S) galv. steel. Apply plates to each face of truss, positioned as shown above and on joints unless otherwise specified. A seal on this drawing or cover page indicates acceptance and professional engineering responsibility solely for the truss component design shown. The suitability and use of this component for any building is the responsibility of the Building Designer per ANST/TPI 1 Sec. 2.
ITW-BCG: www.itwbcg.com; TPI: www.tpinst.com; WTCA: www.sbcindustry.com; ICC: www.iccsafe.org

REF	LET-IN VERT
DATE	1/1/09
DRWG	GBLLETIN0109

MAX TOT. LD. 60 PSF
DUR. FAC. ANY
MAX SPACING 24.0"

GABLE STUD REINFORCEMENT DETAIL

ASCE 7-05: 110 MPH WIND SPEED, 15' MEAN HEIGHT, ENCLOSED, I = 1.00, EXPOSURE C, Kzt = 1.00

MAX GABLE VERTICAL LENGTH	2X4 GABLE VERTICAL SPACING	SPECIES	BRACE GRADE	NO BRACES	(1) 1X4 "L" BRACE *		(1) 2X4 "L" BRACE *		(2) 2X4 "L" BRACE **		(1) 2X6 "L" BRACE *		(2) 2X6 "L" BRACE **	
					GROUP A	GROUP B	GROUP A	GROUP B	GROUP A	GROUP B	GROUP A	GROUP B	GROUP A	GROUP B
	24" O.C.	SPF HF	#1 / #2	3' 10"	6' 8"	6' 10"	7' 11"	8' 1"	9' 5"	9' 8"	12' 5"	12' 9"	14' 0"	14' 0"
			#3	3' 9"	6' 0"	6' 0"	7' 11"	7' 11"	9' 5"	9' 5"	12' 4"	12' 4"	14' 0"	14' 0"
			STUD	3' 9"	6' 0"	6' 0"	7' 11"	7' 11"	9' 5"	9' 5"	12' 3"	12' 3"	14' 0"	14' 0"
			STANDARD	3' 9"	5' 2"	5' 2"	6' 9"	6' 9"	9' 1"	9' 1"	10' 7"	10' 7"	14' 0"	14' 0"
		SP DFL	#1	4' 3"	6' 8"	7' 2"	7' 11"	8' 6"	9' 5"	10' 2"	12' 5"	13' 5"	14' 0"	14' 0"
			#2	4' 2"	6' 8"	7' 2"	7' 11"	8' 6"	9' 5"	10' 2"	12' 5"	13' 5"	14' 0"	14' 0"
			#3	4' 0"	6' 2"	6' 2"	7' 11"	8' 1"	9' 5"	9' 11"	12' 5"	12' 8"	14' 0"	14' 0"
			STUD	4' 0"	6' 1"	6' 1"	7' 11"	8' 0"	9' 5"	9' 11"	12' 5"	12' 6"	14' 0"	14' 0"
			STANDARD	3' 10"	5' 3"	5' 3"	6' 11"	6' 11"	9' 4"	9' 4"	10' 10"	10' 10"	14' 0"	14' 0"
	16" O.C.	SPF HF	#1 / #2	4' 5"	7' 8"	7' 10"	9' 1"	9' 4"	10' 10"	11' 1"	14' 0"	14' 0"	14' 0"	14' 0"
			#3	4' 4"	7' 4"	7' 4"	9' 1"	9' 1"	10' 10"	10' 10"	14' 0"	14' 0"	14' 0"	14' 0"
			STUD	4' 4"	7' 4"	7' 4"	9' 1"	9' 1"	10' 10"	10' 10"	14' 0"	14' 0"	14' 0"	14' 0"
			STANDARD	4' 4"	6' 4"	6' 4"	8' 4"	8' 4"	10' 10"	10' 10"	12' 11"	12' 11"	14' 0"	14' 0"
		SP DFL	#1	4' 10"	7' 8"	8' 3"	9' 1"	9' 9"	10' 10"	11' 8"	14' 0"	14' 0"	14' 0"	14' 0"
			#2	4' 9"	7' 8"	8' 3"	9' 1"	9' 9"	10' 10"	11' 8"	14' 0"	14' 0"	14' 0"	14' 0"
			#3	4' 6"	7' 7"	7' 7"	9' 1"	9' 6"	10' 10"	11' 4"	14' 0"	14' 0"	14' 0"	14' 0"
			STUD	4' 6"	7' 6"	7' 6"	9' 1"	9' 6"	10' 10"	11' 4"	14' 0"	14' 0"	14' 0"	14' 0"
			STANDARD	4' 5"	6' 5"	6' 5"	8' 6"	8' 6"	10' 10"	11' 1"	13' 3"	13' 3"	14' 0"	14' 0"
	12" O.C.	SPF HF	#1 / #2	4' 11"	8' 5"	8' 8"	10' 0"	10' 3"	11' 11"	12' 3"	14' 0"	14' 0"	14' 0"	14' 0"
			#3	4' 9"	8' 5"	8' 5"	10' 0"	10' 0"	11' 11"	11' 11"	14' 0"	14' 0"	14' 0"	14' 0"
			STUD	4' 9"	8' 5"	8' 5"	10' 0"	10' 0"	11' 11"	11' 11"	14' 0"	14' 0"	14' 0"	14' 0"
			STANDARD	4' 9"	7' 3"	7' 3"	9' 7"	9' 7"	11' 11"	11' 11"	14' 0"	14' 0"	14' 0"	14' 0"
		SP DFL	#1	5' 4"	8' 5"	9' 1"	10' 0"	10' 9"	11' 11"	12' 10"	14' 0"	14' 0"	14' 0"	14' 0"
			#2	5' 3"	8' 5"	9' 1"	10' 0"	10' 9"	11' 11"	12' 10"	14' 0"	14' 0"	14' 0"	14' 0"
			#3	5' 0"	8' 5"	8' 5"	10' 0"	10' 6"	11' 11"	12' 6"	14' 0"	14' 0"	14' 0"	14' 0"
			STUD	5' 0"	8' 5"	8' 7"	10' 0"	10' 6"	11' 11"	12' 6"	14' 0"	14' 0"	14' 0"	14' 0"
			STANDARD	4' 11"	7' 5"	7' 5"	9' 10"	9' 10"	11' 11"	12' 3"	14' 0"	14' 0"	14' 0"	14' 0"

BRACING GROUP SPECIES AND GRADES:

GROUP A:

SPRUCE-PINE-FIR

#1 / #2	STANDARD
#3	STUD

HEM-FIR

#2	STUD
#3	STANDARD

DOUGLAS FIR-LARCH

#3
STUD
STANDARD

SOUTHERN PINE

#3
STUD
STANDARD

GROUP B:

HEM-FIR

#1 & BTR
#1

SOUTHERN PINE

#1
#2

DOUGLAS FIR-LARCH

#1
#2

GABLE TRUSS DETAIL NOTES:

LIVE LOAD DEFLECTION CRITERIA IS L/240.

PROVIDE UPLIFT CONNECTIONS FOR 80 PLF OVER CONTINUOUS BEARING (5 PSF TC DEAD LOAD).

GABLE END SUPPORTS LOAD FROM 4' 0" OUTLOOKERS WITH 2' 0" OVERHANG, OR 12" PLYWOOD OVERHANG.

ATTACH EACH "L" BRACE WITH 10d NAILS. (0.128"x3" min)

* FOR (1) "L" BRACE: SPACE NAILS AT 2" O.C. IN 18" END ZONES AND 4" O.C. BETWEEN ZONES.

** FOR (2) "L" BRACES: SPACE NAILS AT 3" O.C. IN 18" END ZONES AND 6" O.C. BETWEEN ZONES.

"L" BRACING MUST BE A MINIMUM OF 80% OF WEB MEMBER LENGTH.

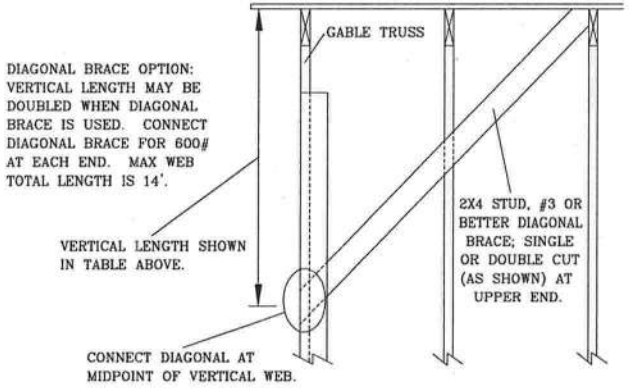

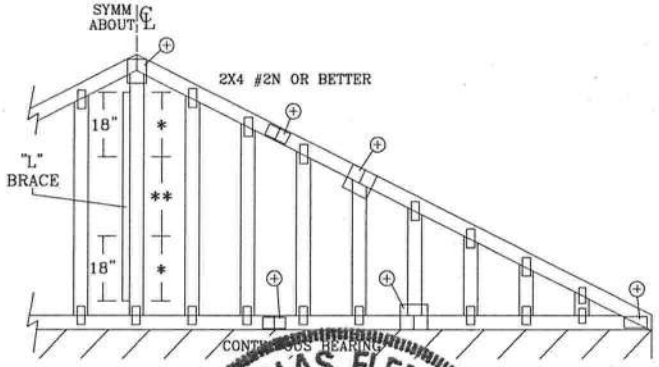

REFER TO CHART ABOVE FOR WEB LAYOUT VERTICAL LENGTH.

GABLE VERTICAL PLATE SIZES

VERTICAL LENGTH	NO SPLICE
LESS THAN 4' 0"	1X4 OR 2X3
GREATER THAN 4' 0", BUT LESS THAN 11' 6"	2.5X4
GREATER THAN 11' 6"	3X4

+ REFER TO COMMON TRUSS DESIGN FOR PEAK, SPLICE, AND HEEL PLATES.

TW Building Components Group Inc.

Earth City, MO 63045

WARNING READ AND FOLLOW ALL NOTES ON THIS SHEET!
Trusses require extreme care in fabricating, handling, shipping, installing and bracing. Refer to and follow BCSI (Building Component Safety Information, by TPI and WTCA) for safety practices prior to performing these functions. Installers shall provide temporary bracing per BCSI. Unless noted otherwise, top chord shall have properly attached structural panels and bottom chord shall have a properly attached rigid ceiling. Locations shown for permanent lateral restraint of webs shall have bracing installed per BCSI sections B3 & B7. See this job's general notes page for more information.

IMPORTANT FURNISH COPY OF THIS DESIGN TO INSTALLATION CONTRACTOR.
ITW Building Components Group Inc. (ITWBCG) shall not be responsible for any deviation from this design, any failure to build the truss in conformance with TPI, or fabricating, handling, shipping, installing & bracing of trusses. ITWBCG connector plates are made of 20/18/16GA (W,H/S/K) ASTM A653, grade 33/40/60 (K/W/H,S) galv. steel. Apply plates to each face of truss, positioned as shown above and on joint Details. A seal on this drawing or cover page indicates acceptance and professional engineering responsibility solely for the truss component design shown. The suitability and use of this component for any building is the responsibility of the Building Designer per ANST/TPI 1 Sec. 2.
ITW-BCG: www.itwbcg.com; TPI: www.tpinst.com; WTCA: www.sbcindustry.com; ICC: www.iccsafe.org

DOUGLAS FLEMING LICENSE No. 66648 STATE OF FLORIDA PROFESSIONAL ENGINEER
02/24/2011

MAX. TOT. LD. 60 PSF

MAX. SPACING 24.0"

REF	ASCE7-05-GAB11015
DATE	1/1/09
DRWG	A11015050109

120 PIGGYBACK DETAIL

UP TO 120 MPH WIND, 30.00 FT MEAN HGT, ASCE 7-02 OR ASCE 7-05, ENCLOSED BLDG. LOCATED ANYWHERE IN ROOF, CAT II, EXP C, WIND DL= 5.0 PSF (MIN), Kzt=1.0.

MAXIMUM TRUSS SPACING IS 24" O.C.
DETAIL IS NOT APPLICABLE IF CAP SUPPORTS ADDITIONAL LOADS SUCH AS CUPOLA, STEEPLE, CHIMNEY OR DRAG STRUT LOADS.

NOTE: TOP CHORDS OF TRUSSES SUPPORTING PIGGYBACK CAP TRUSSES MUST BE ADEQUATELY BRACED BY SHEATHING OR PURLINS. THE BUILDING ENGINEER OF RECORD SHALL PROVIDE DIAGONAL BRACING OR ANY OTHER SUITABLE ANCHORAGE TO PERMANENTLY RESTRAIN PURLINS, AND LATERAL BRACING FOR OUT OF PLANE LOADS OVER GABLE ENDS.

** REFER TO ENGINEER'S SEALED TRUSS DESIGN DRAWING FOR PIGGYBACK AND BASE TRUSS SPECIFICATIONS.

DETAIL A : PURLIN SPACING = 24" O.C. OR LESS

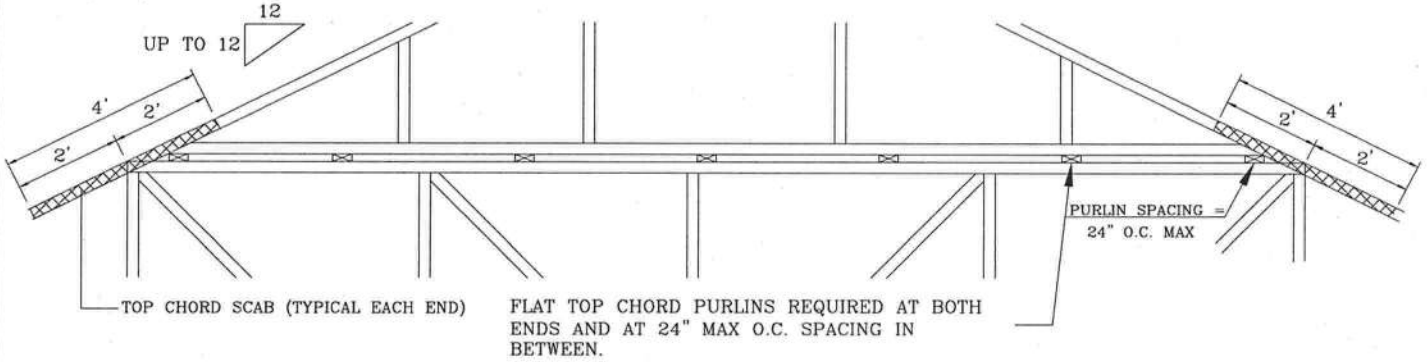

PIGGYBACK CAP TRUSS SLANT NAILED TO ALL TOP CHORD PURLIN BRACING WITH (2) 16d BOX NAILS (0.135"x3.5") AND SECURE TOP CHORD WITH 2x4 #3 GRADE SCAB (1 SIDE ONLY AT EACH END) ATTACHED WITH 2 ROWS OF 10d BOX NAILS (0.128"x3") AT 4" O.C.

ATTACH PURLIN BRACING TO THE FLAT TOP CHORD USING (2) 16d BOX NAILS (0.135"x3.5")

THE TOP CHORD #3 GRADE 2x4 SCAB MAY BE REPLACED WITH EITHER OF THE FOLLOWING: (1) 3x8 TRULOX PLATE ATTACHED WITH (8) 0.120"x1.375" NAILS, (4) INTO CAP TC & (4) INTO BASE TRUSS TC OR (1) 28PB WAVE PIGGYBACK PLATE PLATED TO THE PIGGYBACK TRUSS TC AND ATTACHED TO THE BASE TRUSS TC WITH (4) 0.120"x1.375" NAILS. NOTE: NAILING THRU HOLES OF WAVE PLATE IS ACCEPTABLE.

DETAIL B : PURLIN SPACING > 24" O.C.

PIGGYBACK CAP TRUSS SLANT NAILED TO ALL TOP CHORD PURLIN BRACING WITH (2) 16d BOX NAILS (0.135"x3.5") AND SECURE TOP CHORD WITH 2x4 #3 GRADE SCAB (1 SIDE ONLY AT EACH END) ATTACHED WITH 2 ROWS OF 10d BOX NAILS (0.128"x3") AT 4" O.C.

ATTACH PURLIN BRACING TO THE FLAT TOP CHORD USING A MINIMUM OF (2) 16d BOX NAILS (0.135"x3.5")

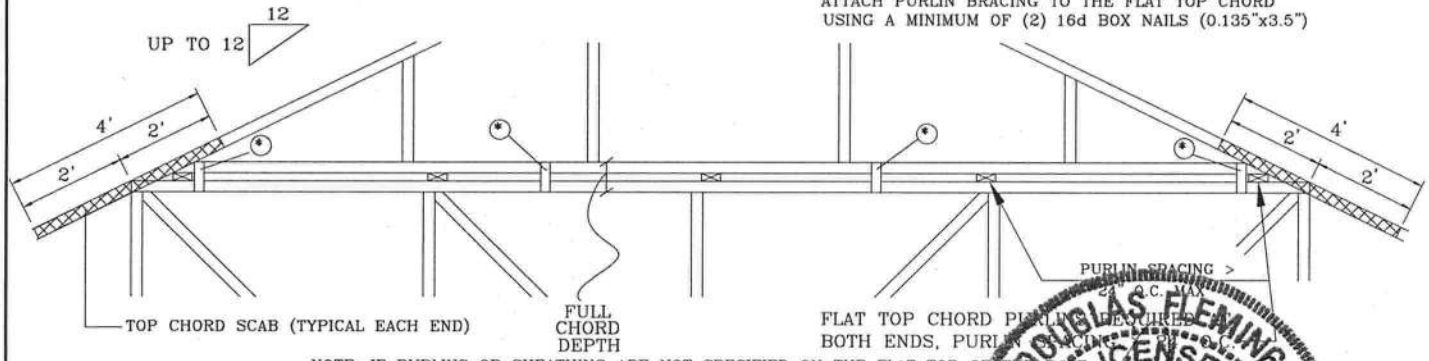

NOTE: IF PURLINS OR SHEATHING ARE NOT SPECIFIED ON THE FLAT TOP OF THE BASE TRUSS, PURLINS MUST BE INSTALLED AT 24" O.C. MAX. AND USE DETAIL A.

* IN ADDITION, PROVIDE CONNECTION WITH ONE OF THE FOLLOWING METHODS:

TRULOX
USE 3x8 TRULOX PLATES FOR 2x4 CHORD MEMBER, AND 3x10 TRULOX PLATES FOR 2x6 AND LARGER CHORD MEMBERS. ATTACH TO EACH FACE @ 8' O.C. WITH (4) 0.120"x1.375" NAILS INTO CAP BOTTOM CHORD AND (4) IN BASE TRUSS TOP CHORD. TRULOX PLATES MAY BE STAGGERED 4' O.C. FRONT TO BACK FACES.

APA RATED GUSSET
8"x8"x7/16" (MIN) APA RATED SHEATHING GUSSETS (EACH FACE). ATTACH @ 8' O.C. WITH (8) 6d COMMON (0.113"x2") NAILS PER GUSSET, (4) IN CAP BOTTOM CHORD AND (4) IN BASE TRUSS TOP CHORD. GUSSETS MAY BE STAGGERED 4' O.C. FRONT TO BACK FACES.

2x4 VERTICAL SCABS
2x4 SPF#2, FULL CHORD DEPTH SCABS (EACH FACE). ATTACH @ 8' O.C. WITH (6) 10d BOX NAILS (0.128"x3") PER SCAB, (3) IN CAP BOTTOM CHORD AND (3) IN BASE TRUSS TOP CHORD. SCABS MAY BE STAGGERED 4' O.C. FRONT TO BACK FACES

28PB WAVE PIGGYBACK PLATE
ONE 28PB WAVE PIGGYBACK PLATE TO EACH FACE @ 8' O.C. ATTACH TEETH TO PIGGYBACK AT TIME OF FABRICATION. ATTACH TO SUPPORTING TRUSS WITH (4) 0.120"x1.375" NAILS PER FACE PER PLY. PIGGYBACK PLATES MAY BE STAGGERED 4' O.C. FRONT TO BACK FACES.

ITW Building Components Group Inc.
Earth City, MO 63045

WARNING READ AND FOLLOW ALL NOTES ON THIS SHEET!
Trusses require extreme care in fabricating, handling, shipping, installing and bracing. Refer to and follow BCSI (Building Component Safety Information, by TPI and WTCA) for safety practices prior to performing these functions. Installers shall provide temporary bracing per BCSI. Unless noted otherwise, top chord shall have properly attached structural panels and bottom chord shall have a properly attached rigid ceiling. Locations shown for permanent lateral restraint of webs shall have bracing installed per BCSI sections B3 & B7. See this job's general notes page for more information.

IMPORTANT FURNISH COPY OF THIS DESIGN TO INSTALLATION CONTRACTOR.
ITW Building Components Group Inc. (ITWBCG) shall not be responsible for any deviation from this design, any failure to build the truss in conformance with TPI, or fabricating, handling, shipping, installing and bracing of trusses. ITWBCG connector plates are made of 20/18/16GA (W,H/S/K) ASTM A653 grade 33 ksi (K/W/H,S) galv. steel. Apply plates to each face of truss, positioned as shown above and on Joint Details. A seal on this drawing or cover page indicates acceptance and professional engineering responsibility solely for the truss component design shown. The suitability and use of this component for any building is the responsibility of the Building Designer per ANST/TPI 1 Sec. 2.
ITW-BCG: www.itwbcg.com; TPI: www.tpinst.com; WTCA: www.sbcindustry.com; ICC: www.iccsafe.org

DOUGLAS FLEMING LICENSE No. 66648 STATE OF FLORIDA PROFESSIONAL ENGINEER
Feb 24 '11
02/24/2011

SPACING 24.0"

REF	PIGGYBACK
DATE	03/15/10
DRWG	PB1200310