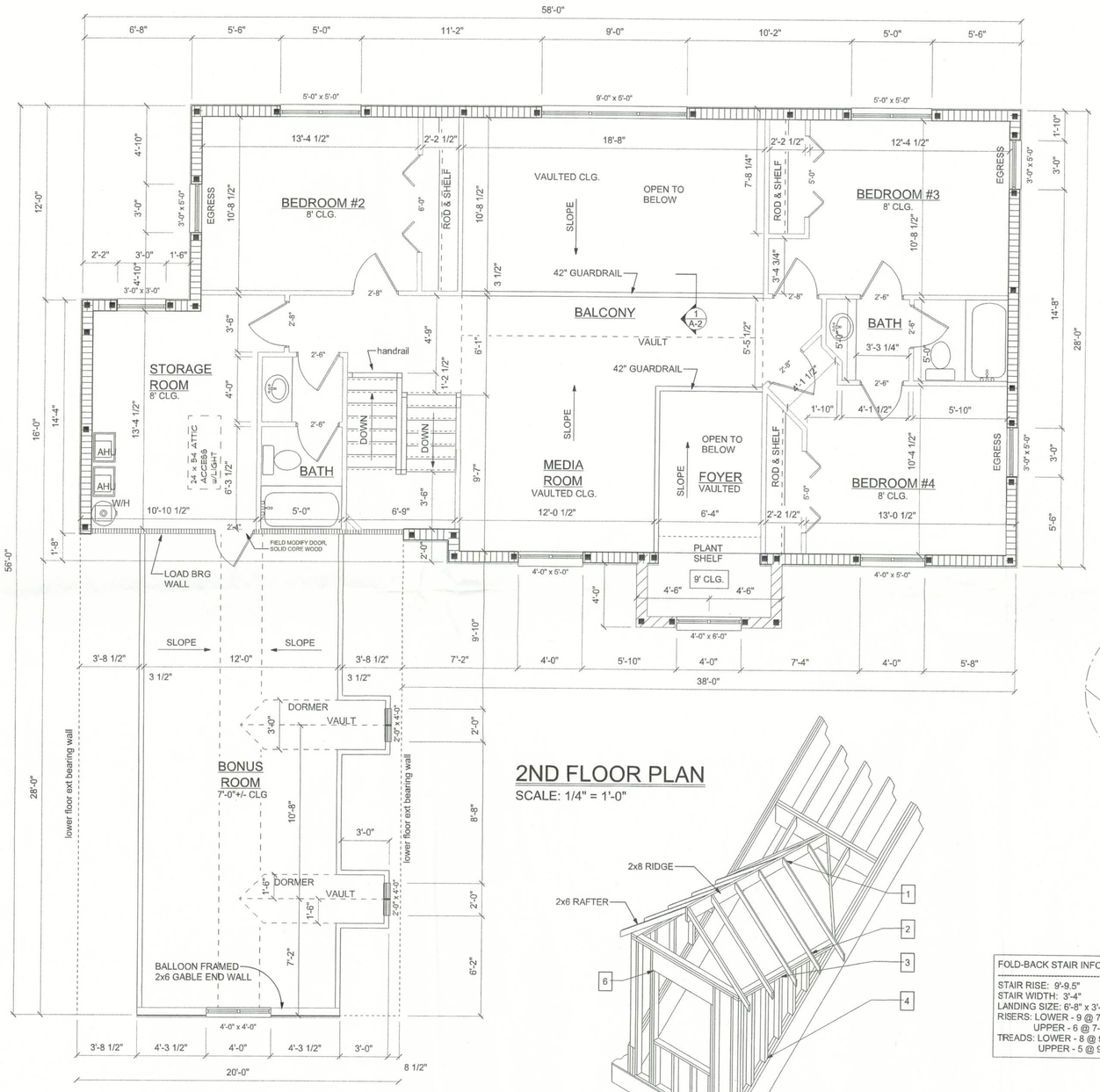

2ND FLOOR PLAN

SCALE: 1/4" = 1'-0"

2ND FLOOR OPENING SCHEDULE

PRODUCT CODE	SIZE	HINGE DIRECTION	COUNT
4068-2 BF	5'-0"	LR	2
6068-2 BF	6'-0"	RL	1
2068 colonial masonite	2'-8"	R	1
2668 colonial masonite	2'-6"	L	4
2668 colonial masonite	2'-6"	R	1
2868 colonial masonite	2'-8"	L	1
2868 colonial masonite	2'-8"	R	2
3068 colonial masonite	2'-4"	L	1
(2) SH 2040 capitol 650 series	4'-0" x 4'-0"	NN	1
(2) SH 2650 capitol 650 series	5'-0" x 5'-0"	NN	2
(3) SH 3050 capitol 650 series	9'-0" x 5'-0"	NNN	1
SH 4050 capitol 650 series	4'-0" x 5'-0"	NN	2
SH 4060 capitol 650 series	4'-0" x 6'-0"	NN	1
SH 3030 capitol 650 series	3'-0" x 3'-0"	N	1
SH 3050 capitol 650 series	3'-0" x 5'-0"	N	3

NOTE:

GUARDRAILS SHALL FORM A VERITCAL PROTECTIVE BARRIER NOT LESS THAN 42" HIGH. OPEN GAURDRAILS SHALL HAVE INTERMEDIATE RAILS OR ORNAMENTAL PATTERN SUCH THAT A 4-INCH DIAMETER SPHERE CANNOT PASS THROUGH ANY OPENING UP TO A HEIGHT OF 34 INCHES. A BOTTOM RAIL OR CURB SHALL BE PROVIDED THAT WILL REJECT THE PASSAGE OF A 2-INCH DIAMETER SPHERE.

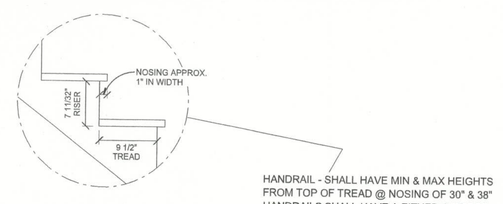

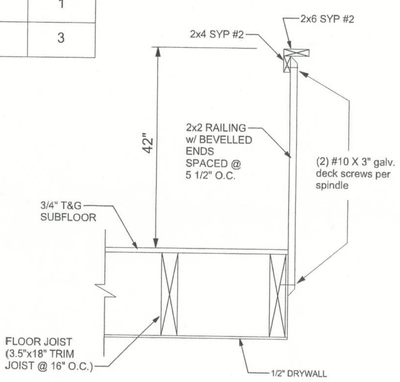

GUARDRAIL ATTACHMENT

(TYPICAL)

HANDRAIL - SHALL HAVE MIN & MAX HEIGHTS FROM TOP OF TREAD @ NOSING OF 30" & 38" HANDRAILS SHALL HAVE A EITHER A CROSS SECTION DIA. BETWEEN 1-1/4" TO 2" OR SHALL PROVIDE EQUIVALENT GRASPABILITY. CLEAR SPACE BETWEEN HANDRAIL & WALL SHALL BE A MIN. OF 1-1/2" INCHES.

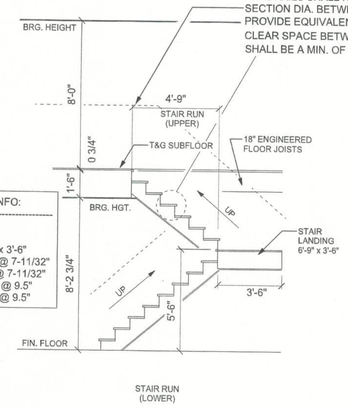

FOLD-BACK STAIR INFO:

STAIR RISE: 9'-9.5"
STAIR WIDTH: 3'-4"
LANDING SIZE: 6'-8" x 3'-6"
RISERS: LOWER - 9 @ 7-11/32"
UPPER - 6 @ 7-11/32"
TREADS: LOWER - 8 @ 9.5"
UPPER - 5 @ 9.5"

FOLD-BACK STAIR DETAIL

SCALE: 1/4" = 1'-0"

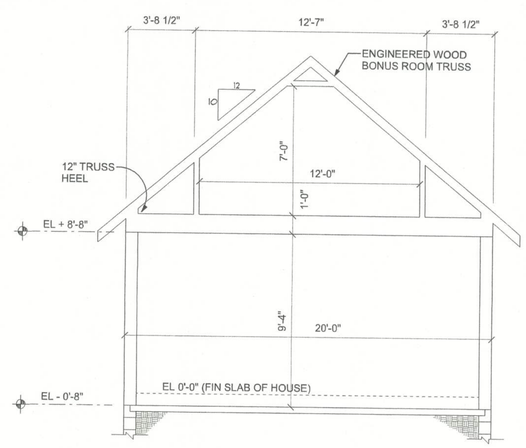

BONUS ROOM TRUSS DETAIL

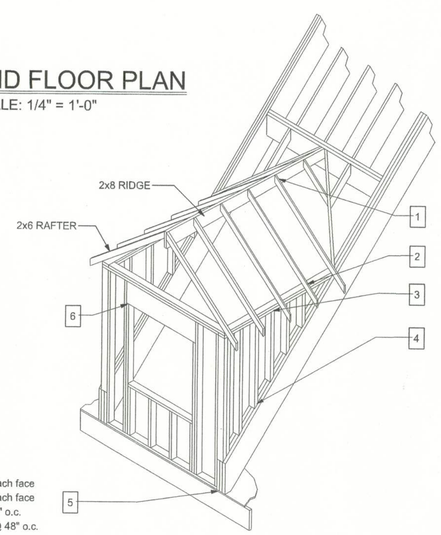

DORMER FRAMING

NTS

CONNECTOR SCHEDULE

(1)	RAFTER TO RIDGE	2-16d toe nails to each face
(2)	TRUSS/RAFTER TO TOP PLATE	2-16d toe nails to each face
(3)	TOP PLATE TO STUD	Simpson SP2 @ 48" o.c.
(4)	STUD TO GIRDER	Simpson LSTA12 @ 48" o.c.
(5)	GIRDER TO BEARING POINT	(2) Simpson MTS30
(6)	HEADER TO KING STUD	Simpson LSTA12 @ each end

NOTE:
*ALL LUMBER TO BE #2 SYP OR BETTER
*RAFTERS SPACING @ 24" O.C.
*STUDS SPACING @ 16" O.C.

PAUL BROWN RESIDENCE

161 NW MADISON STREET
SUITE #102
LAKE CITY, FL. 32055
(386)758-4209

CERTIFICATE OF AUTHORIZATION # 00008701

Freeman Design Group inc

DATE	DRAWN BY
6/21/05	J.T.D.

REVISIONS

SHEET A-2 OF 11

PROJECT NO.