DATE 09/26/2006

Columbia County Building Permit

This Permit Expires One Year From the Date of Issue

PERMIT
000025015

APPLICANT SUSAN FAIR PHONE 752-1711

ADDRESS 180 NW AMENITY COURT LAKE CITY FL 32055

OWNER CORNERSTONE DEVELOPERS PHONE 752-1711

ADDRESS 372 SW HEATHRIDGE DRIVE LAKE CITY FL 32055

CONTRACTOR BRYAN ZECHER PHONE 752-8653

LOCATION OF PROPERTY 90W, TR ON HEATHRIDGE DR., 1ST ON RIGHT

TYPE DEVELOPMENT SFD,UTILITY ESTIMATED COST OF CONSTRUCTION 75550.00

HEATED FLOOR AREA 1511.00 TOTAL AREA 2089.00 HEIGHT STORIES 1

FOUNDATION CONC WALLS FRAMED ROOF PITCH 6/12 FLOOR SLAB

LAND USE & ZONING RSF-2 MAX. HEIGHT 18

Minimum Set Back Requirments: STREET-FRONT 25.00 REAR 15.00 SIDE 10.00

NO. EX.D.U. 0 FLOOD ZONE X PP DEVELOPMENT PERMIT NO.

PARCEL ID 33-3S-16-02438-198 SUBDIVISION EMERALD COVE

LOT 98 BLOCK PHASE UNIT TOTAL ACRES

000001213		CGC 054575	Susan Fair
Culvert Permit No.	Culvert Waiver	Contractor's License Number	Applicant/Owner/Contractor

CULVERT	06-0846-N	BK	JH	Y
Driveway Connection	Septic Tank Number	LU & Zoning checked by	Approved for Issuance	New Resident

COMMENTS: ONE FOOT ABOVE THE ROAD, NOC ON FILE

Check # or Cash 2791

FOR BUILDING & ZONING DEPARTMENT ONLY

(footer/Slab)

Temporary Power _____ date/app. by Foundation _____ date/app. by Monolithic _____ date/app. by

Under slab rough-in plumbing _____ date/app. by Slab _____ date/app. by Sheathing/Nailing _____ date/app. by

Framing _____ date/app. by Rough-in plumbing above slab and below wood floor _____ date/app. by

Electrical rough-in _____ date/app. by Heat & Air Duct _____ date/app. by Peri. beam (Lintel) _____ date/app. by

Permanent power _____ date/app. by C.O. Final _____ date/app. by Culvert _____ date/app. by

M/H tie downs, blocking, electricity and plumbing _____ date/app. by Pool _____ date/app. by

Reconnection _____ date/app. by Pump pole _____ date/app. by Utility Pole _____ date/app. by

M/H Pole _____ date/app. by Travel Trailer _____ date/app. by Re-roof _____ date/app. by

BUILDING PERMIT FEE $ 380.00 CERTIFICATION FEE $ 10.45 SURCHARGE FEE $ 10.45

MISC. FEES $ 0.00 ZONING CERT. FEE $ 50.00 FIRE FEE $ 0.00 WASTE FEE $

FLOOD DEVELOPMENT FEE $ FLOOD ZONE FEE $ 25.00 CULVERT FEE $ 25.00 **TOTAL FEE** 500.90

INSPECTORS OFFICE _____ CLERKS OFFICE CH

NOTICE: IN ADDITION TO THE REQUIREMENTS OF THIS PERMIT, THERE MAY BE ADDITIONAL RESTRICTIONS APPLICABLE TO THIS PROPERTY THAT MAY BE FOUND IN THE PUBLIC RECORDS OF THIS COUNTY. AND THERE MAY BE ADDITIONAL PERMITS REQUIRED FROM OTHER GOVERNMENTAL ENTITIES SUCH AS WATER MANAGEMENT DISTRICTS, STATE AGENCIES, OR FEDERAL AGENCIES.

"WARNING TO OWNER: YOUR FAILURE TO RECORD A NOTICE OF COMMENCEMENT MAY RESULT IN YOUR PAYING TWICE FOR IMPROVEMENTS TO YOUR PROPERTY. IF YOU INTEND TO OBTAIN FINANCING, CONSULT WITH YOUR LENDER OR AN ATTORNEY BEFORE RECORDING YOUR NOTICE OF COMMENCEMENT."

This Permit Must Be Prominently Posted on Premises During Construction

PLEASE NOTIFY THE COLUMBIA COUNTY BUILDING DEPARTMENT AT LEAST 24 HOURS IN ADVANCE OF EACH INSPECTION, IN ORDER THAT IT MAY BE MADE WITHOUT DELAY OR INCONVIENCE, PHONE 758-1008. THIS PERMIT IS NOT VALID UNLESS THE WORK AUTHORIZED BY IT IS COMMENCED WITHIN 6 MONTHS AFTER ISSUANCE.

The Issuance of this Permit Does Not Waive Compliance by Permittee with Deed Restrictions.

PREPARED BY AND RETURN TO:

TERRY McDAVID
POST OFFICE BOX 1328
LAKE CITY, FL 32056-1328

Inst:2005026450 Date:10/24/2005 Time:13:06
Doc Stamp-Deed : 3628.80
MK DC,P.DeWitt Cason,Columbia County B:1062 P:2214

Property Appraiser's 02438-000
Identification Number 02421-000

TM File No: 05-652

WARRANTY DEED

This Warranty Deed, made this 18th day of October, 2005, BETWEEN D D P CORPORATION, a Florida corporation, whose post office address is 4158 US Highway 90 West, Lake City, Florida 32055, of the County of Columbia, State of Florida, grantor, and CORNERSTONE DEVELOPERS, LLC, a Florida Limited Liability Company, whose post office address is P.O. Box 815, Lake City, Florida 32056, grantee.

(Whenever used herein the terms "grantor" and "grantee" include all the parties to this instrument and the heirs, legal representatives and assigns of individuals, and the successors and assigns of corporations, trusts and trustees)

Witnesseth: that said grantor, for and in consideration of the sum of Ten Dollars ($10.00), and other good and valuable considerations to said grantor in hand paid by said grantee, the receipt whereof is hereby acknowledged, has granted, bargained and sold to the said grantee, and grantee's heirs and assigns forever, the following described land, situate, lying and being in Columbia County, Florida, to-wit:

Lots 65,66,67,68,71,72,73,74,93,94,95,96,97 & 98, Emerald Cove, Phase 1, a subdivision according to the plat thereof recorded in Plat Book 8, Pages 35-36, public records, Columbia County, Florida.

Together with all the tenements, hereditaments and appurtenances thereto belonging or in anywise appertaining.

To Have and to Hold, the same in fee simple forever.

And subject to taxes for the current year and later years and all valid easements and restrictions of record, if any, which are not hereby reimposed; and also subject to any claim, right, title or interest arising from any recorded instrument reserving, conveying, leasing, or otherwise alienating any interest in the oil, gas and other minerals. And grantor does warrant the title to said land and will defend the same against the lawful claims of all persons whomsoever, subject only to the exceptions set forth herein.

In Witness Whereof, grantor has hereunto set grantor's hand and seal the day and year first above written.

Signed, sealed and delivered in our presence:

DeEtte F. Brown
(Signature of First Witness)

DeEtte F. Brown
(Typed Name of First Witness)

Karen M Wright
(Signature of Second Witness)

KAREN M. Wright
(Typed Name of Second Witness)

D D P CORPORATION

BY: _____ (SEAL)
O. P. Daughtry, III,
President

(Corporate Seal)

STATE OF FLORIDA
COUNTY OF COLUMBIA

The foregoing instrument was acknowledged before me this 18th day of October, 2005, by O. P. Daughtry, III, President of D D P Corporation, a Florida corporation, on behalf of said corporation, who is/are personally known to me or who has/have produced _____ as identification and who did ~~not~~ take an oath.

Karen M Wright
Notary Public
Printed, typed, or stamped name:

My Commission Expires:

KAREN M. WRIGHT
Notary Public - State of Florida
My Commission Expires Jan 23, 2008
Commission # DD086234
Bonded By National Notary Assn.

Inst:2005026450 Date:10/24/2005 Time:13:06
Doc Stamp-Deed : 3628.80
_____DC,P.DeWitt Cason,Columbia County B:1062 P:2215

500.00 CK# 2791

Columbia County Building Permit Application

Revised 9-23-04

For Office Use Only Application # 0609.23 Date Received 9/8/06 By G Permit # 1213/25015

Application Approved by - Zoning Official BLK Date 9.09.06 Plans Examiner OK JTH Date 9-14-06

Flood Zone Approved Development Permit N/A Zoning RSF-2 Land Use Plan Map Category RES L-DEN

Comments NOC + ~~E. Health~~

Applicants Name SUSAN FAIR Phone 752-1711 fax: 487-0396

Address 180 NW AMENITY CT. LAKE CITY FL 32055

Owners Name CORNERSTONE DEVELOPERS Phone 752-1711

911 Address 372 SW HEATHRIDGE DRIVE LAKE CITY, FL. 32055

Contractors Name BRYAN ZECHER Phone 752-8653

Address PO BOX 815 LAKE CITY FL 32056

Fee Simple Owner Name & Address N.A.

Bonding Co. Name & Address N.A.

Architect/Engineer Name & Address MARK DISOSWAY PO BOX 868 LAKE CITY FL 32056

Mortgage Lenders Name & Address NA

Circle the correct power company - FL Power & Light - Clay Elec. - Suwannee Valley Elec. - Progressive Energy

Property ID Number 33-3S-16-02438-198 Estimated Cost of Construction 90,000.00

Subdivision Name EMERALD COVE Lot 98 Block ____ Unit ____ Phase ____

Driving Directions TAKE 90 TO SW HEATHRIDGE, T RIGHT. LOT IS 1ST ON RIGHT.

Type of Construction FRAME + BRICK Number of Existing Dwellings on Property 0

Total Acreage 1/2 acre Lot Size 1/2 acre Do you need a - Culvert Permit or Culvert Waiver or Have an Existing Drive

Actual Distance of Structure from Property Lines - Front 85' Side 12' Side 12' Rear 60'

Total Building Height 18' 9" Number of Stories 1 Heated Floor Area 1511 Roof Pitch 6/12

TOTAL 2089

Application is hereby made to obtain a permit to do work and installations as indicated. I certify that no work or installation has commenced prior to the issuance of a permit and that all work be performed to meet the standards of all laws regulating construction in this jurisdiction.

OWNERS AFFIDAVIT: I hereby certify that all the foregoing information is accurate and all work will be done in compliance with all applicable laws and regulating construction and zoning.

WARNING TO OWNER: YOUR FAILURE TO RECORD A NOTICE OF COMMENCMENT MAY RESULT IN YOU PAYING TWICE FOR IMPROVEMENTS TO YOUR PROPERTY. IF YOU INTEND TO OBTAIN FINANCING, CONSULT WITH YOUR LENDER OR ATTORNEY BEFORE RECORDING YOUR NOTICE OF COMMENCEMENT.

Owner Builder or Agent (Including Contractor)

Contractor Signature

Contractors License Number CBC054575

Competency Card Number

NOTARY STAMP/SEAL

STATE OF FLORIDA
COUNTY OF COLUMBIA

Sworn to (or affirmed) and subscribed before me this 08 day of September 20 06.

Personally known ✓ or Produced Identification ____

Notary Signature

MIRANDA M. KOON
MY COMMISSION #DD527854
EXPIRES: MAR 13, 2010
Bonded by 1st State Insurance

FROM :COLUMBIA CO BUILDING + ZONING FAX NO. :386 752 2160 Jun. 16 2006 09:00AM P2

9/15/06

Lot 98, Emerald Cove

STATE OF FLORIDA
DEPARTMENT OF HEALTH
APPLICATION FOR ONSITE SEWAGE DISPOSAL SYSTEM CONSTRUCTION PERMIT

Permit Application Number 06-0846N

---------- PART II - SITEPLAN ----------

Scale: 1 inch = 50 feet.

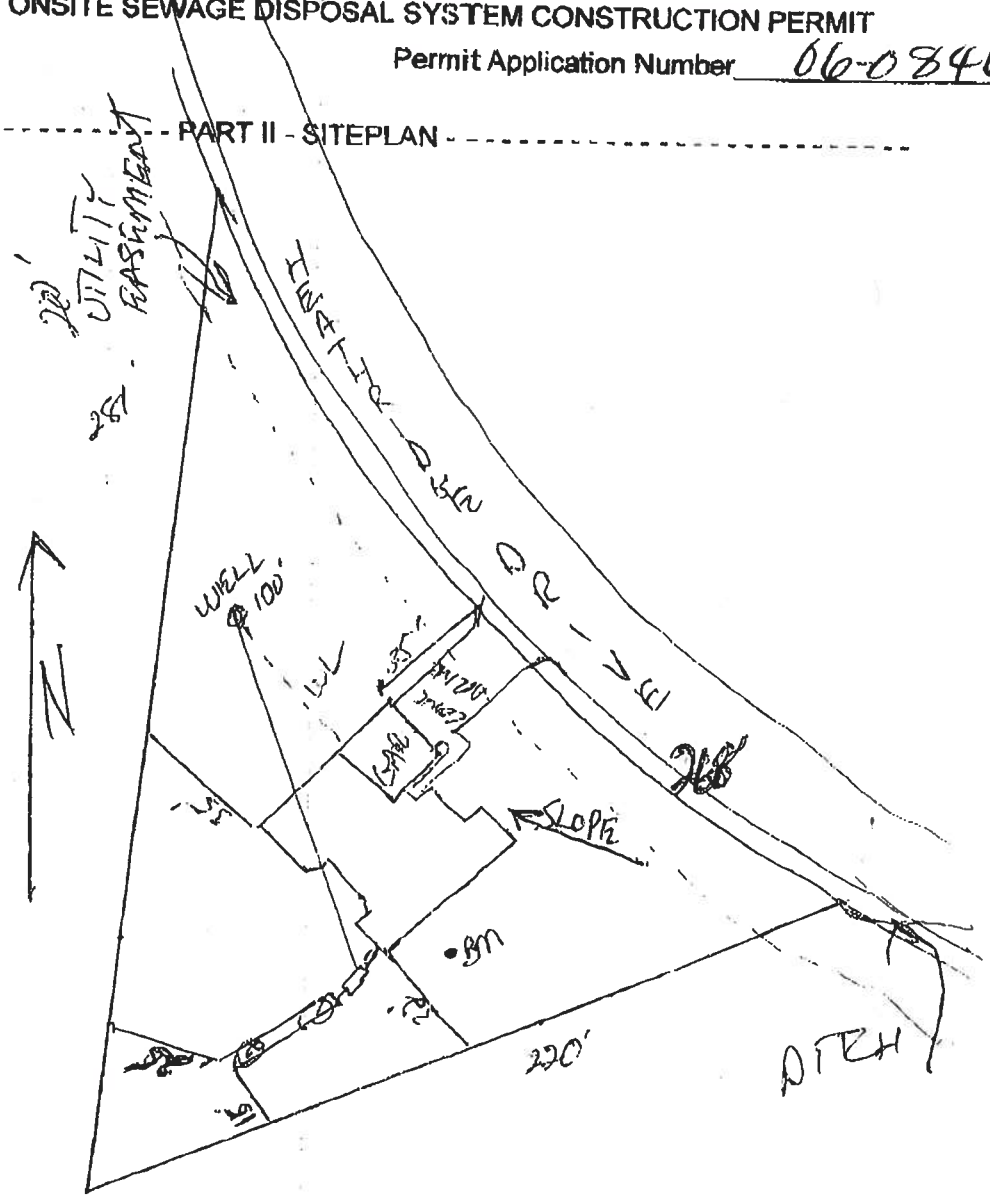

Notes: _____

Site Plan submitted by _____

Plan Approved ✓ Not Approved ____

By _____ Columbia County Health Department

MASTER CONTRACTOR

Date 9/22/06

ALL CHANGES MUST BE APPROVED BY THE COUNTY HEALTH DEPARTMENT

DH 4015, 10/96 (Replaces HRS-H Form 4016 which may be used)
(Stock Number: 5744-002-4015-6)

EMERALD COVE
PHASE 1
LOT 98
SITE PLAN

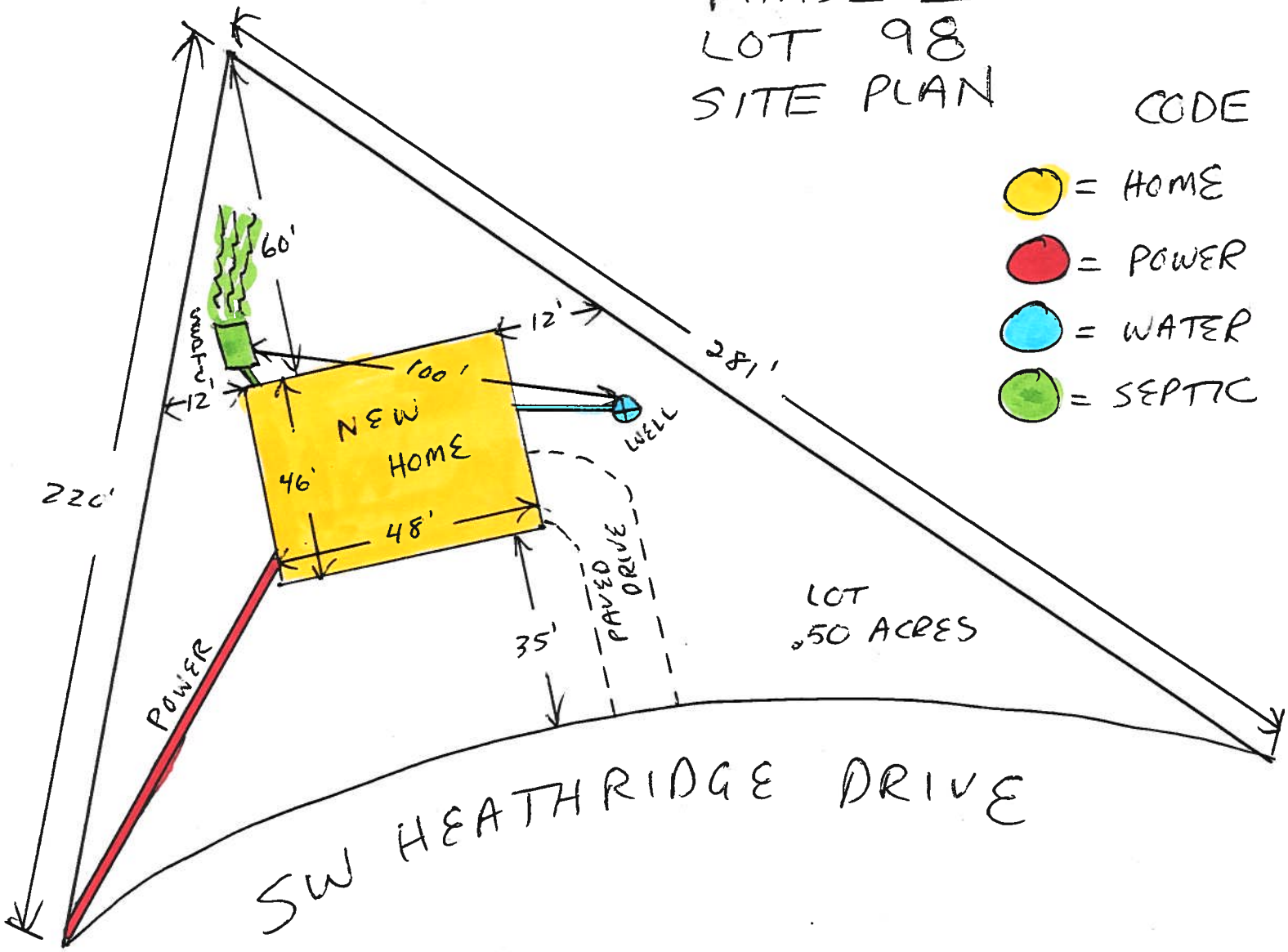

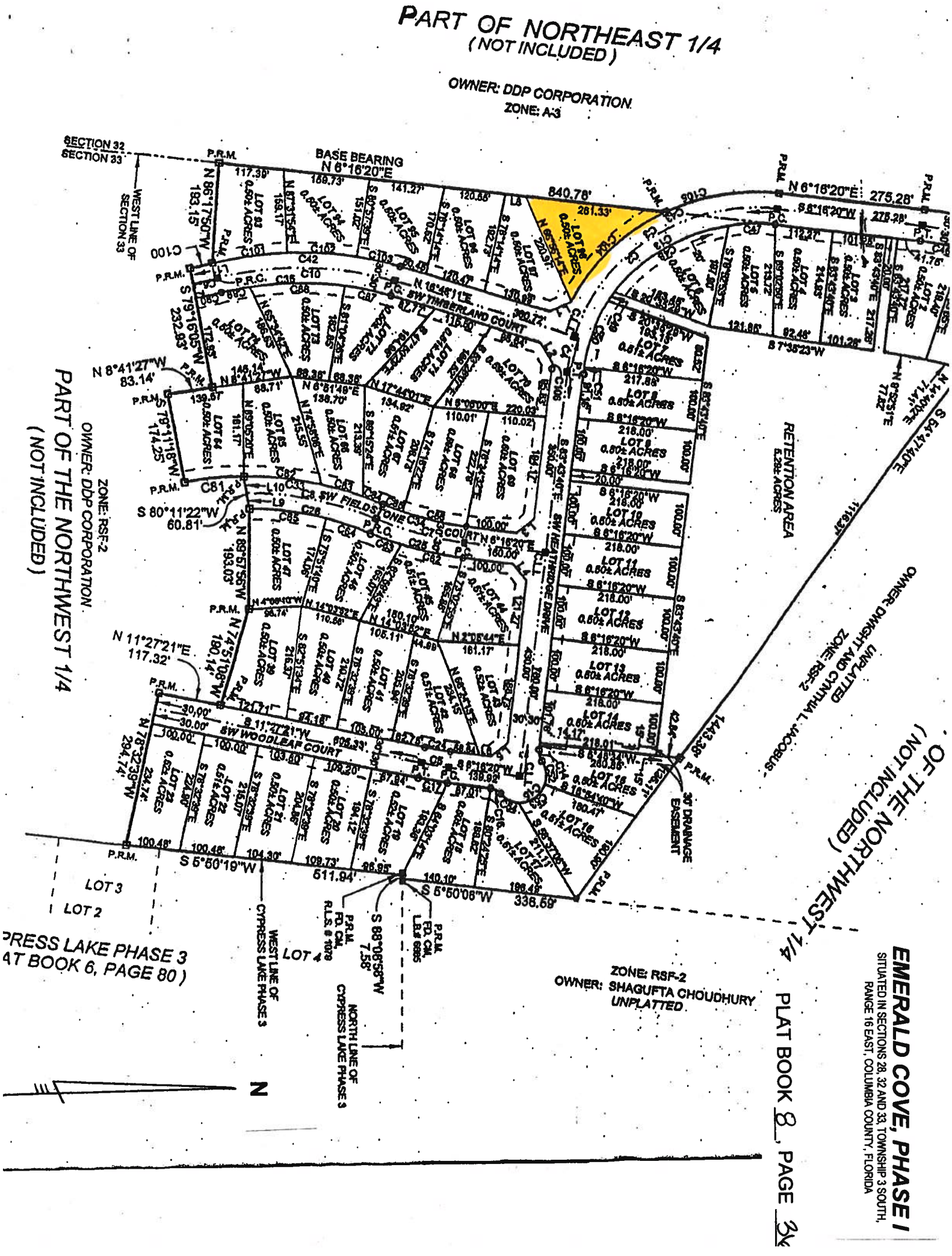
PART OF NORTHEAST 1/4
(NOT INCLUDED)
OWNER: DDP CORPORATION
ZONE: A-3
SECTION 32
SECTION 33
WEST LINE OF SECTION 33
BASE BEARING
N 6°16'20"E
N 6°16'20"E 275.28'
840.78'
281.33'
S 7°35'23"W
S 64°47'40"E
RETENTION AREA
0.28± ACRES
SW TIMBERLAND COURT
SW FIELDSTONE COURT
SW WOODLEAF COURT
SW HEATHERIDGE DRIVE
30' DRAINAGE EASEMENT
UNPLATTED
OWNER: DMMGHT AND CYNTHIA L. JACOBUS
ZONE: RSF-2
PART OF THE NORTHWEST 1/4
(NOT INCLUDED)
ZONE: RSF-2
OWNER: DDP CORPORATION
S 5°50'19"W
S 5°50'06"W
336.68'
S 88°08'58"W
7.58'
LOT 3
LOT 2
LOT 4
PRESS LAKE PHASE 3
AT BOOK 6, PAGE 80)
WEST LINE OF CYPRESS LAKE PHASE 3
NORTH LINE OF CYPRESS LAKE PHASE 3
ZONE: RSF-2
OWNER: SHAGUFTA CHOUDHURY
UNPLATTED
N
EMERALD COVE, PHASE I
SITUATED IN SECTIONS 28, 32 AND 33, TOWNSHIP 3 SOUTH, RANGE 16 EAST, COLUMBIA COUNTY, FLORIDA
PLAT BOOK 8, PAGE 34

HALL'S PUMP & WELL SERVICE, INC.

SPECIALIZING IN 4"-6" WELLS

DONALD AND MARY HALL
OWNERS

PHONE (904) 752-1654
FAX (904) 755-7022
~~XXXXXXXXXXXXXXXXXX~~
LAKE CITY, FLORIDA 32055
904 NW Main Blvd.

June 12, 2002

NOTICE TO ALL CONTRACTORS

Please be advised that due to the new building codes we will use a large capacity diaphram tank on all new wells. This will insure a minimum of one (1) minute draw down or one (1) minute refill. If a smaller diaphram tank is used then we will install a cycle stop valve which will produce the same results.

If you have any questions please feel free to call our office anytime.

Thank you,

Donald D. Hall
DDH/jk

FORM 600A-2004 EnergyGauge® 4.1

FLORIDA ENERGY EFFICIENCY CODE FOR BUILDING CONSTRUCTION

Florida Department of Community Affairs

Residential Whole Building Performance Method A

Project Name:	**608234TheSamuelModel**	Builder:	**Bryan Zecher Construction**
Address:	**Lot: 98, Sub: Emerald Cove, Plat:**	Permitting Office:	Columbia
City, State:	**Lake City, FL**	Permit Number:	25015
Owner:	**Model Home**	Jurisdiction Number:	221000
Climate Zone:	**North**		

1. New construction or existing	New	
2. Single family or multi-family	Single family	
3. Number of units, if multi-family	1	
4. Number of Bedrooms	3	
5. Is this a worst case?	Yes	
6. Conditioned floor area (ft²)	1511 ft²	
7. Glass type[1] and area: (Label reqd. by 13-104.4.5 if not default)		
a. U-factor: (or Single or Double DEFAULT) 7a.	Description Area (Dble Default) 211.0 ft²	
b. SHGC: (or Clear or Tint DEFAULT) 7b.	(Clear) 211.0 ft²	
8. Floor types		
a. Slab-On-Grade Edge Insulation	R=0.0, 196.0(p) ft	
b. N/A		
c. N/A		
9. Wall types		
a. Frame, Wood, Adjacent	R=13.0, 204.0 ft²	
b. Frame, Wood, Exterior	R=13.0, 1073.0 ft²	
c. N/A		
d. N/A		
e. N/A		
10. Ceiling types		
a. Under Attic	R=30.0, 1558.0 ft²	
b. N/A		
c. N/A		
11. Ducts		
a. Sup: Unc. Ret: Unc. AH: Garage	Sup. R=6.0, 150.0 ft	
b. N/A		

12. Cooling systems		
a. Central Unit	Cap: 34.0 kBtu/hr	
	SEER: 12.00	
b. N/A		
c. N/A		
13. Heating systems		
a. Electric Heat Pump	Cap: 34.0 kBtu/hr	
	HSPF: 7.60	
b. N/A		
c. N/A		
14. Hot water systems		
a. Electric Resistance	Cap: 40.0 gallons	
	EF: 0.93	
b. N/A		
c. Conservation credits (HR-Heat recovery, Solar DHP-Dedicated heat pump)		
15. HVAC credits (CF-Ceiling fan, CV-Cross ventilation, HF-Whole house fan, PT-Programmable Thermostat, MZ-C-Multizone cooling, MZ-H-Multizone heating)		

Glass/Floor Area: 0.14

Total as-built points: 23079
Total base points: 23671

PASS

I hereby certify that the plans and specifications covered by this calculation are in compliance with the Florida Energy Code.

PREPARED BY: _____

DATE: 9-7-06

I hereby certify that this building, as designed, is in compliance with the Florida Energy Code.

OWNER/AGENT: _____

DATE: 9-8-06

Review of the plans and specifications covered by this calculation indicates compliance with the Florida Energy Code. Before construction is completed this building will be inspected for compliance with Section 553.908 Florida Statutes.

GREAT SEAL OF THE STATE OF FLORIDA — IN GOD WE TRUST

BUILDING OFFICIAL: _____

DATE: _____

1 Predominant glass type. For actual glass type and areas, see Summer & Winter Glass output on pages 2&4.

SUMMER CALCULATIONS

Residential Whole Building Performance Method A - Details

ADDRESS: **Lot: 98, Sub: Emerald Cove, Plat: , Lake City, FL,** PERMIT #:

BASE

GLASS TYPES

.18 X	Conditioned Floor Area	BSPM	= Points
.18	1511.0	20.04	5450.5

AS-BUILT

Type/SC	Overhang Ornt	Len	Hgt	Area	X SPM	X SOF	= Points
Double, Clear	S	2.0	5.5	45.0	35.87	0.75	1208.6
Double, Clear	SW	6.5	5.5	10.0	40.16	0.45	182.5
Double, Clear	S	12.0	5.3	45.0	35.87	0.44	716.2
Double, Clear	SE	8.5	7.0	10.0	42.75	0.46	195.4
Double, Clear	W	2.0	1.5	3.0	38.52	0.47	54.1
Double, Clear	N	9.5	7.5	6.0	19.20	0.67	77.7
Double, Clear	N	2.0	5.5	30.0	19.20	0.89	510.4
Double, Clear	N	2.0	8.0	30.0	19.20	0.94	540.7
Double, Clear	E	1.5	1.5	2.0	42.06	0.52	43.6
Double, Clear	E	1.5	5.5	30.0	42.06	0.90	1131.0
As-Built Total:				**211.0**			**4660.1**

WALL TYPES	Area	X BSPM	= Points
Adjacent	204.0	0.70	142.8
Exterior	1073.0	1.70	1824.1
Base Total:	**1277.0**		**1966.9**

Type	R-Value	Area	X SPM	= Points
Frame, Wood, Adjacent	13.0	204.0	0.60	122.4
Frame, Wood, Exterior	13.0	1073.0	1.50	1609.5
As-Built Total:		**1277.0**		**1731.9**

DOOR TYPES	Area	X BSPM	= Points
Adjacent	20.0	1.60	32.0
Exterior	40.0	4.10	164.0
Base Total:	**60.0**		**196.0**

Type	Area	X SPM	= Points
Exterior Insulated	20.0	4.10	82.0
Exterior Insulated	20.0	4.10	82.0
Adjacent Insulated	20.0	1.60	32.0
As-Built Total:	**60.0**		**196.0**

CEILING TYPES	Area	X BSPM	= Points
Under Attic	1511.0	1.73	2614.0
Base Total:	**1511.0**		**2614.0**

Type	R-Value	Area	X SPM X SCM	= Points
Under Attic	30.0	1558.0	1.73 X 1.00	2695.3
As-Built Total:		**1558.0**		**2695.3**

FLOOR TYPES	Area	X BSPM	= Points
Slab	196.0(p)	-37.0	-7252.0
Raised	0.0	0.00	0.0
Base Total:			**-7252.0**

Type	R-Value	Area	X SPM	= Points
Slab-On-Grade Edge Insulation	0.0	196.0(p	-41.20	-8075.2
As-Built Total:		**196.0**		**-8075.2**

INFILTRATION	Area	X BSPM	= Points
	1511.0	10.21	15427.3

	Area	X SPM	= Points
	1511.0	10.21	15427.3

SUMMER CALCULATIONS

Residential Whole Building Performance Method A - Details

ADDRESS: **Lot: 98, Sub: Emerald Cove, Plat: , Lake City, FL,** PERMIT #:

BASE				AS-BUILT							
Summer Base Points: 18402.7				**Summer As-Built Points:**							**16635.5**
Total Summer Points	X System Multiplier	=	Cooling Points	Total Component (System - Points)	X Cap Ratio	X Duct Multiplier (DM x DSM x AHU)	X System Multiplier	X Credit Multiplier	= Cooling Points		
				(sys 1: Central Unit 34000 btuh ,SEER/EFF(12.0) Ducts:Unc(S),Unc(R),Gar(AH),R6.0(INS)							
				16635	1.00	(1.09 x 1.147 x 1.00)	0.284	1.000	5915.3		
18402.7	**0.4266**		**7850.6**	**16635.5**	**1.00**	**1.250**	**0.284**	**1.000**	**5915.3**		

WINTER CALCULATIONS

Residential Whole Building Performance Method A - Details

ADDRESS: **Lot: 98, Sub: Emerald Cove, Plat: , Lake City, FL,** PERMIT #:

BASE

GLASS TYPES

.18 X	Conditioned Floor Area	BWPM	= Points
.18	1511.0	12.74	3465.0

AS-BUILT

Type/SC	Overhang Ornt	Len	Hgt	Area X	WPM X	WOF	= Points
Double, Clear	S	2.0	5.5	45.0	13.30	1.32	787.4
Double, Clear	SW	6.5	5.5	10.0	16.74	1.70	285.1
Double, Clear	S	12.0	5.3	45.0	13.30	3.57	2133.3
Double, Clear	SE	8.5	7.0	10.0	14.71	2.13	312.7
Double, Clear	W	2.0	1.5	3.0	20.73	1.20	74.3
Double, Clear	N	9.5	7.5	6.0	24.58	1.02	150.6
Double, Clear	N	2.0	5.5	30.0	24.58	1.01	741.4
Double, Clear	N	2.0	8.0	30.0	24.58	1.00	739.1
Double, Clear	E	1.5	1.5	2.0	18.79	1.29	48.3
Double, Clear	E	1.5	5.5	30.0	18.79	1.04	587.1
As-Built Total:				**211.0**			**5859.3**

WALL TYPES	Area X	BWPM	= Points
Adjacent	204.0	3.60	734.4
Exterior	1073.0	3.70	3970.1
Base Total:	**1277.0**		**4704.5**

Type	R-Value	Area X	WPM	= Points
Frame, Wood, Adjacent	13.0	204.0	3.30	673.2
Frame, Wood, Exterior	13.0	1073.0	3.40	3648.2
As-Built Total:		**1277.0**		**4321.4**

DOOR TYPES	Area X	BWPM	= Points
Adjacent	20.0	8.00	160.0
Exterior	40.0	8.40	336.0
Base Total:	**60.0**		**496.0**

Type	Area X	WPM	= Points
Exterior Insulated	20.0	8.40	168.0
Exterior Insulated	20.0	8.40	168.0
Adjacent Insulated	20.0	8.00	160.0
As-Built Total:	**60.0**		**496.0**

CEILING TYPES	Area X	BWPM	= Points
Under Attic	1511.0	2.05	3097.6
Base Total:	**1511.0**		**3097.6**

Type	R-Value	Area X	WPM X WCM	= Points
Under Attic	30.0	1558.0	2.05 X 1.00	3193.9
As-Built Total:		**1558.0**		**3193.9**

FLOOR TYPES	Area X	BWPM	= Points
Slab	196.0(p)	8.9	1744.4
Raised	0.0	0.00	0.0
Base Total:			**1744.4**

Type	R-Value	Area X	WPM	= Points
Slab-On-Grade Edge Insulation	0.0	196.0(p	18.80	3684.8
As-Built Total:		**196.0**		**3684.8**

INFILTRATION	Area X	BWPM	= Points
	1511.0	-0.59	-891.5

	Area X	WPM	= Points
	1511.0	-0.59	-891.5

WINTER CALCULATIONS

Residential Whole Building Performance Method A - Details

ADDRESS: **Lot: 98, Sub: Emerald Cove, Plat: , Lake City, FL,** PERMIT #:

BASE			AS-BUILT						
Winter Base Points:		**12616.0**	**Winter As-Built Points:**						**16663.9**
Total Winter Points	X System Multiplier	= Heating Points	Total Component (System - Points)	X Cap Ratio	X Duct Multiplier (DM x DSM x AHU)	X System Multiplier	X Credit Multiplier	= Heating Points	
			(sys 1: Electric Heat Pump 34000 btuh ,EFF(7.6) Ducts:Unc(S),Unc(R),Gar(AH),R6.0						
			16663.9	1.000	(1.069 x 1.169 x 1.00)	0.449	1.000	9343.5	
12616.0	**0.6274**	**7915.3**	**16663.9**	**1.00**	**1.250**	**0.449**	**1.000**	**9343.5**	

WATER HEATING & CODE COMPLIANCE STATUS

Residential Whole Building Performance Method A - Details

ADDRESS: **Lot: 98, Sub: Emerald Cove, Plat: , Lake City, FL,** PERMIT #:

BASE					AS-BUILT							
WATER HEATING												
Number of Bedrooms	X	Multiplier	=	Total	Tank Volume	EF	Number of Bedrooms	X	Tank Ratio	X Multiplier	X Credit Multiplier	= Total
3		2635.00		7905.0	40.0	0.93	3		1.00	2606.67	1.00	7820.0
					As-Built Total:							**7820.0**

CODE COMPLIANCE STATUS

BASE				AS-BUILT			
Cooling Points +	Heating Points +	Hot Water Points =	Total Points	Cooling Points +	Heating Points +	Hot Water Points =	Total Points
7851	**7915**	**7905**	**23671**	**5915**	**9343**	**7820**	**23079**

PASS

Code Compliance Checklist

Residential Whole Building Performance Method A - Details

ADDRESS: **Lot: 98, Sub: Emerald Cove, Plat: , Lake City, FL,** PERMIT #:

6A-21 INFILTRATION REDUCTION COMPLIANCE CHECKLIST

COMPONENTS	SECTION	REQUIREMENTS FOR EACH PRACTICE	CHECK
Exterior Windows & Doors	606.1.ABC.1.1	Maximum:.3 cfm/sq.ft. window area; .5 cfm/sq.ft. door area.	
Exterior & Adjacent Walls	606.1.ABC.1.2.1	Caulk, gasket, weatherstrip or seal between: windows/doors & frames, surrounding wall; foundation & wall sole or sill plate; joints between exterior wall panels at corners; utility penetrations; between wall panels & top/bottom plates; between walls and floor. EXCEPTION: Frame walls where a continuous infiltration barrier is installed that extends from, and is sealed to, the foundation to the top plate.	
Floors	606.1.ABC.1.2.2	Penetrations/openings >1/8" sealed unless backed by truss or joint members. EXCEPTION: Frame floors where a continuous infiltration barrier is installed that is sealed to the perimeter, penetrations and seams.	
Ceilings	606.1.ABC.1.2.3	Between walls & ceilings; penetrations of ceiling plane of top floor; around shafts, chases, soffits, chimneys, cabinets sealed to continuous air barrier; gaps in gyp board & top plate; attic access. EXCEPTION: Frame ceilings where a continuous infiltration barrier is installed that is sealed at the perimeter, at penetrations and seams.	
Recessed Lighting Fixtures	606.1.ABC.1.2.4	Type IC rated with no penetrations, sealed; or Type IC or non-IC rated, installed inside a sealed box with 1/2" clearance & 3" from insulation; or Type IC rated with < 2.0 cfm from conditioned space, tested.	
Multi-story Houses	606.1.ABC.1.2.5	Air barrier on perimeter of floor cavity between floors.	
Additional Infiltration reqts	606.1.ABC.1.3	Exhaust fans vented to outdoors, dampers; combustion space heaters comply with NFPA, have combustion air.	

6A-22 OTHER PRESCRIPTIVE MEASURES (must be met or exceeded by all residences.)

COMPONENTS	SECTION	REQUIREMENTS	CHECK
Water Heaters	612.1	Comply with efficiency requirements in Table 612.1.ABC.3.2. Switch or clearly marked circuit breaker (electric) or cutoff (gas) must be provided. External or built-in heat trap required.	
Swimming Pools & Spas	612.1	Spas & heated pools must have covers (except solar heated). Non-commercial pools must have a pump timer. Gas spa & pool heaters must have a minimum thermal efficiency of 78%.	
Shower heads	612.1	Water flow must be restricted to no more than 2.5 gallons per minute at 80 PSIG.	
Air Distribution Systems	610.1	All ducts, fittings, mechanical equipment and plenum chambers shall be mechanically attached, sealed, insulated, and installed in accordance with the criteria of Section 610. Ducts in unconditioned attics: R-6 min. insulation.	
HVAC Controls	607.1	Separate readily accessible manual or automatic thermostat for each system.	
Insulation	604.1, 602.1	Ceilings-Min. R-19. Common walls-Frame R-11 or CBS R-3 both sides. Common ceiling & floors R-11.	

ENERGY PERFORMANCE LEVEL (EPL) DISPLAY CARD

ESTIMATED ENERGY PERFORMANCE SCORE* = 83.6

The higher the score, the more efficient the home.

Model Home, Lot: 98, Sub: Emerald Cove, Plat: , Lake City, FL,

1. New construction or existing	New	
2. Single family or multi-family	Single family	
3. Number of units, if multi-family	1	
4. Number of Bedrooms	3	
5. Is this a worst case?	Yes	
6. Conditioned floor area (ft²)	1511 ft²	
7. Glass type[1] and area: (Label reqd. by 13-104.4.5 if not default)		
a. U-factor: (or Single or Double DEFAULT) 7a.	Description Area (Dble Default) 211.0 ft²	
b. SHGC: (or Clear or Tint DEFAULT) 7b.	(Clear) 211.0 ft²	
8. Floor types		
a. Slab-On-Grade Edge Insulation	R=0.0, 196.0(p) ft	
b. N/A		
c. N/A		
9. Wall types		
a. Frame, Wood, Adjacent	R=13.0, 204.0 ft²	
b. Frame, Wood, Exterior	R=13.0, 1073.0 ft²	
c. N/A		
d. N/A		
e. N/A		
10. Ceiling types		
a. Under Attic	R=30.0, 1558.0 ft²	
b. N/A		
c. N/A		
11. Ducts		
a. Sup: Unc. Ret: Unc. AH: Garage	Sup. R=6.0, 150.0 ft	
b. N/A		
12. Cooling systems		
a. Central Unit	Cap: 34.0 kBtu/hr SEER: 12.00	
b. N/A		
c. N/A		
13. Heating systems		
a. Electric Heat Pump	Cap: 34.0 kBtu/hr HSPF: 7.60	
b. N/A		
c. N/A		
14. Hot water systems		
a. Electric Resistance	Cap: 40.0 gallons EF: 0.93	
b. N/A		
c. Conservation credits (HR-Heat recovery, Solar DHP-Dedicated heat pump)		
15. HVAC credits (CF-Ceiling fan, CV-Cross ventilation, HF-Whole house fan, PT-Programmable Thermostat, MZ-C-Multizone cooling, MZ-H-Multizone heating)		

I certify that this home has complied with the Florida Energy Efficiency Code For Building Construction through the above energy saving features which will be installed (or exceeded) in this home before final inspection. Otherwise, a new EPL Display Card will be completed based on installed Code compliant features.

Builder Signature: _____ Date: 9-8-06

Address of New Home: 372 SW HEATHRIDGE DRIVE City/FL Zip: LAKE CITY FL 32055

NOTE: The home's estimated energy performance score is only available through the FLA/RES computer program. This is not a Building Energy Rating. If your score is 80 or greater (or 86 for a US EPA/DOE EnergyStar™ designation), your home may qualify for energy efficiency mortgage (EEM) incentives if you obtain a Florida Energy Gauge Rating. Contact the Energy Gauge Hotline at 321/638-1492 or see the Energy Gauge web site at www.fsec.ucf.edu for information and a list of certified Raters. For information about Florida's Energy Efficiency Code For Building Construction, contact the Department of Community Affairs at 850/487-1824.

1 Predominant glass type. For actual glass type and areas, see Summer & Winter Glass output on pages 2&4.

Prepared by and after
recording return to:

William L. Joel
Stoneburner Berry & Simmons, P.A.
841 Prudential Drive, Suite 1400
Jacksonville, FL 32207

Permit No. _____
Tax Folio No. _____

NOTICE OF COMMENCEMENT

STATE OF FLORIDA

COUNTY OF COLUMBIA

Inst:2006022196 Date:09/18/2006 Time:11:23
_____ DC,P.DeWitt Cason,Columbia County B:1096 P:901

The undersigned hereby gives notice that improvements will be made to certain real property, and in accordance with section 713 Florida Statutes, the following information is provided in this notice of commencement.

1. Description of property (legal description and address, if available):

   Lot 98, Emerald Cove, Phase I, according to map or plat thereof as recorded in Plat Book 8, Pages 35 and 36, Public Records of Columbia County, Florida.

2. General description of improvements: Construction of residential dwellings

3. Owner Information:

   (a) Name and Address: Cornerstone Developers, LLC, a Florida limited liability company
   180 NW Amenity Court
   Lake City, Florida 32025

   (b) Owner's interest in the site of the improvements (if other than fee simple title holder):

   (c) Name and Address of fee simple title holder (if other than owner):

4. Contractor:

   (a) Name and Address: Bryan Zecher Construction Inc.
   465 NW Orange Street
   Lake City, FL 32055

   (b) Phone No. 386-752-8653 Fax No. _____ (Optional, if service by fax is acceptable)

5. Surety on any payment bond: N/A

   (a) Name and Address:
   (b) Phone No. _____ Fax No. _____ (Optional, if service by fax is acceptable)
   (c) Amount of bond $_____

6. Lender making loan for the construction of the improvements:

(a) Name and Address: First Horizon Home Loan Corporation
1051 Deerwood Park Boulevard
Building 200, Suite 115
Jacksonville, FL 32256
Attn: James J. O'Connor, Jr.

(b) Phone No. 904-998-5300 Fax No. _____ (Optional, if service by fax is acceptable)

7. Persons within the State of Florida designated by owner upon whom notices may be served as provided by Section 713.13(1)(a)7, Florida Statutes:

(a) Name and Address: Cornerstone Developers, LLC a Florida limited liability company
180 NW Amenity Court
Lake City, Florida 32025

(b) Phone No. 386- 752-1711 Fax No. _____ (Optional, if service by fax is acceptable)

8. In addition to himself, Owner designates the following person to receive a copy of the lienor's notice as provided in Section 713.13(1)(b), Florida Statute:

(a) Name and Address: James J. O'Connor, Jr.
First Horizon Home Loan Corporation
1051 Deerwood Park Boulevard
Building 200, Suite 115
Jacksonville, FL 32256

(b) Phone No. 904-998-5300 Fax No. _____ (Optional, if service by fax is acceptable)

9. Expiration date of notice of commencement (the expiration date is one (1) year from the date of recording unless a different date is specified):

CORNERSTONE DEVELOPERS, LLC

By: _____
Frank Soucinek, its sole Manager (SEAL)

(OWNER)

Sworn to and Subscribed before me this 13 day of Sept, 2006, by Frank Soucinek, the Manager of Cornerstone Developers, LLC. He is personally known or has produced _____ as identification.

Susan Ann Fair
Notary Public, State and County Aforesaid
Print Name:
My Commission Expires:
My Commission No.:
(NOTARIAL SEAL)

SUSAN ANN FAIR
MY COMMISSION # DD 342845
EXPIRES: August 14, 2008
Bonded Thru Notary Public Underwriters

POST A CERTIFIED COPY OF THE RECORDED NOTICE ON CONSTRUCTION SITE

Inst:2006022196 Date:09/18/2006 Time:11:23
DC,P.DeWitt Cason,Columbia County B:1096 P:902

Columbia County Building Department
Culvert Permit

Culvert Permit No.
000001213

DATE 09/26/2006 PARCEL ID # 33-3S-16-02438-198

APPLICANT SUSAN FAIR PHONE 752-1711

ADDRESS 180 NW AMENITY COURT LAKE CITY FL 32055

OWNER CORNERSTONE DEVELOPERS PHONE 752-1711

ADDRESS 372 SW HEATHRIDGE DRIVE LAKE CITY FL 32055

CONTRACTOR BRYAN ZECHER PHONE 752-8653

LOCATION OF PROPERTY 90W, TR ON HEATHRIDGE DR., 1ST ON RIGHT

SUBDIVISION/LOT/BLOCK/PHASE/UNIT EMERALD COVE 98

SIGNATURE Susan Fair

INSTALLATION REQUIREMENTS

[X] Culvert size will be 18 inches in diameter with a total lenght of 32 feet, leaving 24 feet of driving surface. Both ends will be mitered 4 foot with a 4 : 1 slope and poured with a 4 inch thick reinforced concrete slab.

INSTALLATION NOTE: Turnouts will be required as follows:
a) a majority of the current and existing driveway turnouts are paved, or;
b) the driveway to be served will be paved or formed with concrete.
Turnouts shall be concrete or paved a minimum of 12 feet wide or the width of the concrete or paved driveway, whichever is greater. The width shall conform to the current and existing paved or concreted turnouts.

[ ] Culvert installation shall conform to the approved site plan standards.

[ ] Department of Transportation Permit installation approved standards.

[ ] Other

ALL PROPER SAFETY REQUIREMENTS SHOULD BE FOLLOWED DURING THE INSTALATION OF THE CULVERT.

135 NE Hernando Ave., Suite B-21
Lake City, FL 32055
Phone: 386-758-1008 Fax: 386-758-2160

Amount Paid 25.00

6880

UNIVERSAL ENGINEERING SCIENCES

Consultants in: Geotechnical Engineering • Environmental Sciences • Construction Materials Testing

4475 S.W. 35th Terrace • Gainesville, Florida 32608 • (352) 372-3392

REPORT ON IN-PLACE DENSITY TESTS

no permit posted

CLIENT: Cornerstone Developers PERMIT NO. 25015

PROJECT: Emerial Cove Lot 98 Lake City, Columbia Co.

AREA TESTED: Fill ↓ prop Bldg. pad

COURSE: F/G DEPTH OF TEST: 0-1'

TYPE OF TEST: Astm 2922 DATE TESTED: 09-29-06

NOTE: The below tests DO / DO NOT meet the minimum 95 % compaction requirements of maximum density.

REMARKS:

LOCATION OF TESTS	DRY DEN.	MAX. DEN.	% MAX. DEN.	% MOIST.	OPT. MOIST.
		107.5			11.0
App. 10' NW of SE corner of prop Bldg. pad	104.6		97.3	6.4	
App. Center of prop. Bldg. pad	105.8		98.4	6.0	
App. 10' SE of NW corner of prop Bldg. pad	104.6		97.3	6.1	

TECH. LS

4404

25015

Cal-Tech Testing, Inc.
- Engineering
- Geotechnical
- Environmental

LABORATORIES

P.O. Box 1825 • Lake City, FL 32056 Tel. (386) 755-3633 • Fax (386) 752-8456
4784 Roosevelt Street • Jacksonville, FL 32254 Tel. (904) 381-8901 • Fax (904) 381-8902
2230 Greensboro Highway • Quincy, FL 32351 Tel. (850) 442-3495 • Fax (850) 442-4008

October 22, 2006

Cornerstone Developers, LLC
180 NW Amenity Court
Lake City, Florida 32055

Attention: Chris Cox

Reference: Proposed Residence
Emerald Cove, Lot 98
Columbia County, Florida
Cal-Tech Project No. 06-581

Dear Mr. Cox,

Cal-Tech Testing, Inc. has completed an investigation and evaluation of lot 98 of Emerald Cove in Columbia County, Florida. The purposes of our work were to evaluate the potential for flooding of a home to be constructed at the site and to provide recommendations for selecting a finished floor elevation.

Based upon the U. S. Coast and Geodetic Survey marker "BP19" located near the intersection of U. S. 90 and Brown Road, the elevation of the roadway centerline and the proposed finished floor elevation are 108.13 feet and 107.29 feet, respectively. Thus the finished floor elevation of the residence to be constructed at lot 98 is approximately 0.8 feet below the centerline elevation of the adjacent roadway.

Columbia County regulations require the finished floor of a new residence to be at least 12 inches above the elevation of the adjacent roadway unless it can be shown such an elevation is not required to substantially reduce the likelihood of flooding.

Based upon the FEMA flood map for Columbia County, the drainage basin in which the proposed home site is located is not a flood area; therefore, flooding of the home should not be expected if the floor is constructed at the proposed elevation. If for some reason however flooding did occur within this drainage basin, flooding to an elevation of 107 feet would produce flood depths on the order of 20 feet within portions of the basin. Flooding to this depth is considered to be highly unlikely.

It should be noted a relatively large, topographically isolated flood area is located approximately one-half mile south southeast of the building site. The flood elevation for this area has not been determined by FEMA; however, based upon the area delineated

by the flood map, this flood elevation is estimated to be about 112.0 feet. The proposed finished floor elevation is roughly 5 feet below this flood elevation; however, this flood area is isolated, and flooding at the home site should not be expected.

Elevating the floor of the residence to 12 inches above the adjacent roadway should not be required; however, we recommend the finished floor be a minimum of 12 inches above the finished surface grade at the perimeter of the residence.

We appreciate the opportunity to be of service on this project and look forward to a continued association. Please do not hesitate to contact us if you have questions concerning this report or if we may be of further assistance.

Respectfully submitted,
Cal-Tech Testing, Inc.

Linda Creamer, CEO

Linda Creamer
President / CEO

John C. Dorman

John C. Dorman, Jr., Ph.D., P.E.
Geotechnical Engineer S2612
10/23/06

#25015

Job	Truss	Truss Type	Qty	Ply	
L209085A	T02G	COMMON	1	1	CORNERSTONE-SAMUEL EC

Builders FirstSource, Lake City, Fl 32055

Job Reference (optional)

6.200 s Jul 13 2005 MiTek Industries, Inc. Wed Nov 01 10:08:06 2006 Page 1

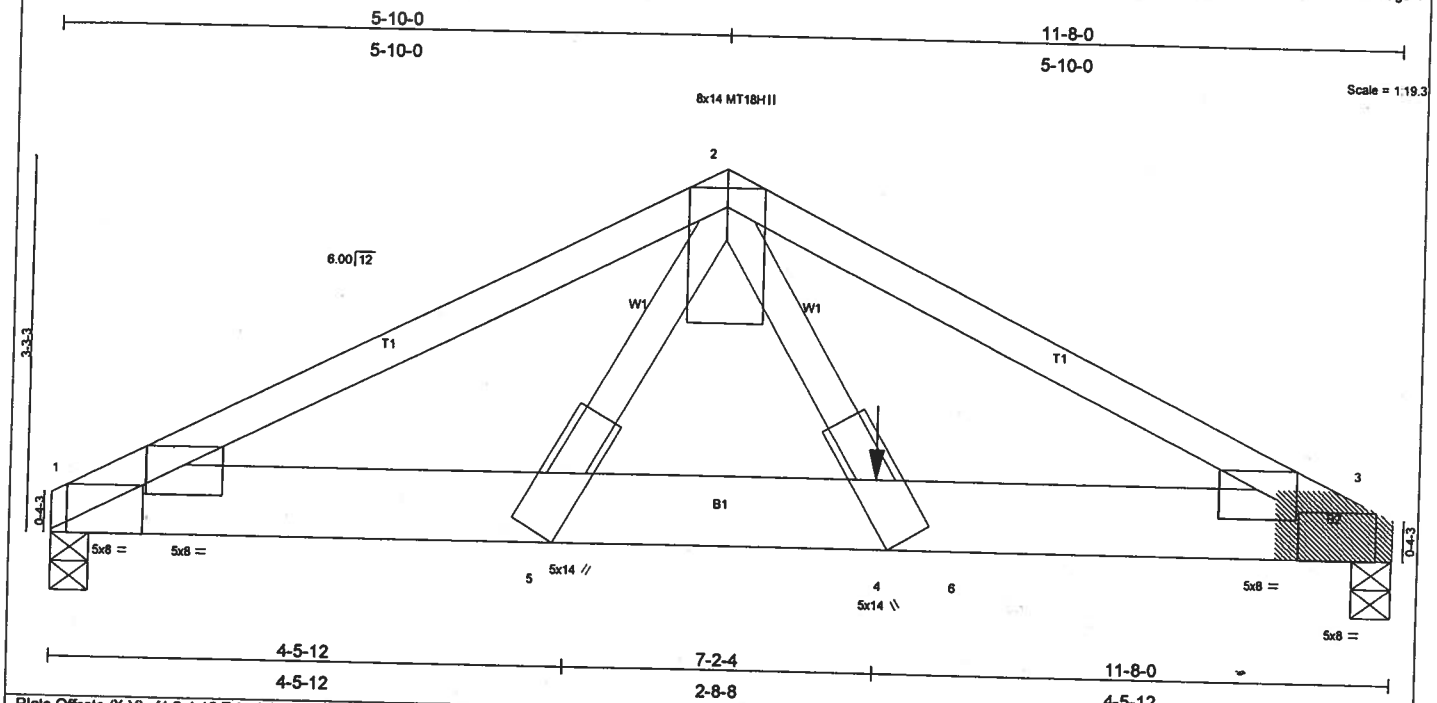

Plate Offsets (X,Y): [1:0-1-10,Edge], [1:0-9-15,0-3-14], [3:0-1-10,Edge], [3:0-9-15,0-3-14]

LOADING (psf)		SPACING	2-0-0	CSI		DEFL	in	(loc)	l/defl	L/d	PLATES	GRIP
TCLL	20.0	Plates Increase	1.25	TC	0.71	Vert(LL)	-0.11	4	>999	240	MT20	244/190
TCDL	7.0	Lumber Increase	1.25	BC	0.66	Vert(TL)	-0.17	3-4	>784	180	MT18H	244/190
BCLL	10.0	Rep Stress Incr	NO	WB	0.80	Horz(TL)	0.03	3	n/a	n/a		
BCDL	5.0	Code FBC2004/TPI2002		(Matrix)							Weight: 67 lb	

LUMBER
TOP CHORD 2 X 4 SYP No.2
BOT CHORD 2 X 8 SYP 2400F 2.0E
WEBS 2 X 4 SYP No.2

BRACING
TOP CHORD Structural wood sheathing directly applied or 2-1-13 oc purlins.
BOT CHORD Rigid ceiling directly applied or 8-1-14 oc bracing.

REACTIONS (lb/size) 1=1858/0-4-0, 3=4142/0-4-14 (0-4-0 + bearing block)
Max Horz 1=41(load case 3)
Max Uplift1=-677(load case 4), 3=-1539(load case 5)

FORCES (lb) - Maximum Compression/Maximum Tension
TOP CHORD 1-2=-3729/1346, 2-3=-5940/2187
BOT CHORD 1-5=-1171/3285, 4-5=-1167/3225, 4-6=-1909/5286, 3-6=-1909/5286
WEBS 2-5=-8/153, 2-4=-1590/4341

JOINT STRESS INDEX
1 = 0.79, 1 = 0.53, 2 = 0.73, 3 = 0.66, 3 = 0.00, 3 = 0.53, 4 = 0.70 and 5 = 0.70

NOTES
1) 2 X 8 SYP 2400F 2.0E bearing block 12" long at jt. 3 attached to front face with 4 rows of 0.131"x3" Nails spaced 3" o.c. 16 Total fasteners. Bearing is assumed to be SYP.
2) Unbalanced roof live loads have been considered for this design.
3) Wind: ASCE 7-02; 110mph (3-second gust); h=20ft; TCDL=4.2psf; BCDL=3.0psf; Category II; Exp B; enclosed; MWFRS gable end zone; Lumber DOL=1.60 plate grip DOL=1.60.
4) All plates are MT20 plates unless otherwise indicated.
5) All bearings are assumed to be SYP No.2 crushing capacity of 565.00 psi
6) Provide mechanical connection (by others) of truss to bearing plate capable of withstanding 677 lb uplift at joint 1 and 1539 lb uplift at joint 3.
7) Girder carries tie-in span(s): 31-10-8 from 8-0-0 to 11-8-0
8) Hanger(s) or other connection device(s) shall be provided sufficient to support concentrated load(s) 2852 lb down and 1077 lb up at 7-2-4 on bottom chord. The design/selection of such connection device(s) is the responsibility of others.
9) In the LOAD CASE(S) section, loads applied to the face of the truss are noted as front (F) or back (B).

LOAD CASE(S) Standard
1) Regular: Lumber Increase=1.25, Plate Increase=1.25
Uniform Loads (plf)
Vert: 1-2=-54, 2-3=-54, 1-6=-30, 3-6=-657(F=-627)
Concentrated Loads (lb)
Vert: 4=-2852(F)

NOV 0 1 2006

CERTIFICATE OF

OCCUPANCY

COLUMBIA COUNTY, FLORIDA

Department of Building and Zoning Inspection

This Certificate of Occupancy is issued to the below named permit holder for the building and premises at the below named location, and certifies that the work has been completed in accordance with the Columbia County Building Code.

Parcel Number 33-3S-16-02438-198

Building permit No. 000025015

Use Classification SFD,UTILITY

Fire: 50.22

Permit Holder BRYAN ZECHER

Waste: 150.75

Owner of Building CORNERSTONE DEVELOPERS

Total: 200.97

Location: 372 SW HEATHRIDGE DR(EMERALD COVE,LOT 98)

Date: 01/09/2007

John Kence

Building Inspector

POST IN A CONSPICUOUS PLACE
(Business Places Only)

GARAGE DOORS

REVISIONS			
LETTER	DESCRIPTION	DATE	
A	REV PER CN 10130	3/06/98	
B	REV PER CN 10141	3/13/98	
C	REV PER CN 10132	[illegible]	

...ECTED WITH 5 OR MORE SECTIONS MUST BE
... STRUTS FOR THE ADDITIONAL INTERMEDIATE
ON THE THIRD SECTION.
...L SECTIONS LESS THAN 20.812" MUST BE
THE ACTUAL SECTION HEIGHT & 20.812".
1 X 5/8" LONG TYPE AB HEX HEAD METAL SCREW
1 WIND WARNINGS ISSUED.

2.

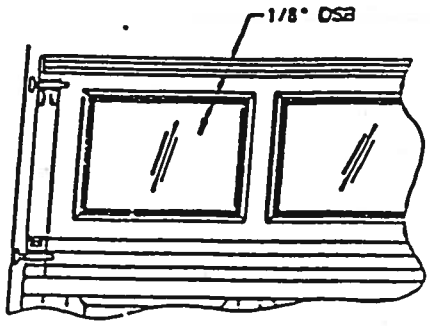

OPTIONAL WINDOW DETAIL
SCALE: 3/32

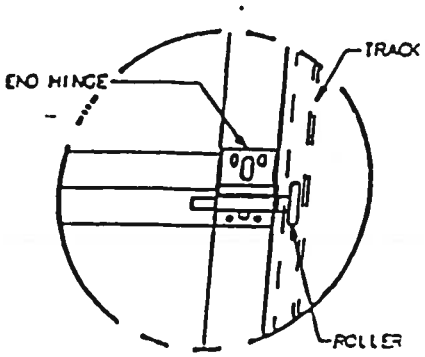

DETAIL "F"
SCALE: 1/4
(16" WIDE)

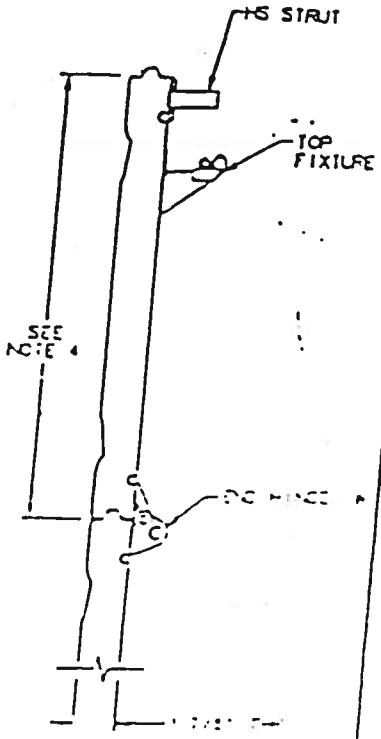

SECTION "A-A"
SCALE: 1/4

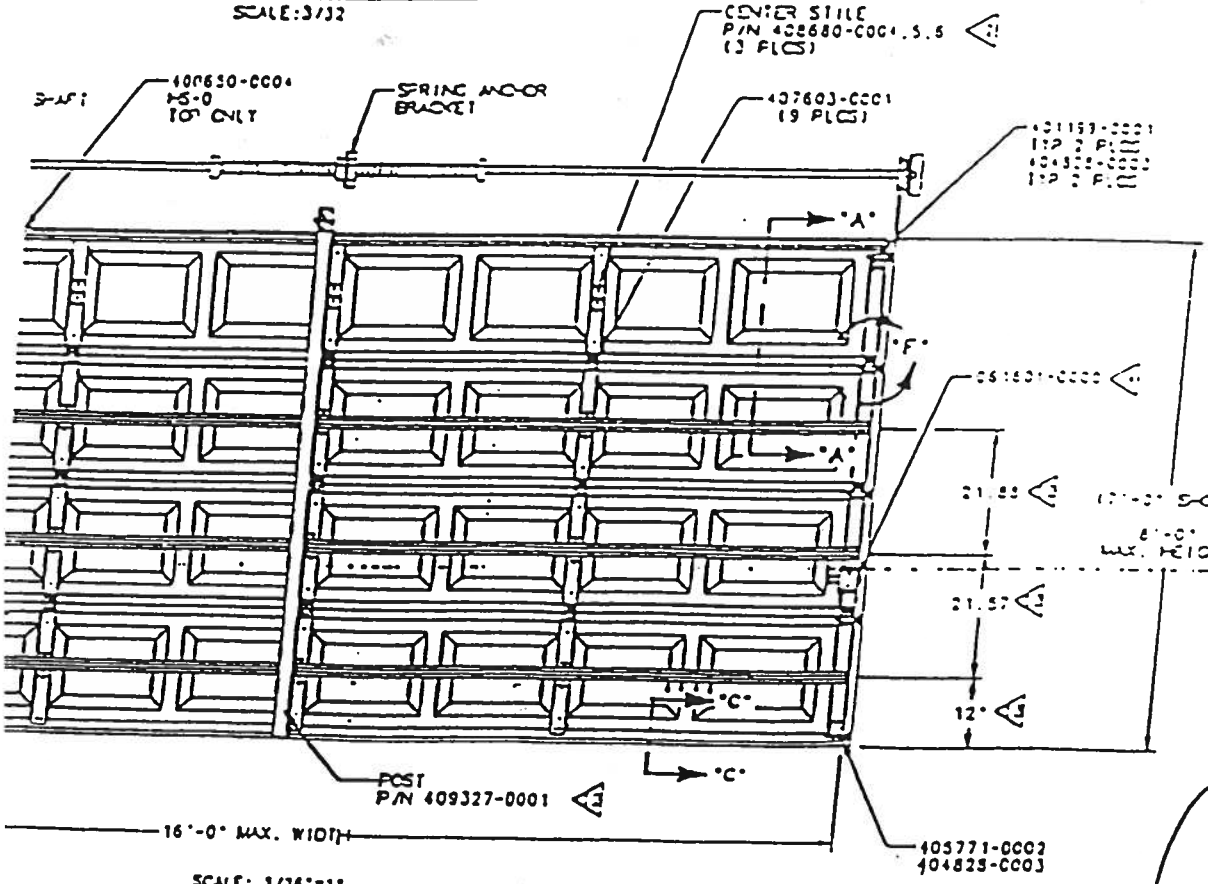

DESIGN LOAD
25 PSF =
TEST LOAD
37.5 PSF =

SCALE: 1/16"=1"
INTERIOR ELEVATION

M. TOLNIS	01/13/98	SERIES 280 & 180 RESI STL DR. 16'-0" MAX WIDTH, WINDLOAD	
N/A	DAVID FAX	02/19/98	D-409335
NONE / EACH	DAVID FAX	02/19/98	

Notice of Treatment

Applicator Florida Pest Control & Chemical Co.

Address 536 SE Bayne Dr.

City L.C. **Phone** 386-752-1703

Site Location **Subdivision**

Lot# 98 **Block#** **Permit#** 25015

Address 372 SW Heathridge Dr. L.C.

AREAS TREATED

Area Treated	Date	Time	Gal.	Print Technician's Name
Main Body	11-16-06	8:11		F082B.H.
Patio/s #				
Stoop/s #				
Porch/s #				
Brick Veneer				
Extension Walls				
A/C Pad				
Walk/s #				
Exterior of Foundation				
Driveway Apron				
Out Building				
Tub Trap/s				
(Other)				

Name of Product Applied Boracare 23 %

Remarks

Applicator - White • Permit File - Canary • Permit Holder - Pink

©

1. TESTED IN ACCORDANCE WITH STANDARD BUILDING CODE, CHAPTER 17, TO A POSITIVE AND NEGATIVE 37.5 PSF.
2. DASH NUMBERS REPRESENT VARIOUS SECTION HEIGHTS.
3. FOUR SECTION 7' HIGH DOOR SHOWN. 8' HIGH DOORS HAVE FIVE SECTIONS.
4. SECTION HEIGHT OF 20.312, 19.00 & 16.75 ARE AVAILABLE AND MAY BE USED IN COMBINATION TO ACHIEVE VARIOUS HEIGHT DOORS.
5. EMBOSSMENT PATTERN OF 14.50 X 20.375 SHOWN. ALTERNATE PATTERNS OF 12.50 X 43.375 AND 12.50 X 20.375 MAY BE USED.
6. TORSION SPRINGS SHOWN. EXTENSION SPRINGS AVAILABLE.
7. USE THIS BRACKET, REF. P/N 405964-0002, ON 8' HIGH DOORS ONLY.
8. WINDOW MAY BE INSTALLED IN THE TOP SECTION OR THE SECTION IMMEDIATELY BELOW THE TOP SECTION.
9. THE STRUT PLACEMENT ON E CONSISTENT WITH THE DOOR SECTIONS ARE TO BE PLACE
10. THE STRUT PLACEMENT DIME REDUCED BY THE DIFFERENCE
11. SCREW P/N 605911-0001 IS
12. POST TO BE INSTALLED ONLY
13. STRUT PLACEMENTS CAN VARY
14. QUANTITY FOR DOORS CAN BE

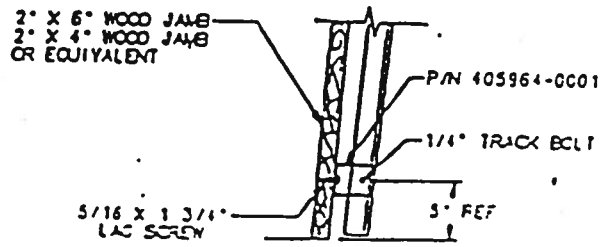

DETAIL "E"
SCALE: 1/3

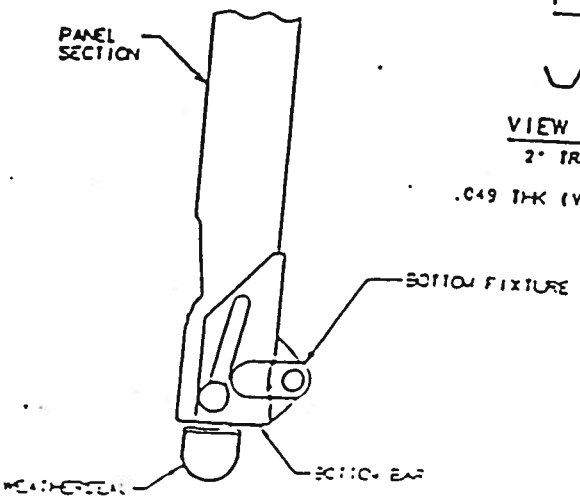

VIEW "D-
2" TRACK
.049 THK (VERT

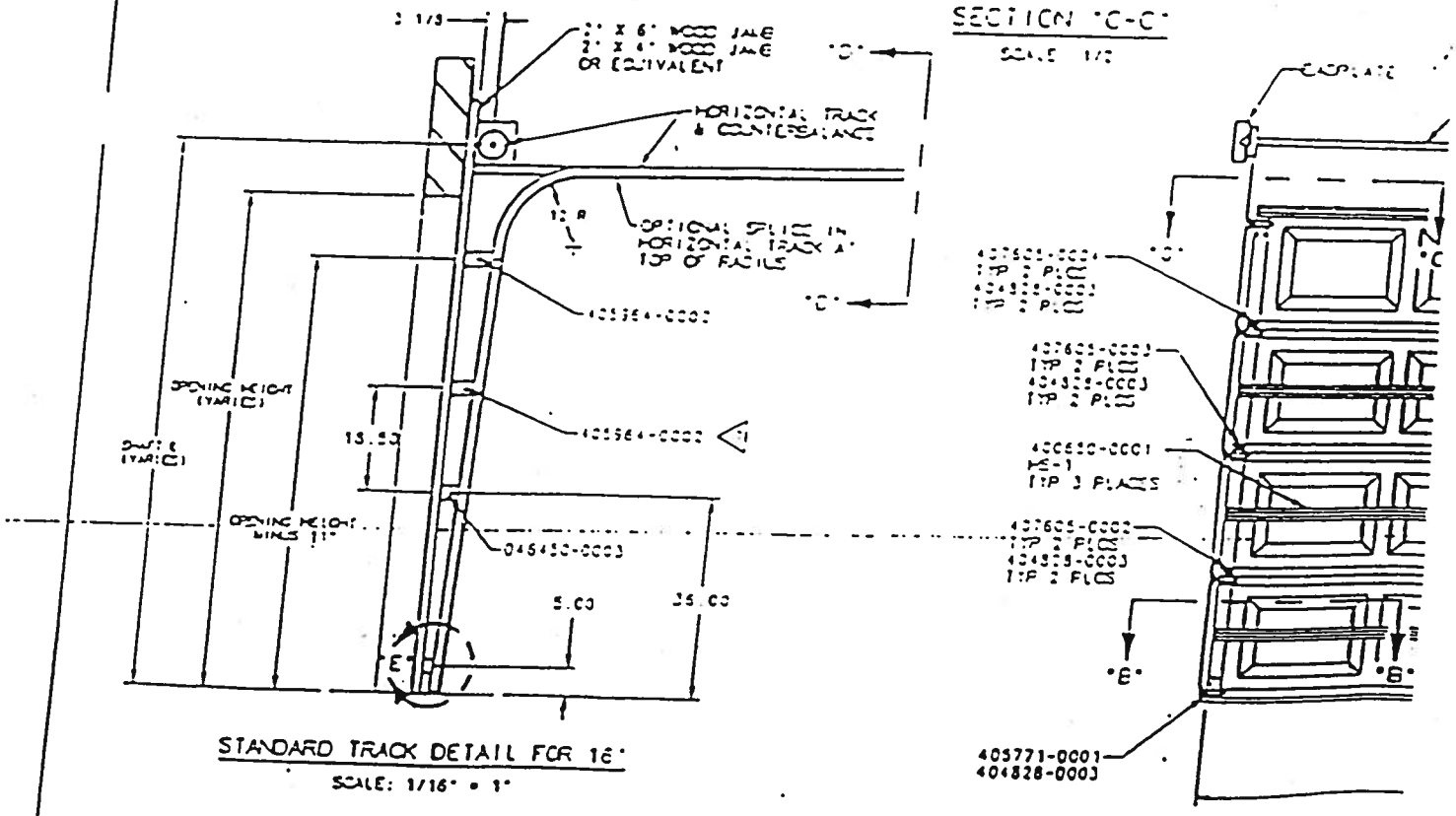

STANDARD TRACK DETAIL FOR 16'
SCALE: 1/16" = 1"

SERIES 280 THRU 289 ARE EQUIVALENT CONSTRUCTION 25GA STEEL
SERIES 180 ARE SAME CONSTRUCTION AS SERIES 280 ONLY 24GA STEEL AND END CAPS

DOOR TESTED WAS 281 SERIES.

DOOR WIDTH	CENTER STILE	END STILE	ROLLER SHAFT BRACKET	STRUTS/SECT.	ROLLER	VERTICAL TRACK GAGE	JAMB LOAD (# PER FT-HT)	HARDWARE
16'	3	SINGLE		HS1 HS0	2" X 7/16"	.049"	100	STD.

GARAGE HEADER (84)

Anthony POWER HEADER®

$26F_b$ - 1.9E

ENGINEERED WOOD SECTION PROPERTIES AND LOAD CAPACITIES

ALLOWABLE DESIGN STRESSES (PSI):

FLEXURAL STRESS (F_b) =	2600
COMPRESSION PERP. TO GRAIN ($F_{c\perp}$) =	740
HORIZONTAL SHEAR (F_v) =	225
MODULUS OF ELASTICITY (MOE) =	1.9×10^6

[illegible]	7.7	9.0	10.4	11.7	12.9	14.2	15.5
[illegible]	326	514	789	1115	1521	2014	2604
[illegible]	8865	12015	15996	20145	24772	29877	35460
[illegible]	3908	4550	5250	5892	6533	7175	7817

NOTES:

1. Beam weights are based on 38 pcf.
2. Moment capacities are based on a span of 21 feet and must be modified for other spans.
3. Flexural Stress, F_b, shall be modified by the Volume Factor, C_v as outlined in AITC 117 - Design 1993 and the NDS for Wood Construction 1997.
4. Allowable design properties and load capacities are based on a load duration of 100 percent and dry use conditions.
5. The AITC NER 466 was used in calculating the above allowable design stresses for POWER HEADER®.

GARAGE HEADER COMPARISONS

[illegible]	810 / 540	3-1/2" x 8-3/8"	3-1/2" x 9-5/8"	3-1/2" x 9"	3-1/2" x 9-1/4"	3-1/2" x 11-1/4"**
[illegible]	990 / 720	3-1/2" x 9-3/4"	3-1/2" x 9-5/8"	3-1/2" x 10-1/2"	3-1/2" x 9-1/4"	3-1/2" x 11-1/4"**
[illegible]	610 / 400	3-1/2" x 12-5/8"	3-1/2" x 13-1/4"	3-1/2" x 13-1/2"	3-1/2" x 14"	3-1/2" x 14"**
[illegible]	765 / 510	3-1/2" x 14"	3-1/2" x 15-1/8"	3-1/2" x 15"	3-1/2" x 14"	3-1/2" x 16"**
[illegible]	750 / 480	3-1/2" x 15-1/8"	3-1/2" x 16-1/2"	3-1/2" x 16-1/2"	3-1/2" x 16"	3-1/2" x 18"**
[illegible]	900 / 600	3-1/2" x 16-3/4"	3-1/2" x 17-7/8"	3-1/2" x 18"	3-1/2" x 16"	—

For more information on POWER HEADER®, or other laminated structural products from Anthony Forest Products Company please call 1-800-221-2326 or FAX at 870-862-6502.

POWER HEADER® is a trademark of
Anthony Forest Products Company
Post Office Box 1877 • El Dorado, Arkansas 71731
Internet address: http:// www.anthonyforest.com
e-mail: info@anthonyforest.com

Distributed by:

WOODFORD PLYWOOD, INC.
"Structural Wood Products"
11960 West Beaver Street
Jacksonville, Florida 32220
(904) 695-9060
(800) 447-6568
FAX (904) 695-9160

Anthony POWER HEADER®

26F$_b$ - 1.9E

3-1/2" WIDTH GARAGE HEADER PLF CAPACITY

844	896		1216		1573								
161	207	254	330	390	510	552	669	752	824				
114	145	180	231	277	359	391	510	534	653	707	789		

844	975		1322										
161	207	254	330	390	510	552	724	752	897				
114	145	180	231	277	359	391	510	534	699	693			

562	778	888	1056	1363	1367		1582						
107	153	169	245	260	380	368	540	501	715	664	864	840	
76	107	120	171	185	267	261	380	356	521	471	684	609	813

NOTES:

1. Values shown are the maximum uniform loads in pounds per lineal foot (PLF) that can be applied to the header. Header weight has been subtracted from the allowable total load.
2. Tables are based on simple span uniform load conditions using a design span equal to the center-to-center of bearing. Non-shaded areas are based on 3" of bearing at each support, shaded areas on 4.5" of bearing, and shaded & outlined areas on 6" of bearing at supports.
3. Headers are assumed to be loaded on the top edge with continuous lateral support along compression edge.
4. When no live load is listed, total load controls.
5. Deflection limits are listed within the PLF table heading.

GARAGE HEADER SIZING USING PLF TABLES:

To size a garage header supporting roof only, determine the total load & live load in pounds per lineal foot (PLF). Check the appropriate PLF table for a header supporting roof loads only (125% Non-Snow vs. 115% Snow) and select a member with a total load and live load capacity which meets or exceeds the design load for the rough opening size. For a garage header supporting roof, wall, and floor framing, determine the total load and live load in pounds per lineal foot (PLF). Select a header size from the roof, wall, and floor table (100% load duration) which has a total load and live load capacity equal to or greater than the design load for the appropriate rough opening.

X
Opaque Inswing Unit

COP-WL-JH4101-02

WOOD-EDGE STEEL DOORS

APPROVED ARRANGEMENT:

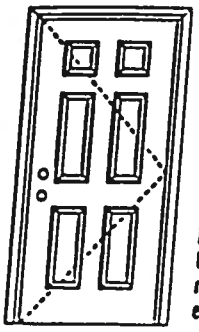

Warnock Hersey

Test Data Review Certificate #3026447A and COP/Test Report Validation Matrix #3026447A-001 provides additional information - available from the ITS/WH website (www.itsweb.com), the Masonite website (www.masonite.com) or the Masonite technical center

Note:
Units of other sizes are covered by this report as long as the panel used does not exceed 3'0" x 6'8".

Single Door
Maximum unit size = 3'0" x 6'8"

Design Pressure
+66.0/-66.0
Limited outer unit sizes special dimensions design pressure

Large Missile Impact Resistance
Hurricane protective system (shutters) is NOT REQUIRED.

Actual design pressure and impact resistance required for a specific building design and exposure, should be determined based on local building codes which may be higher than required

MINIMUM ASSEMBLY DETAIL:

Compliance requires that minimum assembly details have been followed - see WD-WL-WA0001-02

MINIMUM INSTALLATION DETAIL:

Compliance requires that minimum installation details have been followed - see WD-WL-WA0001-02

APPROVED DOOR STYLES:

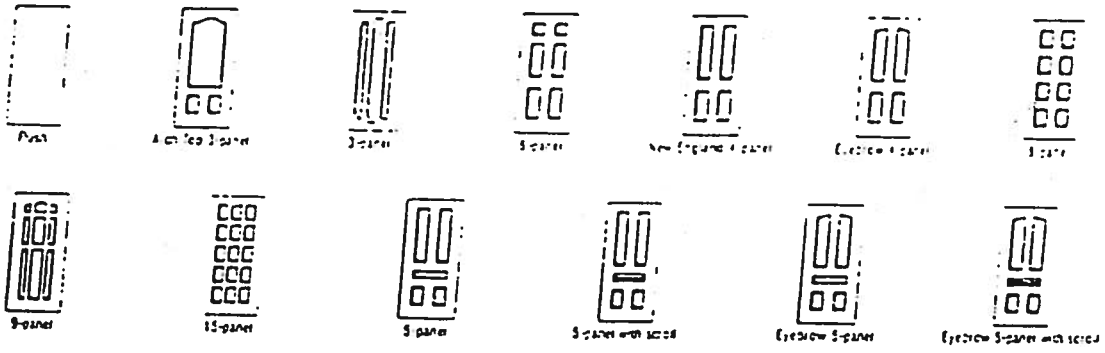

Johnson EntrySystems

June 17, 2002
Our continuing program of product improvement may cause specifications, design and details to change without notice

PREMDOR Collection

Masonite
Masonite International Corporation

X
Opaque Inswing Unit

COP-WL-JH4101-02

WOOD-EDGE STEEL DOORS

CERTIFIED TEST REPORTS:

NCTL 210-2185-1, 2, 3

Certifying Engineer and License Number: Barry D. Portney, P.E. / 16258.

Unit Tested in Accordance with Miami-Dade BCCO PA201, PA202 and PA203.

Door panels constructed from 26-gauge 0.017" thick steel skins. Both stiles constructed from wood Top end rails constructed of 0.041" steel. Bottom end rails constructed of 0.021" steel. Interior cavity of slab filled with rigid polyurethane foam core.

Frame constructed of wood with an extruded aluminum threshold.

PRODUCT COMPLIANCE LABELING:

TESTED IN ACCORDANCE WITH
MIAMI-DADE BCCO
PA201, PA202 & PA203

COMPANY NAME
CITY STATE

To the best of my knowledge and ability the above side-hinged exterior door unit conforms to the requirements of the 2001 Florida Building Code, Chapter 17 (Structural Tests and Inspections).

State of Florida, Professional Engineer
Kurt Balthazor, P.E. – License Number 56533

Warnock Hersey

Test Data Review Certificate #[illegible] and COP/Test Report Validation Matrix #30264471A-001 provides additional information - available from the ITS WH website (www.itswh.com), the Masonite website (www.masonite.com) or the Masonite technical center.

Johnson EntrySystems

June 17, 2002

PREMDOOR

Masonite
Masonite International Corporation

WINDOWS

AAMA/NWWDA 101/I.S.2-97
TEST REPORT SUMMARY

Rendered to:

MI HOME PRODUCTS, INC.

SERIES/MODEL: 650 Fin
TYPE: Aluminum Single Hung Window

Title of Test	Results
Rating	H-R40 52 x 72
Overall Design Pressure	+45.0 psf -47.2 psf
Operating Force	11 lb max.
Air Infiltration	0.13 cfm/ft²
Water Resistance	6.00 psf
Structural Test Pressure	+67.5 psf -70.8 psf
Deglazing	Passed
Forced Entry Resistance	Grade 10

Reference should be made to Report No. 01-41134.01 dated 03/26/02 for complete test specimen description and data.

For ARCHITECTURAL TESTING, INC.

Mark A. Hess, Technician

MAH:nlb

1 APRIL 2002

STATE OF FLORIDA PROFESSIONAL ENGINEER

Architectural Testing

AAMA/NWWDA 101/I.S.2-97 TEST REPORT

Rendered to

MI HOME PRODUCTS, INC.
650 West Market Street
P.O. Box 370
Gratz, Pennsylvania 17030-0370

Report No: 01-41134.01
Test Date: 03/07/02
Report Date: 03/26/02
Expiration Date: 03/07/06

Project Summary: Architectural Testing, Inc. (ATI) was contracted by MI Home Products, Inc to perform tests on Series/Model 650 Fin, aluminum single hung window at their facility located in Elizabethville, Pennsylvania. The samples tested successfully met the performance requirements for a H-R40 52 x 72 rating.

Test Specification: The test specimen was evaluated in accordance with AAMA/NWWDA 101/I.S.2-97, *Voluntary Specifications for Aluminum, Vinyl (PVC) and Wood Windows and Glass Doors.*

Test Specimen Description

Series/Model: 650 Fin

Type: Aluminum Single Hung Window

Overall Size: 4' 4-1/4" wide by 6' 0-3/8" high

Active Sash Size: 4' 1-3/4" wide by 3' 0-5/8" high

Daylight Opening Size: 3' 11-3/8" wide by 2' 9-1/2" high

Screen Size: 4' 0-1/4" wide by 2' 11-1/8" high

Finish: All aluminum was white.

Glazing Details: The active and fixed lites utilized 5/8" thick, sealed insulating glass constructed from two sheets of 1/8" thick, clear annealed glass and a metal reinforced butyl spacer system. The active sash was channel glazed utilizing a flexible vinyl wrap around gasket. The fixed lite was interior glazed against double-sided adhesive foam tape and secured with PVC snap-in glazing beads.

130 Derry Court
York, PA 17402-9405
phone: 717.764.7700
fax: 717.764.4129
www.archtest.com

Allen G. Reeves
1 APRIL 2002

REEVES
LICENSE
NO. 18354
STATE OF FLORIDA
PROFESSIONAL ENGINEER

Test Specimen Description: (Continued)

Weatherstripping:

Description	Quantity	Location
0.230" high by 0.270" backed polypile with center fin	1 Row	Fixed meeting rail
0.250" high by 0.187" backed polypile with center fin	2 Rows	Active sash stiles
1/2" x 1/2" dust plug	4 Pieces	Active sash, top and bottom of stiles
1/4" foam-filled vinyl bulb seal	1 Row	Active sash, bottom rail

Frame Construction: The frame was constructed of extruded aluminum with coped, butted, and sealed corners fastened with two #8 x 1" screws through the head and sill into each jamb screw boss. End caps were utilized on the ends of the fixed meeting rail and secured with two 1-1/4" screws per cap. Meeting rail was secured to the frame utilizing two 1-1/4" screws.

Sash Construction: The sash was constructed of extruded aluminum with coped, butted and sealed corners fastened with two #8 x 1-1/2" screws through the rails into each jamb screw boss.

Screen Construction: The screen was constructed from roll-formed aluminum with keyed corners. The fiberglass mesh was secured with a flexible spline.

Hardware:

Description	Quantity	Location
Metal cam lock with keeper		Midspan, active meeting rail with keeper adjacent on fixed meeting rail
Plastic tilt latch	2	Active sash, meeting rail ends
Metal tilt pin	2	Active sash, bottom rail ends
Balance assembly	2	One in each jamb
Screen plunger	2	4" from rail ends on top rail

ALLEN H. REEVES, JR. CERTIFICATE NO. 13276 STATE OF FLORIDA PROFESSIONAL ENGINEER

Allen H. Reeves
1 APRIL 2002

Test Specimen Description: (Continued)

Weatherstripping:

Description	Quantity	Location
0.230" high by 0.270" backed polypile with center fin	1 Row	Fixed meeting rail
0.250" high by 0.187" backed polypile with center fin	2 Rows	Active sash stiles
1/2" x 1/2" dust plug	4 Pieces	Active sash, top and bottom of stiles
1/4" foam-filled vinyl bulb seal	1 Row	Active sash, bottom rail

Frame Construction: The frame was constructed of extruded aluminum with coped, butted, and sealed corners fastened with two #8 x 1" screws through the head and sill into each jamb screw boss. End caps were utilized on the ends of the fixed meeting rail and secured with two 1-1/4" screws per cap. Meeting rail was secured to the frame utilizing two 1-1/4" screws.

Sash Construction: The sash was constructed of extruded aluminum with coped, butted, and sealed corners fastened with two #8 x 1-1/2" screws through the rails into each jamb screw boss.

Screen Construction: The screen was constructed from roll-formed aluminum with keyed corners. The fiberglass mesh was secured with a flexible spline.

Hardware:

Description	Quantity	Location
Metal cam lock with keeper		Midspan, active meeting rail with keeper adjacent on fixed meeting rail
Plastic tilt latch	2	Active sash, meeting rail ends
Metal tilt pin	2	Active sash, bottom rail ends
Balance assembly	2	One in each jamb
Screen plunger	2	4" from rail ends on top rail

ALLEN H. REEVES, P.E.
CERTIFICATE NO. 13246
STATE OF FLORIDA
PROFESSIONAL ENGINEER

Allen H. Reeves
1 APRIL 2002

Test Specimen Description: (Continued)

Drainage: Sloped sill

Reinforcement: No reinforcement was utilized.

Installation: The test specimen was installed into a 2 x 8 #2 Spruce-Pine-Fir wood test buck with #8 x 1-5/8" drywall screws every 8" on center around the nail fin. Polyurethane was used as a sealant under the nail fin and around the exterior perimeter.

Test Results:

The results are tabulated as follows

Paragraph	Title of Test - Test Method	Results	Allowed
2.2.1.6.1	Operating Force	11 lbs	30 lbs max
	Air Infiltration (ASTM E 283-91) @ 1.57 psf (25 mph)	0.13 cfm/ft²	0.3 cfm/ft² max

Note #1: The tested specimen meets the performance levels specified in AAMA/NWWDA 101/I.S. 2-97 for air infiltration.

	Water Resistance (ASTM E 547-00) (with and without screen) WTP = 2.86 psf	No leakage	No leakage
2.1.4.1	Uniform Load Deflection (ASTM E 330-97) (Measurements reported were taken on the meeting rail) (Loads were held for 33 seconds)		
	@ 25.9 psf (positive)	0.42"*	0.26" max.
	@ 34.7 psf (negative)	0.43"*	0.26" max.

**Exceeds L/175 for deflection, but passes all other test requirements*

2.1.4.2	Uniform Load Structural (ASTM E 330-97) (Measurements reported were taken on the meeting rail) (Loads were held for 10 seconds)		
	@ 38.9 psf (positive)	0.02"	0.18" max.
	@ 52.1 psf (negative)	0.02"	0.18" max.

Allen M. Reeves
1 APRIL 2002

ALLEN M. REEVES
CERTIFICATE
NO. 1337
STATE OF
FLORIDA
PROFESSIONAL ENGINEER

Test Specimen Description: (Continued)

Paragraph	Title of Test - Test Method	Results	Allowed
2.2.1.6.2	Deglazing Test (ASTM E 987)		
	In operating direction at 70 lbs		
	Meeting rail	0.12"/25%	0.50"/100%
	Bottom rail	0.12"/25%	0.50"/100%
	In remaining direction at 50 lbs		
	Left stile	0.06"/12%	0.50"/100%
	Right stile	0.06"/12%	0.50"/100%
	Forced Entry Resistance (ASTM F 588-97)		
	Type: A		
	Grade: 10		
	Lock Manipulation Test	No entry	No entry
	Tests A1 through A5	No entry	No entry
	Test A7	No entry	No entry
	Lock Manipulation Test	No entry	No entry

Optional Performance

4.3	Water Resistance (ASTM E 547-00) (with and without screen) WTP = 6.00 psf	No leakage	No leakage
	Uniform Load Deflection (ASTM E 330-97) (Measurements reported were taken on the meeting rail) (Loads were held for 33 seconds)		
	@ 45.0 psf (positive)	0.47"*	0.26" max.
	@ 47.2 psf (negative)	0.46"*	0.26" max.

*Exceeds L/175 for deflection, but passes all other test requirements.

	Uniform Load Structural (ASTM E 330-97) (Measurements reported were taken on the meeting rail) (Loads were held for 10 seconds)		
	@ 67.5 psf (positive)	0.05"	0.18" max.
	@ 70.8 psf (negative)	0.05"	0.18" max.

LEN H. REYES
STATE OF FLORIDA
PROFESSIONAL ENGINEER

1 APRIL 2002

Detailed drawings, representative samples of the test specimen, and a copy of this report will be retained by ATI for a period of four years. The above results were secured by using the designated test methods and they indicate compliance with the performance requirements of the above referenced specification. This report does not constitute certification of this product, which may only be granted by the certification program administrator.

For ARCHITECTURAL TESTING, INC:

Mark A. Hess
Technician

Allen N. Reeves, P.E.
Director - Engineering Services
1 APRIL 2002

MAH:mb
01-41134.01

ALLEN N. REEVES
CERTIFICATE
NO. 13[illegible]
STATE OF
FLORIDA
PROFESSIONAL ENGINEER

SHINGLES

ELK Premium Roofing

March 6, 2002

Subject: Elk Product Approval Information

All Prestique® and Capstone® products manufactured in Tuscaloosa, AL are certified under the Miami – Dade County Building Code Office (BCCO). These products also meet the requirements for the Florida Building Code since they are MD approved. The following test protocols must be passed by each of the products in order for MD product certification:

ASTM D3462
PA 100 (110 mph uplift and wind driven rain resistance)
PA 107 (Modified ASTM D3161 - 110 mph wind uplift resistance)

The nailing patterns that were used during the PA 100 and PA 107 wind test protocols for the Prestique and Capstone products are listed below. Also listed below are the Miami – Dade Notice of Acceptance Numbers (NOA)

Raised Profile, Prestique High Definition, Prestique 25 or Prestique 30 -
PA 100 = 4 nails
PA 107 = 5 nails
MD NOA# = 01-1226.04

Prestique I 25 or Prestique I* -
PA 100 = 4 nails
PA 107 = 5 nails
MD NOA# = 01-1226.05

Prestique Plus or Prestique Gallery Collection* -
PA 100 = 4 nails
PA 107 = 4 nails
MD NOA# = 01-1226.03

Capstone*
PA 100 = 4 Nails
PA 107 = 4 Nails
MD NOA# = 01-0523.01

* As per the Elk Limited Warranty, six nails are required for the Elk high wind warranty

If there are any questions please contact:

Mike Reed – Technical Manager
(205) 342-0287

or

Daniel Delarmette – QA Engineer
(205) 342-0293

DIRECTIONS FOR APPLICATION

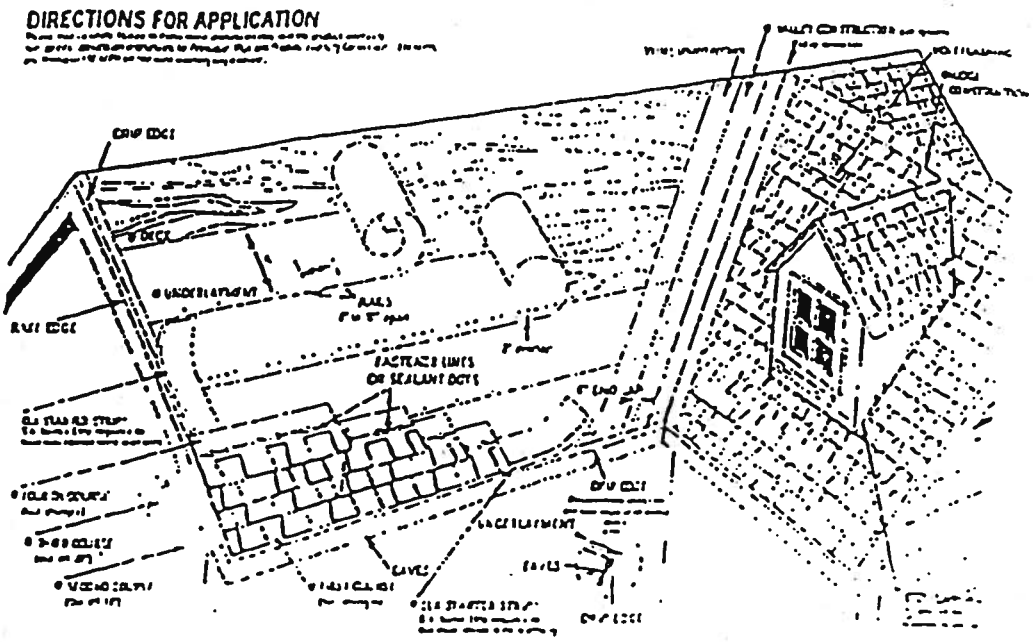

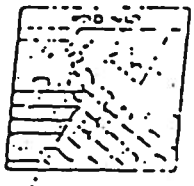

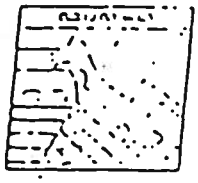

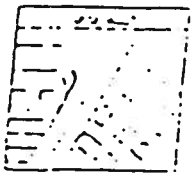

DIRECTIONS FOR APPLICATION

FLASHING

FIRST COURSE

SECOND COURSE

THIRD COURSE

FASTENERS

WARRANTY

CAUTION TO WHOLESALER

ELK

www.elkcorp.com

ROOFING PRODUCTS SPECIFICATIONS – TUSCALOOSA, AL

PRESTIQUE®
HIGH DEFINITION®

RAISED PROFILE™

[illegible]

[illegible]

HIP AND RIDGE SHINGLES

[illegible]

[illegible]

[illegible]

SOUTHEAST &
ATLANTIC OFFICE:
800.945.5551

CORPORATE HEADQUARTERS:
800.354.7732

PLANT LOCATION:
800.945.5545

ELK
www.elkcorp.com

Residential System Sizing Calculation

Summary

Model Home

Lake City, FL

Project Title:
608234TheSamuelModel

Class 3 Rating
Registration No. 0
Climate: North

9/7/2006

Location for weather data: Gainesville - Defaults: Latitude(29) Altitude(152 ft.) Temp Range(M)					
Humidity data: Interior RH (50%) Outdoor wet bulb (77F) Humidity difference(54gr.)					
Winter design temperature	33	F	Summer design temperature	92	F
Winter setpoint	70	F	Summer setpoint	75	F
Winter temperature difference	37	F	Summer temperature difference	17	F
Total heating load calculation	**29827**	**Btuh**	**Total cooling load calculation**	**24704**	**Btuh**
Submitted heating capacity	% of calc	Btuh	Submitted cooling capacity	% of calc	Btuh
Total (Electric Heat Pump)	114.0	34000	Sensible (SHR = 0.50)	85.4	17000
Heat Pump + Auxiliary(0.0kW)	114.0	34000	Latent	353.6	17000
			Total (Electric Heat Pump)	137.6	34000

WINTER CALCULATIONS

Winter Heating Load (for 1511 sqft)

Load component			Load	
Window total	211	sqft	6792	Btuh
Wall total	1277	sqft	4194	Btuh
Door total	60	sqft	777	Btuh
Ceiling total	1558	sqft	1836	Btuh
Floor total	196	sqft	8557	Btuh
Infiltration	189	cfm	7671	Btuh
Duct loss			0	Btuh
Subtotal			**29827**	**Btuh**
Ventilation	0	cfm	0	Btuh
TOTAL HEAT LOSS			**29827**	**Btuh**

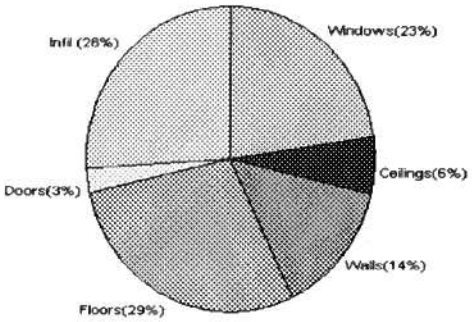

SUMMER CALCULATIONS

Summer Cooling Load (for 1511 sqft)

Load component			Load	
Window total	211	sqft	10965	Btuh
Wall total	1277	sqft	2546	Btuh
Door total	60	sqft	588	Btuh
Ceiling total	1558	sqft	2580	Btuh
Floor total			0	Btuh
Infiltration	99	cfm	1837	Btuh
Internal gain			1380	Btuh
Duct gain			0	Btuh
Sens. Ventilation	0	cfm	0	Btuh
Total sensible gain			**19896**	**Btuh**
Latent gain(ducts)			0	Btuh
Latent gain(infiltration)			3608	Btuh
Latent gain(ventilation)			0	Btuh
Latent gain(internal/occupants/other)			1200	Btuh
Total latent gain			**4808**	**Btuh**
TOTAL HEAT GAIN			**24704**	**Btuh**

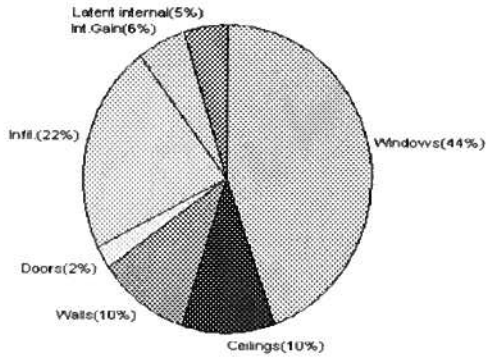

For Florida residences only

EnergyGauge® System Sizing
PREPARED BY: Ken Brooks
DATE: 9-7-06

System Sizing Calculations - Winter

Residential Load - Whole House Component Details

Model Home | Project Title: 608234TheSamuelModel | Class 3 Rating
Registration No. 0
Lake City, FL | Climate: North

Reference City: Gainesville (Defaults) Winter Temperature Difference: 37.0 F | 9/7/2006

This calculation is for Worst Case. The house has been rotated 315 degrees.

Component Loads for Whole House

Window	Panes/SHGC/Frame/U	Orientation	Area(sqft) X	HTM=	Load
1	2, Clear, Metal, 0.87	NW	45.0	32.2	1449 Btuh
2	2, Clear, Metal, 0.87	N	10.0	32.2	322 Btuh
3	2, Clear, Metal, 0.87	NW	45.0	32.2	1449 Btuh
4	2, Clear, Metal, 0.87	W	10.0	32.2	322 Btuh
5	2, Clear, Metal, 0.87	NE	3.0	32.2	97 Btuh
6	2, Clear, Metal, 0.87	SE	6.0	32.2	193 Btuh
7	2, Clear, Metal, 0.87	SE	30.0	32.2	966 Btuh
8	2, Clear, Metal, 0.87	SE	30.0	32.2	966 Btuh
9	2, Clear, Metal, 0.87	SW	2.0	32.2	64 Btuh
10	2, Clear, Metal, 0.87	SW	30.0	32.2	966 Btuh
	Window Total		211(sqft)		6792 Btuh
Walls	Type	R-Value	Area X	HTM=	Load
1	Frame - Wood - Adj(0.09)	13.0	204	3.3	670 Btuh
2	Frame - Wood - Ext(0.09)	13.0	1073	3.3	3524 Btuh
	Wall Total		1277		4194 Btuh
Doors	Type		Area X	HTM=	Load
1	Insulated - Adjacent		20	12.9	259 Btuh
2	Insulated - Exterior		20	12.9	259 Btuh
3	Insulated - Exterior		20	12.9	259 Btuh
	Door Total		60		777Btuh
Ceilings	Type/Color/Surface	R-Value	Area X	HTM=	Load
1	Vented Attic/D/Shin)	30.0	1558	1.2	1836 Btuh
	Ceiling Total		1558		1836Btuh
Floors	Type	R-Value	Size X	HTM=	Load
1	Slab On Grade	0	196.0 ft(p)	43.7	8557 Btuh
	Floor Total		196		8557 Btuh
			Zone Envelope Subtotal:		22156 Btuh
Infiltration	Type	ACH X	Zone Volume	CFM=	
	Natural	0.94	12088	189.4	7671 Btuh
Ductload	Average sealed, R6.0, Supply(Attic), Return(Attic)			(DLM of 0.00)	0 Btuh
Zone #1			**Sensible Zone Subtotal**		**29827 Btuh**

Manual J Winter Calculations

Residential Load - Component Details (continued)

Model Home

Lake City, FL

Project Title:
608234TheSamuelModel

Class 3 Rating
Registration No. 0
Climate: North

9/7/2006

WHOLE HOUSE TOTALS

	Subtotal Sensible	29827 Btuh
	Ventilation Sensible	0 Btuh
	Total Btuh Loss	29827 Btuh

Key: Window types (SHGC - Shading coefficient of glass as SHGC numerical value or as clear or tint)
(Frame types - metal, wood or insulated metal)
(U - Window U-Factor or 'DEF' for default)
(HTM - ManualJ Heat Transfer Multiplier)
Key: Floor size (perimeter(p) for slab-on-grade or area for all other floor types)

For Florida residences only

System Sizing Calculations - Winter

Residential Load - Room by Room Component Details

Model Home | Project Title: 608234TheSamuelModel | Class 3 Rating
Registration No. 0
Lake City, FL | Climate: North

Reference City: Gainesville (Defaults) Winter Temperature Difference: 37.0 F | 9/7/2006

This calculation is for Worst Case. The house has been rotated 315 degrees.

Component Loads for Zone #1: Main

Window	Panes/SHGC/Frame/U	Orientation	Area(sqft) X	HTM=	Load
1	2, Clear, Metal, 0.87	NW	45.0	32.2	1449 Btuh
2	2, Clear, Metal, 0.87	N	10.0	32.2	322 Btuh
3	2, Clear, Metal, 0.87	NW	45.0	32.2	1449 Btuh
4	2, Clear, Metal, 0.87	W	10.0	32.2	322 Btuh
5	2, Clear, Metal, 0.87	NE	3.0	32.2	97 Btuh
6	2, Clear, Metal, 0.87	SE	6.0	32.2	193 Btuh
7	2, Clear, Metal, 0.87	SE	30.0	32.2	966 Btuh
8	2, Clear, Metal, 0.87	SE	30.0	32.2	966 Btuh
9	2, Clear, Metal, 0.87	SW	2.0	32.2	64 Btuh
10	2, Clear, Metal, 0.87	SW	30.0	32.2	966 Btuh
	Window Total		211(sqft)		6792 Btuh
Walls	Type	R-Value	Area X	HTM=	Load
1	Frame - Wood - Adj(0.09)	13.0	204	3.3	670 Btuh
2	Frame - Wood - Ext(0.09)	13.0	1073	3.3	3524 Btuh
	Wall Total		1277		4194 Btuh
Doors	Type		Area X	HTM=	Load
1	Insulated - Adjacent		20	12.9	259 Btuh
2	Insulated - Exterior		20	12.9	259 Btuh
3	Insulated - Exterior		20	12.9	259 Btuh
	Door Total		60		777Btuh
Ceilings	Type/Color/Surface	R-Value	Area X	HTM=	Load
1	Vented Attic/D/Shin)	30.0	1558	1.2	1836 Btuh
	Ceiling Total		1558		1836Btuh
Floors	Type	R-Value	Size X	HTM=	Load
1	Slab On Grade	0	196.0 ft(p)	43.7	8557 Btuh
	Floor Total		196		8557 Btuh
			Zone Envelope Subtotal:		22156 Btuh
Infiltration	Type	ACH X	Zone Volume	CFM=	
	Natural	0.94	12088	189.4	7671 Btuh
Ductload	Average sealed, R6.0, Supply(Attic), Return(Attic)			(DLM of 0.00)	0 Btuh
Zone #1			**Sensible Zone Subtotal**		**29827 Btuh**

Manual J Winter Calculations

Residential Load - Component Details (continued)

Model Home

Lake City, FL

Project Title:
608234TheSamuelModel

Class 3 Rating
Registration No. 0
Climate: North

9/7/2006

WHOLE HOUSE TOTALS

	Subtotal Sensible	29827 Btuh
	Ventilation Sensible	0 Btuh
	Total Btuh Loss	29827 Btuh

Key: Window types (SHGC - Shading coefficient of glass as SHGC numerical value or as clear or tint)
(Frame types - metal, wood or insulated metal)
(U - Window U-Factor or 'DEF' for default)
(HTM - ManualJ Heat Transfer Multiplier)
Key: Floor size (perimeter(p) for slab-on-grade or area for all other floor types)

For Florida residences only

System Sizing Calculations - Summer

Residential Load - Whole House Component Details

Model Home | Project Title: 608234TheSamuelModel | Class 3 Rating
Registration No. 0
Lake City, FL | Climate: North

Reference City: Gainesville (Defaults) Summer Temperature Difference: 17.0 F 9/7/2006

This calculation is for Worst Case. The house has been rotated 315 degrees.

Component Loads for Whole House

Window	Type* Pn/SHGC/U/InSh/ExSh/IS	Ornt	Overhang Len	Overhang Hgt	Window Area(sqft) Gross	Shaded	Unshaded	HTM Shaded	HTM Unshaded	Load
1	2, Clear, 0.87, None,N,N	NW	2ft.	5.5ft.	45.0	0.0	45.0	29	60	2702 Btuh
2	2, Clear, 0.87, None,N,N	N	6.5ft.	5.5ft.	10.0	0.0	10.0	29	29	290 Btuh
3	2, Clear, 0.87, None,N,N	NW	12ft.	5.25f	45.0	0.0	45.0	29	60	2702 Btuh
4	2, Clear, 0.87, None,N,N	W	8.5ft.	7ft.	10.0	10.0	0.0	29	80	290 Btuh
5	2, Clear, 0.87, None,N,N	NE	2ft.	1.5ft.	3.0	0.0	3.0	29	60	180 Btuh
6	2, Clear, 0.87, None,N,N	SE	9.5ft.	7.5ft.	6.0	6.0	0.0	29	63	174 Btuh
7	2, Clear, 0.87, None,N,N	SE	2ft.	5.5ft.	30.0	17.2	12.8	29	63	1299 Btuh
8	2, Clear, 0.87, None,N,N	SE	2ft.	8ft.	30.0	2.2	27.8	29	63	1803 Btuh
9	2, Clear, 0.87, None,N,N	SW	1.5ft.	1.5ft.	2.0	2.0	0.0	29	63	58 Btuh
10	2, Clear, 0.87, None,N,N	SW	1.5ft.	5.5ft.	30.0	12.1	17.9	29	63	1468 Btuh
	Window Total				211 (sqft)					10965 Btuh

Walls	Type	R-Value/U-Value	Area(sqft)	HTM	Load
1	Frame - Wood - Adj	13.0/0.09	204.0	1.5	308 Btuh
2	Frame - Wood - Ext	13.0/0.09	1073.0	2.1	2238 Btuh
	Wall Total		1277 (sqft)		2546 Btuh

Doors	Type	Area (sqft)	HTM	Load
1	Insulated - Adjacent	20.0	9.8	196 Btuh
2	Insulated - Exterior	20.0	9.8	196 Btuh
3	Insulated - Exterior	20.0	9.8	196 Btuh
	Door Total	60 (sqft)		588 Btuh

Ceilings	Type/Color/Surface	R-Value	Area(sqft)	HTM	Load
1	Vented Attic/DarkShingle	30.0	1558.0	1.7	2580 Btuh
	Ceiling Total		1558 (sqft)		2580 Btuh

Floors	Type	R-Value	Size	HTM	Load
1	Slab On Grade	0.0	196 (ft(p))	0.0	0 Btuh
	Floor Total		196.0 (sqft)		0 Btuh

	Zone Envelope Subtotal:	16679 Btuh

Infiltration	Type	ACH	Volume(cuft)	CFM=	Load
	SensibleNatural	0.49	12088	98.7	1837 Btuh

Internal gain	Occupants	Btuh/occupant	Appliance	Load
	6	X 230 +	0	1380 Btuh

Duct load	Average sealed, R6.0, Supply(Attic), Return(Attic) DGM = 0.00	0.0 Btuh
	Sensible Zone Load	**19896 Btuh**

Manual J Summer Calculations

Residential Load - Component Details (continued)

Model Home

Lake City, FL

Project Title:
608234TheSamuelModel

Class 3 Rating
Registration No. 0
Climate: North

9/7/2006

WHOLE HOUSE TOTALS

Whole House Totals for Cooling	**Sensible Envelope Load All Zones**	**19896**	**Btuh**
	Sensible Duct Load	0	Btuh
	Total Sensible Zone Loads	**19896**	**Btuh**
	Sensible ventilation	0	Btuh
	Blower	0	Btuh
	Total sensible gain	**19896**	**Btuh**
	Latent infiltration gain (for 54 gr. humidity difference)	3608	Btuh
	Latent ventilation gain	0	Btuh
	Latent duct gain	0	Btuh
	Latent occupant gain (6 people @ 200 Btuh per person)	1200	Btuh
	Latent other gain	0	Btuh
	Latent total gain	**4808**	**Btuh**
	TOTAL GAIN	**24704**	**Btuh**

*Key: Window types (Pn - Number of panes of glass)
(SHGC - Shading coefficient of glass as SHGC numerical value or as clear or tint)
(U - Window U-Factor or 'DEF' for default)
(InSh - Interior shading device: none(N), Blinds(B), Draperies(D) or Roller Shades(R))
(ExSh - Exterior shading device: none(N) or numerical value)
(BS - Insect screen: none(N), Full(F) or Half(H))
(Ornt - compass orientation)

For Florida residences only

System Sizing Calculations - Summer

Residential Load - Room by Room Component Details

Model Home | Project Title: 608234TheSamuelModel | Class 3 Rating
Registration No. 0
Lake City, FL | Climate: North

Reference City: Gainesville (Defaults) Summer Temperature Difference: 17.0 F 9/7/2006
This calculation is for Worst Case. The house has been rotated 315 degrees.

Component Loads for Zone #1: Main

Window	Type* Pn/SHGC/U/InSh/ExSh/IS	Ornt	Overhang Len	Overhang Hgt	Window Area(sqft) Gross	Shaded	Unshaded	HTM Shaded	HTM Unshaded	Load
1	2, Clear, 0.87, None,N,N	NW	2ft.	5.5ft.	45.0	0.0	45.0	29	60	2702 Btuh
2	2, Clear, 0.87, None,N,N	N	6.5ft.	5.5ft.	10.0	0.0	10.0	29	29	290 Btuh
3	2, Clear, 0.87, None,N,N	NW	12ft.	5.25f	45.0	0.0	45.0	29	60	2702 Btuh
4	2, Clear, 0.87, None,N,N	W	8.5ft.	7ft.	10.0	10.0	0.0	29	80	290 Btuh
5	2, Clear, 0.87, None,N,N	NE	2ft.	1.5ft.	3.0	0.0	3.0	29	60	180 Btuh
6	2, Clear, 0.87, None,N,N	SE	9.5ft.	7.5ft.	6.0	6.0	0.0	29	63	174 Btuh
7	2, Clear, 0.87, None,N,N	SE	2ft.	5.5ft.	30.0	17.2	12.8	29	63	1299 Btuh
8	2, Clear, 0.87, None,N,N	SE	2ft.	8ft.	30.0	2.2	27.8	29	63	1803 Btuh
9	2, Clear, 0.87, None,N,N	SW	1.5ft.	1.5ft.	2.0	2.0	0.0	29	63	58 Btuh
10	2, Clear, 0.87, None,N,N	SW	1.5ft.	5.5ft.	30.0	12.1	17.9	29	63	1468 Btuh
	Window Total				211 (sqft)					10965 Btuh

Walls	Type	R-Value/U-Value	Area(sqft)	HTM	Load
1	Frame - Wood - Adj	13.0/0.09	204.0	1.5	308 Btuh
2	Frame - Wood - Ext	13.0/0.09	1073.0	2.1	2238 Btuh
	Wall Total		1277 (sqft)		2546 Btuh

Doors	Type	Area (sqft)	HTM	Load
1	Insulated - Adjacent	20.0	9.8	196 Btuh
2	Insulated - Exterior	20.0	9.8	196 Btuh
3	Insulated - Exterior	20.0	9.8	196 Btuh
	Door Total	60 (sqft)		588 Btuh

Ceilings	Type/Color/Surface	R-Value	Area(sqft)	HTM	Load
1	Vented Attic/DarkShingle	30.0	1558.0	1.7	2580 Btuh
	Ceiling Total		1558 (sqft)		2580 Btuh

Floors	Type	R-Value	Size	HTM	Load
1	Slab On Grade	0.0	196 (ft(p))	0.0	0 Btuh
	Floor Total		196.0 (sqft)		0 Btuh

	Zone Envelope Subtotal:	16679 Btuh

Infiltration	Type	ACH	Volume(cuft)	CFM=	Load
	SensibleNatural	0.49	12088	98.7	1837 Btuh

Internal gain	Occupants	Btuh/occupant	Appliance	Load
	6	X 230 +	0	1380 Btuh

Duct load	Average sealed, R6.0, Supply(Attic), Return(Attic) DGM = 0.00	0.0 Btuh
	Sensible Zone Load	**19896 Btuh**

Manual J Summer Calculations

Residential Load - Component Details (continued)

Model Home
Lake City, FL

Project Title:
608234TheSamuelModel

Class 3 Rating
Registration No. 0
Climate: North

9/7/2006

WHOLE HOUSE TOTALS

	Sensible Envelope Load All Zones	**19896 Btuh**
	Sensible Duct Load	0 Btuh
	Total Sensible Zone Loads	**19896 Btuh**
	Sensible ventilation	0 Btuh
	Blower	0 Btuh
Whole House	**Total sensible gain**	**19896 Btuh**
Totals for Cooling	Latent infiltration gain (for 54 gr. humidity difference)	3608 Btuh
	Latent ventilation gain	0 Btuh
	Latent duct gain	0 Btuh
	Latent occupant gain (6 people @ 200 Btuh per person)	1200 Btuh
	Latent other gain	0 Btuh
	Latent total gain	**4808 Btuh**
	TOTAL GAIN	**24704 Btuh**

*Key: Window types (Pn - Number of panes of glass)
(SHGC - Shading coefficient of glass as SHGC numerical value or as clear or tint)
(U - Window U-Factor or 'DEF' for default)
(InSh - Interior shading device: none(N), Blinds(B), Draperies(D) or Roller Shades(R))
(ExSh - Exterior shading device: none(N) or numerical value)
(BS - Insect screen: none(N), Full(F) or Half(H))
(Ornt - compass orientation)

For Florida residences only

Residential Window Diversity

MidSummer

Model Home

Lake City, FL

Project Title:
608234TheSamuelModel

Class 3 Rating
Registration No. 0
Climate: North

9/7/2006

Weather data for: Gainesville - Defaults

Summer design temperature	92 F	Average window load for July	9284 Btuh
Summer setpoint	75 F	Peak window load for July	14209 Btu
Summer temperature difference	17 F	Excusion limit(130% of Ave.)	12069 Btu
Latitude	29 North	Window excursion (July)	2140 Btuh

WINDOW Average and Peak Loads

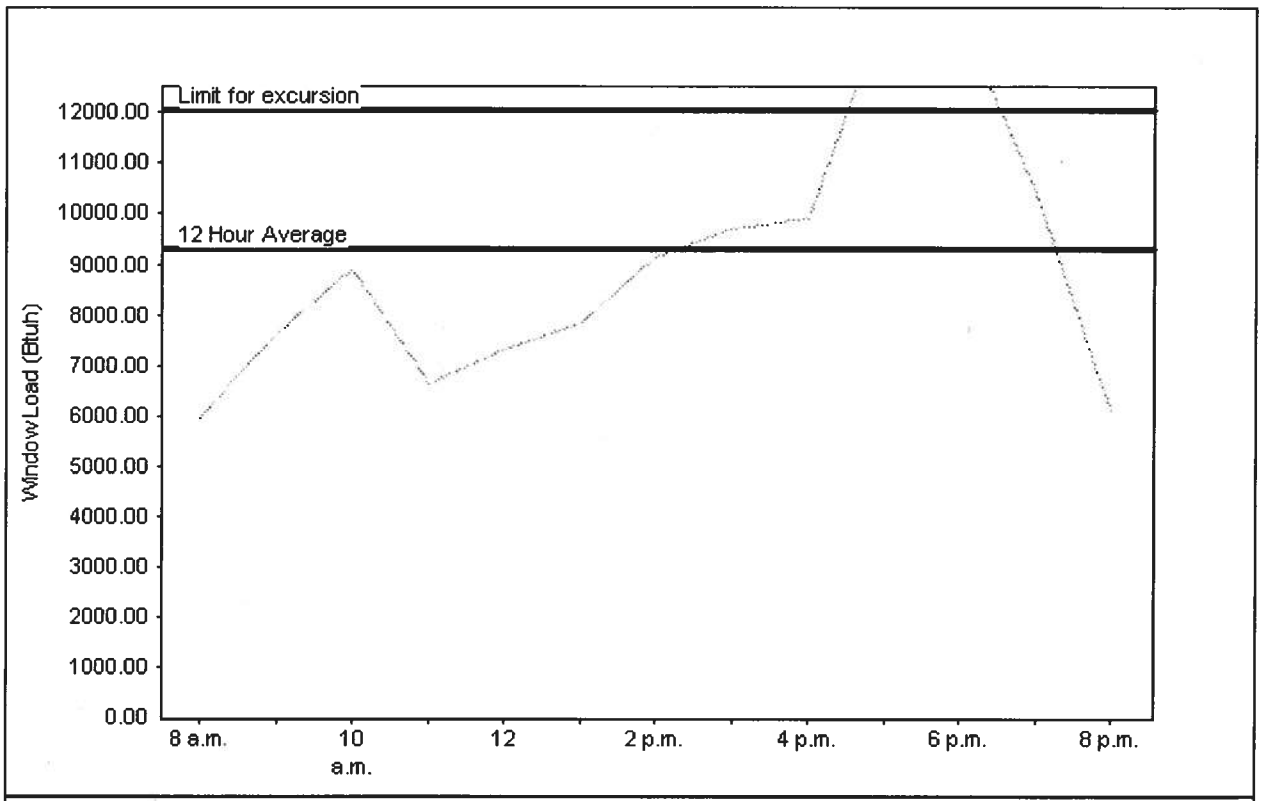

Total July Window Load(Radiation and conduction)

This application has glass areas that produce large heat gains for part of the day. Variable air volume devices are required to overcome spikes in solar gain for one or more rooms. Install a zoned system or provide zone control for problem rooms. Single speed equipment may not be suitable for the application.

EnergyGauge® System Sizing for Florida residences only
PREPARED BY: Greg Lowder
DATE: 9-7-06

EnergyGauge® FLR2PB v4.1

Project Information for:	L209085		
Builder:	CORNERSTONE	Date:	8/31/2006
Lot:	LOT 98 EMERALD COVE	Start Number:	**1162**
Subdivision:	N/A	SEI Ref:	L209085
County or City:	COLUMBIA COUNTY		
Truss Page Count:	34		

Truss Design Load Information (UNO) Design Program: MiTek

Gravity		**Wind**		**Building Code:**	**FBC2004**
Roof (psf):	**42**	Wind Standard:	**ASCE 7-02**		
Floor (psf):	55	Wind Speed (mph):	**110**		

Note: See individual truss drawings for special loading conditions

Building Designer, responsible for Structural Engineering: (See attached)

ZECHER, BRYAN C. CBC 054575
Address: PO BOX 815
LAKE CITY,FLORIDA 32056 Designer: **179**

Truss Design Engineer: Thomas, E. Miller, P.E., 56877 - Byron K. Anderson, PE FL 60987
Company: Structural Engineering and Inspections, Inc. EB 9196
Address 16105 N. Florida Ave, Ste B, Lutz, FL 33549 Phone: 813-849-5769

Notes:

1. Truss Design Engineer is responsible for the individual trusses as components only.
2. Determination as to the suitability and use of these truss components for the structure is the responsibility of the Building Designer of Record, as defined in ANSI/TPI
3. The seal date shown on the individual truss component drawings must match the seal date on this index sheet.
4. Trusses designed for veritcal loads only, unless noted otherwise.
5. Where hangers are shown, Carried Member hanger capacity per Simpson C-2006 (SYP/Full Nailing Value) as an individual component. Building Designer shall verify the suitablity and use of Carrying Member hanger capacity.

#	Truss ID	Dwg. #	Seal Date	#	Truss ID	Dwg. #	Seal Date
1	CJ1	0831061162	8/31/2006				
2	CJ3	0831061163	8/31/2006				
3	CJ3V	0831061164	8/31/2006				
4	CJ5	0831061165	8/31/2006				
5	CJ5V	0831061166	8/31/2006				
6	EJ5	0831061167	8/31/2006				
7	EJ7	0831061168	8/31/2006				
8	EJ7V	0831061169	8/31/2006				
9	HJ7	0831061170	8/31/2006				
10	HJ9	0831061171	8/31/2006				
11	HJ9V	0831061172	8/31/2006				
12	T01H	0831061173	8/31/2006				
13	T02	0831061174	8/31/2006				
14	T03H	0831061175	8/31/2006				
15	T04H	0831061176	8/31/2006				
16	T05	0831061177	8/31/2006				
17	T06	0831061178	8/31/2006				
18	T07	0831061179	8/31/2006				
19	T08	0831061180	8/31/2006				
20	T09T	0831061181	8/31/2006				
21	T10T	0831061182	8/31/2006				
22	T11T	0831061183	8/31/2006				
23	T12T	0831061184	8/31/2006				
24	T13T	0831061185	8/31/2006				
25	T14	0831061186	8/31/2006				
26	T15	0831061187	8/31/2006				
27	T16	0831061188	8/31/2006				
28	T17	0831061189	8/31/2006				
29	T18	0831061190	8/31/2006				
30	T19	0831061191	8/31/2006				
31	T20	0831061192	8/31/2006				
32	T21	0831061193	8/31/2006				
33	T22	0831061194	8/31/2006				
34	T23	0831061195	8/31/2006				

AUG 3 1 2006

10:00:13 AM

Licensee Details

Licensee Information

Name:	**ZECHER, BRYAN CHRISTIAN (Primary Name)**
	BRYAN ZECHER CONSTRUCTION INC (DBA
Main Address:	**P O BOX 815** **LAKE CITY, Florida 32056**
Lic. Location:	**465 NW ORANGE ST** **LAKE CITY, FL 32055 United States** **Columbia**

License Information

License Type:	**Certified Building Contractor**
Rank:	**Cert Building**
License Number:	**CBC054575**
Status:	**Current, Active**
Licensure Date:	**12/05/1991**
Expires:	**08/31/2006**

Special Qualifications	Effective Date
Bldg Code Core Course Credit	
Qualified Business License Required	04/13/2004

View Related License Information

View License Complaint

New Search

AUGUST 31, 2006 TRUSS DESIGN ENGINEER:
THOMAS E. MILLER PE 56877, BYRON K. ANDERSON PE 60987
STRUCTURAL ENGINEERING AND INSPECTIONS INC ; EB 9186
16105 N. FLORIDA AVE. STE B, LUTZ, FL 33549

Dwg.#0831061162

Job	Truss	Truss Type	Qty	Ply	CORNERSTONE-SAMUEL EC
L209085	CJ1	JACK	10	1	Job Reference (optional)

Builders FirstSource, Lake City, Fl 32055 — 6.200 s Jul 13 2005 MiTek Industries, Inc. Thu Aug 31 13:39:09 2006 Page 1

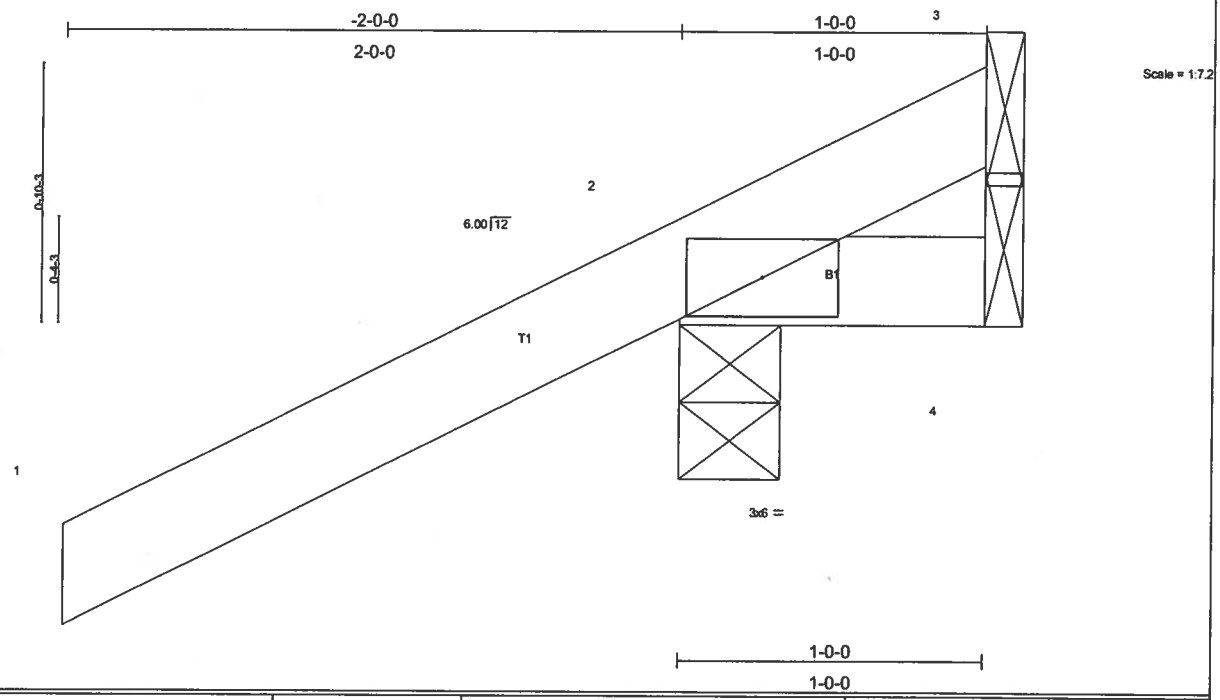

LOADING (psf)		SPACING	2-0-0	CSI		DEFL	in	(loc)	l/defl	L/d	PLATES	GRIP
TCLL	20.0	Plates Increase	1.25	TC	0.28	Vert(LL)	-0.00	2	>999	240	MT20	244/190
TCDL	7.0	Lumber Increase	1.25	BC	0.01	Vert(TL)	-0.00	2	>999	180		
BCLL	10.0	Rep Stress Incr	YES	WB	0.00	Horz(TL)	0.00	3	n/a	n/a		
BCDL	5.0	Code FBC2004/TPI2002		(Matrix)							Weight: 7 lb	

LUMBER
TOP CHORD 2 X 4 SYP No.2
BOT CHORD 2 X 4 SYP No.2

BRACING
TOP CHORD Structural wood sheathing directly applied or 1-0-0 oc purlins.
BOT CHORD Rigid ceiling directly applied or 10-0-0 oc bracing.

REACTIONS (lb/size) 2=267/0-4-0, 4=14/Mechanical, 3=-91/Mechanical
Max Horz 2=87(load case 5)
Max Uplift2=-275(load case 5), 3=-91(load case 1)
Max Grav 2=267(load case 1), 4=14(load case 1), 3=128(load case 5)

FORCES (lb) - Maximum Compression/Maximum Tension
TOP CHORD 1-2=0/47, 2-3=-69/76
BOT CHORD 2-4=0/0

JOINT STRESS INDEX
2 = 0.14

NOTES
1) Wind: ASCE 7-02; 110mph (3-second gust); h=20ft; TCDL=4.2psf; BCDL=3.0psf; Category II; Exp B; enclosed; MWFRS gable end zone and C-C Exterior(2) zone; Lumber DOL=1.60 plate grip DOL=1.60. This truss is designed for C-C for members and forces, and for MWFRS for reactions specified.
2) Refer to girder(s) for truss to truss connections.
3) All bearings are assumed to be SYP No.2 crushing capacity of 565.00 psi
4) Provide mechanical connection (by others) of truss to bearing plate capable of withstanding 275 lb uplift at joint 2 and 91 lb uplift at joint 3.

LOAD CASE(S) Standard

AUGUST 31, 2006 TRUSS DESIGN ENGINEER:
THOMAS E. MILLER PE 56877, BYRON K. ANDERSON PE 60987
STRUCTURAL ENGINEERING AND INSPECTIONS, INC. EB 9196
16105 N. FLORIDA AVE. STE B, LUTZ, FL 33549

Dwg.#0831061163

Job	Truss	Truss Type	Qty	Ply	CORNERSTONE-SAMUEL EC
L209085	CJ3	JACK	10	1	Job Reference (optional)

Builders FirstSource, Lake City, Fl 32055

6.200 s Jul 13 2005 MiTek Industries, Inc. Thu Aug 31 13:39:13 2006 Page 1

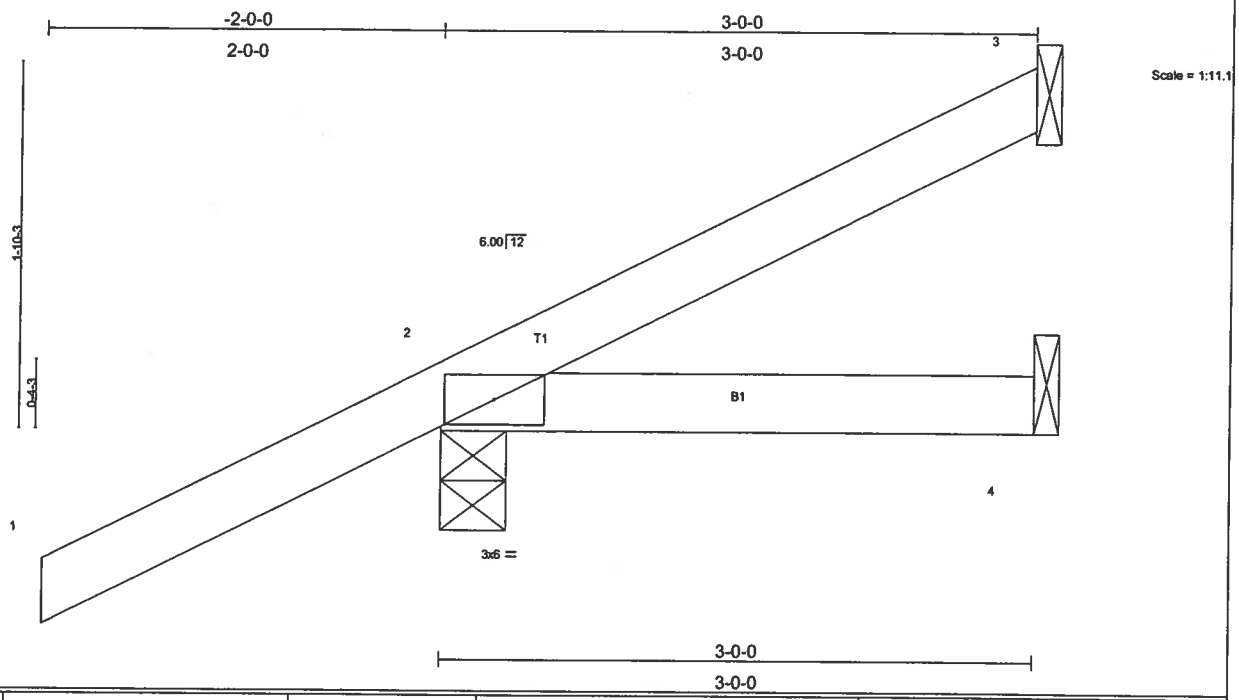

LOADING (psf)		SPACING	2-0-0	CSI		DEFL	in	(loc)	l/defl	L/d	PLATES	GRIP
TCLL	20.0	Plates Increase	1.25	TC	0.30	Vert(LL)	-0.00	2-4	>999	240	MT20	244/190
TCDL	7.0	Lumber Increase	1.25	BC	0.05	Vert(TL)	-0.01	2-4	>999	180		
BCLL	10.0	Rep Stress Incr	YES	WB	0.00	Horz(TL)	-0.00	3	n/a	n/a		
BCDL	5.0	Code FBC2004/TPI2002		(Matrix)							Weight: 13 lb	

LUMBER
TOP CHORD 2 X 4 SYP No.2
BOT CHORD 2 X 4 SYP No.2

BRACING
TOP CHORD Structural wood sheathing directly applied or 3-0-0 oc purlins.
BOT CHORD Rigid ceiling directly applied or 10-0-0 oc bracing.

REACTIONS (lb/size) 3=29/Mechanical, 2=279/0-4-0, 4=42/Mechanical
Max Horz 2=132(load case 5)
Max Uplift3=-27(load case 6), 2=-205(load case 5)

FORCES (lb) - Maximum Compression/Maximum Tension
TOP CHORD 1-2=0/47, 2-3=-58/7
BOT CHORD 2-4=0/0

JOINT STRESS INDEX
2 = 0.13

NOTES
1) Wind: ASCE 7-02; 110mph (3-second gust); h=20ft; TCDL=4.2psf; BCDL=3.0psf; Category II; Exp B; enclosed; MWFRS gable end zone and C-C Exterior(2) zone; Lumber DOL=1.60 plate grip DOL=1.60. This truss is designed for C-C for members and forces, and for MWFRS for reactions specified.
2) Refer to girder(s) for truss to truss connections.
3) All bearings are assumed to be SYP No.2 crushing capacity of 565.00 psi
4) Provide mechanical connection (by others) of truss to bearing plate capable of withstanding 27 lb uplift at joint 3 and 205 lb uplift at joint 2.

LOAD CASE(S) Standard

AUGUST 31, 2006 TRUSS DESIGN ENGINEER:
THOMAS E. MILLER PE 56877, BYRON K. ANDERSON PE 60987
STRUCTURAL ENGINEERING AND INSPECTIONS, INC. EB 9196
16105 N. FLORIDA AVE. STE B, LUTZ, FL 33549

Dwg.#0831061164

Job	Truss	Truss Type	Qty	Ply	CORNERSTONE-SAMUEL EC
L209085	CJ3V	MONO SCISSOR	4	1	Job Reference (optional)

Builders FirstSource, Lake City, Fl 32055

6.200 s Jul 13 2005 MiTek Industries, Inc. Thu Aug 31 13:39:18 2006 Page 1

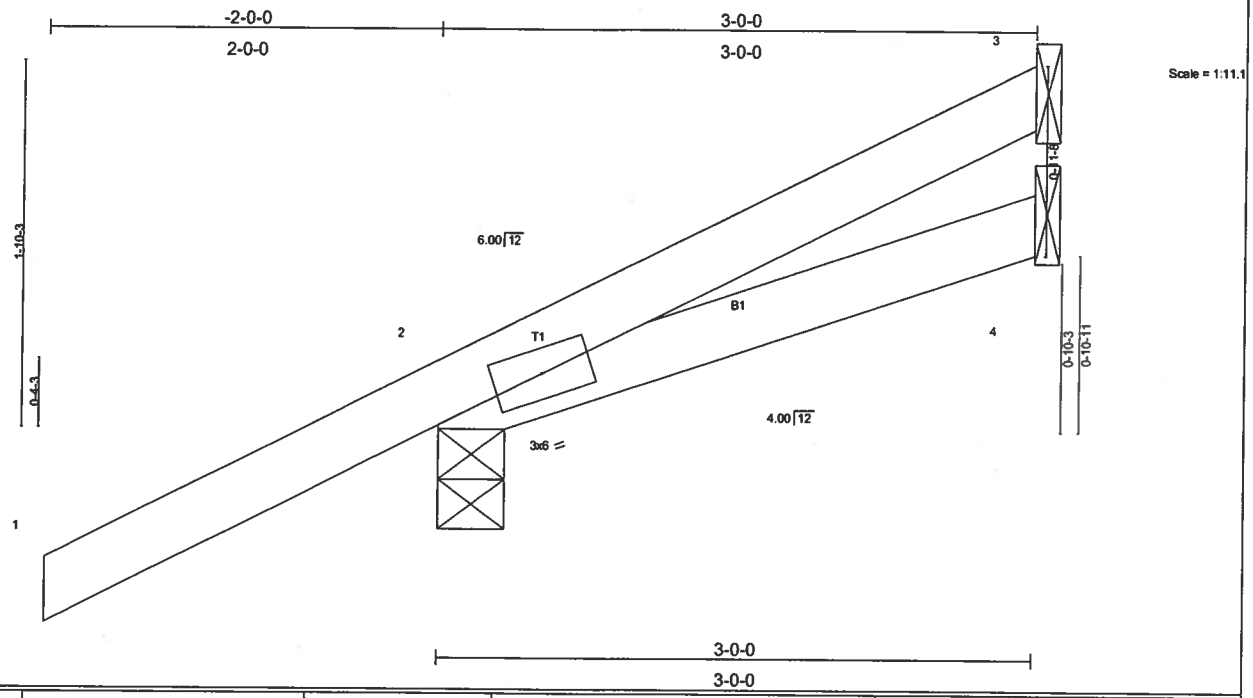

LOADING (psf)		SPACING	2-0-0	CSI		DEFL	in	(loc)	l/defl	L/d	PLATES	GRIP
TCLL	20.0	Plates Increase	1.25	TC	0.29	Vert(LL)	-0.00	2-4	>999	240	MT20	244/190
TCDL	7.0	Lumber Increase	1.25	BC	0.05	Vert(TL)	-0.01	2-4	>999	180		
BCLL	10.0	Rep Stress Incr	YES	WB	0.00	Horz(TL)	-0.00	3	n/a	n/a		
BCDL	5.0	Code FBC2004/TPI2002		(Matrix)							Weight: 13 lb	

LUMBER
TOP CHORD 2 X 4 SYP No.2
BOT CHORD 2 X 4 SYP No.2

BRACING
TOP CHORD Structural wood sheathing directly applied or 3-0-0 oc purlins.
BOT CHORD Rigid ceiling directly applied or 10-0-0 oc bracing.

REACTIONS (lb/size) 3=29/Mechanical, 2=279/0-4-0, 4=42/Mechanical
Max Horz 2=131(load case 5)
Max Uplift3=-29(load case 6), 2=-203(load case 5)

FORCES (lb) - Maximum Compression/Maximum Tension
TOP CHORD 1-2=0/45, 2-3=-59/7
BOT CHORD 2-4=-11/11

JOINT STRESS INDEX
2 = 0.10

NOTES
1) Wind: ASCE 7-02; 110mph (3-second gust); h=20ft; TCDL=4.2psf; BCDL=3.0psf; Category II; Exp B; enclosed; MWFRS gable end zone and C-C Exterior(2) zone; Lumber DOL=1.60 plate grip DOL=1.60. This truss is designed for C-C for members and forces, and for MWFRS for reactions specified.
2) Refer to girder(s) for truss to truss connections.
3) All bearings are assumed to be SYP No.2 crushing capacity of 565.00 psi
4) Bearing at joint(s) 2 considers parallel to grain value using ANSI/TPI 1 angle to grain formula. Building designer should verify capacity of bearing surface.
5) Provide mechanical connection (by others) of truss to bearing plate capable of withstanding 29 lb uplift at joint 3 and 203 lb uplift at joint 2.

LOAD CASE(S) Standard

AUGUST 31, 2006 TRUSS DESIGN ENGINEER:
THOMAS E. MILLER PE 56877, BYRON K. ANDERSON PE 60987
STRUCTURAL ENGINEERING AND INSPECTIONS, INC. EB 9196
16105 N. FLORIDA AVE. STE B, LUTZ, FL 33549

Dwg.#0831061165

Job	Truss	Truss Type	Qty	Ply	CORNERSTONE-SAMUEL EC
L209085	CJ5	JACK	6	1	Job Reference (optional)

Builders FirstSource, Lake City, Fl 32055

6.200 s Jul 13 2005 MiTek Industries, Inc. Thu Aug 31 13:39:21 2006 Page 1

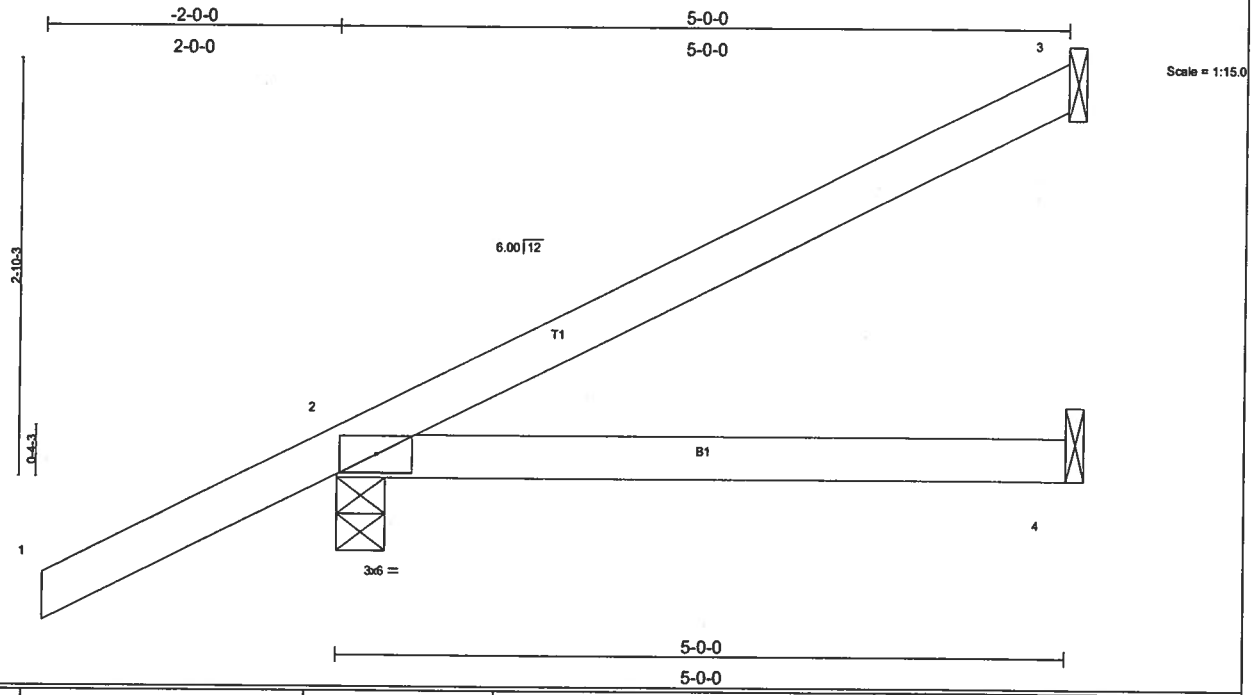

LOADING (psf)		SPACING	2-0-0	CSI		DEFL	in	(loc)	l/defl	L/d	PLATES	GRIP
TCLL	20.0	Plates Increase	1.25	TC	0.30	Vert(LL)	-0.03	2-4	>999	240	MT20	244/190
TCDL	7.0	Lumber Increase	1.25	BC	0.16	Vert(TL)	-0.05	2-4	>999	180		
BCLL	10.0	Rep Stress Incr	YES	WB	0.00	Horz(TL)	-0.00	3	n/a	n/a		
BCDL	5.0	Code FBC2004/TPI2002		(Matrix)							Weight: 19 lb	

LUMBER
TOP CHORD 2 X 4 SYP No.2
BOT CHORD 2 X 4 SYP No.2

BRACING
TOP CHORD Structural wood sheathing directly applied or 5-0-0 oc purlins.
BOT CHORD Rigid ceiling directly applied or 10-0-0 oc bracing.

REACTIONS (lb/size) 3=102/Mechanical, 2=344/0-4-0, 4=72/Mechanical
Max Horz 2=178(load case 5)
Max Uplift3=-86(load case 5), 2=-201(load case 5)

FORCES (lb) - Maximum Compression/Maximum Tension
TOP CHORD 1-2=0/47, 2-3=-87/36
BOT CHORD 2-4=0/0

JOINT STRESS INDEX
2 = 0.15

NOTES
1) Wind: ASCE 7-02; 110mph (3-second gust); h=20ft; TCDL=4.2psf; BCDL=3.0psf; Category II; Exp B; enclosed; MWFRS gable end zone and C-C Exterior(2) zone; Lumber DOL=1.60 plate grip DOL=1.60. This truss is designed for C-C for members and forces, and for MWFRS for reactions specified.
2) Refer to girder(s) for truss to truss connections.
3) All bearings are assumed to be SYP No.2 crushing capacity of 565.00 psi
4) Provide mechanical connection (by others) of truss to bearing plate capable of withstanding 86 lb uplift at joint 3 and 201 lb uplift at joint 2.

LOAD CASE(S) Standard

AUGUST 31, 2006 TRUSS DESIGN ENGINEER:
THOMAS E. MILLER PE 56877, BYRON K. ANDERSON PE 60987
STRUCTURAL ENGINEERING AND INSPECTIONS, INC. EB 9196
16105 N. FLORIDA AVE. STE B, LUTZ, FL 33549

Dwg.#0831061166

Job	Truss	Truss Type	Qty	Ply	CORNERSTONE-SAMUEL EC
L209085	CJ5V	MONO SCISSOR	2	1	Job Reference (optional)

Builders FirstSource, Lake City, Fl 32055

6.200 s Jul 13 2005 MiTek Industries, Inc. Thu Aug 31 13:39:24 2006 Page 1

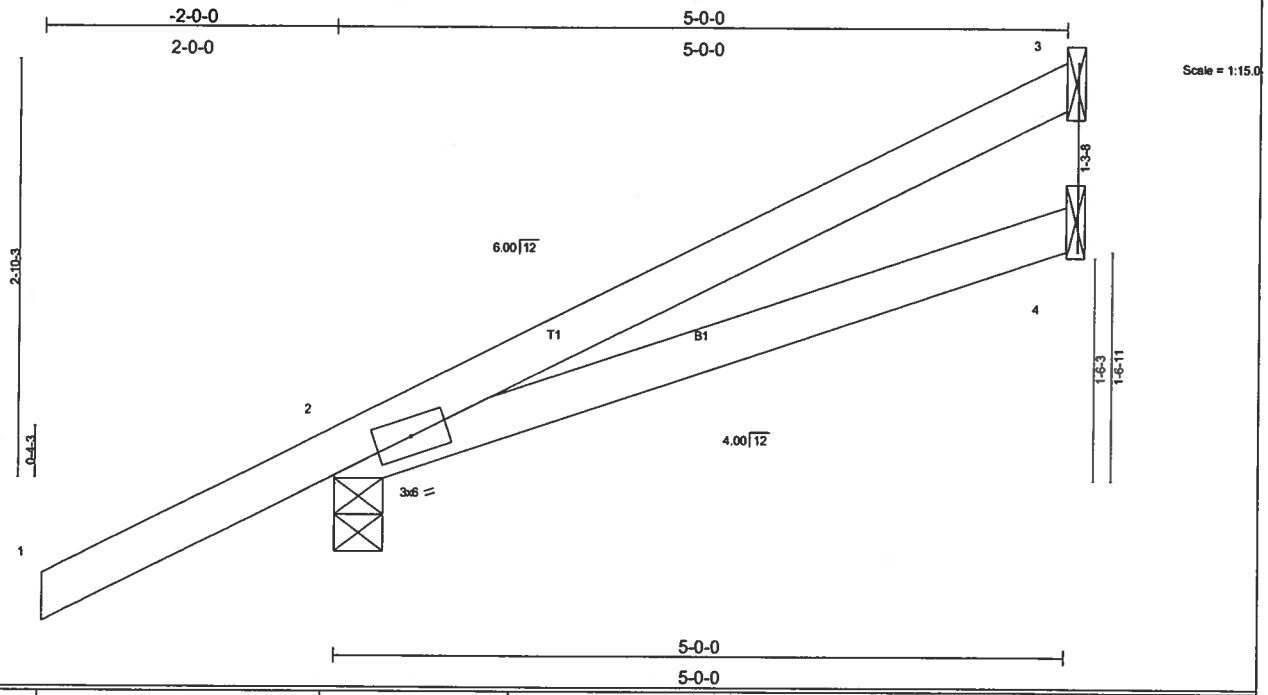

LOADING (psf)		SPACING	2-0-0	CSI		DEFL	in	(loc)	l/defl	L/d	PLATES	GRIP
TCLL	20.0	Plates Increase	1.25	TC	0.29	Vert(LL)	-0.03	2-4	>999	240	MT20	244/190
TCDL	7.0	Lumber Increase	1.25	BC	0.16	Vert(TL)	-0.05	2-4	>999	180		
BCLL	10.0	Rep Stress Incr	YES	WB	0.00	Horz(TL)	-0.00	3	n/a	n/a		
BCDL	5.0	Code FBC2004/TPI2002		(Matrix)							Weight: 20 lb	

LUMBER
TOP CHORD 2 X 4 SYP No.2
BOT CHORD 2 X 4 SYP No.2

BRACING
TOP CHORD Structural wood sheathing directly applied or 5-0-0 oc purlins.
BOT CHORD Rigid ceiling directly applied or 10-0-0 oc bracing.

REACTIONS (lb/size) 3=102/Mechanical, 2=344/0-4-0, 4=72/Mechanical
Max Horz 2=177(load case 5)
Max Uplift3=-88(load case 5), 2=-199(load case 5)

FORCES (lb) - Maximum Compression/Maximum Tension
TOP CHORD 1-2=0/45, 2-3=-90/36
BOT CHORD 2-4=-18/18

JOINT STRESS INDEX
2 = 0.11

NOTES
1) Wind: ASCE 7-02; 110mph (3-second gust); h=20ft; TCDL=4.2psf; BCDL=3.0psf; Category II; Exp B; enclosed; MWFRS gable end zone and C-C Exterior(2) zone; Lumber DOL=1.60 plate grip DOL=1.60. This truss is designed for C-C for members and forces, and for MWFRS for reactions specified.
2) Refer to girder(s) for truss to truss connections.
3) All bearings are assumed to be SYP No.2 crushing capacity of 565.00 psi
4) Bearing at joint(s) 2 considers parallel to grain value using ANSI/TPI 1 angle to grain formula. Building designer should verify capacity of bearing surface.
5) Provide mechanical connection (by others) of truss to bearing plate capable of withstanding 88 lb uplift at joint 3 and 199 lb uplift at joint 2.

LOAD CASE(S) Standard

AUGUST 31, 2006 TRUSS DESIGN ENGINEER:
THOMAS E. MILLER PE 56877, BYRON K. ANDERSON PE 60987
STRUCTURAL ENGINEERING AND INSPECTIONS, INC. EB 9196
16105 N. FLORIDA AVE. STE B, LUTZ, FL 33549

Dwg.#0831061167

Job	Truss	Truss Type	Qty	Ply	CORNERSTONE-SAMUEL EC
L209085	EJ5	JACK	2	1	Job Reference (optional)

Builders FirstSource, Lake City, Fl 32055

6.200 s Jul 13 2005 MiTek Industries, Inc. Thu Aug 31 13:39:27 2006 Page 1

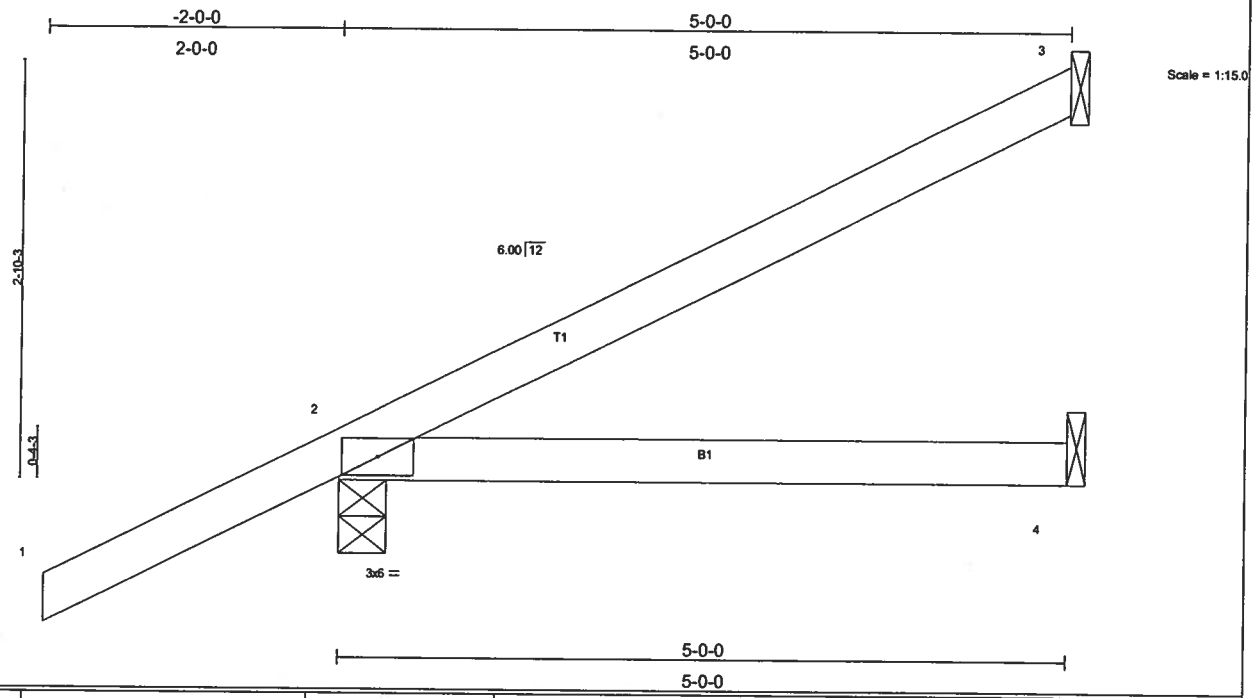

LOADING (psf)		SPACING	2-0-0	CSI		DEFL	in	(loc)	l/defl	L/d	PLATES	GRIP
TCLL	20.0	Plates Increase	1.25	TC	0.30	Vert(LL)	-0.03	2-4	>999	240	MT20	244/190
TCDL	7.0	Lumber Increase	1.25	BC	0.16	Vert(TL)	-0.05	2-4	>999	180		
BCLL	10.0	Rep Stress Incr	YES	WB	0.00	Horz(TL)	-0.00	3	n/a	n/a		
BCDL	5.0	Code FBC2004/TPI2002		(Matrix)							Weight: 19 lb	

LUMBER
TOP CHORD 2 X 4 SYP No.2
BOT CHORD 2 X 4 SYP No.2

BRACING
TOP CHORD Structural wood sheathing directly applied or 5-0-0 oc purlins.
BOT CHORD Rigid ceiling directly applied or 10-0-0 oc bracing.

REACTIONS (lb/size) 3=102/Mechanical, 2=344/0-4-0, 4=72/Mechanical
Max Horz 2=178(load case 5)
Max Uplift3=-86(load case 5), 2=-201(load case 5)

FORCES (lb) - Maximum Compression/Maximum Tension
TOP CHORD 1-2=0/47, 2-3=-87/36
BOT CHORD 2-4=0/0

JOINT STRESS INDEX
2 = 0.15

NOTES
1) Wind: ASCE 7-02; 110mph (3-second gust); h=20ft; TCDL=4.2psf; BCDL=3.0psf; Category II; Exp B; enclosed; MWFRS gable end zone and C-C Exterior(2) zone; Lumber DOL=1.60 plate grip DOL=1.60. This truss is designed for C-C for members and forces, and for MWFRS for reactions specified.
2) Refer to girder(s) for truss to truss connections.
3) All bearings are assumed to be SYP No.2 crushing capacity of 565.00 psi
4) Provide mechanical connection (by others) of truss to bearing plate capable of withstanding 86 lb uplift at joint 3 and 201 lb uplift at joint 2.

LOAD CASE(S) Standard

AUGUST 31, 2006 TRUSS DESIGN ENGINEER:
THOMAS E. MILLER PE 56877, BYRON K. ANDERSON PE 60987
STRUCTURAL ENGINEERING AND INSPECTIONS, INC. EB 9196
16105 N. FLORIDA AVE. STE B, LUTZ, FL 33549

Dwg.#0831061168

Job	Truss	Truss Type	Qty	Ply	CORNERSTONE-SAMUEL EC
L209085	EJ7	MONO TRUSS	20	1	Job Reference (optional)

Builders FirstSource, Lake City, Fl 32055

6.200 s Jul 13 2005 MiTek Industries, Inc. Thu Aug 31 13:39:31 2006 Page 1

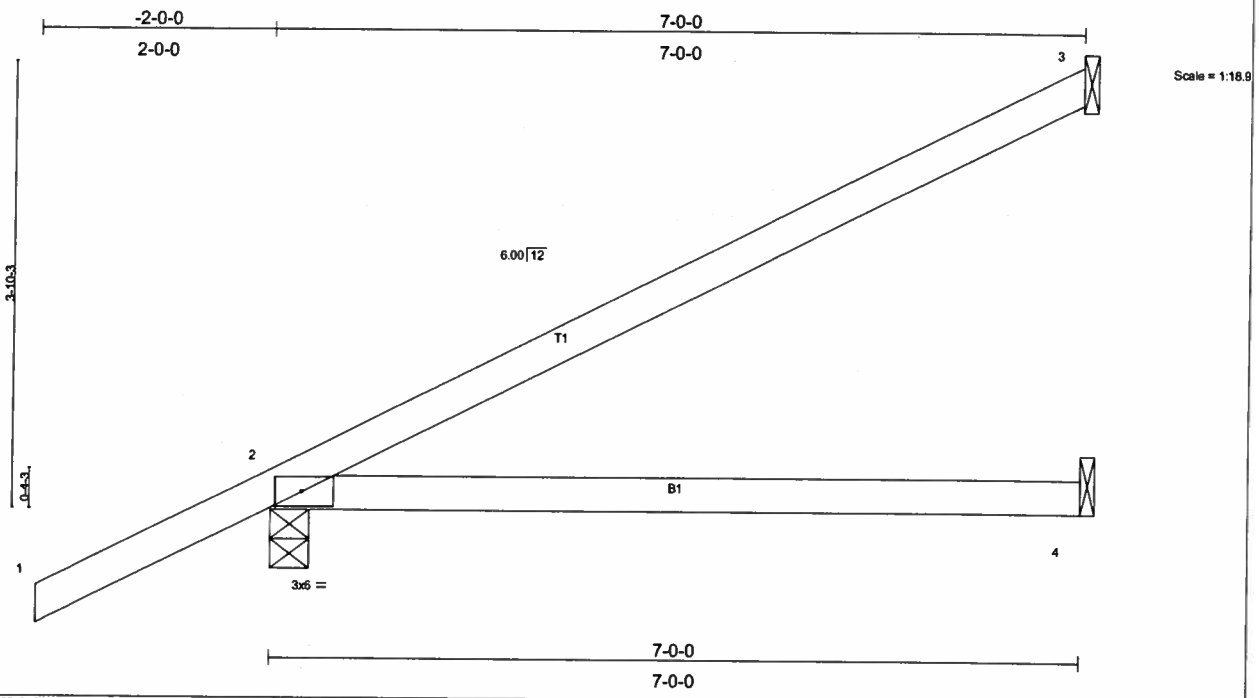

Plate Offsets (X,Y): [2:0-2-12,0-1-8]

LOADING (psf)		SPACING	2-0-0	CSI		DEFL	in	(loc)	l/defl	L/d	PLATES	GRIP
TCLL	20.0	Plates Increase	1.25	TC	0.48	Vert(LL)	-0.12	2-4	>674	240	MT20	244/190
TCDL	7.0	Lumber Increase	1.25	BC	0.34	Vert(TL)	-0.20	2-4	>403	180		
BCLL	10.0	Rep Stress Incr	YES	WB	0.00	Horz(TL)	-0.00	3	n/a	n/a		
BCDL	5.0	Code FBC2004/TPI2002		(Matrix)							Weight: 26 lb	

LUMBER
TOP CHORD 2 X 4 SYP No.2
BOT CHORD 2 X 4 SYP No.2

BRACING
TOP CHORD Structural wood sheathing directly applied or 6-0-0 oc purlins.
BOT CHORD Rigid ceiling directly applied or 10-0-0 oc bracing.

REACTIONS (lb/size) 3=162/Mechanical, 2=420/0-4-0, 4=104/Mechanical
Max Horz 2=224(load case 5)
Max Uplift3=-133(load case 5), 2=-211(load case 5)

FORCES (lb) - Maximum Compression/Maximum Tension
TOP CHORD 1-2=0/47, 2-3=-119/58
BOT CHORD 2-4=0/0

JOINT STRESS INDEX
2 = 0.72

NOTES
1) Wind: ASCE 7-02; 110mph (3-second gust); h=20ft; TCDL=4.2psf; BCDL=3.0psf; Category II; Exp B; enclosed; MWFRS gable end zone and C-C Exterior(2) zone; Lumber DOL=1.60 plate grip DOL=1.60. This truss is designed for C-C for members and forces, and for MWFRS for reactions specified.
2) Refer to girder(s) for truss to truss connections.
3) All bearings are assumed to be SYP No.2 crushing capacity of 565.00 psi
4) Provide mechanical connection (by others) of truss to bearing plate capable of withstanding 133 lb uplift at joint 3 and 211 lb uplift at joint 2.

LOAD CASE(S) Standard

AUGUST 31, 2006 TRUSS DESIGN ENGINEER:
THOMAS E. MILLER PE 56877, BYRON K. ANDERSON PE 60987
STRUCTURAL ENGINEERING AND INSPECTIONS, INC. EB 9196
16105 N. FLORIDA AVE. STE B, LUTZ, FL 33549

Dwg.#0831061169

Job	Truss	Truss Type	Qty	Ply	CORNERSTONE-SAMUEL EC
L209085	EJ7V	SPECIAL	7	1	Job Reference (optional)

Builders FirstSource, Lake City, Fl 32055

6.200 s Jul 13 2005 MiTek Industries, Inc. Thu Aug 31 13:39:34 2006 Page 1

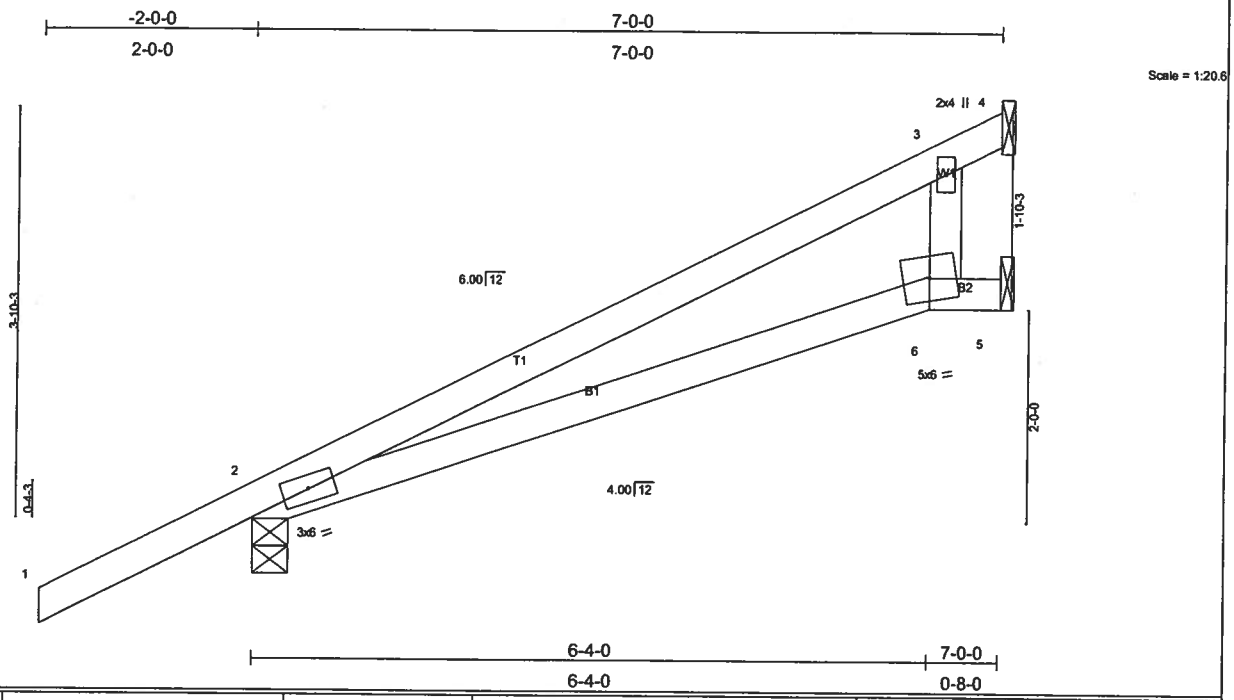

LOADING (psf)		SPACING	2-0-0	CSI		DEFL	in	(loc)	l/defl	L/d	PLATES	GRIP
TCLL	20.0	Plates Increase	1.25	TC	0.44	Vert(LL)	0.14	2-6	>577	240	MT20	244/190
TCDL	7.0	Lumber Increase	1.25	BC	0.35	Vert(TL)	-0.21	2-6	>380	180		
BCLL	10.0	Rep Stress Incr	YES	WB	0.08	Horz(TL)	0.02	5	n/a	n/a		
BCDL	5.0	Code FBC2004/TPI2002		(Matrix)							Weight: 28 lb	

LUMBER
TOP CHORD 2 X 4 SYP No.2
BOT CHORD 2 X 4 SYP No.2
WEBS 2 X 4 SYP No.3

BRACING
TOP CHORD Structural wood sheathing directly applied or 6-0-0 oc purlins.
BOT CHORD Rigid ceiling directly applied or 6-0-0 oc bracing.

REACTIONS (lb/size) 4=141/Mechanical, 2=420/0-4-0, 5=125/Mechanical
Max Horz 2=223(load case 5)
Max Uplift2=-209(load case 5), 5=-176(load case 5)

FORCES (lb) - Maximum Compression/Maximum Tension
TOP CHORD 1-2=0/45, 2-3=-175/53, 3-4=0/62
BOT CHORD 2-6=-30/48, 5-6=-1/2
WEBS 3-6=-26/308

JOINT STRESS INDEX
2 = 0.25, 3 = 0.16 and 6 = 0.72

NOTES
1) Wind: ASCE 7-02; 110mph (3-second gust); h=20ft; TCDL=4.2psf; BCDL=3.0psf; Category II; Exp B; enclosed; MWFRS gable end zone and C-C Exterior(2) zone; Lumber DOL=1.60 plate grip DOL=1.60. This truss is designed for C-C for members and forces, and for MWFRS for reactions specified.
2) Refer to girder(s) for truss to truss connections.
3) All bearings are assumed to be SYP No.2 crushing capacity of 565.00 psi
4) Bearing at joint(s) 2 considers parallel to grain value using ANSI/TPI 1 angle to grain formula. Building designer should verify capacity of bearing surface.
5) Provide mechanical connection (by others) of truss to bearing plate capable of withstanding 209 lb uplift at joint 2 and 176 lb uplift at joint 5.

LOAD CASE(S) Standard

AUGUST 31, 2006 TRUSS DESIGN ENGINEER:
THOMAS E. MILLER PE 56877, BYRON K. ANDERSON PE 60987
STRUCTURAL ENGINEERING AND INSPECTIONS, INC. EB 9196
16105 N. FLORIDA AVE. STE B, LUTZ, FL 33549

Dwg.#0831061170

Job	Truss	Truss Type	Qty	Ply	CORNERSTONE-SAMUEL EC
L209085	HJ7	MONO TRUSS	2	1	Job Reference (optional)

Builders FirstSource, Lake City, Fl 32055

6.200 s Jul 13 2005 MiTek Industries, Inc. Thu Aug 31 13:39:37 2006 Page 1

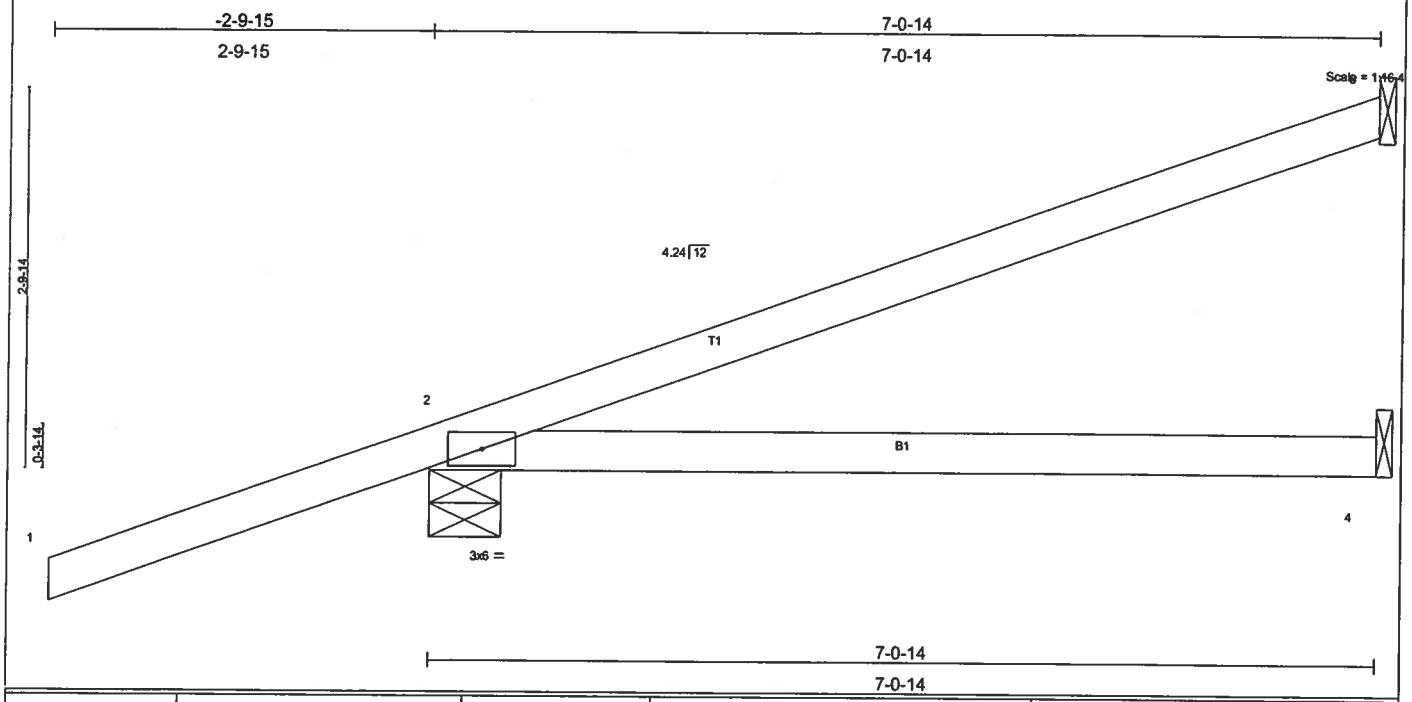

LOADING (psf)		SPACING	2-0-0	CSI		DEFL	in	(loc)	l/defl	L/d	PLATES	GRIP
TCLL	20.0	Plates Increase	1.25	TC	0.55	Vert(LL)	-0.07	2-4	>999	240	MT20	244/190
TCDL	7.0	Lumber Increase	1.25	BC	0.27	Vert(TL)	-0.13	2-4	>645	180		
BCLL	10.0	Rep Stress Incr	NO	WB	0.00	Horz(TL)	-0.00	3	n/a	n/a		
BCDL	5.0	Code FBC2004/TPI2002		(Matrix)							Weight: 26 lb	

LUMBER
TOP CHORD 2 X 4 SYP No.2
BOT CHORD 2 X 4 SYP No.2

BRACING
TOP CHORD Structural wood sheathing directly applied or 7-0-14 oc purlins.
BOT CHORD Rigid ceiling directly applied or 10-0-0 oc bracing.

REACTIONS (lb/size) 3=190/Mechanical, 2=381/0-6-7, 4=109/Mechanical
Max Horz 2=168(load case 2)
Max Uplift3=-143(load case 2), 2=-254(load case 2)

FORCES (lb) - Maximum Compression/Maximum Tension
TOP CHORD 1-2=0/50, 2-3=-68/45
BOT CHORD 2-4=0/0

JOINT STRESS INDEX
2 = 0.45

NOTES
1) Wind: ASCE 7-02; 110mph (3-second gust); h=20ft; TCDL=4.2psf; BCDL=3.0psf; Category II; Exp B; enclosed; MWFRS gable end zone; Lumber DOL=1.60 plate grip DOL=1.60.
2) Refer to girder(s) for truss to truss connections.
3) All bearings are assumed to be SYP No.2 crushing capacity of 565.00 psi
4) Provide mechanical connection (by others) of truss to bearing plate capable of withstanding 143 lb uplift at joint 3 and 254 lb uplift at joint 2.
5) In the LOAD CASE(S) section, loads applied to the face of the truss are noted as front (F) or back (B).

LOAD CASE(S) Standard
1) Regular: Lumber Increase=1.25, Plate Increase=1.25
Uniform Loads (plf)
Vert: 1-2=-54
Trapezoidal Loads (plf)
Vert: 2=-4(F=25, B=25)-to-3=-95(F=-21, B=-21), 2=0(F=15, B=15)-to-4=-53(F=-12, B=-12)

AUGUST 31, 2006 TRUSS DESIGN ENGINEER:
THOMAS E. MILLER PE 56877, BYRON K. ANDERSON PE 60987
STRUCTURAL ENGINEERING AND INSPECTIONS, INC. EB 9196
16105 N. FLORIDA AVE. STE B, LUTZ, FL 33549

Dwg.#0831061171

Job	Truss	Truss Type	Qty	Ply	CORNERSTONE-SAMUEL EC
L209085	HJ9	MONO TRUSS	3	1	Job Reference (optional)

Builders FirstSource, Lake City, Fl 32055

6.200 s Jul 13 2005 MiTek Industries, Inc. Thu Aug 31 13:39:40 2006 Page 1

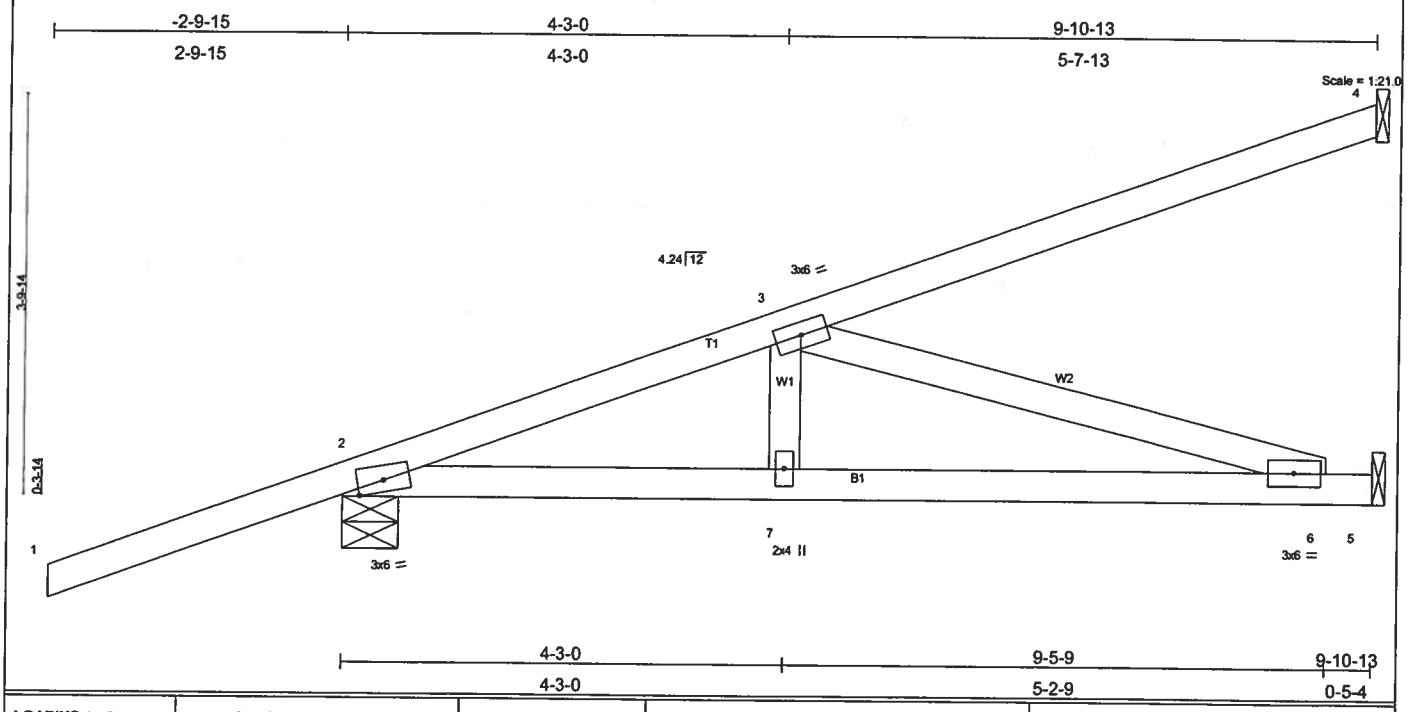

LOADING (psf)		SPACING	2-0-0	CSI		DEFL	in	(loc)	l/defl	L/d	PLATES	GRIP
TCLL	20.0	Plates Increase	1.25	TC	0.62	Vert(LL)	-0.11	6-7	>999	240	MT20	244/190
TCDL	7.0	Lumber Increase	1.25	BC	0.61	Vert(TL)	-0.18	6-7	>623	180		
BCLL	10.0	Rep Stress Incr	NO	WB	0.46	Horz(TL)	0.01	5	n/a	n/a		
BCDL	5.0	Code FBC2004/TPI2002		(Matrix)							Weight: 45 lb	

LUMBER
TOP CHORD 2 X 4 SYP No.2
BOT CHORD 2 X 4 SYP No.2
WEBS 2 X 4 SYP No.3

BRACING
TOP CHORD Structural wood sheathing directly applied or 6-0-0 oc purlins.
BOT CHORD Rigid ceiling directly applied or 10-0-0 oc bracing.

REACTIONS (lb/size) 4=270/Mechanical, 2=537/0-6-7, 5=372/Mechanical
Max Horz 2=269(load case 2)
Max Uplift4=-231(load case 2), 2=-284(load case 2), 5=-61(load case 2)

FORCES (lb) - Maximum Compression/Maximum Tension
TOP CHORD 1-2=0/50, 2-3=-876/116, 3-4=-105/66
BOT CHORD 2-7=-304/809, 6-7=-304/809, 5-6=0/0
WEBS 3-7=0/187, 3-6=-843/317

JOINT STRESS INDEX
2 = 0.76, 3 = 0.22, 6 = 0.24 and 7 = 0.14

NOTES
1) Wind: ASCE 7-02; 110mph (3-second gust); h=20ft; TCDL=4.2psf; BCDL=3.0psf; Category II; Exp B; enclosed; MWFRS gable end zone; Lumber DOL=1.60 plate grip DOL=1.60.
2) Refer to girder(s) for truss to truss connections.
3) All bearings are assumed to be SYP No.2 crushing capacity of 565.00 psi
4) Provide mechanical connection (by others) of truss to bearing plate capable of withstanding 231 lb uplift at joint 4, 284 lb uplift at joint 2 and 61 lb uplift at joint 5.
5) In the LOAD CASE(S) section, loads applied to the face of the truss are noted as front (F) or back (B).

LOAD CASE(S) Standard
1) Regular: Lumber Increase=1.25, Plate Increase=1.25
Uniform Loads (plf)
Vert: 1-2=-54
Trapezoidal Loads (plf)
Vert: 2=-4(F=25, B=25)-to-4=-134(F=-40, B=-40), 2=0(F=15, B=15)-to-5=-74(F=-22, B=-22)

AUGUST 31, 2006 TRUSS DESIGN ENGINEER:
THOMAS E. MILLER PE 56877, BYRON K. ANDERSON PE 60987
STRUCTURAL ENGINEERING AND INSPECTIONS, INC. EB 9196
16105 N. FLORIDA AVE. STE B, LUTZ, FL 33549

Dwg.#0831061172

Job	Truss	Truss Type	Qty	Ply	CORNERSTONE-SAMUEL EC
L209085	HJ9V	SPECIAL	1	1	Job Reference (optional)

Builders FirstSource, Lake City, Fl 32055

6.200 s Jul 13 2005 MiTek Industries, Inc. Thu Aug 31 13:39:43 2006 Page 1

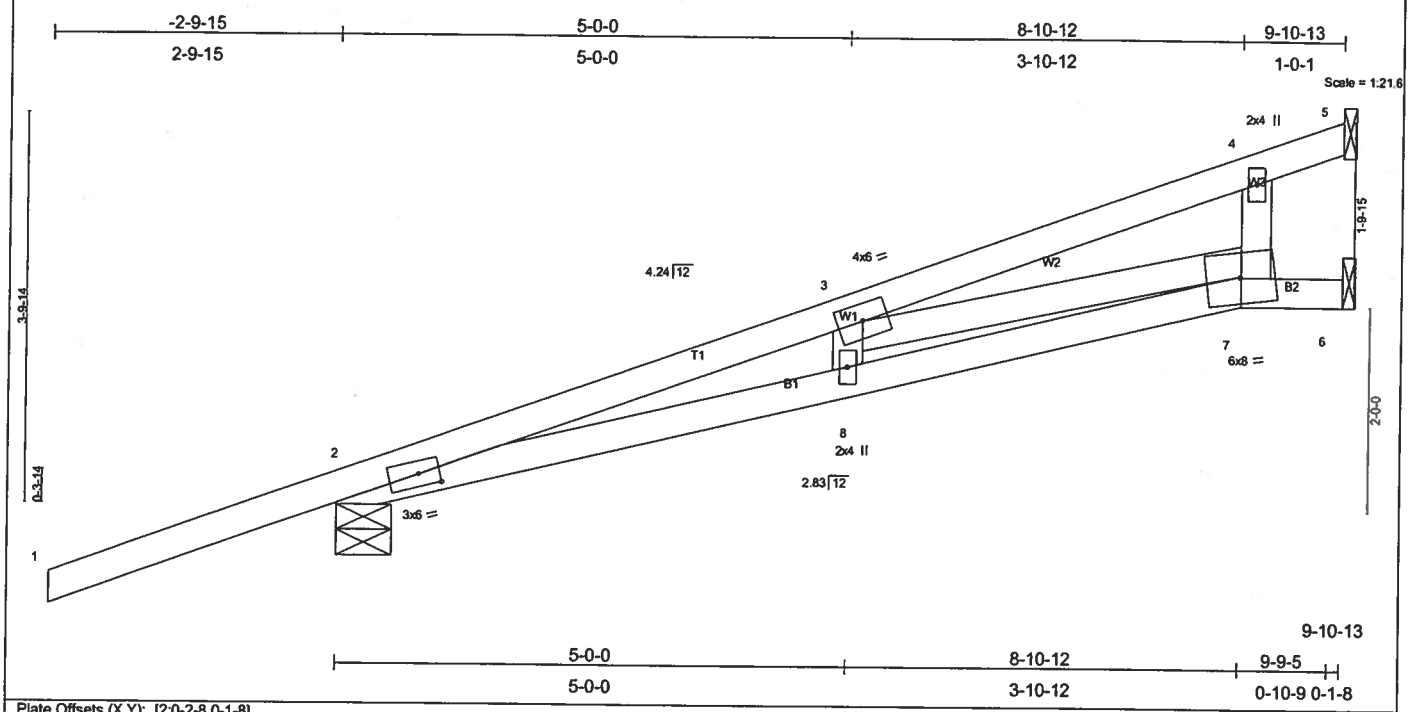

Plate Offsets (X,Y): [2:0-2-8,0-1-8]

LOADING (psf)		SPACING	2-0-0	CSI		DEFL	in	(loc)	l/defl	L/d	PLATES	GRIP
TCLL	20.0	Plates Increase	1.25	TC	0.66	Vert(LL)	-0.18	7-8	>655	240	MT20	244/190
TCDL	7.0	Lumber Increase	1.25	BC	0.85	Vert(TL)	-0.28	7-8	>408	180		
BCLL	10.0	Rep Stress Incr	NO	WB	0.51	Horz(TL)	0.06	6	n/a	n/a		
BCDL	5.0	Code FBC2004/TPI2002		(Matrix)							Weight: 43 lb	

LUMBER
TOP CHORD 2 X 4 SYP No.2
BOT CHORD 2 X 4 SYP No.2
WEBS 2 X 4 SYP No.3

BRACING
TOP CHORD Structural wood sheathing directly applied or 4-6-11 oc purlins.
BOT CHORD Rigid ceiling directly applied or 7-5-6 oc bracing.

REACTIONS (lb/size) 5=351/Mechanical, 2=537/0-6-7, 6=290/Mechanical
Max Horz 2=269(load case 2)
Max Uplift5=-133(load case 2), 2=-327(load case 4), 6=-161(load case 2)

FORCES (lb) - Maximum Compression/Maximum Tension
TOP CHORD 1-2=0/49, 2-3=-1737/468, 3-4=-119/14, 4-5=-50/114
BOT CHORD 2-8=-624/1643, 7-8=-630/1646, 6-7=0/0
WEBS 3-8=0/179, 3-7=-1585/630, 4-7=0/119

JOINT STRESS INDEX
2 = 0.66, 3 = 0.46, 4 = 0.08, 7 = 0.79 and 8 = 0.13

NOTES
1) Wind: ASCE 7-02; 110mph (3-second gust); h=20ft; TCDL=4.2psf; BCDL=3.0psf; Category II; Exp B; enclosed; MWFRS gable end zone; Lumber DOL=1.60 plate grip DOL=1.60.
2) Refer to girder(s) for truss to truss connections.
3) All bearings are assumed to be SYP No.2 crushing capacity of 565.00 psi
4) Bearing at joint(s) 2 considers parallel to grain value using ANSI/TPI 1 angle to grain formula. Building designer should verify capacity of bearing surface.
5) Provide mechanical connection (by others) of truss to bearing plate capable of withstanding 133 lb uplift at joint 5, 327 lb uplift at joint 2 and 161 lb uplift at joint 6.
6) In the LOAD CASE(S) section, loads applied to the face of the truss are noted as front (F) or back (B).

LOAD CASE(S) Standard
1) Regular: Lumber Increase=1.25, Plate Increase=1.25
Uniform Loads (plf)
Vert: 1-2=-54
Trapezoidal Loads (plf)
Vert: 2=-4(F=25, B=25)-to-5=-134(F=-40, B=-40), 2=0(F=15, B=15)-to-7=-67(F=-18, B=-18), 7=-67(F=-18, B=-18)-to-6=-74(F=-22, B=-22)

AUGUST 31, 2006 TRUSS DESIGN ENGINEER:
THOMAS E. MILLER PE 56877, BYRON K. ANDERSON PE 60987
STRUCTURAL ENGINEERING AND INSPECTIONS, INC. EB 9196
16105 N. FLORIDA AVE. STE B, LUTZ, FL 33549

Dwg.#0831061173

Job	Truss	Truss Type	Qty	Ply	CORNERSTONE-SAMUEL EC
L209085	T01H	HIP	1	1	Job Reference (optional)

Builders FirstSource, Lake City, Fl 32055

6.200 s Jul 13 2005 MiTek Industries, Inc. Thu Aug 31 13:39:46 2006 Page 1

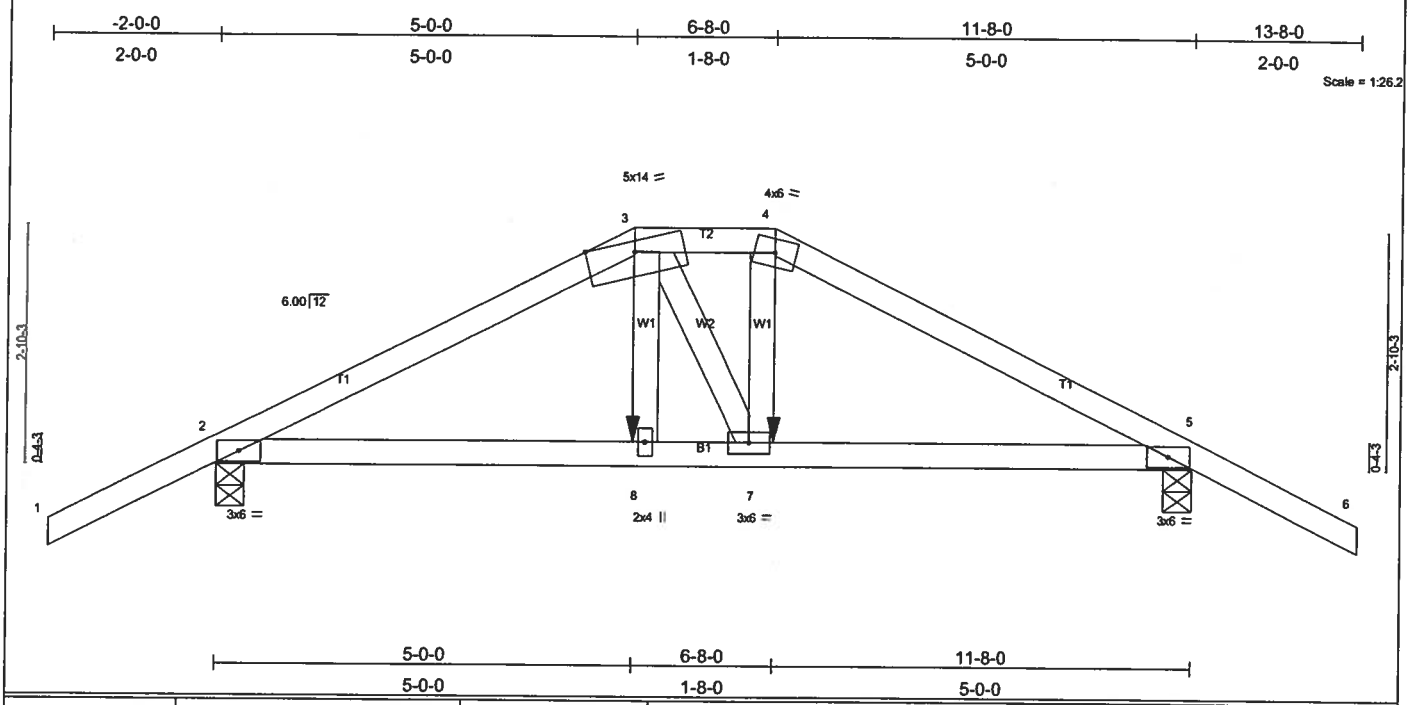

LOADING (psf)		SPACING	2-0-0	CSI		DEFL	in	(loc)	l/defl	L/d	PLATES	GRIP
TCLL	20.0	Plates Increase	1.25	TC	0.27	Vert(LL)	-0.03	2-8	>999	240	MT20	244/190
TCDL	7.0	Lumber Increase	1.25	BC	0.28	Vert(TL)	-0.06	2-8	>999	180		
BCLL	10.0	Rep Stress Incr	NO	WB	0.14	Horz(TL)	0.02	5	n/a	n/a		
BCDL	5.0	Code FBC2004/TPI2002		(Matrix)							Weight: 54 lb	

LUMBER
TOP CHORD 2 X 4 SYP No.2
BOT CHORD 2 X 4 SYP No.2
WEBS 2 X 4 SYP No.3

BRACING
TOP CHORD Structural wood sheathing directly applied or 5-6-1 oc purlins.
BOT CHORD Rigid ceiling directly applied or 10-0-0 oc bracing.

REACTIONS (lb/size) 2=882/0-4-0, 5=882/0-4-0
Max Horz 2=73(load case 4)
Max Uplift2=-432(load case 4), 5=-432(load case 5)

FORCES (lb) - Maximum Compression/Maximum Tension
TOP CHORD 1-2=0/47, 2-3=-1253/468, 3-4=-1077/455, 4-5=-1257/468, 5-6=0/47
BOT CHORD 2-8=-343/1053, 7-8=-347/1073, 5-7=-338/1057
WEBS 3-8=-117/354, 3-7=-69/84, 4-7=-142/423

JOINT STRESS INDEX
2 = 0.57, 3 = 0.37, 4 = 0.37, 5 = 0.57, 7 = 0.28 and 8 = 0.26

NOTES
1) Unbalanced roof live loads have been considered for this design.
2) Wind: ASCE 7-02; 110mph (3-second gust); h=20ft; TCDL=4.2psf; BCDL=3.0psf; Category II; Exp B; enclosed; MWFRS gable end zone; Lumber DOL=1.60 plate grip DOL=1.60.
3) Provide adequate drainage to prevent water ponding.
4) All bearings are assumed to be SYP No.2 crushing capacity of 565.00 psi
5) Provide mechanical connection (by others) of truss to bearing plate capable of withstanding 432 lb uplift at joint 2 and 432 lb uplift at joint 5.
6) Girder carries hip end with 5-0-0 end setback.
7) Hanger(s) or other connection device(s) shall be provided sufficient to support concentrated load(s) 245 lb down and 126 lb up at 6-8-0, and 245 lb down and 126 lb up at 5-0-0 on bottom chord. The design/selection of such connection device(s) is the responsibility of others.
8) In the LOAD CASE(S) section, loads applied to the face of the truss are noted as front (F) or back (B).

LOAD CASE(S) Standard
1) Regular: Lumber Increase=1.25, Plate Increase=1.25
Uniform Loads (plf)
Vert: 1-3=-54, 3-4=-90(F=-36), 4-6=-54, 2-8=-30, 7-8=-50(F=-20), 5-7=-30
Concentrated Loads (lb)
Vert: 8=-245(F) 7=-245(F)

AUGUST 31, 2006 TRUSS DESIGN ENGINEER:
THOMAS E. MILLER PE 56877, BYRON K. ANDERSON PE 60987
STRUCTURAL ENGINEERING AND INSPECTIONS, INC. EB 9196
16105 N. FLORIDA AVE. STE B, LUTZ, FL 33549

Dwg.#0831061174

Job	Truss	Truss Type	Qty	Ply	CORNERSTONE-SAMUEL EC
L209085	T02	COMMON	4	1	Job Reference (optional)

Builders FirstSource, Lake City, Fl 32055

6.200 s Jul 13 2005 MiTek Industries, Inc. Thu Aug 31 13:39:49 2006 Page 1

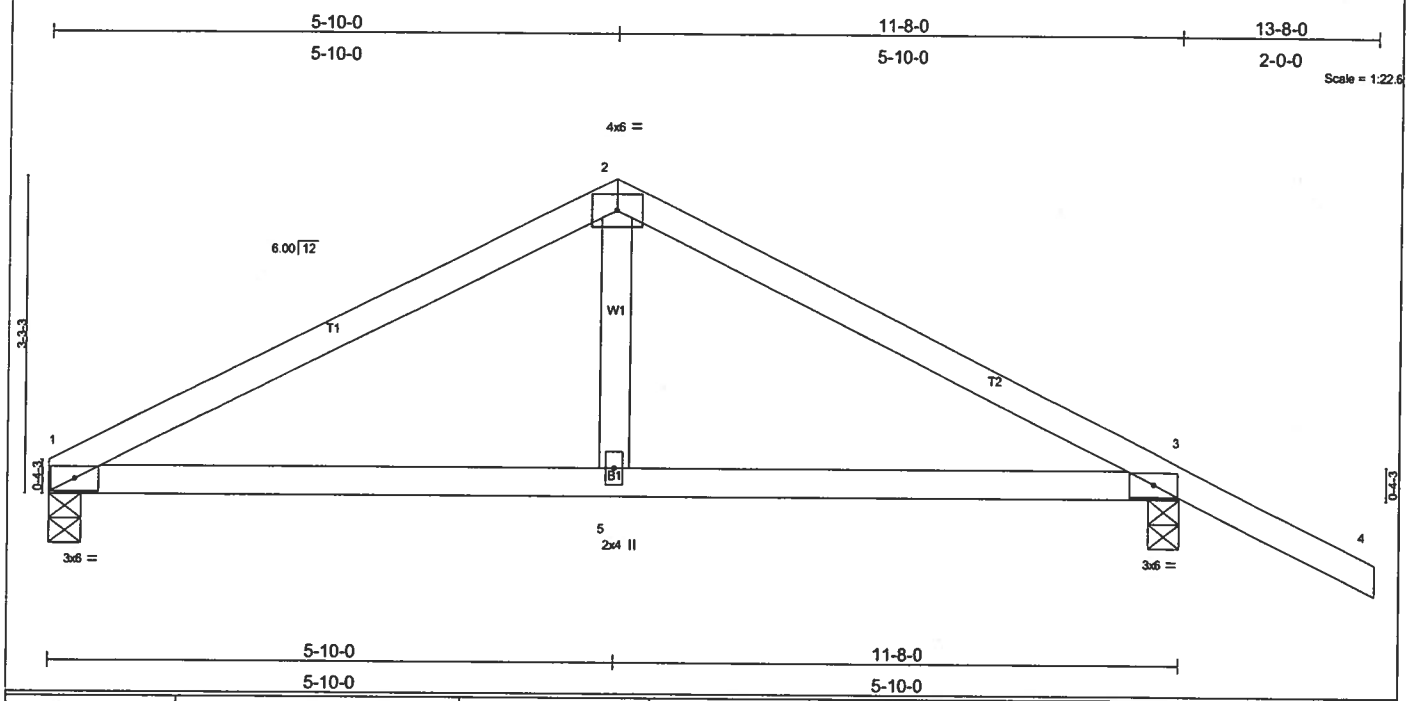

LOADING (psf)		SPACING	2-0-0	CSI		DEFL	in	(loc)	l/defl	L/d	PLATES	GRIP
TCLL	20.0	Plates Increase	1.25	TC	0.30	Vert(LL)	-0.05	1-5	>999	240	MT20	244/190
TCDL	7.0	Lumber Increase	1.25	BC	0.30	Vert(TL)	-0.07	1-5	>999	180		
BCLL	10.0	Rep Stress Incr	YES	WB	0.07	Horz(TL)	0.01	3	n/a	n/a		
BCDL	5.0	Code FBC2004/TPI2002		(Matrix)							Weight: 44 lb	

LUMBER
TOP CHORD 2 X 4 SYP No.2
BOT CHORD 2 X 4 SYP No.2
WEBS 2 X 4 SYP No.3

BRACING
TOP CHORD Structural wood sheathing directly applied or 6-0-0 oc purlins.
BOT CHORD Rigid ceiling directly applied or 10-0-0 oc bracing.

REACTIONS (lb/size) 1=465/0-4-0, 3=604/0-4-0
Max Horz 1=-104(load case 6)
Max Uplift1=-150(load case 5), 3=-290(load case 6)

FORCES (lb) - Maximum Compression/Maximum Tension
TOP CHORD 1-2=-660/294, 2-3=-665/302, 3-4=0/47
BOT CHORD 1-5=-106/533, 3-5=-106/533
WEBS 2-5=0/211

JOINT STRESS INDEX
1 = 0.57, 2 = 0.72, 3 = 0.57 and 5 = 0.15

NOTES
1) Unbalanced roof live loads have been considered for this design.
2) Wind: ASCE 7-02; 110mph (3-second gust); h=20ft; TCDL=4.2psf; BCDL=3.0psf; Category II; Exp B; enclosed; MWFRS gable end zone and C-C Exterior(2) zone; Lumber DOL=1.60 plate grip DOL=1.60. This truss is designed for C-C for members and forces, and for MWFRS for reactions specified.
3) All bearings are assumed to be SYP No.2 crushing capacity of 565.00 psi
4) Provide mechanical connection (by others) of truss to bearing plate capable of withstanding 150 lb uplift at joint 1 and 290 lb uplift at joint 3.

LOAD CASE(S) Standard

AUGUST 31, 2006 TRUSS DESIGN ENGINEER:
THOMAS E. MILLER PE 56877, BYRON K. ANDERSON PE 60987
STRUCTURAL ENGINEERING AND INSPECTIONS, INC. EB 9196
16105 N. FLORIDA AVE. STE B, LUTZ, FL 33549

Dwg.#0831061175

Job	Truss	Truss Type	Qty	Ply	CORNERSTONE-SAMUEL EC
L209085	T03H	HIP	1	1	Job Reference (optional)

Builders FirstSource, Lake City, Fl 32055

6.200 s Jul 13 2005 MiTek Industries, Inc. Thu Aug 31 13:39:54 2006 Page 1

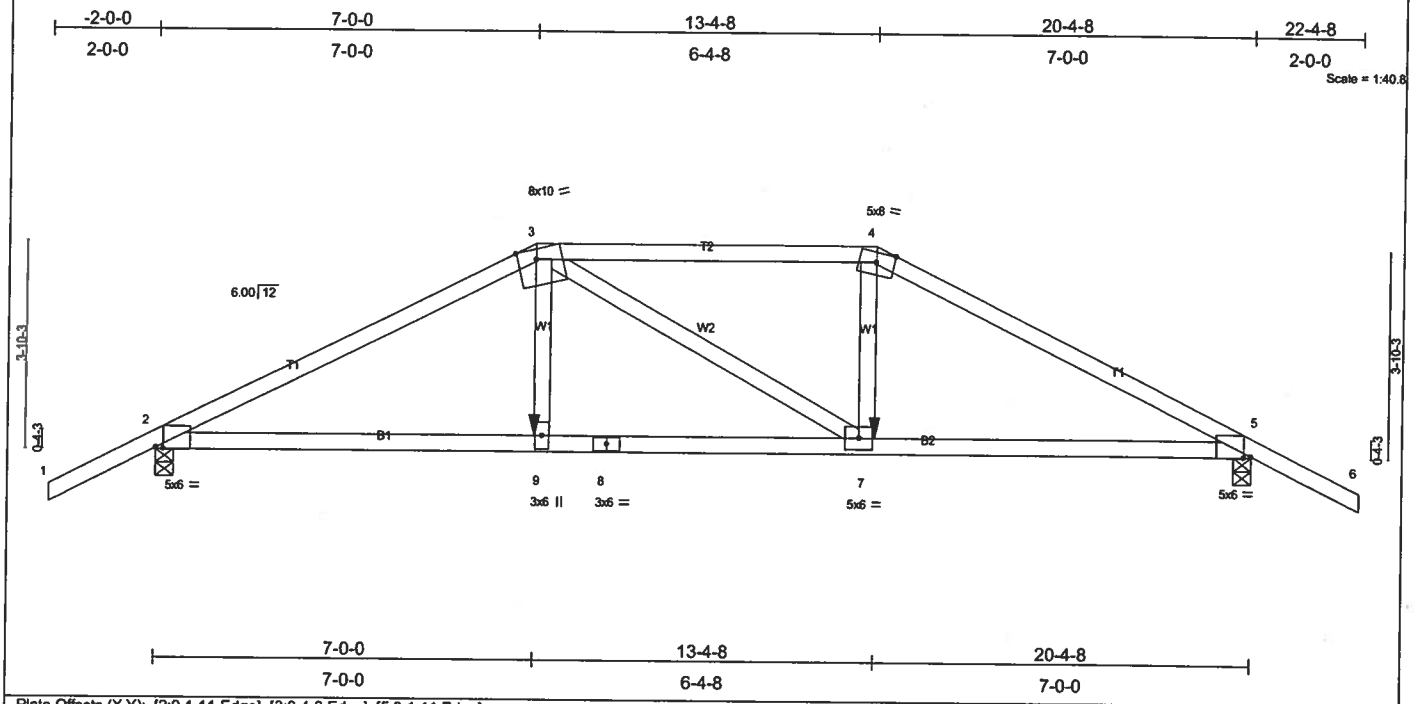

Plate Offsets (X,Y): [2:0-1-11,Edge], [3:0-4-3,Edge], [5:0-1-11,Edge]

LOADING (psf)		SPACING	2-0-0	CSI		DEFL	in	(loc)	l/defl	L/d	PLATES	GRIP
TCLL	20.0	Plates Increase	1.25	TC	0.79	Vert(LL)	-0.19	7-9	>999	240	MT20	244/190
TCDL	7.0	Lumber Increase	1.25	BC	0.76	Vert(TL)	-0.31	7-9	>784	180		
BCLL	10.0	Rep Stress Incr	NO	WB	0.29	Horz(TL)	0.09	5	n/a	n/a		
BCDL	5.0	Code FBC2004/TPI2002		(Matrix)							Weight: 90 lb	

LUMBER
TOP CHORD 2 X 4 SYP No.2
BOT CHORD 2 X 4 SYP No.2
WEBS 2 X 4 SYP No.3

BRACING
TOP CHORD Structural wood sheathing directly applied or 2-8-5 oc purlins.
BOT CHORD Rigid ceiling directly applied or 5-11-6 oc bracing.

REACTIONS (lb/size) 2=1805/0-4-0, 5=1805/0-4-0
Max Horz 2=87(load case 4)
Max Uplift2=-819(load case 4), 5=-819(load case 5)

FORCES (lb) - Maximum Compression/Maximum Tension
TOP CHORD 1-2=0/47, 2-3=-3217/1299, 3-4=-2830/1235, 4-5=-3218/1299, 5-6=0/47
BOT CHORD 2-9=-1104/2793, 8-9=-1113/2829, 7-8=-1113/2829, 5-7=-1063/2795
WEBS 3-9=-216/861, 3-7=-123/126, 4-7=-236/910

JOINT STRESS INDEX
2 = 0.81, 3 = 0.92, 4 = 0.89, 5 = 0.81, 7 = 0.32, 8 = 1.00 and 9 = 0.28

NOTES
1) Unbalanced roof live loads have been considered for this design.
2) Wind: ASCE 7-02; 110mph (3-second gust); h=20ft; TCDL=4.2psf; BCDL=3.0psf; Category II; Exp B; enclosed; MWFRS gable end zone; Lumber DOL=1.60 plate grip DOL=1.60.
3) Provide adequate drainage to prevent water ponding.
4) All bearings are assumed to be SYP No.2 crushing capacity of 565.00 psi
5) Provide mechanical connection (by others) of truss to bearing plate capable of withstanding 819 lb uplift at joint 2 and 819 lb uplift at joint 5.
6) Girder carries hip end with 7-0-0 end setback.
7) Hanger(s) or other connection device(s) shall be provided sufficient to support concentrated load(s) 539 lb down and 277 lb up at 13-4-8, and 539 lb down and 277 lb up at 7-0-0 on bottom chord. The design/selection of such connection device(s) is the responsibility of others.
8) In the LOAD CASE(S) section, loads applied to the face of the truss are noted as front (F) or back (B).

LOAD CASE(S) Standard
1) Regular: Lumber Increase=1.25, Plate Increase=1.25
Uniform Loads (plf)
Vert: 1-3=-54, 3-4=-117(F=-63), 4-6=-54, 2-9=-30, 7-9=-65(F=-35), 5-7=-30
Concentrated Loads (lb)
Vert: 9=-539(F) 7=-539(F)

AUGUST 31, 2006 TRUSS DESIGN ENGINEER:
THOMAS E. MILLER PE 56877, BYRON K. ANDERSON PE 60987
STRUCTURAL ENGINEERING AND INSPECTIONS, INC. EB 9196
16105 N. FLORIDA AVE. STE B, LUTZ, FL 33549

Dwg.#0831061176

Job	Truss	Truss Type	Qty	Ply	CORNERSTONE-SAMUEL EC
L209085	T04H	HIP	1	1	Job Reference (optional)

Builders FirstSource, Lake City, Fl 32055

6.200 s Jul 13 2005 MiTek Industries, Inc. Thu Aug 31 13:39:57 2006 Page 1

-2-0-0	4-9-4	9-0-0	11-4-8	15-7-4	20-4-8
2-0-0	4-9-4	4-2-12	2-4-8	4-2-12	4-9-4

Scale = 1:38.1

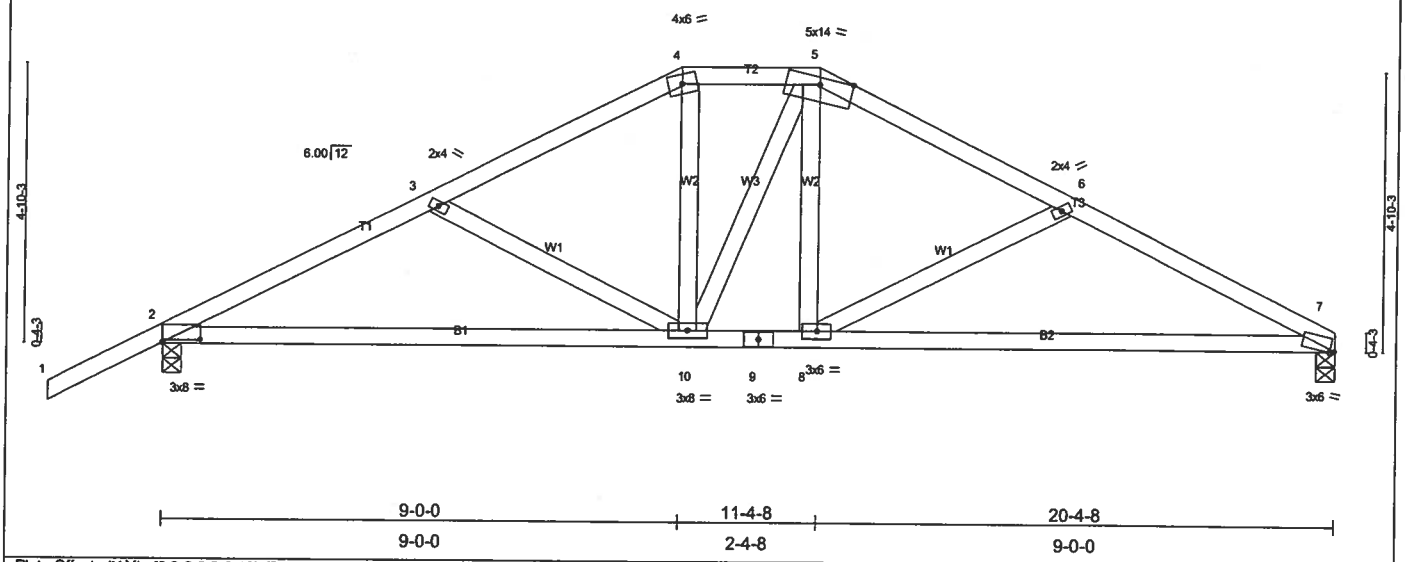

9-0-0	11-4-8	20-4-8
9-0-0	2-4-8	9-0-0

Plate Offsets (X,Y): [2:0-8-0,0-0-10], [7:0-1-1,0-0-7]

LOADING (psf)		SPACING	2-0-0	CSI		DEFL	in	(loc)	l/defl	L/d	PLATES	GRIP
TCLL	20.0	Plates Increase	1.25	TC	0.30	Vert(LL)	-0.18	7-8	>999	240	MT20	244/190
TCDL	7.0	Lumber Increase	1.25	BC	0.50	Vert(TL)	-0.30	7-8	>795	180		
BCLL	10.0	Rep Stress Incr	YES	WB	0.14	Horz(TL)	0.04	7	n/a	n/a		
BCDL	5.0	Code FBC2004/TPI2002		(Matrix)							Weight: 101 lb	

LUMBER
TOP CHORD 2 X 4 SYP No.2
BOT CHORD 2 X 4 SYP No.2
WEBS 2 X 4 SYP No.3

BRACING
TOP CHORD Structural wood sheathing directly applied or 4-10-7 oc purlins.
BOT CHORD Rigid ceiling directly applied or 8-9-11 oc bracing.

REACTIONS (lb/size) 7=835/0-4-0, 2=965/0-4-0
Max Horz 2=126(load case 5)
Max Uplift7=-264(load case 6), 2=-396(load case 5)

FORCES (lb) - Maximum Compression/Maximum Tension
TOP CHORD 1-2=0/47, 2-3=-1369/594, 3-4=-1108/482, 4-5=-948/482, 5-6=-1116/496, 6-7=-1396/639
BOT CHORD 2-10=-446/1183, 9-10=-260/952, 8-9=-260/952, 7-8=-501/1217
WEBS 3-10=-279/223, 4-10=-74/307, 5-10=-112/101, 5-8=-114/324, 6-8=-312/274

JOINT STRESS INDEX
2 = 0.79, 3 = 0.34, 4 = 0.37, 5 = 0.28, 6 = 0.34, 7 = 0.87, 8 = 0.35, 9 = 0.65 and 10 = 0.64

NOTES
1) Unbalanced roof live loads have been considered for this design.
2) Wind: ASCE 7-02; 110mph (3-second gust); h=20ft; TCDL=4.2psf; BCDL=3.0psf; Category II; Exp B; enclosed; MWFRS gable end zone and C-C Exterior(2) zone; Lumber DOL=1.60 plate grip DOL=1.60. This truss is designed for C-C for members and forces, and for MWFRS for reactions specified.
3) Provide adequate drainage to prevent water ponding.
4) All bearings are assumed to be SYP No.2 crushing capacity of 565.00 psi
5) Provide mechanical connection (by others) of truss to bearing plate capable of withstanding 264 lb uplift at joint 7 and 396 lb uplift at joint 2.

LOAD CASE(S) Standard

AUGUST 31, 2006 TRUSS DESIGN ENGINEER:
THOMAS E. MILLER PE 56877, BYRON K. ANDERSON PE 60987
STRUCTURAL ENGINEERING AND INSPECTIONS, INC. EB 9196
16105 N. FLORIDA AVE. STE B, LUTZ, FL 33549

Dwg.#0831061177

Job	Truss	Truss Type	Qty	Ply	CORNERSTONE-SAMUEL EC
L209085	T05	COMMON	4	1	Job Reference (optional)

Builders FirstSource, Lake City, Fl 32055

6.200 s Jul 13 2005 MiTek Industries, Inc. Thu Aug 31 13:40:00 2006 Page 1

-2-0-0	5-4-6	10-2-4	15-0-2	20-4-8
2-0-0	5-4-6	4-9-14	4-9-14	5-4-6

Scale = 1:37.5

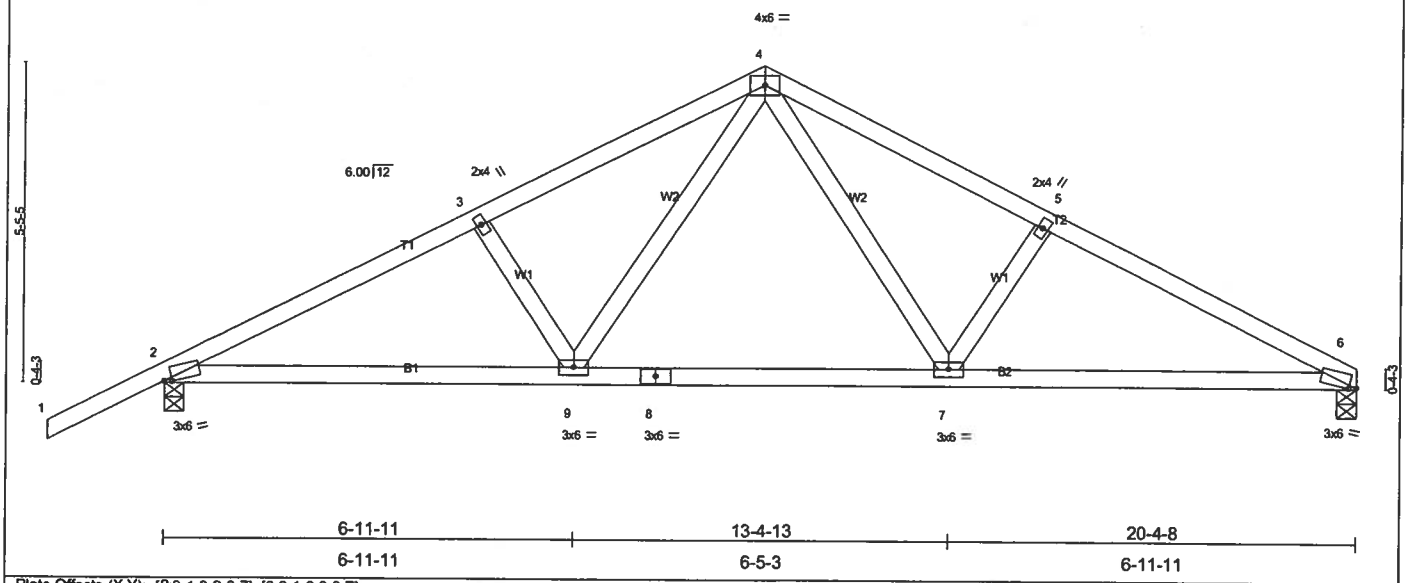

6-11-11	13-4-13	20-4-8
6-11-11	6-5-3	6-11-11

Plate Offsets (X,Y): [2:0-1-9,0-0-7], [6:0-1-9,0-0-7]

LOADING (psf)		SPACING	2-0-0	CSI		DEFL	in	(loc)	l/defl	L/d	PLATES	GRIP
TCLL	20.0	Plates Increase	1.25	TC	0.34	Vert(LL)	-0.16	7-9	>999	240	MT20	244/190
TCDL	7.0	Lumber Increase	1.25	BC	0.76	Vert(TL)	-0.26	7-9	>911	180		
BCLL	10.0	Rep Stress Incr	NO	WB	0.23	Horz(TL)	0.05	6	n/a	n/a		
BCDL	5.0	Code FBC2004/TPI2002		(Matrix)							Weight: 94 lb	

LUMBER
TOP CHORD 2 X 4 SYP No.2
BOT CHORD 2 X 4 SYP No.2
WEBS 2 X 4 SYP No.3

BRACING
TOP CHORD Structural wood sheathing directly applied or 4-6-5 oc purlins.
BOT CHORD Rigid ceiling directly applied or 7-10-1 oc bracing.

REACTIONS (lb/size) 6=996/0-4-0, 2=1126/0-4-0
Max Horz 2=134(load case 5)
Max Uplift6=-332(load case 6), 2=-464(load case 5)

FORCES (lb) - Maximum Compression/Maximum Tension
TOP CHORD 1-2=0/47, 2-3=-1778/742, 3-4=-1631/742, 4-5=-1655/782, 5-6=-1791/785
BOT CHORD 2-9=-572/1519, 8-9=-332/1057, 7-8=-332/1057, 6-7=-620/1548
WEBS 3-9=-225/212, 4-9=-240/677, 4-7=-302/713, 5-7=-243/240

JOINT STRESS INDEX
2 = 0.79, 3 = 0.34, 4 = 0.57, 5 = 0.34, 6 = 0.79, 7 = 0.54, 8 = 0.50 and 9 = 0.54

NOTES
1) Unbalanced roof live loads have been considered for this design.
2) Wind: ASCE 7-02; 110mph (3-second gust); h=20ft; TCDL=4.2psf; BCDL=3.0psf; Category II; Exp B; enclosed; MWFRS gable end zone and C-C Exterior(2) zone; Lumber DOL=1.60 plate grip DOL=1.60. This truss is designed for C-C for members and forces, and for MWFRS for reactions specified.
3) All bearings are assumed to be SYP No.2 crushing capacity of 565.00 psi
4) Provide mechanical connection (by others) of truss to bearing plate capable of withstanding 332 lb uplift at joint 6 and 464 lb uplift at joint 2.
5) In the LOAD CASE(S) section, loads applied to the face of the truss are noted as front (F) or back (B).

LOAD CASE(S) Standard
1) Regular: Lumber Increase=1.25, Plate Increase=1.25
Uniform Loads (plf)
Vert: 1-4=-54, 4-6=-54, 2-9=-30, 7-9=-80(F=-50), 6-7=-30

AUGUST 31, 2006 TRUSS DESIGN ENGINEER:
THOMAS E. MILLER PE 56877, BYRON K. ANDERSON PE 60987
STRUCTURAL ENGINEERING AND INSPECTIONS, INC. EB 9196
16105 N. FLORIDA AVE. STE B, LUTZ, FL 33549

Dwg.#0831061178

Job	Truss	Truss Type	Qty	Ply	CORNERSTONE-SAMUEL EC
L209085	T06	MONO HIP	1	1	Job Reference (optional)

Builders FirstSource, Lake City, Fl 32055

6.200 s Jul 13 2005 MiTek Industries, Inc. Thu Aug 31 13:40:03 2006 Page 1

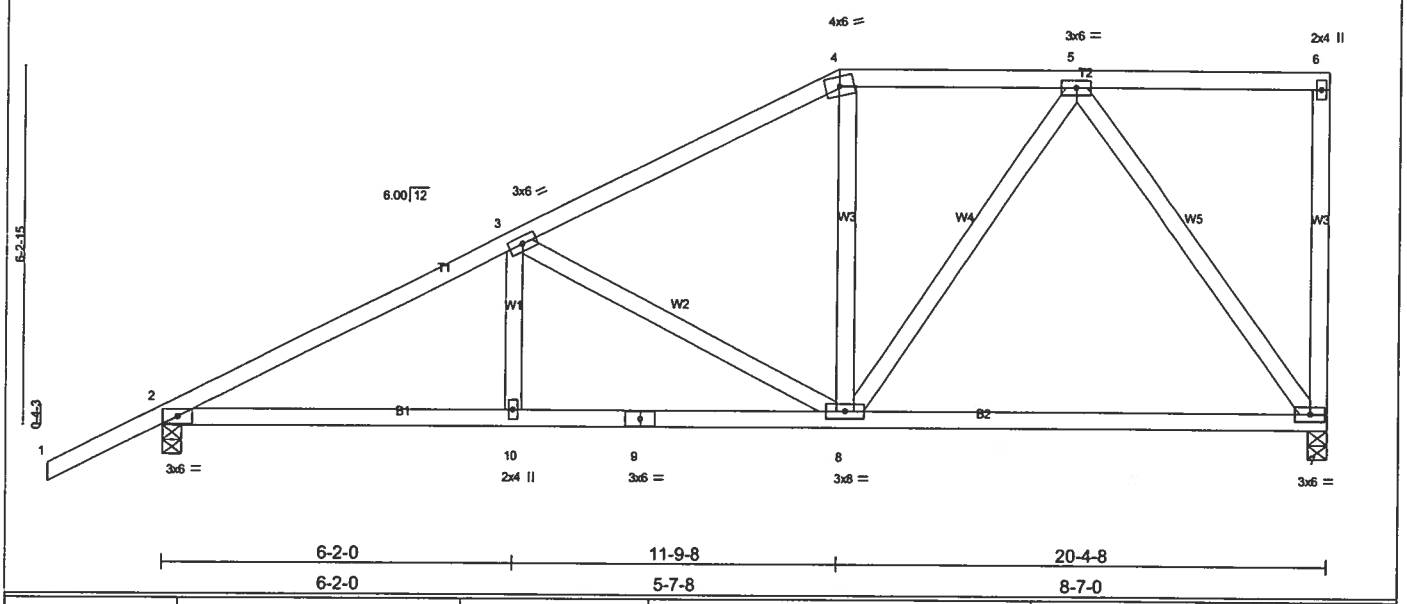

LOADING (psf)		SPACING	2-0-0	CSI		DEFL	in	(loc)	l/defl	L/d	PLATES	GRIP
TCLL	20.0	Plates Increase	1.25	TC	0.45	Vert(LL)	-0.11	7-8	>999	240	MT20	244/190
TCDL	7.0	Lumber Increase	1.25	BC	0.48	Vert(TL)	-0.19	7-8	>999	180		
BCLL	10.0	Rep Stress Incr	YES	WB	0.70	Horz(TL)	0.03	7	n/a	n/a		
BCDL	5.0	Code FBC2004/TPI2002		(Matrix)							Weight: 117 lb	

LUMBER
TOP CHORD 2 X 4 SYP No.2
BOT CHORD 2 X 4 SYP No.2
WEBS 2 X 4 SYP No.3

BRACING
TOP CHORD Structural wood sheathing directly applied or 5-1-4 oc purlins, except end verticals.
BOT CHORD Rigid ceiling directly applied or 8-0-13 oc bracing.

REACTIONS (lb/size) 7=836/0-4-0, 2=966/0-4-0
Max Horz 2=336(load case 5)
Max Uplift7=-281(load case 4), 2=-382(load case 5)

FORCES (lb) - Maximum Compression/Maximum Tension
TOP CHORD 1-2=0/47, 2-3=-1401/452, 3-4=-877/322, 4-5=-722/345, 5-6=-32/1, 6-7=-116/76
BOT CHORD 2-10=-611/1181, 9-10=-611/1181, 8-9=-611/1181, 7-8=-234/465
WEBS 3-10=0/169, 3-8=-525/300, 4-8=0/96, 5-8=-199/461, 5-7=-739/398

JOINT STRESS INDEX
2 = 0.63, 3 = 0.41, 4 = 0.54, 5 = 0.42, 6 = 0.74, 7 = 0.58, 8 = 0.58, 9 = 0.42 and 10 = 0.34

NOTES
1) Wind: ASCE 7-02; 110mph (3-second gust); h=20ft; TCDL=4.2psf; BCDL=3.0psf; Category II; Exp B; enclosed; MWFRS gable end zone and C-C Exterior(2) zone; Lumber DOL=1.60 plate grip DOL=1.60. This truss is designed for C-C for members and forces, and for MWFRS for reactions specified.
2) Provide adequate drainage to prevent water ponding.
3) All bearings are assumed to be SYP No.2 crushing capacity of 565.00 psi
4) Provide mechanical connection (by others) of truss to bearing plate capable of withstanding 281 lb uplift at joint 7 and 382 lb uplift at joint 2.

LOAD CASE(S) Standard

AUGUST 31, 2006 TRUSS DESIGN ENGINEER:
THOMAS E. MILLER PE 56877, BYRON K. ANDERSON PE 60987
STRUCTURAL ENGINEERING AND INSPECTIONS, INC. EB 9196
16105 N. FLORIDA AVE. STE B, LUTZ, FL 33549

Dwg.#0831061179

Job	Truss	Truss Type	Qty	Ply	CORNERSTONE-SAMUEL EC
L209085	T07	MONO HIP	1	1	Job Reference (optional)

Builders FirstSource, Lake City, Fl 32055

6.200 s Jul 13 2005 MiTek Industries, Inc. Thu Aug 31 13:40:06 2006 Page 1

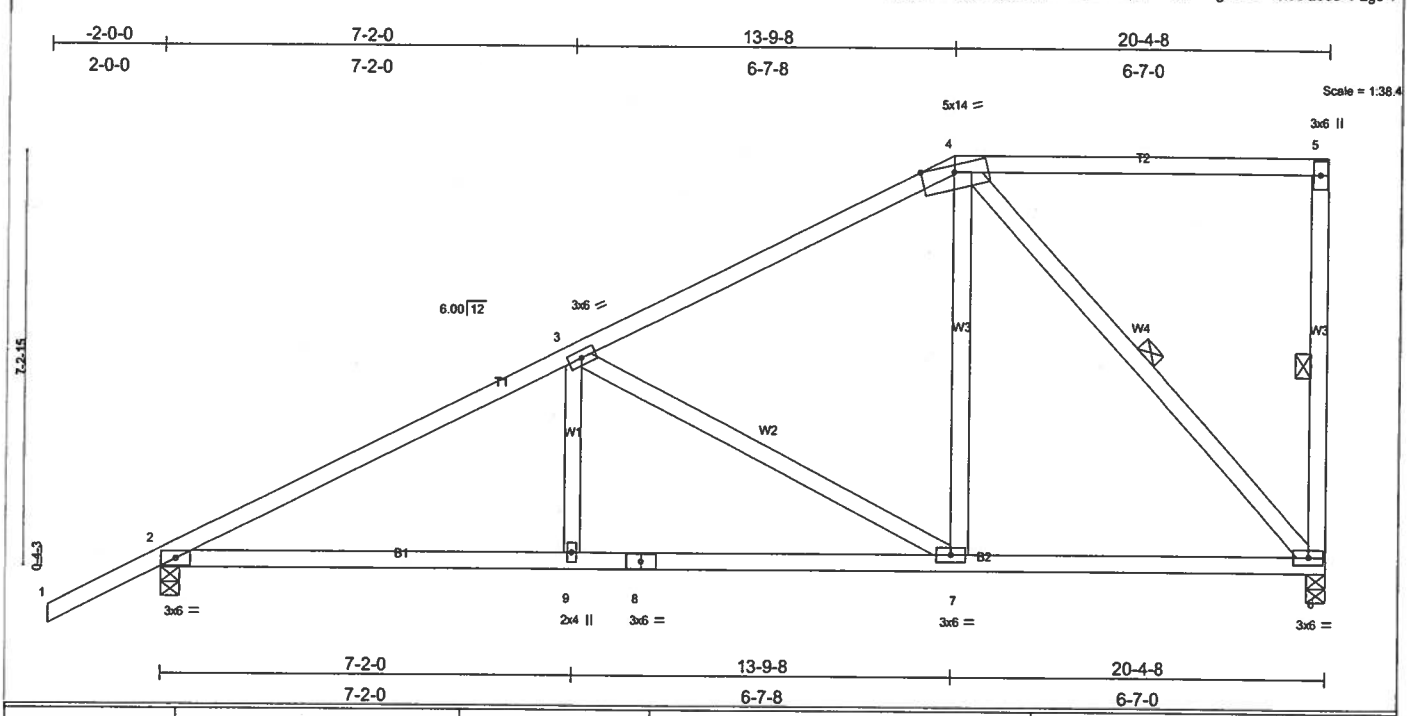

LOADING (psf)		SPACING	2-0-0	CSI		DEFL	in	(loc)	l/defl	L/d	PLATES	GRIP
TCLL	20.0	Plates Increase	1.25	TC	0.38	Vert(LL)	-0.10	2-9	>999	240	MT20	244/190
TCDL	7.0	Lumber Increase	1.25	BC	0.38	Vert(TL)	-0.16	2-9	>999	180		
BCLL	10.0	Rep Stress Incr	YES	WB	0.67	Horz(TL)	0.03	6	n/a	n/a		
BCDL	5.0	Code FBC2004/TPI2002		(Matrix)							Weight: 116 lb	

LUMBER
TOP CHORD 2 X 4 SYP No.2
BOT CHORD 2 X 4 SYP No.2
WEBS 2 X 4 SYP No.3

BRACING
TOP CHORD Structural wood sheathing directly applied or 5-0-4 oc purlins, except end verticals.
BOT CHORD Rigid ceiling directly applied or 8-1-3 oc bracing.
WEBS 1 Row at midpt 5-6, 4-6

REACTIONS (lb/size) 6=836/0-4-0, 2=966/0-4-0
Max Horz 2=383(load case 5)
Max Uplift6=-290(load case 5), 2=-378(load case 5)

FORCES (lb) - Maximum Compression/Maximum Tension
TOP CHORD 1-2=0/47, 2-3=-1360/407, 3-4=-708/243, 4-5=-26/12, 5-6=-158/117
BOT CHORD 2-9=-610/1136, 8-9=-610/1136, 7-8=-610/1136, 6-7=-292/571
WEBS 3-9=0/230, 3-7=-653/363, 4-7=-126/503, 4-6=-802/417

JOINT STRESS INDEX
2 = 0.62, 3 = 0.41, 4 = 0.98, 5 = 0.30, 6 = 0.39, 7 = 0.35, 8 = 0.44 and 9 = 0.34

NOTES
1) Wind: ASCE 7-02; 110mph (3-second gust); h=20ft; TCDL=4.2psf; BCDL=3.0psf; Category II; Exp B; enclosed; MWFRS gable end zone and C-C Exterior(2) zone; Lumber DOL=1.60 plate grip DOL=1.60. This truss is designed for C-C for members and forces, and for MWFRS for reactions specified.
2) Provide adequate drainage to prevent water ponding.
3) All bearings are assumed to be SYP No.2 crushing capacity of 565.00 psi
4) Provide mechanical connection (by others) of truss to bearing plate capable of withstanding 290 lb uplift at joint 6 and 378 lb uplift at joint 2.

LOAD CASE(S) Standard

AUGUST 31, 2006 TRUSS DESIGN ENGINEER:
THOMAS E. MILLER PE 56877, BYRON K. ANDERSON PE 60987
STRUCTURAL ENGINEERING AND INSPECTIONS, INC. EB 9196
16105 N. FLORIDA AVE. STE B, LUTZ, FL 33549

Dwg.#0831061180

Job	Truss	Truss Type	Qty	Ply	CORNERSTONE-SAMUEL EC
L209085	T08	MONO HIP	1	1	Job Reference (optional)

Builders FirstSource, Lake City, Fl 32055

6.200 s Jul 13 2005 MiTek Industries, Inc. Thu Aug 31 13:40:09 2006 Page 1

-2-0-0	7-0-0	12-8-15	18-4-1	24-1-0
2-0-0	7-0-0	5-8-15	5-7-3	5-8-15

Scale = 1:44.7

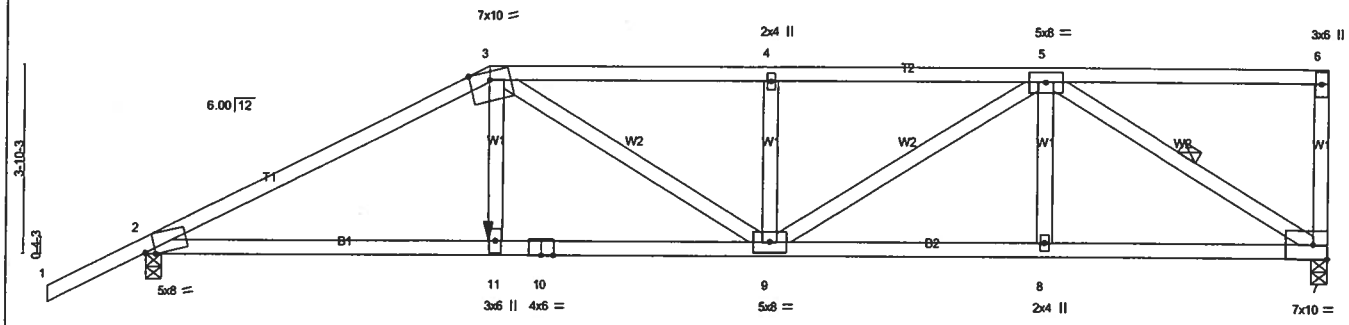

7-0-0	12-8-15	18-4-1	24-1-0
7-0-0	5-8-15	5-7-3	5-8-15

Plate Offsets (X,Y): [2:0-2-7,Edge]

LOADING (psf)		SPACING	2-0-0	CSI		DEFL	in	(loc)	l/defl	L/d	PLATES	GRIP
TCLL	20.0	Plates Increase	1.25	TC	0.87	Vert(LL)	-0.23	9-11	>999	240	MT20	244/190
TCDL	7.0	Lumber Increase	1.25	BC	0.85	Vert(TL)	-0.37	9-11	>762	180		
BCLL	10.0	Rep Stress Incr	NO	WB	0.78	Horz(TL)	0.12	7	n/a	n/a		
BCDL	5.0	Code FBC2004/TPI2002		(Matrix)							Weight: 124 lb	

LUMBER
TOP CHORD 2 X 4 SYP No.2
BOT CHORD 2 X 4 SYP No.2
WEBS 2 X 4 SYP No.3

BRACING
TOP CHORD Structural wood sheathing directly applied or 2-8-13 oc purlins, except end verticals.
BOT CHORD Rigid ceiling directly applied or 5-2-11 oc bracing.
WEBS 1 Row at midpt 5-7

REACTIONS (lb/size) 7=2218/0-4-0, 2=2089/0-4-0
Max Horz 2=227(load case 4)
Max Uplift7=-997(load case 3), 2=-910(load case 4)

FORCES (lb) - Maximum Compression/Maximum Tension
TOP CHORD 1-2=0/47, 2-3=-3815/1600, 3-4=-3903/1752, 4-5=-3903/1753, 5-6=-113/51, 6-7=-315/248
BOT CHORD 2-11=-1466/3321, 10-11=-1475/3356, 9-10=-1475/3356, 8-9=-1264/2817, 7-8=-1264/2817
WEBS 3-11=-220/840, 3-9=-394/643, 4-9=-660/567, 5-9=-579/1286, 5-8=0/358, 5-7=-3203/1437

JOINT STRESS INDEX
2 = 0.87, 3 = 0.84, 4 = 0.34, 5 = 0.83, 6 = 0.67, 7 = 0.56, 8 = 0.34, 9 = 0.59, 10 = 0.93 and 11 = 0.27

NOTES
1) Wind: ASCE 7-02; 110mph (3-second gust); h=20ft; TCDL=4.2psf; BCDL=3.0psf; Category II; Exp B; enclosed; MWFRS gable end zone; Lumber DOL=1.60 plate grip DOL=1.60.
2) Provide adequate drainage to prevent water ponding.
3) All bearings are assumed to be SYP No.2 crushing capacity of 565.00 psi
4) Provide mechanical connection (by others) of truss to bearing plate capable of withstanding 997 lb uplift at joint 7 and 910 lb uplift at joint 2.
5) Girder carries hip end with 0-0-0 right side setback, 7-0-0 left side setback, and 7-0-0 end setback.
6) Hanger(s) or other connection device(s) shall be provided sufficient to support concentrated load(s) 539 lb down and 277 lb up at 7-0-0 on bottom chord. The design/selection of such connection device(s) is the responsibility of others.
7) In the LOAD CASE(S) section, loads applied to the face of the truss are noted as front (F) or back (B).

LOAD CASE(S) Standard
1) Regular: Lumber Increase=1.25, Plate Increase=1.25
Uniform Loads (plf)
Vert: 1-3=-54, 3-6=-117(F=-63), 2-11=-30, 7-11=-65(F=-35)
Concentrated Loads (lb)
Vert: 11=-539(F)

AUGUST 31, 2006 TRUSS DESIGN ENGINEER:
THOMAS E. MILLER PE 56877, BYRON K. ANDERSON PE 60987
STRUCTURAL ENGINEERING AND INSPECTIONS, INC. EB 9196
16105 N. FLORIDA AVE. STE B, LUTZ, FL 33549

Dwg.#0831061181

Job	Truss	Truss Type	Qty	Ply	CORNERSTONE-SAMUEL EC
L209085	T09T	SPECIAL	1	1	Job Reference (optional)

Builders FirstSource, Lake City, Fl 32055

6.200 s Jul 13 2005 MiTek Industries, Inc. Thu Aug 31 13:40:13 2006 Page 1

-2-0-0	2-4-0	4-4-0	9-0-0	12-9-8	14-9-8	19-5-4	24-1-0
2-0-0	2-4-0	2-0-0	4-8-0	3-9-8	2-0-0	4-7-12	4-7-12

Scale = 1:45.4

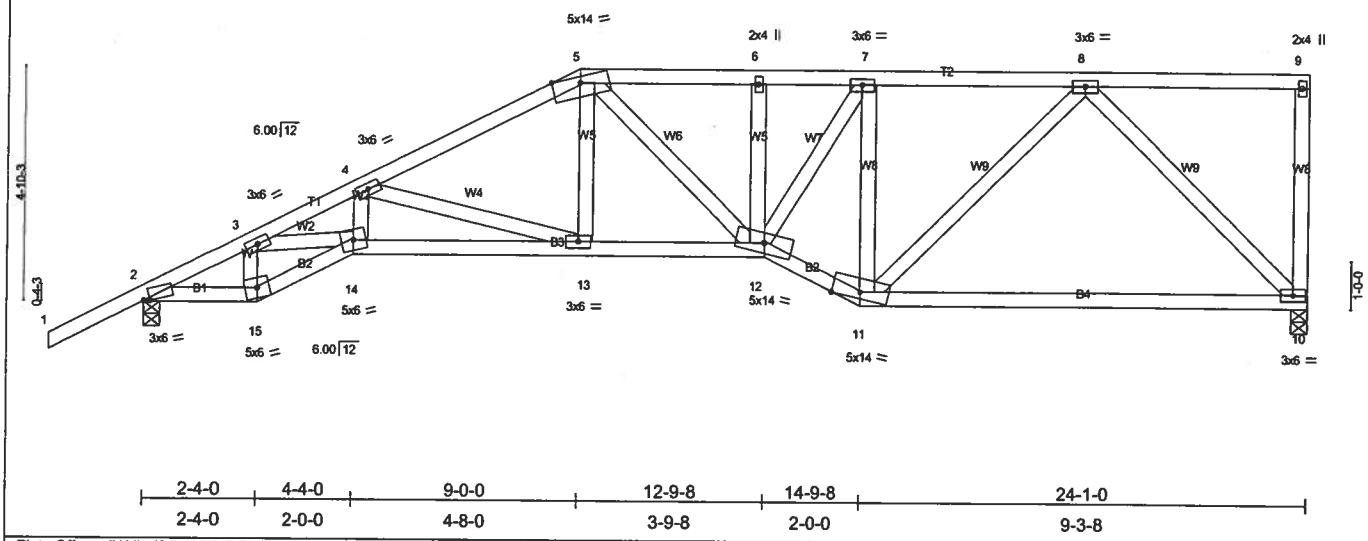

2-4-0	4-4-0	9-0-0	12-9-8	14-9-8	24-1-0
2-4-0	2-0-0	4-8-0	3-9-8	2-0-0	9-3-8

Plate Offsets (X,Y): [2:0-1-9,0-0-7]

LOADING (psf)		SPACING	2-0-0	CSI		DEFL	in	(loc)	l/defl	L/d	PLATES	GRIP
TCLL	20.0	Plates Increase	1.25	TC	0.58	Vert(LL)	-0.17	10-11	>999	240	MT20	244/190
TCDL	7.0	Lumber Increase	1.25	BC	0.61	Vert(TL)	-0.30	10-11	>962	180		
BCLL	10.0	Rep Stress Incr	YES	WB	0.76	Horz(TL)	0.12	10	n/a	n/a		
BCDL	5.0	Code FBC2004/TPI2002		(Matrix)							Weight: 143 lb	

LUMBER
TOP CHORD 2 X 4 SYP No.2
BOT CHORD 2 X 4 SYP No.2
WEBS 2 X 4 SYP No.3

BRACING
TOP CHORD Structural wood sheathing directly applied or 3-6-0 oc purlins, except end verticals.
BOT CHORD Rigid ceiling directly applied or 5-7-7 oc bracing.

REACTIONS (lb/size) 10=993/0-4-0, 2=1121/0-4-0
Max Horz 2=272(load case 5)
Max Uplift10=-358(load case 4), 2=-420(load case 5)

FORCES (lb) - Maximum Compression/Maximum Tension
TOP CHORD 1-2=0/47, 2-3=-1771/545, 3-4=-3079/1260, 4-5=-1800/736, 5-6=-1635/711, 6-7=-1634/711, 7-8=-1284/525, 8-9=-53/0, 9-10=-119/75
BOT CHORD 2-15=-645/1501, 14-15=-668/1588, 13-14=-1255/2659, 12-13=-718/1599, 11-12=-571/1352, 10-11=-357/786
WEBS 3-15=-665/353, 3-14=-681/1326, 4-14=-224/704, 4-13=-1119/562, 5-13=-132/481, 5-12=-123/53, 6-12=-104/100, 7-12=-370/692, 7-11=-780/451, 8-11=-236/697, 8-10=-1042/507

JOINT STRESS INDEX
2 = 0.78, 3 = 0.65, 4 = 0.52, 5 = 0.54, 6 = 0.34, 7 = 0.54, 8 = 0.44, 9 = 0.87, 10 = 0.75, 11 = 0.70, 12 = 0.40, 13 = 0.35, 14 = 0.84 and 15 = 0.41

NOTES
1) Wind: ASCE 7-02; 110mph (3-second gust); h=20ft; TCDL=4.2psf; BCDL=3.0psf; Category II; Exp B; enclosed; MWFRS gable end zone and C-C Exterior(2) zone; Lumber DOL=1.60 plate grip DOL=1.60. This truss is designed for C-C for members and forces, and for MWFRS for reactions specified.
2) Provide adequate drainage to prevent water ponding.
3) All bearings are assumed to be SYP No.2 crushing capacity of 565.00 psi
4) Provide mechanical connection (by others) of truss to bearing plate capable of withstanding 358 lb uplift at joint 10 and 420 lb uplift at joint 2.

LOAD CASE(S) Standard

AUGUST 31, 2006 TRUSS DESIGN ENGINEER:
THOMAS E. MILLER PE 56877, BYRON K. ANDERSON PE 60987
STRUCTURAL ENGINEERING AND INSPECTIONS, INC. EB 9196
16105 N. FLORIDA AVE. STE B, LUTZ, FL 33549

Dwg.#0831061182

Job	Truss	Truss Type	Qty	Ply	CORNERSTONE-SAMUEL EC
L209085	T10T	SPECIAL	1	1	Job Reference (optional)

Builders FirstSource, Lake City, Fl 32055

6.200 s Jul 13 2005 MiTek Industries, Inc. Thu Aug 31 13:40:16 2006 Page 1

-2-0-0	2-4-0	4-4-0	11-0-0	12-9-8	14-9-8	19-5-4	24-1-0
2-0-0	2-4-0	2-0-0	6-8-0	1-9-8	2-0-0	4-7-12	4-7-12

Scale = 1:45.4

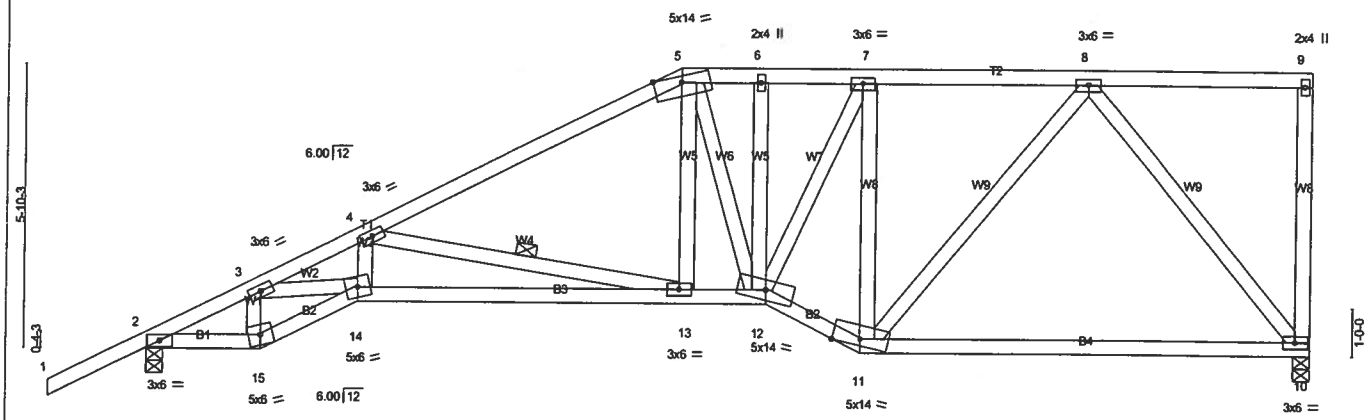

2-4-0	4-4-0	11-0-0	12-9-8	14-9-8	24-1-0
2-4-0	2-0-0	6-8-0	1-9-8	2-0-0	9-3-8

LOADING (psf)		SPACING	2-0-0	CSI		DEFL	in	(loc)	l/defl	L/d	PLATES	GRIP
TCLL	20.0	Plates Increase	1.25	TC	0.54	Vert(LL)	-0.20	13-14	>999	240	MT20	244/190
TCDL	7.0	Lumber Increase	1.25	BC	0.67	Vert(TL)	-0.32	13-14	>884	180		
BCLL	10.0	Rep Stress Incr	YES	WB	0.87	Horz(TL)	0.13	10	n/a	n/a		
BCDL	5.0	Code FBC2004/TPI2002		(Matrix)							Weight: 156 lb	

LUMBER
TOP CHORD 2 X 4 SYP No.2
BOT CHORD 2 X 4 SYP No.2
WEBS 2 X 4 SYP No.3

BRACING
TOP CHORD Structural wood sheathing directly applied or 3-5-4 oc purlins, except end verticals.
BOT CHORD Rigid ceiling directly applied or 5-4-2 oc bracing.
WEBS 1 Row at midpt 4-13

REACTIONS (lb/size) 10=993/0-4-0, 2=1121/0-4-0
Max Horz 2=318(load case 5)
Max Uplift10=-349(load case 4), 2=-426(load case 5)

FORCES (lb) - Maximum Compression/Maximum Tension
TOP CHORD 1-2=0/47, 2-3=-1748/523, 3-4=-3170/1314, 4-5=-1573/628, 5-6=-1260/584, 6-7=-1259/583, 7-8=-1056/454, 8-9=-41/0, 9-10=-118/74
BOT CHORD 2-15=-671/1477, 14-15=-691/1569, 13-14=-1373/2751, 12-13=-641/1361, 11-12=-499/1101, 10-11=-304/644
WEBS 3-15=-681/347, 3-14=-773/1449, 4-14=-213/745, 4-13=-1433/749, 5-13=-117/562, 5-12=-301/178, 6-12=-104/95, 7-12=-313/490, 7-11=-660/440, 8-11=-234/641, 8-10=-959/482

JOINT STRESS INDEX
2 = 0.78, 3 = 0.71, 4 = 0.55, 5 = 0.99, 6 = 0.34, 7 = 0.47, 8 = 0.45, 9 = 0.83, 10 = 0.70, 11 = 0.65, 12 = 0.46, 13 = 0.40, 14 = 0.87 and 15 = 0.40

NOTES
1) Wind: ASCE 7-02; 110mph (3-second gust); h=20ft; TCDL=4.2psf; BCDL=3.0psf; Category II; Exp B; enclosed; MWFRS gable end zone and C-C Exterior(2) zone; Lumber DOL=1.60 plate grip DOL=1.60. This truss is designed for C-C for members and forces, and for MWFRS for reactions specified.
2) Provide adequate drainage to prevent water ponding.
3) All bearings are assumed to be SYP No.2 crushing capacity of 565.00 psi
4) Provide mechanical connection (by others) of truss to bearing plate capable of withstanding 349 lb uplift at joint 10 and 426 lb uplift at joint 2.

LOAD CASE(S) Standard

AUGUST 31, 2006 TRUSS DESIGN ENGINEER:
THOMAS E. MILLER PE 56877, BYRON K. ANDERSON PE 60987
STRUCTURAL ENGINEERING AND INSPECTIONS, INC. EB 9196
16105 N. FLORIDA AVE. STE B, LUTZ, FL 33549

Dwg.#0831061183

Job	Truss	Truss Type	Qty	Ply	CORNERSTONE-SAMUEL EC
L209085	T11T	SPECIAL	1	1	Job Reference (optional)

Builders FirstSource, Lake City, Fl 32055

6.200 s Jul 13 2005 MiTek Industries, Inc. Thu Aug 31 13:40:19 2006 Page 1

-2-0-0	2-4-0	4-4-0	8-8-0	13-0-0	14-9-8	19-5-4	24-1-0
2-0-0	2-4-0	2-0-0	4-4-0	4-4-0	1-9-8	4-7-12	4-7-12

Scale = 1:45.4

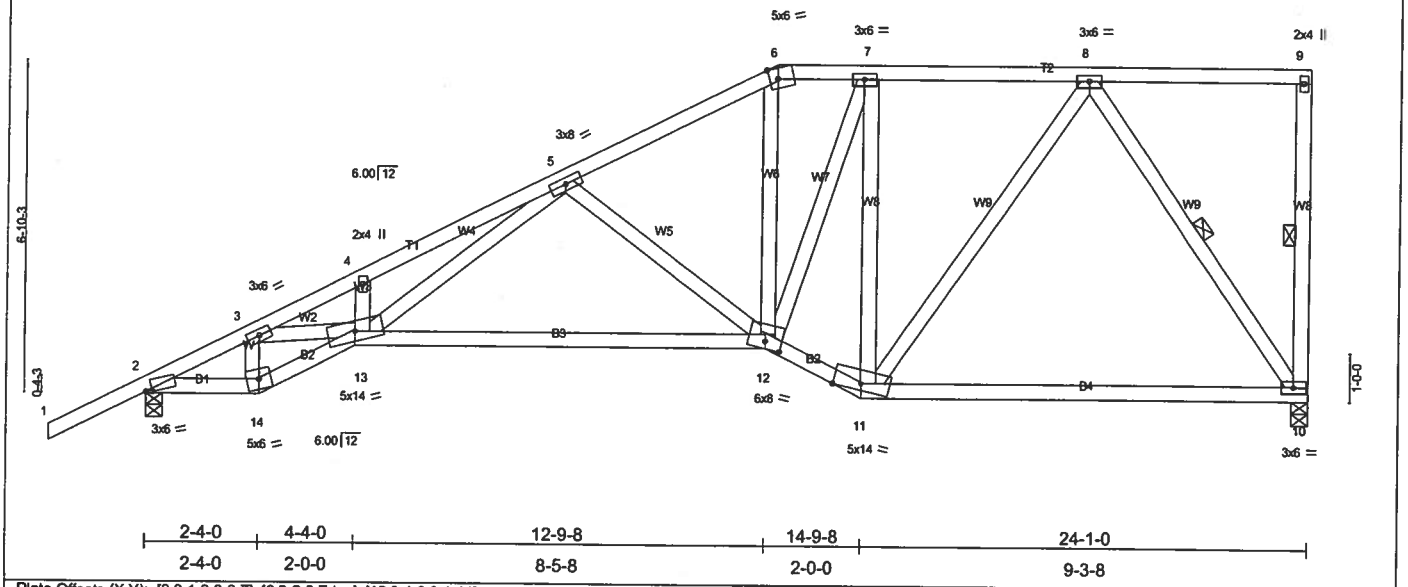

2-4-0	4-4-0	12-9-8	14-9-8	24-1-0
2-4-0	2-0-0	8-5-8	2-0-0	9-3-8

Plate Offsets (X,Y): [2:0-1-9,0-0-7], [6:0-2-3,Edge], [12:0-4-0,0-1-11]

LOADING (psf)		SPACING	2-0-0	CSI		DEFL	in	(loc)	l/defl	L/d	PLATES	GRIP
TCLL	20.0	Plates Increase	1.25	TC	0.52	Vert(LL)	-0.25	12-13	>999	240	MT20	244/190
TCDL	7.0	Lumber Increase	1.25	BC	0.52	Vert(TL)	-0.41	12-13	>702	180		
BCLL	10.0	Rep Stress Incr	YES	WB	0.55	Horz(TL)	0.11	10	n/a	n/a		
BCDL	5.0	Code FBC2004/TPI2002		(Matrix)							Weight: 157 lb	

LUMBER
TOP CHORD 2 X 4 SYP No.2
BOT CHORD 2 X 4 SYP No.2
WEBS 2 X 4 SYP No.3

BRACING
TOP CHORD Structural wood sheathing directly applied or 3-4-10 oc purlins, except end verticals.
BOT CHORD Rigid ceiling directly applied or 6-9-12 oc bracing.
WEBS 1 Row at midpt 9-10, 8-10

REACTIONS (lb/size) 10=993/0-4-0, 2=1121/0-4-0
Max Horz 2=364(load case 5)
Max Uplift10=-339(load case 4), 2=-429(load case 5)

FORCES (lb) - Maximum Compression/Maximum Tension
TOP CHORD 1-2=0/47, 2-3=-1751/523, 3-4=-3069/1219, 4-5=-3065/1313, 5-6=-1296/542, 6-7=-1090/525, 7-8=-889/406, 8-9=-33/0, 9-10=-116/72
BOT CHORD 2-14=-730/1491, 13-14=-747/1584, 12-13=-846/1585, 11-12=-449/977, 10-11=-270/546
WEBS 3-14=-705/361, 3-13=-657/1322, 4-13=-125/174, 5-13=-633/1457, 5-12=-619/410, 6-12=-106/398, 7-12=-356/602, 7-11=-719/432, 8-11=-235/594, 8-10=-905/478

JOINT STRESS INDEX
2 = 0.77, 3 = 0.65, 4 = 0.34, 5 = 0.74, 6 = 0.45, 7 = 0.56, 8 = 0.45, 9 = 0.80, 10 = 0.68, 11 = 0.58, 12 = 0.48, 13 = 0.54 and 14 = 0.44

NOTES
1) Wind: ASCE 7-02; 110mph (3-second gust); h=20ft; TCDL=4.2psf; BCDL=3.0psf; Category II; Exp B; enclosed; MWFRS gable end zone and C-C Exterior(2) zone; Lumber DOL=1.60 plate grip DOL=1.60. This truss is designed for C-C for members and forces, and for MWFRS for reactions specified.
2) Provide adequate drainage to prevent water ponding.
3) All bearings are assumed to be SYP No.2 crushing capacity of 565.00 psi
4) Provide mechanical connection (by others) of truss to bearing plate capable of withstanding 339 lb uplift at joint 10 and 429 lb uplift at joint 2.

LOAD CASE(S) Standard

AUGUST 31, 2006 TRUSS DESIGN ENGINEER:
THOMAS E. MILLER PE 56877, BYRON K. ANDERSON PE 60987
STRUCTURAL ENGINEERING AND INSPECTIONS, INC. EB 9196
16105 N. FLORIDA AVE. STE B, LUTZ, FL 33549

Dwg.#0831061184

Job	Truss	Truss Type	Qty	Ply	CORNERSTONE-SAMUEL EC
L209085	T12T	SPECIAL	1	1	Job Reference (optional)

Builders FirstSource, Lake City, Fl 32055

6.200 s Jul 13 2005 MiTek Industries, Inc. Thu Aug 31 13:40:22 2006 Page 1

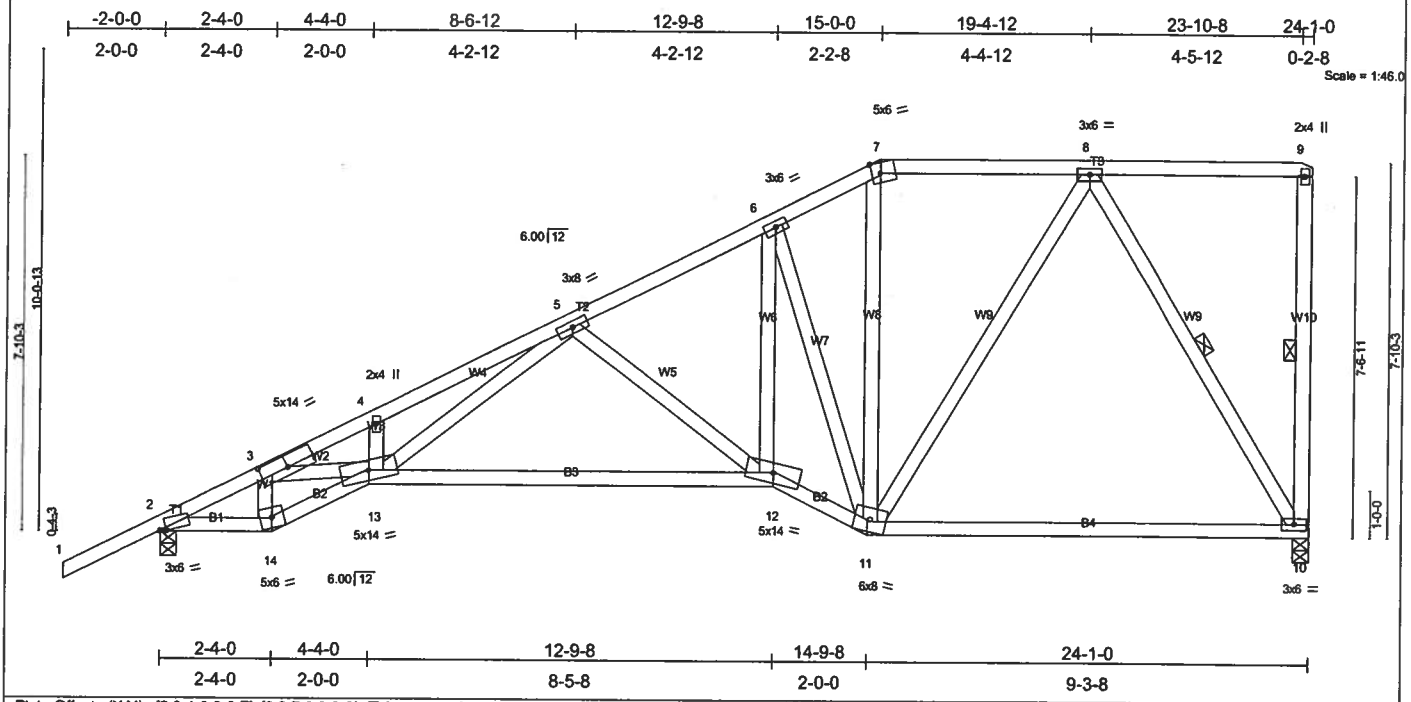

Plate Offsets (X,Y): [2:0-1-9,0-0-7], [3:0-7-0,0-3-0], [7:0-2-3,Edge]

LOADING (psf)		SPACING	2-0-0	CSI		DEFL	in	(loc)	l/defl	L/d	PLATES	GRIP
TCLL	20.0	Plates Increase	1.25	TC	0.49	Vert(LL)	-0.26	12-13	>999	240	MT20	244/190
TCDL	7.0	Lumber Increase	1.25	BC	0.59	Vert(TL)	-0.43	12-13	>667	180		
BCLL	10.0	Rep Stress Incr	YES	WB	0.87	Horz(TL)	0.12	10	n/a	n/a		
BCDL	5.0	Code FBC2004/TPI2002		(Matrix)							Weight: 163 lb	

LUMBER
TOP CHORD 2 X 4 SYP No.2
BOT CHORD 2 X 4 SYP No.2
WEBS 2 X 4 SYP No.3

BRACING
TOP CHORD Structural wood sheathing directly applied or 3-4-11 oc purlins, except end verticals.
BOT CHORD Rigid ceiling directly applied or 6-7-14 oc bracing.
WEBS 1 Row at midpt 9-10, 8-10

REACTIONS (lb/size) 2=1121/0-4-0, 10=993/0-4-0
Max Horz 2=410(load case 5)
Max Uplift2=-427(load case 5), 10=-326(load case 4)

FORCES (lb) - Maximum Compression/Maximum Tension
TOP CHORD 1-2=0/47, 2-3=-1749/498, 3-4=-3073/1220, 4-5=-3067/1311, 5-6=-1297/520, 6-7=-895/395, 7-8=-777/378, 8-9=-28/0, 9-10=-119/74
BOT CHORD 2-14=-759/1490, 13-14=-778/1584, 12-13=-889/1600, 11-12=-654/1266, 10-11=-247/475
WEBS 3-14=-709/376, 3-13=-681/1327, 4-13=-120/171, 5-13=-646/1448, 5-12=-625/411, 6-12=-523/1079, 6-11=-1108/626, 7-11=-46/195, 8-11=-253/580, 8-10=-869/479

JOINT STRESS INDEX
2 = 0.77, 3 = 0.55, 4 = 0.34, 5 = 0.74, 6 = 0.80, 7 = 0.45, 8 = 0.46, 9 = 0.79, 10 = 0.64, 11 = 0.64, 12 = 0.55, 13 = 0.54 and 14 = 0.44

NOTES
1) Wind: ASCE 7-02; 110mph (3-second gust); h=20ft; TCDL=4.2psf; BCDL=3.0psf; Category II; Exp B; enclosed; MWFRS gable end zone and C-C Exterior(2) zone; Lumber DOL=1.60 plate grip DOL=1.60. This truss is designed for C-C for members and forces, and for MWFRS for reactions specified.
2) Provide adequate drainage to prevent water ponding.
3) All bearings are assumed to be SYP No.2 crushing capacity of 565.00 psi
4) Provide mechanical connection (by others) of truss to bearing plate capable of withstanding 427 lb uplift at joint 2 and 326 lb uplift at joint 10.

LOAD CASE(S) Standard

AUGUST 31, 2006 TRUSS DESIGN ENGINEER:
THOMAS E. MILLER PE 56877, BYRON K. ANDERSON PE 60987
STRUCTURAL ENGINEERING AND INSPECTIONS, INC. EB 9196
16105 N. FLORIDA AVE. STE B, LUTZ, FL 33549

Dwg.#0831061185

Job	Truss	Truss Type	Qty	Ply	CORNERSTONE-SAMUEL EC
L209085	T13T	SPECIAL	1	1	Job Reference (optional)

Builders FirstSource, Lake City, Fl 32055

6.200 s Jul 13 2005 MiTek Industries, Inc. Thu Aug 31 13:40:26 2006 Page 1

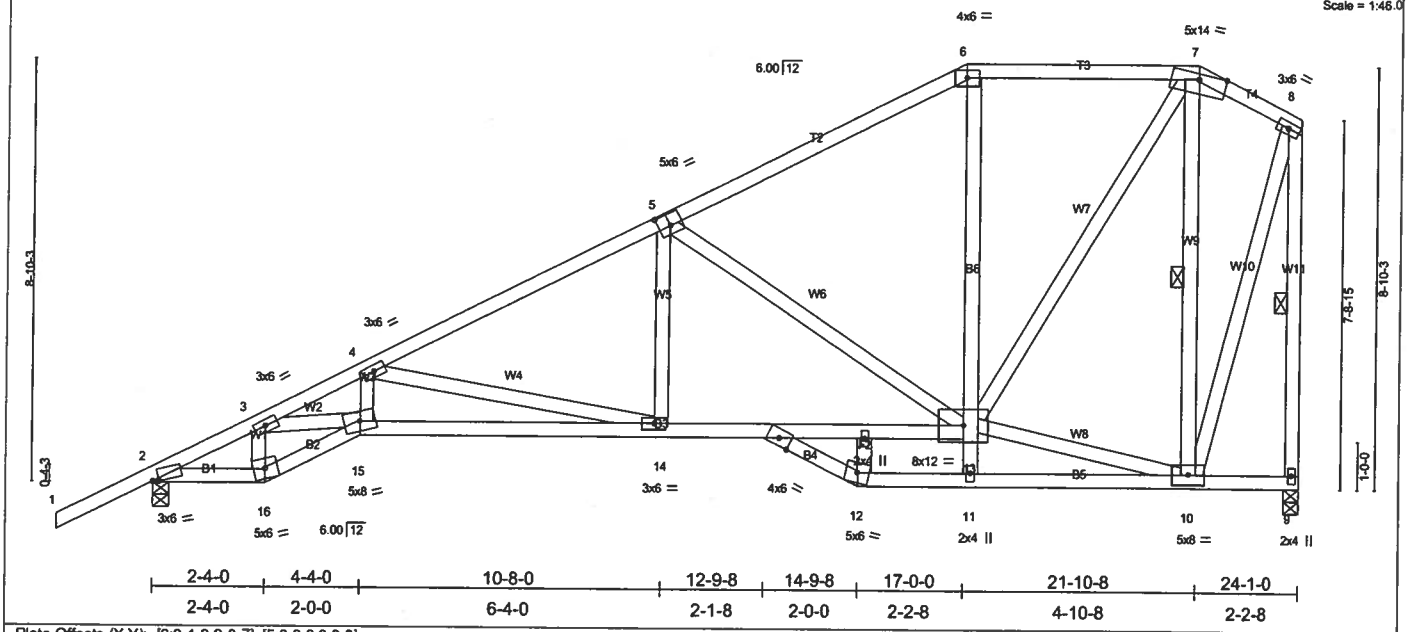

Plate Offsets (X,Y): [2:0-1-9,0-0-7], [5:0-3-0,0-3-0]

LOADING (psf)		SPACING	2-0-0	CSI		DEFL	in	(loc)	l/defl	L/d	PLATES	GRIP
TCLL	20.0	Plates Increase	1.25	TC	0.32	Vert(LL)	-0.19	14-15	>999	240	MT20	244/190
TCDL	7.0	Lumber Increase	1.25	BC	0.72	Vert(TL)	-0.31	14-15	>920	180		
BCLL	10.0	Rep Stress Incr	YES	WB	0.97	Horz(TL)	0.13	9	n/a	n/a		
BCDL	5.0	Code FBC2004/TPI2002		(Matrix)							Weight: 185 lb	

LUMBER
TOP CHORD 2 X 4 SYP No.2
BOT CHORD 2 X 4 SYP No.2 *Except*
B6 2 X 4 SYP No.3, B4 2 X 4 SYP No.3
WEBS 2 X 4 SYP No.3

BRACING
TOP CHORD Structural wood sheathing directly applied or 3-5-1 oc purlins, except end verticals.
BOT CHORD Rigid ceiling directly applied or 5-2-4 oc bracing.
WEBS 1 Row at midpt 7-10, 8-9

REACTIONS (lb/size) 2=1144/0-4-0, 9=1040/0-4-0
Max Horz 2=423(load case 5)
Max Uplift2=-427(load case 5), 9=-337(load case 5)

FORCES (lb) - Maximum Compression/Maximum Tension
TOP CHORD 1-2=0/47, 2-3=-1802/480, 3-4=-3234/1311, 4-5=-1690/615, 5-6=-880/343, 6-7=-710/365, 7-8=-302/149, 8-9=-1003/455
BOT CHORD 2-16=-734/1524, 15-16=-759/1616, 14-15=-1461/2807, 13-14=-730/1443, 11-13=0/152, 6-13=0/91, 11-12=0/0, 10-11=-70/0, 9-10=-4/7
WEBS 3-16=-692/382, 3-15=-805/1460, 4-15=-248/747, 4-14=-1383/743, 5-14=-118/501, 5-13=-883/499, 10-13=-53/290, 7-13=-398/892, 7-10=-809/402, 8-10=-370/869

JOINT STRESS INDEX
2 = 0.80, 3 = 0.72, 4 = 0.55, 5 = 0.65, 6 = 0.76, 7 = 0.42, 8 = 0.73, 9 = 0.41, 10 = 0.54, 11 = 0.34, 12 = 0.20, 13 = 0.57, 14 = 0.40, 15 = 0.78, 16 = 0.41, 17 = 0.34 and 18 = 0.13

NOTES
1) Unbalanced roof live loads have been considered for this design.
2) Wind: ASCE 7-02; 110mph (3-second gust); h=20ft; TCDL=4.2psf; BCDL=3.0psf; Category II; Exp B; enclosed; MWFRS gable end zone and C-C Exterior(2) zone; Lumber DOL=1.60 plate grip DOL=1.60. This truss is designed for C-C for members and forces, and for MWFRS for reactions specified.
3) Provide adequate drainage to prevent water ponding.
4) All bearings are assumed to be SYP No.2 crushing capacity of 565.00 psi
5) Provide mechanical connection (by others) of truss to bearing plate capable of withstanding 427 lb uplift at joint 2 and 337 lb uplift at joint 9.

LOAD CASE(S) Standard

AUGUST 31, 2006 TRUSS DESIGN ENGINEER:
THOMAS E. MILLER PE 56877, BYRON K. ANDERSON PE 60987
STRUCTURAL ENGINEERING AND INSPECTIONS, INC. EB 9196
16105 N. FLORIDA AVE. STE B, LUTZ, FL 33549

Dwg.#0831061186

Job	Truss	Truss Type	Qty	Ply	CORNERSTONE-SAMUEL EC
L209085	T14	HIP	1	1	Job Reference (optional)

Builders FirstSource, Lake City, Fl 32055

6.200 s Jul 13 2005 MiTek Industries, Inc. Thu Aug 31 13:40:30 2006 Page 1

-2-0-0	6-8-5	12-10-3	19-0-0	19-10-8	24-1-0
2-0-0	6-8-5	6-1-13	6-1-13	0-10-8	4-2-8

Scale = 1:50.6

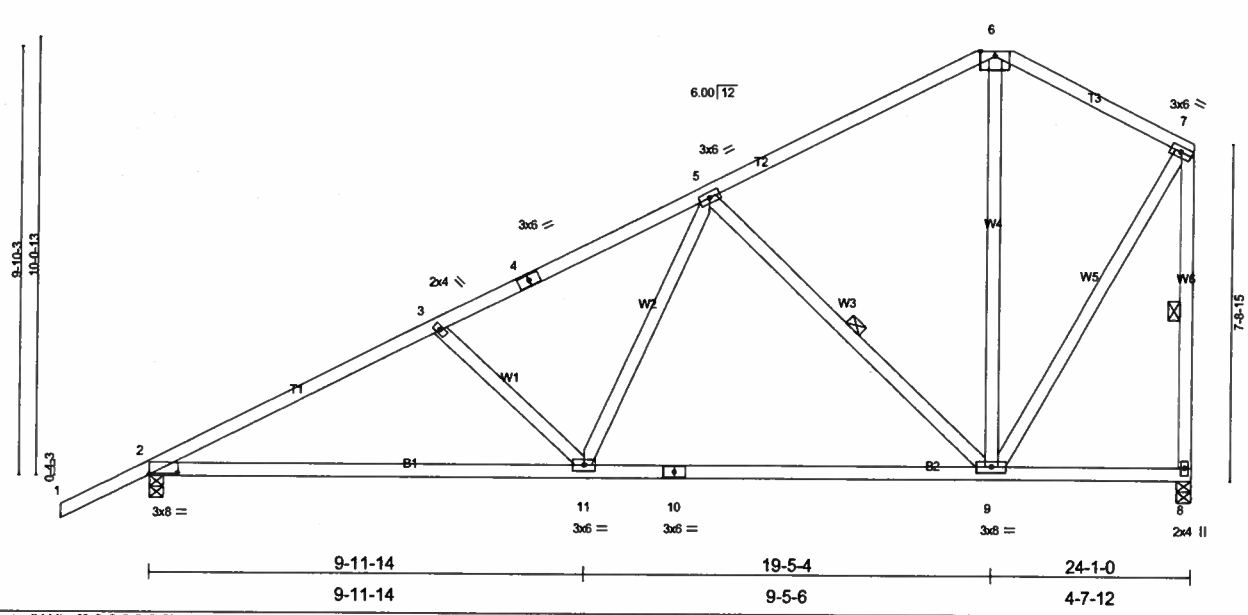

Plate Offsets (X,Y): [2:0-8-0,0-0-6]

LOADING (psf)		SPACING	2-0-0	CSI		DEFL	in	(loc)	l/defl	L/d	PLATES	GRIP
TCLL	20.0	Plates Increase	1.25	TC	0.31	Vert(LL)	-0.22	2-11	>999	240	MT20	244/190
TCDL	7.0	Lumber Increase	1.25	BC	0.61	Vert(TL)	-0.37	2-11	>771	180		
BCLL	10.0	Rep Stress Incr	YES	WB	0.47	Horz(TL)	0.04	8	n/a	n/a		
BCDL	5.0	Code FBC2004/TPI2002		(Matrix)							Weight: 147 lb	

LUMBER
TOP CHORD 2 X 4 SYP No.2
BOT CHORD 2 X 4 SYP No.2
WEBS 2 X 4 SYP No.3

BRACING
TOP CHORD Structural wood sheathing directly applied or 4-6-9 oc purlins, except end verticals.
BOT CHORD Rigid ceiling directly applied or 6-0-0 oc bracing.
WEBS 1 Row at midpt 5-9, 7-8

REACTIONS (lb/size) 2=1121/0-4-0, 8=993/0-4-0
Max Horz 2=440(load case 5)
Max Uplift2=-433(load case 5), 8=-379(load case 5)

FORCES (lb) - Maximum Compression/Maximum Tension
TOP CHORD 1-2=0/47, 2-3=-1633/584, 3-4=-1384/488, 4-5=-1248/509, 5-6=-532/257, 6-7=-491/267, 7-8=-956/489
BOT CHORD 2-11=-801/1405, 10-11=-513/926, 9-10=-513/926, 8-9=-6/8
WEBS 3-11=-330/308, 5-11=-166/601, 5-9=-738/457, 7-9=-354/775, 6-9=0/134

JOINT STRESS INDEX
2 = 0.76, 3 = 0.34, 4 = 0.29, 5 = 0.42, 6 = 0.74, 7 = 0.65, 8 = 0.35, 9 = 0.84, 10 = 0.33 and 11 = 0.52

NOTES
1) Unbalanced roof live loads have been considered for this design.
2) Wind: ASCE 7-02; 110mph (3-second gust); h=20ft; TCDL=4.2psf; BCDL=3.0psf; Category II; Exp B; enclosed; MWFRS gable end zone and C-C Exterior(2) zone; Lumber DOL=1.60 plate grip DOL=1.60. This truss is designed for C-C for members and forces, and for MWFRS for reactions specified.
3) All bearings are assumed to be SYP No.2 crushing capacity of 565.00 psi
4) Provide mechanical connection (by others) of truss to bearing plate capable of withstanding 433 lb uplift at joint 2 and 379 lb uplift at joint 8.

LOAD CASE(S) Standard

AUGUST 31, 2006 TRUSS DESIGN ENGINEER:
THOMAS E. MILLER PE 56877, BYRON K. ANDERSON PE 60987
STRUCTURAL ENGINEERING AND INSPECTIONS, INC. EB 9196
16105 N. FLORIDA AVE. STE B, LUTZ, FL 33549

Dwg.#0831061187

Job	Truss	Truss Type	Qty	Ply	CORNERSTONE-SAMUEL EC
L209085	T15	SPECIAL	4	1	Job Reference (optional)

Builders FirstSource, Lake City, Fl 32055

6.200 s Jul 13 2005 MiTek Industries, Inc. Thu Aug 31 13:40:34 2006 Page 1

-2-0-0	6-4-0	12-10-10	19-5-4	25-3-2	31-1-0	38-10-8	40-10-8
2-0-0	6-4-0	6-6-10	6-6-10	5-9-14	5-9-14	7-9-8	2-0-0

Scale = 1:71.8

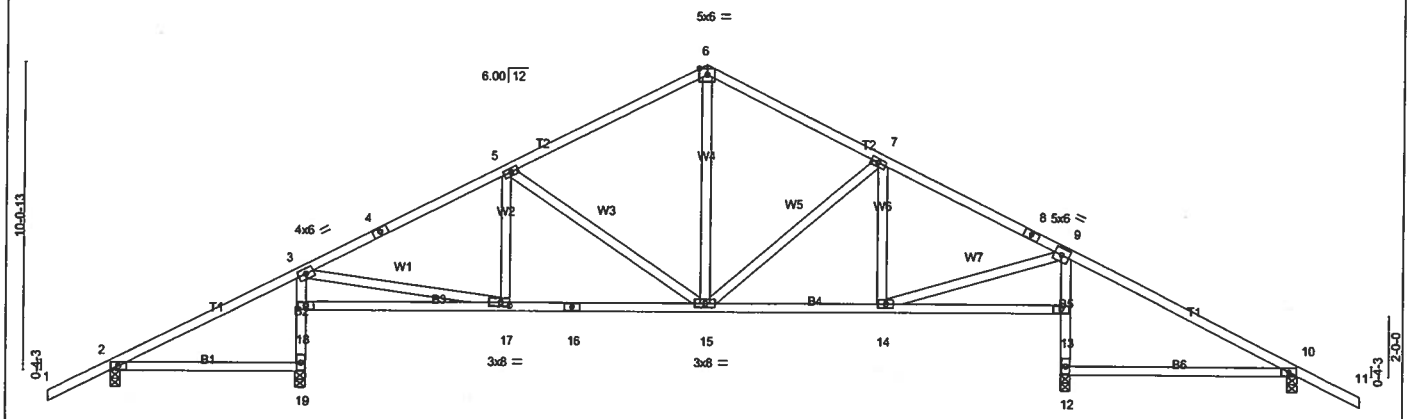

6-4-0	12-10-10	19-5-4	25-3-2	31-1-0	31-2-12	38-10-8
6-4-0	6-6-10	6-6-10	5-9-14	5-9-14	0-1-12	7-7-12

Plate Offsets (X,Y): [17:0-3-8,0-1-8]

LOADING (psf)		SPACING	2-0-0	CSI		DEFL	in	(loc)	l/defl	L/d	PLATES	GRIP
TCLL	20.0	Plates Increase	1.25	TC	0.39	Vert(LL)	0.16	10-12	>567	240	MT20	244/190
TCDL	7.0	Lumber Increase	1.25	BC	0.54	Vert(TL)	-0.16	10-12	>570	180		
BCLL	10.0	Rep Stress Incr	YES	WB	0.47	Horz(TL)	0.02	10	n/a	n/a		
BCDL	5.0	Code FBC2004/TPI2002		(Matrix)							Weight: 204 lb	

LUMBER
TOP CHORD 2 X 4 SYP No.2
BOT CHORD 2 X 4 SYP No.2 *Except*
B2 2 X 4 SYP No.3, B5 2 X 4 SYP No.3
WEBS 2 X 4 SYP No.3

BRACING
TOP CHORD Structural wood sheathing directly applied or 5-1-1 oc purlins.
BOT CHORD Rigid ceiling directly applied or 10-0-0 oc bracing, Except:
4-11-0 oc bracing: 18-19
4-4-6 oc bracing: 12-13.

REACTIONS (lb/size) 2=363/0-4-0, 19=1309/0-4-0, 12=1382/0-3-8, 10=417/0-4-0
Max Horz 2=-174(load case 6)
Max Uplift2=-288(load case 6), 19=-534(load case 5), 12=-468(load case 6), 10=-411(load case 6)
Max Grav 2=364(load case 9), 19=1309(load case 1), 12=1382(load case 1), 10=420(load case 10)

FORCES (lb) - Maximum Compression/Maximum Tension
TOP CHORD 1-2=0/47, 2-3=-109/318, 3-4=-1396/664, 4-5=-1312/686, 5-6=-1037/605, 6-7=-1023/609, 7-8=-1100/632, 8-9=-1179/612, 9-10=-151/296, 10-11=0/47
BOT CHORD 2-19=-49/37, 18-19=-1209/497, 3-18=-1105/515, 17-18=-60/164, 16-17=-295/1173, 15-16=-295/1173, 14-15=-200/984, 13-14=-33/65, 12-13=-1251/496, 9-13=-1161/515, 10-12=-82/61
WEBS 3-17=-245/1024, 5-17=0/89, 5-15=-425/293, 6-15=-266/512, 7-15=-239/214, 7-14=-122/90, 9-14=-187/990

JOINT STRESS INDEX
2 = 0.51, 3 = 0.42, 4 = 0.39, 5 = 0.41, 6 = 0.52, 7 = 0.41, 8 = 0.28, 9 = 0.65, 10 = 0.43, 12 = 0.51, 13 = 0.31, 14 = 0.55, 15 = 0.57, 16 = 0.48, 17 = 0.39, 18 = 0.47 and 19 = 0.35

NOTES
1) Unbalanced roof live loads have been considered for this design.
2) Wind: ASCE 7-02; 110mph (3-second gust); h=20ft; TCDL=4.2psf; BCDL=3.0psf; Category II; Exp B; enclosed; MWFRS gable end zone and C-C Exterior(2) zone; porch left and right exposed; Lumber DOL=1.60 plate grip DOL=1.60. This truss is designed for C-C for members and forces, and for MWFRS for reactions specified.
3) All plates are 3x6 MT20 unless otherwise indicated.
4) All bearings are assumed to be SYP No.2 crushing capacity of 565.00 psi
5) Provide mechanical connection (by others) of truss to bearing plate capable of withstanding 288 lb uplift at joint 2, 534 lb uplift at joint 19, 468 lb uplift at joint 12 and 411 lb uplift at joint 10.

LOAD CASE(S) Standard

AUGUST 31, 2006 TRUSS DESIGN ENGINEER:
THOMAS E. MILLER PE 56877, BYRON K. ANDERSON PE 60987
STRUCTURAL ENGINEERING AND INSPECTIONS, INC. EB 9196
16105 N. FLORIDA AVE. STE B, LUTZ, FL 33549

Dwg.#0831061188

Job	Truss	Truss Type	Qty	Ply	CORNERSTONE-SAMUEL EC
L209085	T16	SPECIAL	1	3	Job Reference (optional)

Builders FirstSource, Lake City, Fl 32055

6.200 s Jul 13 2005 MiTek Industries, Inc. Thu Aug 31 13:40:38 2006 Page 1

-2-0-0	4-0-5	7-0-0	11-11-13	16-11-11	21-11-8	26-9-4	31-10-8
2-0-0	4-0-5	2-11-11	4-11-13	4-11-13	4-11-13	4-9-12	5-1-4

Scale = 1:59.0

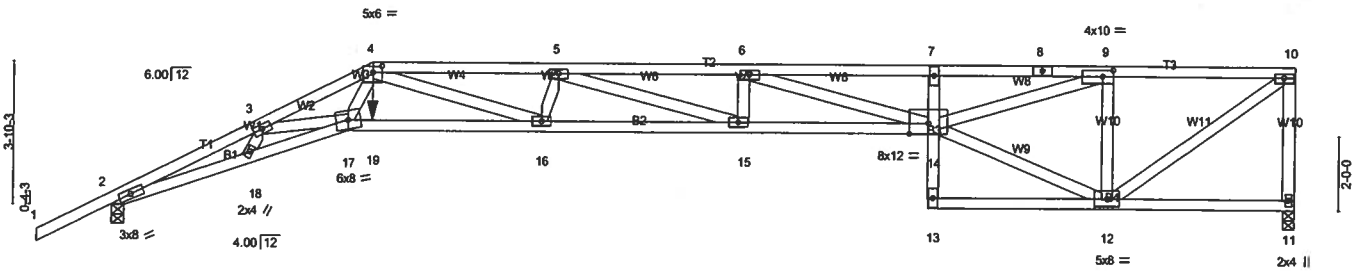

3-8-5	6-4-0	7-0-0	11-6-8	16-11-11	21-11-8	26-9-4	31-10-8
3-8-5	2-7-11	0-8-0	4-6-8	5-5-3	4-11-13	4-9-12	5-1-4

Plate Offsets (X,Y): [4:0-3-0,0-2-0], [9:0-3-8,0-2-0]

LOADING (psf)		SPACING	2-0-0	CSI		DEFL	in	(loc)	l/defl	L/d	PLATES	GRIP
TCLL	20.0	Plates Increase	1.25	TC	0.49	Vert(LL)	-0.80	15-16	>472	240	MT20	244/190
TCDL	7.0	Lumber Increase	1.25	BC	0.84	Vert(TL)	-1.28	15-16	>295	180		
BCLL	10.0	Rep Stress Incr	NO	WB	0.94	Horz(TL)	0.65	11	n/a	n/a		
BCDL	5.0	Code FBC2004/TPI2002		(Matrix)							Weight: 509 lb	

LUMBER
TOP CHORD 2 X 4 SYP No.2
BOT CHORD 2 X 4 SYP No.1D *Except*
B3 2 X 4 SYP No.3, B4 2 X 4 SYP No.2
WEBS 2 X 4 SYP No.3

BRACING
TOP CHORD Structural wood sheathing directly applied or 5-10-6 oc purlins, except end verticals.
BOT CHORD Rigid ceiling directly applied or 10-0-0 oc bracing.

REACTIONS (lb/size) 11=2852/0-3-8, 2=2746/0-4-0
Max Horz 2=225(load case 4)
Max Uplift11=-1179(load case 3), 2=-992(load case 4)

FORCES (lb) - Maximum Compression/Maximum Tension
TOP CHORD 1-2=0/45, 2-3=-11709/4219, 3-4=-13546/5015, 4-5=-13516/5139, 5-6=-14417/5584, 6-7=-12282/4873, 7-8=-11761/4710, 8-9=-11761/4710, 9-10=-3454/1407, 10-11=-2676/1192
BOT CHORD 2-18=-3938/10706, 17-18=-4102/11096, 17-19=-3846/10224, 16-19=-3846/10223, 15-16=-5244/13707, 14-15=-5584/14417, 13-14=0/180, 7-14=-449/324, 12-13=-138/392, 11-12=-43/94
WEBS 3-18=-537/271, 3-17=-770/1714, 4-17=-1718/4841, 4-16=-1416/3479, 5-16=-696/397, 5-15=-405/745, 6-15=0/185, 6-14=-2232/743, 12-14=-1381/3331, 9-14=-3482/8757, 9-12=-3454/1629, 10-12=-1679/4135

JOINT STRESS INDEX
2 = 0.84, 3 = 0.41, 4 = 0.92, 5 = 0.50, 6 = 0.35, 7 = 0.32, 8 = 0.57, 9 = 0.57, 10 = 0.81, 11 = 0.60, 12 = 0.64, 13 = 0.27, 14 = 0.68, 15 = 0.35, 16 = 0.65, 17 = 0.80 and 18 = 0.34

NOTES
1) 3-ply truss to be connected together with 0.131"x3" Nails as follows:
Top chords connected as follows: 2 X 4 - 1 row at 0-9-0 oc.
Bottom chords connected as follows: 2 X 4 - 1 row at 0-7-0 oc.
Webs connected as follows: 2 X 4 - 1 row at 0-9-0 oc.
2) All loads are considered equally applied to all plies, except if noted as front (F) or back (B) face in the LOAD CASE(S) section. Ply to ply connections have been provided to distribute only loads noted as (F) or (B), unless otherwise indicated.
3) Wind: ASCE 7-02; 110mph (3-second gust); h=20ft; TCDL=4.2psf; BCDL=3.0psf; Category II; Exp B; enclosed; MWFRS gable end zone; Lumber DOL=1.60 plate grip DOL=1.60.
4) Provide adequate drainage to prevent water ponding.
5) All plates are 3x6 MT20 unless otherwise indicated.
6) All bearings are assumed to be SYP No.2 crushing capacity of 565.00 psi
7) Bearing at joint(s) 2 considers parallel to grain value using ANSI/TPI 1 angle to grain formula. Building designer should verify capacity of bearing surface.
8) Provide mechanical connection (by others) of truss to bearing plate capable of withstanding 1179 lb uplift at joint 11 and 992 lb uplift at joint 2.
9) Girder carries tie-in span(s): 4-6-2 from 7-0-0 to 21-11-8; 4-3-14 from 7-0-0 to 31-10-8; 4-3-14 from 7-0-0 to 21-11-8
10) Girder carries hip end with 0-0-0 right side setback, 21-11-8 left side setback, and 7-0-0 end setback.
11) Hanger(s) or other connection device(s) shall be provided sufficient to support concentrated load(s) 539 lb down and 204 lb up at 7-0-0 on bottom chord. The design/selection of such connection device(s) is the responsibility of others.

LOAD CASE(S) Standard
1) Regular: Lumber Increase=1.25, Plate Increase=1.25
Uniform Loads (plf)
Vert: 1-4=-54, 4-7=-97(F=-43), 7-10=-117(F=-63), 2-17=-30, 17-19=-30, 14-19=-77(F=-47), 11-13=-65(F=-35)
Concentrated Loads (lb)
Vert: 19=-539(F)

AUGUST 31, 2006 TRUSS DESIGN ENGINEER:
THOMAS E. MILLER PE 56877, BYRON K. ANDERSON PE 60987
STRUCTURAL ENGINEERING AND INSPECTIONS, INC. EB 9196
16105 N. FLORIDA AVE. STE B, LUTZ, FL 33549

Dwg.#0831061189

Job	Truss	Truss Type	Qty	Ply	CORNERSTONE-SAMUEL EC
L209085	T17	SPECIAL	1	1	Job Reference (optional)

Builders FirstSource, Lake City, Fl 32055

6.200 s Jul 13 2005 MiTek Industries, Inc. Thu Aug 31 13:40:43 2006 Page 1

-2-0-0	6-4-0	9-0-0	16-5-12	23-11-8	29-10-8	31-10-8
2-0-0	6-4-0	2-8-0	7-5-12	7-5-12	5-11-0	2-0-0

Scale = 1:59.0

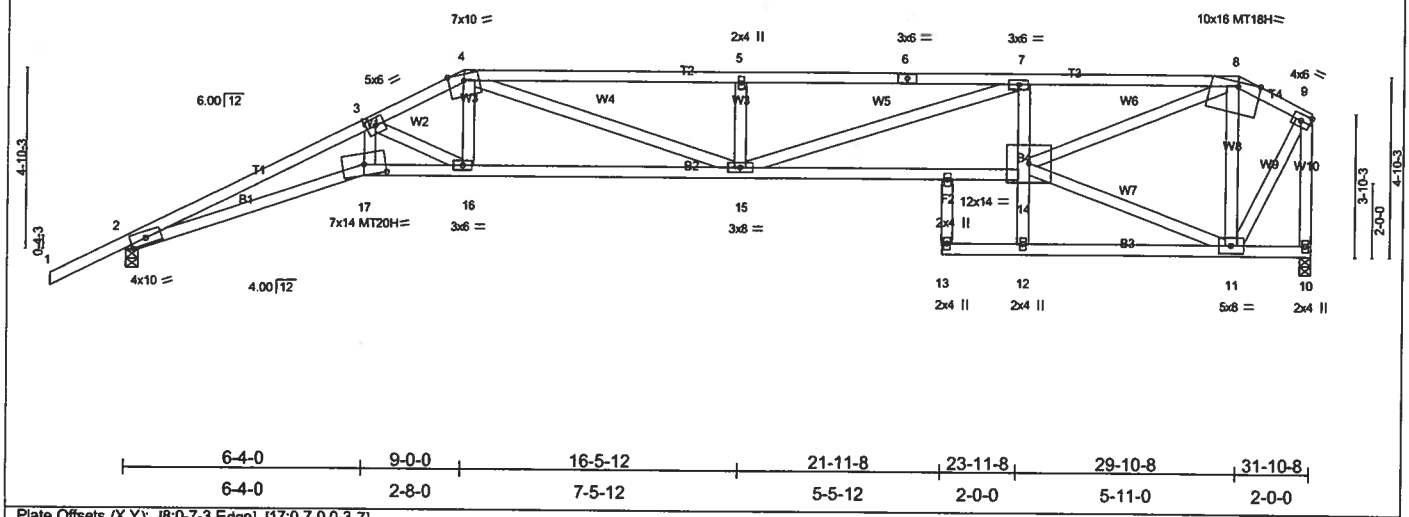

6-4-0	9-0-0	16-5-12	21-11-8	23-11-8	29-10-8	31-10-8
6-4-0	2-8-0	7-5-12	5-5-12	2-0-0	5-11-0	2-0-0

Plate Offsets (X,Y): [8:0-7-3,Edge], [17:0-7-0,0-3-7]

LOADING (psf)		SPACING	2-0-0	CSI		DEFL	in	(loc)	l/defl	L/d	PLATES	GRIP
TCLL	20.0	Plates Increase	1.25	TC	0.85	Vert(LL)	-0.68	15-16	>560	240	MT20	244/190
TCDL	7.0	Lumber Increase	1.25	BC	1.00	Vert(TL)	-1.09	15-16	>348	180	MT20H	187/143
BCLL	10.0	Rep Stress Incr	YES	WB	1.00	Horz(TL)	0.66	10	n/a	n/a	MT18H	244/190
BCDL	5.0	Code FBC2004/TPI2002		(Matrix)							Weight: 182 lb	

LUMBER
TOP CHORD 2 X 4 SYP No.2 *Except*
T1 2 X 4 SYP No.1D
BOT CHORD 2 X 4 SYP No.1D *Except*
B4 2 X 4 SYP No.3, B3 2 X 4 SYP No.2
WEBS 2 X 4 SYP No.3

BRACING
TOP CHORD Structural wood sheathing directly applied or 1-11-10 oc purlins, except end verticals.
BOT CHORD Rigid ceiling directly applied or 1-4-12 oc bracing.

REACTIONS (lb/size) 2=1464/0-4-0, 10=1368/0-3-8
Max Horz 2=241(load case 5)
Max Uplift2=-497(load case 5), 10=-418(load case 3)

FORCES (lb) - Maximum Compression/Maximum Tension
TOP CHORD 1-2=0/45, 2-3=-6117/2430, 3-4=-3801/1552, 4-5=-4309/1718, 5-6=-4309/1718, 6-7=-4309/1718, 7-8=-3438/1326, 8-9=-661/261, 9-10=-1352/515
BOT CHORD 2-17=-2351/5634, 16-17=-2154/5125, 15-16=-1404/3469, 14-15=-1320/3573, 12-14=0/158, 7-14=-609/380, 12-13=0/0, 11-12=-34/51, 10-11=-5/11
WEBS 3-17=-673/1815, 3-16=-1903/856, 4-16=-379/1057, 4-15=-425/1033, 5-15=-404/298, 7-15=-371/789, 11-14=-184/548, 8-14=-1157/3105, 8-11=-1140/500, 9-11=-447/1211

JOINT STRESS INDEX
2 = 0.99, 3 = 0.79, 4 = 0.89, 5 = 0.34, 6 = 0.75, 7 = 0.77, 8 = 0.38, 9 = 0.71, 10 = 0.49, 11 = 0.63, 12 = 0.46, 13 = 0.34, 14 = 0.92, 15 = 0.95, 16 = 0.69, 17 = 0.93 and 18 = 0.34

NOTES
1) Unbalanced roof live loads have been considered for this design.
2) Wind: ASCE 7-02; 110mph (3-second gust); h=20ft; TCDL=4.2psf; BCDL=3.0psf; Category II; Exp B; enclosed; MWFRS gable end zone and C-C Exterior(2) zone; Lumber DOL=1.60 plate grip DOL=1.60. This truss is designed for C-C for members and forces, and for MWFRS for reactions specified.
3) Provide adequate drainage to prevent water ponding.
4) All plates are MT20 plates unless otherwise indicated.
5) All bearings are assumed to be SYP No.2 crushing capacity of 565.00 psi
6) Bearing at joint(s) 2 considers parallel to grain value using ANSI/TPI 1 angle to grain formula. Building designer should verify capacity of bearing surface.
7) Provide mechanical connection (by others) of truss to bearing plate capable of withstanding 497 lb uplift at joint 2 and 418 lb uplift at joint 10.

LOAD CASE(S) Standard

AUGUST 31, 2006 TRUSS DESIGN ENGINEER:
THOMAS E. MILLER PE 56877, BYRON K. ANDERSON PE 60987
STRUCTURAL ENGINEERING AND INSPECTIONS, INC. EB 9196
16105 N. FLORIDA AVE. STE B, LUTZ, FL 33549

Dwg.#0831061190

Job	Truss	Truss Type	Qty	Ply	CORNERSTONE-SAMUEL EC
L209085	T18	SPECIAL	1	1	Job Reference (optional)

Builders FirstSource, Lake City, Fl 32055

6.200 s Jul 13 2005 MiTek Industries, Inc. Thu Aug 31 13:40:47 2006 Page 1

-2-0-0	6-4-0	11-0-0	17-5-12	23-11-8	27-10-8	31-10-8
2-0-0	6-4-0	4-8-0	6-5-12	6-5-12	3-11-0	4-0-0

Scale = 1:59.0

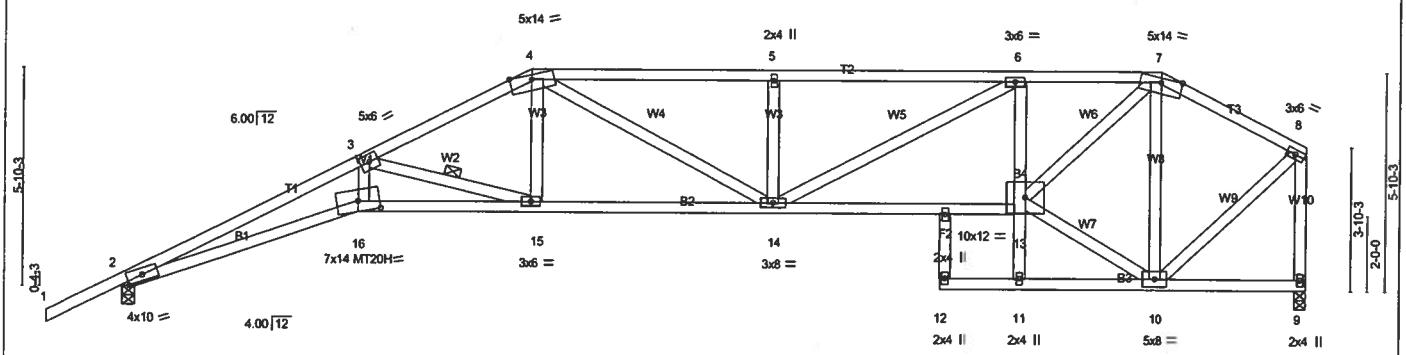

6-4-0	11-0-0	17-5-12	21-11-8	23-11-8	27-10-8	31-10-8
6-4-0	4-8-0	6-5-12	4-5-12	2-0-0	3-11-0	4-0-0

Plate Offsets (X,Y): [16:0-7-0,0-3-7]

LOADING (psf)		SPACING	2-0-0	CSI		DEFL	in	(loc)	l/defl	L/d	PLATES	GRIP
TCLL	20.0	Plates Increase	1.25	TC	0.83	Vert(LL)	-0.57	15-16	>660	240	MT20	244/190
TCDL	7.0	Lumber Increase	1.25	BC	0.99	Vert(TL)	-0.92	15-16	>412	180	MT20H	187/143
BCLL	10.0	Rep Stress Incr	YES	WB	0.68	Horz(TL)	0.57	9	n/a	n/a		
BCDL	5.0	Code FBC2004/TPI2002		(Matrix)							Weight: 187 lb	

LUMBER
TOP CHORD 2 X 4 SYP No.2 *Except*
T1 2 X 4 SYP No.1D
BOT CHORD 2 X 4 SYP No.1D *Except*
B4 2 X 4 SYP No.3, B3 2 X 4 SYP No.2
WEBS 2 X 4 SYP No.3

BRACING
TOP CHORD Structural wood sheathing directly applied or 2-0-2 oc purlins, except end verticals.
BOT CHORD Rigid ceiling directly applied or 2-2-0 oc bracing.
WEBS 1 Row at midpt 3-15

REACTIONS (lb/size) 2=1464/0-4-0, 9=1368/0-3-8
Max Horz 2=255(load case 5)
Max Uplift2=-514(load case 5), 9=-363(load case 3)

FORCES (lb) - Maximum Compression/Maximum Tension
TOP CHORD 1-2=0/45, 2-3=-6149/2480, 3-4=-3088/1271, 4-5=-3060/1270, 5-6=-3059/1270, 6-7=-2441/983, 7-8=-1023/419, 8-9=-1303/538
BOT CHORD 2-16=-2397/5666, 15-16=-2196/5145, 14-15=-1105/2775, 13-14=-911/2507, 11-13=0/128, 6-13=-598/338, 11-12=0/0, 10-11=-29/7, 9-10=-16/29
WEBS 3-16=-690/1895, 3-15=-2495/1144, 4-15=-298/874, 4-14=-236/490, 5-14=-361/259, 6-14=-297/656, 10-13=-327/982, 7-13=-768/2127, 7-10=-1177/482, 8-10=-409/1137

JOINT STRESS INDEX
2 = 1.00, 3 = 0.84, 4 = 0.81, 5 = 0.34, 6 = 0.61, 7 = 0.77, 8 = 0.84, 9 = 0.63, 10 = 0.54, 11 = 0.34, 12 = 0.34, 13 = 0.87, 14 = 0.62, 15 = 0.69, 16 = 0.93 and 17 = 0.34

NOTES
1) Unbalanced roof live loads have been considered for this design.
2) Wind: ASCE 7-02; 110mph (3-second gust); h=20ft; TCDL=4.2psf; BCDL=3.0psf; Category II; Exp B; enclosed; MWFRS gable end zone and C-C Exterior(2) zone; Lumber DOL=1.60 plate grip DOL=1.60. This truss is designed for C-C for members and forces, and for MWFRS for reactions specified.
3) Provide adequate drainage to prevent water ponding.
4) All plates are MT20 plates unless otherwise indicated.
5) All bearings are assumed to be SYP No.2 crushing capacity of 565.00 psi
6) Bearing at joint(s) 2 considers parallel to grain value using ANSI/TPI 1 angle to grain formula. Building designer should verify capacity of bearing surface.
7) Provide mechanical connection (by others) of truss to bearing plate capable of withstanding 514 lb uplift at joint 2 and 363 lb uplift at joint 9.

LOAD CASE(S) Standard

AUGUST 31, 2006 TRUSS DESIGN ENGINEER:
THOMAS E. MILLER PE 56877, BYRON K. ANDERSON PE 60987
STRUCTURAL ENGINEERING AND INSPECTIONS, INC. EB 9196
16105 N. FLORIDA AVE. STE B, LUTZ, FL 33549

Dwg.#0831061191

Job	Truss	Truss Type	Qty	Ply	CORNERSTONE-SAMUEL EC
L209085	T19	SPECIAL	1	1	Job Reference (optional)

Builders FirstSource, Lake City, Fl 32055

6.200 s Jul 13 2005 MiTek Industries, Inc. Thu Aug 31 13:40:52 2006 Page 1

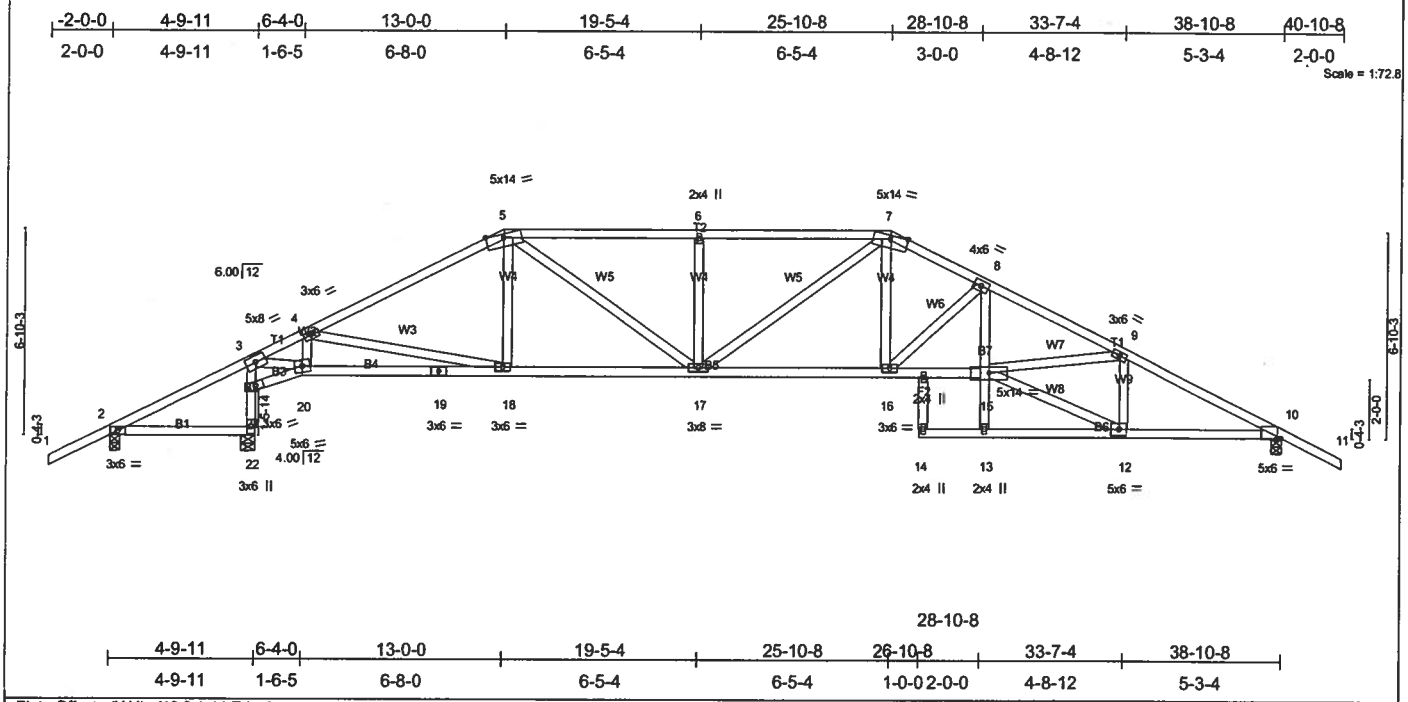

Plate Offsets (X,Y): [10:0-1-11,Edge]

LOADING (psf)		SPACING	2-0-0	CSI		DEFL	in	(loc)	l/defl	L/d	PLATES	GRIP
TCLL	20.0	Plates Increase	1.25	TC	0.44	Vert(LL)	-0.35	14	>999	240	MT20	244/190
TCDL	7.0	Lumber Increase	1.25	BC	0.87	Vert(TL)	-0.57	14	>722	180		
BCLL	10.0	Rep Stress Incr	YES	WB	0.81	Horz(TL)	0.20	10	n/a	n/a		
BCDL	5.0	Code FBC2004/TPI2002		(Matrix)							Weight: 221 lb	

LUMBER
TOP CHORD 2 X 4 SYP No.2
BOT CHORD 2 X 4 SYP No.2 *Except*
B7 2 X 4 SYP No.3
WEBS 2 X 4 SYP No.3

BRACING
TOP CHORD Structural wood sheathing directly applied or 2-11-15 oc purlins.
BOT CHORD Rigid ceiling directly applied or 3-3-12 oc bracing.
JOINTS 1 Brace at Jt(s): 15

REACTIONS (lb/size) 2=135/0-4-0, 22=1832/0-5-11, 10=1569/0-4-0
Max Horz 2=-129(load case 6)
Max Uplift2=-218(load case 5), 22=-557(load case 5), 10=-563(load case 6)
Max Grav 2=155(load case 9), 22=1832(load case 1), 10=1569(load case 1)

FORCES (lb) - Maximum Compression/Maximum Tension
TOP CHORD 1-2=0/47, 2-3=-115/435, 3-4=-1499/642, 4-5=-2236/901, 5-6=-2625/1111, 6-7=-2625/1111, 7-8=-2856/1131, 8-9=-3992/1442, 9-10=-2726/1036, 10-11=0/47
BOT CHORD 2-22=-319/118, 21-22=-1800/673, 3-21=-1461/501, 20-21=-839/387, 19-20=-426/1419, 18-19=-426/1419, 17-18=-467/1938, 16-17=-653/2575, 15-16=-995/3509, 13-15=0/153, 8-15=-313/1205, 13-14=0/0, 12-13=-32/80, 10-12=-757/2360
WEBS 3-20=-749/2165, 4-20=-660/367, 4-18=-176/627, 5-18=0/131, 5-17=-297/933, 6-17=-362/260, 7-17=-179/234, 7-16=-260/934, 8-16=-1294/471, 12-15=-799/2513, 9-15=-252/1163, 9-12=-939/394

JOINT STRESS INDEX
2 = 0.68, 3 = 0.54, 4 = 0.41, 5 = 0.98, 6 = 0.34, 7 = 0.74, 8 = 0.76, 9 = 0.59, 10 = 0.69, 12 = 0.81, 13 = 0.59, 14 = 0.34, 15 = 0.91, 16 = 0.61, 17 = 0.90, 18 = 0.35, 19 = 0.59, 20 = 0.64, 21 = 0.74, 22 = 0.33 and 23 = 0.34

NOTES
1) Unbalanced roof live loads have been considered for this design.
2) Wind: ASCE 7-02; 110mph (3-second gust); h=20ft; TCDL=4.2psf; BCDL=3.0psf; Category II; Exp B; enclosed; MWFRS gable end zone and C-C Exterior(2) zone; porch left exposed; Lumber DOL=1.60 plate grip DOL=1.60. This truss is designed for C-C for members and forces, and for MWFRS for reactions specified.
3) Provide adequate drainage to prevent water ponding.
4) All bearings are assumed to be SYP No.2 crushing capacity of 565.00 psi
5) Provide mechanical connection (by others) of truss to bearing plate capable of withstanding 218 lb uplift at joint 2, 557 lb uplift at joint 22 and 563 lb uplift at joint 10.

LOAD CASE(S) Standard

AUGUST 31, 2006 TRUSS DESIGN ENGINEER:
THOMAS E. MILLER PE 56877, BYRON K. ANDERSON PE 60987
STRUCTURAL ENGINEERING AND INSPECTIONS, INC. EB 9196
16105 N. FLORIDA AVE. STE B, LUTZ, FL 33549

Dwg.#0831061192

Job	Truss	Truss Type	Qty	Ply	CORNERSTONE-SAMUEL EC
L209085	T20	SPECIAL	1	1	Job Reference (optional)

Builders FirstSource, Lake City, Fl 32055

6.200 s Jul 13 2005 MiTek Industries, Inc. Thu Aug 31 13:40:56 2006 Page 1

-2-0-0	6-4-0	10-8-0	15-0-0	19-5-4	23-10-8	28-10-8	33-7-4	38-10-8	40-10-8
2-0-0	6-4-0	4-4-0	4-4-0	4-5-4	4-5-4	5-0-0	4-8-12	5-3-4	2-0-0

Scale = 1:72.8

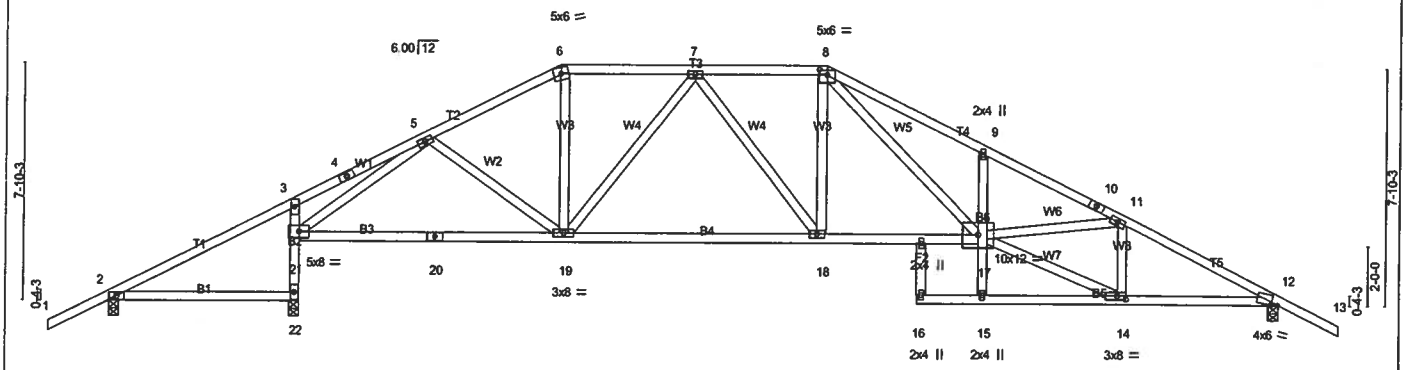

6-4-0	15-0-0	23-10-8	26-10-8	28-10-8	33-7-4	38-10-8
6-4-0	8-8-0	8-10-8	3-0-0	2-0-0	4-8-12	5-3-4

Plate Offsets (X,Y): [8:0-3-0,0-2-0], [12:0-2-13,0-0-11], [14:0-3-8,0-1-8]

LOADING (psf)		SPACING	2-0-0	CSI		DEFL	in	(loc)	l/defl	L/d	PLATES	GRIP
TCLL	20.0	Plates Increase	1.25	TC	0.33	Vert(LL)	-0.32	16	>999	240	MT20	244/190
TCDL	7.0	Lumber Increase	1.25	BC	0.66	Vert(TL)	-0.52	16	>751	180		
BCLL	10.0	Rep Stress Incr	YES	WB	0.97	Horz(TL)	0.16	12	n/a	n/a		
BCDL	5.0	Code FBC2004/TPI2002		(Matrix)							Weight: 224 lb	

LUMBER
TOP CHORD 2 X 4 SYP No.2
BOT CHORD 2 X 4 SYP No.2 *Except*
B2 2 X 4 SYP No.3, B6 2 X 4 SYP No.3
WEBS 2 X 4 SYP No.3

BRACING
TOP CHORD Structural wood sheathing directly applied or 3-1-9 oc purlins.
BOT CHORD Rigid ceiling directly applied or 3-11-7 oc bracing.

REACTIONS (lb/size) 2=328/0-4-0, 22=1690/0-4-0, 12=1518/0-4-0
Max Horz 2=143(load case 5)
Max Uplift2=-293(load case 5), 22=-553(load case 5), 12=-571(load case 6)
Max Grav 2=335(load case 9), 22=1690(load case 1), 12=1518(load case 1)

FORCES (lb) - Maximum Compression/Maximum Tension
TOP CHORD 1-2=0/47, 2-3=-42/266, 3-4=-108/232, 4-5=-43/247, 5-6=-1851/818, 6-7=-1626/786, 7-8=-2063/929, 8-9=-3666/1509, 9-10=-3589/1362, 10-11=-3649/1346, 11-12=-2617/1015, 12-13=0/47
BOT CHORD 2-22=-39/0, 21-22=-1597/598, 3-21=-358/249, 20-21=-405/1460, 19-20=-405/1460, 18-19=-451/1924, 17-18=-468/2061, 15-17=0/152, 9-17=-254/273, 15-16=0/0, 14-15=-41/74, 12-14=-737/2263
WEBS 5-21=-1820/617, 5-19=-21/287, 6-19=-168/539, 7-19=-557/208, 7-18=-67/278, 8-18=-52/214, 8-17=-700/1714, 14-17=-760/2387, 11-17=-203/958, 11-14=-832/361

JOINT STRESS INDEX
2 = 0.52, 3 = 0.29, 4 = 0.15, 5 = 0.54, 6 = 0.41, 7 = 0.40, 8 = 0.73, 9 = 0.34, 10 = 0.44, 11 = 0.48, 12 = 0.87, 14 = 0.96, 15 = 0.53, 16 = 0.34, 17 = 1.00, 18 = 0.40, 19 = 0.57, 20 = 0.70, 21 = 0.83, 22 = 0.36 and 23 = 0.34

NOTES
1) Unbalanced roof live loads have been considered for this design.
2) Wind: ASCE 7-02; 110mph (3-second gust); h=20ft; TCDL=4.2psf; BCDL=3.0psf; Category II; Exp B; enclosed; MWFRS gable end zone and C-C Exterior(2) zone; porch left exposed; Lumber DOL=1.60 plate grip DOL=1.60. This truss is designed for C-C for members and forces, and for MWFRS for reactions specified.
3) Provide adequate drainage to prevent water ponding.
4) All plates are 3x6 MT20 unless otherwise indicated.
5) All bearings are assumed to be SYP No.2 crushing capacity of 565.00 psi
6) Provide mechanical connection (by others) of truss to bearing plate capable of withstanding 293 lb uplift at joint 2, 553 lb uplift at joint 22 and 571 lb uplift at joint 12.

LOAD CASE(S) Standard

AUGUST 31, 2006 TRUSS DESIGN ENGINEER:
THOMAS E. MILLER PE 56877, BYRON K. ANDERSON PE 60987
STRUCTURAL ENGINEERING AND INSPECTIONS, INC. EB 9196
16105 N. FLORIDA AVE. STE B, LUTZ, FL 33549

Dwg.#0831061193

Job	Truss	Truss Type	Qty	Ply	CORNERSTONE-SAMUEL EC
L209085	T21	SPECIAL	1	1	Job Reference (optional)

Builders FirstSource, Lake City, Fl 32055 — 6.200 s Jul 13 2005 MiTek Industries, Inc. Thu Aug 31 13:40:59 2006 Page 1

-2-0-0	6-4-0	11-8-0	17-0-0	21-10-8	26-10-8	32-7-4	38-10-8	40-10-8
2-0-0	6-4-0	5-4-0	5-4-0	4-10-8	5-0-0	5-8-12	6-3-4	2-0-0

Scale = 1:72.8

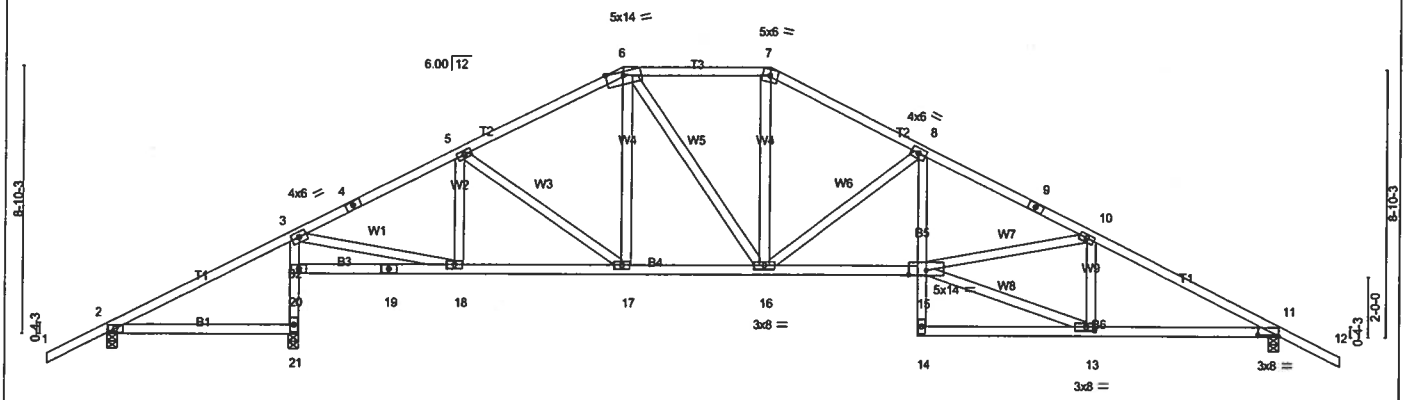

6-4-0	11-8-0	17-0-0	21-10-8	26-10-8	32-7-4	38-10-8
6-4-0	5-4-0	5-4-0	4-10-8	5-0-0	5-8-12	6-3-4

Plate Offsets (X,Y): [11:0-8-0,0-0-6], [13:0-3-8,0-1-8]

LOADING (psf)		SPACING	2-0-0	CSI		DEFL	in	(loc)	l/defl	L/d	PLATES	GRIP
TCLL	20.0	Plates Increase	1.25	TC	0.33	Vert(LL)	-0.22	15-16	>999	240	MT20	244/190
TCDL	7.0	Lumber Increase	1.25	BC	0.59	Vert(TL)	-0.35	15-16	>999	180		
BCLL	10.0	Rep Stress Incr	YES	WB	0.91	Horz(TL)	0.12	11	n/a	n/a		
BCDL	5.0	Code FBC2004/TPI2002		(Matrix)							Weight: 224 lb	

LUMBER
TOP CHORD 2 X 4 SYP No.2
BOT CHORD 2 X 4 SYP No.2 *Except*
B2 2 X 4 SYP No.3, B5 2 X 4 SYP No.3
WEBS 2 X 4 SYP No.3

BRACING
TOP CHORD Structural wood sheathing directly applied or 3-6-2 oc purlins.
BOT CHORD Rigid ceiling directly applied or 4-3-7 oc bracing.

REACTIONS (lb/size) 2=340/0-4-0, 21=1654/0-4-0, 11=1477/0-4-0
Max Horz 2=-157(load case 6)
Max Uplift2=-283(load case 5), 21=-584(load case 5), 11=-592(load case 6)
Max Grav 2=348(load case 9), 21=1654(load case 1), 11=1477(load case 1)

FORCES (lb) - Maximum Compression/Maximum Tension
TOP CHORD 1-2=0/47, 2-3=-73/283, 3-4=-1836/811, 4-5=-1763/829, 5-6=-1733/828, 6-7=-1686/865, 7-8=-1934/902, 8-9=-2927/1249, 9-10=-2999/1230, 10-11=-2503/1044, 11-12=0/47
BOT CHORD 2-21=-36/6, 20-21=-1560/610, 3-20=-1467/622, 19-20=-15/41, 18-19=-15/41, 17-18=-423/1577, 16-17=-285/1497, 15-16=-797/2637, 14-15=0/85, 8-15=-259/912, 13-14=-23/73, 11-13=-753/2157
WEBS 3-18=-456/1615, 5-18=-175/133, 5-17=-160/171, 6-17=-70/240, 6-16=-137/422, 7-16=-203/569, 8-16=-1202/561, 13-15=-780/2229, 10-15=-63/469, 10-13=-609/329

JOINT STRESS INDEX
2 = 0.52, 3 = 0.58, 4 = 0.35, 5 = 0.41, 6 = 0.63, 7 = 0.44, 8 = 0.50, 9 = 0.50, 10 = 0.41, 11 = 0.79, 13 = 0.88, 14 = 0.31, 15 = 0.69, 16 = 0.58, 17 = 0.35, 18 = 0.89, 19 = 0.15, 20 = 0.40 and 21 = 0.37

NOTES
1) Unbalanced roof live loads have been considered for this design.
2) Wind: ASCE 7-02; 110mph (3-second gust); h=20ft; TCDL=4.2psf; BCDL=3.0psf; Category II; Exp B; enclosed; MWFRS gable end zone and C-C Exterior(2) zone; porch left exposed; Lumber DOL=1.60 plate grip DOL=1.60. This truss is designed for C-C for members and forces, and for MWFRS for reactions specified.
3) Provide adequate drainage to prevent water ponding.
4) All plates are 3x6 MT20 unless otherwise indicated.
5) All bearings are assumed to be SYP No.2 crushing capacity of 565.00 psi
6) Provide mechanical connection (by others) of truss to bearing plate capable of withstanding 283 lb uplift at joint 2, 584 lb uplift at joint 21 and 592 lb uplift at joint 11.

LOAD CASE(S) Standard

AUGUST 31, 2006 TRUSS DESIGN ENGINEER:
THOMAS E. MILLER PE 56877, BYRON K. ANDERSON PE 60987
STRUCTURAL ENGINEERING AND INSPECTIONS, INC. EB 9196
16105 N. FLORIDA AVE. STE B, LUTZ, FL 33549

Dwg.#0831061194

Job	Truss	Truss Type	Qty	Ply	CORNERSTONE-SAMUEL EC
L209085	T22	SPECIAL	1	1	Job Reference (optional)

Builders FirstSource, Lake City, Fl 32055

6.200 s Jul 13 2005 MiTek Industries, Inc. Thu Aug 31 13:41:02 2006 Page 1

-2-0-0	6-4-0	12-8-0	19-0-0	19-10-8	26-10-8	32-7-4	38-10-8	40-10-8
2-0-0	6-4-0	6-4-0	6-4-0	0-10-8	7-0-0	5-8-12	6-3-4	2-0-0

Scale = 1:72.8

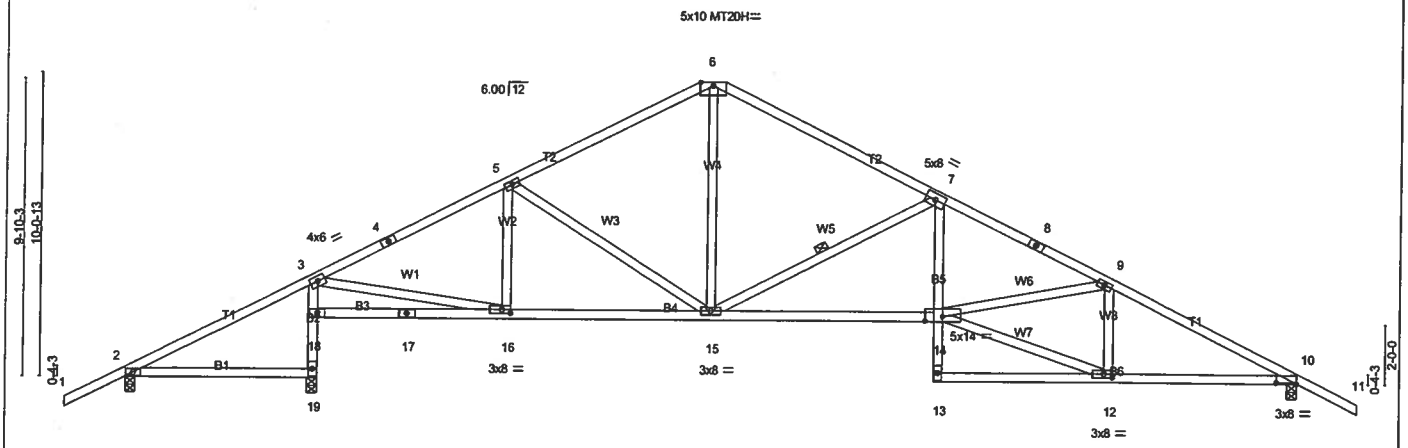

6-4-0	12-8-0	19-5-4	26-10-8	32-7-4	38-10-8
6-4-0	6-4-0	6-9-4	7-5-4	5-8-12	6-3-4

Plate Offsets (X,Y): [10:0-8-0,0-0-6], [12:0-3-8,0-1-8], [16:0-3-8,0-1-8]

LOADING (psf)		SPACING	2-0-0	CSI		DEFL	in	(loc)	l/defl	L/d	PLATES	GRIP
TCLL	20.0	Plates Increase	1.25	TC	0.37	Vert(LL)	-0.26	14-15	>999	240	MT20	244/190
TCDL	7.0	Lumber Increase	1.25	BC	0.70	Vert(TL)	-0.43	14-15	>906	180	MT20H	187/143
BCLL	10.0	Rep Stress Incr	YES	WB	0.72	Horz(TL)	0.13	10	n/a	n/a		
BCDL	5.0	Code FBC2004/TPI2002		(Matrix)							Weight: 213 lb	

LUMBER
TOP CHORD 2 X 4 SYP No.2
BOT CHORD 2 X 4 SYP No.2 *Except*
B2 2 X 4 SYP No.3, B5 2 X 4 SYP No.3
WEBS 2 X 4 SYP No.3

BRACING
TOP CHORD Structural wood sheathing directly applied or 3-6-2 oc purlins.
BOT CHORD Rigid ceiling directly applied or 4-3-9 oc bracing.
WEBS 1 Row at midpt 7-15

REACTIONS (lb/size) 2=340/0-4-0, 19=1654/0-4-0, 10=1477/0-4-0
Max Horz 2=-174(load case 6)
Max Uplift2=-281(load case 6), 19=-611(load case 5), 10=-604(load case 6)
Max Grav 2=349(load case 9), 19=1654(load case 1), 10=1477(load case 1)

FORCES (lb) - Maximum Compression/Maximum Tension
TOP CHORD 1-2=0/47, 2-3=-76/302, 3-4=-1886/837, 4-5=-1803/859, 5-6=-1647/815, 6-7=-1661/808, 7-8=-2946/1274, 8-9=-3014/1255, 9-10=-2501/1057, 10-11=0/47
BOT CHORD 2-19=-41/9, 18-19=-1560/621, 3-18=-1452/636, 17-18=-29/79, 16-17=-29/79, 15-16=-436/1612, 14-15=-845/2686, 13-14=0/84, 7-14=-246/934, 12-13=-37/57, 10-12=-764/2155
WEBS 3-16=-426/1573, 5-16=-95/119, 5-15=-343/242, 7-15=-1443/689, 12-14=-778/2243, 9-14=-60/489, 9-12=-612/328, 6-15=-398/998

JOINT STRESS INDEX
2 = 0.53, 3 = 0.57, 4 = 0.43, 5 = 0.41, 6 = 0.83, 7 = 0.60, 8 = 0.53, 9 = 0.41, 10 = 0.79, 12 = 0.89, 13 = 0.29, 14 = 0.80, 15 = 0.68, 16 = 0.61, 17 = 0.19, 18 = 0.54 and 19 = 0.37

NOTES
1) Unbalanced roof live loads have been considered for this design.
2) Wind: ASCE 7-02; 110mph (3-second gust); h=20ft; TCDL=4.2psf; BCDL=3.0psf; Category II; Exp B; enclosed; MWFRS gable end zone and C-C Exterior(2) zone; porch left exposed; Lumber DOL=1.60 plate grip DOL=1.60. This truss is designed for C-C for members and forces, and for MWFRS for reactions specified.
3) All plates are MT20 plates unless otherwise indicated.
4) All plates are 3x6 MT20 unless otherwise indicated.
5) All bearings are assumed to be SYP No.2 crushing capacity of 565.00 psi
6) Provide mechanical connection (by others) of truss to bearing plate capable of withstanding 281 lb uplift at joint 2, 611 lb uplift at joint 19 and 604 lb uplift at joint 10.

LOAD CASE(S) Standard

AUGUST 31, 2006 TRUSS DESIGN ENGINEER:
THOMAS E. MILLER PE 56877, BYRON K. ANDERSON PE 60987
STRUCTURAL ENGINEERING AND INSPECTIONS, INC. EB 9196
16105 N. FLORIDA AVE. STE B, LUTZ, FL 33549

Dwg.#0831061195

Job	Truss	Truss Type	Qty	Ply	CORNERSTONE-SAMUEL EC
L209085	T23	SPECIAL	1	1	Job Reference (optional)

Builders FirstSource, Lake City, Fl 32055

6.200 s Jul 13 2005 MiTek Industries, Inc. Thu Aug 31 13:41:06 2006 Page 1

-2-0-0	6-4-0	12-10-10	19-5-4	26-10-8	32-7-4	38-10-8	40-10-8
2-0-0	6-4-0	6-6-10	6-6-10	7-5-4	5-8-12	6-3-4	2-0-0

Scale = 1:71.8

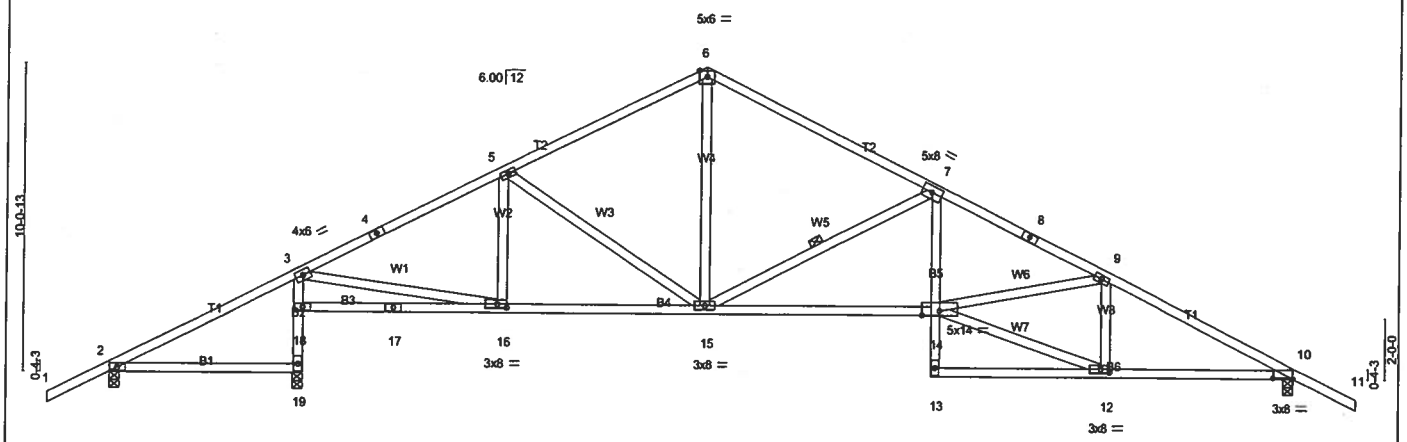

6-4-0	12-10-10	19-5-4	26-10-8	32-7-4	38-10-8
6-4-0	6-6-10	6-6-10	7-5-4	5-8-12	6-3-4

Plate Offsets (X,Y): [10:0-8-0,0-0-6], [12:0-3-8,0-1-8], [16:0-3-8,0-1-8]

LOADING (psf)		SPACING	2-0-0	CSI		DEFL	in	(loc)	l/defl	L/d	PLATES	GRIP
TCLL	20.0	Plates Increase	1.25	TC	0.36	Vert(LL)	-0.27	14-15	>999	240	MT20	244/190
TCDL	7.0	Lumber Increase	1.25	BC	0.71	Vert(TL)	-0.43	14-15	>901	180		
BCLL	10.0	Rep Stress Incr	YES	WB	0.72	Horz(TL)	0.13	10	n/a	n/a		
BCDL	5.0	Code FBC2004/TPI2002		(Matrix)							Weight: 213 lb	

LUMBER
TOP CHORD 2 X 4 SYP No.2
BOT CHORD 2 X 4 SYP No.2 *Except*
B2 2 X 4 SYP No.3, B5 2 X 4 SYP No.3
WEBS 2 X 4 SYP No.3

BRACING
TOP CHORD Structural wood sheathing directly applied or 3-6-2 oc purlins.
BOT CHORD Rigid ceiling directly applied or 4-3-10 oc bracing.
WEBS 1 Row at midpt 7-15

REACTIONS (lb/size) 2=340/0-4-0, 19=1654/0-4-0, 10=1477/0-4-0
Max Horz 2=-174(load case 6)
Max Uplift2=-281(load case 6), 19=-611(load case 5), 10=-604(load case 6)
Max Grav 2=349(load case 9), 19=1654(load case 1), 10=1477(load case 1)

FORCES (lb) - Maximum Compression/Maximum Tension
TOP CHORD 1-2=0/47, 2-3=-76/303, 3-4=-1890/836, 4-5=-1803/859, 5-6=-1643/817, 6-7=-1660/808, 7-8=-2947/1275, 8-9=-3015/1256, 9-10=-2501/1057, 10-11=0/47
BOT CHORD 2-19=-42/9, 18-19=-1560/621, 3-18=-1447/637, 17-18=-35/102, 16-17=-35/102, 15-16=-432/1612, 14-15=-846/2688, 13-14=0/84, 7-14=-246/935, 12-13=-37/57, 10-12=-764/2154
WEBS 3-16=-406/1546, 5-16=-83/113, 5-15=-346/242, 6-15=-405/1005, 7-15=-1446/692, 12-14=-777/2244, 9-14=-60/490, 9-12=-612/328

JOINT STRESS INDEX
2 = 0.53, 3 = 0.58, 4 = 0.45, 5 = 0.41, 6 = 0.70, 7 = 0.60, 8 = 0.53, 9 = 0.41, 10 = 0.79, 12 = 0.89, 13 = 0.29, 14 = 0.80, 15 = 0.68, 16 = 0.60, 17 = 0.20, 18 = 0.58 and 19 = 0.37

NOTES
1) Unbalanced roof live loads have been considered for this design.
2) Wind: ASCE 7-02; 110mph (3-second gust); h=20ft; TCDL=4.2psf; BCDL=3.0psf; Category II; Exp B; enclosed; MWFRS gable end zone and C-C Exterior(2) zone; porch left exposed; Lumber DOL=1.60 plate grip DOL=1.60. This truss is designed for C-C for members and forces, and for MWFRS for reactions specified.
3) All plates are 3x6 MT20 unless otherwise indicated.
4) All bearings are assumed to be SYP No.2 crushing capacity of 565.00 psi
5) Provide mechanical connection (by others) of truss to bearing plate capable of withstanding 281 lb uplift at joint 2, 611 lb uplift at joint 19 and 604 lb uplift at joint 10.

LOAD CASE(S) Standard

AUGUST 31, 2006 TRUSS DESIGN ENGINEER:
THOMAS E. MILLER PE 56877, BYRON K. ANDERSON PE 60987
STRUCTURAL ENGINEERING AND INSPECTIONS, INC. EB 9196
16105 N. FLORIDA AVE. STE B, LUTZ, FL 33549

Symbols

PLATE LOCATION AND ORIENTATION

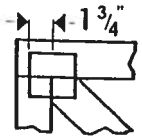

*Center plate on joint unless x, y offsets are indicated. Dimensions are in ft-in-sixteenths. Apply plates to both sides of truss and securely seat.

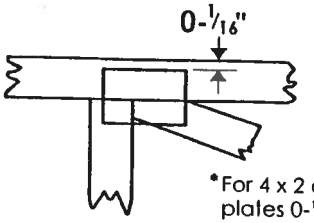

*For 4 x 2 orientation, locate plates 0-1/16" from outside edge of truss.

*This symbol indicates the required direction of slots in connector plates.

***Plate location details available in MiTek 20/20 software or upon request.**

PLATE SIZE

4 x 4 — The first dimension is the width perpendicular to slots. Second dimension is the length parallel to slots.

LATERAL BRACING

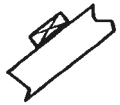

Indicated by symbol shown and/or by text in the bracing section of the output. Use T, I or Eliminator bracing if indicated.

BEARING

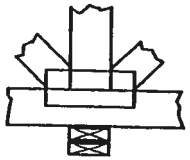

Indicates location where bearings (supports) occur. Icons vary but reaction section indicates joint number where bearings occur.

Industry Standards:

ANSI/TPI1: National Design Specification for Metal Plate Connected Wood Truss Construction.
DSB-89: Design Standard for Bracing.
BCSI1: Building Component Safety Information, Guide to Good Practice for Handling, Installing & Bracing of Metal Plate Connected Wood Trusses.

Numbering System

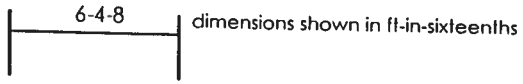

dimensions shown in ft-in-sixteenths

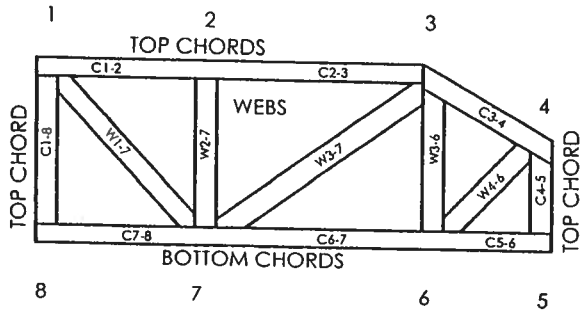

JOINTS ARE GENERALLY NUMBERED/LETTERED CLOCKWISE AROUND THE TRUSS STARTING AT THE JOINT FARTHEST TO THE LEFT.

CHORDS AND WEBS ARE IDENTIFIED BY END JOINT NUMBERS/LETTERS.

CONNECTOR PLATE CODE APPROVALS

BOCA	96-31, 95-43, 96-20-1, 96-67, 84-32
ICBO	4922, 5243, 5363, 3907
SBCCI	9667, 9730, 9604B, 9511, 9432A

MiTek®

TEE-LOK®

MiTek Engineering Reference Sheet: MII-7473

General Safety Notes

Failure to Follow Could Cause Property Damage or Personal Injury

1. Additional stability bracing for truss system, e.g. diagonal or X-bracing, is always required. See BCSI1.
2. Never exceed the design loading shown and never stack materials on inadequately braced trusses.
3. Provide copies of this truss design to the building designer, erection supervisor, property owner and all other interested parties.
4. Cut members to bear tightly against each other.
5. Place plates on each face of truss at each joint and embed fully. Knots and wane at joint locations are regulated by ANSI/TPI1.
6. Design assumes trusses will be suitably protected from the environment in accord with ANSI/TPI1.
7. Unless otherwise noted, moisture content of lumber shall not exceed 19% at time of fabrication.
8. Unless expressly noted, this design is not applicable for use with fire retardant or preservative treated lumber.
9. Camber is a non-structural consideration and is the responsibility of truss fabricator. General practice is to camber for dead load deflection.
10. Plate type, size, orientation and location dimensions shown indicate minimum plating requirements.
11. Lumber used shall be of the species and size, and in all respects, equal to or better than that specified.
12. Top chords must be sheathed or purlins provided at spacing shown on design.
13. Bottom chords require lateral bracing at 10 ft. spacing, or less, if no ceiling is installed, unless otherwise noted.
14. Connections not shown are the responsibility of others.
15. Do not cut or alter truss member or plate without prior approval of a professional engineer.
16. Install and load vertically unless indicated otherwise.

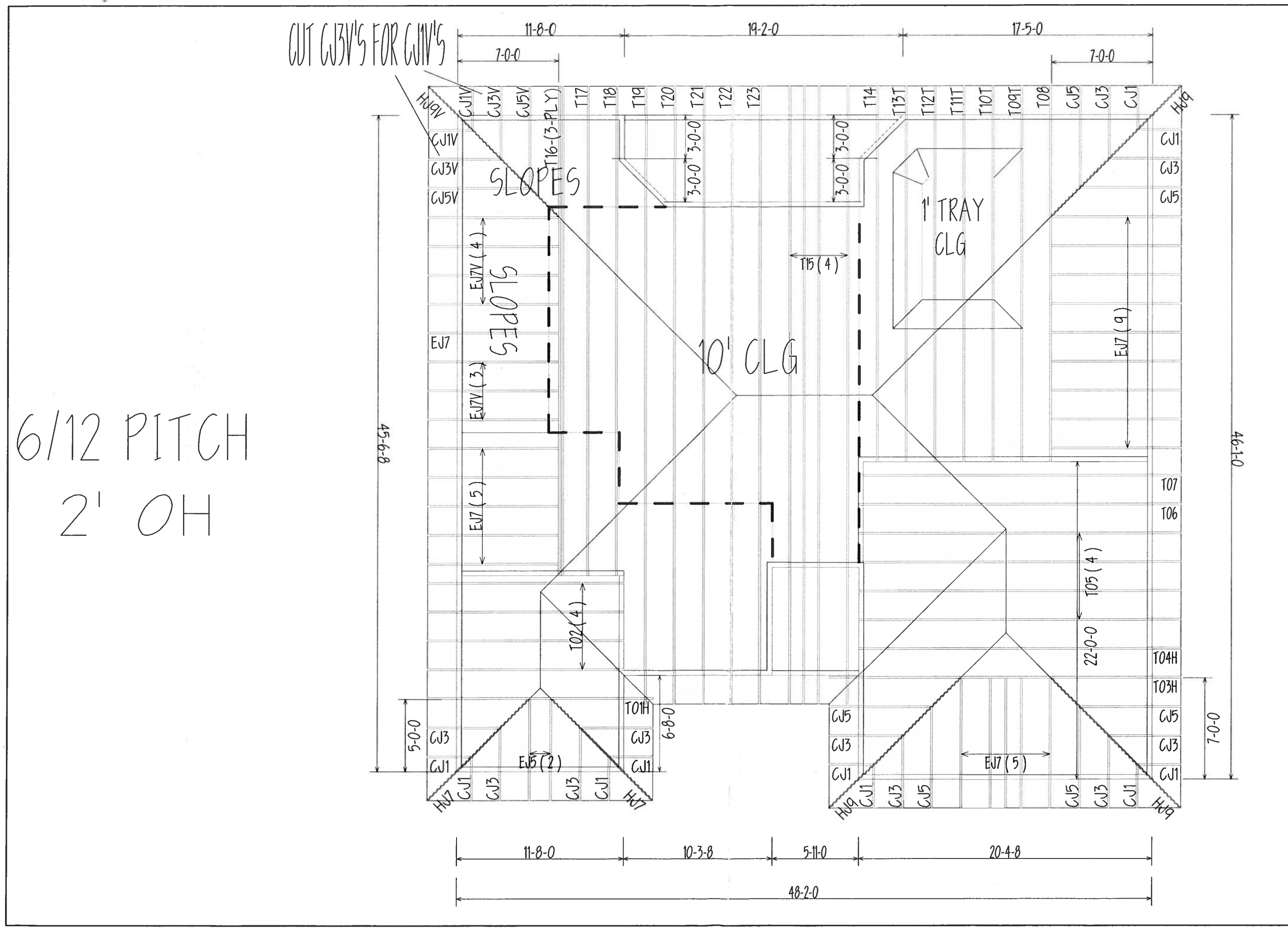

BEARING HEIGHT SCHEDULE

8'-0"

NOTES:

1.) REFER TO HIB 91 (RECOMMENDATIONS FOR HANDLING INSTALLATION AND TEMPORARY BRACING.) REFER TO ENGINEERED DRAWINGS FOR PERMANENT BRACING REQUIRED.

2.) ALL TRUSSES (INCLUDING TRUSSES UNDER VALLEY FRAMING) MUST BE COMPLETELY DECKED OR REFER TO DETAIL V105 FOR ALTERNATE BRACING REQUIREMENTS.

3.) ALL VALLEYS ARE TO BE CONVENTIONALLY FRAMED BY BUILDER.

4.) ALL TRUSSES ARE DESIGNED FOR 2' o.c. MAXIMUM SPACING, UNLESS OTHERWISE NOTED.

5.) ALL WALLS SHOWN ON PLACEMENT PLAN ARE CONSIDERED TO BE LOAD BEARING, UNLESS OTHERWISE NOTED.

6.) SY42 TRUSSES MUST BE INSTALLED WITH THE TOP BEING UP.

7.) ALL ROOF TRUSS HANGERS TO BE SIMPSON HU526 UNLESS OTHERWISE NOTED. ALL FLOOR TRUSS HANGERS TO BE SIMPSON THA422 UNLESS OTHERWISE NOTED.

8.) BEAM/HEADER/LINTEL (HDR) TO BE FURNISHED BY BUILDER.

SHOP DRAWING APPROVAL

THIS LAYOUT IS THE SOLE SOURCE FOR FABRICATION OF TRUSSES AND VOIDS ALL PREVIOUS ARCHITECTURAL OR OTHER TRUSS LAYOUTS. REVIEW AND APPROVAL OF THIS LAYOUT MUST BE RECEIVED BEFORE ANY TRUSSES WILL BE BUILT. VERIFY ALL CONDITIONS TO INSURE AGAINST CHANGES THAT WILL RESULT IN EXTRA CHARGES TO YOU.

Requested Delivery Date: _____

Approved by: _____ Date: _____

Builders FirstSource

Bunnell
PHONE: 904-437-3349 FAX: 904-437-3994

Jacksonville
PHONE: 904 772 6100 FAX: 904 772 1973

Lake City
PHONE: 904-755-6894 FAX: 904-755-7973

Sanford
PHONE: 407-322-0059 FAX: 407-322-5553

BUILDER:	CORNERSTONE
LEGAL ADDRESS:	LOT 98 EMERALD COVE
MODEL:	SAMUEL EC
REVISION:	
SCALE:	NTS
DATE:	8/31/06
DRAWN BY:	WWL
JOB #:	L209085

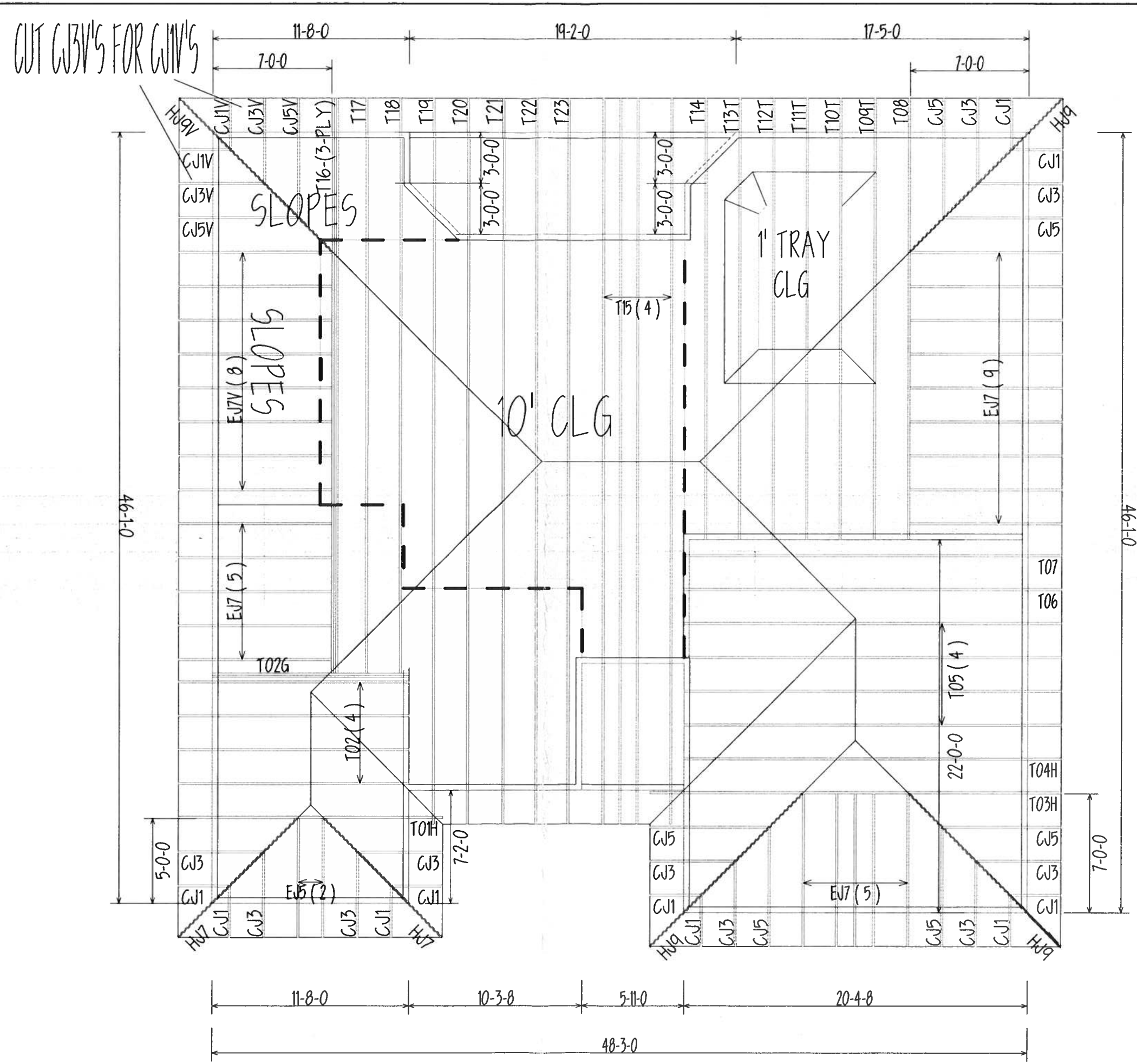

6/12 PITCH

2' OH

BEARING HEIGHT SCHEDULE

8'-0"

NOTES:

1) REFER TO HIB 91 (RECOMMENDATIONS FOR HANDLING INSTALLATION AND TEMPORARY BRACING) REFER TO ENGINEERED DRAWINGS FOR PERMANENT BRACING REQUIRED.

2) ALL TRUSSES (INCLUDING TRUSSES UNDER VALLEY FRAMING) MUST BE COMPLETELY DECKED OR REFER TO DETAIL V10S FOR ALTERNATE BRACING REQUIREMENTS.

3) ALL VALLEYS ARE TO BE CONVENTIONALLY FRAMED BY BUILDER.

4) ALL TRUSSES ARE DESIGNED FOR 2' o.c. MAXIMUM SPACING, UNLESS OTHERWISE NOTED.

5) ALL WALLS SHOWN ON PLACEMENT PLAN ARE CONSIDERED TO BE LOAD BEARING, UNLESS OTHERWISE NOTED.

6.) SY42 TRUSSES MUST BE INSTALLED WITH THE TOP BEING UP.

7.) ALL ROOF TRUSS HANGERS TO BE SIMPSON HUS26 UNLESS OTHERWISE NOTED. ALL FLOOR TRUSS HANGERS TO BE SIMPSON THA422 UNLESS OTHERWISE NOTED.

8.) BEAM/HEADER/LINTEL (HDR) TO BE FURNISHED BY BUILDER.

SHOP DRAWING APPROVAL

THIS LAYOUT IS THE SOLE SOURCE FOR FABRICATION OF TRUSSES AND VOIDS ALL PREVIOUS ARCHITECTURAL OR OTHER TRUSS LAYOUTS. REVIEW AND APPROVAL OF THIS LAYOUT MUST BE RECEIVED BEFORE ANY TRUSSES WILL BE BUILT. VERIFY ALL CONDITIONS TO INSURE AGAINST CHANGES THAT WILL RESULT IN EXTRA CHARGES TO YOU.

Requested Delivery Date: _____

Approved By: _____ Date: _____

Builders FirstSource

Bunnell
PHONE: 904-437-3349 FAX: 904-437-3994

Jacksonville
PHONE: 904 772 6100 FAX: 904 772 1973

Lake City
PHONE: 904-755-6894 FAX: 904-755-7973

Sanford
PHONE: 407-322-0059 FAX: 407-322-5553

BUILDER: CORNERSTONE		
LEGAL ADDRESS: LOT 98 EMERALD COVE		
MODEL: SAMUEL EC		REVISION: SCALE: NTS
DATE: 8/31/06	DRAWN BY: WWL	JOB #: L209085