BEG NE COR OF SE1/4 OF NW1/4, RU
W R/W OF SW NURSERY RD, SE ALONG
NW 486.74 FT TO SE R/W OF BRANFO

CREAMER LINDA M/BROWN AMY M
P O BOX 1625
LAKE CITY, FL 32056

**2025**

**15-4S-16-03015-000**

## COLUMBIA COUNTY PROPERTY



### BUILDING CHARACTERISTICS

| ELEMENT | CD | CONSTRUCTION |
|---|---|---|
| Exterior Wall | 19 | COMMON BRK 100 |
| Roof Structur | 03 | GABLE/HIP 100 |
| Roof Cover | 12 | MODULAR MT 100 |
| Interior Wall | 05 | DRYWALL 100 |
| Interior Floo | 14 | CARPET 90 |
| Interior Floo | 08 | SHT VINYL 10 |
| Air Condition | 03 | CENTRAL 100 |
| Heating Type | 04 | AIR DUCTED 100 |
| Bedrooms | | 3 100 |
| Bathrooms | | 1 100 |
| Frame | 01 | NONE 100 |
| Stories | 1. | 1. 100 |
| Architectual | 05 | CONV 100 |
| Units | | 0 100 |
| Condition Adj | 03 | 03 100 |
| Kitchen Adjus | 01 | 01 100 |
| Quality | 05 | 05 |
| DOR CODE | 0117 | SFRES/OFFICE |
| MAP NUM | | MKT AREA 06 |
| NEIGHBORHOOD/LOC | 15416.00 | 1.00/ |

| AREA TYPE | TOTAL GROSS AREA | PCT OF BASE | TOT ADJ AREA | SUBAREA MARKET VALUE |
|---|---|---|---|---|
| BAS | 1,189 | 100 | 1,189 | 95,594 |
| FCP | 396 | 25 | 99 | 7,959 |
| FOP | 80 | 30 | 24 | 1,930 |
| TOTALS | 1,665 | | 1,312 | 105,483 |

### MARKET ADJUSTMENTS

| TYPE | MDL | EFF. AREA | TOT ADJ PTS | EFF. BASE RATE | REPL. COST NEW | AYB | EYB | ECON | FNCT | | NORM | % COND |
|---|---|---|---|---|---|---|---|---|---|---|---|---|
| 0100 | 01 | 1,312 | 117.8000 | 123.69 | 162,281 | 1969 | 1969 | 0 | 0 | 0 | 35.00 | 65.00 |

1 SINGLE FAM – 0% - 0 Heated Area: 1189 HX Base Yr

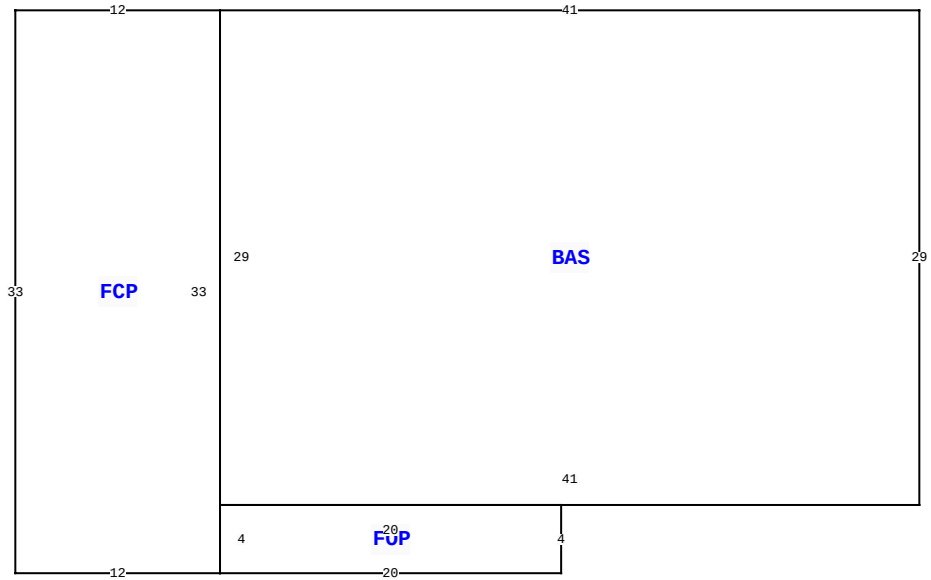


3309 SW STATE ROAD 247 , LAKE CITY

| | | | |
|---|---|---|---|
| BLD DATE | | LGL DATE | |
| XF DATE | | LAND DATE | |
| INC DATE | | AG DATE | |

### VALUATION SUMMARY

| | |
|---|---|
| VALUATION BY | STANDARD |
| Tax Group: 3 | Tax Dist: |
| BUILDING MARKET VALUE | 226,567 |
| TOTAL MARKET OB/XF VALUE | 25,659 |
| TOTAL LAND VALUE - MARKET | 26,000 |
| TOTAL MARKET VALUE | 278,226 |
| SOH/AGL Deduction | 0 |
| ASSESSED VALUE | 278,226 |
| TOTAL EXEMPTION VALUE | 0 |
| BASE TAXABLE VALUE | 278,226 |
| TOTAL JUST VALUE | 278,226 |
| NCON VALUE | 0 |
| INCOME VALUE | |
| PREVIOUS YEAR MKT VALUE | 278,226 |

| PERMIT NUM | DESCRIPTION | AMT | ISSUED |
|---|---|---|---|
| 35533 | MAINT/ALTR | 155 | 07/11/2017 |
| 23087 | ADDN COMM | 321 | 05/02/2005 |

### SALES DATA

| OFF RECORD Number | DATE | TYPE INST | Q U / | V I / | RSN CD | SALE PRICE |
|---|---|---|---|---|---|---|
| 1341/2454 | 8/02/2017 | PR | U | I | 11 | 0 |
| GRANTOR: AMY M BROWN AS PR FOR | | | | | | |
| GRANTEE: AMY BROWN, ANGELA A | | | | | | |
| 1327/1341 | 12/02/2016 | PR | U | I | 11 | 0 |
| GRANTOR: AMY M BROWN AS PR FOR | | | | | | |
| GRANTEE: AMY BROWN, ANGELA A | | | | | | |

### BUILDING NOTES

### BUILDING DIMENSIONS

BAS= W41 FCP= W12 S33 E12 N33$ S29 FOP= S4 E20 N4 W20$ E41 N29$.

### EXTRA FEATURES

| LN | OB/XF CODE | DESCRIPTION | BLD | CAP | L | W | UNITS | UT | Adj R | ADJ UNIT PRICE | ORIG COND | YEAR ON | YEAR ACTUAL | Q | % COND | OB/XF MKT VALUE | NOTES |
|---|---|---|---|---|---|---|---|---|---|---|---|---|---|---|---|---|---|
| 1 | 0166 | CONC,PAVMT | 0 | 0 | 0 | 0 | 1.00 | UT | 0.00 | 0.00 | 100 | 0 | 0 | 3 | 100 | 750 | |
| 2 | 0294 | SHED WOOD/ | 0 | 0 | 12 | 16 | 192.00 | UT | 7.50 | 7.50 | 70 | 2002 | 2002 | 3 | 70 | 1,008 | |
| 3 | 0040 | BARN,POLE | 0 | 0 | 48 | 36 | 1,728.00 | UT | 2.50 | 2.50 | 70 | 2002 | 2002 | 3 | 70 | 3,024 | |
| 4 | 0294 | SHED WOOD/ | 0 | 0 | 22 | 21 | 462.00 | UT | 7.50 | 7.50 | 50 | 2002 | 2002 | 3 | 50 | 1,733 | |
| 5 | 0294 | SHED WOOD/ | 0 | 0 | 22 | 24 | 528.00 | UT | 7.50 | 7.50 | 50 | 2002 | 2002 | 3 | 50 | 1,980 | |
| 6 | 0252 | LEAN-TO W/ | 0 | 0 | 10 | 14 | 140.00 | UT | 2.00 | 2.00 | 50 | 2002 | 2002 | 3 | 50 | 140 | |
| 7 | 0040 | BARN,POLE | 0 | 0 | 0 | 0 | 3,528.00 | UT | 3.00 | 3.00 | 100 | 2006 | 2006 | 3 | 100 | 10,584 | |
| 8 | 0140 | CLFENCE 6 | 0 | 0 | 0 | 0 | 980.00 | UT | 8.00 | 8.00 | 50 | 2006 | 2006 | 3 | 50 | 3,920 | |
| 9 | 0166 | CONC,PAVMT | 0 | 0 | 0 | 0 | 1,008.00 | UT | 2.50 | 2.50 | 100 | 2006 | 2006 | 3 | 100 | 2,520 | |

### LAND DESCRIPTION

TOTAL OB/XF 25,659

| LN | USE CODE | CLS | LAND USE DESCRIPTION | CAP | RD | LOC ZONE | FRONT | DEPTH | TOT LND UTS | UNIT TYPE | DT | DPTH FACT | % COND | TOT ADJ | UNIT PRICE | ADJ UNIT PRICE | LAND VALUE | OTHER ADJUSTMENTS AND NOTES | YEAR | DENSITY | DECL | FRZ | YR | CONSRV |
|---|---|---|---|---|---|---|---|---|---|---|---|---|---|---|---|---|---|---|---|---|---|---|---|---|
| 1 | 0111 | C | SFR/COMMERCI | 0 | | 00 | 0.00 | 0.00 | 3.25 | AC | | 1.00 | 1.00 | 1.00 | 8,000.00 | 8,000.00 | 26,000 | | | | | | | |

REVIEW DATE 04/25/2019 BY KR Total Acres: 3.25 Total Land Value: 26,000 Market: 0 Agricultural: 0 Common: 26,000 PRINTED 01/29/2025 BY SYS

BEG NE COR OF SE1/4 OF NW1/4, RU
W R/W OF SW NURSERY RD, SE ALONG
NW 486.74 FT TO SE R/W OF BRANFO

CREAMER LINDA M/BROWN AMY M
P O BOX 1625
LAKE CITY, FL 32056

**2025**

**15-4S-16-03015-000**

## BUILDING CHARACTERISTICS

| ELEMENT | CD | CONSTRUCTION |
|---|---|---|
| Exterior Wall | 25 | MOD METAL 100 |
| Roof Structur | 10 | STEEL FRME 100 |
| Roof Cover | 12 | MODULAR MT 100 |
| Interior Wall | 01 | MINIMUM 100 |
| Interior Floo | 03 | CONC FINSH 100 |
| Ceiling | 03 | PART.FIN. 100 |
| Air Condition | 01 | NONE 100 |
| Heating Type | 01 | NONE 100 |
| Fixtures | | 0 100 |
| Frame | 05 | STEEL 100 |
| Story Height | | 12 100 |
| RMS | | 9 100 |
| Stories | 1. | 1. 100 |
| Units | | 0 100 |
| Condition Adj | 03 | 03 100 |
| Quality | 05 | 05 |
| DOR CODE | 0117 | SFRES/OFFICE |
| MAP NUM | | MKT AREA 06 |
| NEIGHBORHOOD/LOC | 15416.00 | 1.00/ |

| AREA TYPE | TOTAL GROSS AREA | PCT OF BASE | TOT ADJ AREA | SUBAREA MARKET VALUE |
|---|---|---|---|---|
| AOF | 120 | 110 | 132 | 1,888 |
| AOF | 1,700 | 110 | 1,870 | 26,749 |
| AOF | 2,840 | 110 | 3,124 | 44,686 |
| BAS | 1,050 | 100 | 1,050 | 15,019 |
| BAS | 2,106 | 100 | 2,106 | 30,124 |
| CAN | 54 | 30 | 16 | 229 |
| CAN | 558 | 30 | 167 | 2,389 |
| TOTALS | 8,428 | | 8,465 | 121,084 |

## MARKET ADJUSTMENTS

| TYPE | MDL | EFF. AREA | TOT ADJ PTS | EFF. BASE RATE | REPL. COST NEW | AYB | EYB | ECON | FNCT | | NORM | % COND |
|---|---|---|---|---|---|---|---|---|---|---|---|---|
| 8700 | 04 | 8,465 | 66.2112 | 23.84 | 201,806 | 1979 | 1979 | 0 | 0 | 0 | 40.00 | 60.00 |

2 PREF M B A – 0% - 0 Heated Area: 7816 HX Base Yr

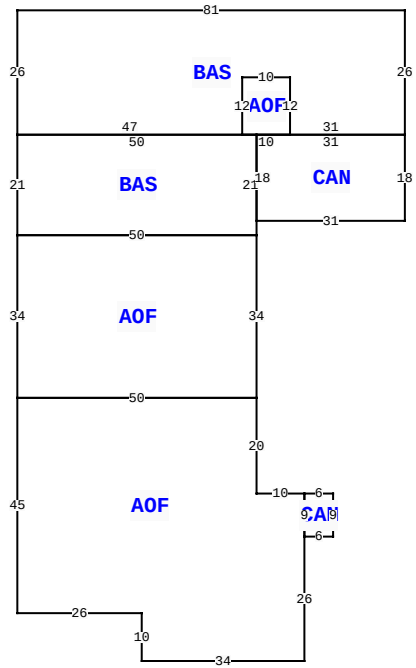


3309 SW STATE ROAD 247 , LAKE CITY

| | | | |
|---|---|---|---|
| BLD DATE | | LGL DATE | |
| XF DATE | | LAND DATE | |
| INC DATE | | AG DATE | |

## COLUMBIA COUNTY PROPERTY

PAGE 2 of 2 3

### VALUATION SUMMARY

| | |
|---|---|
| VALUATION BY | STANDARD |
| Tax Group: 3 | Tax Dist: |
| BUILDING MARKET VALUE | 226,567 |
| TOTAL MARKET OB/XF VALUE | 25,659 |
| TOTAL LAND VALUE - MARKET | 26,000 |
| TOTAL MARKET VALUE | 278,226 |
| SOH/AGL Deduction | 0 |
| ASSESSED VALUE | 278,226 |
| TOTAL EXEMPTION VALUE | 0 |
| BASE TAXABLE VALUE | 278,226 |
| TOTAL JUST VALUE | 278,226 |
| NCON VALUE | 0 |
| INCOME VALUE | |
| PREVIOUS YEAR MKT VALUE | 278,226 |

| PERMIT NUM | DESCRIPTION | AMT | ISSUED |
|---|---|---|---|
| | | | |

## SALES DATA

| OFF RECORD Number | DATE | TYPE INST | Q U | V I | RSN CD | SALE PRICE |
|---|---|---|---|---|---|---|
| 1341/2454 | 8/02/2017 | PR | U | I | 11 | 0 |
| GRANTOR: AMY M BROWN AS PR FOR | | | | | | |
| GRANTEE: AMY BROWN, ANGELA A | | | | | | |
| 1327/1341 | 12/02/2016 | PR | U | I | 11 | 0 |
| GRANTOR: AMY M BROWN AS PR FOR | | | | | | |
| GRANTEE: AMY BROWN, ANGELA A | | | | | | |

## BUILDING NOTES

## BUILDING DIMENSIONS

BAS= W81 S26 BAS= S21 AOF= S34 AOF= S45 E26 S10 E34 N26 CAN= E6 N9 W6 S9$ N9 W10 N20 W50$ E50 N34 W50$ E50 N21 W50$ E47 AOF= N12 E10 S12 W10$ E3 CAN= S18 E31 N18 W31$ E31 N26$.

## EXTRA FEATURES

| LN | OB/XF CODE | DESCRIPTION | BLD | CAP | L | W | UNITS | UT | Adj R | ADJ UNIT PRICE | ORIG COND | YEAR ON | YEAR ACTUAL | Q | % COND | OB/XF MKT VALUE | NOTES |
|---|---|---|---|---|---|---|---|---|---|---|---|---|---|---|---|---|---|

## LAND DESCRIPTION

TOTAL OB/XF 0

| LN | USE CODE | CLS | LAND USE DESCRIPTION | CAP | RD | LOC ZONE | FRONT | DEPTH | TOT LND UTS | UNIT TYPE | DT | DPTH FACT | % COND | TOT ADJ | UNIT PRICE | ADJ UNIT PRICE | LAND VALUE | OTHER ADJUSTMENTS AND NOTES | YEAR | DENSITY | DECL | FRZ | YR | CONSRV |
|---|---|---|---|---|---|---|---|---|---|---|---|---|---|---|---|---|---|---|---|---|---|---|---|---|

REVIEW DATE 04/25/2019 BY KR Total Acres: 3.25 Total Land Value: 26,000 Market: 0 Agricultural: 0 Common: 26,000 PRINTED 01/29/2025 BY SYS