COMPLETE STRUCTURAL CONSULTING
Indianapolis, Indiana | Washington, DC | Denver, Colorado | Gainesville, Florida
(888) 905-5541 | info@completestructural.com

**Current Date:** 9/22/2020 4:49 PM
**Units system:** English
**File name:** P:\20.553 Charles Button 63-70 (WWSB)\03 CALCULATIONS\RAM ELEMENTS\Button - Main Frame.retx\

# Analysis result

## Forces envelope

Note.- **lc** is the controlling load condition
Forces envelope for :

LC1=1.4DL+1.4SW
LC2=1.2DL+0.5BSN+1.6LLD+1.2SW
LC3=1.2DL+1.6LLD+0.5RLL+1.2SW
LC4=1.2DL+1.6BSN+0.5LLD+1.2SW
LC5=1.2DL+1.6BSN+0.5W0N+1.2SW
LC6=1.2DL+1.6BSN+0.5W0P+1.2SW
LC7=1.2DL+1.6BSN+0.5W180N+1.2SW
LC8=1.2DL+1.6BSN+0.5W180P+1.2SW
LC9=1.2DL+1.6BSN+0.5W270N+1.2SW
LC10=1.2DL+1.6BSN+0.5W270P+1.2SW
LC11=1.2DL+1.6BSN+0.5W90N+1.2SW
LC12=1.2DL+1.6BSN+0.5W90P+1.2SW
LC13=1.2DL+0.5LLD+1.6RLL+1.2SW
LC14=1.2DL+1.6RLL+0.5W0N+1.2SW
LC15=1.2DL+1.6RLL+0.5W0P+1.2SW
LC16=1.2DL+1.6RLL+0.5W180N+1.2SW
LC17=1.2DL+1.6RLL+0.5W180P+1.2SW
LC18=1.2DL+1.6RLL+0.5W270N+1.2SW
LC19=1.2DL+1.6RLL+0.5W270P+1.2SW
LC20=1.2DL+1.6RLL+0.5W90N+1.2SW
LC21=1.2DL+1.6RLL+0.5W90P+1.2SW
LC22=1.2DL+0.5LLD+1.6USL+1.2SW
LC23=1.2DL+1.6USL+0.5W0N+1.2SW
LC24=1.2DL+1.6USL+0.5W0P+1.2SW
LC25=1.2DL+1.6USL+0.5W180N+1.2SW
LC26=1.2DL+1.6USL+0.5W180P+1.2SW
LC27=1.2DL+1.6USL+0.5W270N+1.2SW
LC28=1.2DL+1.6USL+0.5W270P+1.2SW
LC29=1.2DL+1.6USL+0.5W90N+1.2SW
LC30=1.2DL+1.6USL+0.5W90P+1.2SW
LC31=1.2DL+0.5LLD+1.6USR+1.2SW
LC32=1.2DL+1.6USR+0.5W0N+1.2SW
LC33=1.2DL+1.6USR+0.5W0P+1.2SW
LC34=1.2DL+1.6USR+0.5W180N+1.2SW
LC35=1.2DL+1.6USR+0.5W180P+1.2SW
LC36=1.2DL+1.6USR+0.5W270N+1.2SW
LC37=1.2DL+1.6USR+0.5W270P+1.2SW
LC38=1.2DL+1.6USR+0.5W90N+1.2SW
LC39=1.2DL+1.6USR+0.5W90P+1.2SW
LC40=1.2DL+0.5BSN+0.5LLD+W0N+1.2SW
LC41=1.2DL+0.5BSN+0.5LLD+W0P+1.2SW
LC42=1.2DL+0.5BSN+0.5LLD+W180N+1.2SW
LC43=1.2DL+0.5BSN+0.5LLD+W180P+1.2SW
LC44=1.2DL+0.5BSN+0.5LLD+W270N+1.2SW
LC45=1.2DL+0.5BSN+0.5LLD+W270P+1.2SW
LC46=1.2DL+0.5BSN+0.5LLD+W90N+1.2SW

LC47=1.2DL+0.5BSN+0.5LLD+W90P+1.2SW
LC48=1.2DL+0.5LLD+0.5RLL+W0N+1.2SW
LC49=1.2DL+0.5LLD+0.5RLL+W0P+1.2SW
LC50=1.2DL+0.5LLD+0.5RLL+W180N+1.2SW
LC51=1.2DL+0.5LLD+0.5RLL+W180P+1.2SW
LC52=1.2DL+0.5LLD+0.5RLL+W270N+1.2SW
LC53=1.2DL+0.5LLD+0.5RLL+W270P+1.2SW
LC54=1.2DL+0.5LLD+0.5RLL+W90N+1.2SW
LC55=1.2DL+0.5LLD+0.5RLL+W90P+1.2SW
LC56=1.2DL+0.2BSN+EQX+0.5LLD+1.2SW
LC57=1.2DL+0.2BSN+EQZ+0.5LLD+1.2SW
LC58=W0N+0.9SW
LC59=W0P+0.9SW
LC60=W180N+0.9SW
LC61=W180P+0.9SW
LC62=W270N+0.9SW
LC63=W270P+0.9SW
LC64=W90N+0.9SW
LC65=W90P+0.9SW
LC66=EQX+0.9SW
LC67=EQZ+0.9SW
LC68=1.2DL+0.2BSN-EQX+0.5LLD+1.2SW
LC69=1.2DL+0.2BSN-EQZ+0.5LLD+1.2SW
LC70=-EQX+0.9SW
LC71=-EQZ+0.9SW

Max Moment at HSS Connection
Member 81: M = 32.29 kips-ft LC49

Max Axial Stress at HSS Connection
Member 82: V = 9.95 kips-ft LC49

MEMBER **81**

| Station | | Axial [Kip] | lc | Shear V2 [Kip] | lc | Shear V3 [Kip] | lc | Torsion [Kip*ft] | lc | M22 [Kip*ft] | lc | M33 [Kip*ft] | lc |
|---|---|---|---|---|---|---|---|---|---|---|---|---|---|
| 0% | Max | 5.70 | LC62 | 11.28 | LC61 | 0.00 | LC69 | 0.00 | LC1 | 0.00 | LC69 | 0.00 | LC6 |
| | Min | -9.90 | LC51 | -16.49 | LC49 | 0.00 | LC57 | 0.00 | LC1 | 0.00 | LC57 | 0.00 | LC43 |
| 50% | Max | 5.68 | LC62 | 11.28 | LC61 | 0.00 | LC1 | 0.00 | LC1 | 0.00 | LC57 | 11.02 | LC61 |
| | Min | -9.93 | LC51 | -16.49 | LC49 | 0.00 | LC1 | 0.00 | LC1 | 0.00 | LC69 | -16.15 | LC49 |
| 100% | Max | 5.66 | LC62 | 11.28 | LC61 | 0.00 | LC57 | 0.00 | LC1 | 0.00 | LC69 | 22.04 | LC61 |
| | Min | -9.95 | LC51 | -16.49 | LC49 | 0.00 | LC69 | 0.00 | LC1 | 0.00 | LC57 | -32.29 | LC49 |

MEMBER **62**

| Station | | Axial [Kip] | lc | Shear V2 [Kip] | lc | Shear V3 [Kip] | lc | Torsion [Kip*ft] | lc | M22 [Kip*ft] | lc | M33 [Kip*ft] | lc |
|---|---|---|---|---|---|---|---|---|---|---|---|---|---|
| 0% | Max | 5.70 | LC62 | 16.49 | LC51 | 0.00 | LC69 | 0.00 | LC1 | 0.00 | LC69 | 0.00 | LC59 |
| | Min | -9.89 | LC49 | -11.28 | LC59 | 0.00 | LC57 | 0.00 | LC1 | 0.00 | LC57 | 0.00 | LC51 |
| 50% | Max | 5.68 | LC62 | 16.49 | LC51 | 0.00 | LC1 | 0.00 | LC1 | 0.00 | LC57 | 16.15 | LC51 |
| | Min | -9.92 | LC49 | -11.28 | LC59 | 0.00 | LC1 | 0.00 | LC1 | 0.00 | LC69 | -11.02 | LC59 |
| 100% | Max | 5.66 | LC62 | 16.49 | LC51 | 0.00 | LC57 | 0.00 | LC1 | 0.00 | LC69 | 32.29 | LC51 |
| | Min | -9.95 | LC49 | -11.28 | LC59 | 0.00 | LC69 | 0.00 | LC1 | 0.00 | LC57 | -22.04 | LC59 |

Section Properties

## WWSB Knee Connection Check

Calculation follows AISC Design Guide 16 for Flush Moment End Plate Connections

User Input

### Connector and Chord Dimensions

ConnectorNumber := "CN-26 1/4"(5)6" — WWSB Connector Number

ConnectorType := $vlookup(ConnectorNumber, WWSBConnectors, 2)_1$ = "2L2x2x5/16"

$t_{conn} := vlookup(ConnectorType, ConnectorDatabase, 2)_1 \cdot in = 0.31 \cdot in$ — Connector Thickness

$l_{conn} := vlookup(ConnectorType, ConnectorDatabase, 3)_1 \cdot in = 2 \cdot in$ — Connector Leg Length

$A_{conn} := vlookup(ConnectorType, ConnectorDatabase, 4)_1 \cdot in^2 = 2.32 \cdot in^2$ — Connector Area

$Z_{xconn} := vlookup(ConnectorType, ConnectorDatabase, 5)_1 \cdot in^3 = 1.07 \cdot in^3$ — Connector Plastic Section Modulus

$L_{conn} := vlookup(ConnectorNumber, WWSBConnectors, 3)_1 \cdot in = 26.25 \cdot in$ — Length of Connection

$L_v := vlookup(ConnectorNumber, WWSBConnectors, 5)_1 \cdot in = 2.13 \cdot in$ — Vertical Edge Distance

$L_h := 0.9375in$ — Horizontal Edge Distance

ChordType := "2L2x2x 1/8 - W/ (1) 3/4 in Round Bar"

$t_{chord} := vlookup(ChordType, ChordDatabase, 2)_1 \cdot in = 0.13 \cdot in$ — Chord Thickness

$r_{chord} := 0.63in$ — Radius of Gyration

$l_{chord} := vlookup(ChordType, ChordDatabase, 3)_1 \cdot in = 2 \cdot in$ — Chord Length

$A_{chord} := vlookup(ChordType, ChordDatabase, 4)_1 \cdot in^2 = 1.41 \cdot in^2$ — Chord Area

$$y_{chord} := \frac{l_{chord}^2 + (l_{chord} - t_{chord}) \cdot t_{chord}}{2 \cdot (2 \cdot l_{chord} - t_{chord})} = 0.55 \cdot in$$ — Neutral Axis of Chord

$d := L_{conn} - 2 \cdot y_{chord} = 25.16 \cdot in$ — Effective Truss Depth

COLUMN := "HSS6X6X5/16"

$B := \text{vlookup}(COLUMN, AISC, 11)_1 \cdot in = 6 \cdot in$

$H := \text{vlookup}(COLUMN, AISC, 7)_1 \cdot in = 6 \cdot in$

$t_{nom} := \text{vlookup}(COLUMN, AISC, 19)_1 \cdot in = 0.313 \cdot in$

$t_{des} := \text{vlookup}(COLUMN, AISC, 20)_1 \cdot in = 0.291 \cdot in$

$w_{flat} := B - 2 \cdot 2.25 \cdot t_{nom} = 4.5938 \cdot in$

$S_x := \text{vlookup}(COLUMN, AISC, 36)_1 \cdot in^3 = 11.4 \cdot in^3$

$A_x := \text{vlookup}(COLUMN, AISC, 4)_1 \cdot in^2 = 6.43 \cdot in^2$

$\frac{B}{t_{des}} = 20.62$

$$Check := \begin{cases} \text{"SELECT THICKER COLUMN"} & \text{if } \frac{B}{t_{des}} > 40 \\ \text{"OK"} & \text{otherwise} \end{cases} = \text{"OK"}$$

Limit States Table K1.2A, Longitudinal Connections

$F_{yc} := 50ksi$

$F_{uc} := 62ksi$

$E := 29000ksi$

$D := \frac{5}{16} in$

Weld Throat

**Force Requirements**

$M_{req} := 32.30kip \cdot ft$ — Maximum HSS Column Moment from RAM output

$V_{req} := 10.00kip$ — Maximum HSS Column Axial from RAM output

**Design Parameters**

$F_y := 50ksi$ — Yield Strength

$F_u := 58ksi$ — Tensile Strength

$L_{cf} := 36 \cdot ft = 432 \cdot in$ — Horizontal Length of Beam

SeismicCat := "B" — Seismic Design Category

$N := vlookup(ConnectorNumber, WWSBConnectors, 4)_1 = 6$ — Number of Bolts

$y := 6$ — Roof Slope (y":12")

$h := L_v - y_{chord} = 1.58 \cdot in$ — Dist. of Bolt Group to Centroid of Truss Chord

User Input

Tensile and Axial Capacities of Bolts

## CHECK CONNECTION FOR REQUIRED FORCES

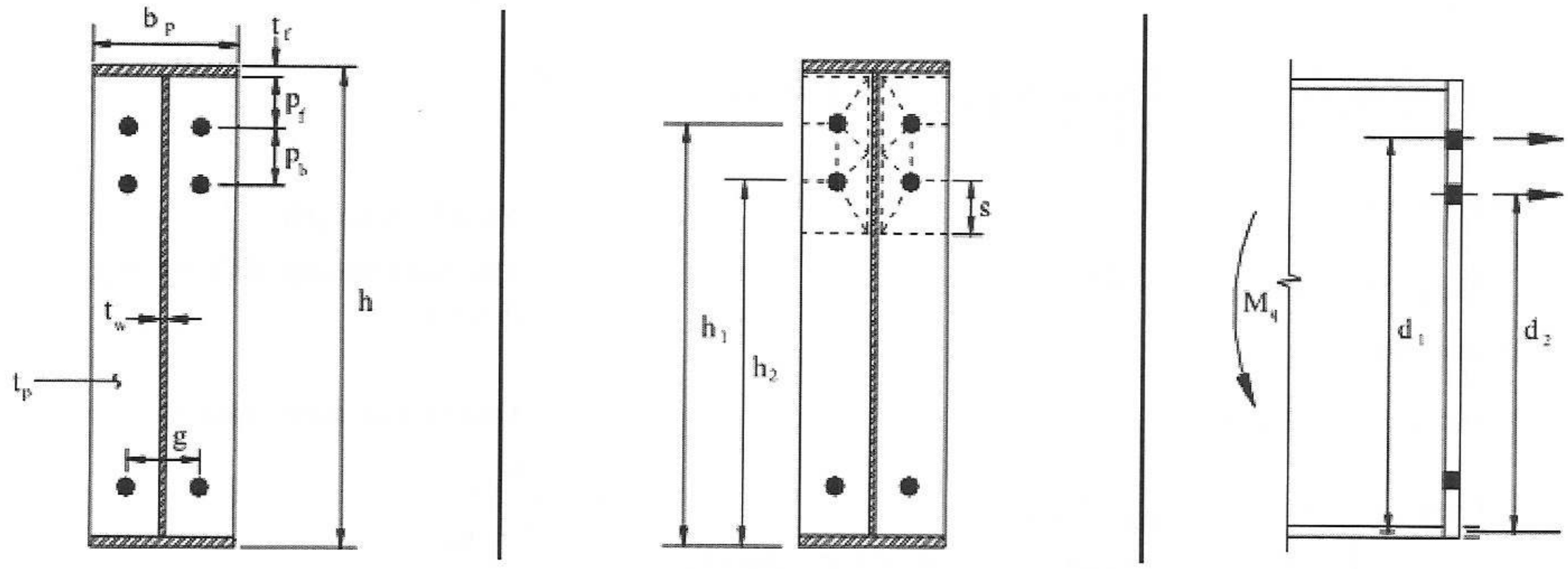


$h := L_{conn} = 26.25 \cdot in$ — Connection Length

$b_p := 2 \cdot l_{conn} = 4 \cdot in$ — Connection Width

$p_f := L_v - t_{chord} = 2 \cdot in$ — Distance from Edge of Angle to Center of First Bolt

$p_b := \left| \begin{array}{l} \left(\frac{h}{2} - L_v\right) \text{ if } N \le 6 \\ (2in) \text{ otherwise} \end{array} \right. = 11 \cdot in$ — Distance to Subsequent Bolt

$g := 2.125in$ — Bolt Gage

$s := \frac{1}{2} \cdot \sqrt{b_p \cdot g} = 1.46 \cdot in$ — Distance to Horizontal Yield Line

$h_1 := h - L_v = 24.13 \cdot in$ — Distance from Bottom to Top Bolt

$h_2 := h_1 - p_b = 13.13 \cdot in$ — Distance from Bottom to Subsequent Bolt

$øT_n := 20.7kip$ $\quad F_{nt} := 90ksi$ — Allowable Bolt Tension

$øV_n := 12.4kip$ $\quad F_{nv} := 54ksi$ — Allowable Bolt Shear

$d_b := \frac{5}{8} in$ $\quad A_b := \pi \cdot \frac{d_b^2}{4} = 0.31 \cdot in^2$ — Bolt Area

## 1. Check Angles for Required Moment

$M_{req} = 388 \cdot kip \cdot in$ Required Moment

$$Y := \frac{b_p}{2} \cdot \left[ h_1 \cdot \left( \frac{1}{p_f} \right) + h_2 \cdot \left( \frac{1}{s} \right) \right] + \frac{2}{g} \cdot \left[ h_1 \cdot \left( p_f + 0.75 p_b \right) + h_2 \cdot \left( s + 0.25 p_b \right) \right] + \frac{g}{2}$$

$Y = 328 \cdot in$ Yield Line Length

$M_{ang} := F_y \cdot t_{conn}^2 \cdot Y = 1601 \cdot kip \cdot in$ Moment Capacity of Connecting Angles

$ø := 0.90$

$ø \cdot M_{ang} = 1441 \cdot kip \cdot in$ Factored Moment Capacity

$$Check := \begin{cases} \text{"OK"} & \text{if } ø \cdot M_{ang} > M_{req} \\ \text{"PRYING ACTION MUST BE CHECKED"} & \text{otherwise} \end{cases}$$

$$SR := \frac{M_{req}}{ø \cdot M_{ang}} = 0.27$$

Check = "OK"

## 2. Check Angles for Required Shear

$V_{req} = 10 \cdot kip$ Required Shear

### Bolt Bearing

$R_n := N \min(1.2 \cdot L_v \cdot t_{conn} \cdot F_u, 2.4 \cdot d_b \cdot t_{conn} \cdot F_u) = 163.1 \cdot kip$ Bearing Strengh, Eq. J3-6a

$ø := 0.75$

$ø \cdot R_n = 122 \cdot kip$ Factored Strength

$Check := \begin{cases} \text{"OK"} & \text{if } ø \cdot R_n > V_{req} \\ \text{"NO GOOD"} & \text{otherwise} \end{cases}$ $SR := \frac{V_{req}}{ø \cdot R_n} = 0.08$

Check = "OK"

### Shear Yielding

$A_g := L_{conn} \cdot t_{conn} = 8.2 \cdot in^2$ Gross Shear Area

$R_n := 2 \cdot 0.6 \cdot A_g \cdot F_y = 492 \cdot kip$ Shear Yielding Strength, J4-3

$ø := 1.00$

$ø \cdot R_n = 492 \cdot kip$ Factored Strength

$Check := \begin{cases} \text{"OK"} & \text{if } ø \cdot R_n > V_{req} \\ \text{"NO GOOD"} & \text{otherwise} \end{cases}$ $SR := \frac{V_{req}}{ø \cdot R_n} = 0.02$

Check = "OK"

Shear Rupture

$d_h := d_b + \frac{1}{8}in = 0.75 \cdot in$ Hole Diameter

$L_e := L_{conn} - \frac{N}{2} \cdot d_h = 24 \cdot in$ Effective Connection Length

$A_{nv} := L_e \cdot t_{conn} = 7.5 \cdot in^2$ Net Shear Area

$R_n := 2 \cdot 0.6 \cdot A_{nv} \cdot F_u = 522 \cdot kip$ Shear Yielding Strength, J4-4

$ø := 0.75$

$ø \cdot R_n = 391 \cdot kip$ Factored Strength

$Check := \begin{cases} \text{"OK"} & \text{if } ø \cdot R_n > V_{req} \\ \text{"NO GOOD"} & \text{otherwise} \end{cases}$ $SR := \frac{V_{req}}{ø \cdot R_n} = 0.03$

Check = "OK"

Block Shear

$A_{nt} := t_{conn} \cdot \min\left(g - d_h, \frac{15}{16}in - d_h\right) = 0.059 \cdot in^2$ Net Tension Area

$A_{gv} := 2t_{conn} \cdot (L_{conn} - L_v) = 15.1 \cdot in^2$ Gross Shear Area

$A_{nv} := 2t_{conn} \cdot \left(L_{conn} - \frac{N}{2} \cdot d_h - L_v\right) = 13.7 \cdot in^2$ Net Shear Area

$U_{bs} := 1.0$ Uniform Stress

$R_n := \min(0.6 \cdot F_u \cdot A_{nv} + U_{bs} \cdot F_u \cdot A_{nt}, 0.6 \cdot F_y \cdot A_{gv} + U_{bs} \cdot F_u \cdot A_{nt})$

$R_n = 455.74 \cdot kip$ Block Shear Rupture Strength, J4-5

$ø := 0.75$

$ø \cdot R_n = 342 \cdot kip$ Factored Strength

$Check := \begin{cases} \text{"OK"} & \text{if } ø \cdot R_n > V_{req} \\ \text{"NO GOOD"} & \text{otherwise} \end{cases}$ $SR := \frac{V_{req}}{ø \cdot R_n} = 0.03$

Check = "OK"

## 3. Check Moment Capacity of Bolts

### Check Bolt Capacity with Prying Action Included

$P_t := A_b \cdot F_{nt} = 27.6 \cdot kip$ Bolt Strength

$$a_i := 3.682in \cdot \left(\frac{t_{conn}}{d_b}\right)^3 - 0.085in = 0.38 \cdot in$$

$$w' := \frac{b_p}{2} - d_h = 1.25 \cdot in$$

$$F'_i := \frac{t_{conn}^2 \cdot F_y \cdot \left(0.85\frac{b_p}{2} + 0.80w'\right) + \frac{\pi \cdot d_b^3 \cdot F_{nt}}{8}}{4p_f} = 2.73 \cdot kip$$

$$Q_{max} := \frac{w' \cdot t_{conn}^2}{4 \cdot a_i} \cdot \sqrt{F_y^2 - 3 \cdot \left(\frac{F'_i}{w' \cdot t_{conn}}\right)^2} = 3.95 \cdot kip$$

$d := h - y_{chord} = \begin{pmatrix} 23.6 \\ 12.6 \end{pmatrix} \cdot in$ Distance From Chord Centroid to Center of Bolt Groups

$ø := 0.75$

$M_n := 2 \cdot (P_t - Q_{max}) \cdot \sum d = 1711 \cdot kip \cdot in$ Moment Capacity of Bolts

$ø \cdot M_n = 1284 \cdot kip \cdot in$ Factored Moment Capacity

$$Check := \begin{cases} \text{"OK"} & \text{if } ø \cdot M_n > M_{req} \\ \text{"NO GOOD"} & \text{otherwise} \end{cases} \qquad SR := \frac{M_{req}}{ø \cdot M_n} = 0.3$$

Check = "OK"

## 4. Check Bolts in Shear

$V_{req} = 10 \cdot kip$ Reference RAM Analysis

$ø := 0.75$ Resistance Factor

$F_{nv} = 54 \cdot ksi$ Bolt Shear Strength, Per Unit Area

$V_n := A_b \cdot F_{nv} = 16.6 \cdot kip$ Bolt Shear

$V_n := N \cdot V_n = 99.4 \cdot kip$

$$f_{rv} := \frac{V_{req}}{V_n}\left(F_{nv}\right) = 5 \cdot ksi$$

$$Check := \begin{cases} \text{("OK")} & \text{if } \left(V_{req} \le ø \cdot V_n\right) \\ \text{"NO GOOD"} & \text{otherwise} \end{cases}$$

$$SR := \frac{V_{req}}{ø \cdot V_n} = 0.13$$

Check = "OK"

## 5. Check Combined Forces

$$F'_{nt} := 1.3F_{nt} - \frac{F_{nt}}{ø \cdot F_{nv}} \cdot f_{rv} = 104.9 \cdot ksi$$ AISC 14th; Equation J3-3b

$$M_n := 2 \cdot \left[\left(F'_{nt} \cdot A_b\right) - Q_{max}\right] \cdot \sum d = 2043 \cdot kip \cdot in$$ AISC 14th; Equation J3-2

$ø \cdot M_n = 1531.94 \cdot kip \cdot in$ $M_{req} = 387.6 \cdot kip \cdot in$

$$Check := \begin{cases} \text{("OK")} & \text{if } \left(ø \cdot M_n \ge M_{req}\right) \\ \text{"NO GOOD"} & \text{otherwise} \end{cases}$$

$$SR := \frac{M_{req}}{ø \cdot M_n} = 0.25$$

Check = "OK"

Tensile and Axial Capacities of Bolts

## 6. Check HSS Wall For Moment

$M_{req} = 32.3 \cdot kip \cdot ft$ — Maximum Moment in Column

$U := \frac{M_{req}}{F_{yc} \cdot S_x} = 0.68$ — AISC 15th; Equation K2-4;

$Q_f := 1.0 - 0.3 \cdot U \cdot (1 + U) = 0.66$ — AISC 15th; Equation K2-3

$c := 2 \cdot t_{conn} = 0.63 \cdot in$ — Distance over Which Load is Delivered

$M_n := \frac{t_{nom}^2 \cdot F_{yc}}{4} \cdot \left( \frac{2 \cdot B}{L_{conn}} + \frac{4 \cdot L_{conn}}{B - c} + 8 \cdot \sqrt{\frac{B}{B - c}} \right) L_{conn} \cdot Q_f = 49.92 \cdot kip \cdot ft$ — AISC 15th; Equation 9-32

$ø := 1.0$ — AISC 15th; Page 9-30

$ø \cdot M_n = 599.08 \cdot kip \cdot in$ $\quad M_{req} = 387.6 \cdot kip \cdot in$

$Check := \begin{cases} \text{("OK")} & \text{if } (ø \cdot M_n \geq M_{req}) \\ \text{"NO GOOD"} & \text{otherwise} \end{cases}$ $\quad SR := \frac{M_{req}}{ø \cdot M_n} = 0.65$

Check = "OK"

## 7. Check Weld to HSS Column

$I_w := \frac{L_{conn}^3}{6} = 3015 \cdot \frac{in^4}{in}$ — Moment of Inertia, Weld Group Fig. 8-6 AISC 14th Edition

$R_{req} := \frac{V_{req}}{2 \cdot L_{conn}} + M_{req} \cdot \frac{(L_{conn} \div 2)}{I_w} = 1.88 \cdot \frac{kip}{in}$ — Stress per Inch, Weld Group

$R_n := 0.6 \cdot 70ksi \cdot \left( \frac{\sqrt{2}}{2} \right) \cdot D = 9.28 \cdot \frac{kip}{in}$ — Strength of Weld, per Inch

$ø := 0.75$ — Safety Factor, Welds

$ø \cdot R_n = 6.96 \cdot \frac{kip}{in}$

$Check := \begin{cases} \text{("OK")} & \text{if } (ø \cdot R_n \geq R_{req}) \\ \text{"NO GOOD"} & \text{otherwise} \end{cases}$ $\quad SR := \frac{R_{req}}{ø \cdot R_n} = 0.27$

Check = "OK"

COMPLETE STRUCTURAL CONSULTING

Indianapolis, Indiana | Washington, DC | Denver, Colorado | Gainesville, Florida
(888) 905-5541 | info@completestructural.com

**Current Date:** 9/23/2020 8:50 AM
**Units system:** English
**File name:** P:\20.553 Charles Button 63-70 (WWSB)\03 CALCULATIONS\RAM ELEMENTS\Button - EWC W OH.retx\

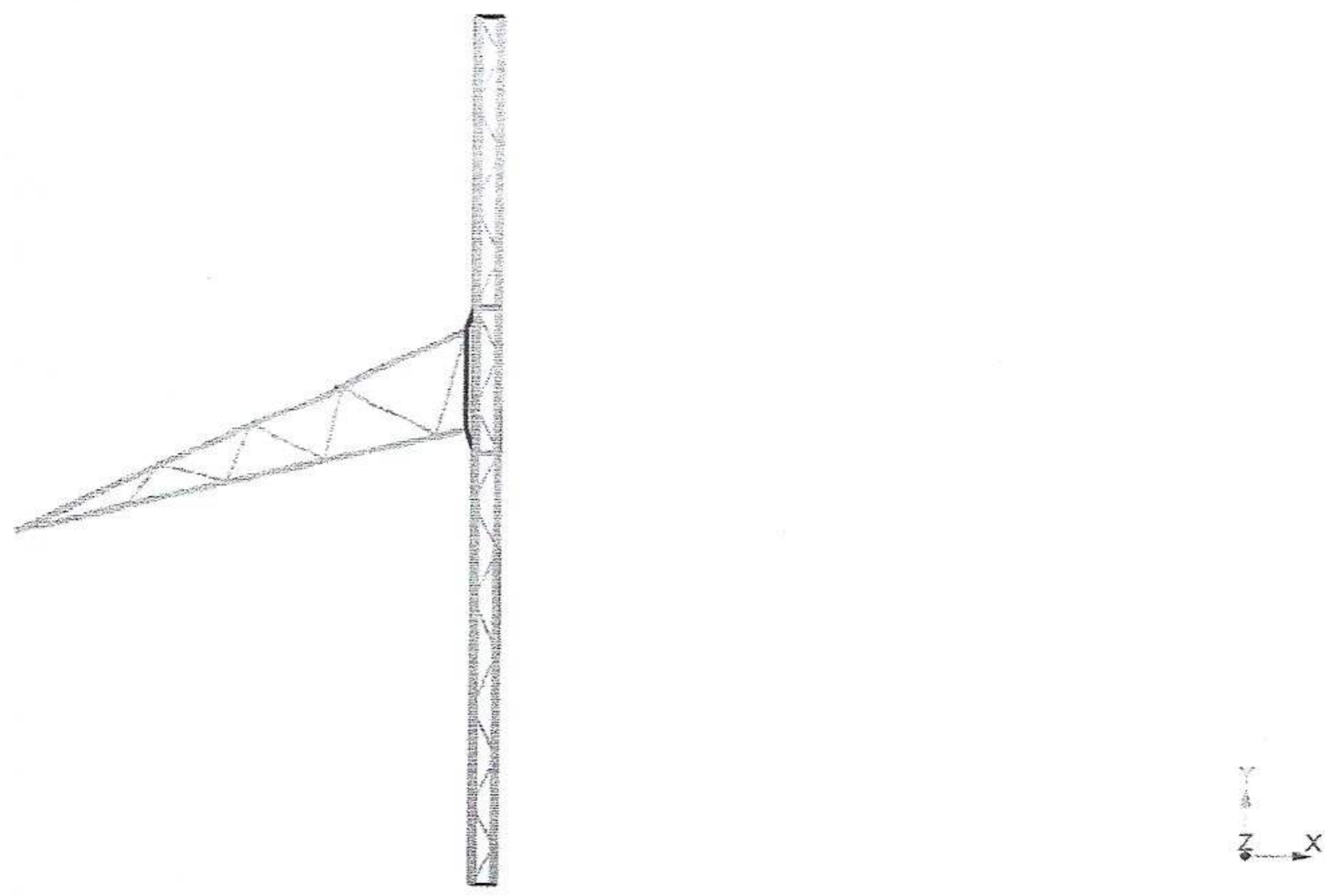

COMPLETE STRUCTURAL CONSULTING

Indianapolis, Indiana | Washington, DC | Denver, Colorado | Gainesville, Florida
(888) 905-5541 | info@completestructural.com

**Current Date:** 9/23/2020 8:51 AM
**Units system:** English
**File name:** P:\20.553 Charles Button 63-70 (WWSB)\03 CALCULATIONS\RAM ELEMENTS\Button - EWC W OH.retx\

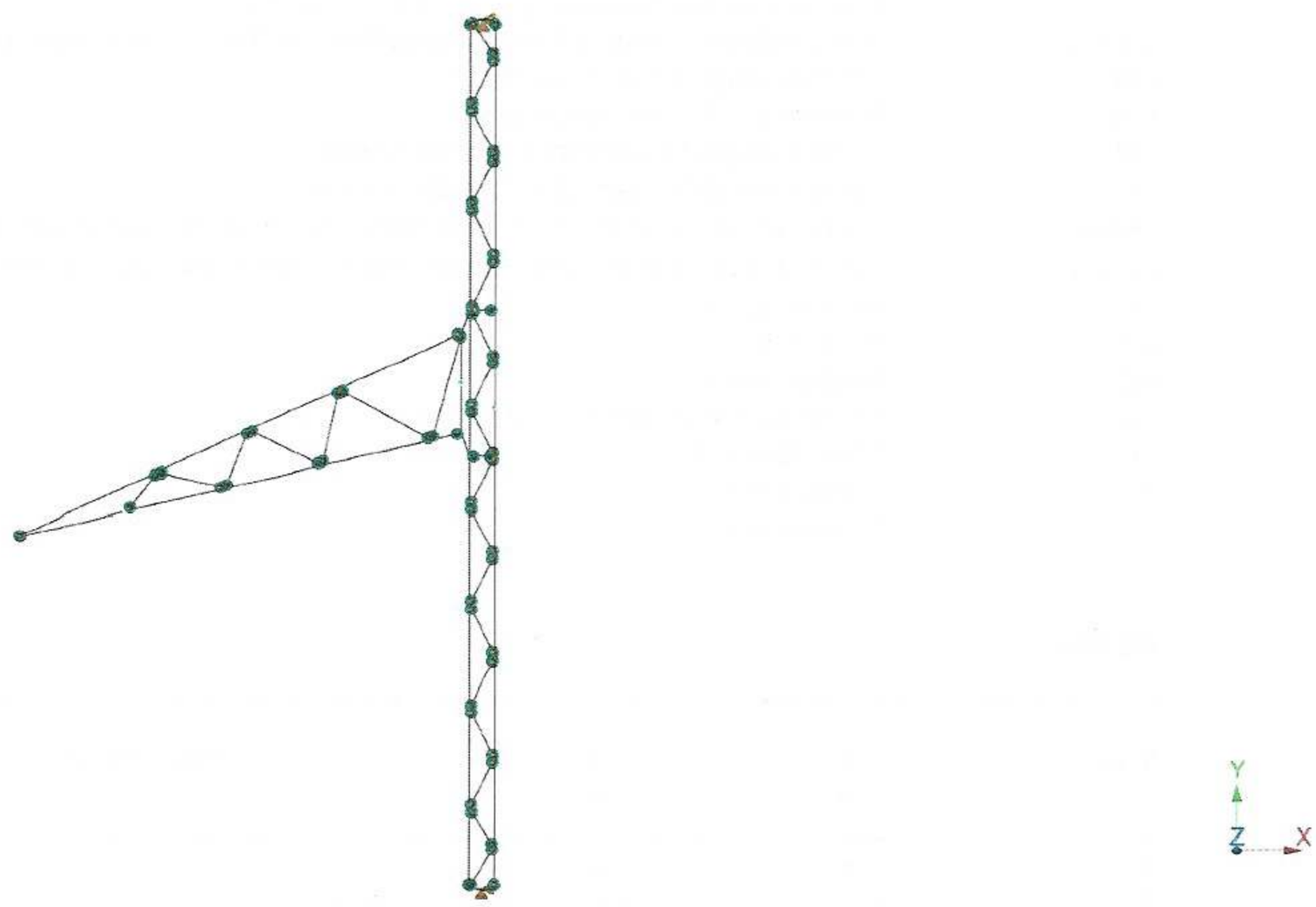

COMPLETE STRUCTURAL CONSULTING
Indianapolis, Indiana | Washington, DC | Denver, Colorado | Gainesville, Florida
(888) 905-5541 | info@completestructural.com

**Current Date:** 9/23/2020 8:51 AM
**Units system:** English
**File name:** P:\20.553 Charles Button 63-70 (WWSB)\03 CALCULATIONS\RAM ELEMENTS\Button - EWC W OH.retx\

# Geometry data

GLOSSARY

| | |
|---|---|
| Cb22, Cb33 | : Moment gradient coefficients |
| Cm22, Cm33 | : Coefficients applied to bending term in interaction formula |
| d0 | : Tapered member section depth at J end of member |
| DJX | : Rigid end offset distance measured from J node in axis X |
| DJY | : Rigid end offset distance measured from J node in axis Y |
| DJZ | : Rigid end offset distance measured from J node in axis Z |
| DKX | : Rigid end offset distance measured from K node in axis X |
| DKY | : Rigid end offset distance measured from K node in axis Y |
| DKZ | : Rigid end offset distance measured from K node in axis Z |
| dL | : Tapered member section depth at K end of member |
| Ig factor | : Inertia reduction factor (Effective Inertia/Gross Inertia) for reinforced concrete members |
| K22 | : Effective length factor about axis 2 |
| K33 | : Effective length factor about axis 3 |
| L22 | : Member length for calculation of axial capacity |
| L33 | : Member length for calculation of axial capacity |
| LB pos | : Lateral unbraced length of the compression flange in the positive side of local axis 2 |
| LB neg | : Lateral unbraced length of the compression flange in the negative side of local axis 2 |
| RX | : Rotation about X |
| RY | : Rotation about Y |
| RZ | : Rotation about Z |
| TO | : 1 = Tension only member 0 = Normal member |
| TX | : Translation in X |
| TY | : Translation in Y |
| TZ | : Translation in Z |

## Nodes

| Node | X [in] | Y [in] | Z [in] | Rigid Floor |
|---|---|---|---|---|
| 1 | 0.00 | 0.00 | 0.00 | 0 |
| 2 | 6.00 | 0.00 | 0.00 | 0 |
| 5 | 3.00 | 0.00 | 0.00 | 0 |
| 7 | 6.00 | 11.00 | 0.00 | 0 |
| 8 | 0.00 | 20.00 | 0.00 | 0 |
| 9 | 6.00 | 32.00 | 0.00 | 0 |
| 10 | 0.00 | 44.00 | 0.00 | 0 |
| 11 | 0.00 | 68.00 | 0.00 | 0 |
| 12 | 0.00 | 92.00 | 0.00 | 0 |
| 13 | 0.00 | 116.00 | 0.00 | 0 |
| 14 | 6.00 | 56.00 | 0.00 | 0 |
| 15 | 6.00 | 80.00 | 0.00 | 0 |
| 16 | 6.00 | 104.00 | 0.00 | 0 |
| 26 | 0.00 | 209.00 | 0.00 | 0 |
| 27 | 3.00 | 209.00 | 0.00 | 0 |
| 28 | 6.00 | 209.00 | 0.00 | 0 |

| | | | | |
|---|---|---|---|---|
| 29 | 0.00 | 140.00 | 0.00 | 0 |
| 30 | 6.00 | 128.00 | 0.00 | 0 |
| 31 | 6.00 | 152.00 | 0.00 | 0 |
| 32 | 0.00 | 164.00 | 0.00 | 0 |
| 33 | 0.00 | 188.00 | 0.00 | 0 |
| 36 | 6.00 | 176.00 | 0.00 | 0 |
| 37 | 6.00 | 200.00 | 0.00 | 0 |
| 38 | -2.00 | 109.75 | 0.00 | 0 |
| 39 | -109.00 | 84.50 | 0.00 | 0 |
| 40 | -2.00 | 134.50 | 0.00 | 0 |
| 41 | 6.00 | 116.00 | 0.00 | 0 |
| 42 | -2.00 | 122.125 | 0.00 | 0 |
| 43 | -9.1779 | 108.0562 | 0.00 | 0 |
| 44 | -31.4439 | 120.7412 | 0.00 | 0 |
| 45 | -53.1871 | 110.5808 | 0.00 | 0 |
| 46 | -74.9303 | 100.4204 | 0.00 | 0 |
| 47 | -35.4561 | 101.855 | 0.00 | 0 |
| 48 | -58.8145 | 96.3428 | 0.00 | 0 |
| 49 | -82.1729 | 90.8307 | 0.00 | 0 |
| 50 | 6.00 | 140.00 | 0.00 | 0 |
| 51 | 0.00 | 104.00 | 0.00 | 0 |

## Restraints

| Node | TX | TY | TZ | RX | RY | RZ |
|---|---|---|---|---|---|---|
| 5 | 1 | 1 | 1 | 0 | 0 | 0 |
| 27 | 1 | 1 | 1 | 0 | 0 | 0 |

## Members

| Member | NJ | NK | Description | Section | Material | d0 [in] | dL [in] | Ig factor |
|---|---|---|---|---|---|---|---|---|
| 1 | 1 | 5 | Base | Base Plate | A36 (weightless) | 0.00 | 0.00 | 0.00 |
| 3 | 5 | 2 | Base | Base Plate | A36 (weightless) | 0.00 | 0.00 | 0.00 |
| 7 | 7 | 2 | Chords | 2L 2x2x3/16 | A572 Gr50 | 0.00 | 0.00 | 0.00 |
| 8 | 8 | 1 | Chords | 2L 2x2x1/4 | A572 Gr50 | 0.00 | 0.00 | 0.00 |
| 9 | 9 | 7 | Chords | 2L 2x2x3/16 | A572 Gr50 | 0.00 | 0.00 | 0.00 |
| 12 | 13 | 16 | Web Rods | 10 - (1) 5/8 RB | A572 Gr50 | 0.00 | 0.00 | 0.00 |
| 13 | 12 | 15 | Web Rods | 10 - (1) 5/8 RB | A572 Gr50 | 0.00 | 0.00 | 0.00 |
| 14 | 11 | 14 | Web Rods | 12 - (2) 5/8 RB | A572 Gr50 | 0.00 | 0.00 | 0.00 |
| 15 | 10 | 9 | Web Rods | 12 - (2) 5/8 RB | A572 Gr50 | 0.00 | 0.00 | 0.00 |
| 16 | 8 | 7 | Web Rods | 10 - (1) 5/8 RB | A572 Gr50 | 0.00 | 0.00 | 0.00 |
| 17 | 8 | 9 | Web Rods | 10 - (1) 5/8 RB | A572 Gr50 | 0.00 | 0.00 | 0.00 |
| 18 | 10 | 14 | Web Rods | 10 - (1) 5/8 RB | A572 Gr50 | 0.00 | 0.00 | 0.00 |
| 19 | 11 | 15 | Web Rods | 10 - (1) 5/8 RB | A572 Gr50 | 0.00 | 0.00 | 0.00 |
| 20 | 12 | 16 | Web Rods | 10 - (1) 5/8 RB | A572 Gr50 | 0.00 | 0.00 | 0.00 |
| 26 | 16 | 15 | Chords | 2L2x2x 3/16 - W/ (2) 5/... | A572 Gr50 | 0.00 | 0.00 | 0.00 |
| 27 | 13 | 51 | Chords | 2L 2x2x1/4 | A572 Gr50 | 0.00 | 0.00 | 0.00 |
| 28 | 15 | 14 | Chords | 2L2x2x 3/16 - W/ (1) 5/... | A572 Gr50 | 0.00 | 0.00 | 0.00 |
| 29 | 12 | 11 | Chords | 2L 2x2x1/4 | A572 Gr50 | 0.00 | 0.00 | 0.00 |
| 30 | 14 | 9 | Chords | 2L 2x2x3/16 | A572 Gr50 | 0.00 | 0.00 | 0.00 |

| | | | | | | | | |
|---|---|---|---|---|---|---|---|---|
| 31 | 11 | 10 | Chords | 2L 2x2x1/4 | A572 Gr50 | 0.00 | 0.00 | 0.00 |
| 32 | 10 | 8 | Chords | 2L 2x2x1/4 | A572 Gr50 | 0.00 | 0.00 | 0.00 |
| 33 | 1 | 7 | Web Rods | 10 - (1) 5/8 RB | A572 Gr50 | 0.00 | 0.00 | 0.00 |
| 58 | 26 | 27 | base plate | Base Plate | A36 (weightless) | 0.00 | 0.00 | 0.00 |
| 59 | 27 | 28 | base plate | Base Plate | A36 (weightless) | 0.00 | 0.00 | 0.00 |
| 75 | 13 | 29 | Chords | 2L 2x2x1/4 | A572 Gr50 | 0.00 | 0.00 | 0.00 |
| 77 | 30 | 41 | Chords | 2L 2x2x3/16 | A572 Gr50 | 0.00 | 0.00 | 0.00 |
| 78 | 31 | 50 | Chords | 2L 2x2x3/16 | A572 Gr50 | 0.00 | 0.00 | 0.00 |
| 79 | 13 | 30 | Web Rods | 12 - (2) 5/8 RB | A572 Gr50 | 0.00 | 0.00 | 0.00 |
| 80 | 30 | 29 | Web Rods | 10 - (1) 5/8 RB | A572 Gr50 | 0.00 | 0.00 | 0.00 |
| 81 | 29 | 31 | Web Rods | 10 - (1) 5/8 RB | A572 Gr50 | 0.00 | 0.00 | 0.00 |
| 83 | 26 | 37 | Web Rods | 10 - (1) 5/8 RB | A572 Gr50 | 0.00 | 0.00 | 0.00 |
| 84 | 33 | 36 | Web Rods | 10 - (1) 5/8 RB | A572 Gr50 | 0.00 | 0.00 | 0.00 |
| 85 | 32 | 36 | Web Rods | 10 - (1) 5/8 RB | A572 Gr50 | 0.00 | 0.00 | 0.00 |
| 86 | 33 | 37 | Web Rods | 10 - (1) 5/8 RB | A572 Gr50 | 0.00 | 0.00 | 0.00 |
| 88 | 28 | 37 | Chords | 2L 2x2x3/16 | A572 Gr50 | 0.00 | 0.00 | 0.00 |
| 90 | 37 | 36 | Chords | 2L 2x2x3/16 | A572 Gr50 | 0.00 | 0.00 | 0.00 |
| 91 | 26 | 33 | Chords | 2L 2x2x1/4 | A572 Gr50 | 0.00 | 0.00 | 0.00 |
| 92 | 33 | 32 | Chords | 2L 2x2x1/4 | A572 Gr50 | 0.00 | 0.00 | 0.00 |
| 99 | 32 | 31 | Web Rods | 10 - (1) 5/8 RB | A572 Gr50 | 0.00 | 0.00 | 0.00 |
| 100 | 36 | 31 | Chords | 2L 2x2x3/16 | A572 Gr50 | 0.00 | 0.00 | 0.00 |
| 101 | 32 | 29 | Chords | 2L 2x2x1/4 | A572 Gr50 | 0.00 | 0.00 | 0.00 |
| 102 | 39 | 49 | Chords | 2L 1.5x1.5x1/8 | A572 Gr50 | 0.00 | 0.00 | 0.00 |
| 103 | 38 | 42 | Rigid Link | Rigid Link | A36 (weightless) | 0.00 | 0.00 | 0.00 |
| 104 | 39 | 46 | Chords | 2L 1.5x1.5x1/8 | A572 Gr50 | 0.00 | 0.00 | 0.00 |
| 105 | 41 | 16 | Chords | 2L2x2x 3/16 - W/ (1) 5/... | A572 Gr50 | 0.00 | 0.00 | 0.00 |
| 107 | 42 | 40 | Rigid Link | Rigid Link | A36 (weightless) | 0.00 | 0.00 | 0.00 |
| 109 | 43 | 38 | Chords | 2L 1.5x1.5x1/8 | A572 Gr50 | 0.00 | 0.00 | 0.00 |
| 110 | 44 | 40 | Chords | 2L 1.5x1.5x1/8 | A572 Gr50 | 0.00 | 0.00 | 0.00 |
| 111 | 45 | 44 | Chords | 2L 1.5x1.5x1/8 | A572 Gr50 | 0.00 | 0.00 | 0.00 |
| 112 | 46 | 45 | Chords | 2L 1.5x1.5x1/8 | A572 Gr50 | 0.00 | 0.00 | 0.00 |
| 113 | 47 | 43 | Chords | 2L 1.5x1.5x1/8 | A572 Gr50 | 0.00 | 0.00 | 0.00 |
| 114 | 48 | 47 | Chords | 2L 1.5x1.5x1/8 | A572 Gr50 | 0.00 | 0.00 | 0.00 |
| 115 | 49 | 48 | Chords | 2L 1.5x1.5x1/8 | A572 Gr50 | 0.00 | 0.00 | 0.00 |
| 116 | 40 | 43 | Web Rods | 11 - (1) 3/4 RB | A572 Gr50 | 0.00 | 0.00 | 0.00 |
| 117 | 43 | 44 | Web Rods | 11 - (1) 3/4 RB | A572 Gr50 | 0.00 | 0.00 | 0.00 |
| 118 | 44 | 47 | Web Rods | 11 - (1) 3/4 RB | A572 Gr50 | 0.00 | 0.00 | 0.00 |
| 119 | 47 | 45 | Web Rods | 11 - (1) 3/4 RB | A572 Gr50 | 0.00 | 0.00 | 0.00 |
| 120 | 45 | 48 | Web Rods | 11 - (1) 3/4 RB | A572 Gr50 | 0.00 | 0.00 | 0.00 |
| 121 | 48 | 46 | Web Rods | 11 - (1) 3/4 RB | A572 Gr50 | 0.00 | 0.00 | 0.00 |
| 122 | 46 | 49 | Web Rods | 11 - (1) 3/4 RB | A572 Gr50 | 0.00 | 0.00 | 0.00 |
| 123 | 50 | 30 | Chords | 2L 2x2x3/16 | A572 Gr50 | 0.00 | 0.00 | 0.00 |
| 124 | 29 | 50 | extra web | 2L 1.5x1.5x1/8 | A572 Gr50 | 0.00 | 0.00 | 0.00 |
| 125 | 29 | 40 | Rigid Link | Rigid Link | A36 (weightless) | 0.00 | 0.00 | 0.00 |
| 126 | 51 | 12 | Chords | 2L2x2x 1/4 - W/ (2) 5/8 i... | A572 Gr50 | 0.00 | 0.00 | 0.00 |
| 127 | 16 | 51 | extra web | 2L 1.5x1.5x1/8 | A572 Gr50 | 0.00 | 0.00 | 0.00 |
| 128 | 38 | 51 | Rigid Link | Rigid Link | A36 (weightless) | 0.00 | 0.00 | 0.00 |

**Orientation of local axes**

| Member | Rotation [Deg] | Axes23 | NX | NY | NZ |
|---|---|---|---|---|---|
| 8 | 180.00 | 0 | 0.00 | 0.00 | 0.00 |
| 27 | 180.00 | 0 | 0.00 | 0.00 | 0.00 |
| 29 | 180.00 | 0 | 0.00 | 0.00 | 0.00 |
| 31 | 180.00 | 0 | 0.00 | 0.00 | 0.00 |
| 32 | 180.00 | 0 | 0.00 | 0.00 | 0.00 |
| 91 | 180.00 | 0 | 0.00 | 0.00 | 0.00 |
| 92 | 180.00 | 0 | 0.00 | 0.00 | 0.00 |
| 101 | 180.00 | 0 | 0.00 | 0.00 | 0.00 |
| 126 | 180.00 | 0 | 0.00 | 0.00 | 0.00 |

## Hinges

| | Node-J | | | | Node-K | | | | | | |
|---|---|---|---|---|---|---|---|---|---|---|---|
| Member | M33 | M22 | V3 | V2 | M33 | M22 | V3 | V2 | TOR | AXL | Axial rigidity |
| 7 | 0 | 0 | 0 | 0 | 1 | 1 | 0 | 0 | 0 | 0 | Full |
| 8 | 0 | 0 | 0 | 0 | 1 | 1 | 0 | 0 | 0 | 0 | Full |
| 12 | 1 | 1 | 0 | 0 | 1 | 1 | 0 | 0 | 0 | 0 | Full |
| 13 | 1 | 1 | 0 | 0 | 1 | 1 | 0 | 0 | 0 | 0 | Full |
| 14 | 1 | 1 | 0 | 0 | 1 | 1 | 0 | 0 | 0 | 0 | Full |
| 15 | 1 | 1 | 0 | 0 | 1 | 1 | 0 | 0 | 0 | 0 | Full |
| 16 | 1 | 1 | 0 | 0 | 1 | 1 | 0 | 0 | 0 | 0 | Full |
| 17 | 1 | 1 | 0 | 0 | 1 | 1 | 0 | 0 | 0 | 0 | Full |
| 18 | 1 | 1 | 0 | 0 | 1 | 1 | 0 | 0 | 0 | 0 | Full |
| 19 | 1 | 1 | 0 | 0 | 1 | 1 | 0 | 0 | 0 | 0 | Full |
| 20 | 1 | 1 | 0 | 0 | 1 | 1 | 0 | 0 | 0 | 0 | Full |
| 33 | 1 | 1 | 0 | 0 | 1 | 1 | 0 | 0 | 0 | 0 | Full |
| 79 | 1 | 1 | 0 | 0 | 1 | 1 | 0 | 0 | 0 | 0 | Full |
| 80 | 1 | 1 | 0 | 0 | 1 | 1 | 0 | 0 | 0 | 0 | Full |
| 81 | 1 | 1 | 0 | 0 | 1 | 1 | 0 | 0 | 0 | 0 | Full |
| 83 | 1 | 1 | 0 | 0 | 1 | 1 | 0 | 0 | 0 | 0 | Full |
| 84 | 1 | 1 | 0 | 0 | 1 | 1 | 0 | 0 | 0 | 0 | Full |
| 85 | 1 | 1 | 0 | 0 | 1 | 1 | 0 | 0 | 0 | 0 | Full |
| 86 | 1 | 1 | 0 | 0 | 1 | 1 | 0 | 0 | 0 | 0 | Full |
| 88 | 1 | 1 | 0 | 0 | 0 | 0 | 0 | 0 | 0 | 0 | Full |
| 91 | 1 | 1 | 0 | 0 | 0 | 0 | 0 | 0 | 0 | 0 | Full |
| 99 | 1 | 1 | 0 | 0 | 1 | 1 | 0 | 0 | 0 | 0 | Full |
| 102 | 1 | 1 | 0 | 0 | 0 | 0 | 0 | 0 | 0 | 0 | Full |
| 104 | 1 | 1 | 0 | 0 | 0 | 0 | 0 | 0 | 0 | 0 | Full |
| 109 | 0 | 0 | 0 | 0 | 1 | 1 | 0 | 0 | 0 | 0 | Full |
| 110 | 0 | 0 | 0 | 0 | 1 | 1 | 0 | 0 | 0 | 0 | Full |
| 116 | 1 | 1 | 0 | 0 | 1 | 1 | 0 | 0 | 0 | 0 | Full |
| 117 | 1 | 1 | 0 | 0 | 1 | 1 | 0 | 0 | 0 | 0 | Full |
| 118 | 1 | 1 | 0 | 0 | 1 | 1 | 0 | 0 | 0 | 0 | Full |
| 119 | 1 | 1 | 0 | 0 | 1 | 1 | 0 | 0 | 0 | 0 | Full |
| 120 | 1 | 1 | 0 | 0 | 1 | 1 | 0 | 0 | 0 | 0 | Full |
| 121 | 1 | 1 | 0 | 0 | 1 | 1 | 0 | 0 | 0 | 0 | Full |
| 122 | 1 | 1 | 0 | 0 | 1 | 1 | 0 | 0 | 0 | 0 | Full |
| 124 | 1 | 1 | 0 | 0 | 1 | 1 | 0 | 0 | 0 | 0 | Full |
| 127 | 1 | 1 | 0 | 0 | 1 | 1 | 0 | 0 | 0 | 0 | Full |

COMPLETE STRUCTURAL CONSULTING

Indianapolis, Indiana | Washington, DC | Denver, Colorado | Gainesville, Florida
(888) 905-5541 | info@completestructural.com

**Current Date:** 9/23/2020 8:51 AM
**Units system:** English
**File name:** P:\20.553 Charles Button 63-70 (WWSB)\03 CALCULATIONS\RAM ELEMENTS\Button - EWC W OH.retx\

# Steel Code Check

**Report: Summary - Group by section**

**Load conditions to be included in design :**

LC1=1.4DL
LC2=0.9DL+WL0
LC3=0.9DL+WL90
LC4=0.9DL+WL180
LC5=0.9DL+WL270

| Description | Section | Member | Ctrl Eq. | Ratio | Status | Reference |
|---|---|---|---|---|---|---|
| Chords | 2L 1.5x1.5x1/8 | 113 | LC5 at 0.00% | 0.44 | OK | Eq. H2-1 |
| | 2L 2x2x1/4 | 29 | LC4 at 100.00% | 0.84 | OK | Eq. H2-1 |
| | 2L 2x2x3/16 | 77 | LC3 at 100.00% | 0.92 | OK | Eq. H2-1 |
| | 2L2x2x 1/4 - W/ (2) 5/8 in R... | 126 | LC4 at 0.00% | 0.99 | OK | Eq. H2-1 |
| | 2L2x2x 3/16 - W/ (1) 5/8 in ... | 105 | LC4 at 100.00% | 0.94 | OK | Eq. H2-1 |
| | 2L2x2x 3/16 - W/ (2) 5/8 in ... | 26 | LC4 at 0.00% | 0.94 | OK | Eq. H2-1 |
| extra web | 2L 1.5x1.5x1/8 | 127 | LC4 at 0.00% | 0.30 | OK | Eq. H2-1 |
| Web Rods | 10 - (1) 5/8 RB | 16 | LC4 at 0.00% | 0.94 | OK | Eq. H2-1 |
| | 11 - (1) 3/4 RB | 117 | LC5 at 0.00% | 0.45 | OK | Eq. H2-1 |
| | 12 - (2) 5/8 RB | 79 | LC4 at 0.00% | 0.62 | OK | Eq. H2-1 |

COMPLETE STRUCTURAL CONSULTING
Indianapolis, Indiana | Washington, DC | Denver, Colorado | Gainesville, Florida
(888) 905-5541 | info@completestructural.com

**Current Date:** 9/23/2020 8:53 AM
**Units system:** English
**File name:** P:\20.553 Charles Button 63-70 (WWSB)\03 CALCULATIONS\RAM ELEMENTS\Button - EWC W OH.retx\
**Load condition:** DL=Dead Load

Concentrated - Nodes

**Dead Load**

DL = 5 PSF + Steel Self Weight

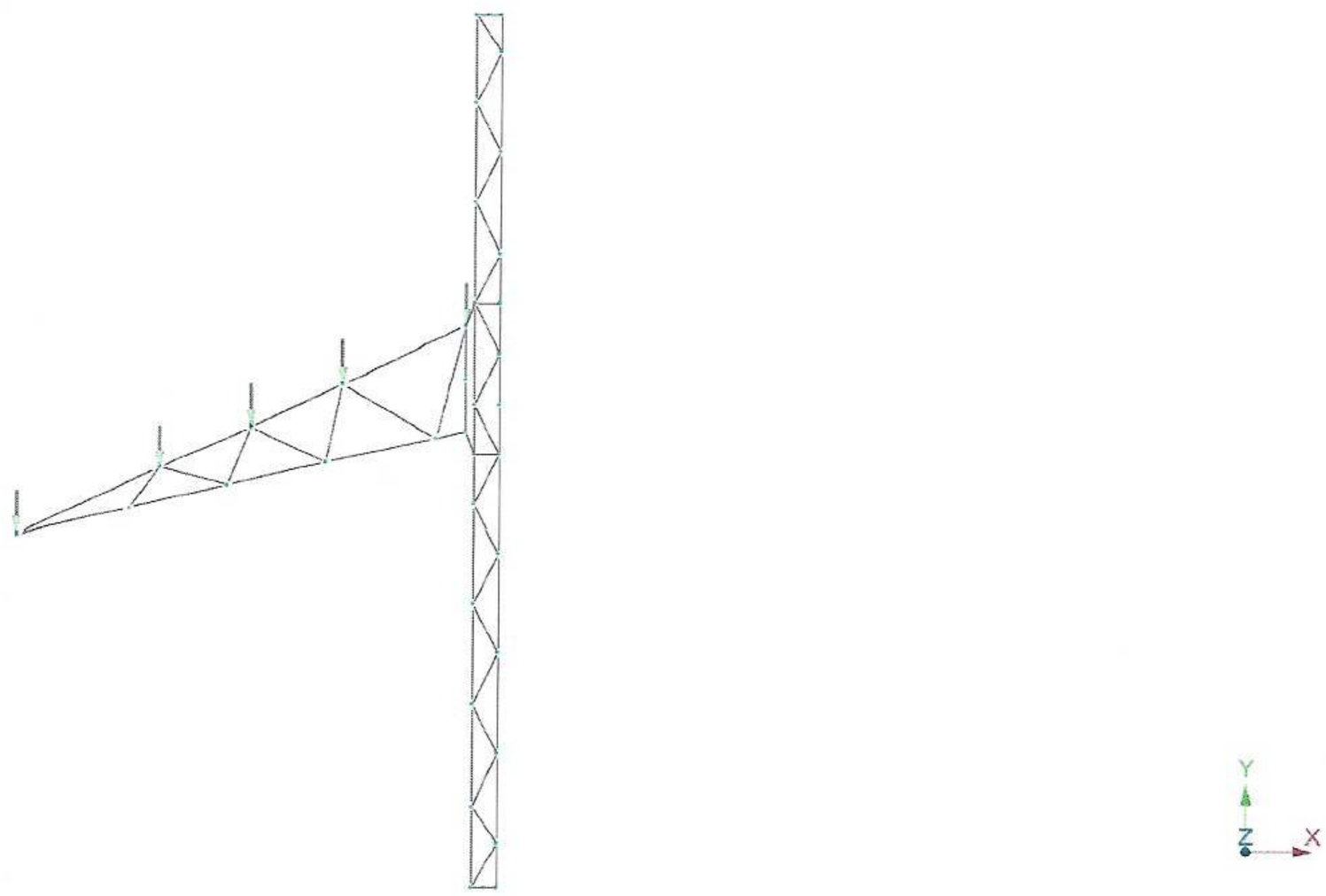

COMPLETE STRUCTURAL CONSULTING

Indianapolis, Indiana | Washington, DC | Denver, Colorado | Gainesville, Florida
(888) 905-5541 | info@completestructural.com

**Current Date:** 9/23/2020 8:53 AM
**Units system:** English
**File name:** P:\20.553 Charles Button 63-70 (WWSB)\03 CALCULATIONS\RAM ELEMENTS\Button - EWC W OH.retx\
**Load condition:** WL0=Wind Load 0 deg

Concentrated - Nodes

Wind Load Case 1
See pages 13-17 of load development for applied point loads

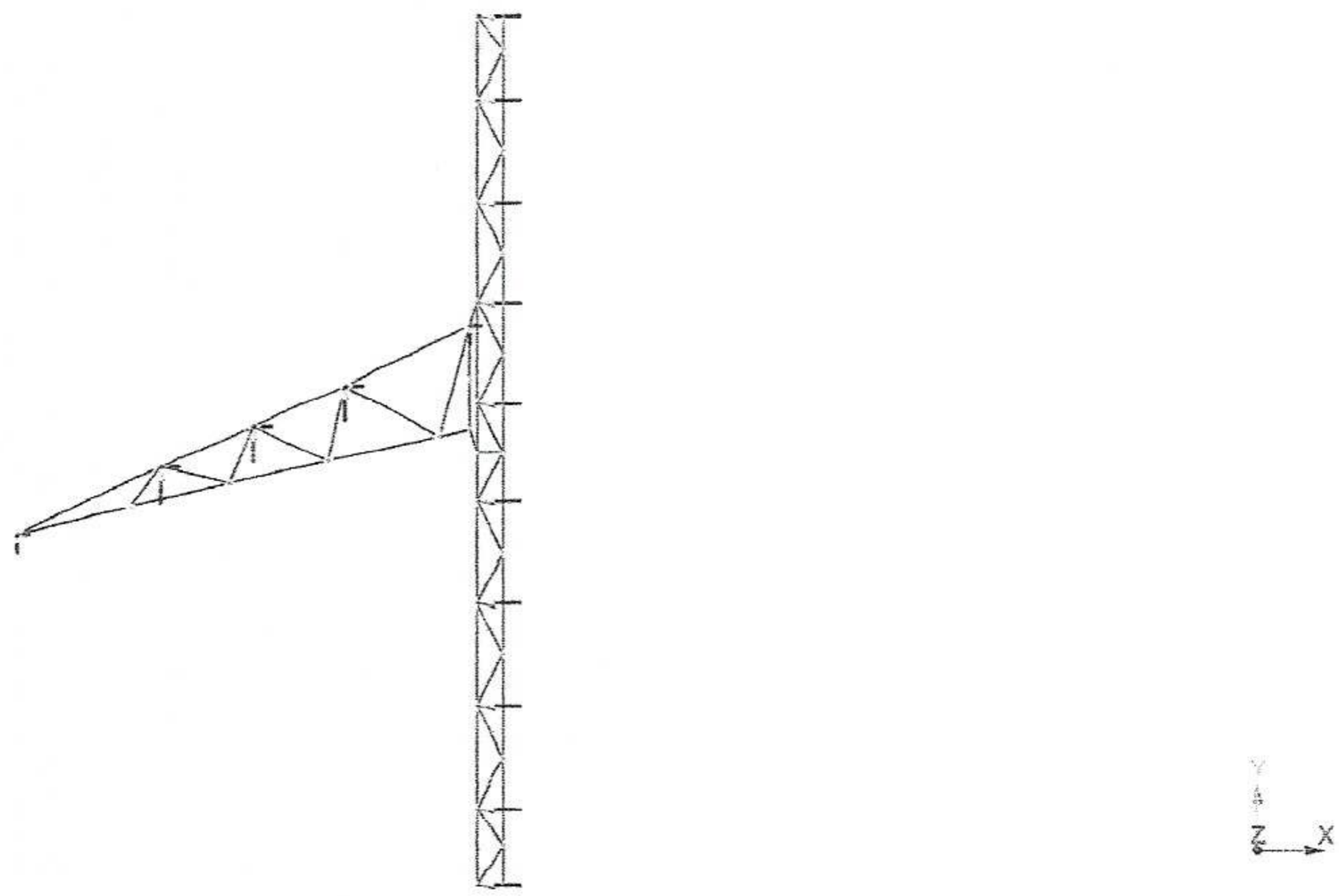

COMPLETE STRUCTURAL CONSULTING
Indianapolis, Indiana | Washington, DC | Denver, Colorado | Gainesville, Florida
(888) 905-5541 | info@completestructural.com

**Current Date:** 9/23/2020 8:53 AM
**Units system:** English
**File name:** P:\20.553 Charles Button 63-70 (WWSB)\03 CALCULATIONS\RAM ELEMENTS\Button - EWC W OH.retx\
**Load condition:** WL90=Wind Load 90 deg

Concentrated - Nodes

Wind Load Case 2
See pages 13-17 of load development for applied point loads

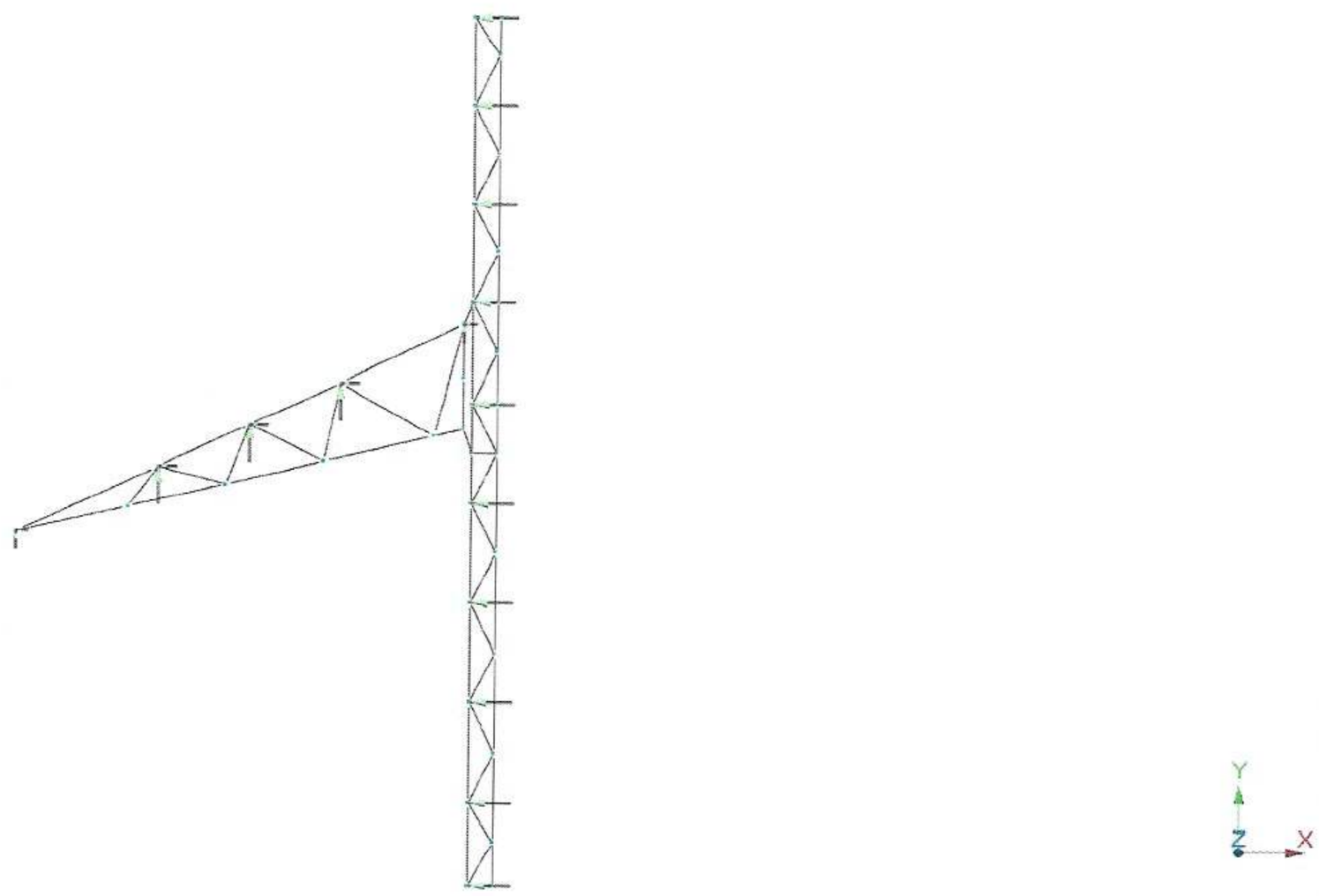

COMPLETE STRUCTURAL CONSULTING
Indianapolis, Indiana | Washington, DC | Denver, Colorado | Gainesville, Florida
(888) 905-5541 | info@completestructural.com

**Current Date:** 9/23/2020 8:53 AM
**Units system:** English
**File name:** P:\20.553 Charles Button 63-70 (WWSB)\03 CALCULATIONS\RAM ELEMENTS\Button - EWC W OH.retx\
**Load condition:** WL180=Wind Load 180 deg

Concentrated - Nodes

Wind Load Case 3
See pages 13-17 of load development for applied point loads

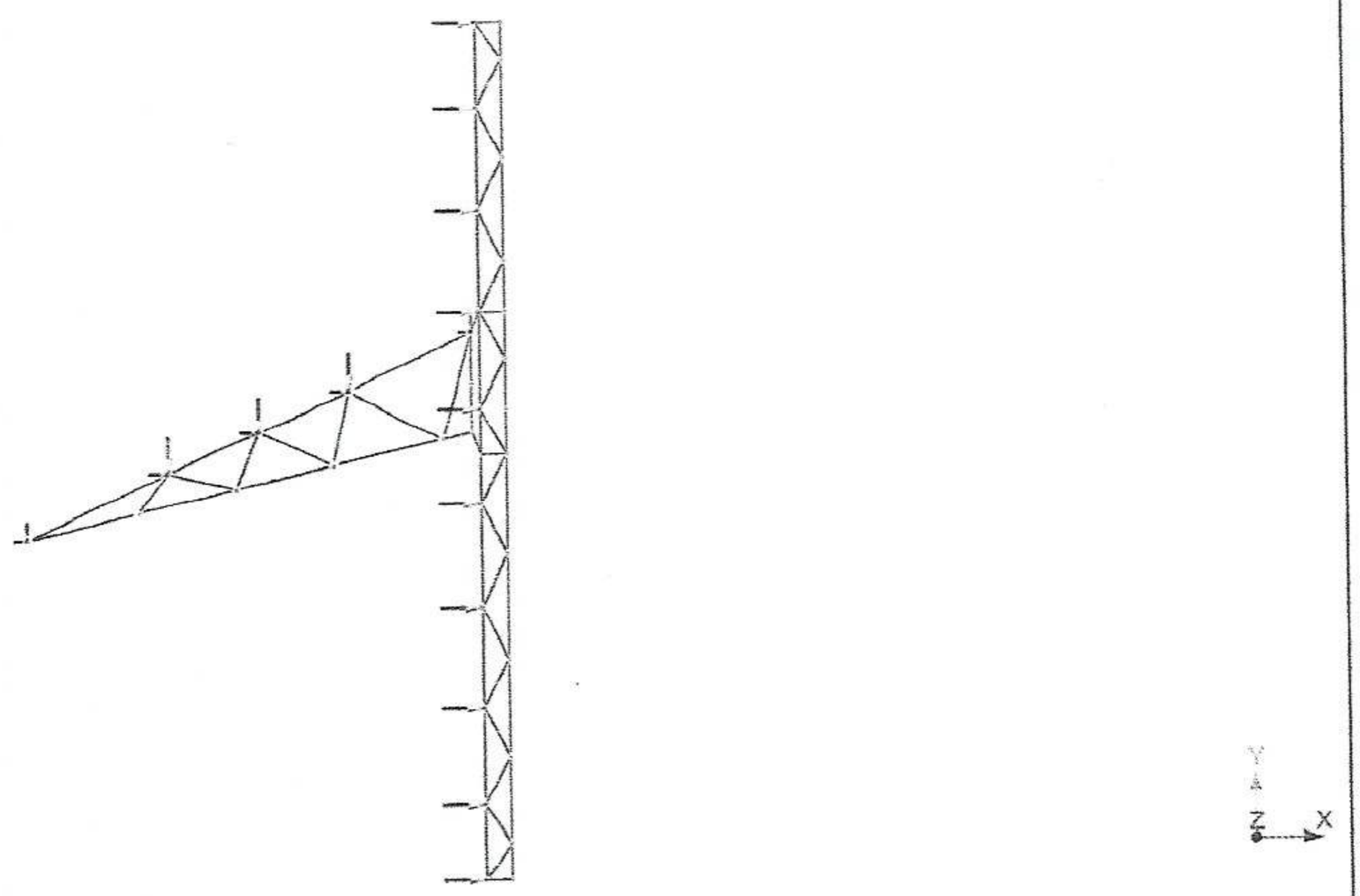

COMPLETE STRUCTURAL CONSULTING

Indianapolis, Indiana | Washington, DC | Denver, Colorado | Gainesville, Florida
(888) 905-5541 | info@completestructural.com

**Current Date:** 9/23/2020 8:54 AM
**Units system:** English
**File name:** P:\20.553 Charles Button 63-70 (WWSB)\03 CALCULATIONS\RAM ELEMENTS\Button - EWC W OH.retx\
**Load condition:** WL270=Wind Load 270 deg

Concentrated - Nodes
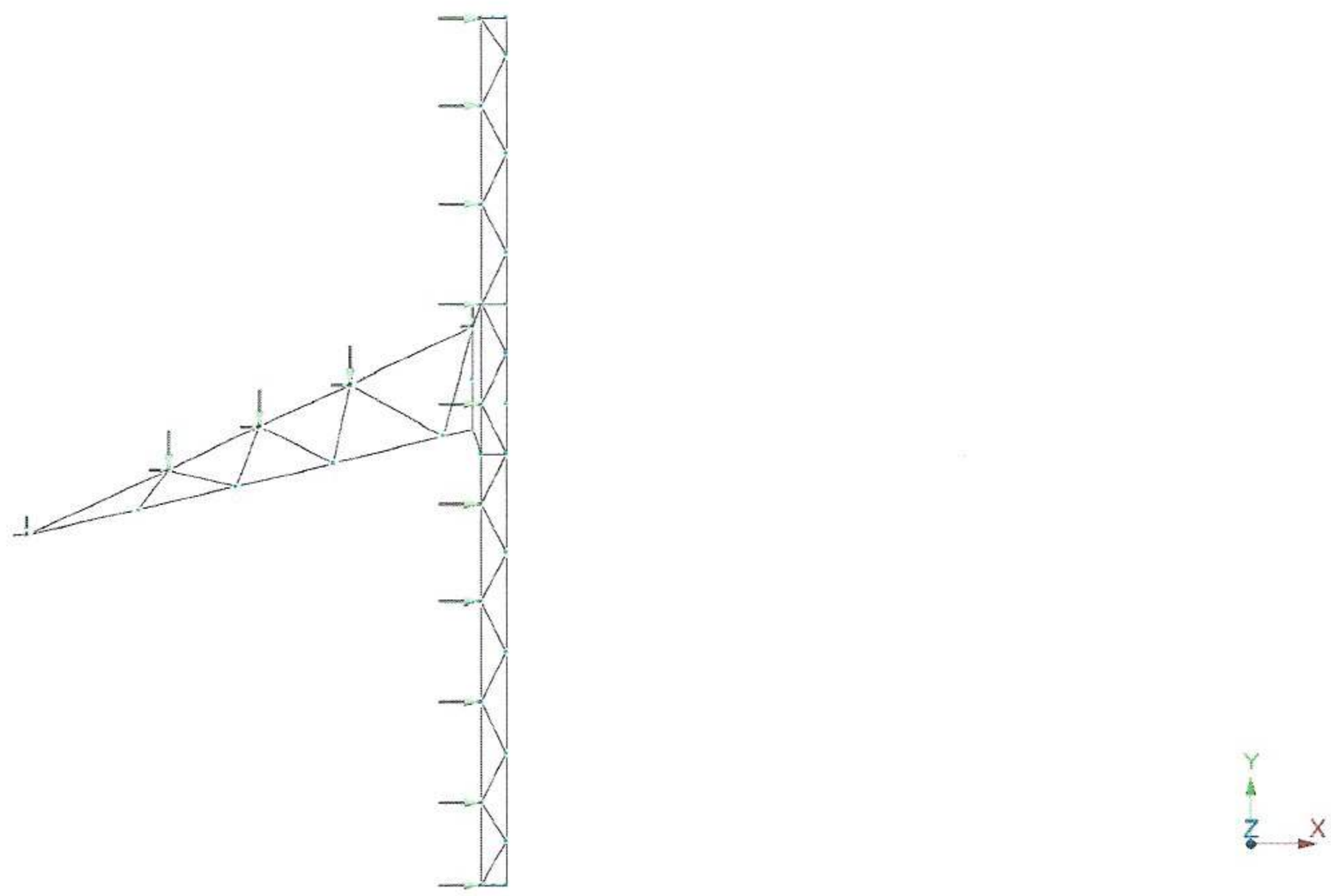
Wind Load Case 4
See pages 13-17 of load development for applied point loads