DATE 01/17/2008

Columbia County Building Permit

This Permit Must Be Prominently Posted on Premises During Construction

PERMIT
000026631

APPLICANT JOANNE T. PERRY PHONE 365.8765

ADDRESS 1003 SE CR 252 LAKE CITY FL 32025

OWNER LARRY PERRY,SR. & JOANNE PRRRY PHONE 386.365.0940

ADDRESS 1003 SE CR 252 LAKE CITY FL 32025

CONTRACTOR LARRY PERRY,SR. PHONE 386.365.8765

LOCATION OF PROPERTY 441-S TO C-252,TL GO 9/10 OF A MILE AND THE PROPERTY IS ON THE L.

TYPE DEVELOPMENT SFD/UTILITY ESTIMATED COST OF CONSTRUCTION 127200.00

HEATED FLOOR AREA 1904.00 TOTAL AREA 2544.00 HEIGHT 26.00 STORIES 1

FOUNDATION CONC WALLS WOOD/FRAME ROOF PITCH 6'12 FLOOR CONC

LAND USE & ZONING RSF-2 MAX. HEIGHT 35

Minimum Set Back Requirments: STREET-FRONT 25.00 REAR 15.00 SIDE 10.00

NO. EX.D.U. 0 FLOOD ZONE X DEVELOPMENT PERMIT NO.

PARCEL ID 16-4S-17-08380-011 SUBDIVISION

LOT BLOCK PHASE UNIT TOTAL ACRES 1.27

Culvert Permit No.	Culvert Waiver	Contractor's License Number	Applicant/Owner/Contractor	
EXISTING	07-0851-N	BLK	JTH	N
Driveway Connection	Septic Tank Number	LU & Zoning checked by	Approved for Issuance	New Resident

COMMENTS: FLOOR ONE FOOT ABOVE THE ROAD.

Check # or Cash 4035

FOR BUILDING & ZONING DEPARTMENT ONLY

(footer/Slab)

Temporary Power _____ date/app. by Foundation _____ date/app. by Monolithic _____ date/app. by

Under slab rough-in plumbing _____ date/app. by Slab _____ date/app. by Sheathing/Nailing _____ date/app. by

Framing _____ date/app. by Rough-in plumbing above slab and below wood floor _____ date/app. by

Electrical rough-in _____ date/app. by Heat & Air Duct _____ date/app. by Peri. beam (Lintel) _____ date/app. by

Permanent power _____ date/app. by C.O. Final _____ date/app. by Culvert _____ date/app. by

M/H tie downs, blocking, electricity and plumbing _____ date/app. by Pool _____ date/app. by

Reconnection _____ date/app. by Pump pole _____ date/app. by Utility Pole _____ date/app. by

M/H Pole _____ date/app. by Travel Trailer _____ date/app. by Re-roof _____ date/app. by

BUILDING PERMIT FEE $ 640.00 CERTIFICATION FEE $ 12.72 SURCHARGE FEE $ 12.72

MISC. FEES $ 0.00 ZONING CERT. FEE $ 50.00 FIRE FEE $ 0.00 WASTE FEE $

FLOOD DEVELOPMENT FEE $ FLOOD ZONE FEE $ 25.00 CULVERT FEE $ **TOTAL FEE** 740.44

INSPECTORS OFFICE CLERKS OFFICE CH

NOTICE: IN ADDITION TO THE REQUIREMENTS OF THIS PERMIT, THERE MAY BE ADDITIONAL RESTRICTIONS APPLICABLE TO THIS PROPERTY THAT MAY BE FOUND IN THE PUBLIC RECORDS OF THIS COUNTY. AND THERE MAY BE ADDITIONAL PERMITS REQUIRED FROM OTHER GOVERNMENTAL ENTITIES SUCH AS WATER MANAGEMENT DISTRICTS, STATE AGENCIES, OR FEDERAL AGENCIES.

"WARNING TO OWNER: YOUR FAILURE TO RECORD A NOTICE OF COMMENCEMENT MAY RESULT IN YOUR PAYING TWICE FOR IMPROVEMENTS TO YOUR PROPERTY. IF YOU INTEND TO OBTAIN FINANCING, CONSULT WITH YOUR LENDER OR AN ATTORNEY BEFORE RECORDING YOUR NOTICE OF COMMENCEMENT."

EVERY PERMIT ISSUED SHALL BECOME INVALID UNLESS THE WORK AUTHORIZED BY SUCH PERMIT IS COMMENCED WITHIN 180 DAYS AFTER ITS ISSUANCE, OR IF THE WORK AUTHORIZED BY SUCH PERMIT IS SUSPENDED OR ABANDONED FOR A PERIOD OF 180 DAYS AFTER THE TIME THE WORK IS COMMENCED. A VALID PERMIT RECIEVES AN APPROVED INSPECTION EVERY 180 DAYS. WORK SHALL BE CONSIDERED TO BE IN ACTIVE PROGESS WHEN THE PERMIT HAS RECIEVED AN APPROVED INSPECTION WITHIN 180 DAYS.

The Issuance of this Permit Does Not Waive Compliance by Permittee with Deed Restrictions.

INDIVID. TO INDIVID.

Return to: (enclose self-addressed stamped envelope)

Name: JoAnne T. Perry
Address: 1003 SE C. R. 252
Lake City, Florida 32025

This Instrument Prepared by:

Name: JoAnne T. Perry
Address: 1003 SE C. R. 252
Lake City, Florida 32025

Property Appraisers Parcel Identification Folio Number(s): 16-4S-17-08380-011

Grantee[s] S.S. # (s)

Inst:2005018890 Date:08/05/2005 Time:16:10
Doc Stamp-Deed : 0.70
YK DC,P.DeWitt Cason,Columbia County B:1054 P:611

SPACE ABOVE THIS LINE FOR PROCESSING DATA — SPACE ABOVE THIS LINE FOR RECORDING DATA

This Warranty Deed, *Made the* 5th *day of* August, 2005, *by* Larry E. Perry, Jr., 769 SE C. R. 252, Lake City, Florida 32025, *hereinafter called the Grantor, to* JoAnne T. Perry, *whose post office address is* 1003 SE C. R. 252, Lake City, Florida 32025, *hereinafter called the Grantee.*

(Wherever used herein the terms "Grantor" and "Grantee" include all the parties to this instrument and the heirs, legal representatives, and assigns of individuals, and the successors and assigns of corporations, wherever the context so admits or requires.)

Witnesseth, *That the Grantor, for and in consideration of the sum of* $10.00 *and other valuable considerations, receipt whereof is hereby acknowledged, hereby grants, bargains, sells, aliens, remises, releases, conveys and confirms unto the Grantee all that certain land, situate in* Columbia *County, State of* Florida, *viz:*

Begin at the NE Corner of the NW 1/4 of NW 1/4 of Section 16, Township 4 South, Range 17 East, Columbia County, Florida and run N 89°34'56" West along North line of said Section a distance of 807.3 feet; thence S 0°00'11" East 2562.03 feet to a Point of Beginning; continue S 0°00' 11" East 215.0 feet to the North Right-of-way of State Road 252, thence S 68°11'46" East 238.18 feet, thence N 1°09'13" West 301.77 feet, thence N 89°59'49" West 213.6 feet to Point of Beginning.

NOTE: Sale from Son to Mother

Together, *with all the tenements, hereditaments and appurtenances thereto belonging or in anywise appertaining.* **To Have and to Hold,** *the same in fee simple forever.*

And *the Grantor hereby covenants with said grantee that the grantor is lawfully seized of said land in fee simple; that the grantor has good right and lawful authority to sell and convey said land, and hereby warrants the title to said land and will defend the same against the lawful claims of all persons whomsoever; and that said land is free of all encumbrances, except taxes accruing subsequent to December 31,* 04..

In Witness Whereof, *the said Grantor has signed and sealed these presents the day and year first above written.*

Signed, sealed and delivered in the presence of:

Witness Signature (as to first Grantor)
Brad Bullard
Printed Name

Larry Earl Perry Sr.
Witness Signature (as to first Grantor)
Larry Earl Perry Sr
Printed Name

Witness Signature (as to Co-Grantor, if any)

Printed Name

Witness Signature (as to Co-Grantor, if any)

Printed Name

Grantor Signature L.S.
Larry E. Perry, Jr.
Printed Name
796 SE C. R. 252
Post Office Address
Lake City, Florida 32025

Co-Grantor Signature, (if any) L.S.

Printed Name

Post Office Address

STATE OF Florida)
COUNTY OF Columbia)

I hereby Certify that on this day, before me, an officer duly authorized to administer oaths and take acknowledgments, personally appeared Larry E. Perry, Jr. known to me to be the person____ described in and who executed the foregoing instrument, who acknowledged before me that he executed the same, and an oath was not taken. (Check one:) ☒ Said person(s) is/are personally known to me. ☐ Said person(s) provided the following type of identification: personally known

NOTARY RUBBER STAMP SEAL

Susan Nettles Villegas
My Commission DD267694
Expires December 15, 2007

Witness my hand and official seal in the County and State last aforesaid this 5th day of August, A.D. 2005

Susan N. Villegas
Notary Signature
Susan N. Villegas
Printed Name

©Form Design, Seminole Paper & Printing Co., Inc., 1994

07
23
99

Columbia County Building Permit Application

For Office Use Only Application # 0801 - 48 Date Received 1-11-08 By LH Permit # 26631

Application Approved by - Zoning Official BLK Date 1.6.01.08 Plans Examiner OKSTH Date 1-15-07

Flood Zone X Development Permit N/A Zoning RSF-2 Land Use Plan Map Category RES. LOW DEN

Comments MFE 1ft. above R1

☐ NOC ☐ EH ☐ Deed or PA ☐ Site Plan ☐ State Road Info ☐ Parent Parcel # ☐ Development

Fax

Name Authorized Person Signing Permit LARRY PERRY & JOANNE PERRY Phone 386-365-8765

Address 1003 S.E CR 252 LAKE City, Fl 32025

Owners Name LARRY + JoAnne PERRY Phone 386-365-0940

911 Address 1003 SE CR 252 LAKE CITY, FL.

Contractors Name Self Phone SAME

Address SAME as ABOVE

Fee Simple Owner Name & Address SAME AS ABOVE

Bonding Co. Name & Address N/A

Architect/Engineer Name & Address TIM DELBENE

Mortgage Lenders Name & Address N/A

Circle the correct power company - FL Power & Light - (Clay Elec.) - Suwannee Valley Elec. - Progressive

Property ID Number 08380-011 Estimated Cost of Construction $100,000-120,

Subdivision Name N-A Lot ____ Block ____ Unit ____ Pha

Driving Directions 441 South, turn left on 252, go .9 mile, property on Left.

Type of Construction Wood Frame on Crawlspace Number of Existing Dwellings on Property - 0

Total Acreage 1.27 Lot Size 1.27 Do you need a - Culvert Permit or Culvert Waiver or (Have an Existi

Actual Distance of Structure from Property Lines - Front Ap. 165' Side 42' East Side Ap 130' West Rear 5

Total Building Height 26 Living Area Number of Stories 1 Heated Floor Area 1904 sf TOTAL 2544 Roof Pitch 8-6-3-

Application is hereby made to obtain a permit to do work and installations as indicated. I certify that no work or installation has commenced prior to the issuance of a permit and that all work be performed to meet the standa all laws regulating construction in this jurisdiction.

OWNERS AFFIDAVIT: I hereby certify that all the foregoing information is accurate and all work will be done in compliance with all applicable laws and regulating construction and zoning.

WARNING TO OWNER: YOUR FAILURE TO RECORD A NOTICE OF COMMENCMENT MAY RESULT IN YOU PAY TWICE FOR IMPROVEMENTS TO YOUR PROPERTY. IF YOU INTEND TO OBTAIN FINANCING, CONSULT WITH Y LENDER OR ATTORNEY BEFORE RECORDING YOUR NOTICE OF COMMENCEMENT.

Larry Perry Sr & JoAnne T Perry

Owner Builder or Authorized Person by Notarized Letter

Contractor Signature

Contractors License Number

Competency Card Number

NOTARY STAMP/SEAL

STATE OF FLORIDA
COUNTY OF COLUMBIA

Sworn to (or affirmed) and subscribed before me this 11 day of JANUARY 2008.

Personally known ✓ or Produced Identification

Notary Public State of Florida
Susan Nettles Williams
My Commission DD733130
Expires 12/15/2011

Notary Signature

(Revised Se

Call AC735

JW called + SPOKE w/ JOANNE 1.17.08

WARNING TO OWNER: YOUR FAILURE TO RECORD A NOTICE OF COMMENCMENT MAY RESULT IN YOU PAYING TWICE FOR IMPROVEMENTS TO YOUR PROPERTY. A NOTICE OF COMMENCEMENT MUST BE RECORDED AND POSTED ON THE JOB SITE BEFORE THE FIRST INSPECTION. IF YOU INTEND TO OBTAIN FINANCING, CONSULT WITH YOUR LENDER OR ATTORNEY BEFORE RECORDING YOUR NOTICE OF COMMENCEMENT.

FLORIDA'S CONSTRUCTION LIEN LAW: Protect Yourself and Your Investment
According to Florida Law, those who work on your property or provide materials, and are not paid-in-full, have a right to enforce their claim for payment against your property. This claim is known as a construction lien. If your contractor fails to pay subcontractors or material suppliers or neglects to make other legally required payments, the people who are owed money may look to your property for payment, even if you have paid your contractor in full. This means if a lien is filed against your property, it could be sold against your will to pay for labor, materials or other services which your contractor may have failed to pay.

NOTICE OF RESPONSIBILITY TO BUILDING PERMITEE:
YOU ARE HEREBY NOTIFIED as the recipient of a building permit from Columbia County, Florida, you will be held responsible to the County for any damage to sidewalks and/or road curbs and gutters, concrete features and structures, together with damage to drainage facilities, removal of sod, major changes to lot grades that result in ponding of water, or other damage to roadway and other public infrastructure facilities caused by you or your contractor, subcontractors, agents or representatives in the construction and/or improvement of the building and lot for which this permit is issued. No certificate of occupancy will be issued until all corrective work to these public infrastructures and facilities has been corrected.

OWNERS CERTIFICATION: I hereby certify that all the foregoing information is accurate and all work will be done in compliance with all applicable laws and regulating construction and zoning. I further understand the above written responsibilities in Columbia County for obtaining this Building Permit.

Owners Signature

CONTRACTORS AFFIDAVIT: By my signature I understand and agree that I have informed and provided this written statement to the owner of all the above written responsibilities in Columbia County for obtaining this Building Permit.

Contractor's Signature (Permitee)

Contractor's License Number_____
Columbia County
Competency Card Number_____

Affirmed under penalty of perjury to by the Contractor and subscribed before me this 11 **day of** Jan **20**08.
Personally known_____ **or Produced Identification** FL DL.

State of Florida Notary Signature (For the Contractor)

SEAL:

LAURIE HODSON
MY COMMISSION # DD 333503
EXPIRES: June 28, 2008
Bonded Thru Notary Public Underwriters

Application for Onsite Sewage Disposal System Construction Permit. Part II Site Plan

Permit Application Number: 07-0851-N

ALL CHANGES MUST BE APPROVED BY THE COUNTY HEALTH UNIT

PERRY/CR 05-2986

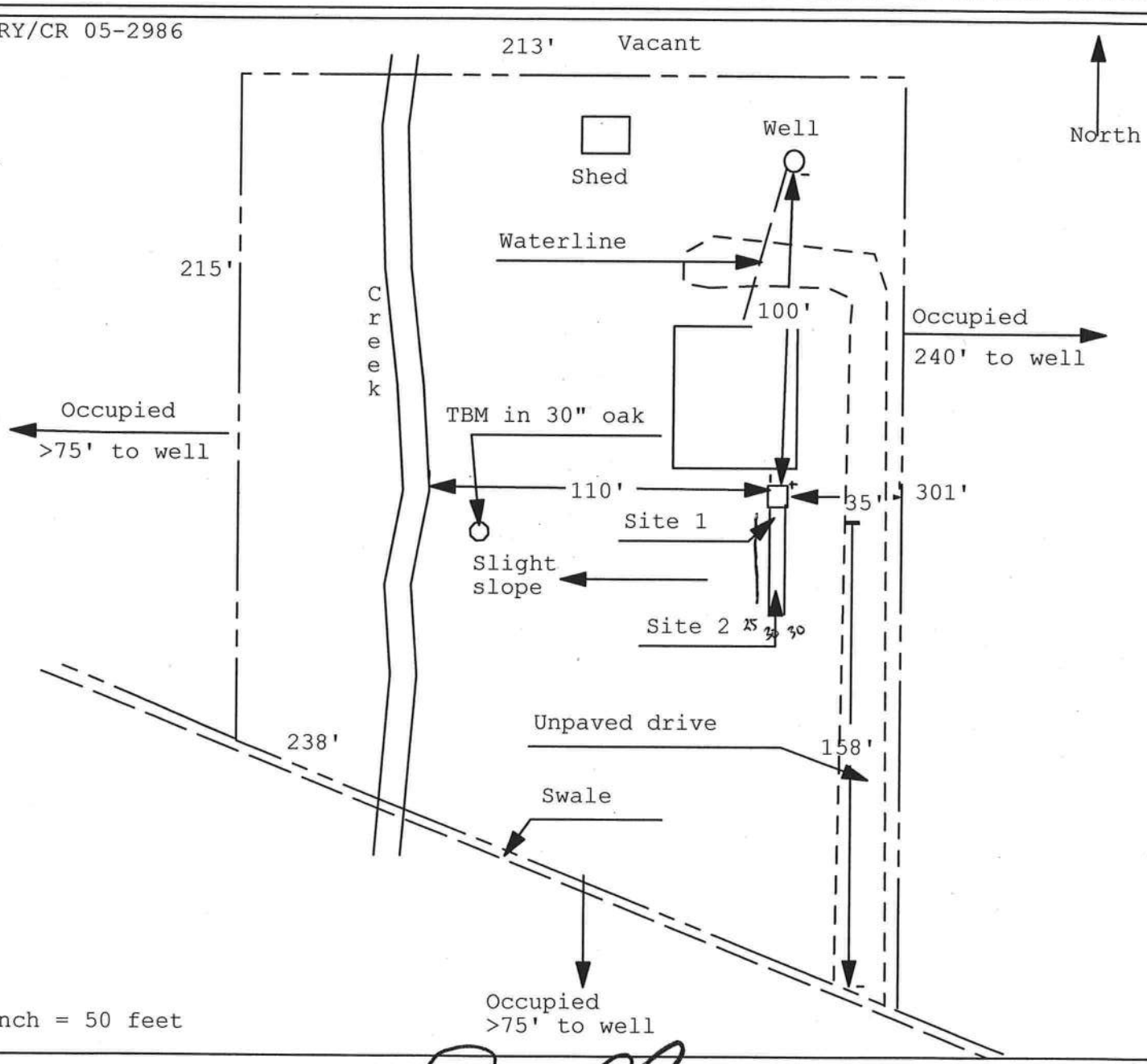

Site Plan Submitted By Paul Lyle **Date** 11/05/07

Plan Approved ✓ **Not Approved** ____ **Date** 11/5/07

By Mark D Zak Columbia **CPHU**

Notes:

DISCLOSURE STATEMENT

FOR OWNER/BUILDER WHEN ACTING AS THER OWN CONTRACTOR AND CLAIMING EXEMPTION OF CONTRACTOR LICENSING REQUIREMENTS IN ACCORDANCE WITH FLORIDA STATUTES, ss. 489.103(7).

State law requires construction to be done by licensed contractors. You have applied for a permit under an exemption to that law. The exemption allows you, as the owner of your property, to act as your own contractor with certain restrictions even though you do not have a license. You must provide direct, onsite supervision of the construction yourself. You may build or improve a one-family or two-family residence or a farm outbuilding. You may also build or improve a commercial building, provided your costs do not exceed $25,000. The building or residence must be for your own use or occupancy. It may not be built or substantially improved for sale or lease. If you sell or lease a building you have built or substantially improved yourself within 1 year after the construction is complete, the law will presume that you built or substantially improved it for sale or lease, which is a violation of this exemption. You may not hire an unlicensed person to act as your contractor or to supervise people working on your building. It is your responsibility to make sure that people employed by you have licenses required by state law and by county or municipal licensing ordinances. You may not delegate the responsibility for supervising work to a licensed contractor who is not licensed to perform the work being done. Any person working on your building who is not licensed must work under your direct supervision and must be employed by you, which means that you must deduct F .I.C.A. and withholding tax and provide workers' compensation for that employee, all as prescribed by law. Your construction must comply with all applicable laws, ordinances, building codes, and zoning regulations.

TYPE OF CONSTRUCTION

(✓) Single Family Dwelling
( ) Farm Outbuilding
(✓) New Construction
( ) Two-Family Residence
( ) Other_____
( ) Addition, Alteration, Modification or other Improvement

NEW CONSTRUCTION OR IMPROVEMENT

I LARRY E. PERRY SR, have been advised of the above disclosure statement for exemption from contractor licensing as an owner/builder. I agree to comply with all requirements provided for in Florida Statutes ss.489.103(7) allowing this exception for the construction permitted by Columbia County Building Permit Number_____

Signature _____ Date 1-11-08

LAURIE HODSON
MY COMMISSION # DD 333503
EXPIRES: June 28, 2008
Bonded Thru Notary Public Underwriters

FOR BUILDING USE ONLY

I hereby certify that the above listed owner/builder has been notified of the disclosure statement in Florida Statutes ss 489.103(7).

Date 1-11-08 Building Official/Representative _____

COLUMBIA COUNTY 9-1-1 ADDRESSING

263 NW Lake City Ave. * P. O. Box 1787 * Lake City, FL 32056-1787
PHONE: (386) 758-1125 * FAX: (386) 758-1365 * Email: ron_croft@columbiacountyfla.com

Addressing Maintenance

To maintain the Countywide Addressing Policy you must make application for a 9-1-1 Address at the time you apply for a building permit. The established standards for assigning and posting numbers to all principal buildings, dwellings, businesses and industries are contained in Columbia County Ordinance 2001-9. The addressing system is to enable Emergency Service Agencies to locate you in an emergency, and to assist the United States Postal Service and the public in the timely and efficient provision of services to residents and businesses of Columbia County.

DATE ISSUED: July 28, 2005

ENHANCED 9-1-1 ADDRESS:

1003 SE COUNTY ROAD 252 (LAKE CITY, FL 32025)

Addressed Location 911 Phone Number: NOT AVAIL.

OCCUPANT NAME: NOT AVAIL.

OCCUPANT CURRENT MAILING ADDRESS:

PROPERTY APPRAISER PARCEL NUMBER: 16-4S-17-08380-011

Other Contact Phone Number (If any):

Building Permit Number (If known):

Remarks:

Address Issued By: _____
Columbia County 9-1-1 Addressing / GIS Department

NOTICE: THIS ADDRESS WAS ISSUED BASED ON LOCATION INFORMATION RECEIVED FROM THE REQUESTER. SHOULD, AT A LATER DATE, THE LOCATION INFORMATION BE FOUND TO BE IN ERROR, THIS ADDRESS IS SUBJECT TO CHANGE.

COLUMBIA COUNTY
9-1-1 ADDRESSING
APPROVED

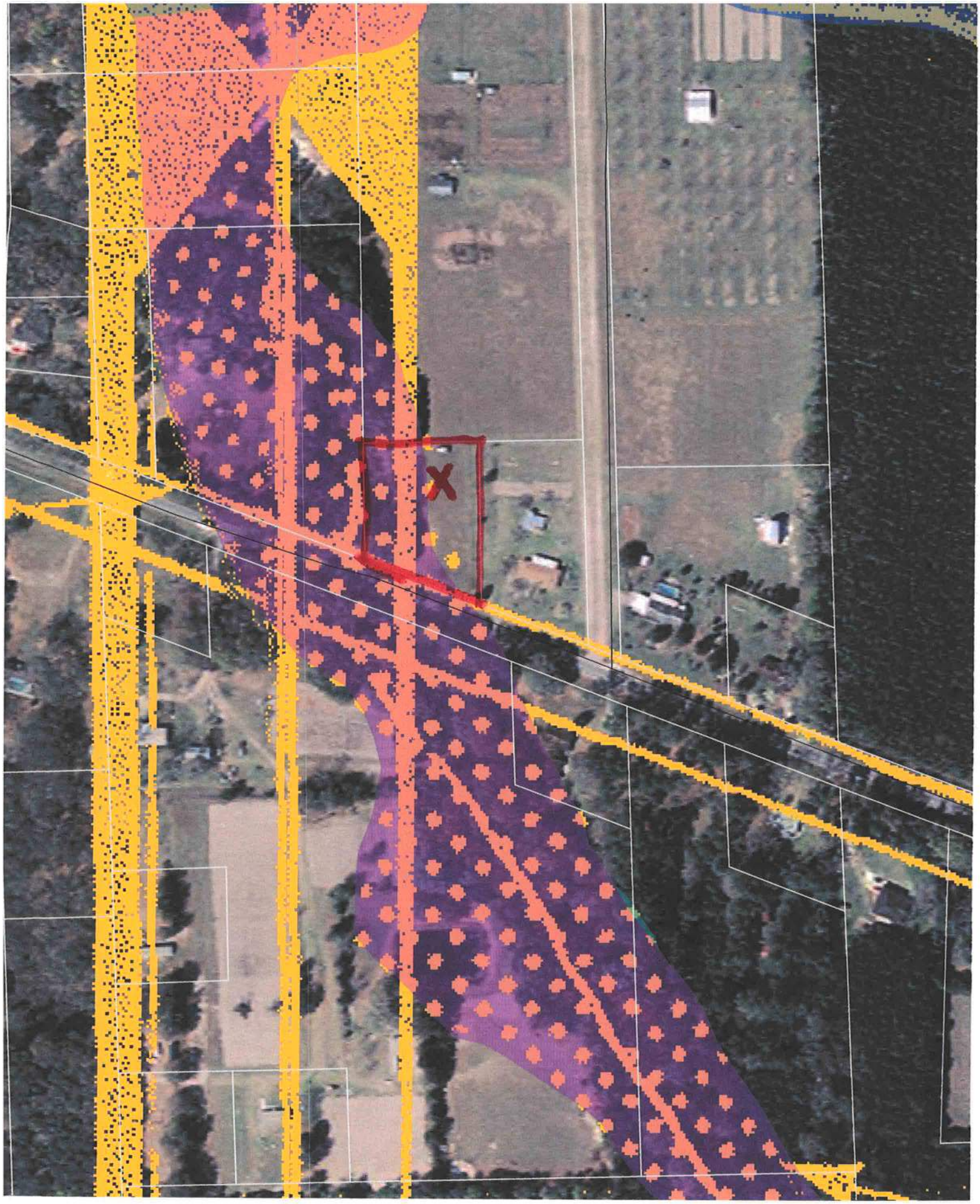

0801-48

Site plan

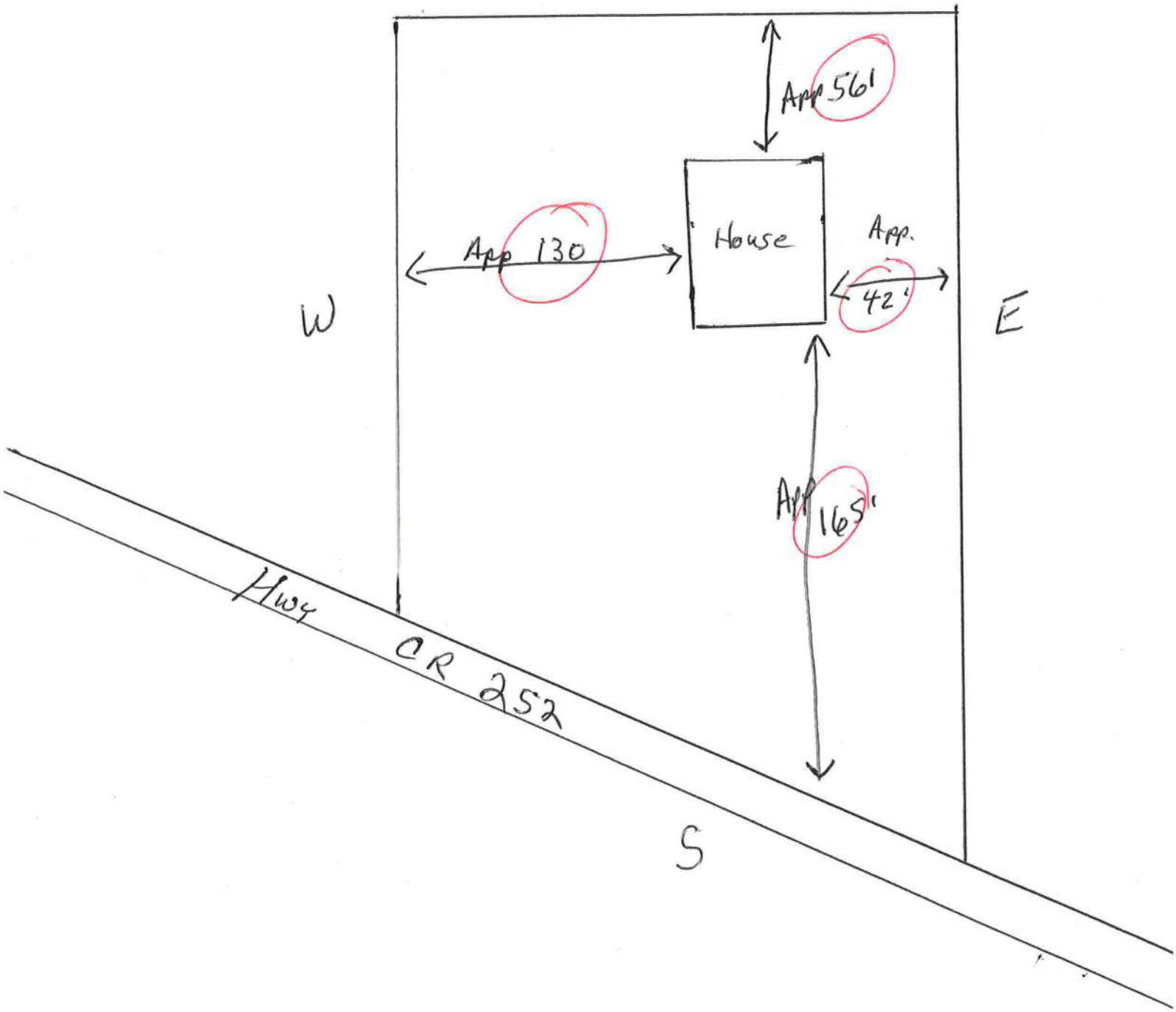

HUGHES WELL DRILLING & PUMP SERVICE

12367 N. US HIGHWAY 441
LAKE CITY, FLORIDA 32055
(386) 752-1840
(888) 216-0068

CUSTOMER'S ORDER NO.	PHONE	DATE
	961 8559	12-6-07

NAME: Larry Perry

ADDRESS: 1003 SE CR 252 Lake City

SOLD BY	CASH	C.O.D.	CHARGE	ON ACCT.	MDSE. RETD.	PAID OUT	

QTY.	DESCRIPTION	PRICE	AMOUNT
1	4" deep well	$3200.00	
5 yr	warranty Pump + Tank + control.		
	Thank you		
	Jerrod Hughes		
	Ck # 3975		
	100' feet deep		
	70' feet Sch80 PVC Casing		
	pump set at 80' of depth		
	60-65' top of water		
		TAX	
RECEIVED BY		TOTAL	

All claims and returned goods MUST be accompanied by this bill.

2796

NEBS To Reorder: 800-225-6380 or nebs.com

Thank You

FORM 600A-2001

FLORIDA ENERGY EFFICIENCY CODE FOR BUILDING CONSTRUCTION

Florida Department of Community Affairs

Residential Whole Building Performance Method A

Project Name:	**Larry Perry Residence**	Builder:	**Owner**
Address:	**1003 SE Co Rd 252**	Permitting Office:	**Columbia Co**
City, State:	**Lake City, FL 32025-**	Permit Number:	
Owner:	**Larry Perry**	Jurisdiction Number:	**121000**
Climate Zone:	**North**		

1. New construction or existing		New	
2. Single family or multi-family		Single family	
3. Number of units, if multi-family		1	
4. Number of Bedrooms		3	
5. Is this a worst case?		No	
6. Conditioned floor area (ft²)		1904 ft²	
7. Glass area & type	Single Pane	Double Pane	
a. Clear glass, default U-factor	0.0 ft²	233.0 ft²	
b. Default tint	0.0 ft²	0.0 ft²	
c. Labeled U or SHGC	0.0 ft²	0.0 ft²	
8. Floor types			
a. Raised Wood, Stem Wall		ft²	
b. N/A			
c. N/A			
9. Wall types			
a. Frame, Wood, Exterior		R=13.0, 1324.0 ft²	
b. N/A			
c. N/A			
d. N/A			
e. N/A			
10. Ceiling types			
a. Under Attic		R=30.0, 1904.0 ft²	
b. N/A			
c. N/A			
11. Ducts			
a. Sup: Unc. Ret: Unc. AH: Interior		Sup. R=6.0, 16.0 ft	
b. N/A			

12. Cooling systems		
a. Central Unit	Cap: 35.0 kBtu/hr	
	SEER: 14.00	
b. N/A		
c. N/A		
13. Heating systems		
a. Electric Heat Pump	Cap: 35.0 kBtu/hr	
	HSPF: 7.90	
b. N/A		
c. N/A		
14. Hot water systems		
a. Electric Resistance	Cap: 30.0 gallons	
	EF: 0.90	
b. N/A		
c. Conservation credits (HR-Heat recovery, Solar DHP-Dedicated heat pump)		
15. HVAC credits (CF-Ceiling fan, CV-Cross ventilation, HF-Whole house fan, PT-Programmable Thermostat, MZ-C-Multizone cooling, MZ-H-Multizone heating)	PT, CF,	

Glass/Floor Area: 0.12

Total as-built points: 22525
Total base points: 27939

PASS

I hereby certify that the plans and specifications covered by this calculation are in compliance with the Florida Energy Code.

PREPARED BY: Tim Delbene

DATE: 12/28/07 T. Delbene

I hereby certify that this building, as designed, is in compliance with the Florida Energy Code.

OWNER/AGENT: _____

DATE: _____

Review of the plans and specifications covered by this calculation indicates compliance with the Florida Energy Code. Before construction is completed this building will be inspected for compliance with Section 553.908 Florida Statutes.

GREAT SEAL OF THE STATE OF FLORIDA — IN GOD WE TRUST

BUILDING OFFICIAL: _____

DATE: _____

FORM 600A-2001

SUMMER CALCULATIONS

Residential Whole Building Performance Method A - Details

ADDRESS: **1003 SE Co Rd 252, Lake City, FL, 32025-** PERMIT #:

BASE				AS-BUILT							
GLASS TYPES .18 X Conditioned Floor Area	X BSPM	= Points		Type/SC	Overhang Ornt	Len	Hgt	Area X	SPM X	SOF	= Points
.18	1904.0	20.04	6868.1	Double, Clear	N	2.0	8.0	30.0	19.20	0.94	540.7
				Double, Clear	S	10.0	8.0	60.0	35.87	0.49	1053.4
				Double, Clear	E	2.0	5.0	5.0	42.06	0.80	167.6
				Double, Clear	E	10.0	5.0	9.0	42.06	0.39	148.5
				Double, Clear	E	10.0	8.0	60.0	42.06	0.46	1168.8
				Double, Clear	W	2.0	8.0	60.0	38.52	0.91	2111.2
				Double, Clear	W	2.0	5.0	9.0	38.52	0.80	277.1
				As-Built Total:				**233.0**			**5467.3**

WALL TYPES	Area X	BSPM =	Points	Type	R-Value	Area X	SPM =	Points
Adjacent	0.0	0.00	0.0	Frame, Wood, Exterior	13.0	1324.0	1.50	1986.0
Exterior	1324.0	1.70	2250.8					
Base Total:	**1324.0**		**2250.8**	**As-Built Total:**		**1324.0**		**1986.0**

DOOR TYPES	Area X	BSPM =	Points	Type	Area X	SPM =	Points
Adjacent	0.0	0.00	0.0	Exterior Insulated	21.0	4.10	86.1
Exterior	63.0	6.10	384.3	Exterior Insulated	21.0	4.10	86.1
				Exterior Insulated	21.0	4.10	86.1
Base Total:	**63.0**		**384.3**	**As-Built Total:**	**63.0**		**258.3**

CEILING TYPES	Area X	BSPM =	Points	Type	R-Value	Area X	SPM X SCM =	Points
Under Attic	1904.0	1.73	3293.9	Under Attic	30.0	1904.0	1.73 X 1.00	3293.9
Base Total:	**1904.0**		**3293.9**	**As-Built Total:**		**1904.0**		**3293.9**

FLOOR TYPES	Area X	BSPM =	Points	Type	R-Value	Area X	SPM =	Points
Slab	0.0(p)	0.0	0.0	Raised Wood, Stem Wall	19.0	1904.0	-1.50	-2856.0
Raised	1904.0	-3.99	-7597.0					
Base Total:			**-7597.0**	**As-Built Total:**		**1904.0**		**-2856.0**

INFILTRATION	Area X	BSPM =	Points	Area X	SPM =	Points
	1904.0	10.21	19439.8	1904.0	10.21	19439.8

FORM 600A-2001

SUMMER CALCULATIONS

Residential Whole Building Performance Method A - Details

ADDRESS: **1003 SE Co Rd 252, Lake City, FL, 32025-** PERMIT #:

BASE				AS-BUILT								
Summer Base Points:			**24640.0**	**Summer As-Built Points:**								**27589.4**
Total Summer Points	X	System Multiplier	= Cooling Points	Total Component	X	Cap Ratio	X	Duct Multiplier (DM x DSM x AHU)	X	System Multiplier	X	Credit Multiplier	= Cooling Points
				27589.4		1.000		(1.090 x 1.147 x 0.91)		0.244		0.902	6906.0
24640.0		**0.4266**	**10511.4**	**27589.4**		**1.00**		**1.138**		**0.244**		**0.902**	**6906.0**

FORM 600A-2001

WINTER CALCULATIONS

Residential Whole Building Performance Method A - Details

ADDRESS: **1003 SE Co Rd 252, Lake City, FL, 32025-** PERMIT #:

BASE				AS-BUILT							
GLASS TYPES .18 X Conditioned Floor Area	X BWPM	= Points		Type/SC	Overhang Ornt	Len	Hgt	Area X	WPM X	WOF	= Points
.18	1904.0	12.74	4366.3	Double, Clear	N	2.0	8.0	30.0	24.58	1.00	739.1
				Double, Clear	S	10.0	8.0	60.0	13.30	3.09	2462.5
				Double, Clear	E	2.0	5.0	5.0	18.79	1.08	101.8
				Double, Clear	E	10.0	5.0	9.0	18.79	1.45	245.2
				Double, Clear	E	10.0	8.0	60.0	18.79	1.35	1519.7
				Double, Clear	W	2.0	8.0	60.0	20.73	1.02	1272.9
				Double, Clear	W	2.0	5.0	9.0	20.73	1.06	197.6
				As-Built Total:				**233.0**			**6538.7**

WALL TYPES	Area X	BWPM	= Points	Type	R-Value	Area X	WPM	= Points
Adjacent	0.0	0.00	0.0	Frame, Wood, Exterior	13.0	1324.0	3.40	4501.6
Exterior	1324.0	3.70	4898.8					
Base Total:	**1324.0**		**4898.8**	**As-Built Total:**		**1324.0**		**4501.6**

DOOR TYPES	Area X	BWPM	= Points	Type	Area X	WPM	= Points
Adjacent	0.0	0.00	0.0	Exterior Insulated	21.0	8.40	176.4
Exterior	63.0	12.30	774.9	Exterior Insulated	21.0	8.40	176.4
				Exterior Insulated	21.0	8.40	176.4
Base Total:	**63.0**		**774.9**	**As-Built Total:**	**63.0**		**529.2**

CEILING TYPES	Area X	BWPM	= Points	Type	R-Value	Area X	WPM X WCM	= Points
Under Attic	1904.0	2.05	3903.2	Under Attic	30.0	1904.0	2.05 X 1.00	3903.2
Base Total:	**1904.0**		**3903.2**	**As-Built Total:**		**1904.0**		**3903.2**

FLOOR TYPES	Area X	BWPM	= Points	Type	R-Value	Area X	WPM	= Points
Slab	0.0(p)	0.0	0.0	Raised Wood, Stem Wall	19.0	1904.0	0.80	1523.2
Raised	1904.0	0.96	1827.8					
Base Total:			**1827.8**	**As-Built Total:**		**1904.0**		**1523.2**

INFILTRATION	Area X	BWPM	= Points	Area X	WPM	= Points
	1904.0	-0.59	-1123.4	1904.0	-0.59	-1123.4

FORM 600A-2001

WINTER CALCULATIONS

Residential Whole Building Performance Method A - Details

ADDRESS: **1003 SE Co Rd 252, Lake City, FL, 32025-** PERMIT #:

BASE				AS-BUILT							
Winter Base Points:			**14647.6**	**Winter As-Built Points:**							**15872.6**
Total Winter Points	X	System Multiplier	= Heating Points	Total Component	X	Cap Ratio	X Duct Multiplier (DM x DSM x AHU)	X System Multiplier	X	Credit Multiplier	= Heating Points
14647.6		**0.6274**	**9189.9**	15872.6 **15872.6**		1.000 **1.00**	(1.069 x 1.169 x 0.93) **1.162**	0.432 **0.432**		0.950 **0.950**	7564.4 **7564.4**

FORM 600A-2001

WATER HEATING & CODE COMPLIANCE STATUS

Residential Whole Building Performance Method A - Details

ADDRESS: **1003 SE Co Rd 252, Lake City, FL, 32025-** PERMIT #:

BASE				AS-BUILT							
WATER HEATING											
Number of Bedrooms	X	Multiplier	= Total	Tank Volume	EF	Number of Bedrooms	X Tank Ratio	X Multiplier	X Credit Multiplier	= Total	
3		2746.00	8238.0	30.0	0.90	3	1.00	2684.98	1.00	8054.9	
				As-Built Total:						**8054.9**	

CODE COMPLIANCE STATUS

BASE				AS-BUILT			
Cooling Points +	Heating Points +	Hot Water Points =	Total Points	Cooling Points +	Heating Points +	Hot Water Points =	Total Points
10511	**9190**	**8238**	**27939**	**6906**	**7564**	**8055**	**22525**

PASS

FORM 600A-2001

Code Compliance Checklist

Residential Whole Building Performance Method A - Details

ADDRESS: **1003 SE Co Rd 252, Lake City, FL, 32025-** PERMIT #:

6A-21 INFILTRATION REDUCTION COMPLIANCE CHECKLIST

COMPONENTS	SECTION	REQUIREMENTS FOR EACH PRACTICE	CHECK
Exterior Windows & Doors	606.1.ABC.1.1	Maximum:.3 cfm/sq.ft. window area; .5 cfm/sq.ft. door area.	✓
Exterior & Adjacent Walls	606.1.ABC.1.2.1	Caulk, gasket, weatherstrip or seal between: windows/doors & frames, surrounding wall; foundation & wall sole or sill plate; joints between exterior wall panels at corners; utility penetrations; between wall panels & top/bottom plates; between walls and floor. EXCEPTION: Frame walls where a continuous infiltration barrier is installed that extends from, and is sealed to, the foundation to the top plate.	✓
Floors	606.1.ABC.1.2.2	Penetrations/openings >1/8" sealed unless backed by truss or joint members. EXCEPTION: Frame floors where a continuous infiltration barrier is installed that is sealed to the perimeter, penetrations and seams.	✓
Ceilings	606.1.ABC.1.2.3	Between walls & ceilings; penetrations of ceiling plane of top floor; around shafts, chases, soffits, chimneys, cabinets sealed to continuous air barrier; gaps in gyp board & top plate; attic access. EXCEPTION: Frame ceilings where a continuous infiltration barrier is installed that is sealed at the perimeter, at penetrations and seams.	✓
Recessed Lighting Fixtures	606.1.ABC.1.2.4	Type IC rated with no penetrations, sealed; or Type IC or non-IC rated, installed inside a sealed box with 1/2" clearance & 3" from insulation; or Type IC rated with < 2.0 cfm from conditioned space, tested.	✓
Multi-story Houses	606.1.ABC.1.2.5	Air barrier on perimeter of floor cavity between floors.	N/A
Additional Infiltration reqts	606.1.ABC.1.3	Exhaust fans vented to outdoors, dampers; combustion space heaters comply with NFPA, have combustion air.	✓

6A-22 OTHER PRESCRIPTIVE MEASURES (must be met or exceeded by all residences.)

COMPONENTS	SECTION	REQUIREMENTS	CHECK
Water Heaters	612.1	Comply with efficiency requirements in Table 6-12. Switch or clearly marked circuit breaker (electric) or cutoff (gas) must be provided. External or built-in heat trap required.	✓
Swimming Pools & Spas	612.1	Spas & heated pools must have covers (except solar heated). Non-commercial pools must have a pump timer. Gas spa & pool heaters must have a minimum thermal efficiency of 78%.	N/A
Shower heads	612.1	Water flow must be restricted to no more than 2.5 gallons per minute at 80 PSIG.	✓
Air Distribution Systems	610.1	All ducts, fittings, mechanical equipment and plenum chambers shall be mechanically attached, sealed, insulated, and installed in accordance with the criteria of Section 610. Ducts in unconditioned attics: R-6 min. insulation.	✓
HVAC Controls	607.1	Separate readily accessible manual or automatic thermostat for each system.	✓
Insulation	604.1, 602.1	Ceilings-Min. R-19. Common walls-Frame R-11 or CBS R-3 both sides. Common ceiling & floors R-11.	✓

Category/Subcategory (cont.)	Manufacturer	Product Description	Approval Number(s)
13. Liquid Applied Roof Sys			
14. Cements-Adhesives – Coatings			FL. 1960-R1
15. Roof Tile Adhesive			
16. Spray Applied Polyurethane Roof			
17. Other			
E. SHUTTERS			
1. Accordion			
2. Bahama			
3. Storm Panels			
4. Colonial			
5. Roll-up			
6. Equipment			
7. Others			
F. SKYLIGHTS			FL 451-R1
1. Skylight			
2. Other			
G. STRUCTURAL COMPONENTS			
1. Wood connector/anchor			FL. 474-R1
2. Truss plates			FL 1008-R1
3. Engineered lumber			
4. Railing			
5. Coolers-freezers			
6. Concrete Admixtures			
7. Material			
8. Insulation Forms			
9. Plastics			
10. Deck-Roof			
11. Wall			
12. Sheds			
13. Other			
H. NEW EXTERIOR ENVELOPE PRODUCTS			
1.			
2.			

The products listed below did not demonstrate product approval at plan review. I understand that at the time of inspection of these products, the following information must be available to the inspector on the jobsite; 1) copy of the product approval, 2) the performance characteristics which the product was tested and certified to comply with, 3) copy of the applicable manufacturers installation requirements.

I understand these products may have to be removed if approval cannot be demonstrated during inspectio

Contractor or Contractor's Authorized Agent Signature

Print Name

Date

Location

Permit # (FOR STAFF USE ONLY)

ITW Building Components Group, Inc.

1950 Marley Drive Haines City, FL 33844
Florida Engineering Certificate of Authorization Number: 0 278
Florida Certificate of Product Approval # FL1999
 Document ID:1TD08228Z0104134914

Truss Fabricator: Anderson Truss Company
Job Identification: 7-345--OWNER BUILDER Larry Perry -- 365-8765 c
Truss Count: 24
Model Code: Florida Building Code 2004 and 2006 Supplement
Truss Criteria: ANSI/TPI-2002(STD)/FBC
Engineering Software: Alpine Software,Versions 7.36, 7.37.
Structural Engineer of Record: The identity of the structural EOR did not exist as of
Address: the seal date per section 61G15-31.003(5a) of the FAC
Minimum Design Loads: Roof - 40.0 PSF @ 1.25 Duration
Floor - N/A
Wind - 110 MPH ASCE 7-02 -Closed

Seal Date: 12/04/2007

-Truss Design Engineer-
Doug Fleming
Florida License Number: 66648
1950 Marley Drive
Haines City, FL 33844

Notes:

1. Determination as to the suitability of these truss components for the structure is the responsibility of the building designer/engineer of record, as defined in ANSI/TPI 1
2. The drawing date shown on this index sheet must match the date shown on the individual truss component drawing.
3. As shown on attached drawings; the drawing number is preceded by: HCUSR8228

Details: A11015EE-GBLLETIN-BRCLBSUB-140GC-PIGBACKA-PIGBACKB-A11030EE-

#	Ref Description	Drawing#	Date
1	32349--AA-GE	07338112	12/04/07
2	32350--A1	07338100	12/04/07
3	32351--A2	07338101	12/04/07
4	32352--A-GE	07338107	12/04/07
5	32353--B-GE	07338108	12/04/07
6	32354--B1	07338102	12/04/07
7	32355--B2	07338103	12/04/07
8	32356--B3	07338104	12/04/07
9	32357--J3	07338091	12/04/07
10	32358--J5	07338092	12/04/07
11	32359--J7	07338093	12/04/07
12	32360--J7A	07338094	12/04/07
13	32361--J3A	07338095	12/04/07
14	32362--J1	07338105	12/04/07
15	32363--J0	07338106	12/04/07
16	32364--HJ8	07338109	12/04/07
17	32365--HJ8A	07338110	12/04/07
18	32366--M4	07338096	12/04/07
19	32367--M3	07338097	12/04/07
20	32368--M-GE	07338111	12/04/07
21	32369--M1	07338098	12/04/07
22	32370--M2	07338099	12/04/07
23	32371--PB2	07338113	12/04/07
24	32372--PB1	07338114	12/04/07

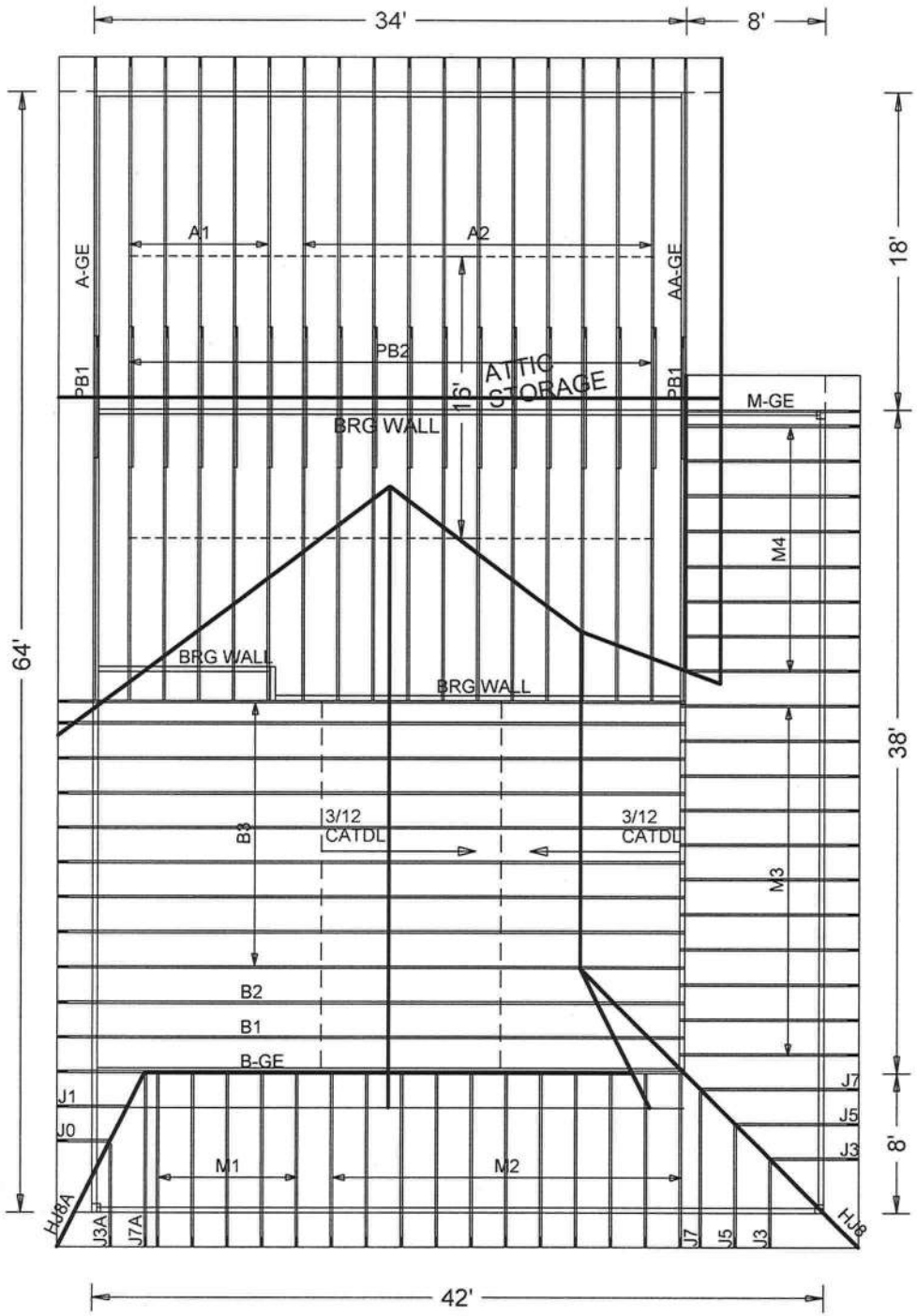

#7-345
LARRY PERRY
ROOF

Roof Plane Sheathing Area = 3454 sq. ft
Gable Sheathing Area = 465 sq. ft
Total Sheathing Area = 3919 sq. ft
Fascia Material = 254 linear ft
Valley Flashing Material = 58 linear ft
Ridge Cap Material = 93 linear ft
Hip Ridge Material = 57 linear ft

JOB DESCRIPTION:: OWNER BUILDER
/: Larry Perry

JOB NO:
7-345

PAGE NO:
1 OF 1

THIS DWG PREPARED FROM COMPUTER INPUT (LOADS & DIMENSIONS) SUBMITTED BY TRUSS MFR.

Top chord 2x4 SP #2 Dense
Bot chord 2x8 SP SS
Webs 2x4 SP #3

(A) 1x4 #3 or better "L" brace. 80% length of web member. Attach with 8d Box or Gun (0.113"x2.5",min.)nails @ 6" OC.

Deflection meets L/240 live and L/180 total load. Creep increase factor for dead load is 1.50.

SPECIAL LOADS
------(LUMBER DUR.FAC.=1.25 / PLATE DUR.FAC.=1.25)

TC - From	64 PLF	at -2.00 to	64 PLF	at 13.84	
TC - From	64 PLF	at 13.84 to	64 PLF	at 20.80	
TC - From	64 PLF	at 20.80 to	64 PLF	at 34.65	
BC - From	5 PLF	at -2.00 to	5 PLF	at 0.00	
BC - From	20 PLF	at 0.00 to	20 PLF	at 9.32	
BC - From	120 PLF	at 9.32 to	120 PLF	at 25.32	
BC - From	20 PLF	at 25.32 to	20 PLF	at 34.65	

BC - 298 LB Conc. Load at 18.91, 20.91, 22.91, 24.91, 26.91, 28.91, 30.91, 32.91

Wind reactions based on MWFRS pressures.

110 mph wind, 15.00 ft mean hgt, ASCE 7-02, CLOSED bldg, Located anywhere in roof, CAT II, EXP B, wind TC DL=5.0 psf, wind BC DL=5.0 psf. Iw=1.00 GCpi(+/-)=0.18

Truss spaced at 24.0" OC designed to support 1-0-0 top chord outlookers. Cladding load shall not exceed 10.00 PSF. Top chord must not be cut or notched.

See DWGS A11015EE0207 & GBLLETIN0207 for more requirements.

In lieu of structural panels use purlins to brace all flat TC @ 24" OC.

THE BUILDING DESIGNER IS RESPONSIBLE FOR THE DESIGN OF THE ROOF, FLOOR AND CEILING DIAPHRAGMS, GABLE END SHEAR WALLS, AND SUPPORTING SHEAR WALLS. DIAPHRAGMS AND SHEAR WALLS MUST PROVIDE CONTINUOUS LATERAL RESTRAINT TO THE GABLE END. ALL CONNECTIONS ARE TO BE PROVIDED BY THE BUILDING DESIGNER.

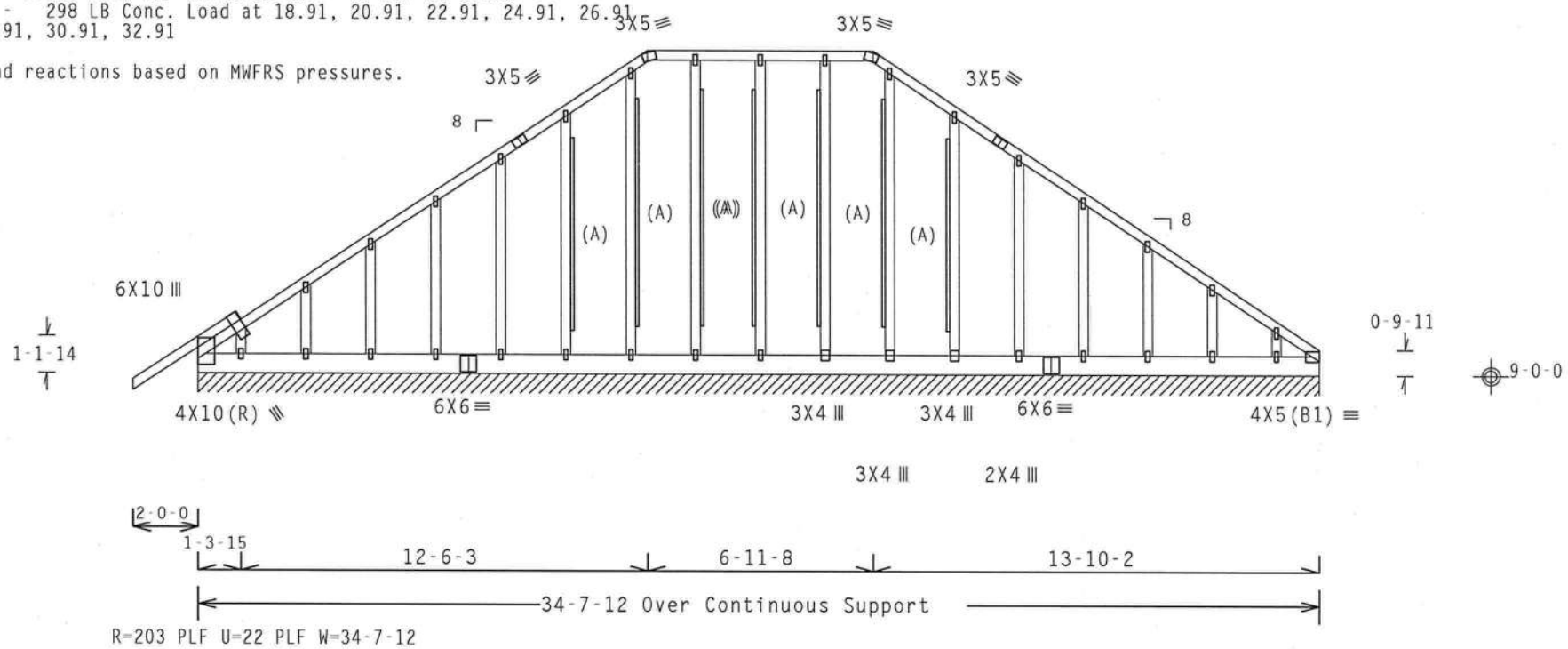

Note: All Plates Are 1.5X4 Except As Shown.

Design Crit: TPI-2002(STD)/FBC

PLT TYP. Wave Cq/RT=1.00(1.25)/0(0) 7.36.0 QTY:1 FL/-/4/-/-/R/- Scale =.1875"/Ft.

ALPINE
ITW Building Components Group, Inc.
Haines City, FL 33844
FL Certificate of Authorization #0278

WARNING TRUSSES REQUIRE EXTREME CARE IN FABRICATION, HANDLING, SHIPPING, INSTALLING AND BRACING. REFER TO BCSI (BUILDING COMPONENT SAFETY INFORMATION), PUBLISHED BY TPI (TRUSS PLATE INSTITUTE, 218 NORTH LEE STREET, SUITE 312, ALEXANDRIA, VA, 22314) AND WTCA (WOOD TRUSS COUNCIL OF AMERICA, 6300 ENTERPRISE LANE, MADISON, WI 53719) FOR SAFETY PRACTICES PRIOR TO PERFORMING THESE FUNCTIONS. UNLESS OTHERWISE INDICATED TOP CHORD SHALL HAVE PROPERLY ATTACHED STRUCTURAL PANELS AND BOTTOM CHORD SHALL HAVE A PROPERLY ATTACHED RIGID CEILING.

IMPORTANT FURNISH A COPY OF THIS DESIGN TO THE INSTALLATION CONTRACTOR. ITW BCG, INC. SHALL NOT BE RESPONSIBLE FOR ANY DEVIATION FROM THIS DESIGN; ANY FAILURE TO BUILD THE TRUSS IN COMFORMANCE WITH TPI; OR FABRICATING, HANDLING, SHIPPING, INSTALLING & BRACING OF TRUSSES.
DESIGN CONFORMS WITH APPLICABLE PROVISIONS OF NDS (NATIONAL DESIGN SPEC. BY AF&PA) AND TPI. ITW BCG CONNECTOR PLATES ARE MADE OF 20/18/16GA (W,H/SS/K) ASTM A653 GRADE 40/60 (W, K/H,SS) GALV. STEEL. APPLY PLATES TO EACH FACE OF TRUSS AND, UNLESS OTHERWISE LOCATED ON THIS DESIGN, POSITION PER DRAWINGS 160A-Z. ANY INSPECTION OF PLATES FOLLOWED BY (1) SHALL BE PER ANNEX A3 OF TPI1-2002 SEC.3. A SEAL ON THIS DRAWING INDICATES ACCEPTANCE OF PROFESSIONAL ENGINEERING RESPONSIBILITY SOLELY FOR THE TRUSS COMPONENT DESIGN SHOWN. THE SUITABILITY AND USE OF THIS COMPONENT FOR ANY BUILDING IS THE RESPONSIBILITY OF THE BUILDING DESIGNER PER ANSI/TPI 1 SEC. 2.

DOUGLAS FLEMING LICENSE No. 66648 STATE OF FLORIDA PROFESSIONAL ENGINEER
DEC 04 '07

TC LL	20.0 PSF	REF	R8228- 32349
TC DL	10.0 PSF	DATE	12/04/07
BC DL	10.0 PSF	DRW	HCUSR8228 07338112
BC LL	0.0 PSF	HC-ENG	JB/DF
TOT.LD.	40.0 PSF	SEQN-	64475
DUR.FAC.	1.25	FROM	AH
SPACING	24.0"	JREF-	1TD08228Z01

THIS DWG PREPARED FROM COMPUTER INPUT (LOADS & DIMENSIONS) SUBMITTED BY TRUSS MFR.

Top chord 2x4 SP #2 Dense
Bot chord 2x8 SP SS :B3 2x4 SP #2 Dense:
Webs 2x4 SP #3 :W3, W9 2x4 SP #2 Dense:
:Lt Slider 2x4 SP #3: BLOCK LENGTH = 1.734'
:Rt Slider 2x4 SP #3: BLOCK LENGTH = 1.500'

Calculated horizontal deflection is 0.26" due to live load and 0.44" due to dead load.

Collar-tie braced with continuous lateral bracing at 24" OC. or rigid ceiling.

Deflection meets L/240 live and L/180 total load. Creep increase factor for dead load is 1.50.

110 mph wind, 15.00 ft mean hgt, ASCE 7-02, CLOSED bldg, Located anywhere in roof, CAT II, EXP B, wind TC DL=5.0 psf, wind BC DL=5.0 psf. Iw=1.00 GCpi(+/-)=0.18

Wind reactions based on MWFRS pressures.

In lieu of structural panels use purlins to brace all flat TC @ 24" OC.

BC attic room floor loading: LL = 40.00 psf; DL = 10.00 psf; from 9-3-14 to 25-3-14.

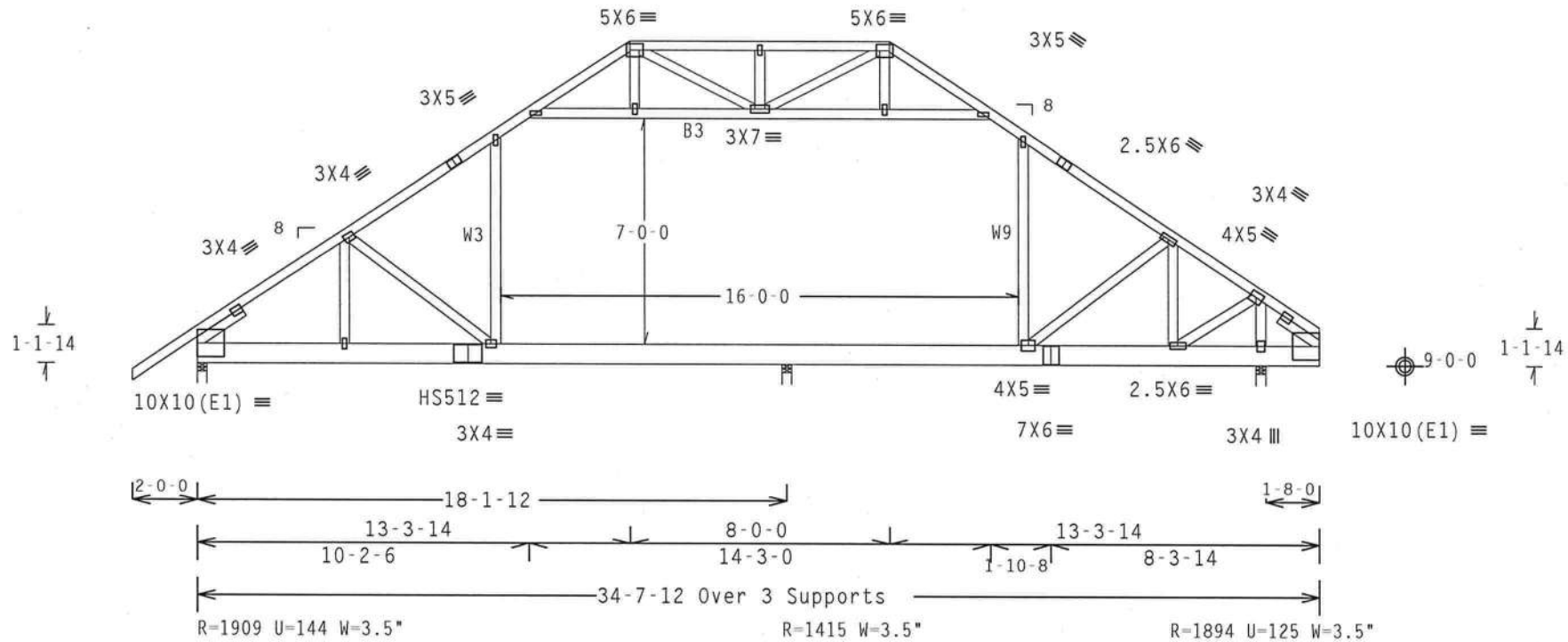

Note: All Plates Are 1.5X4 Except As Shown.

Design Crit: TPI-2002(STD)/FBC

PLT TYP. 20 Gauge HS,Wave Cq/RT=1.00(1.25)/0(0) 7.36.042 QTY:1 FL/-/4/-/-/R/- Scale =.1875"/Ft.

ALPINE

ITW Building Components Group, Inc.
Haines City, FL 33844
FL Certificate of Authorization # 0 278

WARNING TRUSSES REQUIRE EXTREME CARE IN FABRICATION, HANDLING, SHIPPING, INSTALLING AND BRACING. REFER TO BCSI (BUILDING COMPONENT SAFETY INFORMATION), PUBLISHED BY TPI (TRUSS PLATE INSTITUTE, 218 NORTH LEE STREET, SUITE 312, ALEXANDRIA, VA, 22314) AND WTCA (WOOD TRUSS COUNCIL OF AMERICA, 6300 ENTERPRISE LANE, MADISON, WI 53719) FOR SAFETY PRACTICES PRIOR TO PERFORMING THESE FUNCTIONS. UNLESS OTHERWISE INDICATED TOP CHORD SHALL HAVE PROPERLY ATTACHED STRUCTURAL PANELS AND BOTTOM CHORD SHALL HAVE A PROPERLY ATTACHED RIGID CEILING.

IMPORTANTFURNISH A COPY OF THIS DESIGN TO THE INSTALLATION CONTRACTOR. ITW BCG, INC. SHALL NOT BE RESPONSIBLE FOR ANY DEVIATION FROM THIS DESIGN; ANY FAILURE TO BUILD THE TRUSS IN COMFORMANCE WITH TPI; OR FABRICATING, HANDLING, SHIPPING, INSTALLING & BRACING OF TRUSSES.
DESIGN CONFORMS WITH APPLICABLE PROVISIONS OF NDS (NATIONAL DESIGN SPEC. BY AF&PA) AND TPI. ITW BCG CONNECTOR PLATES ARE MADE OF 20/18/16GA (W,H/SS/K) ASTM A653 GRADE 40/60 (W, K/H,SS) GALV. STEEL. APPLY PLATES TO EACH FACE OF TRUSS AND, UNLESS OTHERWISE LOCATED ON THIS DESIGN, POSITION PER DRAWINGS 160A-Z. ANY INSPECTION OF PLATES FOLLOWED BY (1) SHALL BE PER ANNEX A3 OF TPI1-2002 SEC.3. A SEAL ON THIS DRAWING INDICATES ACCEPTANCE OF PROFESSIONAL ENGINEERING RESPONSIBILITY SOLELY FOR THE TRUSS COMPONENT DESIGN SHOWN. THE SUITABILITY AND USE OF THIS COMPONENT FOR ANY BUILDING IS THE RESPONSIBILITY OF THE BUILDING DESIGNER PER ANSI/TPI 1 SEC. 2.

DOUGLAS FLEMING LICENSE No. 66648 STATE OF FLORIDA PROFESSIONAL ENGINEER

TC LL	20.0 PSF	REF R8228- 32350
TC DL	10.0 PSF	DATE 12/04/07
BC DL	10.0 PSF	DRW HCUSR8228 07338100
BC LL	0.0 PSF	HC-ENG JB/DF
TOT.LD.	40.0 PSF	SEQN- 64447
DUR.FAC.	1.25	FROM AH
SPACING	24.0"	JREF- 1TD08228Z01

DEC 04 '07

THIS DWG PREPARED FROM COMPUTER INPUT (LOADS & DIMENSIONS) SUBMITTED BY TRUSS MFR.

Top chord 2x4 SP #2 Dense
Bot chord 2x8 SP SS :B3 2x4 SP #2 Dense:
Webs 2x4 SP #3 :W3, W9 2x4 SP #2 Dense:
:Lt Slider 2x4 SP #3: BLOCK LENGTH = 1.734'
:Rt Slider 2x4 SP #3: BLOCK LENGTH = 1.500'

Calculated horizontal deflection is 0.19" due to live load and 0.32" due to dead load.

Collar-tie braced with continuous lateral bracing at 24" OC. or rigid ceiling.

Deflection meets L/240 live and L/180 total load. Creep increase factor for dead load is 1.50.

110 mph wind, 15.00 ft mean hgt, ASCE 7-02, CLOSED bldg, Located anywhere in roof, CAT II, EXP B, wind TC DL=5.0 psf, wind BC DL=5.0 psf. Iw=1.00 GCpi(+/-)=0.18

Wind reactions based on MWFRS pressures.

In lieu of structural panels use purlins to brace all flat TC @ 24" OC.

BC attic room floor loading: LL = 40.00 psf; DL = 10.00 psf; from 9-3-14 to 25-3-14.

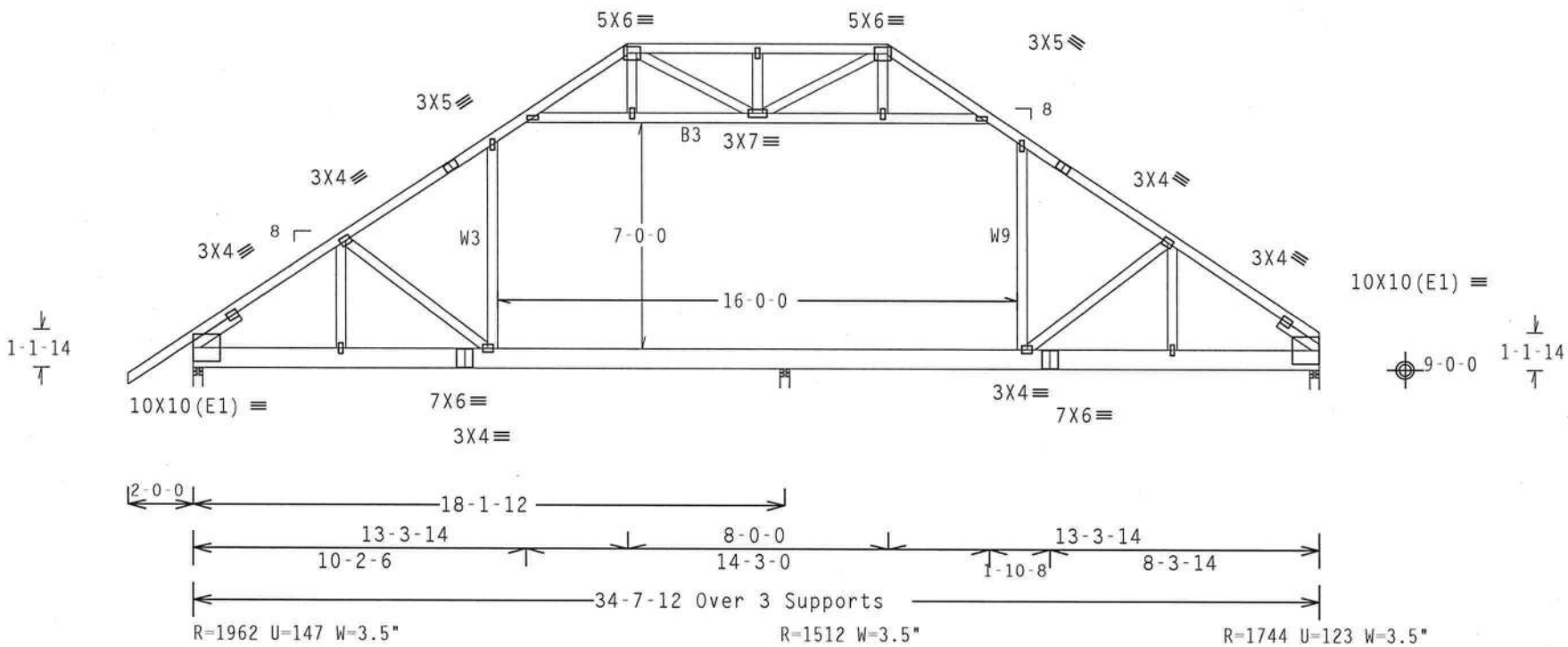

Note: All Plates Are 1.5X4 Except As Shown.

Design Crit: TPI-2002(STD)/FBC

PLT TYP. Wave | Cq/RT=1.00(1.25)/0(0) | 7.36.042 | QTY:1 | FL/-/4/-/-/R/- | Scale =.1875"/Ft.

ALPINE
ITW Building Components Group, Inc.
Haines City, FL 33844
FL Certificate of Authorization #0 270

WARNING TRUSSES REQUIRE EXTREME CARE IN FABRICATION, HANDLING, SHIPPING, INSTALLING AND BRACING. REFER TO BCSI (BUILDING COMPONENT SAFETY INFORMATION), PUBLISHED BY TPI (TRUSS PLATE INSTITUTE, 218 NORTH LEE STREET, SUITE 312, ALEXANDRIA, VA, 22314) AND WTCA (WOOD TRUSS COUNCIL OF AMERICA, 6300 ENTERPRISE LANE, MADISON, WI 53719) FOR SAFETY PRACTICES PRIOR TO PERFORMING THESE FUNCTIONS. UNLESS OTHERWISE INDICATED TOP CHORD SHALL HAVE PROPERLY ATTACHED STRUCTURAL PANELS AND BOTTOM CHORD SHALL HAVE A PROPERLY ATTACHED RIGID CEILING.

IMPORTANTFURNISH A COPY OF THIS DESIGN TO THE INSTALLATION CONTRACTOR. ITW BCG, INC. SHALL NOT BE RESPONSIBLE FOR ANY DEVIATION FROM THIS DESIGN; ANY FAILURE TO BUILD THE TRUSS IN COMFORMANCE WITH TPI; OR FABRICATING, HANDLING, SHIPPING, INSTALLING & BRACING OF TRUSSES.
DESIGN CONFORMS WITH APPLICABLE PROVISIONS OF NDS (NATIONAL DESIGN SPEC. BY AF&PA) AND TPI. ITW BCG CONNECTOR PLATES ARE MADE OF 20/18/16GA (W,H/SS/K) ASTM A653 GRADE 40/60 (W, K/H,SS) GALV. STEEL. APPLY PLATES TO EACH FACE OF TRUSS AND, UNLESS OTHERWISE LOCATED ON THIS DESIGN, POSITION PER DRAWINGS 160A-Z. ANY INSPECTION OF PLATES FOLLOWED BY (1) SHALL BE PER ANNEX A3 OF TPI1-2002 SEC.3. A SEAL ON THIS DRAWING INDICATES ACCEPTANCE OF PROFESSIONAL ENGINEERING RESPONSIBILITY SOLELY FOR THE TRUSS COMPONENT DESIGN SHOWN. THE SUITABILITY AND USE OF THIS COMPONENT FOR ANY BUILDING IS THE RESPONSIBILITY OF THE BUILDING DESIGNER PER ANSI/TPI 1 SEC. 2.

DOUGLAS FLEMING LICENSE No. 66648 STATE OF FLORIDA PROFESSIONAL ENGINEER

DEC 04 '07

TC LL	20.0 PSF	REF R8228- 32351
TC DL	10.0 PSF	DATE 12/04/07
BC DL	10.0 PSF	DRW HCUSR8228 07338101
BC LL	0.0 PSF	HC-ENG JB/DF
TOT.LD.	40.0 PSF	SEQN- 64438
DUR.FAC.	1.25	FROM AH
SPACING	24.0"	JREF- 1TD08228Z01

THIS DWG PREPARED FROM COMPUTER INPUT (LOADS & DIMENSIONS) SUBMITTED BY TRUSS MFR.

Top chord 2x4 SP #2 Dense
Bot chord 2x8 SP SS
Webs 2x4 SP #3

SPECIAL LOADS
------(LUMBER DUR.FAC.=1.25 / PLATE DUR.FAC.=1.25)

TC - From	64 PLF	at -2.00 to	64 PLF	at 1.17
TC - From	64 PLF	at 1.17 to	64 PLF	at 9.82
TC - From	64 PLF	at 9.82 to	64 PLF	at 13.84
TC - From	64 PLF	at 13.84 to	64 PLF	at 20.80
TC - From	64 PLF	at 20.80 to	64 PLF	at 24.82
TC - From	64 PLF	at 24.82 to	64 PLF	at 34.65
BC - From	5 PLF	at -2.00 to	5 PLF	at 0.00
BC - From	20 PLF	at 0.00 to	20 PLF	at 8.32
BC - From	20 PLF	at 8.32 to	20 PLF	at 9.32
BC - From	120 PLF	at 9.32 to	120 PLF	at 25.32
BC - From	20 PLF	at 25.32 to	20 PLF	at 26.32
BC - From	20 PLF	at 26.32 to	20 PLF	at 34.65

Wind reactions based on MWFRS pressures.

110 mph wind, 15.00 ft mean hgt, ASCE 7-02, CLOSED bldg, Located anywhere in roof, CAT II, EXP B, wind TC DL=5.0 psf, wind BC DL=5.0 psf. Iw=1.00 GCpi(+/-)=0.18

Truss spaced at 24.0" OC designed to support 2-0-0 top chord outlookers. Cladding load shall not exceed 10.00 PSF. Top chord must not be cut or notched.

See DWGS A11015EE0207 & GBLLETIN0207 for more requirements.

(A) 1x4 #3 or better "L" brace. 80% length of web member. Attach with 8d Box or Gun (0.113"x2.5",min.)nails @ 6" OC.

In lieu of structural panels use purlins to brace all flat TC @ 24" OC.

Deflection meets L/240 live and L/180 total load. Creep increase factor for dead load is 1.50.

The building designer is responsible for the design of the roof and ceiling diaphragms, gable end shear walls, and supporting shear walls. Shear walls must provide continuous lateral restraint to the gable end. All connections to be designed by the building designer.

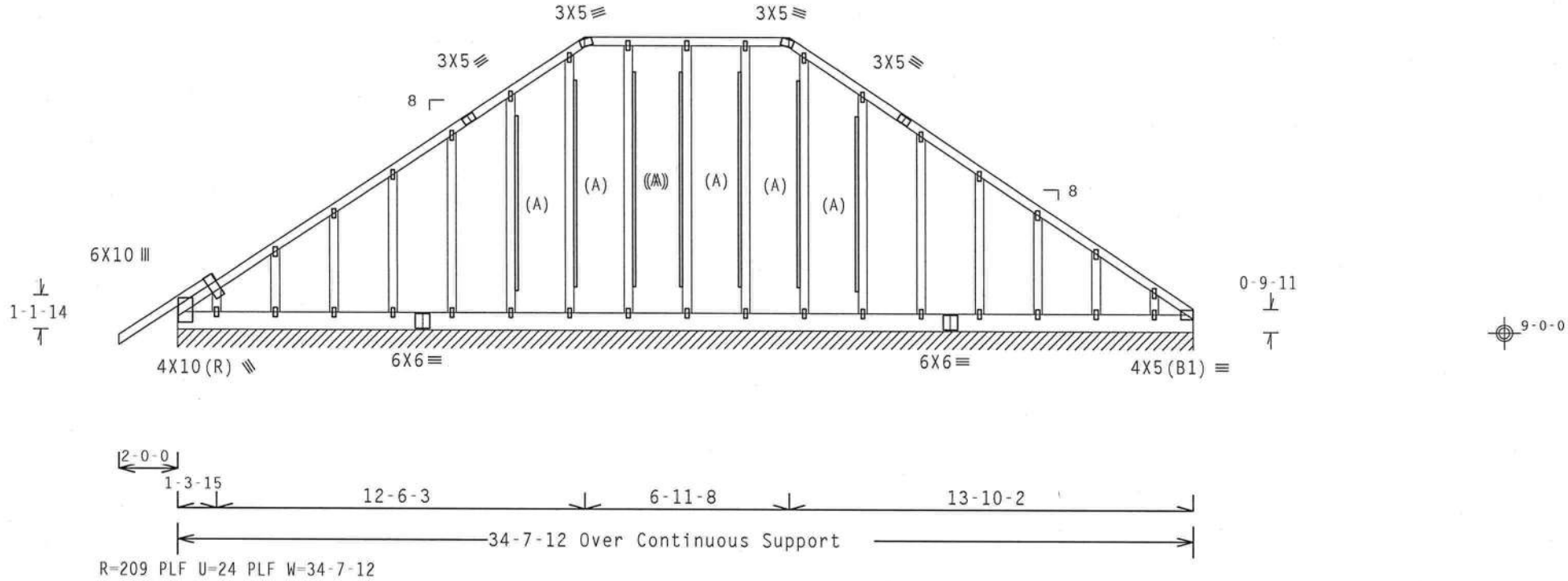

R=209 PLF U=24 PLF W=34-7-12

Note: All Plates Are 1.5X4 Except As Shown.

Design Crit: TPI-2002(STD)/FBC

PLT TYP. Wave Cq/RT=1.00(1.25)/0(0) 7.36.0424 QTY:1 FL/-/4/-/-/R/- Scale =.1875"/Ft.

ALPINE
ITW Building Components Group, Inc.
Haines City, FL 33844
FL Certificate of Authorization #0-278

WARNING TRUSSES REQUIRE EXTREME CARE IN FABRICATION, HANDLING, SHIPPING, INSTALLING AND BRACING. REFER TO BCSI (BUILDING COMPONENT SAFETY INFORMATION), PUBLISHED BY TPI (TRUSS PLATE INSTITUTE, 218 NORTH LEE STREET, SUITE 312, ALEXANDRIA, VA, 22314) AND WTCA (WOOD TRUSS COUNCIL OF AMERICA, 6300 ENTERPRISE LANE, MADISON, WI 53719) FOR SAFETY PRACTICES PRIOR TO PERFORMING THESE FUNCTIONS. UNLESS OTHERWISE INDICATED TOP CHORD SHALL HAVE PROPERLY ATTACHED STRUCTURAL PANELS AND BOTTOM CHORD SHALL HAVE A PROPERLY ATTACHED RIGID CEILING.

IMPORTANTFURNISH A COPY OF THIS DESIGN TO THE INSTALLATION CONTRACTOR. ITW BCG, INC. SHALL NOT BE RESPONSIBLE FOR ANY DEVIATION FROM THIS DESIGN; ANY FAILURE TO BUILD THE TRUSS IN COMFORMANCE WITH TPI; OR FABRICATING, HANDLING, SHIPPING, INSTALLING & BRACING OF TRUSSES.
DESIGN CONFORMS WITH APPLICABLE PROVISIONS OF NDS (NATIONAL DESIGN SPEC, BY AF&PA) AND TPI. ITW BCG CONNECTOR PLATES ARE MADE OF 20/18/16GA (W,H/SS/K) ASTM A653 GRADE 40/60 (W, K/H,SS) GALV. STEEL. APPLY PLATES TO EACH FACE OF TRUSS AND, UNLESS OTHERWISE LOCATED ON THIS DESIGN, POSITION PER DRAWINGS 160A-Z. ANY INSPECTION OF PLATES FOLLOWED BY (I) SHALL BE PER ANNEX A3 OF TPI1-2002 SEC.3. A SEAL ON THIS DRAWING INDICATES ACCEPTANCE OF PROFESSIONAL ENGINEERING RESPONSIBILITY SOLELY FOR THE TRUSS COMPONENT DESIGN SHOWN. THE SUITABILITY AND USE OF THIS COMPONENT FOR ANY BUILDING IS THE RESPONSIBILITY OF THE BUILDING DESIGNER PER ANSI/TPI 1 SEC. 2.

DOUGLAS FLEMING LICENSE No. 66648 STATE OF FLORIDA PROFESSIONAL ENGINEER

TC LL	20.0 PSF	REF R8228- 32352
TC DL	10.0 PSF	DATE 12/04/07
BC DL	10.0 PSF	DRW HCUSR8228 07338107
BC LL	0.0 PSF	HC-ENG JB/DF
TOT.LD.	40.0 PSF	SEQN- 64465
DUR.FAC.	1.25	FROM AH
SPACING	24.0"	JREF- 1TD08228Z01

THIS DWG PREPARED FROM COMPUTER INPUT (LOADS & DIMENSIONS) SUBMITTED BY TRUSS MFR.

Top chord 2x4 SP #2 Dense
Bot chord 2x6 SP #2
Webs 2x4 SP #3

SPECIAL LOADS
------(LUMBER DUR.FAC.=1.25 / PLATE DUR.FAC.=1.25)

TC - From	62 PLF	at	-2.00 to	62 PLF	at	3.00
TC - From	185 PLF	at	3.00 to	185 PLF	at	34.00
BC - From	4 PLF	at	-2.00 to	4 PLF	at	0.00
BC - From	20 PLF	at	0.00 to	20 PLF	at	3.00
BC - From	49 PLF	at	3.00 to	49 PLF	at	34.00
BC -	465 LB Conc. Load	at	3.00			
BC -	661 LB Conc. Load	at	34.00			

Wind reactions based on MWFRS pressures.

Deflection meets L/240 live and L/180 total load. Creep increase factor for dead load is 1.50.

(**) 2 plate(s) require special positioning. Refer to scaled plate plot details for special positioning requirements.

110 mph wind, 15.00 ft mean hgt, ASCE 7-02, CLOSED bldg, not located within 4.50 ft from roof edge, CAT II, EXP B, wind TC DL=5.0 psf, wind BC DL=5.0 psf. Iw=1.00 GCpi(+/-)=0.18

Truss spaced at 24.0" OC designed to support 2-0-0 top chord outlookers. Cladding load shall not exceed 10.00 PSF. Top chord must not be cut or notched.

In lieu of structural panels use purlins to brace all flat TC @ 24" OC.

Shim all supports to solid bearing.

The building designer is responsible for the design of the roof and ceiling diaphragms, gable end shear walls, and supporting shear walls. Shear walls must provide continuous lateral restraint to the gable end. All connections to be designed by the building designer.

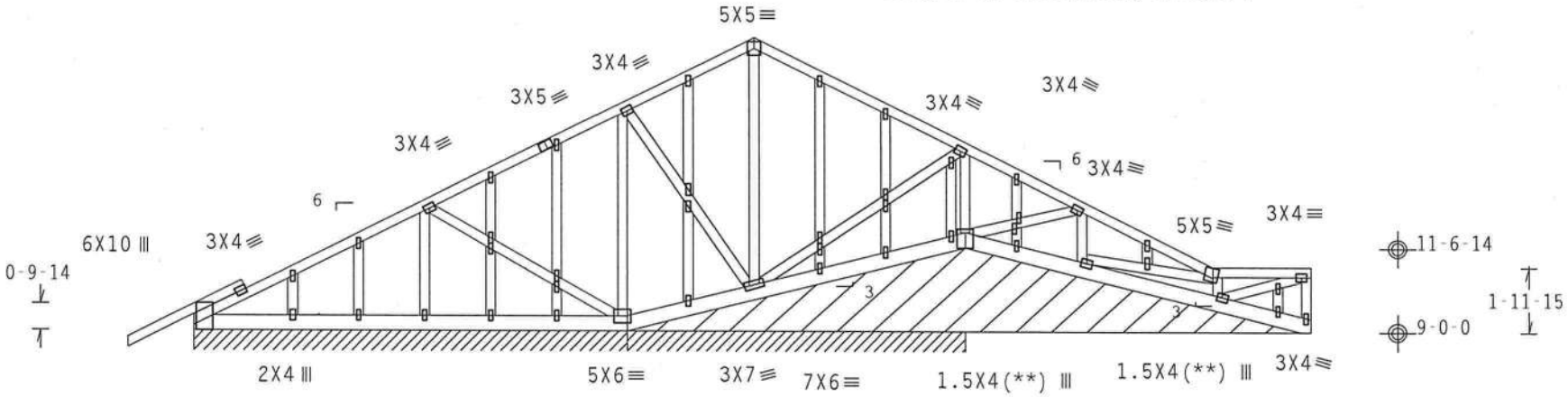

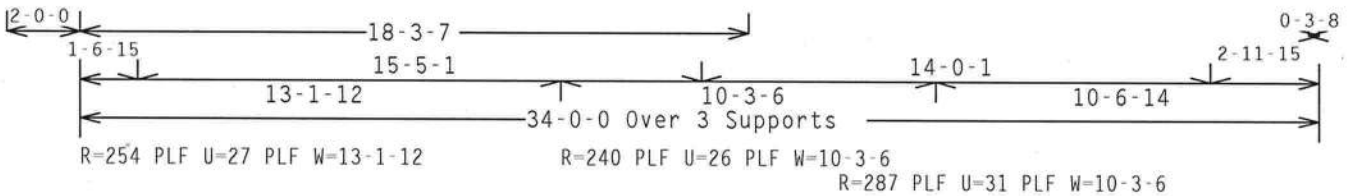

Note: All Plates Are 1.5X4 Except As Shown.

Design Crit: TPI-2002(STD)/FBC

PLT TYP. Wave Cq/RT=1.00(1.25)/0(0) 7.36.04 QTY:1 FL/-/4/-/-/R/- Scale =.1875"/Ft.

ALPINE
ITW Building Components Group, Inc.
Haines City, FL 33844
Florida Certificate of Authorization #

WARNING TRUSSES REQUIRE EXTREME CARE IN FABRICATION, HANDLING, SHIPPING, INSTALLING AND BRACING. REFER TO BCSI (BUILDING COMPONENT SAFETY INFORMATION), PUBLISHED BY TPI (TRUSS PLATE INSTITUTE, 218 NORTH LEE STREET, SUITE 312, ALEXANDRIA, VA. 22314) AND WTCA (WOOD TRUSS COUNCIL OF AMERICA, 6300 ENTERPRISE LANE, MADISON, WI 53719) FOR SAFETY PRACTICES PRIOR TO PERFORMING THESE FUNCTIONS. UNLESS OTHERWISE INDICATED TOP CHORD SHALL HAVE PROPERLY ATTACHED STRUCTURAL PANELS AND BOTTOM CHORD SHALL HAVE A PROPERLY ATTACHED RIGID CEILING.

IMPORTANTFURNISH A COPY OF THIS DESIGN TO THE INSTALLATION CONTRACTOR. ITW BCG, INC. SHALL NOT BE RESPONSIBLE FOR ANY DEVIATION FROM THIS DESIGN; ANY FAILURE TO BUILD THE TRUSS IN COMFORMANCE WITH TPI; OR FABRICATING, HANDLING, SHIPPING, INSTALLING & BRACING OF TRUSSES.
DESIGN CONFORMS WITH APPLICABLE PROVISIONS OF NDS (NATIONAL DESIGN SPEC. BY AF&PA) AND TPI. ITW BCG CONNECTOR PLATES ARE MADE OF 20/18/16GA (W,H/SS/K) ASTM A653 GRADE 40/60 (W, K/H,SS) GALV. STEEL. APPLY PLATES TO EACH FACE OF TRUSS AND, UNLESS OTHERWISE LOCATED ON THIS DESIGN, POSITION PER DRAWINGS 160A-Z. ANY INSPECTION OF PLATES FOLLOWED BY (1) SHALL BE PER ANNEX A3 OF TPI1-2002 SEC.3. A SEAL ON THIS DRAWING INDICATES ACCEPTANCE OF PROFESSIONAL ENGINEERING RESPONSIBILITY SOLELY FOR THE TRUSS COMPONENT DESIGN SHOWN. THE SUITABILITY AND USE OF THIS COMPONENT FOR ANY BUILDING IS THE RESPONSIBILITY OF THE BUILDING DESIGNER PER ANSI/TPI 1 SEC. 2.

DOUGLAS FLEMING LICENSE No. 66648 STATE OF FLORIDA PROFESSIONAL ENGINEER

TC LL	20.0 PSF	REF R8228- 32353
TC DL	10.0 PSF	DATE 12/04/07
BC DL	10.0 PSF	DRW HCUSR8228 07338108
BC LL	0.0 PSF	HC-ENG JB/DF
TOT.LD.	40.0 PSF	SEQN- 64555
DUR.FAC.	1.25	FROM AH
SPACING	24.0"	JREF- 1TD08228Z01

C 04 '07

THIS DWG PREPARED FROM COMPUTER INPUT (LOADS & DIMENSIONS) SUBMITTED BY TRUSS MFR.

Top chord 2x4 SP #2 Dense
Bot chord 2x4 SP #2 Dense
Webs 2x4 SP #3
:Lt Slider 2x4 SP #3: BLOCK LENGTH = 2.008'

Calculated horizontal deflection is 0.12" due to live load and 0.18" due to dead load.

(A) Continuous lateral bracing equally spaced on member.

Deflection meets L/240 live and L/180 total load. Creep increase factor for dead load is 1.50.

110 mph wind, 15.00 ft mean hgt, ASCE 7-02, CLOSED bldg, not located within 4.50 ft from roof edge, CAT II, EXP B, wind TC DL=5.0 psf, wind BC DL=5.0 psf. Iw=1.00 GCpi(+/-)=0.18

Wind reactions based on MWFRS pressures.

Right end vertical not exposed to wind pressure.

In lieu of structural panels use purlins to brace all flat TC @ 24" OC.

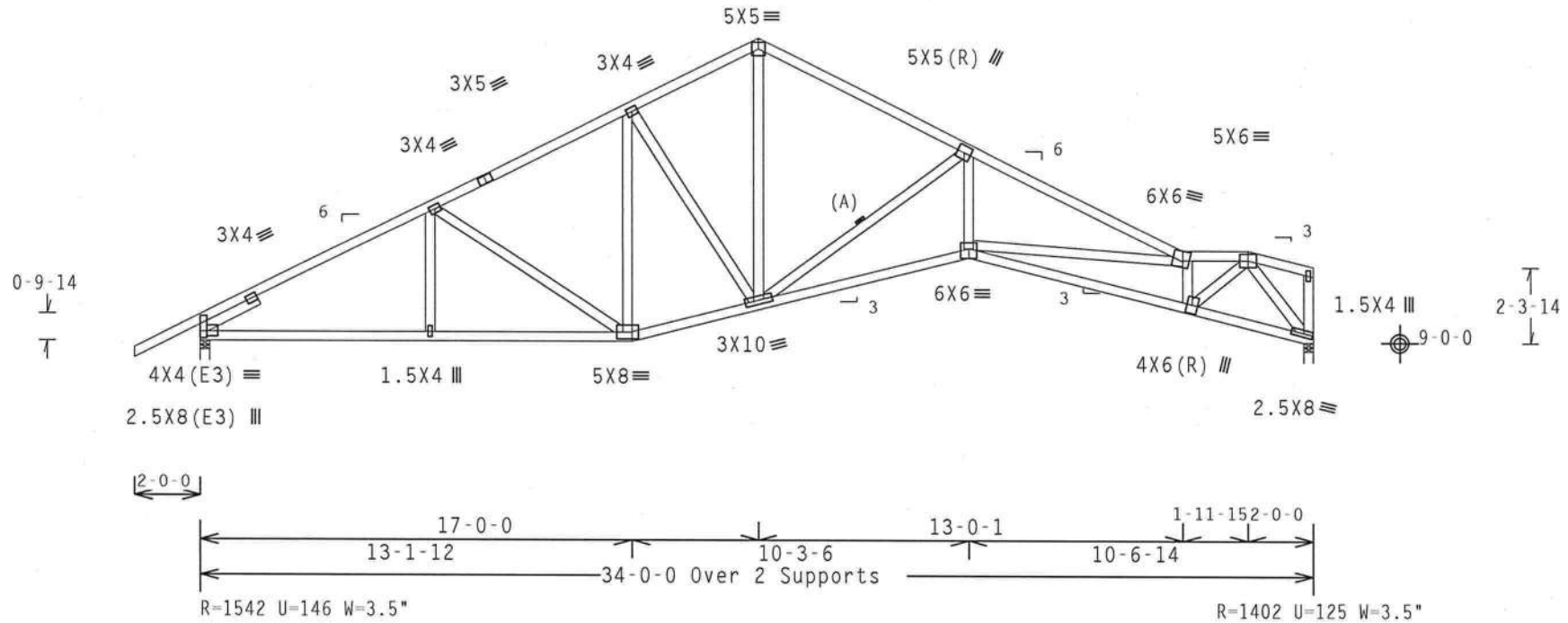

Design Crit: TPI-2002(STD)/FBC
Cq/RT=1.00(1.25)/0(0) 7.36.0424

PLT TYP. Wave

QTY:1 FL/-/4/-/-/R/-

Scale =.1875"/Ft.

WARNING TRUSSES REQUIRE EXTREME CARE IN FABRICATION, HANDLING, SHIPPING, INSTALLING AND BRACING. REFER TO BCSI (BUILDING COMPONENT SAFETY INFORMATION), PUBLISHED BY TPI (TRUSS PLATE INSTITUTE, 218 NORTH LEE STREET, SUITE 312, ALEXANDRIA, VA, 22314) AND WTCA (WOOD TRUSS COUNCIL OF AMERICA, 6300 ENTERPRISE LANE, MADISON, WI 53719) FOR SAFETY PRACTICES PRIOR TO PERFORMING THESE FUNCTIONS. UNLESS OTHERWISE INDICATED TOP CHORD SHALL HAVE PROPERLY ATTACHED STRUCTURAL PANELS AND BOTTOM CHORD SHALL HAVE A PROPERLY ATTACHED RIGID CEILING.

IMPORTANTFURNISH A COPY OF THIS DESIGN TO THE INSTALLATION CONTRACTOR. ITW BCG, INC. SHALL NOT BE RESPONSIBLE FOR ANY DEVIATION FROM THIS DESIGN; ANY FAILURE TO BUILD THE TRUSS IN CONFORMANCE WITH TPI; OR FABRICATING, HANDLING, SHIPPING, INSTALLING & BRACING OF TRUSSES.
DESIGN CONFORMS WITH APPLICABLE PROVISIONS OF NDS (NATIONAL DESIGN SPEC, BY AF&PA) AND TPI. ITW BCG CONNECTOR PLATES ARE MADE OF 20/18/16GA (W,H/SS/K) ASTM A653 GRADE 40/60 (W, K/H,SS) GALV. STEEL. APPLY PLATES TO EACH FACE OF TRUSS AND, UNLESS OTHERWISE LOCATED ON THIS DESIGN, POSITION PER DRAWINGS 160A-Z. ANY INSPECTION OF PLATES FOLLOWED BY (1) SHALL BE PER ANNEX A3 OF TPI1-2002 SEC.3. A SEAL ON THIS DRAWING INDICATES ACCEPTANCE OF PROFESSIONAL ENGINEERING RESPONSIBILITY SOLELY FOR THE TRUSS COMPONENT DESIGN SHOWN. THE SUITABILITY AND USE OF THIS COMPONENT FOR ANY BUILDING IS THE RESPONSIBILITY OF THE BUILDING DESIGNER PER ANSI/TPI 1 SEC. 2.

ALPINE
ITW Building Components Group, Inc.
Haines City, FL 33844
FL Certificate of Authorization #0 278

DOUGLAS FLEMING LICENSE No. 66648 STATE OF FLORIDA PROFESSIONAL ENGINEER

'07

TC LL	20.0 PSF	REF R8228- 32354
TC DL	10.0 PSF	DATE 12/04/07
BC DL	10.0 PSF	DRW HCUSR8228 07338102
BC LL	0.0 PSF	HC-ENG JB/DF
TOT.LD.	40.0 PSF	SEQN- 64533
DUR.FAC.	1.25	FROM AH
SPACING	24.0"	JREF- 1TD08228Z01

THIS DWG PREPARED FROM COMPUTER INPUT (LOADS & DIMENSIONS) SUBMITTED BY TRUSS MFR.

Top chord 2x4 SP #2 Dense
Bot chord 2x4 SP #2 Dense
Webs 2x4 SP #3
:Lt Slider 2x4 SP #3: BLOCK LENGTH = 2.008'

Calculated horizontal deflection is 0.12" due to live load and 0.19" due to dead load.

(A) Continuous lateral bracing equally spaced on member.

Deflection meets L/240 live and L/180 total load. Creep increase factor for dead load is 1.50.

110 mph wind, 15.00 ft mean hgt, ASCE 7-02, CLOSED bldg, not located within 4.50 ft from roof edge, CAT II, EXP B, wind TC DL=5.0 psf, wind BC DL=5.0 psf. Iw=1.00 GCpi(+/-)=0.18

Wind reactions based on MWFRS pressures.

Right end vertical not exposed to wind pressure.

In lieu of structural panels use purlins to brace all flat TC @ 24" OC.

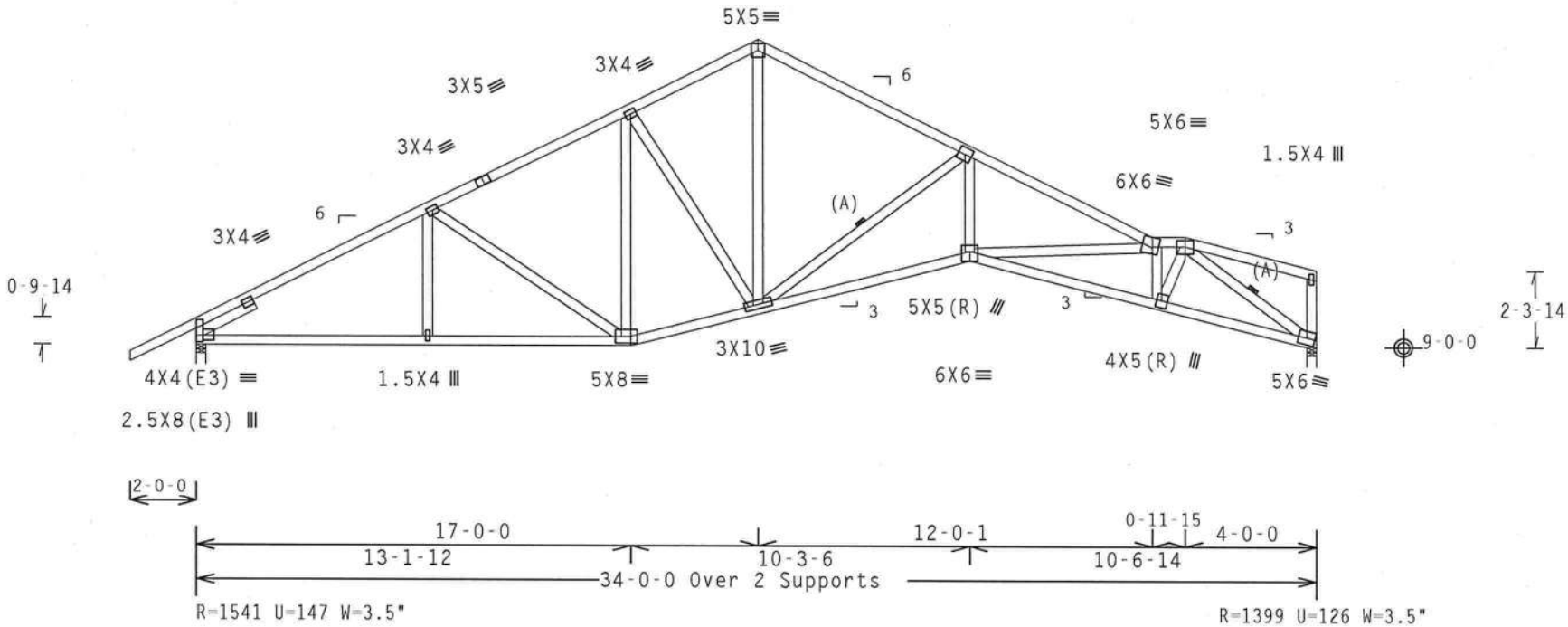

Design Crit: TPI-2002(STD)/FBC
Cq/RT=1.00(1.25)/0(0)

PLT TYP. Wave | 7.36.042 | QTY:1 | FL/-/4/-/-/R/- | Scale =.1875"/Ft.

ALPINE
ITW Building Components Group, Inc.
Haines City, FL 33844
FL Certificate of Authorization # 0 278

WARNING TRUSSES REQUIRE EXTREME CARE IN FABRICATION, HANDLING, SHIPPING, INSTALLING AND BRACING. REFER TO BCSI (BUILDING COMPONENT SAFETY INFORMATION), PUBLISHED BY TPI (TRUSS PLATE INSTITUTE, 218 NORTH LEE STREET, SUITE 312, ALEXANDRIA, VA, 22314) AND WTCA (WOOD TRUSS COUNCIL OF AMERICA, 6300 ENTERPRISE LANE, MADISON, WI 53719) FOR SAFETY PRACTICES PRIOR TO PERFORMING THESE FUNCTIONS. UNLESS OTHERWISE INDICATED TOP CHORD SHALL HAVE PROPERLY ATTACHED STRUCTURAL PANELS AND BOTTOM CHORD SHALL HAVE A PROPERLY ATTACHED RIGID CEILING.

IMPORTANT FURNISH A COPY OF THIS DESIGN TO THE INSTALLATION CONTRACTOR. ITW BCG, INC. SHALL NOT BE RESPONSIBLE FOR ANY DEVIATION FROM THIS DESIGN; ANY FAILURE TO BUILD THE TRUSS IN CONFORMANCE WITH TPI; OR FABRICATING, HANDLING, SHIPPING, INSTALLING & BRACING OF TRUSSES. DESIGN CONFORMS WITH APPLICABLE PROVISIONS OF NDS (NATIONAL DESIGN SPEC, BY AF&PA) AND TPI. ITW BCG CONNECTOR PLATES ARE MADE OF 20/18/16GA (W,H/SS/K) ASTM A653 GRADE 40/60 (W, K/H,SS) GALV. STEEL. APPLY PLATES TO EACH FACE OF TRUSS AND, UNLESS OTHERWISE LOCATED ON THIS DESIGN, POSITION PER DRAWINGS 160A-2. ANY INSPECTION OF PLATES FOLLOWED BY (1) SHALL BE PER ANNEX A3 OF TPI1-2002 SEC.3. A SEAL ON THIS DRAWING INDICATES ACCEPTANCE OF PROFESSIONAL ENGINEERING RESPONSIBILITY SOLELY FOR THE TRUSS COMPONENT DESIGN SHOWN. THE SUITABILITY AND USE OF THIS COMPONENT FOR ANY BUILDING IS THE RESPONSIBILITY OF THE BUILDING DESIGNER PER ANSI/TPI 1 SEC. 2.

DOUGLAS FLEMING LICENSE No. 66648 STATE OF FLORIDA PROFESSIONAL ENGINEER

04 '07

TC LL	20.0 PSF	REF R8228- 32355
TC DL	10.0 PSF	DATE 12/04/07
BC DL	10.0 PSF	DRW HCUSR8228 07338103
BC LL	0.0 PSF	HC-ENG JB/DF
TOT.LD.	40.0 PSF	SEQN- 64538
DUR.FAC.	1.25	FROM AH
SPACING	24.0"	JREF- 1TD08228Z01

THIS DWG PREPARED FROM COMPUTER INPUT (LOADS & DIMENSIONS) SUBMITTED BY TRUSS MFR.

Top chord 2x4 SP #2 Dense
Bot chord 2x4 SP #2 Dense
Webs 2x4 SP #3 :W10 2x4 SP #2 Dense:
:Lt Slider 2x4 SP #3: BLOCK LENGTH = 2.008'

Calculated horizontal deflection is 0.11" due to live load and 0.18" due to dead load.

(A) Continuous lateral bracing equally spaced on member.

110 mph wind, 15.00 ft mean hgt, ASCE 7-02, CLOSED bldg, not located within 4.50 ft from roof edge, CAT II, EXP B, wind TC DL=5.0 psf, wind BC DL=5.0 psf. Iw=1.00 GCpi(+/-)=0.18

Wind reactions based on MWFRS pressures.

Right end vertical not exposed to wind pressure.

Deflection meets L/240 live and L/180 total load. Creep increase factor for dead load is 1.50.

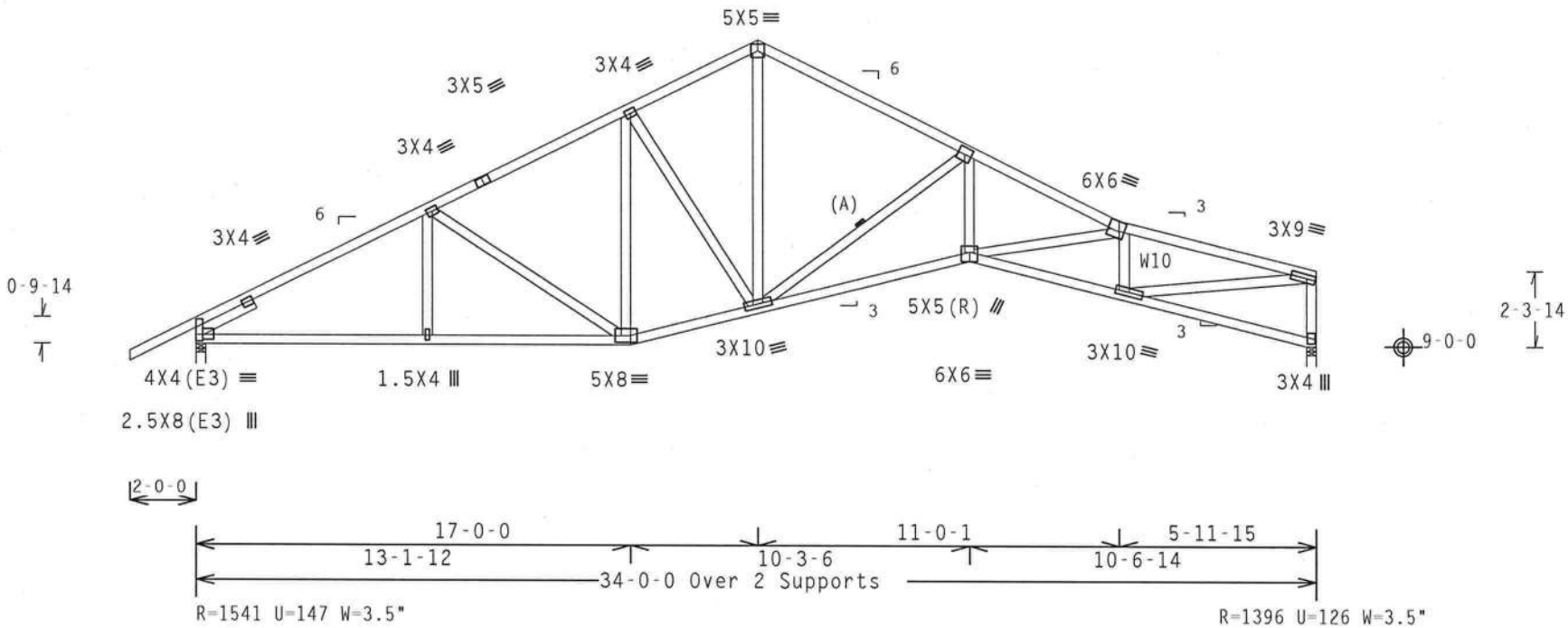

Design Crit: TPI-2002(STD)/FBC
Cq/RT=1.00(1.25)/0(0)

PLT TYP. Wave | 7.36.04 | QTY:1 | FL/-/4/-/-/R/- | Scale =.1875"/Ft.

WARNING TRUSSES REQUIRE EXTREME CARE IN FABRICATION, HANDLING, SHIPPING, INSTALLING AND BRACING. REFER TO BCSI (BUILDING COMPONENT SAFETY INFORMATION), PUBLISHED BY TPI (TRUSS PLATE INSTITUTE, 218 NORTH LEE STREET, SUITE 312, ALEXANDRIA, VA, 22314) AND WTCA (WOOD TRUSS COUNCIL OF AMERICA, 6300 ENTERPRISE LANE, MADISON, WI 53719) FOR SAFETY PRACTICES PRIOR TO PERFORMING THESE FUNCTIONS. UNLESS OTHERWISE INDICATED TOP CHORD SHALL HAVE PROPERLY ATTACHED STRUCTURAL PANELS AND BOTTOM CHORD SHALL HAVE A PROPERLY ATTACHED RIGID CEILING.

IMPORTANTFURNISH A COPY OF THIS DESIGN TO THE INSTALLATION CONTRACTOR. ITW BCG, INC. SHALL NOT BE RESPONSIBLE FOR ANY DEVIATION FROM THIS DESIGN; ANY FAILURE TO BUILD THE TRUSS IN COMFORMANCE WITH TPI; OR FABRICATING, HANDLING, SHIPPING, INSTALLING & BRACING OF TRUSSES.
DESIGN CONFORMS WITH APPLICABLE PROVISIONS OF NDS (NATIONAL DESIGN SPEC. BY AF&PA) AND TPI. ITW BCG CONNECTOR PLATES ARE MADE OF 20/18/16GA (W,H/SS/K) ASTM A653 GRADE 40/60 (W, K/H,SS) GALV. STEEL. APPLY PLATES TO EACH FACE OF TRUSS AND, UNLESS OTHERWISE LOCATED ON THIS DESIGN, POSITION PER DRAWINGS 160A-Z. ANY INSPECTION OF PLATES FOLLOWED BY (1) SHALL BE PER ANNEX A3 OF TPI1-2002 SEC.3. A SEAL ON THIS DRAWING INDICATES ACCEPTANCE OF PROFESSIONAL ENGINEERING RESPONSIBILITY SOLELY FOR THE TRUSS COMPONENT DESIGN SHOWN. THE SUITABILITY AND USE OF THIS COMPONENT FOR ANY BUILDING IS THE RESPONSIBILITY OF THE BUILDING DESIGNER PER ANSI/TPI 1 SEC. 2.

ALPINE
ITW Building Components Group, Inc.
Haines City, FL 33844
FL Certificate of Authorization #0 278

DOUGLAS FLEMING LICENSE No. 66648 STATE OF FLORIDA PROFESSIONAL ENGINEER
DEC 04 '07

TC LL	20.0 PSF	REF R8228- 32356
TC DL	10.0 PSF	DATE 12/04/07
BC DL	10.0 PSF	DRW HCUSR8228 07338104
BC LL	0.0 PSF	HC-ENG JB/DF
TOT.LD.	40.0 PSF	SEQN- 64543
DUR.FAC.	1.25	FROM AH
SPACING	24.0"	JREF- 1TD08228Z01

THIS DWG PREPARED FROM COMPUTER INPUT (LOADS & DIMENSIONS) SUBMITTED BY TRUSS MFR.

Top chord 2x4 SP #2 Dense
Bot chord 2x4 SP #2 Dense

Deflection meets L/240 live and L/180 total load. Creep increase factor for dead load is 1.50.

110 mph wind, 15.00 ft mean hgt, ASCE 7-02, PART._ENC. bldg, Located anywhere in roof, CAT II, EXP B, wind TC DL=5.0 psf, wind BC DL=5.0 psf. Iw=1.00 GCpi(+/-)=0.55

Wind reactions based on MWFRS pressures.

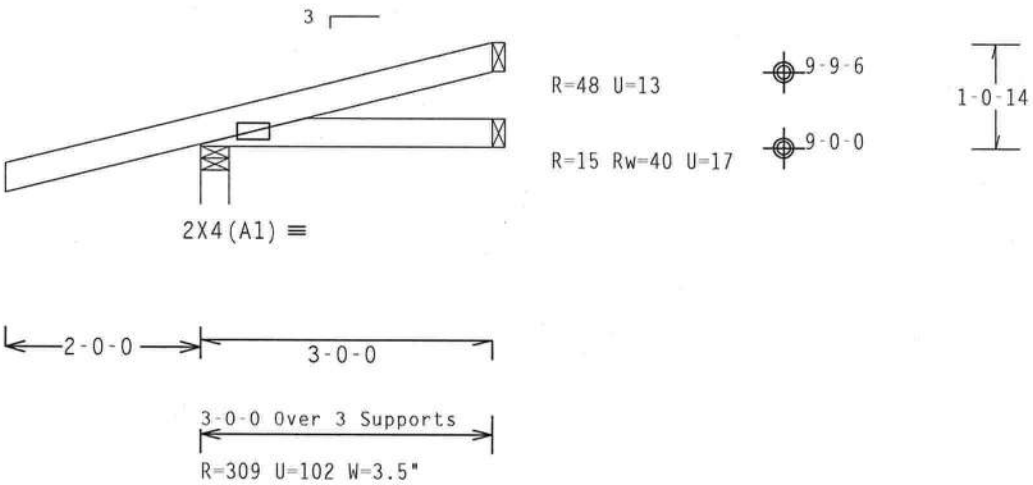

Design Crit: TPI-2002(STD)/FBC
Cq/RT=1.00(1.25)/0(0) 7.36.042

PLT TYP. Wave

QTY:1 FL/-/4/-/-/R/- Scale =.5"/Ft.

WARNING TRUSSES REQUIRE EXTREME CARE IN FABRICATION, HANDLING, SHIPPING, INSTALLING AND BRACING. REFER TO BCSI (BUILDING COMPONENT SAFETY INFORMATION), PUBLISHED BY TPI (TRUSS PLATE INSTITUTE, 218 NORTH LEE STREET, SUITE 312, ALEXANDRIA, VA. 22314) AND WTCA (WOOD TRUSS COUNCIL OF AMERICA, 6300 ENTERPRISE LANE, MADISON, WI 53719) FOR SAFETY PRACTICES PRIOR TO PERFORMING THESE FUNCTIONS. UNLESS OTHERWISE INDICATED TOP CHORD SHALL HAVE PROPERLY ATTACHED STRUCTURAL PANELS AND BOTTOM CHORD SHALL HAVE A PROPERLY ATTACHED RIGID CEILING.

IMPORTANTFURNISH A COPY OF THIS DESIGN TO THE INSTALLATION CONTRACTOR. ITW BCG, INC. SHALL NOT BE RESPONSIBLE FOR ANY DEVIATION FROM THIS DESIGN; ANY FAILURE TO BUILD THE TRUSS IN CONFORMANCE WITH TPI; OR FABRICATING, HANDLING, SHIPPING, INSTALLING & BRACING OF TRUSSES.
DESIGN CONFORMS WITH APPLICABLE PROVISIONS OF NDS (NATIONAL DESIGN SPEC. BY AF&PA) AND TPI. ITW BCG CONNECTOR PLATES ARE MADE OF 20/18/16GA (W,H/SS/K) ASTM A653 GRADE 40/60 (W, K/H,SS) GALV. STEEL. APPLY PLATES TO EACH FACE OF TRUSS AND, UNLESS OTHERWISE LOCATED ON THIS DESIGN, POSITION PER DRAWINGS 160A-Z. ANY INSPECTION OF PLATES FOLLOWED BY (1) SHALL BE PER ANNEX A3 OF TPI1-2002 SEC.3. A SEAL ON THIS DRAWING INDICATES ACCEPTANCE OF PROFESSIONAL ENGINEERING RESPONSIBILITY SOLELY FOR THE TRUSS COMPONENT DESIGN SHOWN. THE SUITABILITY AND USE OF THIS COMPONENT FOR ANY BUILDING IS THE RESPONSIBILITY OF THE BUILDING DESIGNER PER ANSI/TPI 1 SEC. 2.

DOUGLAS FLEMING LICENSE No. 66648 STATE OF FLORIDA PROFESSIONAL ENGINEER

DEC 04 '07

TC LL	20.0 PSF	REF R8228- 32357
TC DL	10.0 PSF	DATE 12/04/07
BC DL	10.0 PSF	DRW HCUSR8228 07338091
BC LL	0.0 PSF	HC-ENG JB/DF *
TOT.LD.	40.0 PSF	SEQN- 64335
DUR.FAC.	1.25	FROM AH
SPACING	24.0"	JREF- 1TD08228Z01

ALPINE
ITW Building Components Group, Inc.
Haines City, FL 33844
FL Certificate of Authorization # 0 278

THIS DWG PREPARED FROM COMPUTER INPUT (LOADS & DIMENSIONS) SUBMITTED BY TRUSS MFR.

Top chord 2x4 SP #2 Dense
Bot chord 2x4 SP #2 Dense

Deflection meets L/240 live and L/180 total load. Creep increase factor for dead load is 1.50.

110 mph wind, 15.00 ft mean hgt, ASCE 7-02, PART._ENC. bldg, not located within 4.50 ft from roof edge, CAT II, EXP B, wind TC DL=5.0 psf, wind BC DL=5.0 psf. Iw=1.00 GCpi(+/-)=0.55

Wind reactions based on MWFRS pressures.

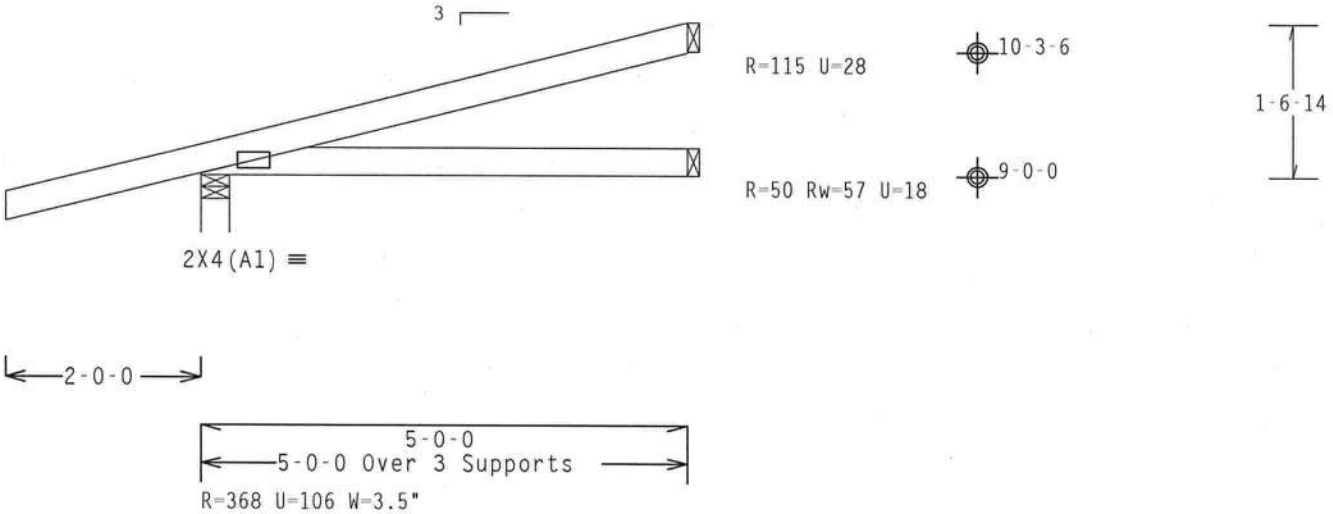

Design Crit: TPI-2002(STD)/FBC
Cq/RT=1.00(1.25)/0(0) 7.36.042

PLT TYP. Wave

QTY:1 FL/-/4/-/-/R/-

Scale =.5"/Ft.

ALPINE

ITW Building Components Group, Inc.
Haines City, FL 33844
FL Certificate of Authorization # 0 278

WARNING TRUSSES REQUIRE EXTREME CARE IN FABRICATION, HANDLING, SHIPPING, INSTALLING AND BRACING. REFER TO BCSI (BUILDING COMPONENT SAFETY INFORMATION), PUBLISHED BY TPI (TRUSS PLATE INSTITUTE, 218 NORTH LEE STREET, SUITE 312, ALEXANDRIA, VA. 22314) AND WTCA (WOOD TRUSS COUNCIL OF AMERICA, 6300 ENTERPRISE LANE, MADISON, WI 53719) FOR SAFETY PRACTICES PRIOR TO PERFORMING THESE FUNCTIONS. UNLESS OTHERWISE INDICATED TOP CHORD SHALL HAVE PROPERLY ATTACHED STRUCTURAL PANELS AND BOTTOM CHORD SHALL HAVE A PROPERLY ATTACHED RIGID CEILING.

IMPORTANTFURNISH A COPY OF THIS DESIGN TO THE INSTALLATION CONTRACTOR. ITW BCG, INC. SHALL NOT BE RESPONSIBLE FOR ANY DEVIATION FROM THIS DESIGN; ANY FAILURE TO BUILD THE TRUSS IN COMFORMANCE WITH TPI; OR FABRICATING, HANDLING, SHIPPING, INSTALLING & BRACING OF TRUSSES.
DESIGN CONFORMS WITH APPLICABLE PROVISIONS OF NDS (NATIONAL DESIGN SPEC. BY AF&PA) AND TPI. ITW BCG CONNECTOR PLATES ARE MADE OF 20/18/16GA (W,H/SS/K) ASTM A653 GRADE 40/60 (W, K/H,SS) GALV. STEEL. APPLY PLATES TO EACH FACE OF TRUSS AND, UNLESS OTHERWISE LOCATED ON THIS DESIGN, POSITION PER DRAWINGS 160A-Z. ANY INSPECTION OF PLATES FOLLOWED BY (1) SHALL BE PER ANNEX A3 OF TPI1-2002 SEC.3. A SEAL ON THIS DRAWING INDICATES ACCEPTANCE OF PROFESSIONAL ENGINEERING RESPONSIBILITY SOLELY FOR THE TRUSS COMPONENT DESIGN SHOWN. THE SUITABILITY AND USE OF THIS COMPONENT FOR ANY BUILDING IS THE RESPONSIBILITY OF THE BUILDING DESIGNER PER ANSI/TPI 1 SEC. 2.

DOUGLAS FLEMING LICENSE No. 66648 STATE OF FLORIDA PROFESSIONAL ENGINEER

04 '07

TC LL	20.0 PSF	REF R8228- 32358
TC DL	10.0 PSF	DATE 12/04/07
BC DL	10.0 PSF	DRW HCUSR8228 07338092
BC LL	0.0 PSF	HC-ENG JB/DF *
TOT.LD.	40.0 PSF	SEQN- 64340
DUR.FAC.	1.25	FROM AH
SPACING	24.0"	JREF- 1TD08228Z01

THIS DWG PREPARED FROM COMPUTER INPUT (LOADS & DIMENSIONS) SUBMITTED BY TRUSS MFR.

Top chord 2x4 SP #2 Dense
Bot chord 2x4 SP #2 Dense

Deflection meets L/240 live and L/180 total load. Creep increase factor for dead load is 1.50.

110 mph wind, 15.00 ft mean hgt, ASCE 7-02, PART._ENC. bldg, not located within 4.50 ft from roof edge, CAT II, EXP B, wind TC DL=5.0 psf, wind BC DL=5.0 psf. Iw=1.00 GCpi(+/-)=0.55

Wind reactions based on MWFRS pressures.

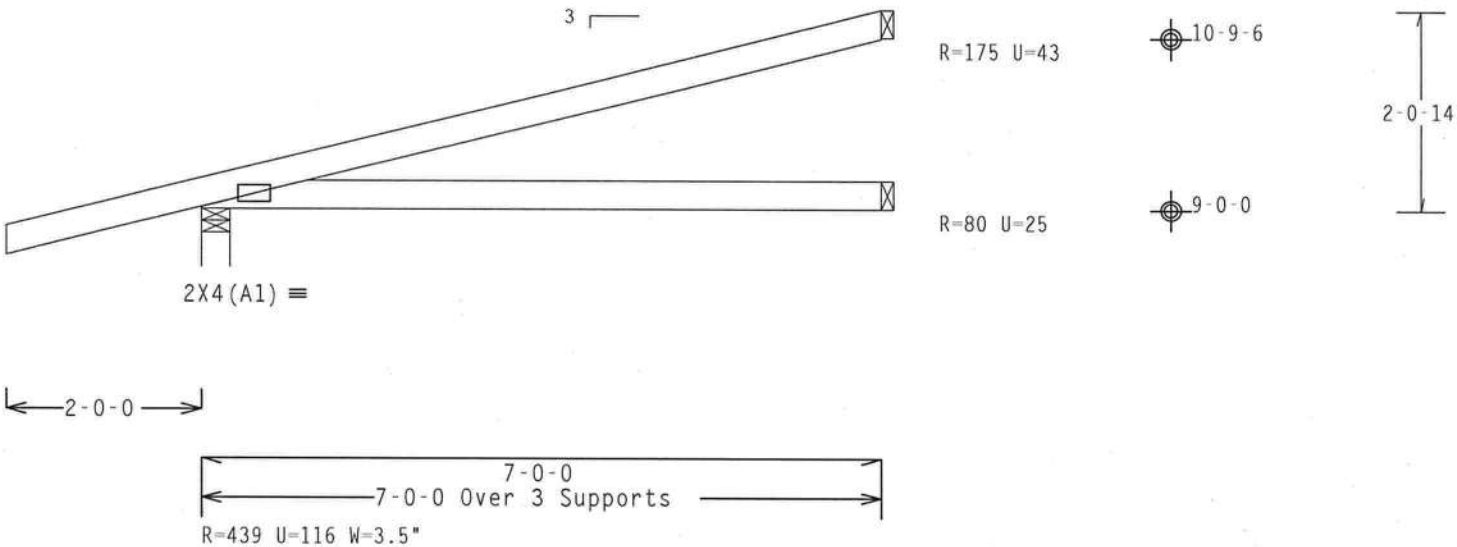

Design Crit: TPI-2002(STD)/FBC
Cq/RT=1.00(1.25)/0(0) 7.36.042

PLT TYP. Wave

QTY:1

FL/-/4/-/-/R/-

Scale =.5"/Ft.

WARNING TRUSSES REQUIRE EXTREME CARE IN FABRICATION, HANDLING, SHIPPING, INSTALLING AND BRACING. REFER TO BCSI (BUILDING COMPONENT SAFETY INFORMATION), PUBLISHED BY TPI (TRUSS PLATE INSTITUTE, 218 NORTH LEE STREET, SUITE 312, ALEXANDRIA, VA, 22314) AND WTCA (WOOD TRUSS COUNCIL OF AMERICA, 6300 ENTERPRISE LANE, MADISON, WI 53719) FOR SAFETY PRACTICES PRIOR TO PERFORMING THESE FUNCTIONS. UNLESS OTHERWISE INDICATED TOP CHORD SHALL HAVE PROPERLY ATTACHED STRUCTURAL PANELS AND BOTTOM CHORD SHALL HAVE A PROPERLY ATTACHED RIGID CEILING.

IMPORTANTFURNISH A COPY OF THIS DESIGN TO THE INSTALLATION CONTRACTOR. ITW BCG, INC. SHALL NOT BE RESPONSIBLE FOR ANY DEVIATION FROM THIS DESIGN; ANY FAILURE TO BUILD THE TRUSS IN CONFORMANCE WITH TPI; OR FABRICATING, HANDLING, SHIPPING, INSTALLING & BRACING OF TRUSSES.
DESIGN CONFORMS WITH APPLICABLE PROVISIONS OF NDS (NATIONAL DESIGN SPEC. BY AF&PA) AND TPI. ITW BCG CONNECTOR PLATES ARE MADE OF 20/18/16GA (W,H/SS/K) ASTM A653 GRADE 40/60 (W, K/H,SS) GALV. STEEL. APPLY PLATES TO EACH FACE OF TRUSS AND, UNLESS OTHERWISE LOCATED ON THIS DESIGN, POSITION PER DRAWINGS 160A-2. ANY INSPECTION OF PLATES FOLLOWED BY (1) SHALL BE PER ANNEX A3 OF TPI1-2002 SEC.3. A SEAL ON THIS DRAWING INDICATES ACCEPTANCE OF PROFESSIONAL ENGINEERING RESPONSIBILITY SOLELY FOR THE TRUSS COMPONENT DESIGN SHOWN. THE SUITABILITY AND USE OF THIS COMPONENT FOR ANY BUILDING IS THE RESPONSIBILITY OF THE BUILDING DESIGNER PER ANSI/TPI 1 SEC. 2.

ALPINE
ITW Building Components Group, Inc.
Haines City, FL 33844
FL Certificate of Authorization # 0 279

DOUGLAS FLEMING LICENSE No 66648 STATE OF FLORIDA PROFESSIONAL ENGINEER

TC LL	20.0 PSF	REF R8228- 32359
TC DL	10.0 PSF	DATE 12/04/07
BC DL	10.0 PSF	DRW HCUSR8228 07338093
BC LL	0.0 PSF	HC-ENG JB/DF *
TOT.LD.	40.0 PSF	SEQN- 64344
DUR.FAC.	1.25	FROM AH
SPACING	24.0"	JREF- 1TD08228Z01

Dec 04 '07

THIS DWG PREPARED FROM COMPUTER INPUT (LOADS & DIMENSIONS) SUBMITTED BY TRUSS MFR.

Top chord 2x4 SP #2 Dense
Bot chord 2x4 SP #2 Dense

Deflection meets L/240 live and L/180 total load. Creep increase factor for dead load is 1.50.

110 mph wind, 15.00 ft mean hgt, ASCE 7-02, PART._ENC. bldg, not located within 4.50 ft from roof edge, CAT II, EXP B, wind TC DL=5.0 psf, wind BC DL=5.0 psf. Iw=1.00 GCpi(+/-)=0.55

Wind reactions based on MWFRS pressures.

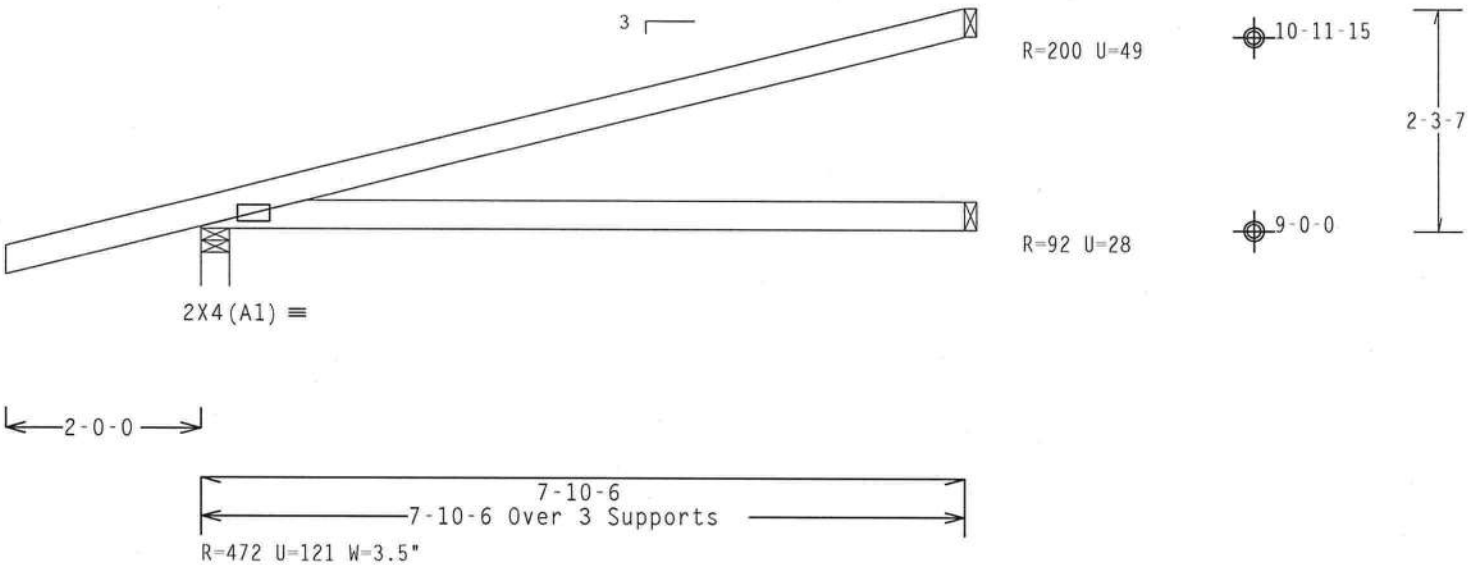

Design Crit: TPI-2002(STD)/FBC
Cq/RT=1.00(1.25)/0(0) 7.36.042

PLT TYP. Wave

QTY:1 FL/-/4/-/-/R/- Scale =.5"/Ft.

WARNING TRUSSES REQUIRE EXTREME CARE IN FABRICATION, HANDLING, SHIPPING, INSTALLING AND BRACING. REFER TO BCSI (BUILDING COMPONENT SAFETY INFORMATION), PUBLISHED BY TPI (TRUSS PLATE INSTITUTE, 218 NORTH LEE STREET, SUITE 312, ALEXANDRIA, VA, 22314) AND WTCA (WOOD TRUSS COUNCIL OF AMERICA, 6300 ENTERPRISE LANE, MADISON, WI 53719) FOR SAFETY PRACTICES PRIOR TO PERFORMING THESE FUNCTIONS. UNLESS OTHERWISE INDICATED TOP CHORD SHALL HAVE PROPERLY ATTACHED STRUCTURAL PANELS AND BOTTOM CHORD SHALL HAVE A PROPERLY ATTACHED RIGID CEILING.

IMPORTANTFURNISH A COPY OF THIS DESIGN TO THE INSTALLATION CONTRACTOR. ITW BCG, INC. SHALL NOT BE RESPONSIBLE FOR ANY DEVIATION FROM THIS DESIGN; ANY FAILURE TO BUILD THE TRUSS IN COMFORMANCE WITH TPI; OR FABRICATING, HANDLING, SHIPPING, INSTALLING & BRACING OF TRUSSES.
DESIGN CONFORMS WITH APPLICABLE PROVISIONS OF NDS (NATIONAL DESIGN SPEC. BY AF&PA) AND TPI. ITW BCG CONNECTOR PLATES ARE MADE OF 20/18/16GA (W,H/SS/K) ASTM A653 GRADE 40/60 (W, K/H,SS) GALV. STEEL. APPLY PLATES TO EACH FACE OF TRUSS AND, UNLESS OTHERWISE LOCATED ON THIS DESIGN, POSITION PER DRAWINGS 160A-Z. ANY INSPECTION OF PLATES FOLLOWED BY (1) SHALL BE PER ANNEX A3 OF TPI1-2002 SEC.3. A SEAL ON THIS DRAWING INDICATES ACCEPTANCE OF PROFESSIONAL ENGINEERING RESPONSIBILITY SOLELY FOR THE TRUSS COMPONENT DESIGN SHOWN. THE SUITABILITY AND USE OF THIS COMPONENT FOR ANY BUILDING IS THE RESPONSIBILITY OF THE BUILDING DESIGNER PER ANSI/TPI 1 SEC. 2.

ALPINE
ITW Building Components Group, Inc.
Haines City, FL 33844
FL Certificate of Authorization # 0 278

DOUGLAS FLEMING LICENSE No. 66648 STATE OF FLORIDA PROFESSIONAL ENGINEER
'04 '07

TC LL	20.0 PSF	REF R8228- 32360
TC DL	10.0 PSF	DATE 12/04/07
BC DL	10.0 PSF	DRW HCUSR8228 07338094
BC LL	0.0 PSF	HC-ENG JB/DF *
TOT.LD.	40.0 PSF	SEQN- 64353
DUR.FAC.	1.25	FROM AH
SPACING	24.0"	JREF- 1TD08228Z01

THIS DWG PREPARED FROM COMPUTER INPUT (LOADS & DIMENSIONS) SUBMITTED BY TRUSS MFR.

Top chord 2x4 SP #2 Dense
Bot chord 2x4 SP #2 Dense

Deflection meets L/240 live and L/180 total load. Creep increase factor for dead load is 1.50.

110 mph wind, 15.00 ft mean hgt, ASCE 7-02, PART._ENC. bldg, Located anywhere in roof, CAT II, EXP B, wind TC DL=5.0 psf, wind BC DL=5.0 psf. Iw=1.00 GCpi(+/-)=0.55

Wind reactions based on MWFRS pressures.

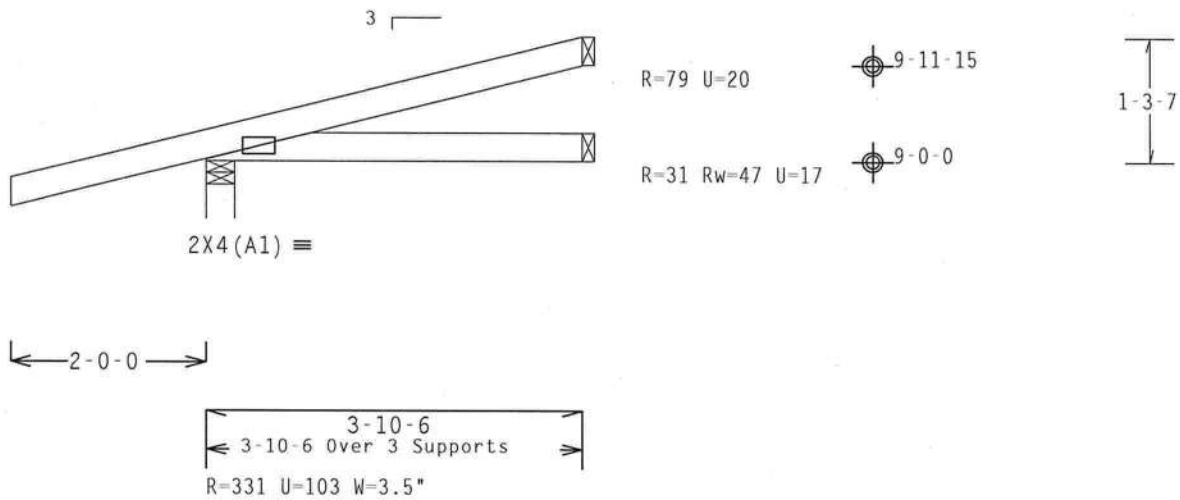

Design Crit: TPI-2002(STD)/FBC
Cq/RT=1.00(1.25)/0(0) 7.36.04

PLT TYP. Wave

QTY:1 FL/-/4/-/-/R/- Scale =.5"/Ft.

WARNING TRUSSES REQUIRE EXTREME CARE IN FABRICATION, HANDLING, SHIPPING, INSTALLING AND BRACING. REFER TO BCSI (BUILDING COMPONENT SAFETY INFORMATION), PUBLISHED BY TPI (TRUSS PLATE INSTITUTE, 218 NORTH LEE STREET, SUITE 312, ALEXANDRIA, VA, 22314) AND WTCA (WOOD TRUSS COUNCIL OF AMERICA, 6300 ENTERPRISE LANE, MADISON, WI 53719) FOR SAFETY PRACTICES PRIOR TO PERFORMING THESE FUNCTIONS. UNLESS OTHERWISE INDICATED TOP CHORD SHALL HAVE PROPERLY ATTACHED STRUCTURAL PANELS AND BOTTOM CHORD SHALL HAVE A PROPERLY ATTACHED RIGID CEILING.

IMPORTANTFURNISH A COPY OF THIS DESIGN TO THE INSTALLATION CONTRACTOR. ITW BCG, INC. SHALL NOT BE RESPONSIBLE FOR ANY DEVIATION FROM THIS DESIGN; ANY FAILURE TO BUILD THE TRUSS IN COMFORMANCE WITH TPI; OR FABRICATING, HANDLING, SHIPPING, INSTALLING & BRACING OF TRUSSES.
DESIGN CONFORMS WITH APPLICABLE PROVISIONS OF NDS (NATIONAL DESIGN SPEC. BY AF&PA) AND TPI. ITW BCG CONNECTOR PLATES ARE MADE OF 20/18/16GA (W,H/SS/K) ASTM A653 GRADE 40/60 (W, K/H,SS) GALV. STEEL. APPLY PLATES TO EACH FACE OF TRUSS AND, UNLESS OTHERWISE LOCATED ON THIS DESIGN, POSITION PER DRAWINGS 160A-Z. ANY INSPECTION OF PLATES FOLLOWED BY (1) SHALL BE PER ANNEX A3 OF TPI1-2002 SEC.3. A SEAL ON THIS DRAWING INDICATES ACCEPTANCE OF PROFESSIONAL ENGINEERING RESPONSIBILITY SOLELY FOR THE TRUSS COMPONENT DESIGN SHOWN. THE SUITABILITY AND USE OF THIS COMPONENT FOR ANY BUILDING IS THE RESPONSIBILITY OF THE BUILDING DESIGNER PER ANSI/TPI 1 SEC. 2.

ALPINE
ITW Building Components Group, Inc.
Haines City, FL 33844
FL Certificate of Authorization # 0 278

DOUGLAS FLEMING LICENSE No. 66648 STATE OF FLORIDA PROFESSIONAL ENGINEER
DEC 04 '07

TC LL	20.0 PSF	REF R8228- 32361
TC DL	10.0 PSF	DATE 12/04/07
BC DL	10.0 PSF	DRW HCUSR8228 07338095
BC LL	0.0 PSF	HC-ENG JB/DF *
TOT.LD.	40.0 PSF	SEQN- 64358
DUR.FAC.	1.25	FROM AH
SPACING	24.0"	JREF- 1TD08228Z01

THIS DWG PREPARED FROM COMPUTER INPUT (LOADS & DIMENSIONS) SUBMITTED BY TRUSS MFR.

Top chord 2x4 SP #2 Dense
Bot chord 2x4 SP #2 Dense
:Lt Slider 2x4 SP #3: BLOCK LENGTH = 1.500'

Deflection meets L/240 live and L/180 total load. Creep increase factor for dead load is 1.50.

110 mph wind, 15.00 ft mean hgt, ASCE 7-02, PART._ENC. bldg, Located anywhere in roof, CAT II, EXP B, wind TC DL=5.0 psf, wind BC DL=5.0 psf. Iw=1.00 GCpi(+/-)=0.55

Wind reactions based on MWFRS pressures.

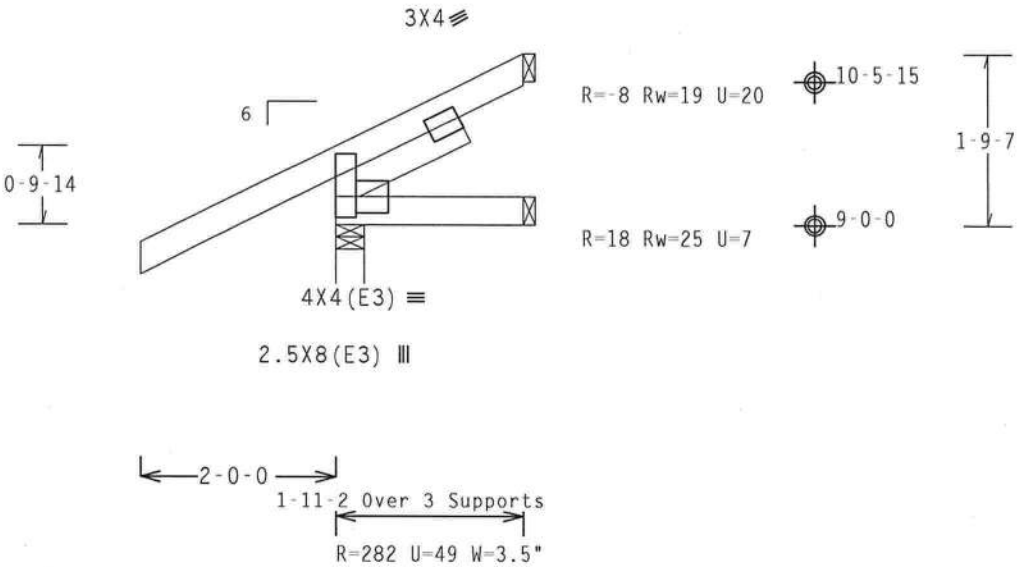

Design Crit: TPI-2002(STD)/FBC
Cq/RT=1.00(1.25)/0(0) 7.36.042 QTY:1 FL/-/4/-/-/R/- Scale =.5"/Ft.

PLT TYP. Wave

ALPINE
ITW Building Components Group, Inc.
Haines City, FL 33844
FL Certificate of Authorization #0 278

WARNING TRUSSES REQUIRE EXTREME CARE IN FABRICATION, HANDLING, SHIPPING, INSTALLING AND BRACING. REFER TO BCSI (BUILDING COMPONENT SAFETY INFORMATION), PUBLISHED BY TPI (TRUSS PLATE INSTITUTE, 218 NORTH LEE STREET, SUITE 312, ALEXANDRIA, VA, 22314) AND WTCA (WOOD TRUSS COUNCIL OF AMERICA, 6300 ENTERPRISE LANE, MADISON, WI 53719) FOR SAFETY PRACTICES PRIOR TO PERFORMING THESE FUNCTIONS. UNLESS OTHERWISE INDICATED TOP CHORD SHALL HAVE PROPERLY ATTACHED STRUCTURAL PANELS AND BOTTOM CHORD SHALL HAVE A PROPERLY ATTACHED RIGID CEILING.

IMPORTANTFURNISH A COPY OF THIS DESIGN TO THE INSTALLATION CONTRACTOR. ITW BCG, INC. SHALL NOT BE RESPONSIBLE FOR ANY DEVIATION FROM THIS DESIGN; ANY FAILURE TO BUILD THE TRUSS IN COMFORMANCE WITH TPI; OR FABRICATING, HANDLING, SHIPPING, INSTALLING & BRACING OF TRUSSES. DESIGN CONFORMS WITH APPLICABLE PROVISIONS OF NDS (NATIONAL DESIGN SPEC, BY AF&PA) AND TPI. ITW BCG CONNECTOR PLATES ARE MADE OF 20/18/16GA (W,H/SS/K) ASTM A653 GRADE 40/60 (W, K/H,SS) GALV. STEEL. APPLY PLATES TO EACH FACE OF TRUSS AND, UNLESS OTHERWISE LOCATED ON THIS DESIGN, POSITION PER DRAWINGS 160A-Z. ANY INSPECTION OF PLATES FOLLOWED BY (1) SHALL BE PER ANNEX A3 OF TPI1-2002 SEC.3. A SEAL ON THIS DRAWING INDICATES ACCEPTANCE OF PROFESSIONAL ENGINEERING RESPONSIBILITY SOLELY FOR THE TRUSS COMPONENT DESIGN SHOWN. THE SUITABILITY AND USE OF THIS COMPONENT FOR ANY BUILDING IS THE RESPONSIBILITY OF THE BUILDING DESIGNER PER ANSI/TPI 1 SEC. 2.

DOUGLAS FLEMING LICENSE No. 66648 STATE OF FLORIDA PROFESSIONAL ENGINEER

Dec 04 '07

TC LL	20.0 PSF	REF	R8228- 32362
TC DL	10.0 PSF	DATE	12/04/07
BC DL	10.0 PSF	DRW	HCUSR8228 07338105
BC LL	0.0 PSF	HC-ENG	JB/DF
TOT.LD.	40.0 PSF	SEQN-	64381
DUR.FAC.	1.25	FROM	AH
SPACING	24.0"	JREF-	1TD08228Z01

THIS DWG PREPARED FROM COMPUTER INPUT (LOADS & DIMENSIONS) SUBMITTED BY TRUSS MFR.

Top chord 2x4 SP #2 Dense
Bot chord 2x4 SP #2 Dense
:Lt Slider 2x4 SP #3: BLOCK LENGTH = 1.128'

Deflection meets L/240 live and L/180 total load. Creep increase factor for dead load is 1.50.

110 mph wind, 15.00 ft mean hgt, ASCE 7-02, PART._ENC. bldg, Located anywhere in roof, CAT II, EXP B, wind TC DL=5.0 psf, wind BC DL=5.0 psf. Iw=1.00 GCpi(+/-)=0.55

Wind reactions based on MWFRS pressures.

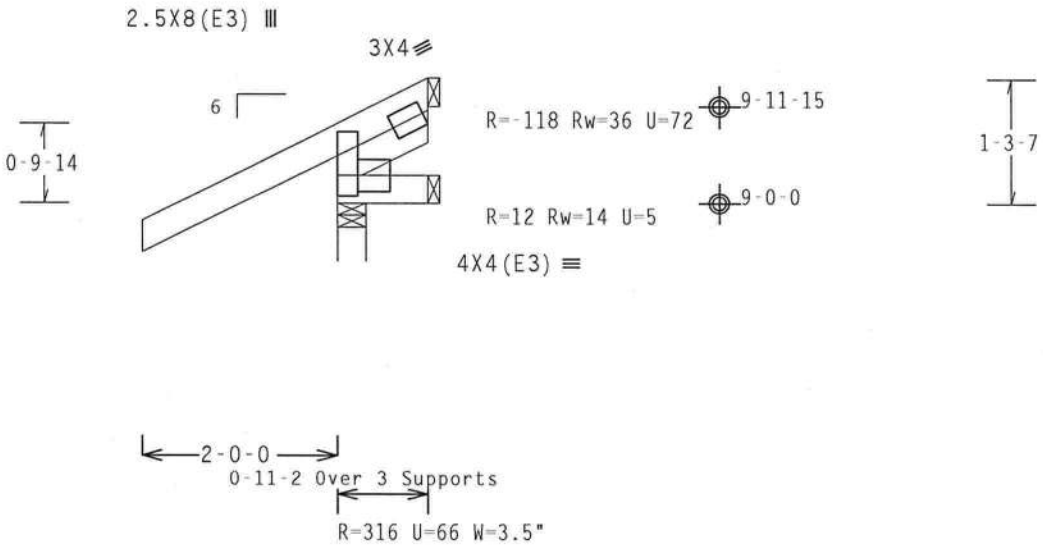

Design Crit: TPI-2002(STD)/FBC
Cq/RT=1.00(1.25)/0(0) 7.36.0424 QTY:1 FL/-/4/-/-/R/- Scale =.5"/Ft.

PLT TYP. Wave

ALPINE
ITW Building Components Group, Inc.
Haines City, FL 33844
Fl Certificate of Authorization #0279

WARNING TRUSSES REQUIRE EXTREME CARE IN FABRICATION, HANDLING, SHIPPING, INSTALLING AND BRACING. REFER TO BCSI (BUILDING COMPONENT SAFETY INFORMATION), PUBLISHED BY TPI (TRUSS PLATE INSTITUTE, 218 NORTH LEE STREET, SUITE 312, ALEXANDRIA, VA. 22314) AND WTCA (WOOD TRUSS COUNCIL OF AMERICA, 6300 ENTERPRISE LANE, MADISON, WI 53719) FOR SAFETY PRACTICES PRIOR TO PERFORMING THESE FUNCTIONS. UNLESS OTHERWISE INDICATED TOP CHORD SHALL HAVE PROPERLY ATTACHED STRUCTURAL PANELS AND BOTTOM CHORD SHALL HAVE A PROPERLY ATTACHED RIGID CEILING.

IMPORTANTFURNISH A COPY OF THIS DESIGN TO THE INSTALLATION CONTRACTOR. ITW BCG, INC. SHALL NOT BE RESPONSIBLE FOR ANY DEVIATION FROM THIS DESIGN; ANY FAILURE TO BUILD THE TRUSS IN COMFORMANCE WITH TPI; OR FABRICATING, HANDLING, SHIPPING, INSTALLING & BRACING OF TRUSSES. DESIGN CONFORMS WITH APPLICABLE PROVISIONS OF NDS (NATIONAL DESIGN SPEC, BY AF&PA) AND TPI. ITW BCG CONNECTOR PLATES ARE MADE OF 20/18/16GA (W,H/SS/K) ASTM A653 GRADE 40/60 (W, K/H,SS) GALV. STEEL. APPLY PLATES TO EACH FACE OF TRUSS AND, UNLESS OTHERWISE LOCATED ON THIS DESIGN, POSITION PER DRAWINGS 160A-Z. ANY INSPECTION OF PLATES FOLLOWED BY (1) SHALL BE PER ANNEX A3 OF TPI1-2002 SEC.3. A SEAL ON THIS DRAWING INDICATES ACCEPTANCE OF PROFESSIONAL ENGINEERING RESPONSIBILITY SOLELY FOR THE TRUSS COMPONENT DESIGN SHOWN. THE SUITABILITY AND USE OF THIS COMPONENT FOR ANY BUILDING IS THE RESPONSIBILITY OF THE BUILDING DESIGNER PER ANSI/TPI 1 SEC. 2.

DOUGLAS FLEMING LICENSE No. 66648 STATE OF FLORIDA PROFESSIONAL ENGINEER

TC LL	20.0 PSF	REF R8228- 32363
TC DL	10.0 PSF	DATE 12/04/07
BC DL	10.0 PSF	DRW HCUSR8228 07338106
BC LL	0.0 PSF	HC-ENG JB/DF
TOT.LD.	40.0 PSF	SEQN- 64389
DUR.FAC.	1.25	FROM AH
SPACING	24.0"	JREF- 1TD08228Z01

THIS DWG PREPARED FROM COMPUTER INPUT (LOADS & DIMENSIONS) SUBMITTED BY TRUSS MFR.

Top chord 2x4 SP #2 Dense
Bot chord 2x4 SP #2 Dense
Webs 2x4 SP #3 :W3 2x6 SP #2:

Hipjack supports 8-0-0 setback jacks. Jacks up to 7' have no webs. Longer jacks supported to BC.

Deflection meets L/240 live and L/180 total load. Creep increase factor for dead load is 1.50.

++ ANCHORAGE REQ'D TO PREVENT TRUSS FROM SLIPPING OFF BEARING.

110 mph wind, 15.00 ft mean hgt, ASCE 7-02, PART._ENC. bldg, Located anywhere in roof, CAT II, EXP B, wind TC DL=5.0 psf, wind BC DL=5.0 psf. Iw=1.00 GCpi(+/-)=0.55

Wind reactions based on MWFRS pressures.

Right end vertical not exposed to wind pressure.

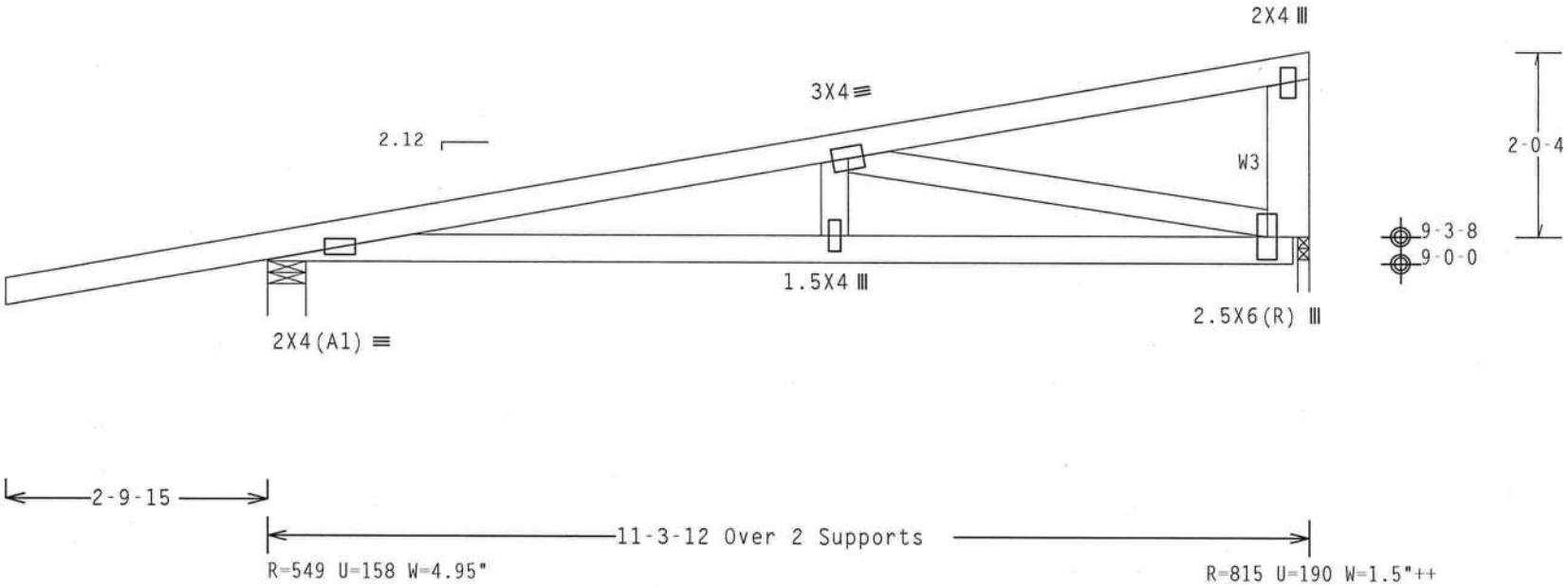

Design Crit: TPI-2002(STD)/FBC
Cq/RT=1.00(1.25)/0(0) 7.36.042 QTY:1 FL/-/4/-/-/R/- Scale =.5"/Ft.

PLT TYP. Wave

WARNING TRUSSES REQUIRE EXTREME CARE IN FABRICATION, HANDLING, SHIPPING, INSTALLING AND BRACING. REFER TO BCSI (BUILDING COMPONENT SAFETY INFORMATION), PUBLISHED BY TPI (TRUSS PLATE INSTITUTE, 218 NORTH LEE STREET, SUITE 312, ALEXANDRIA, VA. 22314) AND WTCA (WOOD TRUSS COUNCIL OF AMERICA, 6300 ENTERPRISE LANE, MADISON, WI 53719) FOR SAFETY PRACTICES PRIOR TO PERFORMING THESE FUNCTIONS. UNLESS OTHERWISE INDICATED TOP CHORD SHALL HAVE PROPERLY ATTACHED STRUCTURAL PANELS AND BOTTOM CHORD SHALL HAVE A PROPERLY ATTACHED RIGID CEILING.

IMPORTANTFURNISH A COPY OF THIS DESIGN TO THE INSTALLATION CONTRACTOR. ITW BCG, INC. SHALL NOT BE RESPONSIBLE FOR ANY DEVIATION FROM THIS DESIGN; ANY FAILURE TO BUILD THE TRUSS IN CONFORMANCE WITH TPI; OR FABRICATING, HANDLING, SHIPPING, INSTALLING & BRACING OF TRUSSES.
DESIGN CONFORMS WITH APPLICABLE PROVISIONS OF NDS (NATIONAL DESIGN SPEC, BY AF&PA) AND TPI. ITW BCG CONNECTOR PLATES ARE MADE OF 20/18/16GA (W,H/SS/K) ASTM A653 GRADE 40/60 (W, K/H,SS) GALV. STEEL. APPLY PLATES TO EACH FACE OF TRUSS AND, UNLESS OTHERWISE LOCATED ON THIS DESIGN, POSITION PER DRAWINGS 160A-Z. ANY INSPECTION OF PLATES FOLLOWED BY (I) SHALL BE PER ANNEX A3 OF TPI1-2002 SEC.3. A SEAL ON THIS DRAWING INDICATES ACCEPTANCE OF PROFESSIONAL ENGINEERING RESPONSIBILITY SOLELY FOR THE TRUSS COMPONENT DESIGN SHOWN. THE SUITABILITY AND USE OF THIS COMPONENT FOR ANY BUILDING IS THE RESPONSIBILITY OF THE BUILDING DESIGNER PER ANSI/TPI 1 SEC. 2.

ALPINE
ITW Building Components Group, Inc.
Haines City, FL 33844
FL Certificate of Authorization #0-279

DOUGLAS FLEMING LICENSE No. 66648 STATE OF FLORIDA PROFESSIONAL ENGINEER
DEC 04 '07

TC LL	20.0 PSF	REF R8228- 32364
TC DL	10.0 PSF	DATE 12/04/07
BC DL	10.0 PSF	DRW HCUSR8228 07338109
BC LL	0.0 PSF	HC-ENG JB/DF
TOT.LD.	40.0 PSF	SEQN- 64495
DUR.FAC.	1.25	FROM AH
SPACING	24.0"	JREF- 1TD08228Z01

Top chord 2x4 SP #2 Dense
Bot chord 2x4 SP #2 Dense
Webs 2x4 SP #3
:Lt Stubbed Wedge 2x4 SP #3:

Wind reactions based on MWFRS pressures.

The following members need concentrated loads at the heel: 2-0-0 span/setback member on the -3-3-1 cant side requires 51 lbs and the 4-0-0 span/setback member on the 2-0-0 cant side requires 26 lbs.

Hipjack supports 7-10-9 setback jacks. Jacks up to 7' have no webs. Longer jacks supported to BC.

Trusses or components connecting to this girder have been modified by the truss designer. The loading for this girder requires verification for accuracy.

110 mph wind, 15.00 ft mean hgt, ASCE 7-02, PART. ENC. bldg, Located anywhere in roof, CAT II, EXP B, wind TC DL=5.0 psf, wind BC DL=5.0 psf.

Right end vertical not exposed to wind pressure.

Sub-fascia beam assumptions: 2-0-0 sub-fascia beam on the -3-3-1 cantilever side. 4-0-0 sub-fascia beam on the 2-0-0 cantilever side.

Deflection meets L/240 live and L/180 total load. Creep increase factor for dead load is 1.50.

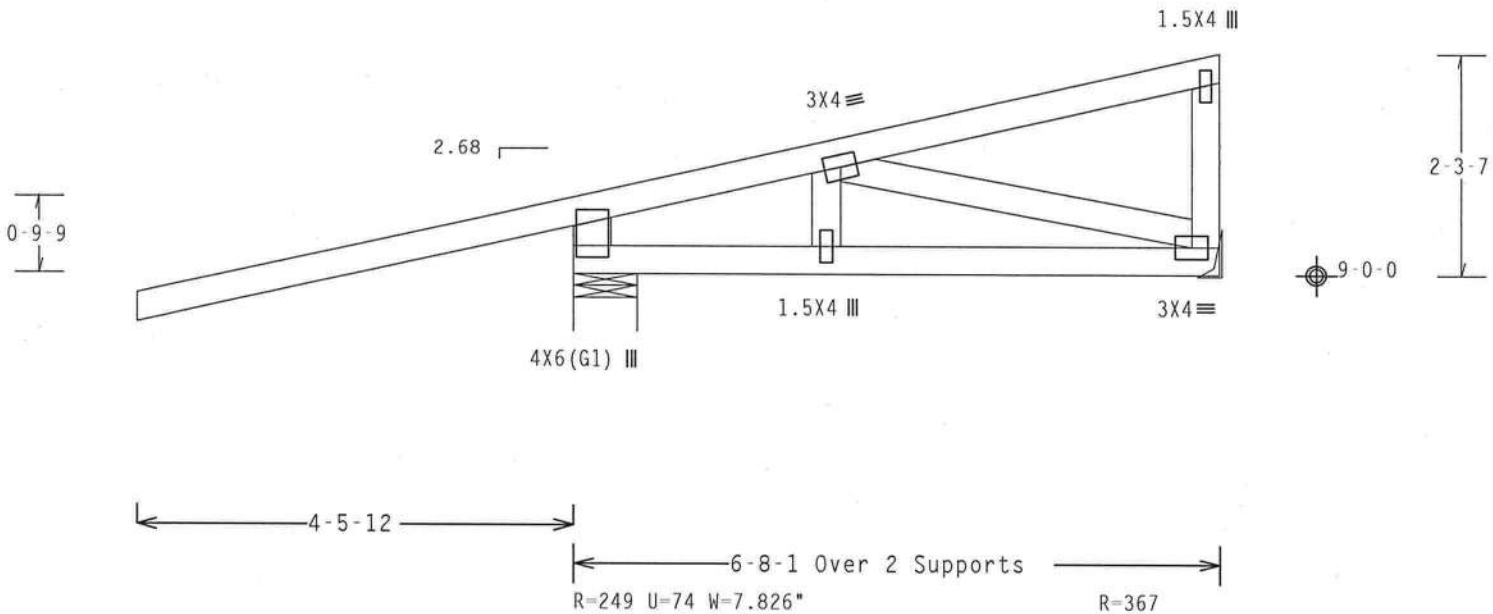

Design Crit: TPI-2002(STD)

PLT TYP. Wave Cq/RT=1.00(1.25)/0(0) 7.37.05 QTY:1 FL/-/4/-/-/R/- Scale =.5"/Ft.

ALPINE
ITW Building Components Group, Inc.
Haines City, FL 33844
FL Certificate of Authorization #0279

WARNING TRUSSES REQUIRE EXTREME CARE IN FABRICATION, HANDLING, SHIPPING, INSTALLING AND BRACING. REFER TO BCSI (BUILDING COMPONENT SAFETY INFORMATION), PUBLISHED BY TPI (TRUSS PLATE INSTITUTE, 218 NORTH LEE STREET, SUITE 312, ALEXANDRIA, VA, 22314) AND WTCA (WOOD TRUSS COUNCIL OF AMERICA, 6300 ENTERPRISE LANE, MADISON, WI 53719) FOR SAFETY PRACTICES PRIOR TO PERFORMING THESE FUNCTIONS. UNLESS OTHERWISE INDICATED TOP CHORD SHALL HAVE PROPERLY ATTACHED STRUCTURAL PANELS AND BOTTOM CHORD SHALL HAVE A PROPERLY ATTACHED RIGID CEILING.

IMPORTANT FURNISH A COPY OF THIS DESIGN TO THE INSTALLATION CONTRACTOR. ITW BCG, INC. SHALL NOT BE RESPONSIBLE FOR ANY DEVIATION FROM THIS DESIGN; ANY FAILURE TO BUILD THE TRUSS IN COMFORMANCE WITH TPI; OR FABRICATING, HANDLING, SHIPPING, INSTALLING & BRACING OF TRUSSES. DESIGN CONFORMS WITH APPLICABLE PROVISIONS OF NDS (NATIONAL DESIGN SPEC. BY AF&PA) AND TPI. ITW BCG CONNECTOR PLATES ARE MADE OF 20/18/16GA (W,H/SS/K) ASTM A653 GRADE 40/60 (W, K/H,SS) GALV. STEEL. APPLY PLATES TO EACH FACE OF TRUSS AND, UNLESS OTHERWISE LOCATED ON THIS DESIGN. POSITION PER DRAWINGS 160A-Z. ANY INSPECTION OF PLATES FOLLOWED BY (1) SHALL BE PER ANNEX A3 OF TPI1-2002 SEC.3. A SEAL ON THIS DRAWING INDICATES ACCEPTANCE OF PROFESSIONAL ENGINEERING RESPONSIBILITY SOLELY FOR THE TRUSS COMPONENT DESIGN SHOWN. THE SUITABILITY AND USE OF THIS COMPONENT FOR ANY BUILDING IS THE RESPONSIBILITY OF THE BUILDING DESIGNER PER ANSI/TPI 1 SEC. 2.

DOUGLAS FLEMING LICENSE No. 66648 STATE OF FLORIDA PROFESSIONAL ENGINEER

DEC 04 '07

TC LL	20.0 PSF	REF	R8228- 32365
TC DL	10.0 PSF	DATE	12/04/07
BC DL	10.0 PSF	DRW	HCUSR8228 07338110
BC LL	0.0 PSF	HC-ENG	JB/DF
TOT.LD.	40.0 PSF	SEQN-	7742 REV
DUR.FAC.	1.25	FROM	AH
SPACING	24.0"	JREF-	1TD08228Z01

THIS DWG PREPARED FROM COMPUTER INPUT (LOADS & DIMENSIONS) SUBMITTED BY TRUSS MFR.

Top chord 2x4 SP #2 Dense
Bot chord 2x4 SP #2 Dense
Webs 2x4 SP #3

Deflection meets L/240 live and L/180 total load. Creep increase factor for dead load is 1.50.

110 mph wind, 15.00 ft mean hgt, ASCE 7-02, PART._ENC. bldg, Located anywhere in roof, CAT II, EXP B, wind TC DL=5.0 psf, wind BC DL=5.0 psf. Iw=1.00 GCpi(+/-)=0.55

Wind reactions based on MWFRS pressures.

Right end vertical not exposed to wind pressure.

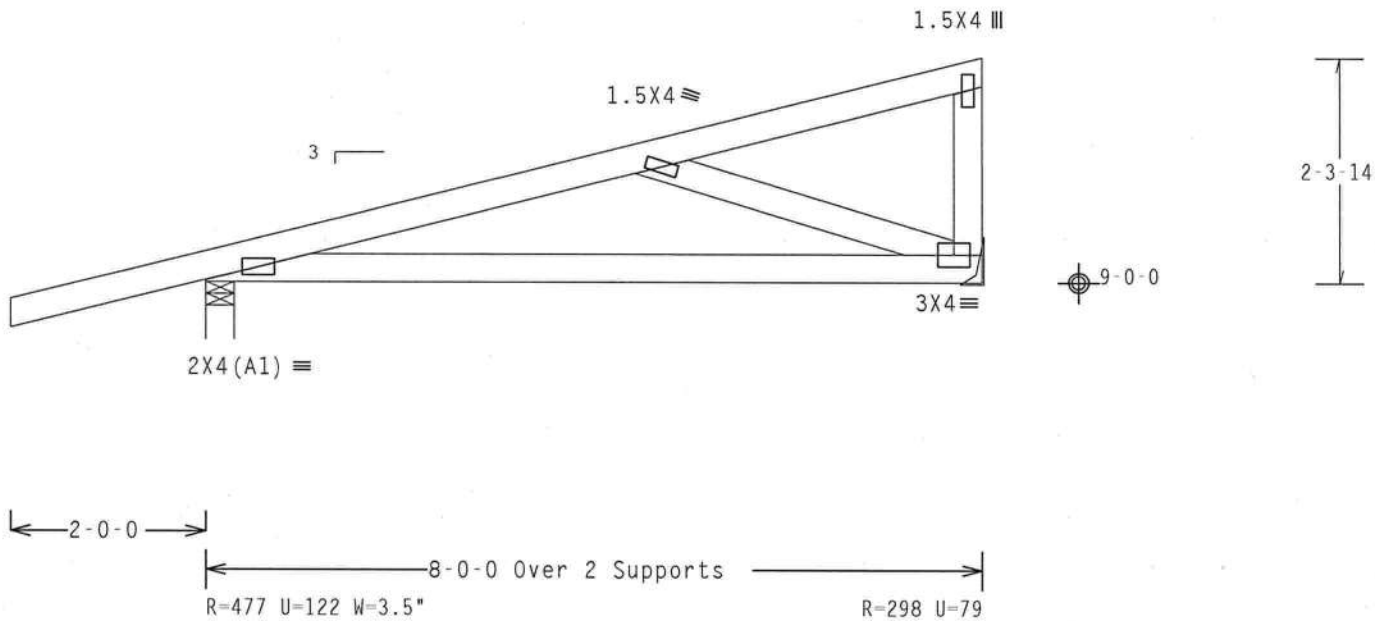

Design Crit: TPI-2002(STD)/FBC
Cq/RT=1.00(1.25)/0(0) 7.36.042 QTY:1 FL/-/4/-/-/R/- Scale =.5"/Ft.

PLT TYP. Wave

WARNING TRUSSES REQUIRE EXTREME CARE IN FABRICATION, HANDLING, SHIPPING, INSTALLING AND BRACING. REFER TO BCSI (BUILDING COMPONENT SAFETY INFORMATION), PUBLISHED BY TPI (TRUSS PLATE INSTITUTE, 218 NORTH LEE STREET, SUITE 312, ALEXANDRIA, VA, 22314) AND WTCA (WOOD TRUSS COUNCIL OF AMERICA, 6300 ENTERPRISE LANE, MADISON, WI 53719) FOR SAFETY PRACTICES PRIOR TO PERFORMING THESE FUNCTIONS. UNLESS OTHERWISE INDICATED TOP CHORD SHALL HAVE PROPERLY ATTACHED STRUCTURAL PANELS AND BOTTOM CHORD SHALL HAVE A PROPERLY ATTACHED RIGID CEILING.

IMPORTANTFURNISH A COPY OF THIS DESIGN TO THE INSTALLATION CONTRACTOR. ITW BCG, INC. SHALL NOT BE RESPONSIBLE FOR ANY DEVIATION FROM THIS DESIGN; ANY FAILURE TO BUILD THE TRUSS IN CONFORMANCE WITH TPI; OR FABRICATING, HANDLING, SHIPPING, INSTALLING & BRACING OF TRUSSES. DESIGN CONFORMS WITH APPLICABLE PROVISIONS OF NDS (NATIONAL DESIGN SPEC, BY AF&PA) AND TPI. ITW BCG CONNECTOR PLATES ARE MADE OF 20/18/16GA (W,H/SS/K) ASTM A653 GRADE 40/60 (W, K/H,SS) GALV. STEEL. APPLY PLATES TO EACH FACE OF TRUSS AND, UNLESS OTHERWISE LOCATED ON THIS DESIGN, POSITION PER DRAWINGS 160A-2. ANY INSPECTION OF PLATES FOLLOWED BY (1) SHALL BE PER ANNEX A3 OF TPI1-2002 SEC.3. A SEAL ON THIS DRAWING INDICATES ACCEPTANCE OF PROFESSIONAL ENGINEERING RESPONSIBILITY SOLELY FOR THE TRUSS COMPONENT DESIGN SHOWN. THE SUITABILITY AND USE OF THIS COMPONENT FOR ANY BUILDING IS THE RESPONSIBILITY OF THE BUILDING DESIGNER PER ANSI/TPI 1 SEC. 2.

ALPINE
ITW Building Components Group, Inc.
Haines City, FL 33844
FL Certificate of Authorization #0278

DOUGLAS FLEMING LICENSE No. 66648 STATE OF FLORIDA PROFESSIONAL ENGINEER
Dec 04 '07

TC LL	20.0 PSF	REF R8228- 32366
TC DL	10.0 PSF	DATE 12/04/07
BC DL	10.0 PSF	DRW HCUSR8228 07338096
BC LL	0.0 PSF	HC-ENG JB/DF *
TOT.LD.	40.0 PSF	SEQN- 64321
DUR.FAC.	1.25	FROM AH
SPACING	24.0"	JREF- 1TD08228Z01

THIS DWG PREPARED FROM COMPUTER INPUT (LOADS & DIMENSIONS) SUBMITTED BY TRUSS MFR.

Top chord 2x4 SP #2 Dense
Bot chord 2x4 SP #2 Dense
Webs 2x4 SP #3

Deflection meets L/240 live and L/180 total load. Creep increase factor for dead load is 1.50.

110 mph wind, 15.00 ft mean hgt, ASCE 7-02, PART._ENC. bldg, not located within 4.50 ft from roof edge, CAT II, EXP B, wind TC DL=5.0 psf, wind BC DL=5.0 psf. Iw=1.00 GCpi(+/-)=0.55

Wind reactions based on MWFRS pressures.

Right end vertical not exposed to wind pressure.

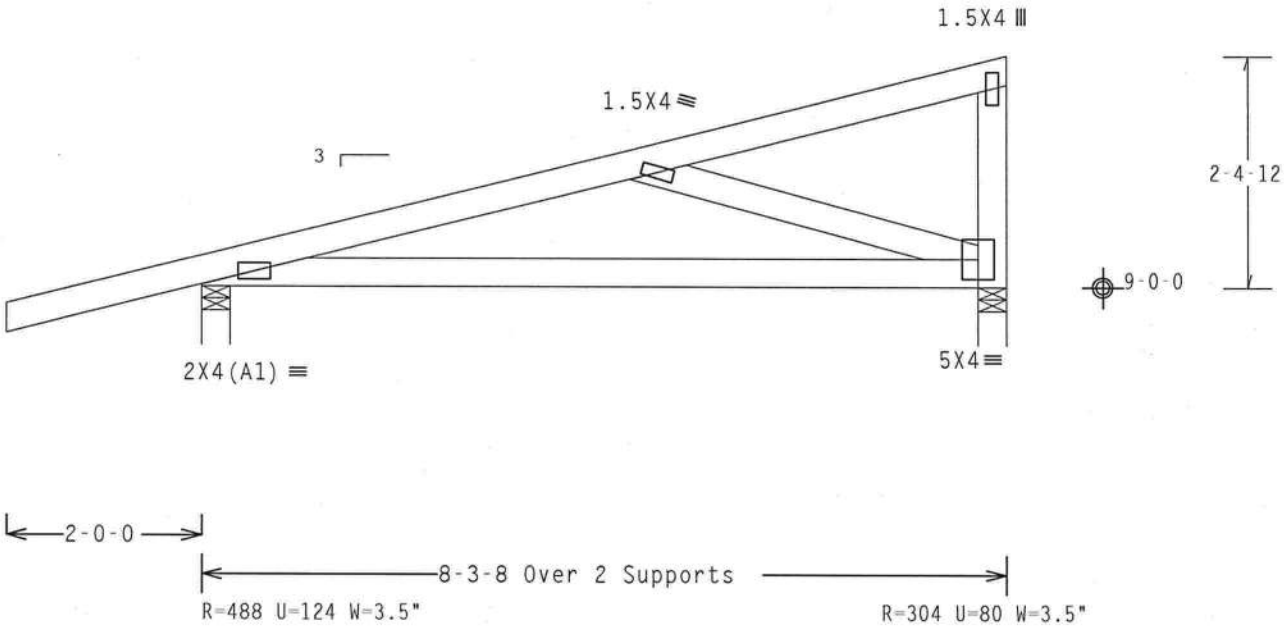

Design Crit: TPI-2002(STD)/FBC
Cq/RT=1.00(1.25)/0(0) 7.36.04

PLT TYP. Wave

QTY:1 FL/-/4/-/-/R/- Scale =.5"/Ft.

WARNING TRUSSES REQUIRE EXTREME CARE IN FABRICATION, HANDLING, SHIPPING, INSTALLING AND BRACING. REFER TO BCSI (BUILDING COMPONENT SAFETY INFORMATION), PUBLISHED BY TPI (TRUSS PLATE INSTITUTE, 218 NORTH LEE STREET, SUITE 312, ALEXANDRIA, VA, 22314) AND WTCA (WOOD TRUSS COUNCIL OF AMERICA, 6300 ENTERPRISE LANE, MADISON, WI 53719) FOR SAFETY PRACTICES PRIOR TO PERFORMING THESE FUNCTIONS. UNLESS OTHERWISE INDICATED TOP CHORD SHALL HAVE PROPERLY ATTACHED STRUCTURAL PANELS AND BOTTOM CHORD SHALL HAVE A PROPERLY ATTACHED RIGID CEILING.

IMPORTANTFURNISH A COPY OF THIS DESIGN TO THE INSTALLATION CONTRACTOR. ITW BCG, INC. SHALL NOT BE RESPONSIBLE FOR ANY DEVIATION FROM THIS DESIGN; ANY FAILURE TO BUILD THE TRUSS IN CONFORMANCE WITH TPI; OR FABRICATING, HANDLING, SHIPPING, INSTALLING & BRACING OF TRUSSES. DESIGN CONFORMS WITH APPLICABLE PROVISIONS OF NDS (NATIONAL DESIGN SPEC. BY AF&PA) AND TPI. ITW BCG CONNECTOR PLATES ARE MADE OF 20/18/16GA (W,H/SS/K) ASTM A653 GRADE 40/60 (W, K/H,SS) GALV. STEEL. APPLY PLATES TO EACH FACE OF TRUSS AND, UNLESS OTHERWISE LOCATED ON THIS DESIGN, POSITION PER DRAWINGS 16DA-Z. ANY INSPECTION OF PLATES FOLLOWED BY (1) SHALL BE PER ANNEX A3 OF TPI1-2002 SEC.3. A SEAL ON THIS DRAWING INDICATES ACCEPTANCE OF PROFESSIONAL ENGINEERING RESPONSIBILITY SOLELY FOR THE TRUSS COMPONENT DESIGN SHOWN. THE SUITABILITY AND USE OF THIS COMPONENT FOR ANY BUILDING IS THE RESPONSIBILITY OF THE BUILDING DESIGNER PER ANSI/TPI 1 SEC. 2.

ALPINE
ITW Building Components Group, Inc.
Haines City, FL 33844
FL Certificate of Authorization # 0-278

DOUGLAS FLEMING LICENSE No. 66648 STATE OF FLORIDA PROFESSIONAL ENGINEER
DEC 04 '07

TC LL	20.0 PSF	REF R8228- 32367
TC DL	10.0 PSF	DATE 12/04/07
BC DL	10.0 PSF	DRW HCUSR8228 07338097
BC LL	0.0 PSF	HC-ENG JB/DF *
TOT.LD.	40.0 PSF	SEQN- 64327
DUR.FAC.	1.25	FROM AH
SPACING	24.0"	JREF- 1TD08228Z01

Top chord 2x4 SP #2 Dense
Bot chord 2x4 SP #2 Dense
Webs 2x4 SP #3
:Stack Chord SC1 2x4 SP #2 Dense:

Truss spaced at 24.0" OC designed to support 2-0-0 top chord outlookers. Cladding load shall not exceed 10.00 PSF. Top chord must not be cut or notched.

Stacked top chord must NOT be notched or cut in area (NNL). Dropped top chord braced at 24" o.c. intervals. Attach stacked top chord (SC) to dropped top chord in notchable area using 3x4 tie-plates 24" o.c. Center plate on stacked/dropped chord interface, plate length perpendicular to chord length. Splice top chord in notchable area using 3x6.

The building designer is responsible for the design of the roof and ceiling diaphragms, gable end shear walls, and supporting shear walls. Shear walls must provide continuous lateral restraint to the gable end. All connections to be designed by the building designer.

110 mph wind, 15.00 ft mean hgt, ASCE 7-02, PART._ENC. bldg, Located anywhere in roof, CAT II, EXP B, wind TC DL=5.0 psf, wind BC DL=5.0 psf. Iw=1.00 GCpi(+/-)=0.55

Wind reactions based on MWFRS pressures.

Right end vertical not exposed to wind pressure.

Deflection meets L/240 live and L/180 total load. Creep increase factor for dead load is 1.50.

SEE DRW HCUSR001 02086015 FOR GABLE DETAILS.

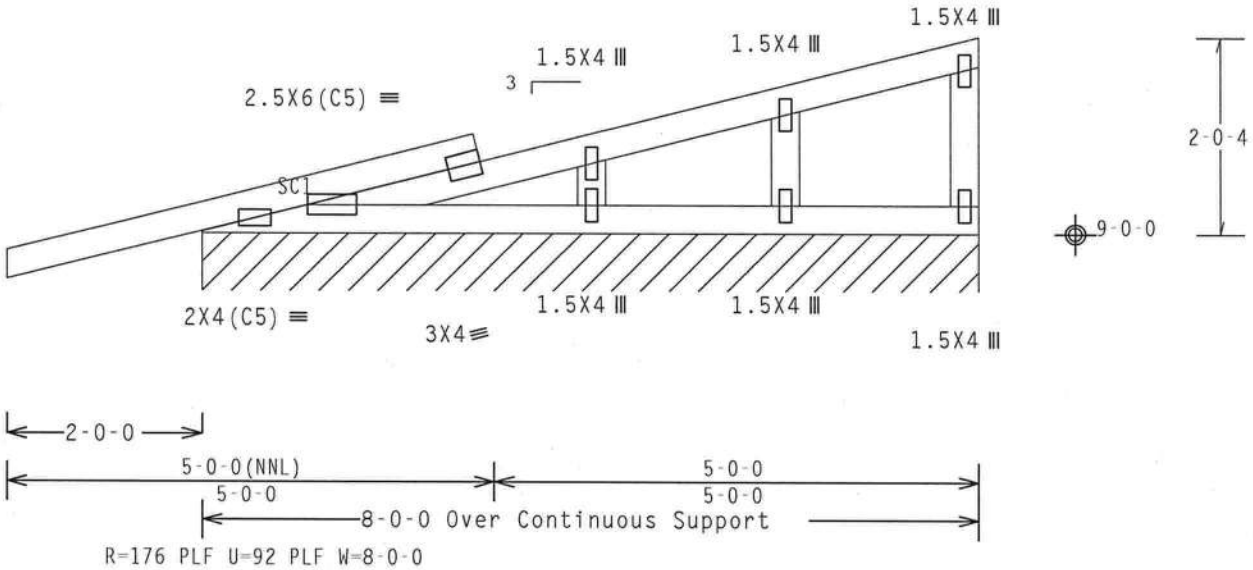

Design Crit: TPI-2002(STD)/FBC
Cq/RT=1.00(1.25)/0(0)

PLT TYP. Wave | 7.36.042 | QTY:1 | FL/-/4/-/-/R/- | Scale =.5"/Ft.

WARNING TRUSSES REQUIRE EXTREME CARE IN FABRICATION, HANDLING, SHIPPING, INSTALLING AND BRACING. REFER TO BCSI (BUILDING COMPONENT SAFETY INFORMATION), PUBLISHED BY TPI (TRUSS PLATE INSTITUTE, 218 NORTH LEE STREET, SUITE 312, ALEXANDRIA, VA, 22314) AND WTCA (WOOD TRUSS COUNCIL OF AMERICA, 6300 ENTERPRISE LANE, MADISON, WI 53719) FOR SAFETY PRACTICES PRIOR TO PERFORMING THESE FUNCTIONS. UNLESS OTHERWISE INDICATED TOP CHORD SHALL HAVE PROPERLY ATTACHED STRUCTURAL PANELS AND BOTTOM CHORD SHALL HAVE A PROPERLY ATTACHED RIGID CEILING.

IMPORTANTFURNISH A COPY OF THIS DESIGN TO THE INSTALLATION CONTRACTOR. ITW BCG, INC. SHALL NOT BE RESPONSIBLE FOR ANY DEVIATION FROM THIS DESIGN; ANY FAILURE TO BUILD THE TRUSS IN COMFORMANCE WITH TPI; OR FABRICATING, HANDLING, SHIPPING, INSTALLING & BRACING OF TRUSSES.
DESIGN CONFORMS WITH APPLICABLE PROVISIONS OF NDS (NATIONAL DESIGN SPEC, BY AF&PA) AND TPI. ITW BCG CONNECTOR PLATES ARE MADE OF 20/18/16GA (W,H/SS/K) ASTM A653 GRADE 40/60 (W, K/H,SS) GALV. STEEL. APPLY PLATES TO EACH FACE OF TRUSS AND. UNLESS OTHERWISE LOCATED ON THIS DESIGN, POSITION PER DRAWINGS 160A-Z. ANY INSPECTION OF PLATES FOLLOWED BY (I) SHALL BE PER ANNEX A3 OF TPI1-2002 SEC.3. A SEAL ON THIS DRAWING INDICATES ACCEPTANCE OF PROFESSIONAL ENGINEERING RESPONSIBILITY SOLELY FOR THE TRUSS COMPONENT DESIGN SHOWN. THE SUITABILITY AND USE OF THIS COMPONENT FOR ANY BUILDING IS THE RESPONSIBILITY OF THE BUILDING DESIGNER PER ANSI/TPI 1 SEC. 2.

ALPINE
ITW Building Components Group, Inc.
Haines City, FL 33844
FL Certificate of Authorization # 0-278

DOUGLAS FLEMING LICENSE No. 66648 STATE OF FLORIDA PROFESSIONAL ENGINEER
DEC 04 '07

TC LL	20.0 PSF	REF R8228- 32368
TC DL	10.0 PSF	DATE 12/04/07
BC DL	10.0 PSF	DRW HCUSR8228 07338111
BC LL	0.0 PSF	HC-ENG JB/DF
TOT.LD.	40.0 PSF	SEQN- 64406
DUR.FAC.	1.25	FROM AH
SPACING	24.0"	JREF- 1TD08228Z01

THIS DWG PREPARED FROM COMPUTER INPUT (LOADS & DIMENSIONS) SUBMITTED BY TRUSS MFR.

Top chord 2x4 SP #2 Dense
Bot chord 2x4 SP #2 Dense
Webs 2x4 SP #3

Deflection meets L/240 live and L/180 total load. Creep increase factor for dead load is 1.50.

110 mph wind, 15.00 ft mean hgt, ASCE 7-02, PART._ENC. bldg, not located within 4.50 ft from roof edge, CAT II, EXP B, wind TC DL=5.0 psf, wind BC DL=5.0 psf. Iw=1.00 GCpi(+/-)=0.55

Wind reactions based on MWFRS pressures.

Right end vertical not exposed to wind pressure.

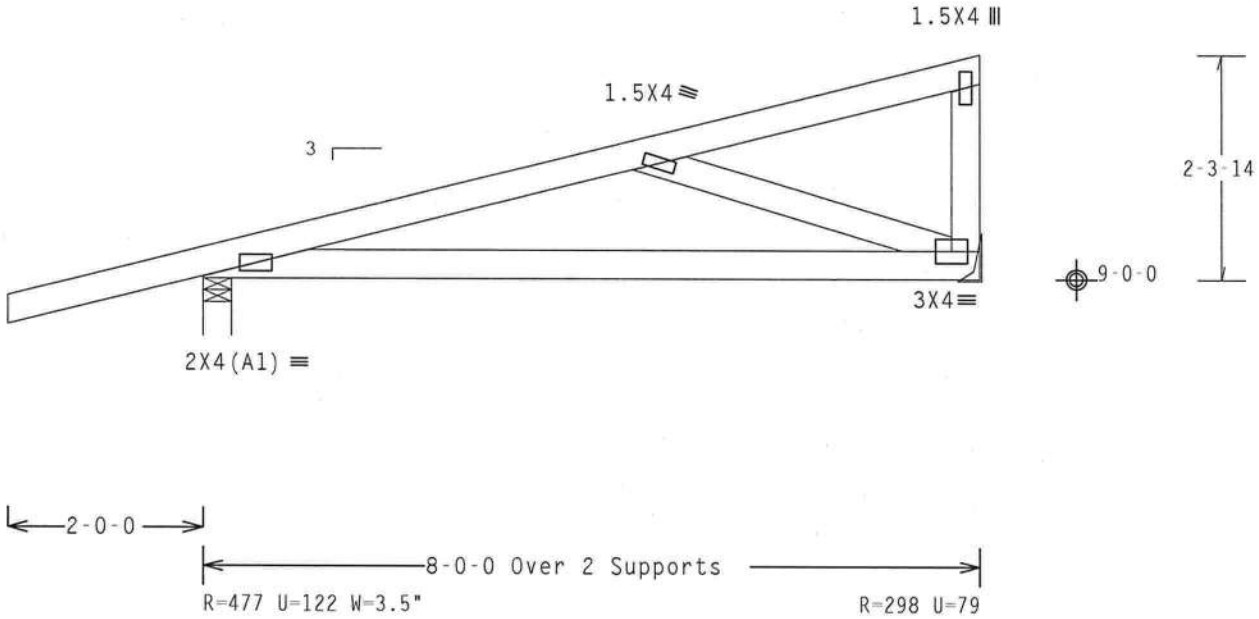

Design Crit: TPI-2002(STD)/FBC
Cq/RT=1.00(1.25)/0(0)

PLT TYP. Wave 7.36.04 QTY:1 FL/-/4/-/-/R/- Scale =.5"/Ft.

ALPINE
ITW Building Components Group, Inc.
Haines City, FL 33844
FL Certificate of Authorization # 0-278

WARNING TRUSSES REQUIRE EXTREME CARE IN FABRICATION, HANDLING, SHIPPING, INSTALLING AND BRACING. REFER TO BCSI (BUILDING COMPONENT SAFETY INFORMATION), PUBLISHED BY TPI (TRUSS PLATE INSTITUTE, 218 NORTH LEE STREET, SUITE 312, ALEXANDRIA, VA. 22314) AND WTCA (WOOD TRUSS COUNCIL OF AMERICA, 6300 ENTERPRISE LANE, MADISON, WI 53719) FOR SAFETY PRACTICES PRIOR TO PERFORMING THESE FUNCTIONS. UNLESS OTHERWISE INDICATED TOP CHORD SHALL HAVE PROPERLY ATTACHED STRUCTURAL PANELS AND BOTTOM CHORD SHALL HAVE A PROPERLY ATTACHED RIGID CEILING.

IMPORTANTFURNISH A COPY OF THIS DESIGN TO THE INSTALLATION CONTRACTOR. ITW BCG, INC. SHALL NOT BE RESPONSIBLE FOR ANY DEVIATION FROM THIS DESIGN; ANY FAILURE TO BUILD THE TRUSS IN COMFORMANCE WITH TPI; OR FABRICATING, HANDLING, SHIPPING, INSTALLING & BRACING OF TRUSSES.
DESIGN CONFORMS WITH APPLICABLE PROVISIONS OF NDS (NATIONAL DESIGN SPEC. BY AF&PA) AND TPI. ITW BCG CONNECTOR PLATES ARE MADE OF 20/18/16GA (W,H/SS/K) ASTM A653 GRADE 40/60 (W, K/H,SS) GALV. STEEL. APPLY PLATES TO EACH FACE OF TRUSS AND, UNLESS OTHERWISE LOCATED ON THIS DESIGN, POSITION PER DRAWINGS 160A-Z. ANY INSPECTION OF PLATES FOLLOWED BY (1) SHALL BE PER ANNEX A3 OF TPI1-2002 SEC.3. A SEAL ON THIS DRAWING INDICATES ACCEPTANCE OF PROFESSIONAL ENGINEERING RESPONSIBILITY SOLELY FOR THE TRUSS COMPONENT DESIGN SHOWN. THE SUITABILITY AND USE OF THIS COMPONENT FOR ANY BUILDING IS THE RESPONSIBILITY OF THE BUILDING DESIGNER PER ANSI/TPI 1 SEC. 2.

DOUGLAS FLEMING LICENSE No. 66648 STATE OF FLORIDA PROFESSIONAL ENGINEER
C 04 '07

TC LL	20.0 PSF	REF	R8228- 32369
TC DL	10.0 PSF	DATE	12/04/07
BC DL	10.0 PSF	DRW	HCUSR8228 07338098
BC LL	0.0 PSF	HC-ENG	JB/DF *
TOT.LD.	40.0 PSF	SEQN-	64510
DUR.FAC.	1.25	FROM	AH
SPACING	24.0"	JREF-	1TD08228Z01

THIS DWG PREPARED FROM COMPUTER INPUT (LOADS & DIMENSIONS) SUBMITTED BY TRUSS MFR.

Top chord 2x4 SP #2 Dense
Bot chord 2x4 SP #2 Dense
Webs 2x4 SP #3

Deflection meets L/240 live and L/180 total load. Creep increase factor for dead load is 1.50.

++ ANCHORAGE REQ'D TO PREVENT TRUSS FROM SLIPPING OFF BEARING.

110 mph wind, 15.00 ft mean hgt, ASCE 7-02, PART. ENC. bldg, not located within 4.50 ft from roof edge, CAT II, EXP B, wind TC DL=5.0 psf, wind BC DL=5.0 psf. Iw=1.00 GCpi(+/-)=0.55

Wind reactions based on MWFRS pressures.

Right end vertical not exposed to wind pressure.

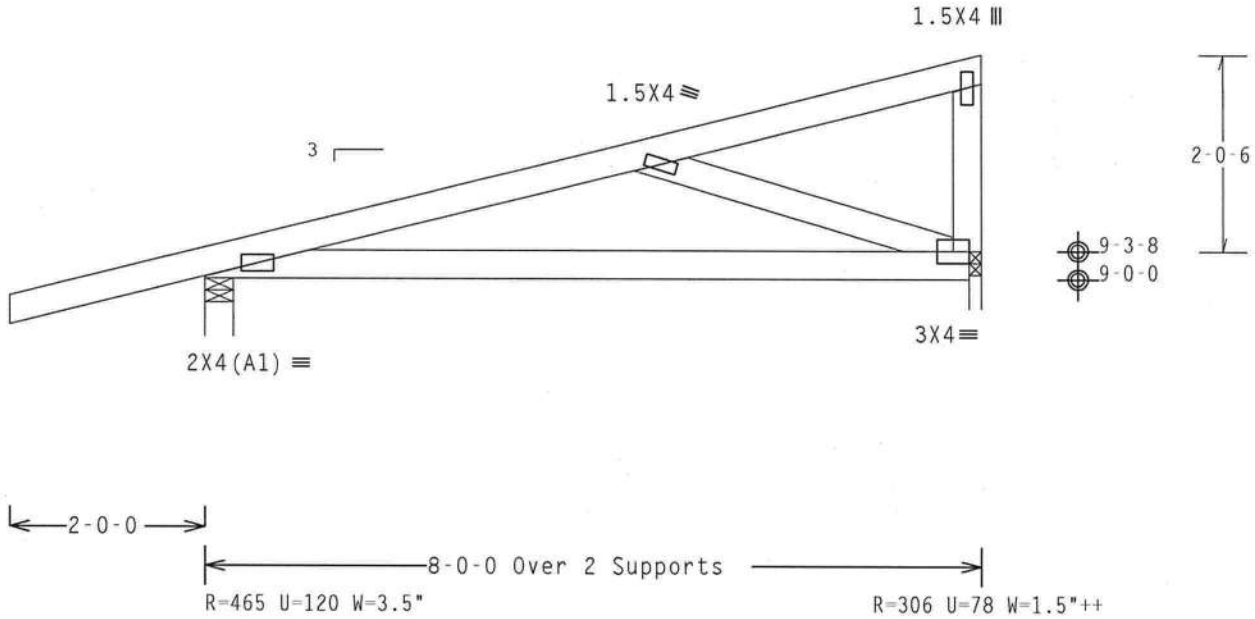

Design Crit: TPI-2002(STD)/FBC
Cq/RT=1.00(1.25)/0(0) 7.36.04

PLT TYP. Wave

QTY:1 FL/-/4/-/-/R/- Scale =.5"/Ft.

ALPINE
ITW Building Components Group, Inc.
Haines City, FL 33844
FL Certificate of Authorization #0-278

WARNING TRUSSES REQUIRE EXTREME CARE IN FABRICATION, HANDLING, SHIPPING, INSTALLING AND BRACING. REFER TO BCSI (BUILDING COMPONENT SAFETY INFORMATION), PUBLISHED BY TPI (TRUSS PLATE INSTITUTE, 218 NORTH LEE STREET, SUITE 312, ALEXANDRIA, VA. 22314) AND WTCA (WOOD TRUSS COUNCIL OF AMERICA, 6300 ENTERPRISE LANE, MADISON, WI 53719) FOR SAFETY PRACTICES PRIOR TO PERFORMING THESE FUNCTIONS. UNLESS OTHERWISE INDICATED TOP CHORD SHALL HAVE PROPERLY ATTACHED STRUCTURAL PANELS AND BOTTOM CHORD SHALL HAVE A PROPERLY ATTACHED RIGID CEILING.

IMPORTANTFURNISH A COPY OF THIS DESIGN TO THE INSTALLATION CONTRACTOR. ITW BCG, INC. SHALL NOT BE RESPONSIBLE FOR ANY DEVIATION FROM THIS DESIGN; ANY FAILURE TO BUILD THE TRUSS IN COMFORMANCE WITH TPI; OR FABRICATING, HANDLING, SHIPPING, INSTALLING & BRACING OF TRUSSES.
DESIGN CONFORMS WITH APPLICABLE PROVISIONS OF NDS (NATIONAL DESIGN SPEC, BY AF&PA) AND TPI. ITW BCG CONNECTOR PLATES ARE MADE OF 20/18/16GA (W,H/SS/K) ASTM A653 GRADE 40/60 (W, K/H,SS) GALV. STEEL. APPLY PLATES TO EACH FACE OF TRUSS AND, UNLESS OTHERWISE LOCATED ON THIS DESIGN, POSITION PER DRAWINGS 160A-Z. ANY INSPECTION OF PLATES FOLLOWED BY (1) SHALL BE PER ANNEX A3 OF TPI1-2002 SEC.3. A SEAL ON THIS DRAWING INDICATES ACCEPTANCE OF PROFESSIONAL ENGINEERING RESPONSIBILITY SOLELY FOR THE TRUSS COMPONENT DESIGN SHOWN. THE SUITABILITY AND USE OF THIS COMPONENT FOR ANY BUILDING IS THE RESPONSIBILITY OF THE BUILDING DESIGNER PER ANSI/TPI 1 SEC. 2.

DOUGLAS FLEMING
LICENSE
No. 66648
STATE OF FLORIDA
PROFESSIONAL ENGINEER

DEC 04 '07

TC LL	20.0 PSF	REF R8228- 32370
TC DL	10.0 PSF	DATE 12/04/07
BC DL	10.0 PSF	DRW HCUSR8228 07338099
BC LL	0.0 PSF	HC-ENG JB/DF
TOT.LD.	40.0 PSF	SEQN- 64516
DUR.FAC.	1.25	FROM AH
SPACING	24.0"	JREF- 1TD08228Z01

THIS DWG PREPARED FROM COMPUTER INPUT (LOADS & DIMENSIONS) SUBMITTED BY TRUSS MFR.

Top chord 2x4 SP #2 Dense
Bot chord 2x4 SP #2 Dense
Webs 2x4 SP #3

110 mph wind, 20.37 ft mean hgt, ASCE 7-02, CLOSED bldg, Located anywhere in roof, CAT II, EXP B, wind TC DL=5.0 psf, wind BC DL=1.2 psf. Iw=1.00 GCpi(+/-)=0.18

Deflection meets L/240 live and L/180 total load. Creep increase factor for dead load is 1.50.

Refer to DWG PIGBACKA0207 or PIGBACKB0207 for piggyback details.

SPECIAL LOADS
------(LUMBER DUR.FAC.=1.25 / PLATE DUR.FAC.=1.25)

TC - From	64 PLF	at	0.00 to	64 PLF	at	4.00
TC - From	64 PLF	at	4.00 to	64 PLF	at	8.00
BC - From	4 PLF	at	0.00 to	4 PLF	at	8.00

Wind reactions based on MWFRS pressures.

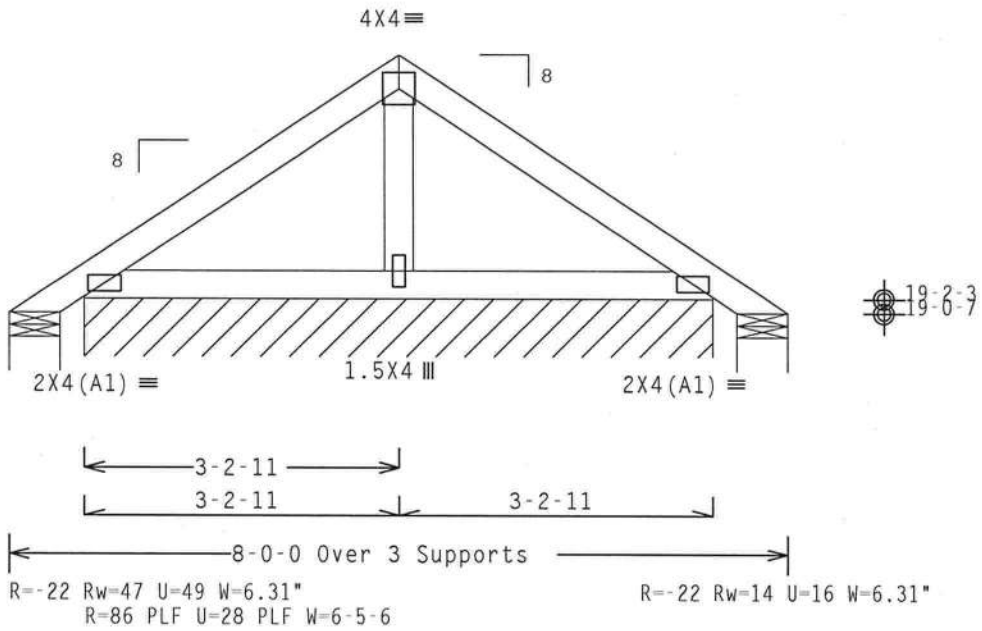

Design Crit: TPI-2002(STD)/FBC
Cq/RT=1.00(1.25)/0(0) 7.37.05 QTY:1 FL/-/4/-/-/R/- Scale =.5"/Ft.

PLT TYP. Wave

ALPINE
ITW Building Components Group, Inc.
Haines City, FL 33844
FL Certificate of Authorization # 0-278

WARNING TRUSSES REQUIRE EXTREME CARE IN FABRICATION, HANDLING, SHIPPING, INSTALLING AND BRACING. REFER TO BCSI (BUILDING COMPONENT SAFETY INFORMATION), PUBLISHED BY TPI (TRUSS PLATE INSTITUTE, 218 NORTH LEE STREET, SUITE 312, ALEXANDRIA, VA. 22314) AND WTCA (WOOD TRUSS COUNCIL OF AMERICA, 6300 ENTERPRISE LANE, MADISON, WI 53719) FOR SAFETY PRACTICES PRIOR TO PERFORMING THESE FUNCTIONS. UNLESS OTHERWISE INDICATED TOP CHORD SHALL HAVE PROPERLY ATTACHED STRUCTURAL PANELS AND BOTTOM CHORD SHALL HAVE A PROPERLY ATTACHED RIGID CEILING.

IMPORTANTFURNISH A COPY OF THIS DESIGN TO THE INSTALLATION CONTRACTOR. ITW BCG, INC. SHALL NOT BE RESPONSIBLE FOR ANY DEVIATION FROM THIS DESIGN; ANY FAILURE TO BUILD THE TRUSS IN COMFORMANCE WITH TPI; OR FABRICATING, HANDLING, SHIPPING, INSTALLING & BRACING OF TRUSSES.
DESIGN CONFORMS WITH APPLICABLE PROVISIONS OF NDS (NATIONAL DESIGN SPEC. BY AF&PA) AND TPI. ITW BCG CONNECTOR PLATES ARE MADE OF 20/18/16GA (W,H/SS/K) ASTM A653 GRADE 40/60 (W, K/H,SS) GALV. STEEL. APPLY PLATES TO EACH FACE OF TRUSS AND, UNLESS OTHERWISE LOCATED ON THIS DESIGN, POSITION PER DRAWINGS 160A-Z. ANY INSPECTION OF PLATES FOLLOWED BY (I) SHALL BE PER ANNEX A3 OF TPI1-2002 SEC.3. A SEAL ON THIS DRAWING INDICATES ACCEPTANCE OF PROFESSIONAL ENGINEERING RESPONSIBILITY SOLELY FOR THE TRUSS COMPONENT DESIGN SHOWN. THE SUITABILITY AND USE OF THIS COMPONENT FOR ANY BUILDING IS THE RESPONSIBILITY OF THE BUILDING DESIGNER PER ANSI/TPI 1 SEC. 2.

DOUGLAS FLEMING LICENSE No. 66648 STATE OF FLORIDA PROFESSIONAL ENGINEER
DEC 04 '07

TC LL	20.0 PSF	REF	R8228- 32371
TC DL	10.0 PSF	DATE	12/04/07
BC DL	10.0 PSF	DRW	HCUSR8228 07338113
BC LL	0.0 PSF	HC-ENG	JB/DF
TOT.LD.	40.0 PSF	SEQN-	7731 REV
DUR.FAC.	1.25	FROM	AH
SPACING	24.0"	JREF-	1TD08228Z01

Top chord 2x4 SP #2 Dense
Bot chord 2x4 SP #2 Dense
Webs 2x4 SP #3

110 mph wind, 20.20 ft mean hgt, ASCE 7-02, CLOSED bldg, Located anywhere in roof, CAT II, EXP B, wind TC DL=5.0 psf, wind BC DL=2.0 psf. Iw=1.00 GCpi(+/-)=0.18

Wind reactions based on MWFRS pressures.

See DWGS A11030EE0207 & GBLLETIN0207 for more requirements.

Deflection meets L/240 live and L/180 total load. Creep increase factor for dead load is 1.50.

Refer to DWG PIGBACKA0207 or PIGBACKB0207 for piggyback details.

SPECIAL LOADS
------(LUMBER DUR.FAC.=1.25 / PLATE DUR.FAC.=1.25)

TC - From	64 PLF	at	0.00 to	64 PLF	at	3.48
TC - From	64 PLF	at	3.48 to	64 PLF	at	6.96
BC - From	4 PLF	at	0.00 to	4 PLF	at	6.96

Truss spaced at 24.0" OC designed to support 2-0-0 top chord outlookers. Cladding load shall not exceed 10.00 PSF. Top chord must not be cut or notched.

In lieu of rigid ceiling use purlins to brace BC @ 24" OC.

The building designer is responsible for the design of the roof and ceiling diaphragms, gable end shear walls, and supporting shear walls. Shear walls must provide continuous lateral restraint to the gable end. All connections to be designed by the building designer.

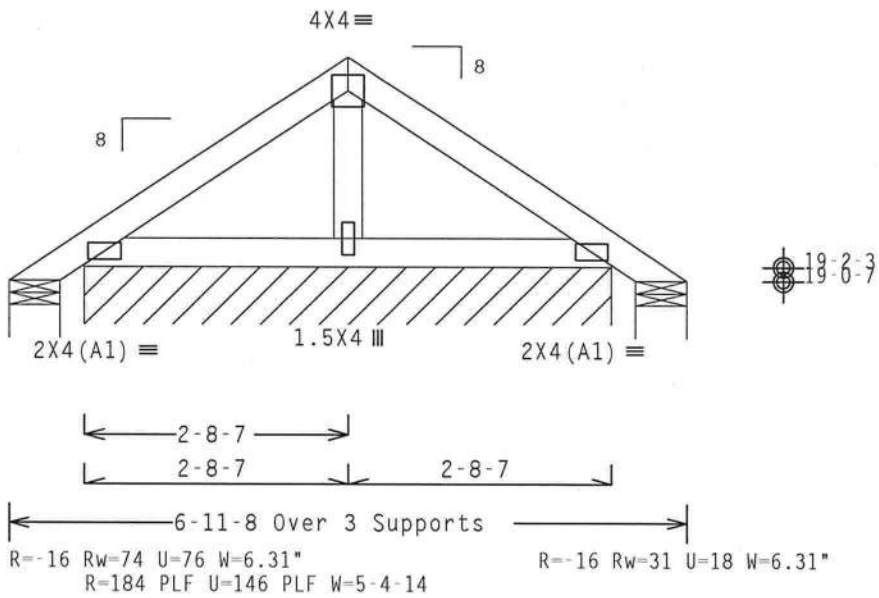

Design Crit: TPI-2002(STD)/FBC
Cq/RT=1.00(1.25)/0(0)

PLT TYP. Wave | 7.36.043 | QTY:1 | FL/-/4/-/-/R/- | Scale =.5"/Ft.

ALPINE
ITW Building Components Group, Inc.
Haines City, FL 33844
FL Certificate of Authorization #0278

WARNING TRUSSES REQUIRE EXTREME CARE IN FABRICATION, HANDLING, SHIPPING, INSTALLING AND BRACING. REFER TO BCSI (BUILDING COMPONENT SAFETY INFORMATION), PUBLISHED BY TPI (TRUSS PLATE INSTITUTE, 218 NORTH LEE STREET, SUITE 312, ALEXANDRIA, VA. 22314) AND WTCA (WOOD TRUSS COUNCIL OF AMERICA, 6300 ENTERPRISE LANE, MADISON, WI 53719) FOR SAFETY PRACTICES PRIOR TO PERFORMING THESE FUNCTIONS. UNLESS OTHERWISE INDICATED TOP CHORD SHALL HAVE PROPERLY ATTACHED STRUCTURAL PANELS AND BOTTOM CHORD SHALL HAVE A PROPERLY ATTACHED RIGID CEILING.

IMPORTANTFURNISH A COPY OF THIS DESIGN TO THE INSTALLATION CONTRACTOR. ITW BCG, INC. SHALL NOT BE RESPONSIBLE FOR ANY DEVIATION FROM THIS DESIGN; ANY FAILURE TO BUILD THE TRUSS IN CONFORMANCE WITH TPI; OR FABRICATING, HANDLING, SHIPPING, INSTALLING & BRACING OF TRUSSES.
DESIGN CONFORMS WITH APPLICABLE PROVISIONS OF NDS (NATIONAL DESIGN SPEC. BY AF&PA) AND TPI. ITW BCG CONNECTOR PLATES ARE MADE OF 20/18/16GA (W,H/SS/K) ASTM A653 GRADE 40/60 (W, K/H,SS) GALV. STEEL. APPLY PLATES TO EACH FACE OF TRUSS AND, UNLESS OTHERWISE LOCATED ON THIS DESIGN, POSITION PER DRAWINGS 160A-Z. ANY INSPECTION OF PLATES FOLLOWED BY (1) SHALL BE PER ANNEX A3 OF TPI1-2002 SEC.3. A SEAL ON THIS DRAWING INDICATES ACCEPTANCE OF PROFESSIONAL ENGINEERING RESPONSIBILITY SOLELY FOR THE TRUSS COMPONENT DESIGN SHOWN. THE SUITABILITY AND USE OF THIS COMPONENT FOR ANY BUILDING IS THE RESPONSIBILITY OF THE BUILDING DESIGNER PER ANSI/TPI 1 SEC. 2.

DOUGLAS FLEMING LICENSE No. 66648 STATE OF FLORIDA PROFESSIONAL ENGINEER

04 '07

TC LL	20.0 PSF	REF	R8228- 32372
TC DL	10.0 PSF	DATE	12/04/07
BC DL	10.0 PSF	DRW	HCUSR8228 07338114
BC LL	0.0 PSF	HC-ENG	JB/DF
TOT.LD.	40.0 PSF	SEQN-	64455
DUR.FAC.	1.25	FROM	AH
SPACING	24.0"	JREF-	1TD08228Z01

ASCE 7-02: 110 MPH WIND SPEED, 15' MEAN HEIGHT, ENCLOSED, I = 1.00, EXPOSURE C

MAX GABLE VERTICAL LENGTH

2X4 GABLE VERTICAL SPACING	SPECIES	BRACE GRADE	NO BRACES	(1) 1X4 "L" BRACE * GROUP A	(1) 1X4 "L" BRACE * GROUP B	(1) 2X4 "L" BRACE * GROUP A	(1) 2X4 "L" BRACE * GROUP B	(2) 2X4 "L" BRACE ** GROUP A	(2) 2X4 "L" BRACE ** GROUP B	(1) 2X6 "L" BRACE * GROUP A	(1) 2X6 "L" BRACE * GROUP B	(2) 2X6 "L" BRACE ** GROUP A	(2) 2X6 "L" BRACE ** GROUP B
24" O.C.	SPF HF	#1 / #2	3' 10"	6' 8"	6' 10"	7' 11"	8' 1"	9' 5"	9' 8"	12' 5"	12' 9"	14' 0"	14' 0"
		#3	3' 9"	6' 0"	6' 0"	7' 11"	7' 11"	9' 5"	9' 5"	12' 4"	12' 4"	14' 0"	14' 0"
		STUD	3' 9"	6' 0"	6' 0"	7' 11"	7' 11"	9' 5"	9' 5"	12' 3"	12' 3"	14' 0"	14' 0"
		STANDARD	3' 9"	5' 2"	5' 2"	6' 9"	6' 9"	9' 1"	9' 1"	10' 7"	10' 7"	14' 0"	14' 0"
	SP DFL	#1	4' 3"	6' 8"	7' 2"	7' 11"	8' 6"	9' 5"	10' 2"	12' 5"	13' 5"	14' 0"	14' 0"
		#2	4' 2"	6' 8"	7' 2"	7' 11"	8' 6"	9' 5"	10' 2"	12' 5"	13' 5"	14' 0"	14' 0"
		#3	4' 0"	6' 2"	6' 2"	7' 11"	8' 1"	9' 5"	9' 11"	12' 5"	12' 8"	14' 0"	14' 0"
		STUD	4' 0"	6' 1"	6' 1"	7' 11"	8' 0"	9' 5"	9' 11"	12' 5"	12' 6"	14' 0"	14' 0"
		STANDARD	3' 10"	5' 3"	5' 3"	6' 11"	6' 11"	9' 4"	9' 4"	10' 10"	10' 10"	14' 0"	14' 0"
16" O.C.	SPF HF	#1 / #2	4' 5"	7' 8"	7' 10"	9' 1"	9' 4"	10' 10"	11' 1"	14' 0"	14' 0"	14' 0"	14' 0"
		#3	4' 4"	7' 4"	7' 4"	9' 1"	9' 1"	10' 10"	10' 10"	14' 0"	14' 0"	14' 0"	14' 0"
		STUD	4' 4"	7' 4"	7' 4"	9' 1"	9' 1"	10' 10"	10' 10"	14' 0"	14' 0"	14' 0"	14' 0"
		STANDARD	4' 4"	6' 4"	6' 4"	8' 4"	8' 4"	10' 10"	10' 10"	12' 11"	12' 11"	14' 0"	14' 0"
	SP DFL	#1	4' 10"	7' 8"	8' 3"	9' 1"	9' 9"	10' 10"	11' 8"	14' 0"	14' 0"	14' 0"	14' 0"
		#2	4' 9"	7' 8"	8' 3"	9' 1"	9' 9"	10' 10"	11' 8"	14' 0"	14' 0"	14' 0"	14' 0"
		#3	4' 6"	7' 7"	7' 7"	9' 1"	9' 6"	10' 10"	11' 4"	14' 0"	14' 0"	14' 0"	14' 0"
		STUD	4' 6"	7' 6"	7' 6"	9' 1"	9' 6"	10' 10"	11' 4"	14' 0"	14' 0"	14' 0"	14' 0"
		STANDARD	4' 5"	6' 5"	6' 5"	8' 6"	8' 6"	10' 10"	11' 1"	13' 3"	13' 3"	14' 0"	14' 0"
12" O.C.	SPF HF	#1 / #2	4' 11"	8' 5"	8' 8"	10' 0"	10' 3"	11' 11"	12' 3"	14' 0"	14' 0"	14' 0"	14' 0"
		#3	4' 9"	8' 5"	8' 5"	10' 0"	10' 0"	11' 11"	11' 11"	14' 0"	14' 0"	14' 0"	14' 0"
		STUD	4' 9"	8' 5"	8' 5"	10' 0"	10' 0"	11' 11"	11' 11"	14' 0"	14' 0"	14' 0"	14' 0"
		STANDARD	4' 9"	7' 3"	7' 3"	9' 7"	9' 7"	11' 11"	11' 11"	14' 0"	14' 0"	14' 0"	14' 0"
	SP DFL	#1	5' 4"	8' 5"	9' 1"	10' 0"	10' 9"	11' 11"	12' 10"	14' 0"	14' 0"	14' 0"	14' 0"
		#2	5' 3"	8' 5"	9' 1"	10' 0"	10' 9"	11' 11"	12' 10"	14' 0"	14' 0"	14' 0"	14' 0"
		#3	5' 0"	8' 5"	8' 5"	10' 0"	10' 6"	11' 11"	12' 6"	14' 0"	14' 0"	14' 0"	14' 0"
		STUD	5' 0"	8' 5"	8' 7"	10' 0"	10' 6"	11' 11"	12' 6"	14' 0"	14' 0"	14' 0"	14' 0"
		STANDARD	4' 11"	7' 5"	7' 5"	9' 10"	9' 10"	11' 11"	12' 3"	14' 0"	14' 0"	14' 0"	14' 0"

BRACING GROUP SPECIES AND GRADES:

GROUP A:

SPRUCE-PINE-FIR

#1 / #2	STANDARD
#3	STUD

HEM-FIR

#2	STUD
#3	STANDARD

DOUGLAS FIR-LARCH

#3
STUD
STANDARD

SOUTHERN PINE

#3
STUD
STANDARD

GROUP B:

HEM-FIR

#1 & BTR
#1

SOUTHERN PINE

#1
#2

DOUGLAS FIR-LARCH

#1
#2

GABLE TRUSS DETAIL NOTES:

LIVE LOAD DEFLECTION CRITERIA IS L/240.

PROVIDE UPLIFT CONNECTIONS FOR 80 PLF OVER CONTINUOUS BEARING (5 PSF TC DEAD LOAD).

GABLE END SUPPORTS LOAD FROM 4' 0" OUTLOOKERS WITH 2' 0" OVERHANG, OR 12" PLYWOOD OVERHANG.

ATTACH EACH "L" BRACE WITH 10d NAILS.
* FOR (1) "L" BRACE: SPACE NAILS AT 2" O.C. IN 18" END ZONES AND 4" O.C. BETWEEN ZONES.
** FOR (2) "L" BRACES: SPACE NAILS AT 3" O.C. IN 18" END ZONES AND 6" O.C. BETWEEN ZONES.

"L" BRACING MUST BE A MINIMUM OF 80% OF WEB MEMBER LENGTH.

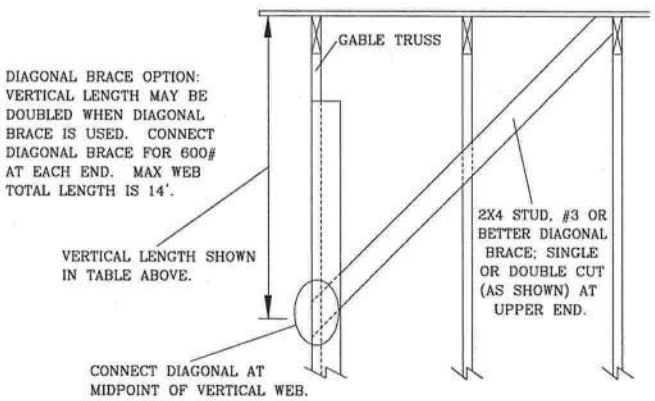

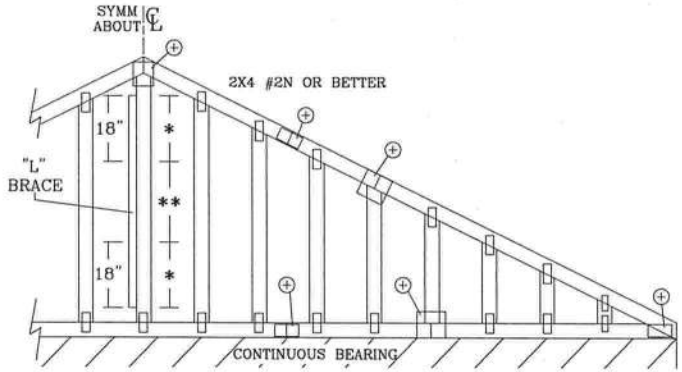

REFER TO CHART ABOVE FOR MAX GABLE VERTICAL LENGTH.

GABLE VERTICAL PLATE SIZES

VERTICAL LENGTH	NO SPLICE
LESS THAN 4' 0"	1X4 OR 2X3
GREATER THAN 4' 0", BUT LESS THAN 11' 6"	2X4
GREATER THAN 11' 6"	2.5X4

+ REFER TO COMMON TRUSS DESIGN FOR PEAK, SPLICE, AND HEEL PLATES.

ALPINE

ITW BUILDING COMPONENTS GROUP, INC.
POMPANO BEACH, FLORIDA

WARNING TRUSSES REQUIRE EXTREME CARE IN FABRICATING, HANDLING, SHIPPING, INSTALLING AND BRACING. REFER TO BCSI (BUILDING COMPONENT SAFETY INFORMATION), PUBLISHED BY TPI (TRUSS PLATE INSTITUTE, 218 NORTH LEE STR., SUITE 312, ALEXANDRIA, VA. 22314) AND WTCA (WOOD TRUSS COUNCIL OF AMERICA, 6300 ENTERPRISE LN, MADISON, WI 53719) FOR SAFETY PRACTICES PRIOR TO PERFORMING THESE FUNCTIONS. UNLESS OTHERWISE INDICATED, TOP CHORD SHALL HAVE PROPERLY ATTACHED STRUCTURAL PANELS AND BOTTOM CHORD SHALL HAVE A PROPERLY ATTACHED RIGID CEILING.

IMPORTANT FURNISH COPY OF THIS DESIGN TO INSTALLATION CONTRACTOR. ITW BCG, INC., SHALL NOT BE RESPONSIBLE FOR ANY DEVIATION FROM THIS DESIGN; ANY FAILURE TO BUILD THE TRUSS IN CONFORMANCE WITH TPI; OR FABRICATING, HANDLING, SHIPPING, INSTALLING & BRACING OF TRUSSES. DESIGN CONFORMS WITH APPLICABLE PROVISIONS OF NDS (NATIONAL DESIGN SPEC, BY AF&PA) AND TPI. ITW, BCG CONNECTOR PLATES ARE MADE OF 20/18/16GA (W,H/SS/K) ASTM A653 GRADE 40/60 (W,K/H,SS) GALV. STEEL. APPLY PLATES TO EACH FACE OF TRUSS AND, UNLESS OTHERWISE LOCATED ON THIS DESIGN, POSITION PER DRAWINGS 160A-Z. ANY INSPECTION OF PLATES FOLLOWED BY (I) SHALL BE PER ANNEX A3 OF TPI 1-2002 SEC. 3. A SEAL ON THIS DRAWING INDICATES ACCEPTANCE OF PROFESSIONAL ENGINEERING RESPONSIBILITY SOLELY FOR THE TRUSS COMPONENT DESIGN SHOWN. THE SUITABILITY AND USE OF THIS COMPONENT FOR ANY BUILDING IS THE RESPONSIBILITY OF THE BUILDING DESIGNER, PER ANSI/TPI 1 SEC. 2.

DOUGLAS FLEMING LICENSE No. 66648 STATE OF FLORIDA PROFESSIONAL ENGINEER
04 '07

MAX. TOT. LD. 60 PSF

MAX. SPACING 24.0"

REF	ASCE7-02-GAB11015
DATE	2/23/07
DRWG	A11015EE0207
-ENG	

GABLE DETAIL
FOR LET-IN VERTICALS

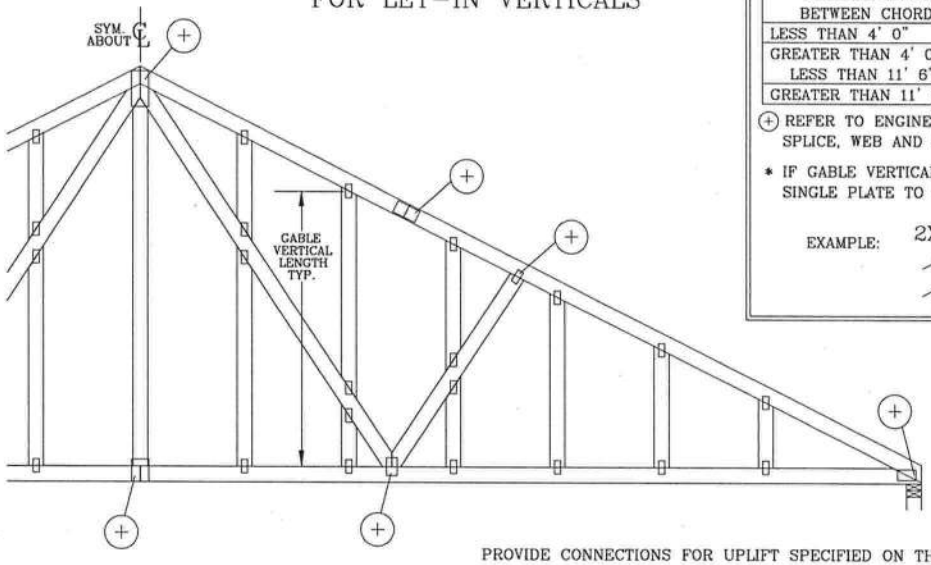

GABLE VERTICAL PLATE SIZES		
VERTICAL LENGTH BETWEEN CHORDS	PLATE SIZE	IF PLATES OVERLAP*
LESS THAN 4' 0"	1X4 OR 2X3	2X8
GREATER THAN 4' 0", BUT LESS THAN 11' 6"	2X4	2X8
GREATER THAN 11' 6"	2.5X4	2.5X8

(+) REFER TO ENGINEERED TRUSS DESIGN FOR PEAK, SPLICE, WEB AND HEEL PLATES.

* IF GABLE VERTICAL PLATES OVERLAP, USE A SINGLE PLATE TO SPAN THE WEB.

EXAMPLE:

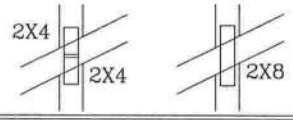

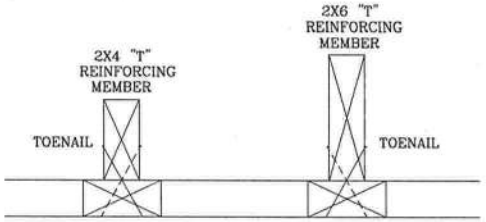

TO CONVERT FROM "L" TO "T" REINFORCING MEMBERS, MULTIPLY "T" FACTOR BY LENGTH (BASED ON GABLE VERTICAL SPECIES, GRADE AND SPACING) FOR (1) 2X4 "L" BRACE, GROUP A, OBTAINED FROM THE APPROPRIATE ALPINE GABLE DETAIL FOR ASCE OR SBCCI WIND LOAD.

MAXIMUM ALLOWABLE "T" REINFORCED GABLE VERTICAL LENGTH IS 14' FROM TOP TO BOTTOM CHORD.

WEB LENGTH INCREASE W/ "T" BRACE

WIND SPEED AND MRH	"T" REINF. MBR. SIZE	SBCCI	ASCE
110 MPH	2x4	10 %	10 %
15 FT	2x6	40 %	50 %
110 MPH	2x4	10 %	10 %
30 FT	2x6	50 %	50 %
100 MPH	2x4	10 %	10 %
15 FT	2x6	30 %	50 %
100 MPH	2x4	10 %	10 %
30 FT	2x6	40 %	40 %
90 MPH	2x4	20 %	10 %
15 FT	2x6	20 %	40 %
90 MPH	2x4	10 %	10 %
30 FT	2x6	30 %	50 %
80 MPH	2x4	10 %	20 %
15 FT	2x6	10 %	30 %
80 MPH	2x4	20 %	10 %
30 FT	2x6	20 %	40 %
70 MPH	2x4	0 %	20 %
15 FT	2x6	0 %	20 %
70 MPH	2x4	10 %	20 %
30 FT	2x6	10 %	30 %

EXAMPLE:
ASCE WIND SPEED = 100 MPH
MEAN ROOF HEIGHT = 30 FT
GABLE VERTICAL = 24" O.C. SP #3
"T" REINFORCING MEMBER SIZE = 2X4
"T" BRACE INCREASE (FROM ABOVE) = 10% = 1.10
(1) 2X4 "L" BRACE LENGTH = 6' 7"
MAXIMUM "T" REINFORCED GABLE VERTICAL LENGTH
1.10 x 6' 7" = 7' 3"

PROVIDE CONNECTIONS FOR UPLIFT SPECIFIED ON THE ENGINEERED TRUSS DESIGN.

ATTACH EACH "T" REINFORCING MEMBER WITH
HAND DRIVEN NAILS:
10d COMMON (0.148"X 3.",MIN) TOENAILS AT 4" O.C. PLUS
(4) 16d COMMON (0.162" X 3.5",MIN) TOENAILS IN TOP AND BOTTOM CHORD.

GUN DRIVEN NAILS:
8d COMMON (0.131"X 2.5",MIN) TOENAILS AT 4" O.C. PLUS
(4) TOENAILS IN TOP AND BOTTOM CHORD.

THIS DETAIL TO BE USED WITH THE APPROPRIATE ALPINE GABLE DETAIL FOR ASCE OR SBCCI WIND LOAD.
ASCE 7-93 GABLE DETAIL DRAWINGS
A11015EN0207, A10015EN0207, A09015EN0207, A08015EN0207, A07015EN0207, A11030EN0207, A10030EN0207, A09030EN0207, A08030EN0207, A07030EN0207
ASCE 7-98 GABLE DETAIL DRAWINGS
A13015EC0207, A12015EC0207, A11015EC0207, A10015EC0207, A08515EC0207, A13030EC0207, A12030EC0207, A11030EC0207, A10030EC0207, A08530EC0207
ASCE 7-02 GABLE DETAIL DRAWINGS
A13015EE0207, A12015EE0207, A11015EE0207, A10015EE0207, A08515EE0207, A13030EE0207, A12030EE0207, A11030EE0207, A10030EE0207, A08530EE0207
ASCE 7-05 GABLE DETAIL DRAWINGS
A13015E50207, A12015E50207, A11015E50207, A10015E50207, A08515E50207, A13030E50207, A12030E50207, A11030E50207, A10030E50207, A08530E50207

SEE APPROPRIATE ALPINE GABLE DETAIL (ASCE OR SBCCI WIND LOAD) FOR MAXIMUM UNREINFORCED GABLE VERTICAL LENGTH.

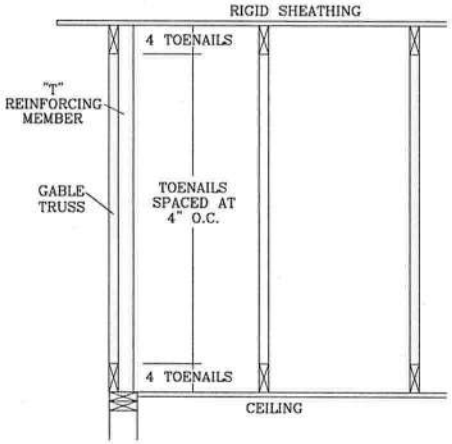

THIS DRAWING REPLACES DRAWINGS GAB98117 876,719 & HC26294035

ALPINE
ITW BUILDING COMPONENTS GROUP, INC.
POMPANO BEACH, FLORIDA

WARNING TRUSSES REQUIRE EXTREME CARE IN FABRICATING, HANDLING, SHIPPING, INSTALLING AND BRACING. REFER TO BCSI (BUILDING COMPONENT SAFETY INFORMATION), PUBLISHED BY TPI (TRUSS PLATE INSTITUTE, 218 NORTH LEE STR., SUITE 312, ALEXANDRIA, VA. 22314) AND WTCA (WOOD TRUSS COUNCIL OF AMERICA, 6300 ENTERPRISE LN, MADISON, WI 53719) FOR SAFETY PRACTICES PRIOR TO PERFORMING THESE FUNCTIONS. UNLESS OTHERWISE INDICATED, TOP CHORD SHALL HAVE PROPERLY ATTACHED STRUCTURAL PANELS AND BOTTOM CHORD SHALL HAVE A PROPERLY ATTACHED RIGID CEILING.

IMPORTANT FURNISH COPY OF THIS DESIGN TO INSTALLATION CONTRACTOR. ITW BCG, INC., SHALL NOT BE RESPONSIBLE FOR ANY DEVIATION FROM THIS DESIGN; ANY FAILURE TO BUILD THE TRUSS IN CONFORMANCE WITH TPI; OR FABRICATING, HANDLING, SHIPPING, INSTALLING & BRACING OF TRUSSES. DESIGN CONFORMS WITH APPLICABLE PROVISIONS OF NDS (NATIONAL DESIGN SPEC, BY AF&PA) AND TPI. ITW, BCG CONNECTOR PLATES ARE MADE OF 20/18/16GA (W,H/SS/K) ASTM A653 GRADE 40/60 (W,K/H,SS) GALV. STEEL. APPLY PLATES TO EACH FACE OF TRUSS AND, UNLESS OTHERWISE LOCATED ON THIS DESIGN, POSITION PER DRAWINGS 160A-Z. ANY INSPECTION OF PLATES FOLLOWED BY (I) SHALL BE PER ANNEX A3 OF TPI 1-2002 SEC. 3. A SEAL ON THIS DRAWING INDICATES ACCEPTANCE OF PROFESSIONAL ENGINEERING RESPONSIBILITY SOLELY FOR THE TRUSS COMPONENT DESIGN SHOWN. THE SUITABILITY AND USE OF THIS COMPONENT FOR ANY BUILDING IS THE RESPONSIBILITY OF THE BUILDING DESIGNER, PER ANSI/TPI 1 SEC. 2.

DOUGLAS FLEMING LICENSE No. 66648 STATE OF FLORIDA PROFESSIONAL ENGINEER
Dec 04 '07

MAX TOT. LD. 60 PSF
DUR. FAC. ANY
MAX SPACING 24.0"

REF	LET-IN VERT
DATE	2/23/07
DRWG	GBLLETIN0207
-ENG	DLJ/KAR

CLB WEB BRACE SUBSTITUTION

THIS DETAIL IS TO BE USED WHEN CONTINUOUS LATERAL BRACING (CLB) IS SPECIFIED ON AN ALPINE TRUSS DESIGN BUT AN ALTERNATIVE WEB BRACING METHOD IS DESIRED.

NOTES:

THIS DETAIL IS ONLY APPLICABLE FOR CHANGING THE SPECIFIED CLB SHOWN ON SINGLE PLY SEALED DESIGNS TO T-BRACING OR SCAB BRACING.

ALTERNATIVE BRACING SPECIFIED IN CHART BELOW MAY BE CONSERVATIVE. FOR MINIMUM ALTERNATIVE BRACING, RE-RUN DESIGN WITH APPROPRIATE BRACING.

WEB MEMBER SIZE	SPECIFIED CLB BRACING	ALTERNATIVE BRACING T OR L-BRACE	ALTERNATIVE BRACING SCAB BRACE
2X3 OR 2X4	1 ROW	2X4	1-2X4
2X3 OR 2X4	2 ROWS	2X6	2-2X4
2X6	1 ROW	2X4	1-2X6
2X6	2 ROWS	2X6	2-2X4(*)
2X8	1 ROW	2X6	1-2X8
2X8	2 ROWS	2X6	2-2X6(*)

T-BRACE, L-BRACE AND SCAB BRACE TO BE SAME SPECIES AND GRADE OR BETTER THAN WEB MEMBER UNLESS SPECIFIED OTHERWISE ON ENGINEER'S SEALED DESIGN.

(*) CENTER SCAB ON WIDE FACE OF WEB. APPLY (1) SCAB TO EACH FACE OF WEB.

T-BRACING OR L-BRACING:

APPLY TO EITHER SIDE OF WEB NARROW FACE. ATTACH WITH 10d BOX OR GUN (0.128"x 3.",MIN) NAILS. AT 6" O.C. BRACE IS A MINIMUM 80% OF WEB MEMBER LENGTH

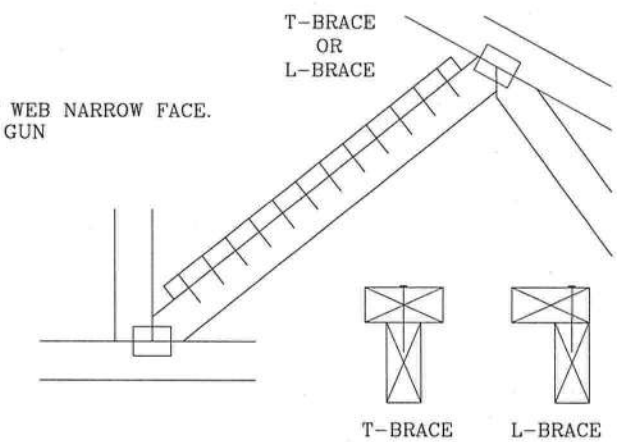

SCAB BRACING:

APPLY SCAB(S) TO WIDE FACE OF WEB. NO MORE THAN (1) SCAB PER FACE. ATTACH WITH 10d BOX OR GUN (0.128"x 3.",MIN) NAILS. AT 6" O.C. BRACE IS A MINIMUM 80% OF WEB MEMBER LENGTH

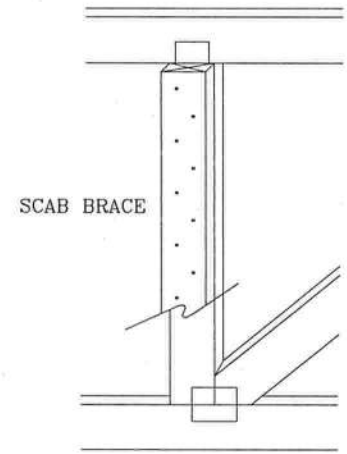

THIS DRAWING REPLACES DRAWING 579,640

ALPINE

ITW BUILDING COMPONENTS GROUP, INC.
POMPANO BEACH, FLORIDA

WARNING TRUSSES REQUIRE EXTREME CARE IN FABRICATING, HANDLING, SHIPPING, INSTALLING AND BRACING. REFER TO BCSI (BUILDING COMPONENT SAFETY INFORMATION), PUBLISHED BY TPI (TRUSS PLATE INSTITUTE, 218 NORTH LEE STR., SUITE 312, ALEXANDRIA, VA. 22314) AND WTCA (WOOD TRUSS COUNCIL OF AMERICA, 6300 ENTERPRISE LN, MADISON, WI 53719) FOR SAFETY PRACTICES PRIOR TO PERFORMING THESE FUNCTIONS. UNLESS OTHERWISE INDICATED, TOP CHORD SHALL HAVE PROPERLY ATTACHED STRUCTURAL PANELS AND BOTTOM CHORD SHALL HAVE A PROPERLY ATTACHED RIGID CEILING.

IMPORTANT FURNISH COPY OF THIS DESIGN TO INSTALLATION CONTRACTOR. ITW BCG, INC., SHALL NOT BE RESPONSIBLE FOR ANY DEVIATION FROM THIS DESIGN; ANY FAILURE TO BUILD THE TRUSS IN CONFORMANCE WITH TPI; OR FABRICATING, HANDLING, SHIPPING, INSTALLING & BRACING OF TRUSSES. DESIGN CONFORMS WITH APPLICABLE PROVISIONS OF NDS (NATIONAL DESIGN SPEC. BY AF&PA) AND TPI. ITW, BCG CONNECTOR PLATES ARE MADE OF 20/18/16GA (W,H/SS/K) ASTM A653 GRADE 40/60 (W,K/H,SS) GALV. STEEL. APPLY PLATES TO EACH FACE OF TRUSS AND, UNLESS OTHERWISE LOCATED ON THIS DESIGN, POSITION PER DRAWINGS 160A-Z. ANY INSPECTION OF PLATES FOLLOWED BY (I) SHALL BE PER ANNEX A3 OF TPI 1-2002 SEC. 3. A SEAL ON THIS DRAWING INDICATES ACCEPTANCE OF PROFESSIONAL ENGINEERING RESPONSIBILITY SOLELY FOR THE TRUSS COMPONENT DESIGN SHOWN. THE SUITABILITY AND USE OF THIS COMPONENT FOR ANY BUILDING IS THE RESPONSIBILITY OF THE BUILDING DESIGNER, PER ANSI/TPI 1 SEC. 2.

DOUGLAS FLEMING LICENSE No. 66648 STATE OF FLORIDA PROFESSIONAL ENGINEER
Dec 04 07

TC LL	PSF	REF CLB SUBST.
TC DL	PSF	DATE 2/23/07
BC DL	PSF	DRWG BRCLBSUB0207
BC LL	PSF	-ENG MLH/KAR
TOT. LD.	PSF	
DUR. FAC.		
SPACING		

PIGGYBACK DETAIL

100 MPH WIND, 30.00 FT MEAN HGT, ASCE 7-02 OR ASCE 7-05, CLOSED BLGD, LOCATED ANYWHERE IN ROOF, CAT II, EXP C, WIND TC DL=5.0 PSF, WIND BC DL=5.0 PSF.

80 MPH WIND, 30.00 FT MEAN HGT, SBC, ENCLOSED BLDG, LOCATED ANYWHERE IN ROOF WIND TC DL=5.0 PSF, WIND BC DL=5.0 PSF.

100 MPH WIND, 30.00 FT MEAN HGT, ASCE 7-98, CLOSED BLDG, LOCATED ANYWHERE IN ROOF, CAT II, EXP. C, WIND TC DL=5.0 PSF, WIND BC DL=5.0 PSF.

NOTE: TOP CHORDS OF TRUSSES SUPPORTING PIGGYBACK CAP TRUSSES MUST BE ADEQUATLY BRACED BY SHEATHING OR PURLINS. PROVIDE DIAGONAL BRACING OR OTHER SUITABLE ANCHORAGE TO PERMANENTLY RESTRAIN PURLINS.

DETAIL A

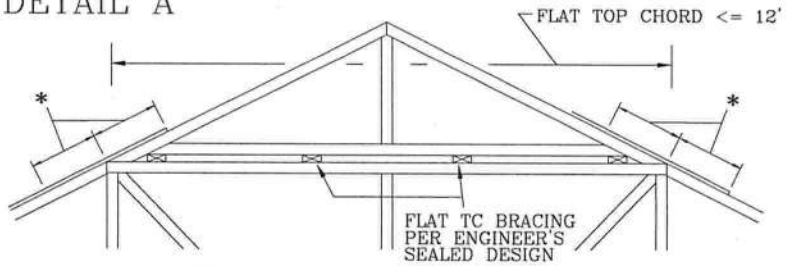

PIGGYBACK CAP TRUSS TOENAILED TO ALL TOP CHORD BRACING WITH (2) 10d COMMON (0.148"x3") NAILS.

* 12" MIN RIGID SHEATHING OVERLAP WITH 8d COMMON (0.131"x2.5") OR GUN NAILS IN OVERLAP ZONE SPACED AT 4" O.C.

DETAIL B

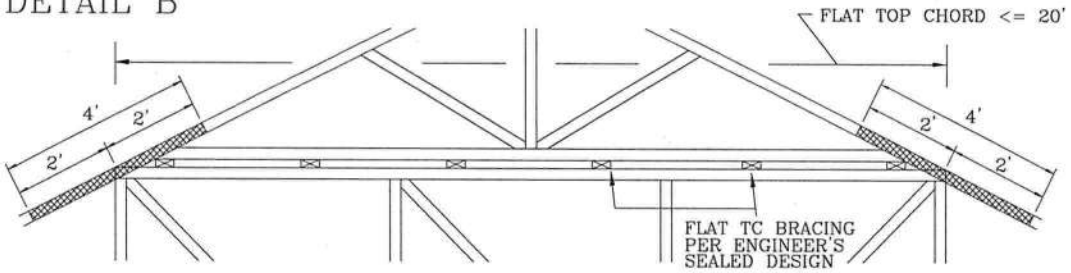

PIGGYBACK CAP TRUSS TOENAILED TO ALL TOP CHORD BRACING WITH (2) 10d COMMON (0.148"X3") NAILS AND SECURED WITH 2X4 #3 GRADE SCAB (1 SIDE ONLY) ATTACHED WITH 10d COMMON NAILS AT 4" O.C.

DETAIL C

CAP TRUSS TOENAILED TO TOP CHORD BRACING AND SECURED WITH 3X8 TRULOX PLATES (EACH FACE) AT EACH END AND AT 1/3 POINTS. CIRCLED NUMBER INDICATES REQUIRED NUMBER OF 0.120" X 1.375" NAILS PER FACE. SEE DRAWING 160TL FOR TRULOX INFORMATION.

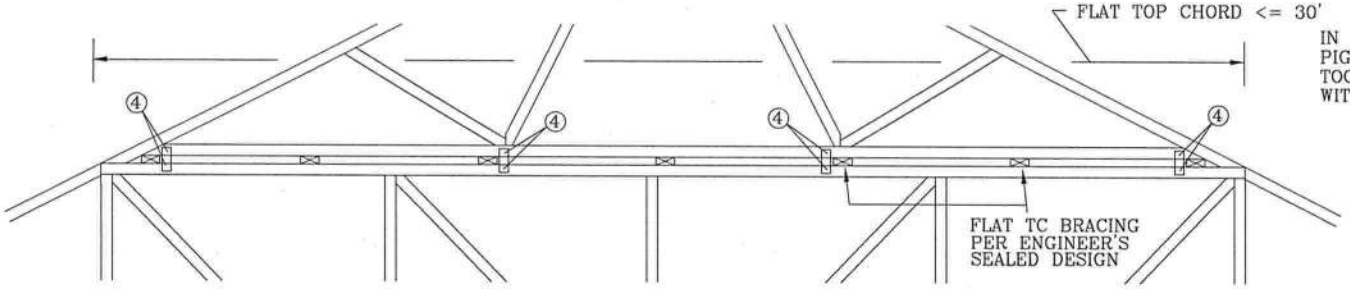

IN LIEU OF TRULOX CONNECTORS, ALPINE 62PB SPECIAL PIGGYBACK CONNECTORS MAY BE USED. SHOP APPLY TOOTHED PORTION, FIELD ATTACH TO MATING TRUSS WITH (4) 0.120" X 0.375" NAILS MINIMUM EACH FACE.

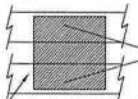

(4) 8d COMMON NAILS (0.131"X2.5")

8" X 8" X 1/2" RATED SHEATHING GUSSETS (EACH FACE) MAY BE USED IN LIEU OF TRULOX PLATES, ATTACH WITH (8) 8d COMMON NAILS PER GUSSET, (4) IN CAP BC AND (4) IN BASE TRUSS FLAT TC.

THIS DRAWING REPLACES DRAWINGS 581,670 & 961,860

ALPINE

ITW BUILDING COMPONENTS GROUP, INC.
POMPANO BEACH, FLORIDA

WARNING TRUSSES REQUIRE EXTREME CARE IN FABRICATING, HANDLING, SHIPPING, INSTALLING AND BRACING. REFER TO BCSI (BUILDING COMPONENT SAFETY INFORMATION), PUBLISHED BY TPI (TRUSS PLATE INSTITUTE, 218 NORTH LEE STR., SUITE 312, ALEXANDRIA, VA. 22314) AND WTCA (WOOD TRUSS COUNCIL OF AMERICA, 6300 ENTERPRISE LN, MADISON, WI 53719) FOR SAFETY PRACTICES PRIOR TO PERFORMING THESE FUNCTIONS. UNLESS OTHERWISE INDICATED, TOP CHORD SHALL HAVE PROPERLY ATTACHED STRUCTURAL PANELS AND BOTTOM CHORD SHALL HAVE A PROPERLY ATTACHED RIGID CEILING.

IMPORTANT FURNISH COPY OF THIS DESIGN TO INSTALLATION CONTRACTOR. ITW BCG, INC., SHALL NOT BE RESPONSIBLE FOR ANY DEVIATION FROM THIS DESIGN; ANY FAILURE TO BUILD THE TRUSS IN CONFORMANCE WITH TPI; OR FABRICATING, HANDLING, SHIPPING, INSTALLING & BRACING OF TRUSSES. DESIGN CONFORMS WITH APPLICABLE PROVISIONS OF NDS (NATIONAL DESIGN SPEC. BY AF&PA) AND TPI. ITW, BCG CONNECTOR PLATES ARE MADE OF 20/18/16GA (W,H/SS/K) ASTM A653 GRADE 40/60 (W,K/H,SS) GALV. STEEL. APPLY PLATES TO EACH FACE OF TRUSS AND, UNLESS OTHERWISE LOCATED ON THIS DESIGN, POSITION PER DRAWINGS 160A-Z. ANY INSPECTION OF PLATES FOLLOWED BY (I) SHALL BE PER ANNEX A3 OF TPI 1-2002 SEC. 3. A SEAL ON THIS DRAWING INDICATES ACCEPTANCE OF PROFESSIONAL ENGINEERING RESPONSIBILITY SOLELY FOR THE TRUSS COMPONENT DESIGN SHOWN. THE SUITABILITY AND USE OF THIS COMPONENT FOR ANY BUILDING IS THE RESPONSIBILITY OF THE BUILDING DESIGNER, PER ANSI/TPI 1 SEC. 2.

DOUGLAS FLEMING
LICENSE
No. 66648
04 '07
STATE OF
FLORIDA
PROFESSIONAL ENGINEER

TC LL		PSF
TC DL		PSF
BC DL		PSF
BC LL		PSF
TOT. LD.	MAX 60	PSF
DUR. FAC.	1.15	
SPACING	24.0"	

REF	PIGGYBACK
DATE	2/23/07
DRWG	PIGBACKA0207
-ENG	DLJ/KAR

PIGGYBACK DETAIL

TOP CHORD 2X4 #2 OR BETTER
BOT CHORD 2X4 #2 OR BETTER
WEBS 2X4 #3 OR BETTER

REFER TO SEALED DESIGN FOR DASHED PLATES.

SPACE PIGGYBACK VERTICALS AT 4' OC MAX.

TOP AND BOTTOM CHORD SPLICES MUST BE STAGGERED SO THAT ONE SPLICE IS NOT DIRECTLY OVER ANOTHER.

PIGGYBACK BOTTOM CHORD MAY BE OMITTED. ATTACH VERTICAL WEBS TO TRUSS TOP CHORD WITH 1.5X3 PLATE.

ATTACH PURLINS TO TOP OF FLAT TOP CHORD. IF PIGGYBACK IS SOLID LUMBER OR THE BOTTOM CHORD IS OMITTED, PURLINS MAY BE APPLIED BENEATH THE TOP CHORD OF SUPPORTING TRUSS.

REFER TO ENGINEER'S SEALED DESIGN FOR REQUIRED PURLIN SPACING.

THIS DETAIL IS APPLICABLE FOR THE FOLLOWING WIND CONDITIONS:

130 MPH WIND, 30' MEAN HGT, ASCE 7-98, ASCE 7-02 OR ASCE 7-05, CLOSED BLGD, LOCATED ANYWHERE IN ROOF, CAT II, EXP C, WIND TC DL=5 PSF, WIND BC DL=5 PSF

110 MPH WIND, 30' MEAN HGT, SBC ENCLOSED BLDG, LOCATED ANYWHERE IN ROOF WIND TC DL=5 PSF, WIND BC DL=5 PSF

FRONT FACE (E,*) PLATES MAY BE OFFSET FROM BACK FACE PLATES AS LONG AS BOTH FACES ARE SPACED 4' OC MAX.

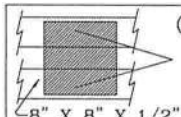

(4) 6d BOX (0.099"X 2.",MIN) NAILS.

8" X 8" X 1/2" RATED SHEATHING GUSSETS (EACH FACE) MAY BE USED IN LIEU OF TRULOX PLATES, ATTACH WITH (8) 6d BOX (0.099"X 2.",MIN) NAILS PER GUSSET.

(4) IN CAP BC AND (4) IN BASE TRUSS FLAT TC.

JOINT TYPE	SPANS UP TO			
	30'	34'	38'	52'
A	2X4	2.5X4	2.5X4	3X5
B	4X6	5X6	5X6	5X6
C	1.5X3	1.5X4	1.5X4	1.5X4
D	5X4	5X5	5X5	5X6
E	4X6 OR 3X6 TRULOX AT 4' OC, ROTATED VERTICALLY			

ATTACH TRULOX PLATES WITH (8) 0.120" X 1.375" NAILS, OR EQUAL, PER FACE PER PLY. (4) NAILS IN EACH MEMBER TO BE CONNECTED. REFER TO DRAWING 160 TL FOR TRULOX INFORMATION.

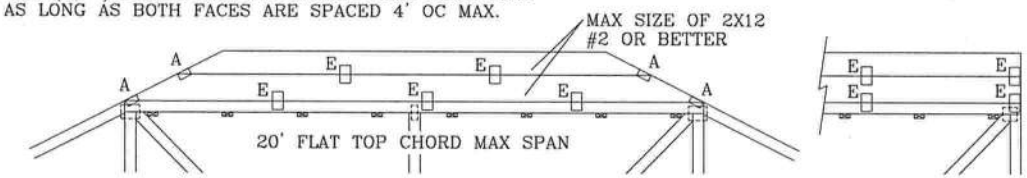

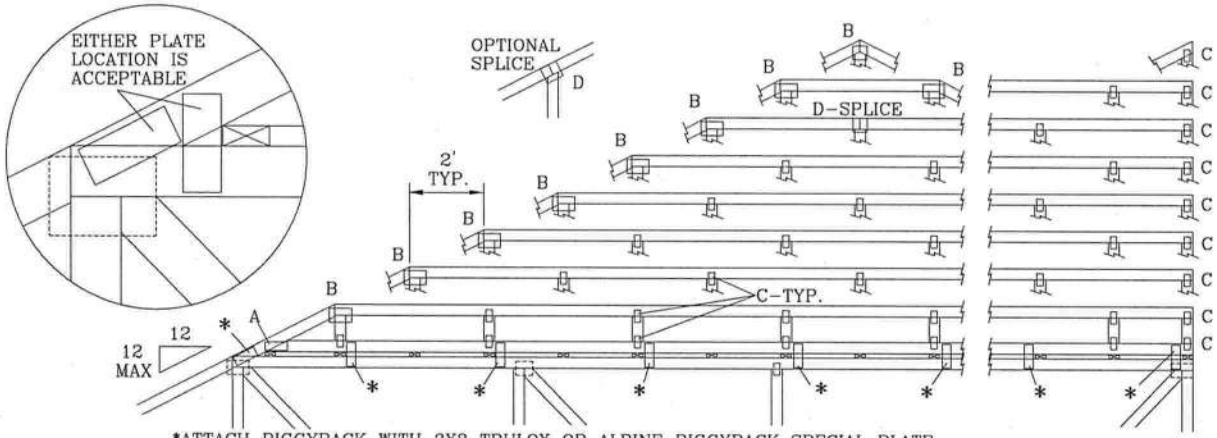

*ATTACH PIGGYBACK WITH 3X8 TRULOX OR ALPINE PIGGYBACK SPECIAL PLATE.

WEB BRACING CHART	
WEB LENGTH	REQUIRED BRACING
0' TO 7'9"	NO BRACING
7'9" TO 10'	1x4 "T" BRACE. SAME GRADE, SPECIES AS WEB MEMBER, OR BETTER, AND 80% LENGTH OF WEB MEMBER. ATTACH WITH 8d BOX (0.113"X 2.5",MIN) NAILS AT 4" OC.
10' TO 14'	2x4 "T" BRACE. SAME GRADE, SPECIES AS WEB MEMBER, OR BETTER, AND 80% LENGTH OF WEB MEMBER. ATTACH WITH 16d BOX (0.135"X 3.5",MIN) NAILS AT 4" OC

* PIGGYBACK SPECIAL PLATE

ATTACH TEETH TO THE PIGGYBACK AT THE TIME OF FABRICATION. ATTACH TO SUPPORTING TRUSS WITH (4) 0.120" X 1.375" NAILS PER FACE PER PLY. APPLY PIGGYBACK SPECIAL PLATE TO EACH TRUSS FACE AND SPACE 4' OC OR LESS.

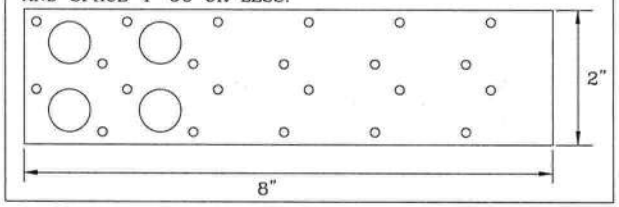

THIS DRAWING REPLACES DRAWINGS 634,016 634,017 & 847,045

ALPINE

ITW BUILDING COMPONENTS GROUP, INC.
POMPANO BEACH, FLORIDA

WARNING TRUSSES REQUIRE EXTREME CARE IN FABRICATING, HANDLING, SHIPPING, INSTALLING AND BRACING. REFER TO BCSI (BUILDING COMPONENT SAFETY INFORMATION), PUBLISHED BY TPI (TRUSS PLATE INSTITUTE, 218 NORTH LEE STR., SUITE 312, ALEXANDRIA, VA. 22314) AND WTCA (WOOD TRUSS COUNCIL OF AMERICA, 6300 ENTERPRISE LN, MADISON, WI 53719) FOR SAFETY PRACTICES PRIOR TO PERFORMING THESE FUNCTIONS. UNLESS OTHERWISE INDICATED, TOP CHORD SHALL HAVE PROPERLY ATTACHED STRUCTURAL PANELS AND BOTTOM CHORD SHALL HAVE A PROPERLY ATTACHED RIGID CEILING.

IMPORTANT FURNISH COPY OF THIS DESIGN TO INSTALLATION CONTRACTOR. ITW BCG, INC., SHALL NOT BE RESPONSIBLE FOR ANY DEVIATION FROM THIS DESIGN; ANY FAILURE TO BUILD THE TRUSS IN CONFORMANCE WITH TPI; OR FABRICATING, HANDLING, SHIPPING, INSTALLING & BRACING OF TRUSSES. DESIGN CONFORMS WITH APPLICABLE PROVISIONS OF NDS (NATIONAL DESIGN SPEC, BY AF&PA) AND TPI. ITW, BCG CONNECTOR PLATES ARE MADE OF 20/18/16GA (W,H/SS/K) ASTM A653 GRADE 40/60 (W,K/H,SS) GALV. STEEL. APPLY PLATES TO EACH FACE OF TRUSS AND, UNLESS OTHERWISE LOCATED ON THIS DESIGN, POSITION PER DRAWINGS 160A-Z. ANY INSPECTION OF PLATES FOLLOWED BY (I) SHALL BE PER ANNEX A3 OF TPI 1-2002 SEC. 3. A SEAL ON THIS DRAWING INDICATES ACCEPTANCE OF PROFESSIONAL ENGINEERING RESPONSIBILITY SOLELY FOR THE TRUSS COMPONENT DESIGN SHOWN. THE SUITABILITY AND USE OF THIS COMPONENT FOR ANY BUILDING IS THE RESPONSIBILITY OF THE BUILDING DESIGNER, PER ANSI/TPI 1 SEC. 2.

Dec 04

DOUGLAS FLEMING LICENSE No. 66648 STATE OF FLORIDA PROFESSIONAL ENGINEER

MAX LOADING
55 PSF AT 1.33 DUR. FAC.
50 PSF AT 1.25 DUR. FAC.
47 PSF AT 1.15 DUR. FAC.
SPACING 24.0"

REF	PIGGYBACK
DATE	2/23/07
DRWG	PIGBACKB0207
-ENG	DLJ/KAR

ASCE 7-02: 110 MPH WIND SPEED, 30' MEAN HEIGHT, ENCLOSED, I = 1.00, EXPOSURE C

MAX GABLE VERTICAL LENGTH

2X4 GABLE VERTICAL SPACING	SPECIES	GRADE \ BRACE	NO BRACES	(1) 1X4 "L" BRACE * GROUP A	(1) 1X4 "L" BRACE * GROUP B	(1) 2X4 "L" BRACE * GROUP A	(1) 2X4 "L" BRACE * GROUP B	(2) 2X4 "L" BRACE ** GROUP A	(2) 2X4 "L" BRACE ** GROUP B	(1) 2X6 "L" BRACE * GROUP A	(1) 2X6 "L" BRACE * GROUP B	(2) 2X6 "L" BRACE ** GROUP A	(2) 2X6 "L" BRACE ** GROUP B
24" O.C.	SPF HF	#1 / #2	3' 8"	6' 4"	6' 6"	7' 6"	7' 8"	8' 11"	9' 2"	11' 9"	12' 1"	14' 0"	14' 0"
		#3	3' 7"	5' 5"	5' 5"	7' 2"	7' 2"	8' 11"	8' 11"	11' 2"	11' 2"	14' 0"	14' 0"
		STUD	3' 7"	5' 5"	5' 5"	7' 1"	7' 1"	8' 11"	8' 11"	11' 1"	11' 1"	14' 0"	14' 0"
		STANDARD	3' 7"	4' 8"	4' 8"	6' 1"	6' 1"	8' 3"	8' 3"	9' 6"	9' 6"	12' 11"	12' 11"
	SP DFL	#1	4' 0"	6' 4"	6' 10"	7' 6"	8' 1"	8' 11"	9' 7"	11' 9"	12' 8"	14' 0"	14' 0"
		#2	3' 11"	6' 4"	6' 10"	7' 6"	8' 1"	8' 11"	9' 7"	11' 9"	12' 8"	14' 0"	14' 0"
		#3	3' 9"	5' 7"	5' 7"	7' 4"	7' 4"	8' 11"	9' 5"	11' 5"	11' 5"	14' 0"	14' 0"
		STUD	3' 9"	5' 6"	5' 6"	7' 3"	7' 3"	8' 11"	9' 5"	11' 4"	11' 4"	14' 0"	14' 0"
		STANDARD	3' 8"	4' 9"	4' 9"	6' 3"	6' 3"	8' 5"	8' 5"	9' 9"	9' 9"	13' 3"	14' 0"
16" O.C.	SPF HF	#1 / #2	4' 2"	7' 3"	7' 5"	8' 7"	8' 10"	10' 3"	10' 6"	13' 5"	13' 10"	14' 0"	14' 0"
		#3	4' 1"	6' 8"	6' 8"	8' 7"	8' 7"	10' 3"	10' 3"	13' 5"	13' 5"	14' 0"	14' 0"
		STUD	4' 1"	8' 0"	8' 0"	8' 7"	8' 7"	10' 3"	10' 3"	13' 5"	13' 5"	14' 0"	14' 0"
		STANDARD	4' 1"	5' 8"	5' 8"	7' 6"	7' 6"	10' 1"	10' 1"	11' 8"	11' 8"	14' 0"	14' 0"
	SP DFL	#1	4' 7"	7' 3"	7' 9"	8' 7"	9' 3"	10' 3"	11' 0"	13' 5"	14' 0"	14' 0"	14' 0"
		#2	4' 6"	7' 3"	7' 9"	8' 7"	9' 3"	10' 3"	11' 0"	13' 5"	14' 0"	14' 0"	14' 0"
		#3	4' 4"	6' 10"	6' 10"	8' 7"	9' 0"	10' 3"	10' 9"	13' 5"	14' 0"	14' 0"	14' 0"
		STUD	4' 4"	6' 9"	6' 9"	8' 7"	8' 11"	10' 3"	10' 9"	13' 5"	14' 0"	14' 0"	14' 0"
		STANDARD	4' 2"	5' 10"	5' 10"	7' 8"	7' 8"	10' 3"	10' 4"	11' 11"	11' 11"	14' 0"	14' 0"
12" O.C.	SPF HF	#1 / #2	4' 7"	8' 0"	8' 2"	9' 5"	9' 8"	11' 3"	11' 7"	14' 0"	14' 0"	14' 0"	14' 0"
		#3	4' 6"	7' 8"	7' 8"	9' 5"	9' 5"	11' 3"	11' 3"	14' 0"	14' 0"	14' 0"	14' 0"
		STUD	4' 6"	7' 8"	7' 8"	9' 5"	9' 5"	11' 3"	11' 3"	14' 0"	14' 0"	14' 0"	14' 0"
		STANDARD	4' 6"	6' 7"	6' 7"	8' 8"	8' 8"	11' 3"	11' 3"	13' 6"	13' 6"	14' 0"	14' 0"
	SP DFL	#1	5' 1"	8' 0"	8' 7"	9' 5"	10' 2"	11' 3"	12' 1"	14' 0"	14' 0"	14' 0"	14' 0"
		#2	4' 11"	8' 0"	8' 7"	9' 5"	10' 2"	11' 3"	12' 1"	14' 0"	14' 0"	14' 0"	14' 0"
		#3	4' 9"	7' 11"	7' 11"	9' 5"	9' 11"	11' 3"	11' 10"	14' 0"	14' 0"	14' 0"	14' 0"
		STUD	4' 9"	7' 9"	7' 9"	9' 5"	9' 11"	11' 3"	11' 10"	14' 0"	14' 0"	14' 0"	14' 0"
		STANDARD	4' 7"	6' 9"	6' 9"	8' 10"	8' 10"	11' 3"	11' 7"	13' 10"	13' 10"	14' 0"	14' 0"

BRACING GROUP SPECIES AND GRADES:

GROUP A:

SPRUCE-PINE-FIR

#1 / #2	STANDARD
#3	STUD

HEM-FIR

#2	STUD
#3	STANDARD

DOUGLAS FIR-LARCH

#3
STUD
STANDARD

SOUTHERN PINE

#3
STUD
STANDARD

GROUP B:

HEM-FIR

#1 & BTR
#1

SOUTHERN PINE

#1
#2

DOUGLAS FIR-LARCH

#1
#2

GABLE TRUSS DETAIL NOTES:

LIVE LOAD DEFLECTION CRITERIA IS L/240.

PROVIDE UPLIFT CONNECTIONS FOR 100 PLF OVER CONTINUOUS BEARING (5 PSF TC DEAD LOAD).

GABLE END SUPPORTS LOAD FROM 4' 0" OUTLOOKERS WITH 2' 0" OVERHANG, OR 12" PLYWOOD OVERHANG.

ATTACH EACH "L" BRACE WITH 10d NAILS.
* FOR (1) "L" BRACE: SPACE NAILS AT 2" O.C. IN 18" END ZONES AND 4" O.C. BETWEEN ZONES.
** FOR (2) "L" BRACES: SPACE NAILS AT 3" O.C. IN 18" END ZONES AND 6" O.C. BETWEEN ZONES.

"L" BRACING MUST BE A MINIMUM OF 80% OF WEB MEMBER LENGTH.

GABLE VERTICAL PLATE SIZES

VERTICAL LENGTH	NO SPLICE
LESS THAN 4' 0"	1X4 OR 2X3
GREATER THAN 4' 0", BUT LESS THAN 11' 6"	2X4
GREATER THAN 11' 6"	2.5X4

\+ REFER TO COMMON TRUSS DESIGN FOR PEAK, SPLICE, AND HEEL PLATES.

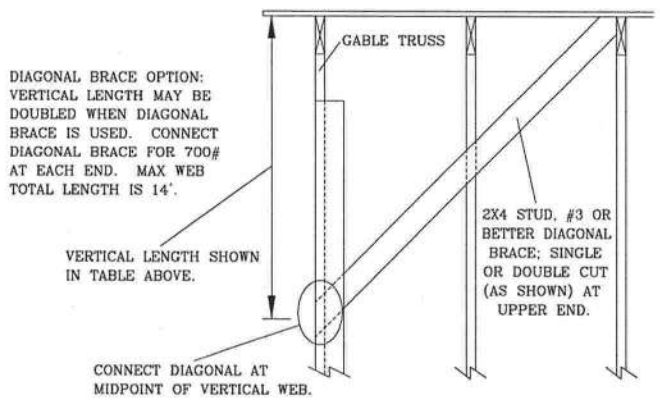

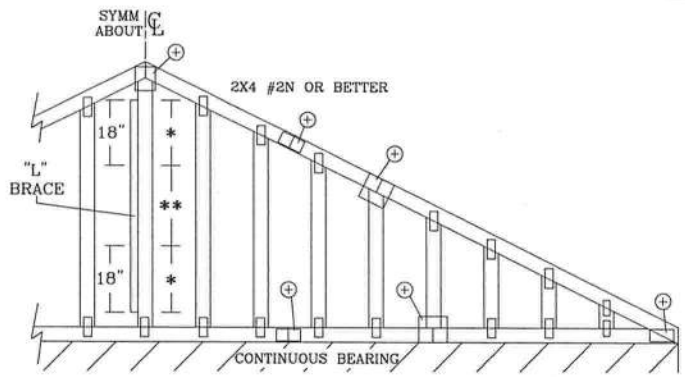

REFER TO CHART ABOVE FOR MAX GABLE VERTICAL LENGTH.

ALPINE

ITW BUILDING COMPONENTS GROUP, INC.
POMPANO BEACH, FLORIDA

WARNING TRUSSES REQUIRE EXTREME CARE IN FABRICATING, HANDLING, SHIPPING, INSTALLING AND BRACING. REFER TO BCSI (BUILDING COMPONENT SAFETY INFORMATION), PUBLISHED BY TPI (TRUSS PLATE INSTITUTE, 218 NORTH LEE STR., SUITE 312, ALEXANDRIA, VA. 22314) AND WTCA (WOOD TRUSS COUNCIL OF AMERICA, 6300 ENTERPRISE LN, MADISON, WI 53719) FOR SAFETY PRACTICES PRIOR TO PERFORMING THESE FUNCTIONS. UNLESS OTHERWISE INDICATED, TOP CHORD SHALL HAVE PROPERLY ATTACHED STRUCTURAL PANELS AND BOTTOM CHORD SHALL HAVE A PROPERLY ATTACHED RIGID CEILING.

IMPORTANT FURNISH COPY OF THIS DESIGN TO INSTALLATION CONTRACTOR. ITW BCG, INC., SHALL NOT BE RESPONSIBLE FOR ANY DEVIATION FROM THIS DESIGN; ANY FAILURE TO BUILD THE TRUSS IN CONFORMANCE WITH TPI; OR FABRICATING, HANDLING, SHIPPING, INSTALLING & BRACING OF TRUSSES. DESIGN CONFORMS WITH APPLICABLE PROVISIONS OF NDS (NATIONAL DESIGN SPEC. BY AF&PA) AND TPI. ITW, BCG CONNECTOR PLATES ARE MADE OF 20/18/16GA (W,H/SS/K) ASTM A653 GRADE 40/60 (W,K/H,SS) GALV. STEEL. APPLY PLATES TO EACH FACE OF TRUSS AND, UNLESS OTHERWISE LOCATED ON THIS DESIGN, POSITION PER DRAWINGS 160A-Z. ANY INSPECTION OF PLATES FOLLOWED BY (I) SHALL BE PER ANNEX A3 OF TPI 1-2002 SEC. 3. A SEAL ON THIS DRAWING INDICATES ACCEPTANCE OF PROFESSIONAL ENGINEERING RESPONSIBILITY SOLELY FOR THE TRUSS COMPONENT DESIGN SHOWN. THE SUITABILITY AND USE OF THIS COMPONENT FOR ANY BUILDING IS THE RESPONSIBILITY OF THE BUILDING DESIGNER, PER ANSI/TPI 1 SEC. 2.

DOUGLAS FLEMING LICENSE No. 65648 STATE OF FLORIDA PROFESSIONAL ENGINEER
Dec 04 '07

MAX. TOT. LD. 60 PSF

MAX. SPACING 24.0"

REF	ASCE7-02-GAB11030
DATE	2/23/07
DRWG	A11030EE0207
-ENG	

THIS DWG PREPARED FROM COMPUTER INPUT (LOADS & DIMENSIONS) SUBMITTED BY TRUSS MFR.

140 MPH WIND, 30.0 FT MEAN HGT, ASCE 7-98, PART. ENC. BLDG, LOCATED ANYWHERE IN ROOF, CAT II, EXP C, WIND TCDL=5.0 PSF, WIND BCDL=5.0 PSF.

140 MPH WIND, 30.0 FT MEAN HGT, ASCE 7-02, PART. ENC. BLDG, LOCATED ANYWHERE IN ROOF, CAT II, EXP C, WIND TCDL=5.0 PSF, WIND BCDL=5.0 PSF.

+ FOR VERTICAL WEBS LESS THAN 4'0": W1X4
FOR VERTICAL WEBS GREATER THAN 4'0" BUT NO MORE THAN 11'6": W2X4.

* SPLICE, PEAK, AND HEEL PLATES TO MATCH COMMON TRUSS.

** 2X4 OR GREATER CHORDS.

DROP GABLE WILL SUPPORT 4'0" OUTLOOKERS WITH 2'0" OVERHANG (DROP HEEL GABLE) SPACED 24" O.C., OR THE LOAD FROM 12" PLYWOOD OVERHANG (NOMINAL HEEL GABLE).

IT IS THE RESPONSIBILITY OF THE BUILDING DESIGNER TO DESIGN THE ROOF AND CEILING DIAPHRAGMS AND SPECIFY CONNECTIONS TO TRANSFER ALL OUT-OF-PLANE LOADS INTO THE ROOF AND CEILING DIAPHRAGMS.

THE BUILDING DESIGNER IS RESPONSIBLE FOR THE GABLE SHEAR WALL DESIGN, CEILING AND ROOF SHEATHING DIAPHRAGM CONNECTIONS, AND ALL TRUSS TO WALL CONNECTIONS.

++ 7/16 MINIMUM APA RATED SHEATHING PROPERLY ATTACHED WITH LONG DIMENSION PERPENDICULAR TO SUPPORTS.

R1 NOTE: NAIL STEPS OF LADDER TRUSS ONTO THE OUTSIDE PIECES WITH 2-16D NAILS AT EACH END.

R1 NOTE: ATTACH LADDER TRUSS TO TOP CHORD OF GABLE TRUSS WITH TWO ROWS OF 16D NAILS @ 8" O.C. STAGGERED 4"

BRACING DEFINITIONS:
NOTE: "END ZONE" EXISTS 18" AT BOTH ENDS OF VERTICAL WEB.

(A) (1) 2X4 SP #3 "L" BRACE. ATTACH WITH 0.128"X3" NAILS @ 2" OC. IN END ZONES; 4" OC. BETWEEN ZONES.

(B) (2) 2X4 SP #3 "L" BRACES. ATTACH EACH WITH 0.128"X3" NAILS @ 3" OC. IN END ZONES; 6" OC. BETWEEN ZONES.

(C) (1) 2X6 SP #2 N "L" BRACE. ATTACH WITH 0.128"X3" NAILS @ 2" OC. IN END ZONES; 4" OC. BETWEEN ZONES.

(D) (2) 2X6 SP #2 N "L" BRACES. ATTACH EACH WITH 0.128"X3" NAILS @ 3" OC. IN END ZONES; 6" OC. BETWEEN ZONES.

STUD SPACING / BRACING TABLE:

2X4 SP #3 STUD SPACING	DEFLECTION CRITERIA	NO BRACE	(1) 2X4 "L" BRACE TYPE (A)	(2) 2X4 "L" BRACE TYPE (B)	(1) 2X6 "L" BRACE TYPE (C)	(2) 2X6 "L" BRACE TYPE (D)
24"	L/360	-----	3' 1"	4' 2"	6' 3"	8' 0"
24"	L/180	-----	3' 4"	5' 7"	6' 3"	11' 0"
16"	L/360	-----	3'11"	5' 3"	7'10"	9'11"
16"	L/180	-----	4' 9"	7' 4"	9' 6"	11' 0"
12"	L/360	-----	4' 7"	6' 1"	8'11"	11' 0"
12"	L/180	-----	5'11"	8' 5"	11' 0"	11' 0"

OVERHANG DETAIL

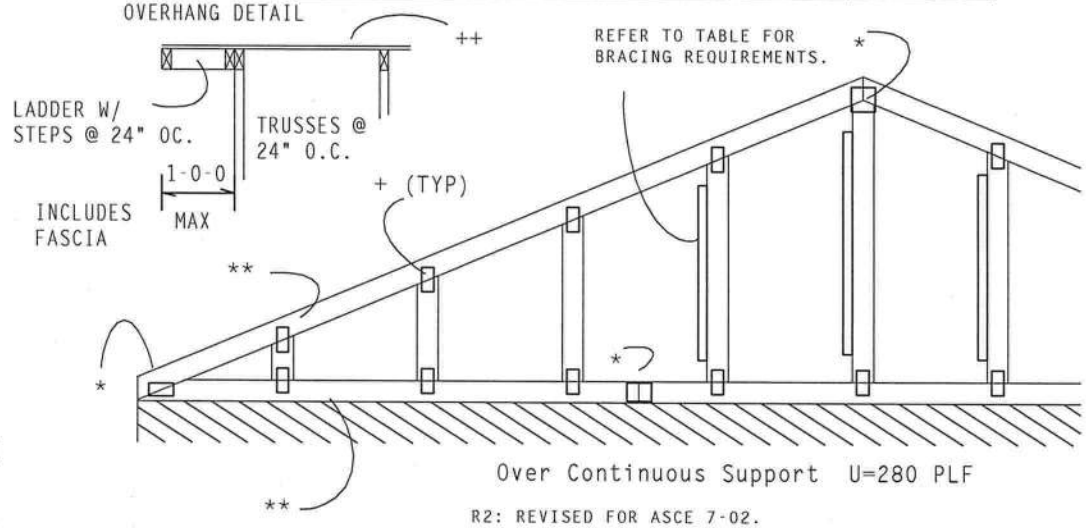

Over Continuous Support U=280 PLF

ALT. GABLE SHAPES:

Note: All Plates Are 2X4 Except As Shown.

PLT TYP. Wave TPI-95 Design Crit: TPI-1995(STD)

R3: REVISED DIAPHRAGM NOTE.
DLJ 02/27/200G

R2: REVISED FOR ASCE 7-02.
DLJ 09/30/2005
R1 REV 2-5-02 JWC
HI/-/1/-/-/R/-

DETAIL: 140GC
Scale =.375"/Ft.

ALPINE

Alpine Engineered Products, Inc.
1950 Marley Drive
Haines City, FL 33844
Certificate of Authorization # 567

WARNING TRUSSES REQUIRE EXTREME CARE IN FABRICATION, HANDLING, SHIPPING, INSTALLING AND BRACING. REFER TO BCSI 1-03 (BUILDING COMPONENT SAFETY INFORMATION), PUBLISHED BY TPI (TRUSS PLATE INSTITUTE, 583 D'ONOFRIO DR., SUITE 200, MADISON, WI 53719) AND WTCA (WOOD TRUSS COUNCIL OF AMERICA, 6300 ENTERPRISE LN, MADISON, WI 53719) FOR SAFETY PRACTICES PRIOR TO PERFORMING THESE FUNCTIONS. UNLESS OTHERWISE INDICATED, TOP CHORD SHALL HAVE PROPERLY ATTACHED STRUCTURAL PANELS AND BOTTOM CHORD SHALL HAVE A PROPERLY ATTACHED RIGID CEILING.

IMPORTANTFURNISH A COPY OF THIS DESIGN TO THE INSTALLATION CONTRACTOR. ALPINE ENGINEERED PRODUCTS, INC. SHALL NOT BE RESPONSIBLE FOR ANY DEVIATION FROM THIS DESIGN; ANY FAILURE TO BUILD THE TRUSS IN CONFORMANCE WITH TPI; OR FABRICATING, HANDLING, SHIPPING, INSTALLING & BRACING OF TRUSSES. DESIGN CONFORMS WITH APPLICABLE PROVISIONS OF NDS (NATIONAL DESIGN SPEC. BY AF&PA) AND TPI. ALPINE CONNECTOR PLATES ARE MADE OF 20/18/16GA (W,H/S/K) ASTM A653 GRADE 40/60 (W, K/H,S) GALV. STEEL. APPLY PLATES TO EACH FACE OF TRUSS AND, UNLESS OTHERWISE LOCATED ON THIS DESIGN, POSITION PER DRAWINGS 160A-Z. ANY INSPECTION OF PLATES FOLLOWED BY (1) SHALL BE PER ANNEX A3 OF TPI1-2002 SEC.3. A SEAL ON THIS DRAWING INDICATES ACCEPTANCE OF PROFESSIONAL ENGINEERING RESPONSIBILITY SOLELY FOR THE TRUSS COMPONENT DESIGN SHOWN. THE SUITABILITY AND USE OF THIS COMPONENT FOR ANY BUILDING IS THE RESPONSIBILITY OF THE BUILDING DESIGNER PER ANSI/TPI 1 SEC. 2.

DOUGLAS FLEMING
LICENSE
No. 66648
STATE OF FLORIDA
Dec 04, 0
PROFESSIONAL ENGINEER

TC LL	30.0 PSF	REF	R001-- 0
TC DL	7.0 PSF	DATE	03/27/02
BC DL	10.0 PSF	DRW	HCUSR001 02086015
BC LL	0.0 PSF	HC-ENG	DLJ/DLJ
TOT.LD.	47.0 PSF	SEQN-	24860
DUR.FAC.	1.33		
SPACING	24.0"	JREF-	1SV3001 R03

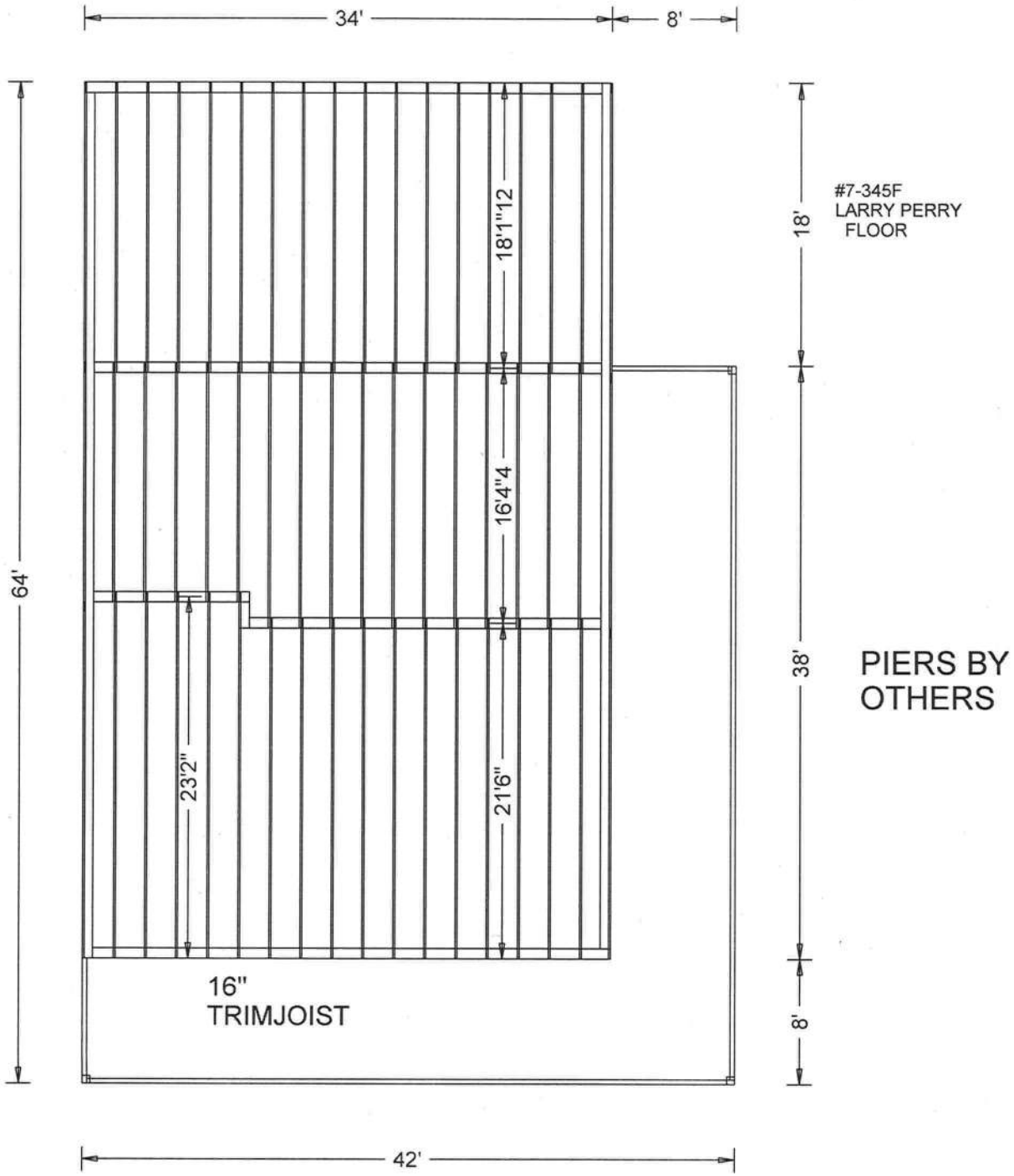

JOB DESCRIPTION:: OWNER BUILDER
/: Larry Perry

JOB NO:
7-345F

PAGE NO:
1 OF 1

26631

NOTICE OF COMMENCEMENT FORM
COLUMBIA COUNTY, FLORIDA

******THIS DOCUMENT MUST BE RECORDED AT THE COUNTY CLERKS OFFICE BEFORE YOUR FIRST INSPECTION.******

THE UNDERSIGNED hereby gives notice that improvement will be made to certain real property, and in accordance with Chapter 713, Florida Statutes, the following information is provided in this Notice of Commencement.

Tax Parcel ID Number 16-4S-17-08380-011

1. **Description of property: (legal description of the property and street address or 911 address)** 1003 SE CR

County, State of Florida Columbia, viz: Begin at the NE corner of the NW¼ of NW¼, Sec. 16, Township 4 South, Range 17 East, Columbia County, Florida, and run W 89 deg 34' 56" W along North line of said Sec., a distance of 807.3 feet, thence S 0 deg 00' 11" E 2562.83 feet to a POINT OF BEG, continue S 0 deg 00' 11" E 215.0 feet to the N right-of-way of State Road 252, thence S 68 deg 11' 46" E 238.18 feet thence N 1 deg 09' 13" W 301.77 feet, thence N 89 deg 59' 49" W 213.6 feet to POINT OF BEG., con. 1.27 acres, more or less.

2. **General description of improvement:** New Constrution

3. **Owner Name & Address** LARRY PERRY AND JoAnne PERRY

Interest in Property Owner

4. **Name & Address of Fee Simple Owner (if other than owner):** N/A

5. **Contractor Name** LARRY PERRY **Phone Number** 386-365-8765

Address 1003 SE CR 252 LAKE City, Fl.

6. **Surety Holders Name** None **Phone Number**

Address

Amount of Bond

7. **Lender Name** None

Address

Inst:200812001476 Date:1/24/2008 Time:10:54 AM
DC,P.DeWitt Cason,Columbia County Page 1 of 1

8. **Persons within the State of Florida designated by the Owner upon whom notices or other documents may be served as provided by section 718.13 (1)(a) 7; Florida Statutes:**

Name LARRY PERRY **Phone Number** 386-365-8765

Address 1003 SE CR 252 LAKE City Fl

9. **In addition to himself/herself the owner designates** N/A **of** _____ **to receive a copy of the Lienor's Notice as provided in Section 713.13 (1) – (a) 7. Phone Number of the designee** N/A

10. **Expiration date of the Notice of Commencement (the expiration date is 1 (one) year from the date of recording, (Unless a different date is specified)**

NOTICE AS PER CHAPTER 713, Florida Statutes:
The owner must sign the notice of commencement and no one else may be permitted to sign in his/her stead.

Larry E Perry
JoAnne T Perry
Signature of Owner

Sworn to (or affirmed) and subscribed before day of 24 of January, 2008

NOTARY STAMP/SEAL

Notary Public State of Florida
Susan Nettles Villegas
My Commission DD733130
Expires 12/15/2011

Susan Villegas
Signature of Notary

CERTIFICATE OF

OCCUPANCY

COLUMBIA COUNTY, FLORIDA

Department of Building and Zoning Inspection

This Certificate of Occupancy is issued to the below named permit holder for the building and premises at the below named location, and certifies that the work has been completed in accordance with the Columbia County Building Code.

Parcel Number 16-4S-17-08380-011

Building permit No. 000026631

Use Classification SFD/UTILITY

Fire: 6.42

Permit Holder LARRY PERRY,SR.

Waste: 16.75

Owner of Building LARRY PERRY,SR. & JOANNE PERRY

Total: 23.17

Location: 1003 SE CR 252

Date: 09/12/2008

Harry Dicks

Building Inspector

POST IN A CONSPICUOUS PLACE
(Business Places Only)

The *uniform load* span charts below indicate the maximum design spans (including a 1½" minimum bearing at each end) for each family of *Trim*Joist floor joists. Each chart is divided into columns which represent common design loadings and rows which show typical spacings. Most residential designs require a minimum of 55 psf loading. Floors used for heavy traffic and/or heavy floor coverings (e.g. Tile) should be designed at 60 psf minimum. All loads are broken down into *Live, Top-dead* and *Bottom-dead* components. For example, the 55 psf column is really 40 psf live plus 10 psf top-dead plus 5 psf bottom-dead for a total of 55 psf. Dead loads are the weight of construction materials and are always present for the whole life of the structure. Live loads, on the other hand, are transient and are never constant over the life of the structure. Select the appropriate column based on the *dead* loads of your construction materials. These charts are for *uniformly loaded, clear span, simply supported* joists. For special applications requiring concentrated loads, asymmetric continuous loads, cantilevers, or special bearing conditions please consult a *Trim*Joist representative or authorized dealer. The TPDS computer program can be used to analyze almost any loading and/or bearing condition.

11 ¼" Deep

Spacing \ Loading	55 PSF (40/10/5)	60 PSF (40/10/10)
12	24'- 0" L/497	24'- 0" L/497
16	22'- 0" L/485	22'- 0" L/485
19.2	21'- 2" L/453	21'- 2" L/453
24	19'- 7" L/455	19'- 7" L/455

16" Deep

Spacing \ Loading	55 PSF (40/10/5)	60 PSF (40/10/10)
12	28'- 0" L/676	28'- 0" L/676
16	28'- 0" L/507	28'- 0" L/507
19.2	27'- 4" L/453	27'- 4" L/453
24	25'- 5" L/450	25'- 5" L/450

14" Deep

Spacing		
12	26'- 0" L/633	26'- 0" L/633
16	26'- 0" L/475	26'- 0" L/475
19.2	24'-10" L/453	24'-10" L/453
24	23'- 0" L/452	22'- 0" L/517

18" Deep

Spacing		
12	30'- 0" L/710	30'- 0" L/710
16	30'- 0" L/532	30'- 0" L/532
19.2	29'-10" L/451	29'-10" L/451
24	27'- 7" L/468	27'- 3" L/473

Notes on Span Charts:

1. Spans are based on uniformly loaded joists and include allowances for repetitive use members.
2. Live loads of 40 psf are assumed, Additional dead loads should be chosen based on construction materials.
3. All *Trim*Joist floor joists have a TOP orientation and should not be installed upside-down.
4. Stiffness factors (L/xxx) assume a minimum ¾-inch span-rated subfloor that has been both *glued* and *nailed*.
5. Limit total reaction (per end) to that indicated in the Maximum Reaction Table at the right.
6. Do not apply center supports, cantilevers, concentrated, or asymmetrical continuous loads without first consulting a *Trim*Joist representative.

Maximum Reaction Table

Width	1½	3½	5½
Max	3000	3500	4000

Width is the width of the loaded wall above, or the bearing wall width whichever is less.

A Note About Floor Stiffness: Floor performance is greatly influenced by joist stiffness. Experience has shown that a floor system designed to minimum code acceptance may not meet the expectations of discerning owners. *Trim*Joist Corporation strongly recommends that floor spans be limited to those indicated in the charts above. The numbers in these charts far exceed minimum code requirements and are based on both gluing *and* nailing the subfloor. In cases where the subfloor is nailed only, spans remain the same, but the stiffness must be reduced by 20%. For optimal performance use screws in lieu of nails.

Opening Sizes

	J12	J14	J16	J18
H	11¼"	14"	16"	18"
D	5"	8"	9"	10"
R1	8x16	10x24	12x24	14x24
R2	4x9	4x10 6x6	4x12 6x8	4x14 6x10 8x8

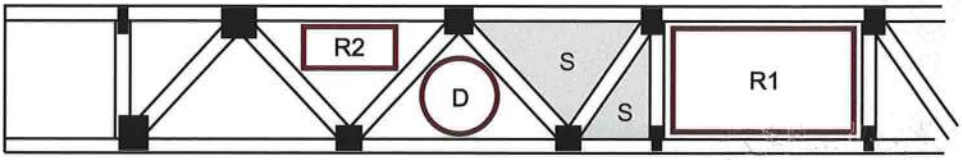

1. All sizes given are in inches and denote maximum expected clearance.
2. Rectangular opening (R1) is provided at centerline of stock length.
3. Only opening D available in 4' stock length (one opening only).
4. Only opening R1 available in 6' and 8' stock length.
5. Openings R2 & D not applicable in shaded areas (s).

Sept. 22, 2004

Good Framing Practice...

DO Install *Trim*Joists right side up. TOP is stamped on the top of each joist.

DO Make sure that each *Trim*Joist bears on the bottom flange beneath the *Trim*End section or beneath the first metal plate if the *Trim*End section has been removed.

DO Use strongback stiffeners. Although not required for structural performance, strongback adds additional resistance to impact loadings.

DO Provide appropriate bearing width at each end of the *Trim*Joist. The required width can be found in the Maximum Reaction Table above. Use vertical web stiffeners where reactions exceed these values.

DO Use *Trim*Joist approved hangers for flush-mounted bearing conditions. These may be purchased from your local *Trim*Joist dealer.

DO Use an appropriately rated sub-floor that has been both glued and nailed/screwed to the top flange of the *Trim*Joist.

DO Consult your *Trim*Joist dealer or representative about special loading or bearing conditions not addressed in this Application Guide.

DO NOT cut any part of the *Trim*Joist except for the *Trim*End sections which are specifically designed to be field cut.

DO NOT remove, cut or alter any metal plate connector on the *Trim*Joist without first consulting a factory engineer.

DO NOT install the *Trim*Joist upside down without first consulting a *Trim*Joist factory engineer.

DO NOT use a *Trim*Joist as a header or beam except as may be instructed by a *Trim*Joist engineer.

DO NOT allow the *Trim*Joist to be supported by the top flange. All support must be from under the bottom flange.

DO NOT depend on "toe nailing" to provide adequate support capacity for flush-mounted framing. Consult your local *Trim*Joist dealer or a *Trim*Joist factory engineer for proper hanger selection.

DO NOT apply special support or load conditions without first consulting a *Trim*Joist representative.

Copyright © 1997- 2004 -TrimJoist Corporation - USA - All Rights Reserved

TrimJoist, *Trim*Joist and ***Trim*End** are trademarks of the TrimJoist Corporation.