COMM SW COR OF SE1/4, E 964.39 F FOR POB, CONT N 1200.60 FT, E 37 1200.60 FT, W 371.91 FT TO POB &

CREEL JANET L
216 SW HILLCREST ST
LAKE CITY, FL 32025

2025

28-4S-17-08836-003

COLUMBIA COUNTY PROPERTY

BUILDING CHARACTERISTICS

ELEMENT	CD	CONSTRUCTION
Exterior Wall	31	VINYL SID 100
Roof Structur	03	GABLE/HIP 100
Roof Cover	03	COMP SHNGL 100
Interior Wall	05	DRYWALL 100
Interior Floo	14	CARPET 90
Interior Floo	08	SHT VINYL 10
Air Condition	03	CENTRAL 100
Heating Type	04	AIR DUCTED 100
Bedrooms		2 100
Bathrooms		2 100
Frame	01	NONE 100
Stories	1.5	1.5 100
Architectual	05	CONV 100
Units		0 100
Condition Adj	01	01 100
Kitchen Adjus	01	01 100
Quality	05	05
DOR CODE	5000	IMPROVED AG
MAP NUM		MKT AREA 02
NEIGHBORHOOD/LOC	28417.00	1.00/

AREA TYPE	TOTAL GROSS AREA	PCT OF BASE	YEAR	TOT ADJ AREA	SUBAREA MARKET VALUE
APT	672	100		672	38,019
BAS	1,744	100		1,744	98,669
FHS	280	60		168	9,505
FOP	13	30		4	226
FOP	96	30		29	1,641
FOP	480	30		144	8,147
FST	96	55		53	2,998
UOP	360	20		72	4,074
TOTALS	3,741			2,886	163,278

MARKET ADJUSTMENTS

TYPE	MDL	EFF. AREA	TOT ADJ PTS	EFF. BASE RATE	REPL. COST NEW	AYB	EYB	ECON	FNCT		NORM	% COND
0100	01	2,886	82.8979	87.04	251,197	1995	1995	0	0	0	35.00	65.00

2 SINGLE FAM - 100% - 2021 Heated Area: 2696 HX Base Yr 2021

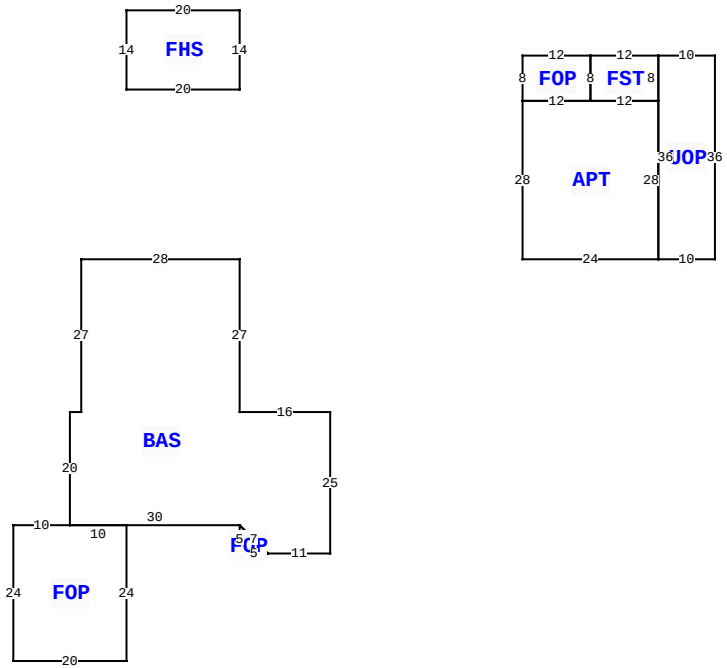

216 SW HILLCREST ST, LAKE CITY

BLD DATE		LGL DATE	
XF DATE		LAND DATE	05/16/2024 MLU
INC DATE		AG DATE	

VALUATION SUMMARY

VALUATION BY		STANDARD
Tax Group: 2	Tax Dist:	
BUILDING MARKET VALUE		163,278
TOTAL MARKET OB/XF VALUE		8,000
TOTAL LAND VALUE - MARKET		103,500
TOTAL MARKET VALUE		187,568
SOH/AGL Deduction		58,012
ASSESSED VALUE		129,556
TOTAL EXEMPTION VALUE	HX HB	50,722
BASE TAXABLE VALUE		78,834
TOTAL JUST VALUE		274,778
NCON VALUE		0
INCOME VALUE		
PREVIOUS YEAR MKT VALUE		274,778

PERMIT NUM	DESCRIPTION	AMT	ISSUED
10278	ADDN SFR	85	10/04/1995
8380	M H	125	05/13/1994

SALES DATA

OFF RECORD Number	DATE	TYPE INST	Q U	V I	RSN CD	SALE PRICE
1472/1501	8/03/2022	LE	U	I	14	100
GRANTOR: CREEL JANET L						
GRANTEE: CREEL JANET L						
1471/2192	7/11/2022	LE	U	I	14	100
GRANTOR: CREEL JANET L						
GRANTEE: CREEL JANET L						

BUILDING NOTES

BUILDING DIMENSIONS

BAS= W28 S27 W2 S20 FOP= W10S24 E20 N24 W10$ E30 FOP= S5 E5 U5 L5 $ R5 D5 E11 N25 W16 N27$ PTR= N30 FHS= N14 W20 S14 E20$ S30$ PTR= E50 APT= E24 UOP= E10 N36 W10 S36$ N28 FST= N8 W12 S8 E12$ W12 FOP= N8 W12 S8 E12$ W12 S28 $ W50$.

EXTRA FEATURES

LN	OB/XF CODE	DESCRIPTION	BLD	CAP	L	W	UNITS	UT	Adj R	ADJ UNIT PRICE	ORIG COND	YEAR ON	YEAR ACTUAL	Q	% COND	OB/XF MKT VALUE	NOTES
1	0255	MBL HOME S	0	100	52	12	1.00	UT	0.00	0.00	100	1970	1970	3	100	1,000	
2	9945	Well/Sept	0	100	0	0	1.00	UT	7,000.00	7,000.00	100			3	100	7,000	

LAND DESCRIPTION

TOTAL OB/XF 8,000

LN	USE CODE	CLS	LAND USE DESCRIPTION	CAP	RD	LOC ZONE	FRONT	DEPTH	TOT LND UTS	UNIT TYPE	DT	DPTH FACT	% COND	TOT ADJ	UNIT PRICE	ADJ UNIT PRICE	LAND VALUE	OTHER ADJUSTMENTS AND NOTES	YEAR	DENSITY	DECL	FRZ	YR	CONSRV
1	0100	C	SFR	100		A-1	0.00	0.00	1.00	AC		1.00	1.00	1.00	9,000.00	9,000.00	9,000							
2	0200	C	MBL HM	100		00	0.00	0.00	0.50	AC		1.00	1.00	1.00	9,000.00	9,000.00	4,500							
3	5600	A	TIMBER 3	0		00	0.00	0.00	5.05	AC		1.00	1.00	1.00	283.00	283.00	1,429							
4	6200	A	PASTURE 3	0			0.00	0.00	4.95	AC		1.00	1.00	1.00	275.00	275.00	1,361							
5	9910	M	MKT.VAL.AG	0			0.00	0.00	10.00	AC		1.00	1.00	1.00	9,000.00	9,000.00	90,000							

REVIEW DATE 04/10/2013 BY TW Total Acres: 11.50 Total Land Value: 16,290 Market: 90,000 Agricultural: 2,790 Common: 13,500 PRINTED 02/26/2025 BY SYS