DATE 11/29/2005

Columbia County Building Permit

This Permit Expires One Year From the Date of Issue

PERMIT
000023903

APPLICANT SUSAN FAIR PHONE 752-5218

ADDRESS 180 NW AMENITY COURT LAKE CITY FL 32055

OWNER CORNERSTONE DEVELOPERS PHONE 752-5218

ADDRESS 215 SE GREGORY GLEN LAKE CITY FL 32025

CONTRACTOR BRYAN ZECHER PHONE 752-8653

LOCATION OF PROPERTY BAYA, TR ON OLD COUNTRY CLUB RD, TL ON GREGORY GLEN, 4TH HOUSE ON LEFT

TYPE DEVELOPMENT SFD,UTILITY ESTIMATED COST OF CONSTRUCTION 60000.00

HEATED FLOOR AREA 1200.00 TOTAL AREA 1665.00 HEIGHT .00 STORIES 1

FOUNDATION CONC WALLS FRAMED ROOF PITCH 6/12 FLOOR SLAB

LAND USE & ZONING RSF-2 MAX. HEIGHT 15

Minimum Set Back Requirments: STREET-FRONT 25.00 REAR 15.00 SIDE 10.00

NO. EX.D.U. 0 FLOOD ZONE X PP DEVELOPMENT PERMIT NO.

PARCEL ID 15-4S-17-08359-119 SUBDIVISION COUNTRY SIDE ESTATES

LOT 19 BLOCK PHASE UNIT TOTAL ACRES

000000898		CBC054575	Susan Fai	
Culvert Permit No.	Culvert Waiver	Contractor's License Number	Applicant/Owner/Contractor	
CULVERT	05-1175-N	BK	JH	Y
Driveway Connection	Septic Tank Number	LU & Zoning checked by	Approved for Issuance	New Resident

COMMENTS: ONE FOOT ABOVE THE ROAD, NOC ON FILE
ALTERNATE TERMIT TREATMENT RECEIVED, COMPACTION TEST RECEIVED/95% OR GREATER

Check # or Cash 2116

FOR BUILDING & ZONING DEPARTMENT ONLY

Temporary Power _____ date/app. by
Foundation _____ date/app. by
Monolithic _____ (footer/Slab) date/app. by
Under slab rough-in plumbing _____ date/app. by
Slab _____ date/app. by
Sheathing/Nailing _____ date/app. by
Framing _____ date/app. by
Rough-in plumbing above slab and below wood floor _____ date/app. by
Electrical rough-in _____ date/app. by
Heat & Air Duct _____ date/app. by
Peri. beam (Lintel) _____ date/app. by
Permanent power _____ date/app. by
C.O. Final _____ date/app. by
Culvert _____ date/app. by
M/H tie downs, blocking, electricity and plumbing _____ date/app. by
Pool _____ date/app. by
Reconnection _____ date/app. by
Pump pole _____ date/app. by
Utility Pole _____ date/app. by
M/H Pole _____ date/app. by
Travel Trailer _____ date/app. by
Re-roof _____ date/app. by

BUILDING PERMIT FEE $ 300.00 CERTIFICATION FEE $ 8.32 SURCHARGE FEE $ 8.32

MISC. FEES $ .00 ZONING CERT. FEE $ 50.00 FIRE FEE $ .00 WASTE FEE $

FLOOD DEVELOPMENT FEE $ FLOOD ZONE FEE $ 25.00 CULVERT FEE $ 25.00 **TOTAL FEE** 416.64

INSPECTORS OFFICE Dale Tedder CLERKS OFFICE CH

NOTICE: IN ADDITION TO THE REQUIREMENTS OF THIS PERMIT, THERE MAY BE ADDITIONAL RESTRICTIONS APPLICABLE TO THIS PROPERTY THAT MAY BE FOUND IN THE PUBLIC RECORDS OF THIS COUNTY. AND THERE MAY BE ADDITIONAL PERMITS REQUIRED FROM OTHER GOVERNMENTAL ENTITIES SUCH AS WATER MANAGEMENT DISTRICTS, STATE AGENCIES, OR FEDERAL AGENCIES.

"WARNING TO OWNER: YOUR FAILURE TO RECORD A NOTICE OF COMMENCEMENT MAY RESULT IN YOUR PAYING TWICE FOR IMPROVEMENTS TO YOUR PROPERTY. IF YOU INTEND TO OBTAIN FINANCING, CONSULT WITH YOUR LENDER OR AN ATTORNEY BEFORE RECORDING YOUR NOTICE OF COMMENCEMENT."

This Permit Must Be Prominently Posted on Premises During Construction

PLEASE NOTIFY THE COLUMBIA COUNTY BUILDING DEPARTMENT AT LEAST 24 HOURS IN ADVANCE OF EACH INSPECTION, IN ORDER THAT IT MAY BE MADE WITHOUT DELAY OR INCONVIENCE, PHONE 758-1008. THIS PERMIT IS NOT VALID UNLESS THE WORK AUTHORIZED BY IT IS COMMENCED WITHIN 6 MONTHS AFTER ISSUANCE.

The Issuance of this Permit Does Not Waive Compliance by Permittee with Deed Restrictions.

Columbia County Building Department
Culvert Permit

Culvert Permit No.
000000898

DATE 11/29/2005 PARCEL ID # 15-4S-17-08359-119

APPLICANT SUSAN FAIR PHONE 752-5218

ADDRESS 180 NW AMENITY COURT LAKE CITY FL 32055

OWNER CORNERSTONE DEVELOPERS PHONE 752-1711

ADDRESS 215 SE GREGORY GLEN LAKE CITY FL 32025

CONTRACTOR BRYAN ZECHER PHONE 752-8653

LOCATION OF PROPERTY BAYA, TR ON OLD COUNTRY CLUB RD, TL ON GREGORY GLEN, 4TH LOT ON LEFT

SUBDIVISION/LOT/BLOCK/PHASE/UNIT COUNTRY SIDE EST 19

SIGNATURE Susan Fair

INSTALLATION REQUIREMENTS

[X] Culvert size will be 18 inches in diameter with a total lenght of 32 feet, leaving 24 feet of driving surface. Both ends will be mitered 4 foot with a 4 : 1 slope and poured with a 4 inch thick reinforced concrete slab.

INSTALLATION NOTE: Turnouts will be required as follows:
a) a majority of the current and existing driveway turnouts are paved, or;
b) the driveway to be served will be paved or formed with concrete.
Turnouts shall be concrete or paved a minimum of 12 feet wide or the width of the concrete or paved driveway, whichever is greater. The width shall conform to the current and existing paved or concreted turnouts.

[ ] Culvert installation shall conform to the approved site plan standards.

[ ] Department of Transportation Permit installation approved standards.

[ ] Other

ALL PROPER SAFETY REQUIREMENTS SHOULD BE FOLLOWED DURING THE INSTALATION OF THE CULVERT.

135 NE Hernando Ave., Suite B-21
Lake City, FL 32055
Phone: 386-758-1008 Fax: 386-758-2160

Amount Paid 25.00

COLUMBIA COUNTY GATEWAY TO FLORIDA

Columbia County Building Permit Application

CK# 2116

Revised 9-23-04

For Office Use Only Application # 0511-71 Date Received 11-17-05 By G Permit # 8998/23903
Application Approved by - Zoning Official BLK Date 21.11.05 Plans Examiner OKJTH Date 11-28-05
Flood Zone X Per PLAT Development Permit N/A Zoning RSF-2 Land Use Plan Map Category RES. LOW DEN.
Comments

Applicants Name ~~CHRIS COX~~ 180 NW Amenity Ct. SUSAN FAIR Phone 386-867-0633
Address ~~252 NW IVY GLN.~~ LAKE CITY FL 32055
Owners Name CORNERSTONE DEVELOPERS Phone 386-852-1711
911 Address 215 SE GREGORY GLEN LAKE CITY, FL. 32025
Contractors Name BRYAN ZECHER Phone 386-752-8653
Address PO BOX 845 LAKE CITY FL 32056
Fee Simple Owner Name & Address NA
Bonding Co. Name & Address NA
Architect/Engineer Name & Address MARK DISOSWAY PO BOX 568 LAKE CITY FL 32056
Mortgage Lenders Name & Address NA

Circle the correct power company - FL Power & Light - (Clay Elec.) - Suwannee Valley Elec. - Progressive Energy
Property ID Number 15-4S-17E-08359-119 Estimated Cost of Construction 60,000.00
Subdivision Name COUNTRY SIDE ESTATES Lot 19 Block ___ Unit ___ Phase ___
Driving Directions BAYA TO OLD COUNTRY CLUB RD. GO RIGHT TO GREGORY GLEN. 4TH LOT ON LEFT.

Type of Construction FRAME & HARDI Number of Existing Dwellings on Property 0
Total Acreage 40 ACRES Lot Size 1/2 ACRE Do you need a (Culvert Permit) or Culvert Waiver or Have an Existing Drive
Actual Distance of Structure from Property Lines - Front 27' Side 55' Side 55' Rear 65'
Total Building Height 15'6½" Number of Stories 1 Heated Floor Area 1200 Roof Pitch 6/12
Porch 40 GARAGE 425 TOTAL 1665

Application is hereby made to obtain a permit to do work and installations as indicated. I certify that no work or installation has commenced prior to the issuance of a permit and that all work be performed to meet the standards of all laws regulating construction in this jurisdiction.

OWNERS AFFIDAVIT: I hereby certify that all the foregoing information is accurate and all work will be done in compliance with all applicable laws and regulating construction and zoning.

WARNING TO OWNER: YOUR FAILURE TO RECORD A NOTICE OF COMMENCMENT MAY RESULT IN YOU PAYING TWICE FOR IMPROVEMENTS TO YOUR PROPERTY. IF YOU INTEND TO OBTAIN FINANCING, CONSULT WITH YOUR LENDER OR ATTORNEY BEFORE RECORDING YOUR NOTICE OF COMMENCEMENT.

Chris W. Cox — Owner Builder or Agent (Including Contractor)

SUSAN ANN FAIR
MY COMMISSION # DD 342845
EXPIRES: August 14, 2008
Bonded Thru Notary Public Underwriters

Chris W. Cox — Contractor Signature
Contractors License Number CBC054575
Competency Card Number
NOTARY STAMP/SEAL

STATE OF FLORIDA
COUNTY OF COLUMBIA

Sworn to (or affirmed) and subscribed before me
this 17 day of Nov. 20 05.
Personally known ✓ or Produced Identification ___

Susan Ann Fair — Notary Signature

Notice of Intent for Preventative Treatment for Termites

(As required by Florida Building Code 104.2.6)

Date: 11-17-05

215 SE GREGORY GLN — LAKE CITY

(Address of Treatment or Lot/Block of Treatment) — City

Florida Pest Control & Chemical Co.

www.flapest.com

Product to be used: Bora-Care Termiticide (Wood Treatment)

Chemical to be used: 23% Disodium Octaborate Tetrahydrate

Application will be performed onto structural wood at dried-in stage of construction. Bora-Care Termiticide application shall be applied according to EPA registered label directions as stated in the Florida Building Code Section 1861.1.8

(Information to be provided to local building code offices prior to concrete foundation installation.)

6/04

UNIVERSAL
ENGINEERING SCIENCES
Consultant In: Geotechnical Engineering, Environmental Sciences, Construction Materials Testing
4475 SW 35th Terrace, Gainesville, Florida 32608 (352) 372-3392

Order No.: 27915-001-01
Report No.: 6379
Date: November 14, 2005

REPORT ON IN-PLACE DENSITY TESTS

Client: Cornerstone Development
P.O. Box 1867
Lake City, FL 32056

Project: Country Side Estates, Lot No. 19, Permit Not Posted, Lake City, Columbia County, FL

Area Tested: Fill Beneath Proposed Building Pad

Course: Final Grade **Depth of Test:** 0-1'

Type of Test: ASTM D-2922 **Date Tested:** 11-09-05

Remarks: The tests below meet the minimum 95 percent relative soil compaction requirement of Laboratory Modified Proctor maximum dry density (ASTM D-1557).

TEST LOCATION	LABORATORY RESULTS		FIELD TEST RESULTS		
Description of Test Location	Maximum Density (pcf)	Optimum Moisture (%)	Dry Density (pcf)	Field Moisture (%)	Soil Compaction (%)
1. Approximate Center of Pad	112.0	11.0	106.6	10.1	95.2
2. Approximately 15' North of Center of Pad	112.0	11.0	107.2	10.0	95.7
3. Approximate Center of South End of Pad	112.0	11.0	106.4	10.6	95.0

11/15/05

Technician: TI/ec

Andrew T. Schmid, P.E.
FL Professional Engineer No. 56022

STATE OF FLORIDA
DEPARTMENT OF HEALTH
APPLICATION FOR ONSITE SEWAGE DISPOSAL SYSTEM CONSTRUCTION PERMIT

Permit Application Number 05-1175N

---------- PART II - SITEPLAN ----------

e: 1 inch = 50 feet.

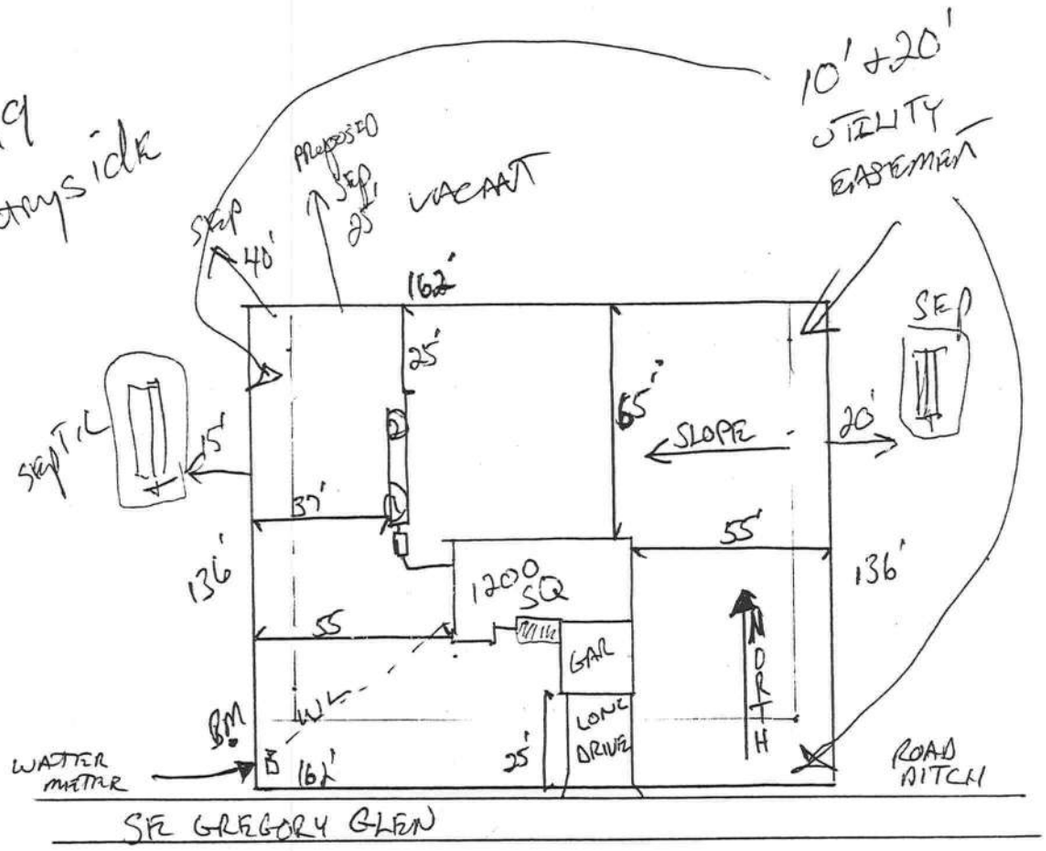

tes: _____

e Plan submitted by: Rodn D Z-O

MASTER CONTRACTOR

Date 11/9/05

n Approved ✓ Not Approved ____

Columbia County Health Department

Zm s 2n

ALL CHANGES MUST BE APPROVED BY THE COUNTY HEALTH DEPARTMENT

4015, 10/99 (Replaces HRS-H Form 4016 which may be used)
ok Number: 5744-002-4015-6)

STATE OF FLORIDA
DEPARTMENT OF HEALTH
APPLICATION FOR ONSITE SEWAGE DISPOSAL SYSTEM CONSTRUCTION PERMIT

Permit Application Number_____

---------- PART II - SITEPLAN ----------

le: 1 inch = 50 feet.

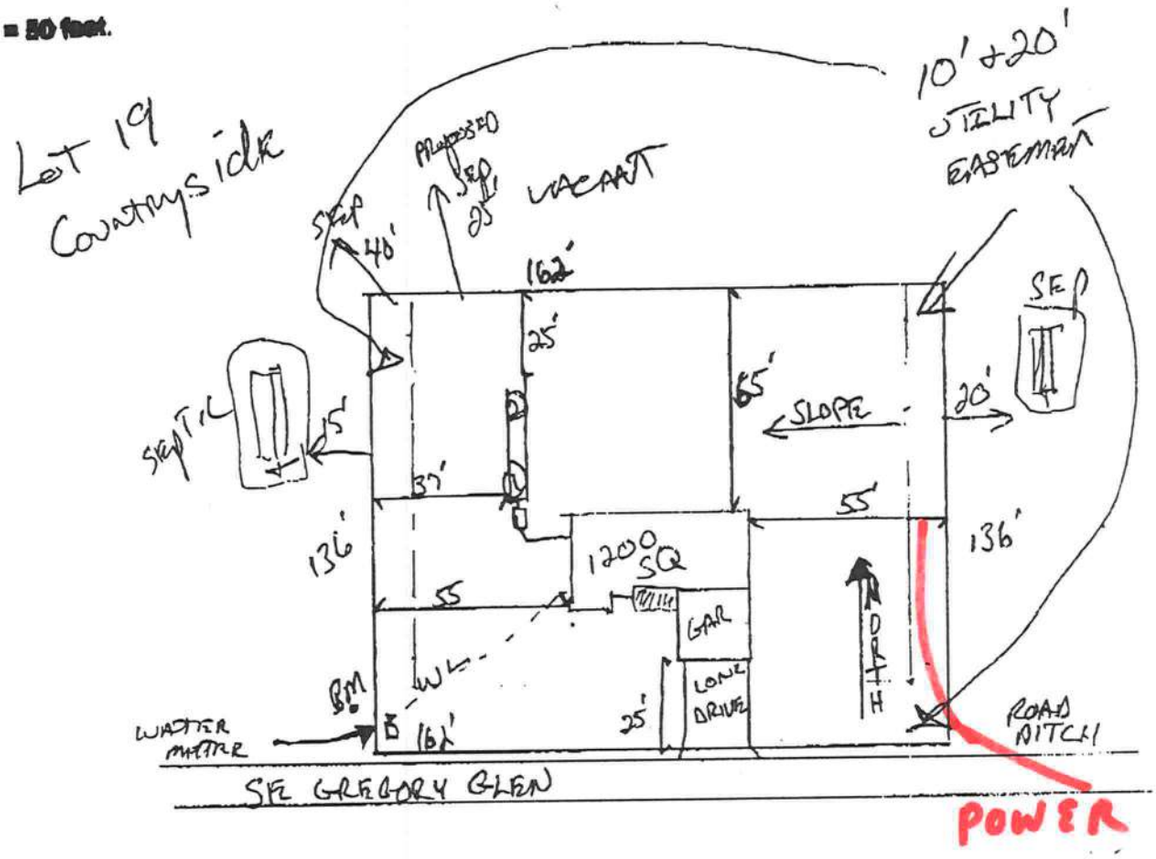

tes: _____

_____

_____

_____

s Plan submitted by: Robert D. Zeigler MASTER CONTRACTOR

Date_____

in Approved_____ Not Approved_____ County Health Department

ALL CHANGES MUST BE APPROVED BY THE COUNTY HEALTH DEPARTMENT

1015, 1988 (Replaces HRS-H Form 4016 which may be used)
ds Number: 5740-000-4015-0)

Lot 19, CSE

NOTICE OF COMMENCEMENT FORM
COLUMBIA COUNTY, FLORIDA

THE UNDERSIGNED hereby gives notice that improvement will be made to certain real property, and in accordance with Chapter 713, Florida Statutes, the following information is provided in this Notice of Commencement.

Tax Parcel ID Number 15-4S-17-08359-119

1. Description of property: (legal description of the property and street address or 911 address)
   215 SE Gregory Glenn
   Lake City, Fl 32025

2. General description of improvement: new home

3. Owner Name & Address Cornerstone Development Group LLC
   180 NW Amenity Ct, Lake City, Fl Interest in Property Fee Simple

4. Name & Address of Fee Simple Owner (If other than owner):

5. Contractor Name Bryan Zechar Construction Phone Number 386-752-8653
   Address P.O. Box 815, Lake City, Fl 32056

6. Surety Holders Name N/A Phone Number
   Address
   Amount of Bond N/A

Inst:2005028704 Date:11/17/2005 Time:13:36
DC,P.DeWitt Cason,Columbia County B:1065 P:1188

7. Lender Name N/A
   Address

8. Persons within the State of Florida designated by the Owner upon whom notices or other documents may be served as provided by section 718.13 (1)(a) 7; Florida Statutes:
   Name N/A Phone Number
   Address

9. In addition to himself/herself the owner designates N/A of
   to receive a copy of the Lienor's Notice as provided in Section 713.13 (1) – (a) 7. Phone Number of the designee N/A

10. Expiration date of the Notice of Commencement (the expiration date is 1 (one) year from the date of recording, (Unless a different date is specified) N/A

NOTICE AS PER CHAPTER 713, Florida Statutes:
The owner must sign the notice of commencement and no one else may be permitted to sign in his/her stead.

Signature of Owner

Sworn to (or affirmed) and subscribed before 17th day of Nov, 2005

NOTARY STAMP/SEAL

SUSAN ANN FAIR
MY COMMISSION # DD 342845
EXPIRES: August 14, 2008
Bonded Thru Notary Public Underwriters

Susan Ann Fair
Signature of Notary

COLUMBIA COUNTY 9-1-1 ADDRESSING

263 NW Lake City Ave. * P. O. Box 2949 * Lake City, FL 32056-2949
PHONE: (386) 752-8787 * FAX (386) 758-1365 * Email: ron_croft@columbiacountyfla.com

32025

Addresses for Country Side Estates Subdivision:

Lot #:	Address Assigned:
1	165 SE Victoria Glen
2	195 SE Victoria Glen
3	223 SE Victoria Glen
4	251 SE Victoria Glen
5	281 SE Victoria Glen
6	311 SE Victoria Glen
7	329 SE Victoria Glen
8	328 SE Victoria Glen
9	306 SE Victoria Glen
10	274 SE Victoria Glen
11	244 SE Victoria Glen
12	214 SE Victoria Glen
13	182 SE Victoria Glen
14	152 SE Victoria Glen
15	122 SE Victoria Glen

Lot #:	Address Assigned:
16	123 SE Gregory Glen
17	153 SE Gregory Glen
18	183 SE Gregory Glen
19	215 SE Gregory Glen
20	245 SE Gregory Glen
21	275 SE Gregory Glen
22	309 SE Gregory Glen
23	329 SE Gregory Glen
24	330 SE Gregory Glen
25	308 SE Gregory Glen
26	276 SE Gregory Glen
27	246 SE Gregory Glen
28	216 SE Gregory Glen
29	184 SE Gregory Glen
30	154 SE Gregory Glen
31	~~3239 SE Country Club Rd~~ 124 SE Gregory Glen

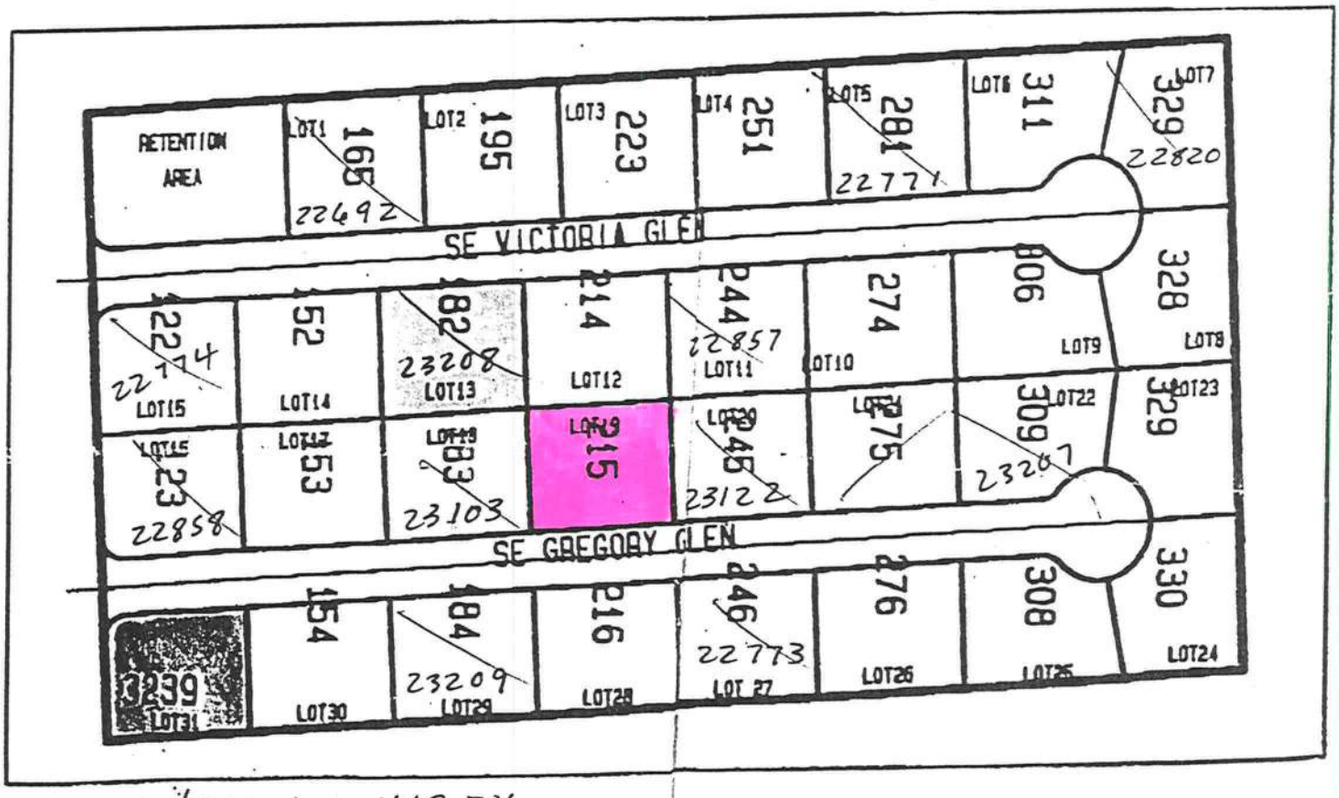

1500/1974 - 469.74
1200/1665 - 391.64

1)

Doc. 1,435.00

THIS INSTRUMENT WAS PREPARED BY:

TERRY McDAVID
POST OFFICE BOX 1328
LAKE CITY, FL 32056-1328

RETURN TO:

TERRY McDAVID
POST OFFICE BOX 1328
LAKE CITY, FL 32056-1328

File No. 04-119

Property Appraiser's
Parcel Identification No.
15-4S-17-08359-016

Inst:2004008036 Date:04/08/2004 Time:12:28
Doc Stamp-Deed : 1435.00
DC,P.DeWitt Cason,Columbia County B:1012 P:49

WARRANTY DEED

THIS INDENTURE, made this 8th day of April 2004, BETWEEN ROLAND L. TARDIF and his wife, LOUISE TARDIF, whose post office address is 4078 SE Country Club Road, Lake City, Florida 32025, of the County of Columbia, State of Florida, grantor*, and CORNERSTONE DEVELOPMENT GROUP, LLC, a Florida Limited Liability Company, whose post office address is 180 NW Amenity Court, Lake City, Florida 32025, of the County of Columbia, State of Florida, grantee*.

WITNESSETH: that said grantor, for and in consideration of the sum of Ten Dollars ($10.00), and other good and valuable considerations to said grantor in hand paid by said grantee, the receipt whereof is hereby acknowledged, has granted, bargained and sold to the said grantee, and grantee's successors and assigns forever, the following described land, situate, lying and being in Columbia County, Florida, to-wit:

PARCEL NO. 1:

TOWNSHIP 4 SOUTH - RANGE 17 EAST

SECTION 15: Begin at the Southeast corner of the Northwest 1/4 of Section 15, Township 4 South, Range 17 East, Columbia County, Florida, and run N 1°11'01"W, along the East line of said Northwest 1/4 a distance of 679.28 feet to the POINT OF BEGINNING; thence S 88°41'16"W, 1296.02 feet to the East right-of-way line of State Road No. S-133; thence N 1°14'10"W, along said West right-of-way line 336.70 feet; thence N 88°41'16"E, 1296.33 feet to said East line of the Northwest 1/4, Section 15; thence S 1°11'01"E, along said East line 336.70 feet to the POINT OF BEGINNING. COLUMBIA COUNTY, FLORIDA.

PARCEL NO. 2:

TOWNSHIP 4 SOUTH - RANGE 17 EAST

SECTION 15: Commence at the Southeast corner of the Northwest 1/4 of Section 15, Township 4 South, Range 17 East, Columbia County, Florida, and run N 01°11'01"W, along the East line of said Northwest 1/4 a distance of 343.13 feet to the POINT OF BEGINNING; thence S 88°41'16"W, 1295.71 feet to a point on the East right-of-way line of State Road No. S-133; thence N 01°14'10"W, along said

Easterly right-of-way line 336.15 feet; thence N 88°41'16"E, 1296.02 feet to a point on the East line of said Northwest 1/4 of Section 15; thence S 01°11'01"E, along said East line 336.15 feet to the POINT OF BEGINNING. COLUMBIA COUNTY, FLORIDA.

SUBJECT TO: Restrictions, easements and outstanding mineral rights of record, if any, and taxes for the current year, & Restrictions shown on Schedule "A" attached hereto.
and said grantor does hereby fully warrant the title to said land, and will defend the same against the lawful claims of all persons whomsoever.

*"Grantor" and "grantee" are used for singular or plural, as context requires.

IN WITNESS WHEREOF, grantor has hereunto set grantor's hand and seal the day and year first above written.

Signed, sealed and delivered
in our presence:

(First Witness)
Terry McDavid
Printed Name

(Second Witness)
Myrtle Ann McElroy
Printed Name

Roland L. Tardif (SEAL)
Roland L. Tardif

Louise Tardif (SEAL)
Louise Tardif

STATE OF FLORIDA
COUNTY OF COLUMBIA

The foregoing instrument was acknowledged before me this 8th day of April 2004, by ROLAND L. TARDIF and his wife, LOUISE TARDIF, who are personally known to me and who did not take an oath.

Notary Public
My Commission Expires:

SCHEDULE "A" ATTACHED TO WARRANTY DEED
DATED APRIL 8, 2004 FROM
ROLAND L. TARDIF & his wife, LOUISE TARDIF
TO
CORNERSTONE DEVELOPMENT GROUP, LLC

For the period of time ending twenty (20) years from this date, the property described herein shall be subject to the following restrictions:

1. No mobile homes may be placed on the property.

2. Any home built on the property shall be a single family residence having not less than 1,100 square feet of heated living area.

Inst:2004008036 Date:04/08/2004 Time:12:28
Doc Stamp-Deed : 1435.00
_____DC,P.DeWitt Cason,Columbia County B:1012 P:51

FORM 600A-2004 EnergyGauge® 4.0

FLORIDA ENERGY EFFICIENCY CODE FOR BUILDING CONSTRUCTION

Florida Department of Community Affairs

Residential Whole Building Performance Method A

Project Name:	**511104TheThomasModel**	Builder:	**Bryan Zęcher**
Address:	**Lot: 19, Sub: Country Side, Plat:**	Permitting Office:	Columbia
City, State:	**, FL**	Permit Number:	23903
Owner:	**Model Home**	Jurisdiction Number:	221000
Climate Zone:	**North**		

1. New construction or existing	New	
2. Single family or multi-family	Single family	
3. Number of units, if multi-family	1	
4. Number of Bedrooms	3	
5. Is this a worst case?	Yes	
6. Conditioned floor area (ft²)	1200 ft²	
7. Glass type[1] and area: (Label reqd. by 13-104.4.5 if not default)		
a. U-factor: (or Single or Double DEFAULT) 7a.	Description Area (Dble Default) 71.0 ft²	
b. SHGC: (or Clear or Tint DEFAULT) 7b.	(Clear) 71.0 ft²	
8. Floor types		
a. Slab-On-Grade Edge Insulation	R=0.0, 160.0(p) ft	
b. N/A		
c. N/A		
9. Wall types		
a. Frame, Wood, Adjacent	R=13.0, 142.0 ft²	
b. Frame, Wood, Exterior	R=13.0, 939.0 ft²	
c. N/A		
d. N/A		
e. N/A		
10. Ceiling types		
a. Under Attic	R=30.0, 1250.0 ft²	
b. N/A		
c. N/A		
11. Ducts		
a. Sup: Unc. Ret: Unc. AH: Garage	Sup. R=6.0, 140.0 ft	
b. N/A		
12. Cooling systems		
a. Central Unit	Cap: 25.0 kBtu/hr	
	SEER: 11.00	
b. N/A		
c. N/A		
13. Heating systems		
a. Electric Heat Pump	Cap: 25.0 kBtu/hr	
	HSPF: 7.00	
b. N/A		
c. N/A		
14. Hot water systems		
a. Electric Resistance	Cap: 40.0 gallons	
	EF: 0.97	
b. N/A		
c. Conservation credits (HR-Heat recovery, Solar DHP-Dedicated heat pump)		
15. HVAC credits (CF-Ceiling fan, CV-Cross ventilation, HF-Whole house fan, PT-Programmable Thermostat, MZ-C-Multizone cooling, MZ-H-Multizone heating)		

Glass/Floor Area: 0.12	Total as-built points: 20286 Total base points: 20843	PASS

I hereby certify that the plans and specifications covered by this calculation are in compliance with the Florida Energy Code.

PREPARED BY: Ben [signature]

DATE: 11-16-05

I hereby certify that this building, as designed, is in compliance with the Florida Energy Code.

OWNER/AGENT: [signature]

DATE: 11-17-05

Review of the plans and specifications covered by this calculation indicates compliance with the Florida Energy Code. Before construction is completed this building will be inspected for compliance with Section 553.908 Florida Statutes.

GREAT SEAL OF THE STATE OF FLORIDA · IN GOD WE TRUST

BUILDING OFFICIAL: _____

DATE: _____

1 Predominant glass type. For actual glass type and areas, see Summer & Winter Glass output on pages 2&4.

SUMMER CALCULATIONS

Residential Whole Building Performance Method A - Details

ADDRESS: **Lot: 19, Sub: Country Side, Plat: , , FL,** PERMIT #:

BASE				AS-BUILT							
GLASS TYPES .18 X Conditioned Floor Area	X BSPM	= Points		Type/SC	Overhang Ornt	Len	Hgt	Area X	SPM X	SOF	= Points
.18	**1200.0**	**20.04**	**4328.6**	Double, Clear	W	1.5	5.5	75.0	38.52	0.90	2591.4
				Double, Clear	W	1.5	7.5	20.0	38.52	0.95	731.3
				Double, Clear	E	0.0	0.0	15.0	42.06	1.00	631.0
				Double, Clear	E	6.5	7.0	7.0	42.06	0.54	157.7
				Double, Clear	N	1.5	3.5	9.0	19.20	0.86	148.4
				Double, Clear	N	1.5	5.5	15.0	19.20	0.93	267.3
				As-Built Total:				**141.0**			**4527.2**

WALL TYPES	Area X	BSPM =	Points	Type	R-Value	Area X	SPM =	Points
Adjacent	142.0	0.70	99.4	Frame, Wood, Adjacent	13.0	142.0	0.60	85.2
Exterior	939.0	1.70	1596.3	Frame, Wood, Exterior	13.0	939.0	1.50	1408.5
Base Total:	**1081.0**		**1695.7**	**As-Built Total:**		**1081.0**		**1493.7**

DOOR TYPES	Area X	BSPM =	Points	Type	Area X	SPM =	Points
Adjacent	18.0	2.40	43.2	Exterior Insulated	20.0	4.10	82.0
Exterior	40.0	6.10	244.0	Exterior Insulated	20.0	4.10	82.0
				Adjacent Insulated	18.0	1.60	28.8
Base Total:	**58.0**		**287.2**	**As-Built Total:**	**58.0**		**192.8**

CEILING TYPES	Area X	BSPM =	Points	Type	R-Value	Area X	SPM X SCM =	Points
Under Attic	1200.0	1.73	2076.0	Under Attic	30.0	1250.0	1.73 X 1.00	2162.5
Base Total:	**1200.0**		**2076.0**	**As-Built Total:**		**1250.0**		**2162.5**

FLOOR TYPES	Area X	BSPM =	Points	Type	R-Value	Area X	SPM =	Points
Slab	160.0(p)	-37.0	-5920.0	Slab-On-Grade Edge Insulation	0.0	160.0(p	-41.20	-6592.0
Raised	0.0	0.00	0.0					
Base Total:			**-5920.0**	**As-Built Total:**		**160.0**		**-6592.0**

INFILTRATION	Area X	BSPM =	Points	Area X	SPM =	Points
	1200.0	10.21	12252.0	1200.0	10.21	12252.0

SUMMER CALCULATIONS

Residential Whole Building Performance Method A - Details

ADDRESS: **Lot: 19, Sub: Country Side, Plat: , , FL,** PERMIT #:

BASE				AS-BUILT							
Summer Base Points: 14719.5				**Summer As-Built Points:**							**14036.2**
Total Summer Points	X	System Multiplier	=	Cooling Points	Total Component (System - Points)	X	Cap Ratio	X	Duct Multiplier (DM x DSM x AHU)	X	System Multiplier	X	Credit Multiplier	=	Cooling Points
					(sys 1: Central Unit 25000 btuh ,SEER/EFF(11.0) Ducts:Unc(S),Unc(R),Gar(AH),R6.0(INS)										
					14036		1.00		(1.09 x 1.147 x 1.00)		0.310		1.000		5444.8
14719.5		**0.4266**		**6279.4**	**14036.2**		**1.00**		**1.250**		**0.310**		**1.000**		**5444.8**

WINTER CALCULATIONS

Residential Whole Building Performance Method A - Details

ADDRESS: **Lot: 19, Sub: Country Side, Plat: , , FL,** PERMIT #:

BASE

GLASS TYPES .18 X Conditioned Floor Area	X BWPM	= Points
.18 1200.0	12.74	2751.8

WALL TYPES	Area	X BWPM	= Points
Adjacent	142.0	3.60	511.2
Exterior	939.0	3.70	3474.3
Base Total:	**1081.0**		**3985.5**

DOOR TYPES	Area	X BWPM	= Points
Adjacent	18.0	11.50	207.0
Exterior	40.0	12.30	492.0
Base Total:	**58.0**		**699.0**

CEILING TYPES	Area	X BWPM	= Points
Under Attic	1200.0	2.05	2460.0
Base Total:	**1200.0**		**2460.0**

FLOOR TYPES	Area	X BWPM	= Points
Slab	160.0(p)	8.9	1424.0
Raised	0.0	0.00	0.0
Base Total:			**1424.0**

INFILTRATION	Area	X BWPM	= Points
	1200.0	-0.59	-708.0

AS-BUILT

Type/SC	Overhang Ornt	Len	Hgt	Area	X WPM	X WOF	= Points
Double, Clear	W	1.5	5.5	75.0	20.73	1.03	1598.3
Double, Clear	W	1.5	7.5	20.0	20.73	1.01	420.2
Double, Clear	E	0.0	0.0	15.0	18.79	1.00	281.9
Double, Clear	E	6.5	7.0	7.0	18.79	1.27	166.6
Double, Clear	N	1.5	3.5	9.0	24.58	1.01	222.8
Double, Clear	N	1.5	5.5	15.0	24.58	1.00	369.8
As-Built Total:				**141.0**			**3059.5**

Type	R-Value	Area	X WPM	= Points
Frame, Wood, Adjacent	13.0	142.0	3.30	468.6
Frame, Wood, Exterior	13.0	939.0	3.40	3192.6
As-Built Total:		**1081.0**		**3661.2**

Type	Area	X WPM	= Points
Exterior Insulated	20.0	8.40	168.0
Exterior Insulated	20.0	8.40	168.0
Adjacent Insulated	18.0	8.00	144.0
As-Built Total:	**58.0**		**480.0**

Type	R-Value	Area	X WPM X WCM	= Points
Under Attic	30.0	1250.0	2.05 X 1.00	2562.5
As-Built Total:		**1250.0**		**2562.5**

Type	R-Value	Area	X WPM	= Points
Slab-On-Grade Edge Insulation	0.0	160.0(p	18.80	3008.0
As-Built Total:		**160.0**		**3008.0**

Area	X WPM	= Points
1200.0	-0.59	-708.0

WINTER CALCULATIONS

Residential Whole Building Performance Method A - Details

ADDRESS: **Lot: 19, Sub: Country Side, Plat: , , FL,** PERMIT #:

BASE				AS-BUILT							
Winter Base Points:			**10612.3**	**Winter As-Built Points:**							**12063.2**
Total Winter Points	X	System Multiplier	= Heating Points	Total Component (System - Points)	X	Cap Ratio	X Duct Multiplier (DM x DSM x AHU)	X System Multiplier	X Credit Multiplier	=	Heating Points
				(sys 1: Electric Heat Pump 25000 btuh ,EFF(7.0) Ducts:Unc(S),Unc(R),Gar(AH),R6.0							
				12063.2		1.000	(1.069 x 1.169 x 1.00)	0.487	1.000		7343.7
10612.3		**0.6274**	**6658.2**	**12063.2**		**1.00**	**1.250**	**0.487**	**1.000**		**7343.7**

WATER HEATING & CODE COMPLIANCE STATUS

Residential Whole Building Performance Method A - Details

ADDRESS: **Lot: 19, Sub: Country Side, Plat: , , FL,** PERMIT #:

BASE					AS-BUILT							
WATER HEATING												
Number of Bedrooms	X	Multiplier	=	Total	Tank Volume	EF	Number of Bedrooms	X	Tank Ratio	X Multiplier	X Credit Multiplier	= Total
3		2635.00		7905.0	40.0	0.97	3		1.00	2499.18	1.00	7497.5
					As-Built Total:							**7497.5**

CODE COMPLIANCE STATUS

BASE				AS-BUILT			
Cooling Points +	Heating Points +	Hot Water Points =	Total Points	Cooling Points +	Heating Points +	Hot Water Points =	Total Points
6279	**6658**	**7905**	**20843**	**5445**	**7344**	**7498**	**20286**

PASS

Code Compliance Checklist

Residential Whole Building Performance Method A - Details

ADDRESS: **Lot: 19, Sub: Country Side, Plat: , , FL,** PERMIT #:

6A-21 INFILTRATION REDUCTION COMPLIANCE CHECKLIST

COMPONENTS	SECTION	REQUIREMENTS FOR EACH PRACTICE	CHECK
Exterior Windows & Doors	606.1.ABC.1.1	Maximum:.3 cfm/sq.ft. window area; .5 cfm/sq.ft. door area.	
Exterior & Adjacent Walls	606.1.ABC.1.2.1	Caulk, gasket, weatherstrip or seal between: windows/doors & frames, surrounding wall; foundation & wall sole or sill plate; joints between exterior wall panels at corners; utility penetrations; between wall panels & top/bottom plates; between walls and floor. EXCEPTION: Frame walls where a continuous infiltration barrier is installed that extends from, and is sealed to, the foundation to the top plate.	
Floors	606.1.ABC.1.2.2	Penetrations/openings >1/8" sealed unless backed by truss or joint members. EXCEPTION: Frame floors where a continuous infiltration barrier is installed that is sealed to the perimeter, penetrations and seams.	
Ceilings	606.1.ABC.1.2.3	Between walls & ceilings; penetrations of ceiling plane of top floor; around shafts, chases, soffits, chimneys, cabinets sealed to continuous air barrier; gaps in gyp board & top plate; attic access. EXCEPTION: Frame ceilings where a continuous infiltration barrier is installed that is sealed at the perimeter, at penetrations and seams.	
Recessed Lighting Fixtures	606.1.ABC.1.2.4	Type IC rated with no penetrations, sealed; or Type IC or non-IC rated, installed inside a sealed box with 1/2" clearance & 3" from insulation; or Type IC rated with < 2.0 cfm from conditioned space, tested.	
Multi-story Houses	606.1.ABC.1.2.5	Air barrier on perimeter of floor cavity between floors.	
Additional Infiltration reqts	606.1.ABC.1.3	Exhaust fans vented to outdoors, dampers; combustion space heaters comply with NFPA, have combustion air.	

6A-22 OTHER PRESCRIPTIVE MEASURES (must be met or exceeded by all residences.)

COMPONENTS	SECTION	REQUIREMENTS	CHECK
Water Heaters	612.1	Comply with efficiency requirements in Table 612.1.ABC.3.2. Switch or clearly marked circuit breaker (electric) or cutoff (gas) must be provided. External or built-in heat trap required.	
Swimming Pools & Spas	612.1	Spas & heated pools must have covers (except solar heated). Non-commercial pools must have a pump timer. Gas spa & pool heaters must have a minimum thermal efficiency of 78%.	
Shower heads	612.1	Water flow must be restricted to no more than 2.5 gallons per minute at 80 PSIG.	
Air Distribution Systems	610.1	All ducts, fittings, mechanical equipment and plenum chambers shall be mechanically attached, sealed, insulated, and installed in accordance with the criteria of Section 610. Ducts in unconditioned attics: R-6 min. insulation.	
HVAC Controls	607.1	Separate readily accessible manual or automatic thermostat for each system.	
Insulation	604.1, 602.1	Ceilings-Min. R-19. Common walls-Frame R-11 or CBS R-3 both sides. Common ceiling & floors R-11.	

ENERGY PERFORMANCE LEVEL (EPL) DISPLAY CARD

ESTIMATED ENERGY PERFORMANCE SCORE* = 83.0

The higher the score, the more efficient the home.

Model Home, Lot: 19, Sub: Country Side, Plat: , , FL,

1. New construction or existing		New	
2. Single family or multi-family		Single family	
3. Number of units, if multi-family		1	
4. Number of Bedrooms		3	
5. Is this a worst case?		Yes	
6. Conditioned floor area (ft²)		1200 ft²	
7. Glass type[1] and area: (Label reqd. by 13-104.4.5 if not default)			
a. U-factor:	Description	Area	
(or Single or Double DEFAULT) 7a.	(Dble Default)	71.0 ft²	
b. SHGC:			
(or Clear or Tint DEFAULT) 7b.	(Clear)	71.0 ft²	
8. Floor types			
a. Slab-On-Grade Edge Insulation		R=0.0, 160.0(p) ft	
b. N/A			
c. N/A			
9. Wall types			
a. Frame, Wood, Adjacent		R=13.0, 142.0 ft²	
b. Frame, Wood, Exterior		R=13.0, 939.0 ft²	
c. N/A			
d. N/A			
e. N/A			
10. Ceiling types			
a. Under Attic		R=30.0, 1250.0 ft²	
b. N/A			
c. N/A			
11. Ducts			
a. Sup: Unc. Ret: Unc. AH: Garage		Sup. R=6.0, 140.0 ft	
b. N/A			

12. Cooling systems		
a. Central Unit	Cap: 25.0 kBtu/hr	
	SEER: 11.00	
b. N/A		
c. N/A		
13. Heating systems		
a. Electric Heat Pump	Cap: 25.0 kBtu/hr	
	HSPF: 7.00	
b. N/A		
c. N/A		
14. Hot water systems		
a. Electric Resistance	Cap: 40.0 gallons	
	EF: 0.97	
b. N/A		
c. Conservation credits		
(HR-Heat recovery, Solar		
DHP-Dedicated heat pump)		
15. HVAC credits		
(CF-Ceiling fan, CV-Cross ventilation,		
HF-Whole house fan,		
PT-Programmable Thermostat,		
MZ-C-Multizone cooling,		
MZ-H-Multizone heating)		

I certify that this home has complied with the Florida Energy Efficiency Code For Building Construction through the above energy saving features which will be installed (or exceeded) in this home before final inspection. Otherwise, a new EPL Display Card will be completed based on installed Code compliant features.

Builder Signature: _____ Date: 11-18-05

Address of New Home: 215 SE GREGORY GLN. City/FL Zip: LAKE CITY FL

**NOTE: The home's estimated energy performance score is only available through the FLA/RES computer program. This is not a Building Energy Rating. If your score is 80 or greater (or 86 for a US EPA/DOE EnergyStar™ designation), your home may qualify for energy efficiency mortgage (EEM) incentives if you obtain a Florida Energy Gauge Rating. Contact the Energy Gauge Hotline at 321/638-1492 or see the Energy Gauge web site at www.fsec.ucf.edu for information and a list of certified Raters. For information about Florida's Energy Efficiency Code For Building Construction, contact the Department of Community Affairs at 850/487-1824.*

1 Predominant glass type. For actual glass type and areas, see Summer & Winter Glass output on pages 2&4.

EnergyGauge® (Version: FLRCSB v4.0)

BUILDING INPUT SUMMARY REPORT

PROJECT

Title:	511104TheThomasModel	**Family Type:**	Single	**Address Type:**	Lot Information
Owner:	Model Home	**New/Existing:**	New	**Lot #:**	19
# of Units:	1	**Bedrooms:**	3	**Subdivision:**	Country Side
Builder Name:	Bryan Zecher	**Conditioned Area:**	1200	**Platbook:**	(blank)
Climate:	North	**Total Stories:**	1	**Street:**	N/A
Permit Office:	(blank)	**Worst Case:**	Yes	**County:**	Columbia
Jurisdiction #:	(blank)	**Rotate Angle:**	(blank)	**City, St, Zip:**	, FL,

FLOORS

#	Floor Type	R-Val	Area/Perimeter	Units
1	Slab-On-Grade Edge Insulation	0.0	160.0(p) ft	1

DOORS

#	Door Type	Orientation	Area	Units
1	Insulated	Exterior	10.0 ft²	2
2	Insulated	Exterior	20.0 ft²	1
3	Insulated	Adjacent	18.0 ft²	1

CEILINGS

#	Ceiling Type	R-Val	Area	Base Area	Units
1	Under Attic	30.0	1250.0 ft²	1200.0 ft²	1

Credit Multipliers: None

COOLING

#	System Type	Efficiency	Capacity
1	Central Unit	SEER: 11.00	25.0 kBtu/hr

Credit Multipliers: None

WALLS

#	Wall Type	Location	R-Val	Area	Units
1	Frame - Wood	Adjacent	13.0	142.0 ft²	1
2	Frame - Wood	Exterior	13.0	939.0 ft²	1

HEATING

#	System Type	Efficiency	Capacity
1	Electric Heat Pump	COP: 7.00	25.0 kBtu/hr

Credit Multipliers: None

WINDOWS

#	Panes	Tint	Ornt	Area	OH Length	OH Hght	Units
1	Double	Clear	N	15.0 ft²	1.5 ft	5.5 ft	5
2	Double	Clear	N	10.0 ft²	1.5 ft	7.5 ft	2
3	Double	Clear	S	15.0 ft²	0.0 ft	0.0 ft	1
4	Double	Clear	S	7.0 ft²	6.5 ft	7.0 ft	1
5	Double	Clear	E	9.0 ft²	1.5 ft	3.5 ft	1
6	Double	Clear	E	15.0 ft²	1.5 ft	5.5 ft	1

DUCTS

#	Supply Location	Return Location	Air Handler Location	Supply R-Val	Supply Length
1	Uncond.	Uncond.	Garage	6.0	140.0 ft

Credit Multipliers: None

WATER

#	System Type	EF	Cap.	Conservation Type	Con. EF
1	Electric Resistance	0.97	40.0	None	0.00

REFR.

#	Use Default?	Annual Operating Cost	Electric Rate
1	Yes	N/A	N/A

CERTIFICATE OF

OCCUPANCY

COLUMBIA COUNTY, FLORIDA

Department of Building and Zoning Inspection

This Certificate of Occupancy is issued to the below named permit holder for the building and premises at the below named location, and certifies that the work has been completed in accordance with the Columbia County Building Code.

Parcel Number 15-4S-17-08359-119 **Building permit No.** 000023903

Use Classification SFD,UTILITY **Fire:** 41.44

Permit Holder BRYAN ZECHER **Waste:** 85.75

Owner of Building CORNERSTONE DEVELOPERS **Total:** 127.19

Location: 215 SE GREGORY GLEN(COUNTRY SIDE EST.,LOT 19)

Date: 03/28/2006

Building Inspector

POST IN A CONSPICUOUS PLACE
(Business Places Only)

GARAGE DOORS

REVISIONS			
LETTER	DESCRIPTION	DATE	APPROVAL
A	REV PER EN 10130	3/06/98	DL
B	REV PER EN 10141	3/13/98	DL
C	REV PER EN 10152	[illegible]	DL

RUCTED WITH 5 OR MORE SECTIONS MUST BE
E 3/RUNS FOR THE ADDITIONAL INTERMEDIATE
ON THE THIRD SECTION.
..L SECTIONS LESS THAN 20.812" MUST BE
THE ACTUAL SECTION HEIGHT & 20.812".
1 X 5/8" LONG TYPE AB HEX HEAD METAL SCREW
4 WIND WARNINGS ISSUED.

2.

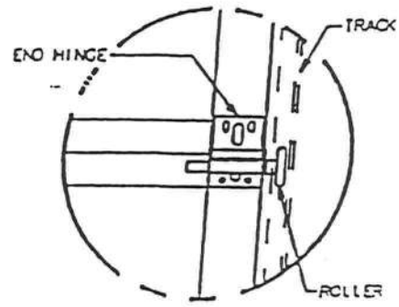

DETAIL "F"

SCALE: 1/4
(16" WIDE)

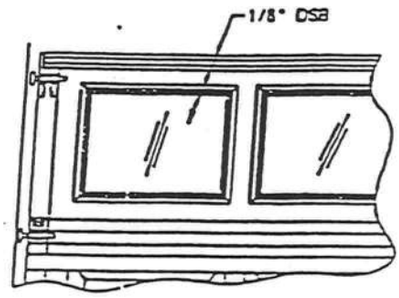

OPTIONAL WINDOW DETAIL

SCALE: 3/32

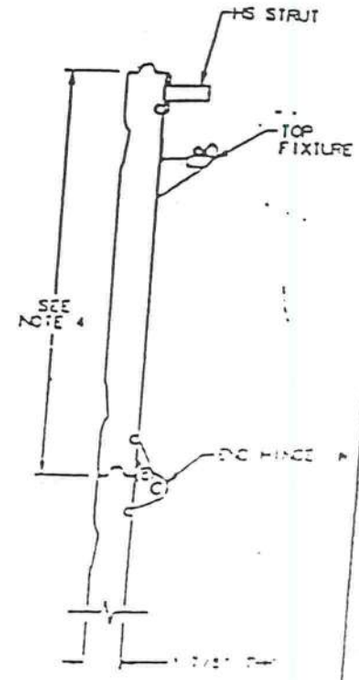

SECTION "A-A"

SCALE: 1/4

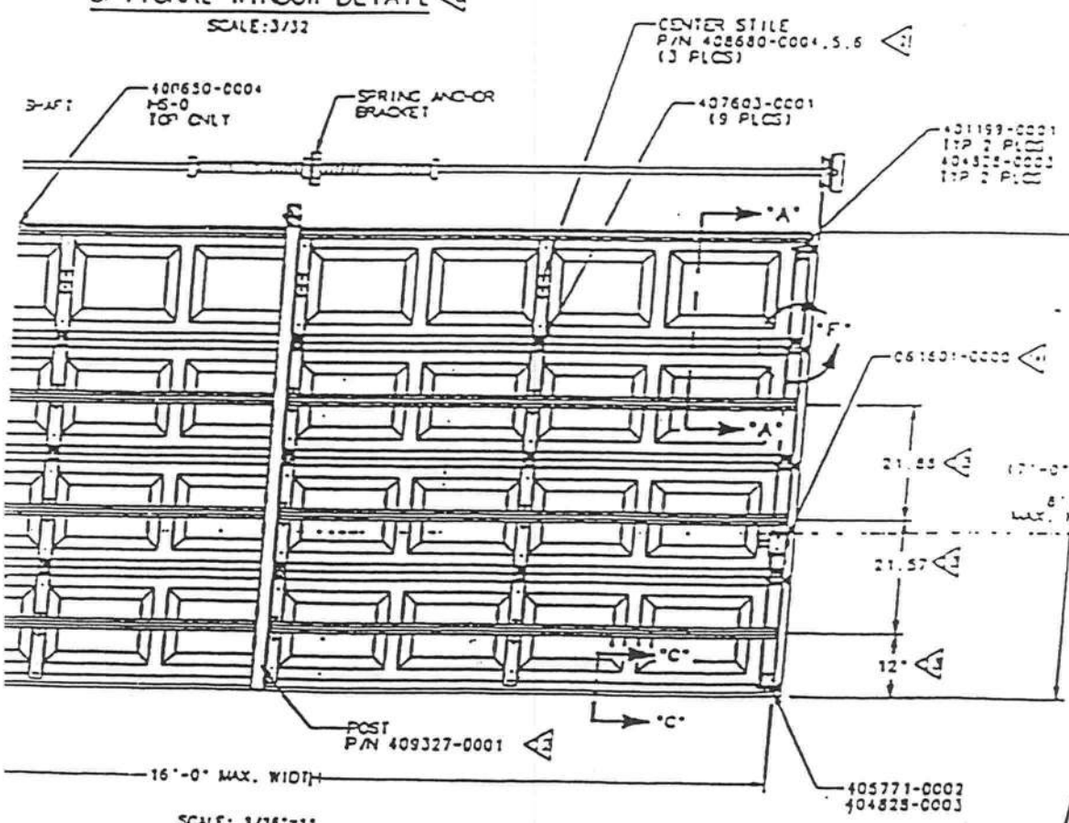

DESIGN LOAD
25 PSF =
TEST LOAD
37.5 PSF =

SCALE: 1/16"=1"

INTERIOR ELEVATION

10/01/01

THE DRAWING AND/OR TECHNICAL INFORMATION ON THIS SHEET IS THE PROPERTY OF SPONCO DOOR CORPORATION OR ITS SUBSIDIARY AND IS LOANED IN CONFIDENCE FOR THE VENDOR AND NORMAL ASSISTANCE PURPOSES ONLY, AND MAY NOT BE REPRODUCED OR USED TO MANUFACTURE ANYTHING DESCRIBED HEREON IN WHOLE OR IN PART WITHOUT THE EXPRESS FOLLOWING OF SPONCO DOOR CORPORATION WHICH MAY RECALL THIS SHEET AT ANY TIME.

UNLESS OTHERWISE SPECIFIED						
DIMENSIONS ARE TO BE PRODUCED REQUIRED ON			SPONCO DOOR Manufacturing	DRAWN BY: M. TOLNIS	01/13/98	DRAWING TITLE: SERIES 250 & 180 RESI STL DR. 16'-0" MAX WIDTH, WINDLOAD
DECIMAL DIMENSIONS	NOT DIMENSIONS	ANGLES ± 0° 30'	MATERIAL: N/A	CHECKED BY: DAVID FAX	02/19/98	DRAWING NUMBER: D-409335
[illegible]	[illegible]	[illegible]	APPLIED FINISH: NONE	UNIT OF MEASURE: EACH	APPROVED BY: DAVID FAX	02/19/98

NOTES:

1. TESTED IN ACCORDANCE WITH STANDARD BUILDING CODE, CHAPTER 17, TO A POSITIVE AND NEGATIVE 37.5 PSF.
2. DASH NUMBERS REPRESENT VARIOUS SECTION HEIGHTS.
3. FOUR SECTION 7' HIGH DOOR SHOWN. 8' HIGH DOORS HAVE FIVE SECTIONS.
4. SECTION HEIGHT OF 20.312, 19.00 & 16.75 ARE AVAILABLE AND MAY BE USED IN COMBINATION TO ACHIEVE VARIOUS HEIGHT DOORS.
5. EMBOSSMENT PATTERN OF 14.50 X 20.375 SHOWN. ALTERNATE PATTERNS OF 12.50 X 43.375 AND 12.50 X 20.375 MAY BE USED.
6. TORSION SPRINGS SHOWN. EXTENSION SPRINGS AVAILABLE.
7. USE THIS BRACKET, REF. P/N 405964-0002, ON 8' HIGH DOORS ONLY.
8. WINDOW MAY BE INSTALLED IN THE TOP SECTION OR THE SECTION IMMEDIATELY BELOW THE TOP SECTION.
9. THE STRUT PLACEMENT ON D
CONSISTENT WITH THE DOOR
SECTIONS ARE TO BE PLACE
10. THE STRUT PLACEMENT DIME
REDUCED BY THE DIFFERENCE
11. SCREW P/N 605911-0001 IS
12. POST TO BE INSTALLED ONLY
13. STRUT PLACEMENTS CAN VARY
14. QUANTITY FOR LOCKS CAN BE

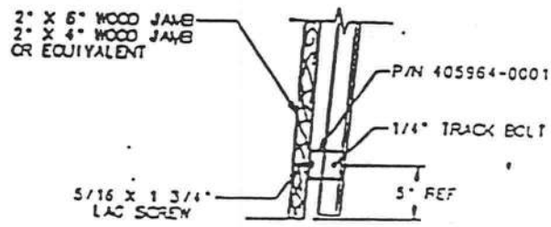

DETAIL "E"

SCALE: 1/3

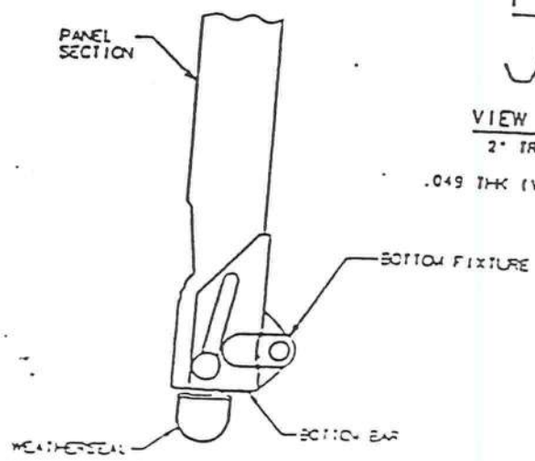

VIEW "D-

2" TRACK

.049 THK (VERT

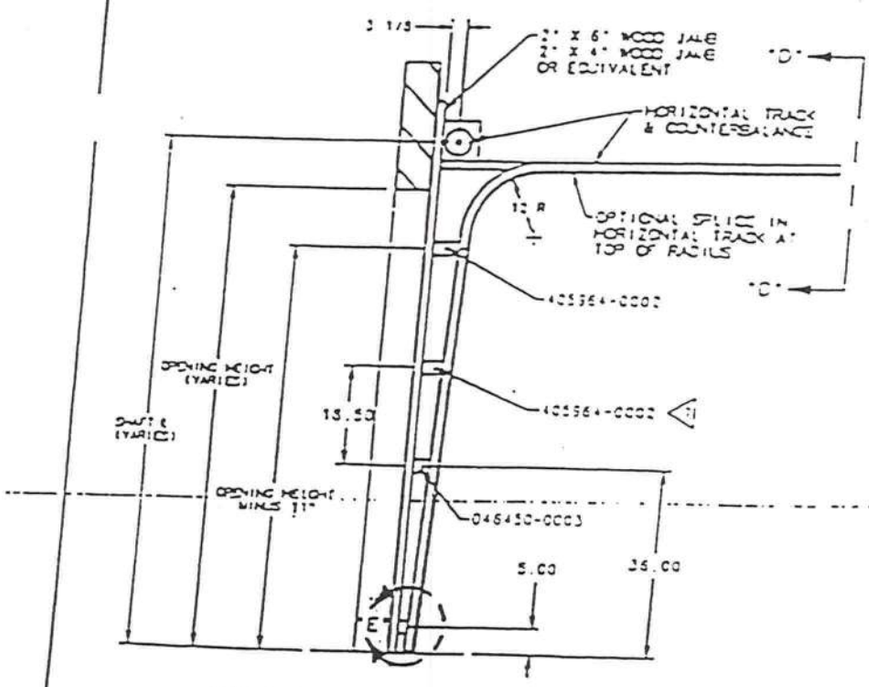

STANDARD TRACK DETAIL FOR 16'

SCALE: 1/16" = 1'

SECTION "C-C"

SCALE: 1/2

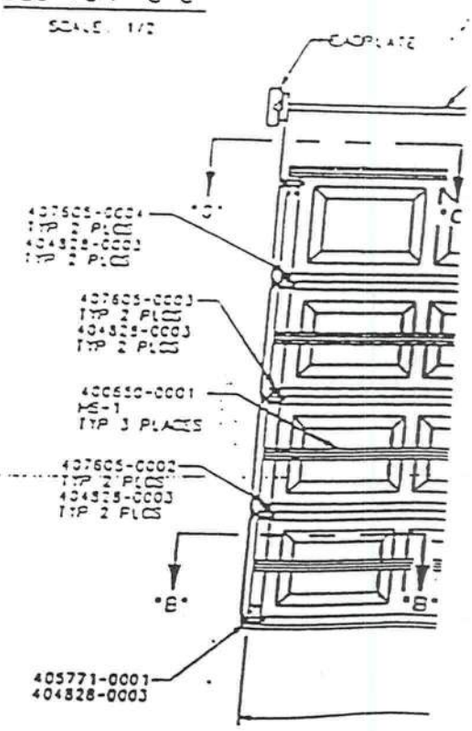

SERIES 280 THRU 289 ARE EQUIVALENT CONSTRUCTION 25GA STEEL
SERIES 180 ARE SAME CONSTRUCTION AS SERIES 280 ONLY 24GA STEEL AND END CAPS

DOOR TESTED WAS 281 SERIES.

DOOR WIDTH	CENTER STILE	END STILE	ROLLER SHAFT BRACKET	STRUTS/SECT.	ROLLER	VERTICAL TRACK GAGE	JAMB LOAD (# PER FT-HT)	HARDWARE
16'	3	SINGLE		HS1 HS0	2" X 7/16"	.049"	100	STD.

SHINGLES

ELK Premium Roofing

March 6, 2002

Subject: Elk Product Approval Information

All Prestique® and Capstone® products manufactured in Tuscaloosa, AL are certified under the Miami – Dade County Building Code Office (BCCO). These products also meet the requirements for the Florida Building Code since they are MD approved. The following test protocols must be passed by each of the products in order for MD product certification:

ASTM D3462
PA 100 (110 mph uplift and wind driven rain resistance)
PA 107 (Modified ASTM D3161 - 110 mph wind uplift resistance)

The nailing patterns that were used during the PA 100 and PA 107 wind test protocols for the Prestique and Capstone products are listed below. Also listed below are the Miami – Dade Notice of Acceptance Numbers (NOA).

Raised Profile, Prestique High Definition, Prestique 25, or Prestique 30 –
PA 100 = 4 nails
PA 107 = 5 nails
MD NOA# = 01-1226.04

Prestique 1 35 or Prestique 1* –
PA 100 = 4 nails
PA 107 = 5 nails
MD NOA# = 01-1226.05

Prestique Plus or Prestique Gallery Collection* –
PA 100 = 4 nails
PA 107 = 4 nails
MD NOA# = 01-1226.03

Capstone*
PA 100 = 4 Nails
PA 107 = 4 Nails
MD NOA# = 01-0523.01

* As per the Elk Limited Warranty, six nails are required for the Elk high wind warranty

If there are any questions please contact:

Mike Reed – Technical Manager or Daniel DeJarnette – QA Engineer
(205) 342-0287 (205) 342-0298

DIRECTIONS FOR APPLICATION

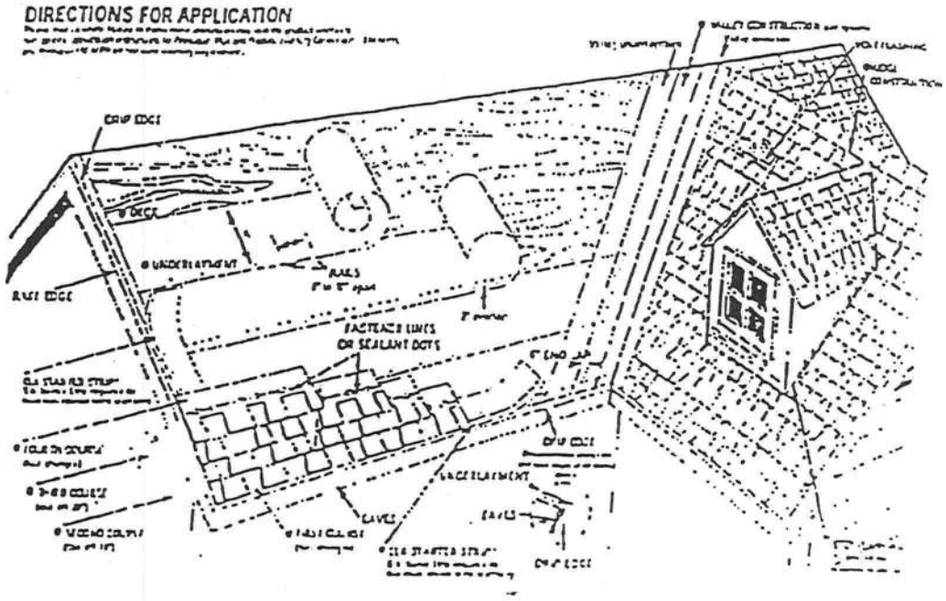

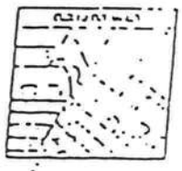

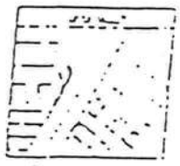

DIRECTIONS FOR APPLICATION

LEAK FLASHING FOR ICE DAMS USE A ROOFING CONTRACTOR. REFER TO ELKA MANUAL OR CONTACT LOCAL CODES

FIRST COURSE

SECOND COURSE

THIRD COURSE

FOURTH COURSE

VALLEY CONSTRUCTION

RIDGE CONSTRUCTION

FASTENING

HAMMER APPLICATIONS

LIMITED WIND WARRANTY

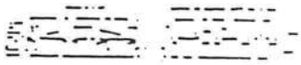

CAUTION TO WHOLESALER

ELK

www.elkcorp.com

ROOFING PRODUCTS SPECIFICATIONS - TUSCALOOSA, AL

PRESTIQUE®
HIGH DEFINITION®

RAISED PROFILE™

[illegible]

[illegible]

TIMP AND RIDGE SHINGLES

[illegible]

[illegible]

SOUTHEAST & ATLANTIC OFFICE:
800.945.5551

CORPORATE HEADQUARTERS:
800.354.7732

PLANT LOCATION:
800.945.5545

ELK
www.elkcorp.com

WINDOWS

AAMA/NWWDA 101/I.S.2-97
TEST REPORT SUMMARY

Rendered to:

MI HOME PRODUCTS, INC.

SERIES/MODEL: 650 Fin
TYPE: Aluminum Single Hung Window

Title of Test	Results
Rating	H-R40 52 x 72
Overall Design Pressure	+45.0 psf -47.2 psf
Operating Force	11 lb max.
Air Infiltration	0.13 cfm/ft²
Water Resistance	6.00 psf
Structural Test Pressure	+67.5 psf -70.8 psf
Deglazing	Passed
Forced Entry Resistance	Grade 10

Reference should be made to Report No. 01-41134.01 dated 03/26/02 for complete test specimen description and data.

For ARCHITECTURAL TESTING, INC.

Mark A. Hess, Technician

MAH:nlb

ALLEN N. REEVES
LICENSE
NO. 18394
STATE OF
FLORIDA
PROFESSIONAL ENGINEER

1 APRIL 2002

Architectural Testing

AAMA/NWWDA 101/I.S.2-97 TEST REPORT

Rendered to

MI HOME PRODUCTS, INC.
650 West Market Street
P.O. Box 370
Gratz, Pennsylvania 17030-0370

Report No: 01-41134.01
Test Date: 03/07/02
Report Date: 03/26/02
Expiration Date: 03/07/06

Project Summary: Architectural Testing, Inc. (ATI) was contracted by MI Home Products, Inc. to perform tests on Series/Model 650 Fin, aluminum single hung window at their facility located in Elizabethville, Pennsylvania. The samples tested successfully met the performance requirements for a H-R40 52 x 72 rating.

Test Specification: The test specimen was evaluated in accordance with AAMA/NWWDA 101/I.S.2-97, *Voluntary Specifications for Aluminum, Vinyl (PVC) and Wood Windows and Glass Doors.*

Test Specimen Description

Series/Model: 650 Fin

Type: Aluminum Single Hung Window

Overall Size: 4' 4-1/4" wide by 6' 0-3/8" high

Active Sash Size: 4' 1-3/4" wide by 3' 0-5/8" high

Daylight Opening Size: 3' 11-3/8" wide by 2' 9-1/2" high

Screen Size: 4' 0-1/4" wide by 2' 11-1/8" high

Finish: All aluminum was white.

Glazing Details: The active and fixed lites utilized 5/8" thick, sealed insulating glass constructed from two sheets of 1/8" thick, clear annealed glass and a metal reinforced butyl spacer system. The active sash was channel glazed utilizing a flexible vinyl wrap around gasket. The fixed lite was interior glazed against double-sided adhesive foam tape and secured with PVC snap-in glazing beads.

130 Derry Court
York, PA 17402-9405
phone: 717.764.7700
fax: 717.764.4129
www.architest.com

Allen T. Reeves
1 APRIL 2002

REEVES
NO. 19354
STATE OF FLORIDA
PROFESSIONAL ENGINEER

Test Specimen Description: (Continued)

Weatherstripping:

Description	Quantity	Location
0.230" high by 0.270" backed polypile with center fin	1 Row	Fixed meeting rail
0.250" high by 0.187" backed polypile with center fin	2 Rows	Active sash stiles
1/2" x 1/2" dust plug	4 Pieces	Active sash, top and bottom of stiles
1/4" foam-filled vinyl bulb seal	1 Row	Active sash, bottom rail

Frame Construction: The frame was constructed of extruded aluminum with coped, butted, and sealed corners fastened with two #8 x 1" screws through the head and sill into each jamb screw boss. End caps were utilized on the ends of the fixed meeting rail and secured with two 1-1/4" screws per cap. Meeting rail was secured to the frame utilizing two 1-1/4" screws.

Sash Construction: The sash was constructed of extruded aluminum with coped, butted, and sealed corners fastened with two #8 x 1-1/2" screws through the rails into each jamb screw boss.

Screen Construction: The screen was constructed from roll-formed aluminum with keyed corners. The fiberglass mesh was secured with a flexible spline.

Hardware:

Description	Quantity	Location
Metal cam lock with keeper		Midspan, active meeting rail with keeper adjacent on fixed meeting rail
Plastic tilt latch	2	Active sash, meeting rail ends
Metal tilt pin	2	Active sash, bottom rail ends
Balance assembly	2	One in each jamb
Screen plunger	2	4" from rail ends on top rail

ALLEN H. REEVES, P.E.
CERTIFICATE NO. 11[illegible]
STATE OF FLORIDA
PROFESSIONAL ENGINEER

Allen H. Reeves
1 APRIL 2002

Test Specimen Description: (Continued)

Drainage: Sloped sill

Reinforcement: No reinforcement was utilized.

Installation: The test specimen was installed into a 2 x 8 #2 Spruce-Pine-Fir wood test buck with #8 x 1-5/8" drywall screws every 8" on center around the nail fin. Polyurethane was used as a sealant under the nail fin and around the exterior perimeter.

Test Results:

The results are tabulated as follows

Paragraph	Title of Test - Test Method	Results	Allowed
2.2.1.6.1	Operating Force	11 lbs	30 lbs max
	Air Infiltration (ASTM E 283-91) @ 1.57 psf (25 mph)	0.13 cfm/ft^2	0.3 cfm/ft^2 max

Note #1: The tested specimen meets the performance levels specified in AAMA/NWWDA 101/I.S. 2-97 for air infiltration.

	Water Resistance (ASTM E 547-00) (with and without screen) WTP = 2.86 psf	No leakage	No leakage
2.1.4.1	Uniform Load Deflection (ASTM E 330-97) (Measurements reported were taken on the meeting rail) (Loads were held for 33 seconds)		
	@ 25.9 psf (positive)	0.42"*	0.26" max.
	@ 34.7 psf (negative)	0.43"*	0.26" max.

**Exceeds L/175 for deflection, but passes all other test requirements.*

2.1.4.2	Uniform Load Structural (ASTM E 330-97) (Measurements reported were taken on the meeting rail) (Loads were held for 10 seconds)		
	@ 38.9 psf (positive)	0.02"	0.18" max.
	@ 52.1 psf (negative)	0.02"	0.18" max.

Allen M. Reeves
1 APRIL 2002

ALLEN M. REEVES
CERTIFICATE NO. 1337
STATE OF FLORIDA
PROFESSIONAL ENGINEER

Test Specimen Description: (Continued)

Paragraph	Title of Test - Test Method	Results	Allowed
2.2.1.6.2	Deglazing Test (ASTM E 987)		
	In operating direction at 70 lbs		
	Meeting rail	0.12"/25%	0.50"/100%
	Bottom rail	0.12"/25%	0.50"/100%
	In remaining direction at 50 lbs		
	Left stile	0.06"/12%	0.50"/100%
	Right stile	0.06"/12%	0.50"/100%
	Forced Entry Resistance (ASTM F 588-97)		
	Type: A Grade: 10		
	Lock Manipulation Test	No entry	No entry
	Tests A1 through A5	No entry	No entry
	Test A7	No entry	No entry
	Lock Manipulation Test	No entry	No entry

Optional Performance

4.3	Water Resistance (ASTM E 547-00) (with and without screen) WTP = 6.00 psf	No leakage	No leakage
	Uniform Load Deflection (ASTM E 330-97) (Measurements reported were taken on the meeting rail) (Loads were held for 33 seconds)		
	@ 45.0 psf (positive)	0.47"*	0.26" max.
	@ 47.2 psf (negative)	0.46"*	0.26" max.

**Exceeds L/175 for deflection, but passes all other test requirements.*

Uniform Load Structural (ASTM E 330-97) (Measurements reported were taken on the meeting rail) (Loads were held for 10 seconds)		
@ 67.5 psf (positive)	0.05"	0.15" max.
@ 70.8 psf (negative)	0.05"	0.15" max.

Allen H. Reeves
1 APRIL 2002

ALLEN H. REEVES
STATE OF FLORIDA
PROFESSIONAL ENGINEER

Detailed drawings, representative samples of the test specimen, and a copy of this report will be retained by ATI for a period of four years. The above results were secured by using the designated test methods and they indicate compliance with the performance requirements of the above referenced specification. This report does not constitute certification of this product, which may only be granted by the certification program administrator.

For ARCHITECTURAL TESTING, INC:

Mark A. Hess
Technician

Allen N. Reeves, P.E.
Director - Engineering Services
1 APRIL 2002

MAH:nlb
01-41134.01

ALLEN N. REEVES
CERTIFICATE
NO. 13934
STATE OF
FLORIDA
PROFESSIONAL ENGINEER

X
Opaque Inswing Unit

COP-WL-JH4101-02

WOOD-EDGE STEEL DOORS

APPROVED ARRANGEMENT:

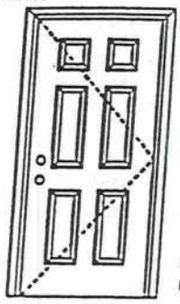

Warnock Hersey

Test Data Review Certificate #3026447A and COP/Test Report Validation Matrix #3026447A-001 provides additional information - available from the ITS/WH website (www.etsemko.com), the Masonite website (www.masonite.com) or the Masonite technical center

Note:
Units of other sizes are covered by this report as long as the panel used does not exceed 3'0" x 6'8".

Single Door
Maximum unit size = 3'0" x 6'8"

Design Pressure
+66.0/-66.0
limited water unless special threshold design is used

Large Missile Impact Resistance
Hurricane protective system (shutters) is NOT REQUIRED.

Actual design pressure and impact resistant requirements for a specific building design are determined by architects or engineers in accordance with applicable state or local building codes which the action requires

MINIMUM ASSEMBLY DETAIL:

Compliance requires that minimum assembly details have been followed - see MAD-WL-MA2001-02

MINIMUM INSTALLATION DETAIL:

Compliance requires that minimum installation details have been followed - see MID-WL-MA2001-02

APPROVED DOOR STYLES:

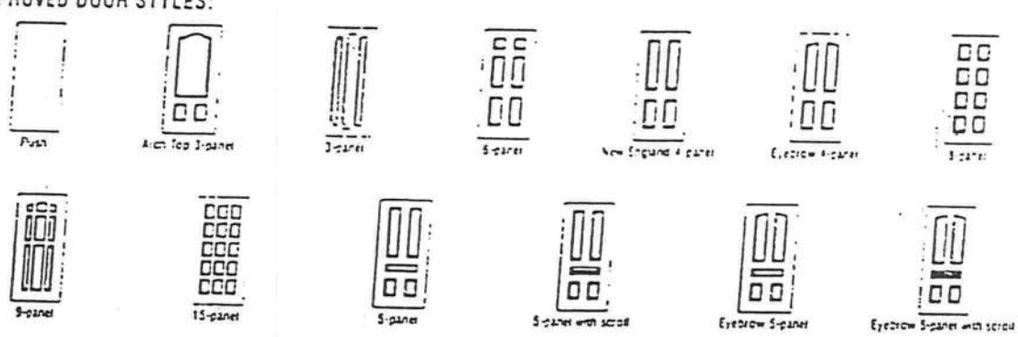

Johnson EntrySystems

June 17, 2002
Our continuing program of product improvement makes specifications, design and details subject to change without notice

PREMDOR Fabulous Premium Quality Doors

Exclusively from Masonite®
Masonite International Corporation

X
Opaque Inswing Unit

COP-WL-JH4101-02

WOOD-EDGE STEEL DOORS

CERTIFIED TEST REPORTS:

NCTL 210-2185-1, 2, 3

Certifying Engineer and License Number: Barry D. Portney, P.E. / 16258.

Unit Tested in Accordance with Miami-Dade BCCO PA201, PA202 and PA203.

Door panels constructed from 26-gauge 0.017" thick steel skins. Both stiles constructed from wood. Top end rails constructed of 0.041" steel. Bottom end rails constructed of 0.021" steel. Interior cavity of slab filled with rigid polyurethane foam core.

Frame constructed of wood with an extruded aluminum threshold.

PRODUCT COMPLIANCE LABELING:

TESTED IN ACCORDANCE WITH
MIAMI-DADE BCCO
PA201, PA202 & PA203

COMPANY NAME
CITY STATE

To the best of my knowledge and ability the above side-hinged exterior door unit conforms to the requirements of the 2001 Florida Building Code, Chapter 17 (Structural Tests and Inspections).

Kurt L Balthazor

State of Florida, Professional Engineer
Kurt Balthazor, P.E. – License Number 56533

Warnock Hersey

Test Data Review Certificate #3026447A and COP/Test Report Validation Matrix #3026447A-001 provides additional information - available from the ITS/WH website (www.itsemaa.com), the Masonite website (www.masonite.com) or the Masonite technical center.

2

Johnson EntrySystems

June 17, 2002

Exclusively from Masonite
Masonite International Corporation

XX
Glazed Inswing Unit

COP-WL-JH4142-02

WOOD-EDGE STEEL DOORS

APPROVED ARRANGEMENT:

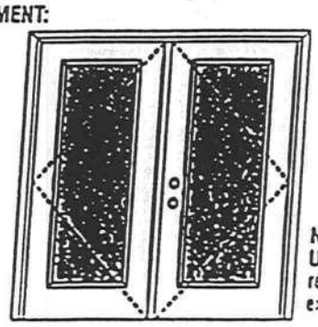

Warnock Hersey

Test Data Review Certificate #30206447A and COP/Test Report Validation Matrix #30206447A-001 provides additional information - available from the ITS/WH website (www.itsWH.com), the Masonite website (www.masonite.com) or the Masonite technical center

Note:
Units of other sizes are covered by this report as long as the panels used do not exceed 3'0" x 6'8".

Double Door
Maximum unit size = 6'0" x 6'8"

Design Pressure
+40.5/-40.5
Unless other areas special Dwelling design is used

Large Missile Impact Resistance
Hurricane protective system (shutters) is REQUIRED

Actual design pressure and impact resistant requirements for a specific building design are determined by the building code in effect in the area of the building doors satisfy the actual requirements

MINIMUM ASSEMBLY DETAIL:

Compliance requires that minimum assembly details have been followed – see MAD-WL-MAC000-00 and MAD-WL-MAC041-02.

MINIMUM INSTALLATION DETAIL:

Compliance requires that minimum installation details have been followed – see MID-WL-MA0000-00

APPROVED DOOR STYLES:

1/4 GLASS:

100 Series | 123, 125 Series | 136 Series | 630 Series | 820 Series*

1/2 GLASS:

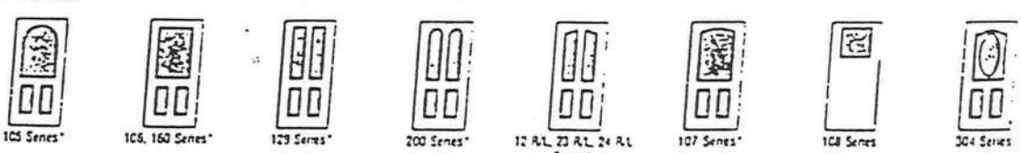

105 Series* | 106, 160 Series* | 129 Series* | 200 Series* | 12 R/L, 23 R/L, 24 R/L Series* | 107 Series* | 108 Series | 304 Series

*This glass lite may also be used in the following door styles: 5-panel, 5-panel with scroll, Eyebrow 5-panel, Eyebrow 5-panel with scroll.

Johnson
EntrySystems

June 17, 2002
Our continuing program of product improvement makes specifications, design and products subject to change without notice

PREMDOOR® Premium Quality Doors

Exclusively from Masonite®
Masonite International Corporation

XX
Glazed Inswing Unit

COP-WL-JH4142-02

WOOD-EDGE STEEL DOORS

APPROVED DOOR STYLES:

3/4 GLASS:

404 Series | 410 Series | 450 Series

FULL GLASS:

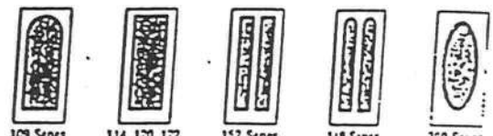

109 Series | 114, 120, 122 Series | 152 Series | 149 Series | 300 Series

CERTIFIED TEST REPORTS:

NCTL 210-1897-7, 8, 9, 10, 11, 12; NCTL 210-1861-4, 5, 6, 10, 11, 12, NCTL 210-2185-1, 2, 3

Certifying Engineer and License Number: Barry D. Portney, P.E. / 16258

Unit Tested in Accordance with Miami-Dade ECCO PA202.

Evaluation report NCTL-210-2794-1

Door panels constructed from 26-gauge 0.017" thick steel skins. Both stiles constructed from wood. Top end rails constructed of 0.041" steel. Bottom end rails constructed of 0.021" steel. Interior cavity of slab filled with rigid polyurethane foam core. Slab glazed with insulated glass mounted in a rigid plastic lip lite surround.

Frame constructed of wood with an extruded aluminum threshold.

PRODUCT COMPLIANCE LABELING:

TESTED IN
ACCORDANCE WITH
MIAMI-DADE ECCO PA202

COMPANY NAME
CITY, STATE

To the best of my knowledge and ability the above side-hinged exterior door unit conforms to the requirements of the 2001 Florida Building Code, Chapter 17 (Structural Tests and Inspections).

Kurt L Balthazor

State of Florida, Professional Engineer
Kurt Balthazor, P.E. – License Number 56533

Warnock Hersey

Test Data Review Certificate #3025447A and COP/Test Report Validation Matrix #3025447A-001 provides additional information - available from the ITS/WH website (www.itsemko.com), the Masonite website (www.masonite.com) or the Masonite technical center.

Johnson EntrySystems

June 17, 2002

PREMDOR

Exclusively from Masonite
Masonite International Corporation

GARAGE HEADER (84)

Anthony POWER HEADER®

26F$_b$ - 1.9E

ENGINEERED WOOD SECTION PROPERTIES AND LOAD CAPACITIES

ALLOWABLE DESIGN STRESSES (PSI):

FLEXURAL STRESS (F_b) =	2600
COMPRESSION PERP. TO GRAIN ($F_{c\perp}$) =	740
HORIZONTAL SHEAR (F_v) =	225
MODULUS OF ELASTICITY (MOE) =	1.9×10^6

[illegible]	7.7	9.0	10.4	11.7	12.9	14.2	15.5
[illegible]	326	514	789	1115	1521	2014	2604
[illegible]	8865	12015	15996	20145	24772	29877	35460
[illegible]	3908	4550	5250	5892	6533	7175	7817

NOTES:

1. Beam weights are based on 38 pcf.
2. Moment capacities are based on a span of 21 feet and must be modified for other spans.
3. Flexural Stress, F_b, shall be modified by the Volume Factor, C_v as outlined in AITC 117 - Design 1993 and the NDS for Wood Construction 1997.
4. Allowable design properties and load capacities are based on a load duration of 100 percent and dry use conditions.
5. The AITC NER 466 was used in calculating the above allowable design stresses for POWER HEADER®.

GARAGE HEADER COMPARISONS

[illegible]	810 / 540	3-1/2" x 8-3/8"	3-1/2" x 9-5/8"	3-1/2" x 9"	3-1/2" x 9-1/4"	3-1/2" x 11-1/4"**
[illegible]	990 / 720	3-1/2" x 9-3/4"	3-1/2" x 9-5/8"	3-1/2" x 10-1/2"	3-1/2" x 9-1/4"	3-1/2" x 11-1/4"**
[illegible]	610 / 400	3-1/2" x 12-5/8"	3-1/2" x 13-3/4"	3-1/2" x 13-1/2"	3-1/2" x 14"	3-1/2" x 14"*
[illegible]	765 / 510	3-1/2" x 14"	3-1/2" x 15-1/8"	3-1/2" x 15"	3-1/2" x 14"	3-1/2" x 16"*
[illegible]	750 / 480	3-1/2" x 15-3/8"	3-1/2" x 16-1/2"	3-1/2" x 16-1/2"	3-1/2" x 16"	3-1/2" x 18"*
[illegible]	900 / 600	3-1/2" x 16-3/4"	3-1/2" x 17-7/8"	3-1/2" x 18"	3-1/2" x 16"	—

For more information on POWER HEADER®, or other laminated structural products from Anthony Forest Products Company please call 1-800-221-2326 or FAX at 870-862-6502.

POWER HEADER® is a trademark of
Anthony Forest Products Company
Post Office Box 1877 • El Dorado, Arkansas 71731
Internet address: http:// www.anthonyforest.com
e-mail: info@anthonyforest.com
© 2001 Anthony Forest Products Company

Distributed by:

WOODFORD PLYWOOD, INC.
"Structural Wood Products"

11960 West Beaver Street
Jacksonville, Florida 32220

(904) 695-9080
(800) 447-6568
FAX (904) 695-9160

Anthony POWER HEADER®

26F$_b$ - 1.9E

3-1/2" WIDTH GARAGE HEADER PLF CAPACITY

844	896		1216		1573								
161	207	254	330	390	510	552	669	752	824				
114	145	180	231	277	359	391	510	534	653	707	789		

844	975		1322										
161	207	254	330	390	510	552	724	752	897				
114	145	180	231	277	359	391	510	534	699	693			

562	778	888	1056	1363	1367		1582						
107	153	169	245	260	380	368	540	501	715	664	864	840	
76	107	120	171	185	267	261	380	356	521	471	684	609	813

NOTES:

1. Values shown are the maximum uniform loads in pounds per lineal foot (PLF) that can be applied to the header. Header weight has been subtracted from the allowable total load.
2. Tables are based on simple span uniform load conditions using a design span equal to the center-to-center of bearing. Non-shaded areas are based on 3" of bearing at each support, shaded areas on 4.5" of bearing, and shaded & outlined areas on 6" of bearing at supports.
3. Headers are assumed to be loaded on the top edge with continuous lateral support along compression edge.
4. When no live load is listed, total load controls.
5. Deflection limits are listed within the PLF table heading.

GARAGE HEADER SIZING USING PLF TABLES:

To size a garage header supporting roof only, determine the total load & live load in pounds per lineal foot (PLF). Check the appropriate PLF table for a header supporting roof loads only (125% Non-Snow vs. 115% Snow) and select a member with a total load and live load capacity which meets or exceeds the design load for the rough opening size. For a garage header supporting roof, wall, and floor framing, determine the total load and live load in pounds per lineal foot (PLF). Select a header size from the roof, wall, and floor table (100% load duration) which has a total load <u>and</u> live load capacity equal to or greater than the design load for the appropriate rough opening.

Residential System Sizing Calculation

Summary

Model Home

, FL

Project Title:
511104TheThomasModel

Class 3 Rating
Registration No. 0
Climate: North

11/16/2005

Location for weather data: Gainesville - Defaults: Latitude(29) Temp Range(M)
Humidity data: Interior RH (50%) Outdoor wet bulb (77F) Humidity difference(51gr.)

Winter design temperature	31	F	Summer design temperature	93	F
Winter setpoint	70	F	Summer setpoint	75	F
Winter temperature difference	39	F	Summer temperature difference	18	F
Total heating load calculation	**21225**	**Btuh**	**Total cooling load calculation**	**20432**	**Btuh**
Submitted heating capacity	% of calc	Btuh	Submitted cooling capacity	% of calc	Btuh
Total (Electric Heat Pump)	117.8	25000	Sensible (SHR = 0.75)	123.7	18750
Heat Pump + Auxiliary(0.0kW)	117.8	25000	Latent	118.6	6250
			Total (Electric Heat Pump)	122.4	25000

WINTER CALCULATIONS

Winter Heating Load (for 1200 sqft)

Load component			Load	
Window total	141	sqft	3990	Btuh
Wall total	1081	sqft	3138	Btuh
Door total	58	sqft	902	Btuh
Ceiling total	1250	sqft	1625	Btuh
Floor total	160	ft	5056	Btuh
Infiltration	128	cfm	5502	Btuh
Subtotal			**20214**	**Btuh**
Duct loss			1011	Btuh
TOTAL HEAT LOSS			**21225**	**Btuh**

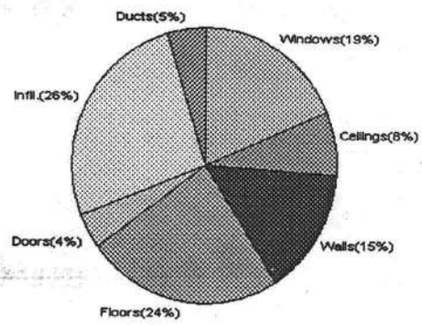

SUMMER CALCULATIONS

Summer Cooling Load (for 1200 sqft)

Load component			Load	
Window total	141	sqft	4415	Btuh
Wall total	1081	sqft	1782	Btuh
Door total	58	sqft	588	Btuh
Ceiling total	1250	sqft	1775	Btuh
Floor total			0	Btuh
Infiltration	112	cfm	2222	Btuh
Internal gain			3000	Btuh
Subtotal(sensible)			**13782**	**Btuh**
Duct gain			1378	Btuh
Total sensible gain			**15160**	**Btuh**
Latent gain(infiltration)			3892	Btuh
Latent gain(internal)			1380	Btuh
Total latent gain			**5272**	**Btuh**
TOTAL HEAT GAIN			**20432**	**Btuh**

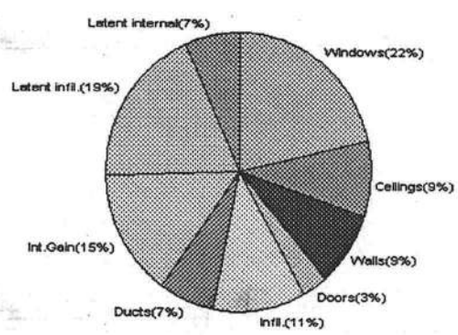

EnergyGauge® System Sizing based on ACCA Manual J.
PREPARED BY: Ben Summe
DATE: 11-15-05

System Sizing Calculations - Winter

Residential Load - Component Details

Model Home

, FL

Project Title:
511104TheThomasModel

Class 3 Rating
Registration No. 0
Climate: North

Reference City: Gainesville (Defaults) Winter Temperature Difference: 39.0 F

11/16/2005

Window	Panes/SHGC/Frame/U	Orientation	Area X	HTM=	Load
1	2, Clear, Metal, DEF	N	75.0	28.3	2122 Btuh
2	2, Clear, Metal, DEF	N	20.0	28.3	566 Btuh
3	2, Clear, Metal, DEF	S	15.0	28.3	424 Btuh
4	2, Clear, Metal, DEF	S	7.0	28.3	198 Btuh
5	2, Clear, Metal, DEF	E	9.0	28.3	255 Btuh
6	2, Clear, Metal, DEF	E	15.0	28.3	424 Btuh
	Window Total		141		3990 Btuh
Walls	Type	R-Value	Area X	HTM=	Load
1	Frame - Adjacent	13.0	142	1.6	227 Btuh
2	Frame - Exterior	13.0	939	3.1	2911 Btuh
	Wall Total		1081		3138 Btuh
Doors	Type		Area X	HTM=	Load
1	Insulated - Exter		20	18.3	367 Btuh
2	Insulated - Exter		20	18.3	367 Btuh
3	Insulated - Adjac		18	9.4	169 Btuh
	Door Total		58		902Btuh
Ceilings	Type	R-Value	Area X	HTM=	Load
1	Under Attic	30.0	1250	1.3	1625 Btuh
	Ceiling Total		1250		1625Btuh
Floors	Type	R-Value	Size X	HTM=	Load
1	Slab-On-Grade Edge Insul	0	160.0 ft(p)	31.6	5056 Btuh
	Floor Total		160		5056 Btuh
Infiltration	Type	ACH X	Building Volume	CFM=	Load
	Natural	0.80	9600(sqft)	128	5502 Btuh
	Mechanical			0	0 Btuh
	Infiltration Total			128	5502 Btuh

Totals for Heating	**Subtotal**	**20214 Btuh**
	Duct Loss(using duct multiplier of 0.05)	**1011 Btuh**
	Total Btuh Loss	**21225 Btuh**

Key: Window types (SHGC - Shading coefficient of glass as SHGC numerical value or as clear or tint)
(Frame types - metal, wood or insulated metal)
(U - Window U-Factor or 'DEF' for default)
(HTM - ManualJ Heat Transfer Multiplier)

Key: Floor size (perimeter(p) for slab-on-grade or area for all other floor types)

System Sizing Calculations - Summer

Residential Load - Component Details

Model Home

, FL

Project Title:
511104TheThomasModel

Class 3 Rating
Registration No. 0
Climate: North

Reference City: Gainesville (Defaults) Summer Temperature Difference: 18.0 F 11/16/2005

Window	Type Panes/SHGC/U/InSh/ExSh	Ornt	Overhang Len	Overhang Hgt	Window Area(sqft) Gross	Shaded	Unshaded	HTM Shaded	HTM Unshaded	Load
1	2, Clear, DEF, N, N	N	1.5	5.5	75.0	0.0	75.0	22	22	1650 Btuh
2	2, Clear, DEF, N, N	N	1.5	7.5	20.0	0.0	20.0	22	22	440 Btuh
3	2, Clear, DEF, N, N	S	0	0	15.0	0.0	15.0	22	37	555 Btuh
4	2, Clear, DEF, N, N	S	6.5	7	7.0	7.0	0.0	22	37	154 Btuh
5	2, Clear, DEF, N, N	E	1.5	3.5	9.0	2.2	6.8	22	72	536 Btuh
6	2, Clear, DEF, N, N	E	1.5	5.5	15.0	0.0	15.0	22	72	1080 Btuh
	Window Total				141					4415 Btuh

Walls	Type	R-Value	Area	HTM	Load
1	Frame - Adjacent	13.0	142.0	1.0	148 Btuh
2	Frame - Exterior	13.0	939.0	1.7	1634 Btuh
	Wall Total		1081.0		1782 Btuh

Doors	Type	Area	HTM	Load
1	Insulated - Exter	20.0	10.1	203 Btuh
2	Insulated - Exter	20.0	10.1	203 Btuh
3	Insulated - Adjac	18.0	10.1	183 Btuh
	Door Total	58.0		588 Btuh

Ceilings	Type/Color	R-Value	Area	HTM	Load
1	Under Attic/Dark	30.0	1250.0	1.4	1775 Btuh
	Ceiling Total		1250.0		1775 Btuh

Floors	Type	R-Value	Size	HTM	Load
1	Slab-On-Grade Edge Insulation	0.0	160.0 ft(p)	0.0	0 Btuh
	Floor Total		160.0		0 Btuh

Infiltration	Type	ACH	Volume	CFM=	Load
	Natural	0.70	9600	112.2	2222 Btuh
	Mechanical			0	0 Btuh
	Infiltration Total			112	2222 Btuh

Internal gain	Occupants		Btuh/occupant		Appliance	Load
	6	X	300	+	1200	3000 Btuh

Totals for Cooling	**Subtotal**	**13782 Btuh**
	Duct gain(using duct multiplier of 0.10)	**1378 Btuh**
	Total sensible gain	**15160 Btuh**
	Latent infiltration gain (for 51 gr. humidity difference)	**3892 Btuh**
	Latent occupant gain (6 people @ 230 Btuh per person)	**1380 Btuh**
	Latent other gain	**0 Btuh**
	TOTAL GAIN	**20432 Btuh**

Manual J Summer Calculations

Residential Load - Component Details (continued)

Model Home

, FL

Project Title:
511104TheThomasModel

Class 3 Rating
Registration No. 0
Climate: North

11/16/2005

Key: Window types (SHGC - Shading coefficient of glass as SHGC numerical value or as clear or tint)
(U - Window U-Factor or 'DEF' for default)
(InSh - Interior shading device: none(N), Blinds/Daperies(B) or Roller Shades(R))
(ExSh - Exterior shading device: none(N) or numerical value)
(Ornt - compass orientation)

RESIDENTIAL MINIMUM PLAN REQUIREMENTS AND CHECKLIST FOR FLORIDA BUILDING CODE 2004 and FLORIDA RESIDENTIAL CODE 2004 WITH AMENDMENTS ONE (1) AND TWO (2) FAMILY DWELLINGS

ALL REQUIREMENTS ARE SUBJECT TO CHANGE
EFFECTIVE OCTOBER 1, 2005

ALL BUILDING PLANS MUST INDICATE THE FOLLOWING ITEMS AND INDICATE COMPLIANCE WITH CHAPTER 16 OF THE FLORIDA BUILDING CODE 2004 BY PROVIDING CALCULATIONS AND DETAILS THAT HAVE THE SEAL AND SIGNATURE OF A CERTIFIED ARCHITECT OR ENGINEER REGISTERED IN THE STATE OF FLORIDA, OR ALTERNATE METHODOLOGIES, APPROVED BY THE STATE OF FLORIDA BUILDING COMMISSION FOR ONE-AND-TWO FAMILY DWELLINGS. FOR DESIGN PURPOSES THE FOLLOWING BASIC WIND SPEED AS PER FIGURE 1609 SHALL BE USED.

WIND SPEED LINE SHALL BE DEFINED AS FOLLOWS: THE CENTERLINE OF INTERSTATE 75.

1. ALL BUILDINGS CONSTRUCTED EAST OF SAID LINE SHALL BE -------- 100 MPH
2. ALL BUILDINGS CONSTRUCTED WEST OF SAID LINE SHALL BE --------110 MPH
3. NO AREA IN COLUMBIA COUNTY IS IN A WIND BORNE DEBRIS REGION

APPLICANT – PLEASE CHECK ALL APPLICABLE BOXES BEFORE SUBMITTAL

GENERAL REQUIREMENTS; Two (2) complete sets of plans containing the following:

Applicant	Plans Examiner	
☑	☑	All drawings must be clear, concise and drawn to scale ("Optional " details that are not used shall be marked void or crossed off). Square footage of different areas shall be shown on plans.
☑	☑	Designers name and signature on document (FBC 106.1). If licensed architect or engineer, official seal shall be affixed.
☑	☑	**Site Plan including:** a) Dimensions of lot b) Dimensions of building set backs c) Location of all other buildings on lot, well and septic tank if applicable, and all utility easements. d) Provide a full legal description of property.
☑	☑	**Wind-load Engineering Summary, calculations and any details required** Plans or specifications must state compliance with FBC Section 1609. The following information must be shown as per section 1603.1.4 FBC a. Basic wind speed (3-second gust), miles per hour (km/hr). b. Wind importance factor, Iw, and building classification from Table 1604.5 or Table 6-1, ASCE 7 and building classification in Table 1-1, ASCE 7. c. Wind exposure, if more than one wind exposure is utilized, the wind exposure and applicable wind direction shall be indicated. d. The applicable enclosure classifications and, if designed with ASCE 7, internal pressure coefficient. e. Components and Cladding. The design wind pressures in terms of psf (kN/m²) to be used for the design of exterior component and cladding materials not specifally designed by the registered design professional.
☑	☑	**Elevations including:** a) All sides
☑	☑	b) Roof pitch
☑	☑	c) Overhang dimensions and detail with attic ventilation

d) Location, size and height above roof of chimneys.
e) Location and size of skylights
f) Building height
e) Number of stories

Floor Plan including:

a) Rooms labeled and dimensioned.
b) Shear walls identified.
c) Show product approval specification as required by Fla. Statute 553.842 and Fla. Administrative Code 9B-72 **(see attach forms).**
d) Show safety glazing of glass, where required by code.
e) Identify egress windows in bedrooms, and size.
f) Fireplace (gas vented), (gas non-vented) or wood burning with hearth, **(Please circle applicable type).**
g) Stairs with dimensions (width, tread and riser) and details of guardrails and handrails.
h) Must show and identify accessibility requirements (accessible bathroom)

See NOTE 1

Foundation Plan including:

a) Location of all load-bearing wall with required footings indicated as standard or monolithic and dimensions and reinforcing.
b) All posts and/or column footing including size and reinforcing
c) Any special support required by soil analysis such as piling
d) Location of any vertical steel.

Roof System:

a) Truss package including:
   1. Truss layout and truss details signed and sealed by Fl. Pro. Eng.
   2. Roof assembly (FBC 106.1.1.2)Roofing system, materials, manufacturer, fastening requirements and product evaluation with wind resistance rating)

b) Conventional Framing Layout including:
   1. Rafter size, species and spacing
   2. Attachment to wall and uplift
   3. Ridge beam sized and valley framing and support details
   4. Roof assembly (FBC 106.1.1.2)Roofing systems, materials, manufacturer, fastening requirements and product evaluation with wind resistance rating)

NA

Wall Sections including:

a) Masonry wall
   1. All materials making up wall
   2. Block size and mortar type with size and spacing of reinforcement
   3. Lintel, tie-beam sizes and reinforcement
   4. Gable ends with rake beams showing reinforcement or gable truss and wall bracing details
   5. All required connectors with uplift rating and required number and size of fasteners for continuous tie from roof to foundation
   6. Roof assembly shown here or on roof system detail (FBC 106.1.1.2) Roofing system, materials, manufacturer, fastening requirements and product evaluation with resistance rating)
   7. Fire resistant construction (if required)
   8. Fireproofing requirements
   9. Shoe type of termite treatment (termiticide or alternative method)
   10. Slab on grade
      a. Vapor retarder (6mil. Polyethylene with joints lapped 6 inches and sealed)
      b. Must show control joints, synthetic fiber reinforcement or Welded fire fabric reinforcement and supports
   11. Indicate where pressure treated wood will be placed
   12. Provide insulation R value for the following:
      a. Attic space
      b. Exterior wall cavity

NA

c. Crawl space (if applicable)

☑ ☐ b) Wood frame wall

1. All materials making up wall
2. Size and species of studs
3. Sheathing size, type and nailing schedule
4. Headers sized
5. Gable end showing balloon framing detail or gable truss and wall hinge bracing detail
6. All required fasteners for continuous tie from roof to foundation (truss anchors, straps, anchor bolts and washers)
7. Roof assembly shown here or on roof system detail (FBC 106.1.1.2) Roofing system, materials, manufacturer, fastening requirements and product evaluation with wind resistance rating)
8. Fire resistant construction (if applicable)
9. Fireproofing requirements
10. Show type of termite treatment (termiticide or alternative method)
11. Slab on grade
    a. Vapor retarder (6Mil. Polyethylene with joints lapped 6 inches and sealed
    b. Must show control joints, synthetic fiber reinforcement or welded wire fabric reinforcement and supports
12. Indicate where pressure treated wood will be placed
13. Provide insulation R value for the following:
    a. Attic space
    b. Exterior wall cavity
    c. Crawl space (if applicable)

☐ NA ☐ ~~c) Metal frame wall and roof (designed, signed and sealed by Florida Prof. Engineer or Architect)~~

~~Floor Framing System:~~

☐ ☐ ~~a) Floor truss package including layout and details, signed and sealed by Florida Registered Professional Engineer~~

☐ ☐ ~~b) Floor joist size and spacing~~

☐ NA ☐ ~~c) Girder size and spacing~~

☐ ☐ ~~d) Attachment of joist to girder~~

☐ ☐ ~~e) Wind load requirements where applicable~~

☐ ☐ **Plumbing Fixture layout**

Electrical layout including:

☑ ☐ a) Switches, outlets/receptacles, lighting and all required GFCI outlets identified

☑ ☐ b) Ceiling fans

☑ ☐ c) Smoke detectors

☑ ☐ d) Service panel and sub-panel size and location(s)

☑ ☐ e) Meter location with type of service entrance (overhead or underground)

☑ ☐ f) Appliances and HVAC equipment

☑ ☐ g) Arc Fault Circuits (AFCI) in bedrooms

☑ ☐ h) Exhaust fans in bathroom

HVAC information

☑ ☐ a) Energy Calculations (dimensions shall match plans)

☑ ☐ b) Manual J sizing equipment or equivalent computation

☑ ☐ c)Gas System Type (LP or Natural) Location and BTU demand of equipment

☑ ☐ **Disclosure Statement for Owner Builders**

☑ ☐ ***Notice Of Commencement Required Before Any Inspections Will Be Done**

☑ ☐ **Private Potable Water**

a) Size of pump motor

b) Size of pressure tank

c) Cycle stop valve if used

PRODUCT APPROVAL SPECIFICATION SHEET

Location: LAKE CITY COUNTRYSIDE **Project Name:** LOT 19

As required by Florida Statute 553.842 and Florida Administrative Code 9B-72, please provide the information and the product approval number(s) on the building components listed below if they will be utilized on the construction project for which you are **applying for a building permit on or after April 1, 2004**. We recommend you contact your local product supplier should you not know the product approval number for any of the applicable listed products. More information about statewide product approval can be obtained at www.floridabuilding.org

Category/Subcategory	Manufacturer	Product Description	Approval Number(s)
A. EXTERIOR DOORS			
1. Swinging			
2. Sliding			
3. Sectional			
4. Roll up			
5. Automatic			
6. Other			
B. WINDOWS			
1. Single hung			
2. Horizontal Slider			
3. Casement			
4. Double Hung			
5. Fixed			
6. Awning			
7. Pass -through			
8. Projected			
9. Mullion			
10. Wind Breaker			
11 Dual Action			
12. Other			
C. PANEL WALL			
1. Siding			
2. Soffits			
3. EIFS			
4. Storefronts			
5. Curtain walls			
6. Wall louver			
7. Glass block			
8. Membrane			
9. Greenhouse			
10. Other			
D. ROOFING PRODUCTS			
1. Asphalt Shingles			
2. Underlayments			
3. Roofing Fasteners			
4. Non-structural Metal Rf			
5. Built-Up Roofing			
6. Modified Bitumen			
7. Single Ply Roofing Sys			
8. Roofing Tiles			
9. Roofing Insulation			
10. Waterproofing			
11. Wood shingles /shakes			
12. Roofing Slate			

Category/Subcategory (cont.)	Manufacturer	Product Description	Approval Number(s)
13. Liquid Applied Roof Sys			
14. Cements-Adhesives – Coatings			
15. Roof Tile Adhesive			
16. Spray Applied Polyurethane Roof			
17. Other			
E. SHUTTERS			
1. Accordion			
2. Bahama			
3. Storm Panels			
4. Colonial			
5. Roll-up			
6. Equipment			
7. Others			
F. SKYLIGHTS			
1. Skylight			
2. Other			
G. STRUCTURAL COMPONENTS			
1. Wood connector/anchor			
2. Truss plates			
3. Engineered lumber			
4. Railing			
5. Coolers-freezers			
6. Concrete Admixtures			
7. Material			
8. Insulation Forms			
9. Plastics			
10. Deck-Roof			
11. Wall			
12. Sheds			
13. Other			
H. NEW EXTERIOR ENVELOPE PRODUCTS			
1.			
2.			

The products listed below did not demonstrate product approval at plan review. I understand that at the time of inspection of these products, the following information must be available to the inspector on the jobsite; 1) copy of the product approval, 2) the performance characteristics which the product was tested and certified to comply with, 3) copy of the applicable manufacturers installation requirements.

I understand these products may have to be removed if approval cannot be demonstrated during inspection

Chris W. Cox

Contractor or Contractor's Authorized Agent Signature

CHRIS W. COX 11-17-05

Print Name Date

CSE LOT 19

Location

Permit # **(FOR STAFF USE ONLY)**

Project Information for: L139395
Builder: CORNERSTONE DEVELOPM Date: 11/10/2005
Lot: LOT 19 COUNTRY SIDE EST. Start Number: 1458
Subdivision: N/A
County or City: COLUMBIA COUNTY
Truss Page Count: 32

Truss Design Load Information (UNO) Design Program: MiTek 5.2 / 6.2

Gravity		**Wind**		**Building Code:**	FBC2004
Roof (psf):	42	Wind Standard:	ASCE 7-02		
Floor (psf):	55	Wind Speed (mph):	110		

Note: See individual truss drawings for special loading conditions

Building Designer, responsible for Structural Engineering: (See attached)
ZECHER, BRYAN C. CBC 054575
Address: PO BOX 815
ALACHUA,FL 32615 Designer: 135

Truss Design Engineer: Thomas, E. Miller, P.E., 56877 - Byron K. Anderson, PE FL 60987
Company: Structural Engineering and Inspections, Inc. EB 9196
Address 16105 N. Florida Ave, Ste B, Lutz, FL 33549

Notes:
1. Truss Design Engineer is responsible for the individual trusses as components only.
2. Determination as to the suitability and use of these truss components for the structure is the responsibility of the Building Designer of Record, as defined in ANSI/TPI
3. The seal date shown on the individual truss component drawings must match the seal date on this index sheet.
4. Trusses designed for veritcal loads only, unless noted otherwise.

#	Truss ID	Dwg. #	Seal Date	#	Truss ID	Dwg. #	Seal Date
1	CJ1	1110051458	11/10/2005				
2	CJ3	1110051459	11/10/2005				
3	CJ5	1110051460	11/10/2005				
4	EJ2	1110051461	11/10/2005				
5	EJ5	1110051462	11/10/2005				
6	EJ7	1110051463	11/10/2005				
7	EJ7A	1110051464	11/10/2005				
8	EJ7B	1110051465	11/10/2005				
9	EJ7C	1110051466	11/10/2005				
10	HJ2	1110051467	11/10/2005				
11	HJ5	1110051468	11/10/2005				
12	HJ7	1110051469	11/10/2005				
13	T01	1110051470	11/10/2005				
14	T01H	1110051471	11/10/2005				
15	T02	1110051472	11/10/2005				
16	T02H	1110051473	11/10/2005				
17	T03	1110051474	11/10/2005				
18	T04	1110051475	11/10/2005				
19	T05	1110051476	11/10/2005				
20	T06	1110051477	11/10/2005				
21	T07	1110051478	11/10/2005				
22	T08	1110051479	11/10/2005				
23	T09	1110051480	11/10/2005				
24	T10	1110051481	11/10/2005				
25	T11	1110051482	11/10/2005				
26	T12	1110051483	11/10/2005				
27	T13	1110051484	11/10/2005				
28	T14	1110051485	11/10/2005				
29	T15H	1110051486	11/10/2005				
30	T15HGR	1110051487	11/10/2005				
31	T16	1110051488	11/10/2005				
32	T17	1110051489	11/10/2005				

NOV 1 0 2005

Dwg.#1110051457

10:00:13 AM

Licensee Details

Licensee Information

Name:	**ZECHER, BRYAN CHRISTIAN (Primary Name)**
	BRYAN ZECHER CONSTRUCTION INC (DBA
Main Address:	**P O BOX 815** **LAKE CITY, Florida 32056**
Lic. Location:	**465 NW ORANGE ST** **LAKE CITY, FL 32055 United States Columbia**

License Information

License Type:	**Certified Building Contractor**
Rank:	**Cert Building**
License Number:	**CBC054575**
Status:	**Current, Active**
Licensure Date:	**12/05/1991**
Expires:	**08/31/2006**

Special Qualifications	Effective Date
Bldg Code Core Course Credit	
Qualified Business License Required	04/13/2004

View Related License Information

View License Complaint

New Search

| Terms of Use | | Privacy Statement |

NOVEMBER 10,2005 TRUSS DESIGN ENGINEER:
THOMAS E. MILLER PE 56877, BYRON K. ANDERSON PE 60987
STRUCTURAL ENGINEERING AND INSPECTIONS, INC. EB 9196
16105 N. FLORIDA AVE. STE B, LUTZ, FL 33549

Job	Truss	Truss Type	Qty	Ply	BRYAN ZECHER-LOT 19 CSE Dwg.#1110051458
L139395	CJ1	MONO TRUSS	14	1	Job Reference (optional)

Builders FirstSource, Lake City, Fl 32055 — 6.200 s Jul 13 2005 MiTek Industries, Inc. Mon Nov 07 15:38:12 2005 Page 1

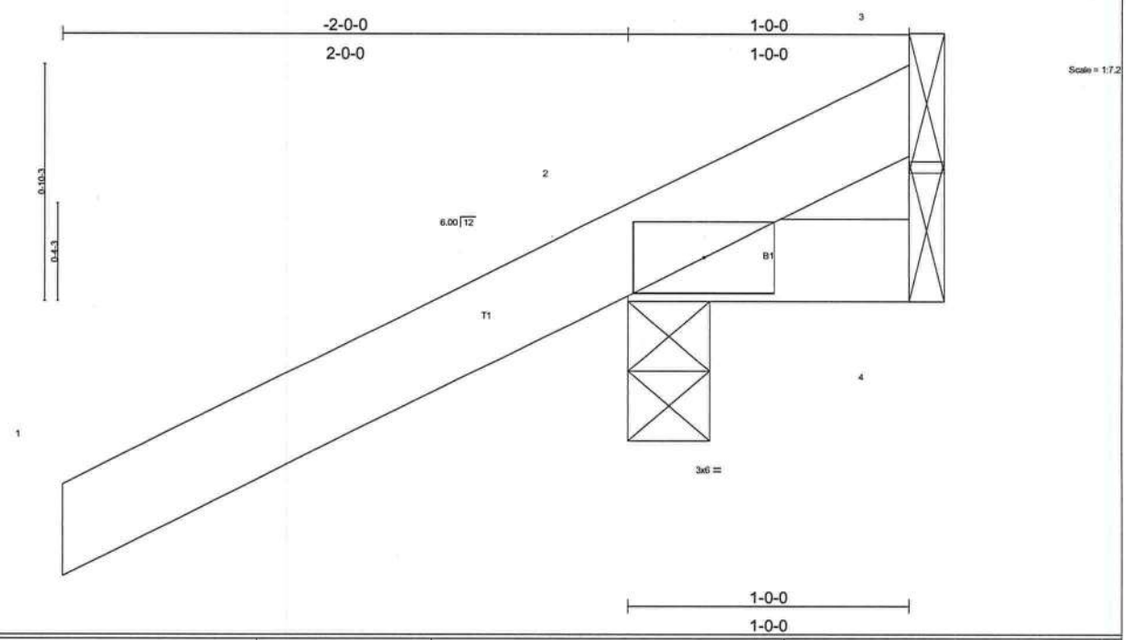

LOADING (psf)		SPACING	2-0-0	CSI		DEFL	in	(loc)	l/defl	L/d	PLATES	GRIP
TCLL	20.0	Plates Increase	1.25	TC	0.28	Vert(LL)	-0.00	2	>999	240	MT20	244/190
TCDL	7.0	Lumber Increase	1.25	BC	0.01	Vert(TL)	-0.00	2	>999	180		
BCLL	10.0	Rep Stress Incr	YES	WB	0.00	Horz(TL)	0.00	3	n/a	n/a		
BCDL	5.0	Code FBC2004/TPI2002		(Matrix)							Weight: 7 lb	

LUMBER
TOP CHORD 2 X 4 SYP No.2
BOT CHORD 2 X 4 SYP No.2

BRACING
TOP CHORD Structural wood sheathing directly applied or 1-0-0 oc purlins.
BOT CHORD Rigid ceiling directly applied or 10-0-0 oc bracing.

REACTIONS (lb/size) 2=266/0-3-8, 4=14/Mechanical, 3=-90/Mechanical
Max Horz 2=87(load case 5)
Max Uplift2=-286(load case 5), 4=-9(load case 3), 3=-90(load case 1)
Max Grav 2=266(load case 1), 4=14(load case 1), 3=127(load case 5)

FORCES (lb) - Maximum Compression/Maximum Tension
TOP CHORD 1-2=0/47, 2-3=-69/75
BOT CHORD 2-4=0/0

NOTES
1) Wind: ASCE 7-02; 110mph (3-second gust); h=20ft; TCDL=4.2psf; BCDL=3.0psf; Category II; Exp B; enclosed; MWFRS gable end zone and C-C Exterior(2) zone; porch left and right exposed; Lumber DOL=1.60 plate grip DOL=1.60. This truss is designed for C-C for members and forces, and for MWFRS for reactions specified.
2) Refer to girder(s) for truss to truss connections.
3) Provide mechanical connection (by others) of truss to bearing plate capable of withstanding 286 lb uplift at joint 2, 9 lb uplift at joint 4 and 90 lb uplift at joint 3.

LOAD CASE(S) Standard

NOVEMBER 10,2005 TRUSS DESIGN ENGINEER:
THOMAS E. MILLER PE 56877, BYRON K. ANDERSON PE 60987
STRUCTURAL ENGINEERING AND INSPECTIONS, INC. EB 9196
16105 N. FLORIDA AVE. STE B, LUTZ, FL 33549

Job	Truss	Truss Type	Qty	Ply	BRYAN ZECHER-LOT 19 CSF Dwg.#1110051459
L139395	CJ3	MONO TRUSS	10	1	Job Reference (optional)

Builders FirstSource, Lake City, Fl 32055 — 6.200 s Jul 13 2005 MiTek Industries, Inc. Mon Nov 07 15:38:13 2005 Page 1

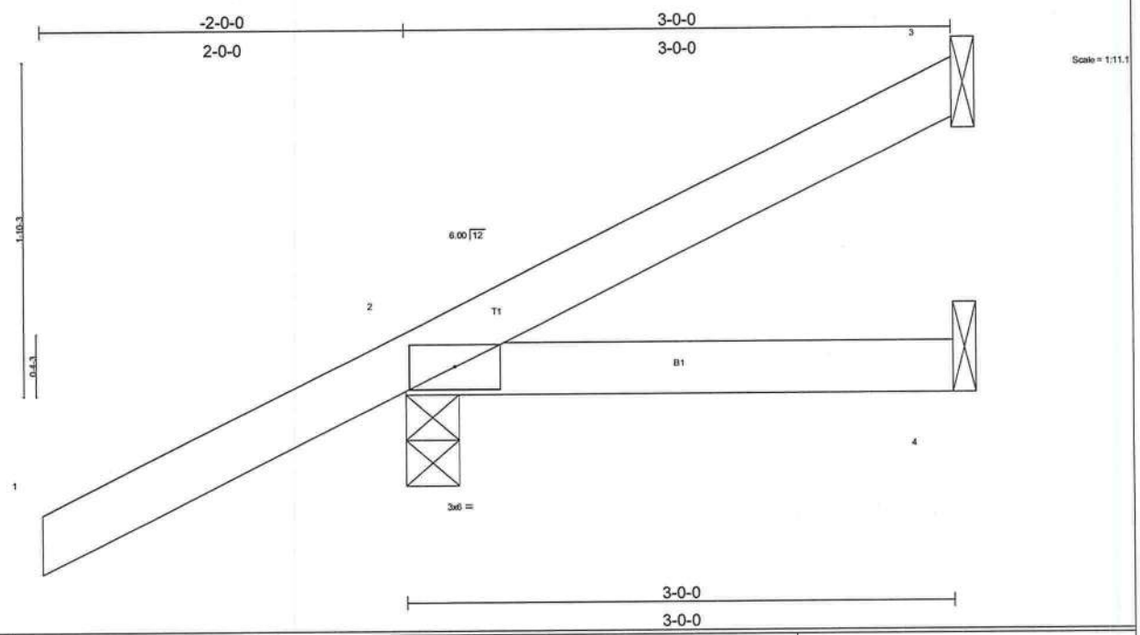

LOADING (psf)		SPACING	2-0-0	CSI		DEFL	in	(loc)	l/defl	L/d	PLATES	GRIP
TCLL	20.0	Plates Increase	1.25	TC	0.29	Vert(LL)	0.01	2-4	>999	240	MT20	244/190
TCDL	7.0	Lumber Increase	1.25	BC	0.08	Vert(TL)	0.01	2-4	>999	180		
BCLL	10.0	Rep Stress Incr	YES	WB	0.00	Horz(TL)	-0.00	3	n/a	n/a		
BCDL	5.0	Code FBC2004/TPI2002		(Matrix)							Weight: 13 lb	

LUMBER
TOP CHORD 2 X 4 SYP No.2
BOT CHORD 2 X 4 SYP No.2

BRACING
TOP CHORD Structural wood sheathing directly applied or 3-0-0 oc purlins.
BOT CHORD Rigid ceiling directly applied or 10-0-0 oc bracing.

REACTIONS (lb/size) 3=31/Mechanical, 2=278/0-3-8, 4=42/Mechanical
Max Horz 2=132(load case 5)
Max Uplift3=-28(load case 6), 2=-238(load case 5), 4=-27(load case 3)

FORCES (lb) - Maximum Compression/Maximum Tension
TOP CHORD 1-2=0/47, 2-3=-57/7
BOT CHORD 2-4=0/0

NOTES
1) Wind: ASCE 7-02; 110mph (3-second gust); h=20ft; TCDL=4.2psf; BCDL=3.0psf; Category II; Exp B; enclosed; MWFRS gable end zone and C-C Exterior(2) zone; porch left and right exposed; Lumber DOL=1.60 plate grip DOL=1.60. This truss is designed for C-C for members and forces, and for MWFRS for reactions specified.
2) Refer to girder(s) for truss to truss connections.
3) Provide mechanical connection (by others) of truss to bearing plate capable of withstanding 28 lb uplift at joint 3, 238 lb uplift at joint 2 and 27 lb uplift at joint 4.

LOAD CASE(S) Standard

NOVEMBER 10,2005 TRUSS DESIGN ENGINEER:
THOMAS E. MILLER PE 56877, BYRON K. ANDERSON PE 60987
STRUCTURAL ENGINEERING AND INSPECTIONS, INC. EB 9196
16105 N. FLORIDA AVE. STE B, LUTZ, FL 33549

Job	Truss	Truss Type	Qty	Ply	BRYAN ZECHER-19,19,CSF Dwg.#1110051460
L139395	CJ5	MONO TRUSS	8	1	Job Reference (optional)

Builders FirstSource, Lake City, Fl 32055 — 6.200 s Jul 13 2005 MiTek Industries, Inc. Mon Nov 07 15:38:13 2005 Page 1

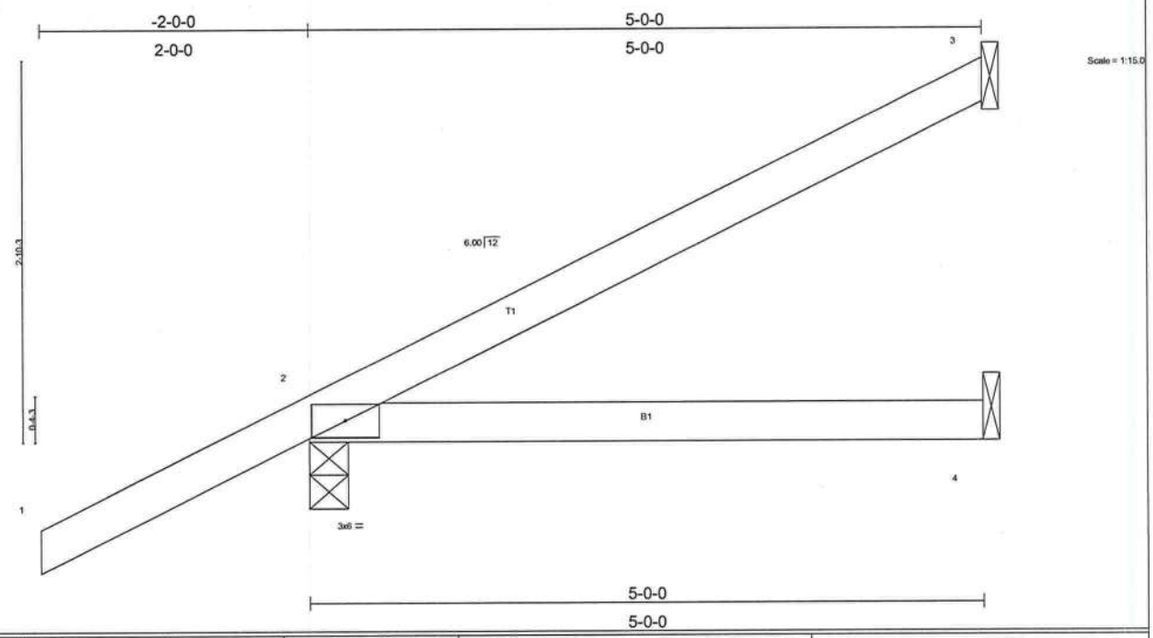

LOADING (psf)		SPACING	2-0-0	CSI		DEFL	in	(loc)	l/defl	L/d	PLATES	GRIP
TCLL	20.0	Plates Increase	1.25	TC	0.29	Vert(LL)	-0.03	2-4	>999	240	MT20	244/190
TCDL	7.0	Lumber Increase	1.25	BC	0.16	Vert(TL)	-0.05	2-4	>999	180		
BCLL	10.0	Rep Stress Incr	YES	WB	0.00	Horz(TL)	-0.00	3	n/a	n/a		
BCDL	5.0	Code FBC2004/TPI2002		(Matrix)							Weight: 19 lb	

LUMBER
TOP CHORD 2 X 4 SYP No.2
BOT CHORD 2 X 4 SYP No.2

BRACING
TOP CHORD Structural wood sheathing directly applied or 5-0-0 oc purlins.
BOT CHORD Rigid ceiling directly applied or 10-0-0 oc bracing.

REACTIONS (lb/size) 3=103/Mechanical, 2=343/0-3-8, 4=72/Mechanical
Max Horz 2=178(load case 5)
Max Uplift3=-87(load case 5), 2=-199(load case 5)

FORCES (lb) - Maximum Compression/Maximum Tension
TOP CHORD 1-2=0/47, 2-3=-88/36
BOT CHORD 2-4=0/0

NOTES
1) Wind: ASCE 7-02; 110mph (3-second gust); h=20ft; TCDL=4.2psf; BCDL=3.0psf; Category II; Exp B; enclosed; MWFRS gable end zone and C-C Exterior(2) zone; Lumber DOL=1.60 plate grip DOL=1.60. This truss is designed for C-C for members and forces, and for MWFRS for reactions specified.
2) Refer to girder(s) for truss to truss connections.
3) Provide mechanical connection (by others) of truss to bearing plate capable of withstanding 87 lb uplift at joint 3 and 199 lb uplift at joint 2.

LOAD CASE(S) Standard

NOVEMBER 10,2005 TRUSS DESIGN ENGINEER:
THOMAS E. MILLER PE 56877, BYRON K. ANDERSON PE 60987
STRUCTURAL ENGINEERING AND INSPECTIONS, INC. EB 9196
16105 N. FLORIDA AVE. STE B, LUTZ, FL 33549

Job	Truss	Truss Type	Qty	Ply	BRYAN ZECHER-LOT 19 CSE Dwg.#1110051461
L139395	EJ2	MONO TRUSS	5	1	Job Reference (optional)

Builders FirstSource, Lake City, Fl 32055 — 6.200 s Jul 13 2005 MiTek Industries, Inc. Mon Nov 07 15:38:14 2005 Page 1

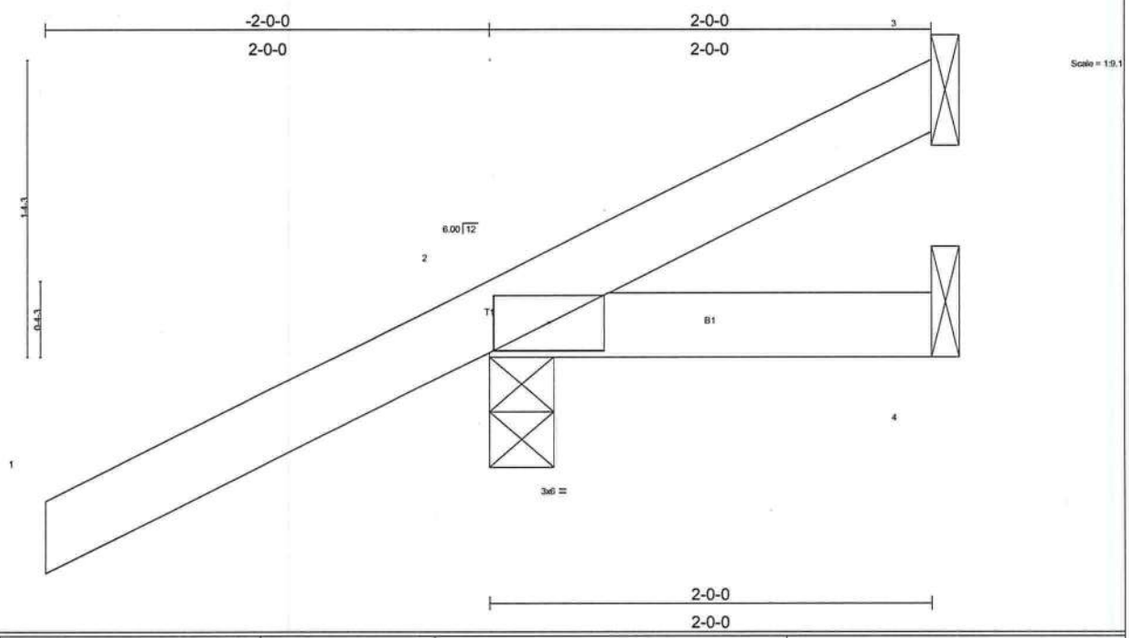

LOADING (psf)		SPACING 2-0-0		CSI		DEFL	in	(loc)	l/defl	L/d	PLATES	GRIP
TCLL	20.0	Plates Increase	1.25	TC	0.27	Vert(LL)	-0.00	2	>999	240	MT20	244/190
TCDL	7.0	Lumber Increase	1.25	BC	0.03	Vert(TL)	-0.00	2-4	>999	180		
BCLL	10.0	Rep Stress Incr	YES	WB	0.00	Horz(TL)	-0.00	3	n/a	n/a		
BCDL	5.0	Code FBC2004/TPI2002		(Matrix)							Weight: 10 lb	

LUMBER
TOP CHORD 2 X 4 SYP No.2
BOT CHORD 2 X 4 SYP No.2

BRACING
TOP CHORD Structural wood sheathing directly applied or 2-0-0 oc purlins.
BOT CHORD Rigid ceiling directly applied or 10-0-0 oc bracing.

REACTIONS (lb/size) 2=249/0-3-8, 4=29/Mechanical, 3=-4/Mechanical
Max Horz 2=110(load case 5)
Max Uplift2=-207(load case 5), 3=-8(load case 8)
Max Grav 2=249(load case 1), 4=29(load case 1), 3=25(load case 5)

FORCES (lb) - Maximum Compression/Maximum Tension
TOP CHORD 1-2=0/47, 2-3=-51/11
BOT CHORD 2-4=0/0

NOTES
1) Wind: ASCE 7-02; 110mph (3-second gust); h=20ft; TCDL=4.2psf; BCDL=3.0psf; Category II; Exp B; enclosed; MWFRS gable end zone and C-C Exterior(2) zone; Lumber DOL=1.60 plate grip DOL=1.60. This truss is designed for C-C for members and forces, and for MWFRS for reactions specified.
2) Refer to girder(s) for truss to truss connections.
3) Provide mechanical connection (by others) of truss to bearing plate capable of withstanding 207 lb uplift at joint 2 and 8 lb uplift at joint 3.

LOAD CASE(S) Standard

NOVEMBER 10,2005 TRUSS DESIGN ENGINEER:
THOMAS E. MILLER PE 56877, BYRON K. ANDERSON PE 60987
STRUCTURAL ENGINEERING AND INSPECTIONS, INC. EB 9196
16105 N. FLORIDA AVE. STE B, LUTZ, FL 33549

Job	Truss	Truss Type	Qty	Ply	BRYAN ZECHER-LOT 19 CSF Dwg.#1110051462
L139395	EJ5	MONO TRUSS	1	1	Job Reference (optional)

Builders FirstSource, Lake City, Fl 32055 — 6.200 s Jul 13 2005 MiTek Industries, Inc. Mon Nov 07 15:38:14 2005 Page 1

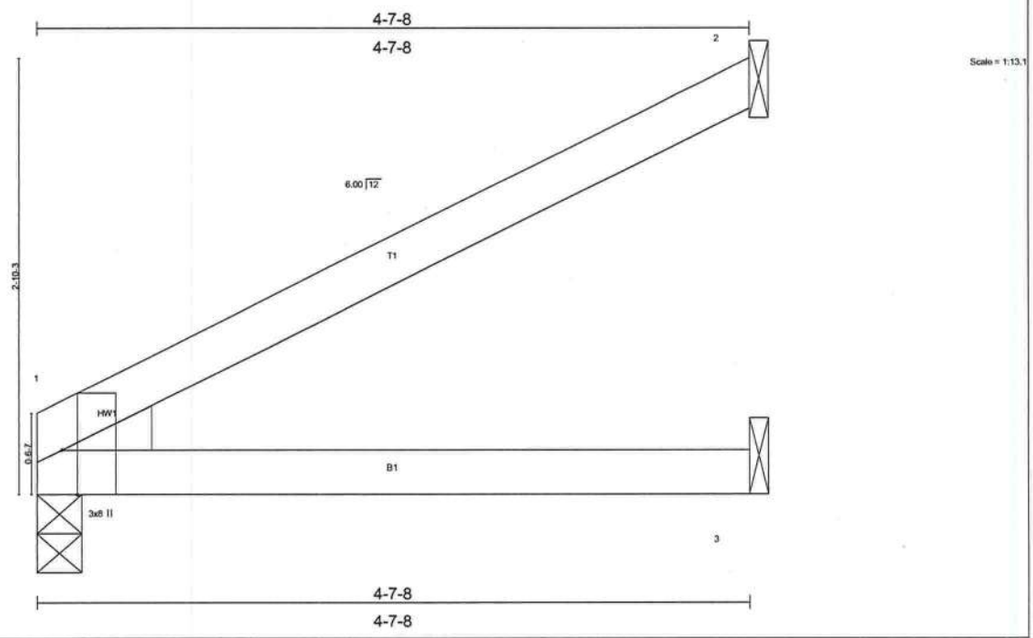

Plate Offsets (X,Y): [1:0-3-8,Edge]

LOADING (psf)		SPACING	2-0-0	CSI		DEFL	in	(loc)	l/defl	L/d	PLATES	GRIP
TCLL	20.0	Plates Increase	1.25	TC	0.29	Vert(LL)	-0.02	1-3	>999	240	MT20	244/190
TCDL	7.0	Lumber Increase	1.25	BC	0.14	Vert(TL)	-0.03	1-3	>999	180		
BCLL	10.0	Rep Stress Incr	YES	WB	0.00	Horz(TL)	-0.00	2	n/a	n/a		
BCDL	5.0	Code FBC2004/TPI2002		(Matrix)							Weight: 16 lb	

LUMBER
TOP CHORD 2 X 4 SYP No.2
BOT CHORD 2 X 4 SYP No.2
WEDGE
Left: 2 X 4 SYP No.3

BRACING
TOP CHORD Structural wood sheathing directly applied or 4-7-8 oc purlins.
BOT CHORD Rigid ceiling directly applied or 10-0-0 oc bracing.

REACTIONS (lb/size) 2=119/Mechanical, 3=66/Mechanical, 1=185/0-3-8
Max Horz 1=116(load case 5)
Max Uplift2=-116(load case 5), 1=-37(load case 5)

FORCES (lb) - Maximum Compression/Maximum Tension
TOP CHORD 1-2=-107/47
BOT CHORD 1-3=0/0

NOTES
1) Wind: ASCE 7-02; 110mph (3-second gust); h=20ft; TCDL=4.2psf; BCDL=3.0psf; Category II; Exp B; enclosed; MWFRS gable end zone and C-C Exterior(2) zone; Lumber DOL=1.60 plate grip DOL=1.60. This truss is designed for C-C for members and forces, and for MWFRS for reactions specified.
2) Refer to girder(s) for truss to truss connections.
3) Provide mechanical connection (by others) of truss to bearing plate capable of withstanding 116 lb uplift at joint 2 and 37 lb uplift at joint 1.

LOAD CASE(S) Standard

NOVEMBER 10,2005 TRUSS DESIGN ENGINEER:
THOMAS E. MILLER PE 56877, BYRON K. ANDERSON PE 60987
STRUCTURAL ENGINEERING AND INSPECTIONS, INC. EB 9196
16105 N. FLORIDA AVE. STE B, LUTZ, FL 33549

Job	Truss	Truss Type	Qty	Ply	BRYAN ZECHER-EST 19 CSE Dwg.#1110051463
L139395	EJ7	MONO TRUSS	20	1	Job Reference (optional)

Builders FirstSource, Lake City, Fl 32055 — 6.200 s Jul 13 2005 MiTek Industries, Inc. Mon Nov 07 15:38:15 2005 Page 1

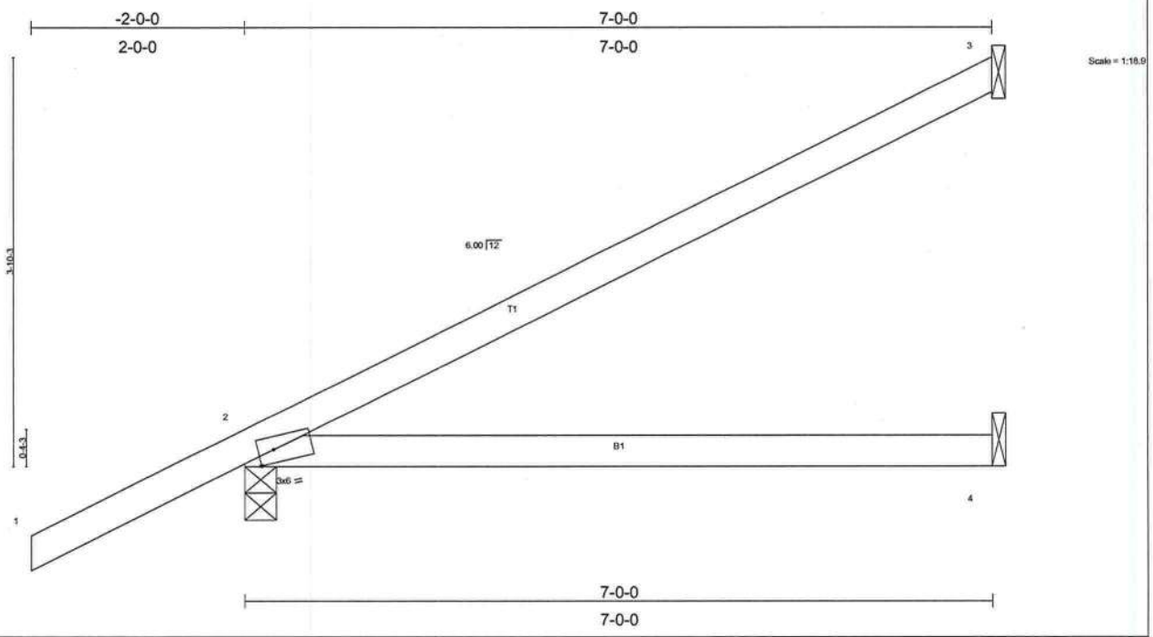

Plate Offsets (X,Y): [2:0-1-12,Edge]

LOADING (psf)		SPACING	2-0-0	CSI		DEFL	in	(loc)	l/defl	L/d	PLATES	GRIP
TCLL	20.0	Plates Increase	1.25	TC	0.48	Vert(LL)	-0.12	2-4	>664	240	MT20	244/190
TCDL	7.0	Lumber Increase	1.25	BC	0.35	Vert(TL)	-0.21	2-4	>397	180		
BCLL	10.0	Rep Stress Incr	YES	WB	0.00	Horz(TL)	-0.00	3	n/a	n/a		
BCDL	5.0	Code FBC2004/TPI2002		(Matrix)							Weight: 26 lb	

LUMBER
TOP CHORD 2 X 4 SYP No.2
BOT CHORD 2 X 4 SYP No.2

BRACING
TOP CHORD Structural wood sheathing directly applied or 6-0-0 oc purlins.
BOT CHORD Rigid ceiling directly applied or 10-0-0 oc bracing.

REACTIONS (lb/size) 3=162/Mechanical, 2=419/0-3-8, 4=104/Mechanical
Max Horz 2=224(load case 5)
Max Uplift3=-134(load case 5), 2=-210(load case 5)

FORCES (lb) - Maximum Compression/Maximum Tension
TOP CHORD 1-2=0/47, 2-3=-119/58
BOT CHORD 2-4=0/0

NOTES
1) Wind: ASCE 7-02; 110mph (3-second gust); h=20ft; TCDL=4.2psf; BCDL=3.0psf; Category II; Exp B; enclosed; MWFRS gable end zone and C-C Exterior(2) zone; Lumber DOL=1.60 plate grip DOL=1.60. This truss is designed for C-C for members and forces, and for MWFRS for reactions specified.
2) Refer to girder(s) for truss to truss connections.
3) Provide mechanical connection (by others) of truss to bearing plate capable of withstanding 134 lb uplift at joint 3 and 210 lb uplift at joint 2.

LOAD CASE(S) Standard

NOVEMBER 10,2005 TRUSS DESIGN ENGINEER:
THOMAS E. MILLER PE 56877, BYRON K. ANDERSON PE 60987
STRUCTURAL ENGINEERING AND INSPECTIONS, INC. EB 9196
16105 N. FLORIDA AVE. STE B, LUTZ, FL 33549

Job	Truss	Truss Type	Qty	Ply	BRYAN ZECHER-LOT 19 CSF Dwg.#1110051464
L139395	EJ7A	MONO HIP	1	1	Job Reference (optional)

Builders FirstSource, Lake City, Fl 32055 — 6.200 s Jul 13 2005 MiTek Industries, Inc. Mon Nov 07 15:38:16 2005 Page 1

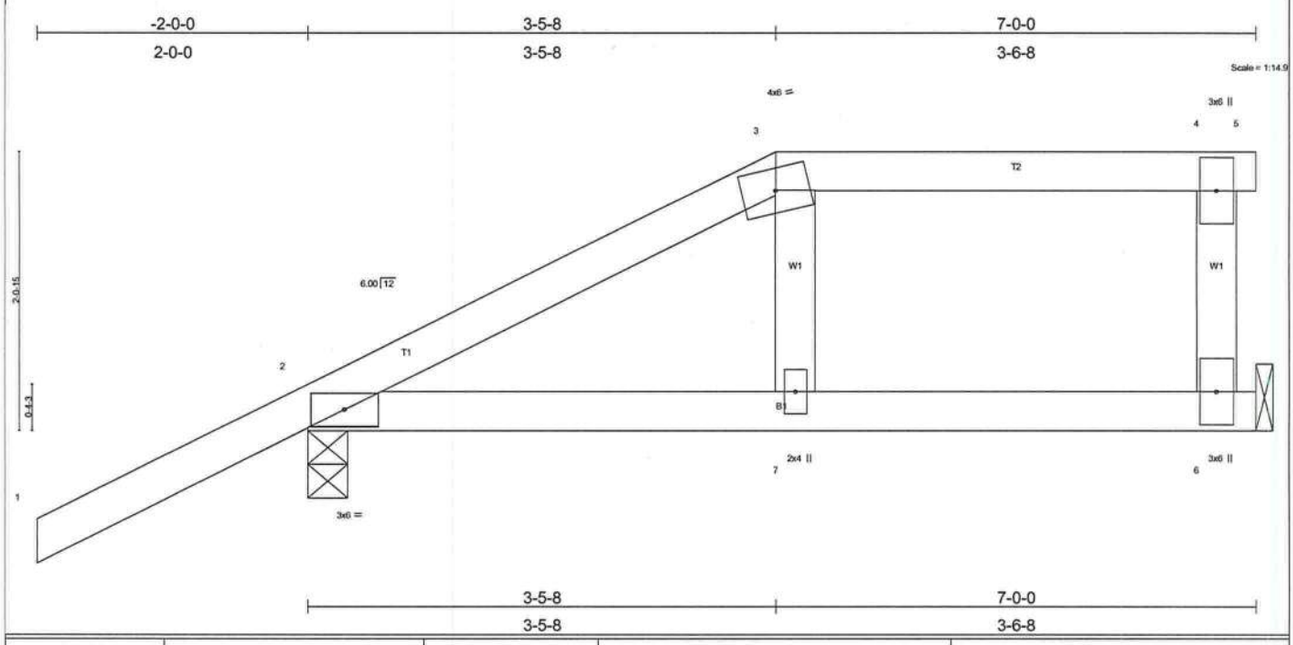

LOADING (psf)		SPACING	2-0-0	CSI		DEFL	in	(loc)	l/defl	L/d	PLATES	GRIP
TCLL	20.0	Plates Increase	1.25	TC	0.49	Vert(LL)	0.03	7	>999	240	MT20	244/190
TCDL	7.0	Lumber Increase	1.25	BC	0.30	Vert(TL)	-0.05	2-7	>999	180		
BCLL	10.0	Rep Stress Incr	YES	WB	0.03	Horz(TL)	0.00	6	n/a	n/a		
BCDL	5.0	Code FBC2004/TPI2002		(Matrix)							Weight: 29 lb	

LUMBER
TOP CHORD 2 X 4 SYP No.2
BOT CHORD 2 X 4 SYP No.2
WEBS 2 X 4 SYP No.3

BRACING
TOP CHORD Structural wood sheathing directly applied or 6-0-0 oc purlins, except end verticals.
BOT CHORD Rigid ceiling directly applied or 10-0-0 oc bracing.

REACTIONS (lb/size) 6=261/Mechanical, 2=410/0-3-8
Max Horz 2=144(load case 5)
Max Uplift6=-99(load case 4), 2=-226(load case 5)

FORCES (lb) - Maximum Compression/Maximum Tension
TOP CHORD 1-2=0/47, 2-3=-241/69, 3-4=-162/89, 4-5=0/0, 4-6=-147/119
BOT CHORD 2-7=-98/162, 6-7=-90/162
WEBS 3-7=-5/105

NOTES
1) Wind: ASCE 7-02; 110mph (3-second gust); h=20ft; TCDL=4.2psf; BCDL=3.0psf; Category II; Exp B; enclosed; MWFRS gable end zone and C-C Exterior(2) zone; Lumber DOL=1.60 plate grip DOL=1.60. This truss is designed for C-C for members and forces, and for MWFRS for reactions specified.
2) Provide adequate drainage to prevent water ponding.
3) Refer to girder(s) for truss to truss connections.
4) Provide mechanical connection (by others) of truss to bearing plate capable of withstanding 99 lb uplift at joint 6 and 226 lb uplift at joint 2.

LOAD CASE(S) Standard

NOVEMBER 10,2005 TRUSS DESIGN ENGINEER:
THOMAS E. MILLER PE 56877, BYRON K. ANDERSON PE 60987
STRUCTURAL ENGINEERING AND INSPECTIONS, INC. EB 9196
16105 N. FLORIDA AVE. STE B, LUTZ, FL 33549

Job	Truss	Truss Type	Qty	Ply	BRYAN ZECHER-EST 19 CSF Dwg.#1110051465
L139395	EJ7B	COMMON	2	1	Job Reference (optional)

Builders FirstSource, Lake City, Fl 32055 — 6.200 s Jul 13 2005 MiTek Industries, Inc. Mon Nov 07 15:38:16 2005 Page 1

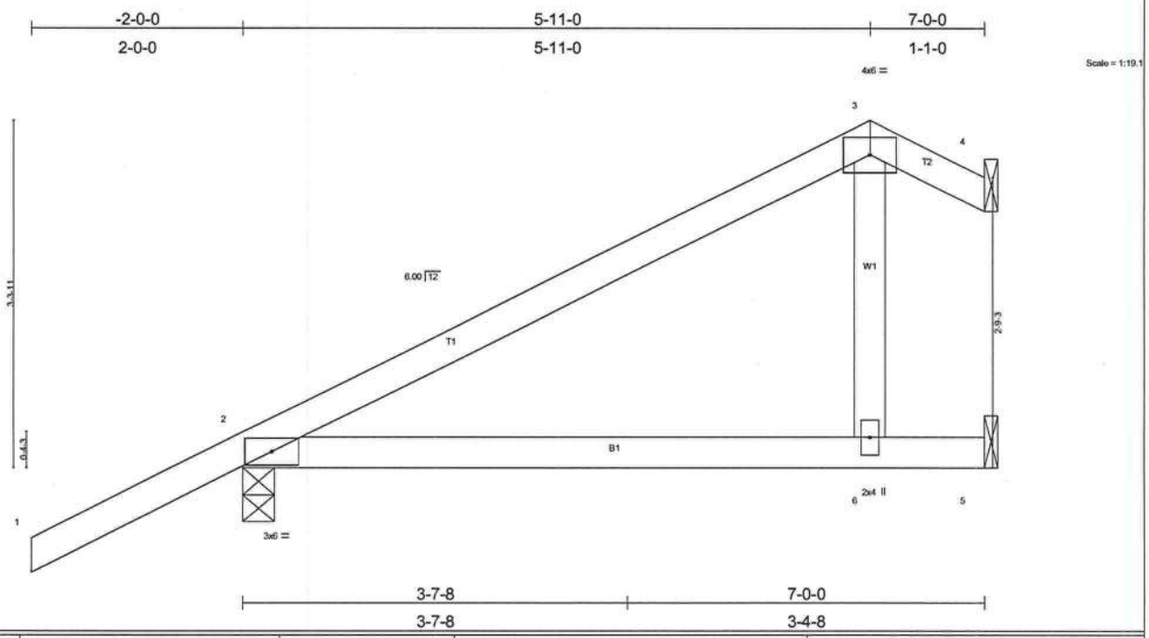

LOADING (psf)		SPACING	2-0-0	CSI		DEFL	in	(loc)	l/defl	L/d	PLATES	GRIP
TCLL	20.0	Plates Increase	1.25	TC	0.40	Vert(LL)	-0.14	2-6	>577	240	MT20	244/190
TCDL	7.0	Lumber Increase	1.25	BC	0.39	Vert(TL)	-0.23	2-6	>354	180		
BCLL	10.0	Rep Stress Incr	YES	WB	0.05	Horz(TL)	0.12	4	n/a	n/a		
BCDL	5.0	Code FBC2004/TPI2002		(Matrix)							Weight: 30 lb	

LUMBER
TOP CHORD 2 X 4 SYP No.2
BOT CHORD 2 X 4 SYP No.2
WEBS 2 X 4 SYP No.3

BRACING
TOP CHORD Structural wood sheathing directly applied or 6-0-0 oc purlins.
BOT CHORD Rigid ceiling directly applied or 10-0-0 oc bracing.

REACTIONS (lb/size) 4=101/Mechanical, 2=419/0-3-8, 5=166/Mechanical
Max Horz 2=184(load case 5)
Max Uplift4=-7(load case 6), 2=-227(load case 5), 5=-104(load case 5)
Max Grav 4=107(load case 10), 2=419(load case 1), 5=166(load case 1)

FORCES (lb) - Maximum Compression/Maximum Tension
TOP CHORD 1-2=0/47, 2-3=-86/44, 3-4=-46/8
BOT CHORD 2-6=-0/0, 5-6=0/0
WEBS 3-6=-79/212

NOTES
1) Unbalanced roof live loads have been considered for this design.
2) Wind: ASCE 7-02; 110mph (3-second gust); h=20ft; TCDL=4.2psf; BCDL=3.0psf; Category II; Exp B; enclosed; MWFRS gable end zone and C-C Exterior(2) zone; Lumber DOL=1.60 plate grip DOL=1.60. This truss is designed for C-C for members and forces, and for MWFRS for reactions specified.
3) Refer to girder(s) for truss to truss connections.
4) Provide mechanical connection (by others) of truss to bearing plate capable of withstanding 7 lb uplift at joint 4, 227 lb uplift at joint 2 and 104 lb uplift at joint 5.

LOAD CASE(S) Standard

NOVEMBER 10,2005 TRUSS DESIGN ENGINEER:
THOMAS E. MILLER PE 56877, BYRON K. ANDERSON PE 60987
STRUCTURAL ENGINEERING AND INSPECTIONS, INC. EB 9196
16105 N. FLORIDA AVE. STE B, LUTZ, FL 33549

Job	Truss	Truss Type	Qty	Ply	BRYAN ZECHER-LOT 19 CSF Dwg.#1110051466	J1323694
L139395	EJ7C	MONO HIP	1	1	Job Reference (optional)	

Builders FirstSource, Lake City, Fl 32055 — 6.200 s Jul 13 2005 MiTek Industries, Inc. Mon Nov 07 15:38:17 2005 Page 1

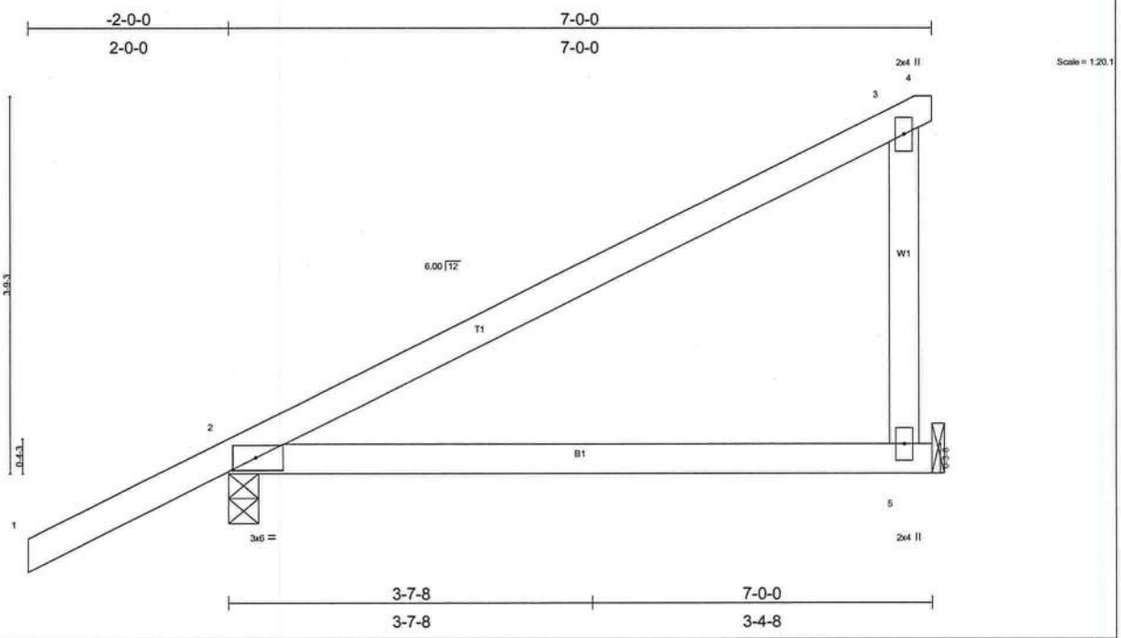

Plate Offsets (X,Y): [2:0-2-12,0-1-8]

LOADING (psf)		SPACING	2-0-0	CSI		DEFL	in	(loc)	l/defl	L/d	PLATES	GRIP
TCLL	20.0	Plates Increase	1.25	TC	0.41	Vert(LL)	-0.11	2-5	>739	240	MT20	244/190
TCDL	7.0	Lumber Increase	1.25	BC	0.32	Vert(TL)	-0.18	2-5	>442	180		
BCLL	10.0	Rep Stress Incr	YES	WB	0.05	Horz(TL)	0.00		n/a	n/a		
BCDL	5.0	Code FBC2004/TPI2002		(Matrix)							Weight: 30 lb	

LUMBER
TOP CHORD 2 X 4 SYP No.2
BOT CHORD 2 X 4 SYP No.2
WEBS 2 X 4 SYP No.3

BRACING
TOP CHORD Structural wood sheathing directly applied or 6-0-0 oc purlins.
BOT CHORD Rigid ceiling directly applied or 10-0-0 oc bracing.

REACTIONS (lb/size) 2=411/0-3-8, 5=260/Mechanical
Max Horz 2=223(load case 5)
Max Uplift2=-207(load case 5), 5=-129(load case 5)

FORCES (lb) - Maximum Compression/Maximum Tension
TOP CHORD 1-2=0/47, 2-3=-115/56, 3-4=-1/0
BOT CHORD 2-5=0/0
WEBS 3-5=-160/194

NOTES
1) Wind: ASCE 7-02; 110mph (3-second gust); h=20ft; TCDL=4.2psf; BCDL=3.0psf; Category II; Exp B; enclosed; MWFRS gable end zone and C-C Exterior(2) zone; Lumber DOL=1.60 plate grip DOL=1.60. This truss is designed for C-C for members and forces, and for MWFRS for reactions specified.
2) Refer to girder(s) for truss to truss connections.
3) Provide mechanical connection (by others) of truss to bearing plate capable of withstanding 207 lb uplift at joint 2 and 129 lb uplift at joint 5.

LOAD CASE(S) Standard

NOVEMBER 10,2005 TRUSS DESIGN ENGINEER:
THOMAS E. MILLER PE 56877, BYRON K. ANDERSON PE 60987
STRUCTURAL ENGINEERING AND INSPECTIONS, INC. EB 9196
16105 N. FLORIDA AVE. STE B, LUTZ, FL 33549

Job	Truss	Truss Type	Qty	Ply	BRYAN ZECHER-LOT 19 CSF Dwg.#1110051467
L139395	HJ2	MONO TRUSS	2	1	Job Reference (optional)

Builders FirstSource, Lake City, Fl 32055 — 6.200 s Jul 13 2005 MiTek Industries, Inc. Mon Nov 07 15:38:18 2005 Page 1

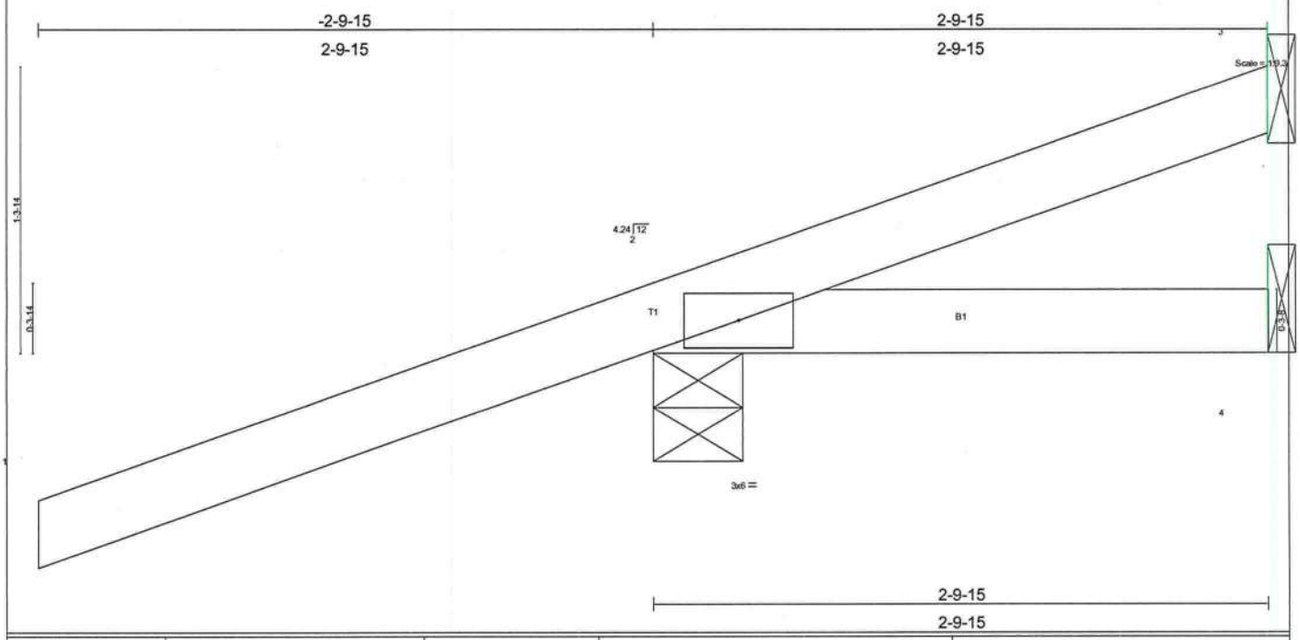

LOADING (psf)		SPACING	2-0-0	CSI		DEFL	in	(loc)	l/defl	L/d	PLATES	GRIP
TCLL	20.0	Plates Increase	1.25	TC	0.53	Vert(LL)	-0.00	2	>999	240	MT20	244/190
TCDL	7.0	Lumber Increase	1.25	BC	0.02	Vert(TL)	-0.00	2-4	>999	180		
BCLL	10.0	Rep Stress Incr	NO	WB	0.00	Horz(TL)	-0.00	3	n/a	n/a		
BCDL	5.0	Code FBC2004/TPI2002		(Matrix)							Weight: 13 lb	

LUMBER
TOP CHORD 2 X 4 SYP No.2
BOT CHORD 2 X 4 SYP No.2

BRACING
TOP CHORD Structural wood sheathing directly applied or 2-9-15 oc purlins.
BOT CHORD Rigid ceiling directly applied or 10-0-0 oc bracing.

REACTIONS (lb/size) 3=-63/Mechanical, 2=289/0-4-15, 4=18/Mechanical
Max Horz 2=77(load case 2)
Max Uplift3=-63(load case 1), 2=-286(load case 2)
Max Grav 3=89(load case 2), 2=289(load case 1), 4=18(load case 1)

FORCES (lb) - Maximum Compression/Maximum Tension
TOP CHORD 1-2=0/50, 2-3=-42/32
BOT CHORD 2-4=0/0

NOTES
1) Wind: ASCE 7-02; 110mph (3-second gust); h=20ft; TCDL=4.2psf; BCDL=3.0psf; Category II; Exp B; enclosed; MWFRS gable end zone; Lumber DOL=1.60 plate grip DOL=1.60.
2) Refer to girder(s) for truss to truss connections.
3) Provide mechanical connection (by others) of truss to bearing plate capable of withstanding 63 lb uplift at joint 3 and 286 lb uplift at joint 2.
4) In the LOAD CASE(S) section, loads applied to the face of the truss are noted as front (F) or back (B).

LOAD CASE(S) Standard
1) Regular: Lumber Increase=1.25, Plate Increase=1.25
Uniform Loads (plf)
Vert: 1-2=-54
Trapezoidal Loads (plf)
Vert: 2=-3(F=26, B=26)-to-3=-38(F=8, B=8), 2=-0(F=15, B=15)-to-4=-21(F=4, B=4)

NOVEMBER 10,2005 TRUSS DESIGN ENGINEER:
THOMAS E. MILLER PE 56877, BYRON K. ANDERSON PE 60987
STRUCTURAL ENGINEERING AND INSPECTIONS, INC. EB 9196
16105 N. FLORIDA AVE. STE B, LUTZ, FL 33549

Job	Truss	Truss Type	Qty	Ply	BRYAN ZECHER-LOT 19 CSF Dwg.#1110051468
L139395	HJ5	MONO TRUSS	1	1	Job Reference (optional)

Builders FirstSource, Lake City, Fl 32055 — 6.200 s Jul 13 2005 MiTek Industries, Inc. Mon Nov 07 15:38:18 2005 Page 1

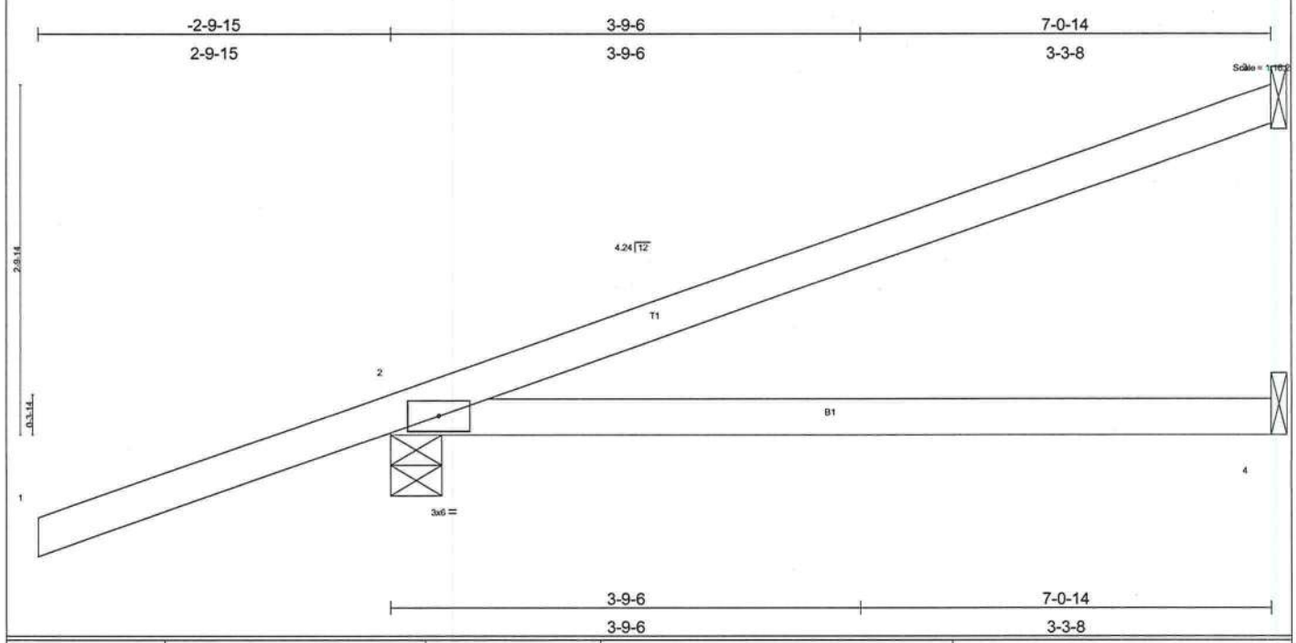

LOADING (psf)		SPACING	2-0-0	CSI		DEFL	in	(loc)	l/defl	L/d	PLATES	GRIP
TCLL	20.0	Plates Increase	1.25	TC	0.53	Vert(LL)	0.11	2-4	>745	240	MT20	244/190
TCDL	7.0	Lumber Increase	1.25	BC	0.28	Vert(TL)	-0.13	2-4	>609	180		
BCLL	10.0	Rep Stress Incr	NO	WB	0.00	Horz(TL)	-0.00	3	n/a	n/a		
BCDL	5.0	Code FBC2004/TPI2002		(Matrix)							Weight: 26 lb	

LUMBER
TOP CHORD 2 X 4 SYP No.2
BOT CHORD 2 X 4 SYP No.2

BRACING
TOP CHORD Structural wood sheathing directly applied or 7-0-14 oc purlins.
BOT CHORD Rigid ceiling directly applied or 10-0-0 oc bracing.

REACTIONS (lb/size) 3=192/Mechanical, 2=375/0-4-15, 4=111/Mechanical
Max Horz 2=167(load case 2)
Max Uplift3=-155(load case 2), 2=-333(load case 2), 4=-55(load case 5)

FORCES (lb) - Maximum Compression/Maximum Tension
TOP CHORD 1-2=0/50, 2-3=-71/45
BOT CHORD 2-4=0/0

NOTES
1) Wind: ASCE 7-02; 110mph (3-second gust); h=20ft; TCDL=4.2psf; BCDL=3.0psf; Category II; Exp B; enclosed; MWFRS gable end zone; porch left and right exposed; Lumber DOL=1.60 plate grip DOL=1.60.
2) Refer to girder(s) for truss to truss connections.
3) Provide mechanical connection (by others) of truss to bearing plate capable of withstanding 155 lb uplift at joint 3, 333 lb uplift at joint 2 and 55 lb uplift at joint 4.
4) In the LOAD CASE(S) section, loads applied to the face of the truss are noted as front (F) or back (B).

LOAD CASE(S) Standard
1) Regular: Lumber Increase=1.25, Plate Increase=1.25
Uniform Loads (plf)
Vert: 1-2=-54
Trapezoidal Loads (plf)
Vert: 2=-3(F=26, B=26)-to-3=-95(F=-21, B=-21), 2=-0(F=15, B=15)-to-4=-53(F=-12, B=-12)

NOVEMBER 10,2005 TRUSS DESIGN ENGINEER:
THOMAS E. MILLER PE 56877, BYRON K. ANDERSON PE 60987
STRUCTURAL ENGINEERING AND INSPECTIONS, INC. EB 9196
16105 N. FLORIDA AVE. STE B, LUTZ, FL 33549

Job	Truss	Truss Type	Qty	Ply	BRYAN ZECHER-LOT 19 CSF Dwg.#1110051469
L139395	HJ7	MONO TRUSS	4	1	Job Reference (optional)

Builders FirstSource, Lake City, Fl 32055 — 6.200 s Jul 13 2005 MiTek Industries, Inc. Mon Nov 07 15:38:19 2005 Page 1

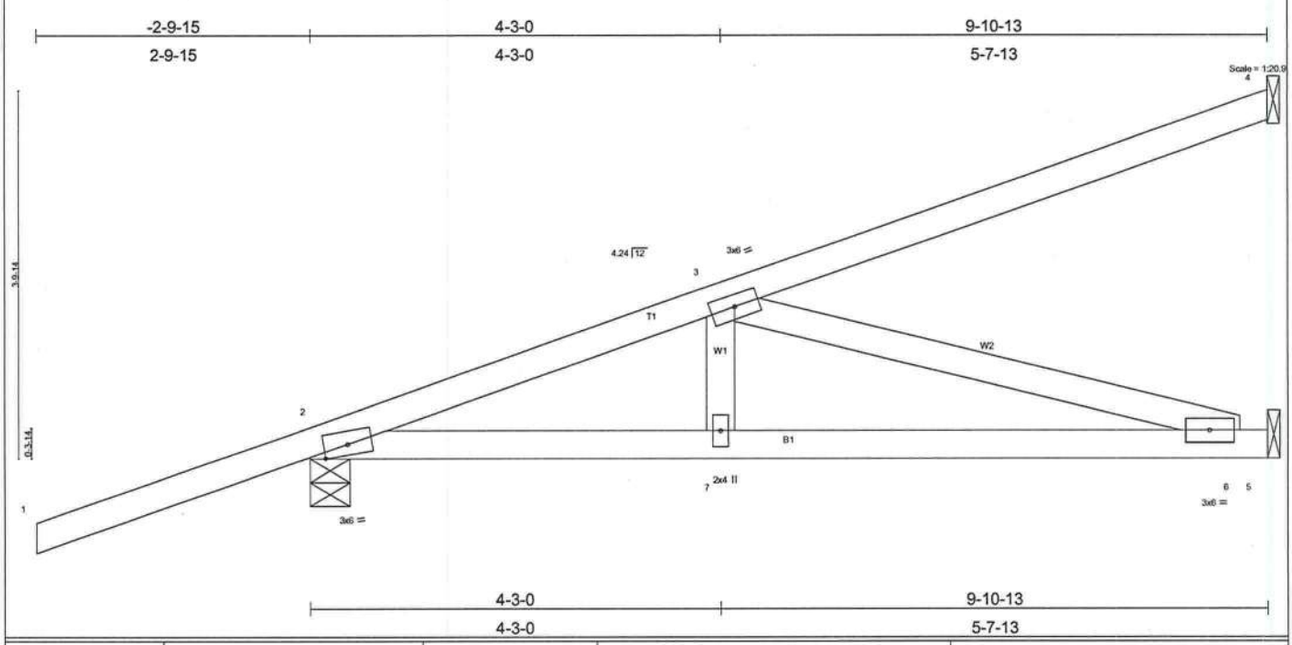

LOADING (psf)		SPACING	2-0-0	CSI		DEFL	in	(loc)	l/defl	L/d	PLATES	GRIP
TCLL	20.0	Plates Increase	1.25	TC	0.61	Vert(LL)	-0.10	6-7	>999	240	MT20	244/190
TCDL	7.0	Lumber Increase	1.25	BC	0.57	Vert(TL)	-0.17	6-7	>685	180		
BCLL	10.0	Rep Stress Incr	NO	WB	0.49	Horz(TL)	0.01	5	n/a	n/a		
BCDL	5.0	Code FBC2004/TPI2002		(Matrix)							Weight: 45 lb	

LUMBER
TOP CHORD 2 X 4 SYP No.2
BOT CHORD 2 X 4 SYP No.2
WEBS 2 X 4 SYP No.3

BRACING
TOP CHORD Structural wood sheathing directly applied or 6-0-0 oc purlins.
BOT CHORD Rigid ceiling directly applied or 10-0-0 oc bracing.

REACTIONS (lb/size) 4=269/Mechanical, 2=532/0-4-15, 5=377/Mechanical
Max Horz 2=269(load case 2)
Max Uplift4=-231(load case 2), 2=-278(load case 2), 5=-63(load case 2)

FORCES (lb) - Maximum Compression/Maximum Tension
TOP CHORD 1-2=0/50, 2-3=-889/121, 3-4=-105/66
BOT CHORD 2-7=-309/824, 6-7=-309/824, 5-6=0/0
WEBS 3-7=0/180, 3-6=-857/322

NOTES
1) Wind: ASCE 7-02; 110mph (3-second gust); h=20ft; TCDL=4.2psf; BCDL=3.0psf; Category II; Exp B; enclosed; MWFRS gable end zone; Lumber DOL=1.60 plate grip DOL=1.60.
2) Refer to girder(s) for truss to truss connections.
3) Provide mechanical connection (by others) of truss to bearing plate capable of withstanding 231 lb uplift at joint 4, 278 lb uplift at joint 2 and 63 lb uplift at joint 5.
4) In the LOAD CASE(S) section, loads applied to the face of the truss are noted as front (F) or back (B).

LOAD CASE(S) Standard
1) Regular: Lumber Increase=1.25, Plate Increase=1.25
Uniform Loads (plf)
Vert: 1-2=-54
Trapezoidal Loads (plf)
Vert: 2=-3(F=26, B=26)-to-4=-134(F=-40, B=-40), 2=-0(F=15, B=15)-to-5=-74(F=-22, B=-22)

NOVEMBER 10,2005 TRUSS DESIGN ENGINEER:
THOMAS E. MILLER PE 56877, BYRON K. ANDERSON PE 60987
STRUCTURAL ENGINEERING AND INSPECTIONS, INC. EB 9196
16105 N. FLORIDA AVE. STE B, LUTZ, FL 33549

Job	Truss	Truss Type	Qty	Ply	BRYAN ZECHER-LOT 19 CSF Dwg.#1110051470
L139395	T01	COMMON	5	1	Job Reference (optional)

Builders FirstSource, Lake City, Fl 32055 — 6.200 s Jul 13 2005 MiTek Industries, Inc. Mon Nov 07 15:38:19 2005 Page 1

-2-0-0	4-11-8	10-5-0	15-10-8	20-10-0	22-10-0
2-0-0	4-11-8	5-5-8	5-5-8	4-11-8	2-0-0

Scale = 1:40.7

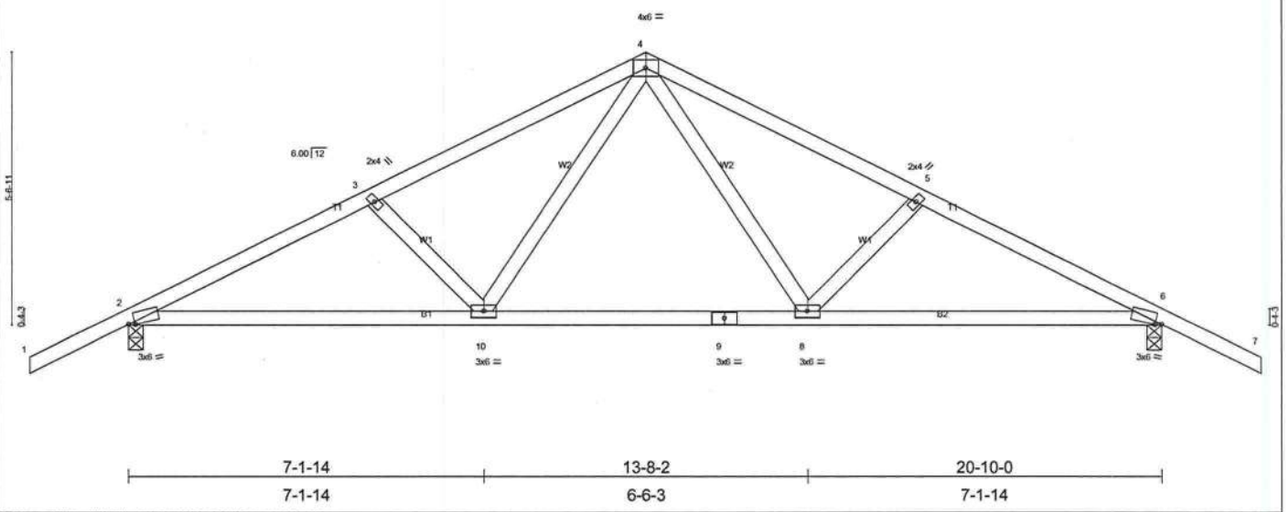

Plate Offsets (X,Y): [2:0-1-9,0-0-7], [6:0-1-9,0-0-7]

LOADING (psf)		SPACING	2-0-0	CSI		DEFL	in	(loc)	l/defl	L/d	PLATES	GRIP
TCLL	20.0	Plates Increase	1.25	TC	0.34	Vert(LL)	-0.18	8-10	>999	240	MT20	244/190
TCDL	7.0	Lumber Increase	1.25	BC	0.75	Vert(TL)	-0.28	8-10	>866	180		
BCLL	10.0	Rep Stress Incr	NO	WB	0.21	Horz(TL)	0.05	6	n/a	n/a		
BCDL	5.0	Code FBC2004/TPI2002		(Matrix)							Weight: 100 lb	

LUMBER
TOP CHORD 2 X 4 SYP No.2
BOT CHORD 2 X 4 SYP No.2
WEBS 2 X 4 SYP No.3

BRACING
TOP CHORD Structural wood sheathing directly applied or 4-7-1 oc purlins.
BOT CHORD Rigid ceiling directly applied or 8-4-10 oc bracing.

REACTIONS (lb/size) 2=1142/0-3-8, 6=1142/0-3-8
Max Horz 2=-111(load case 6)
Max Uplift2=-468(load case 5), 6=-468(load case 6)

FORCES (lb) - Maximum Compression/Maximum Tension
TOP CHORD 1-2=0/47, 2-3=-1830/795, 3-4=-1652/756, 4-5=-1652/756, 5-6=-1830/795, 6-7=0/47
BOT CHORD 2-10=-546/1572, 9-10=-272/1080, 8-9=-272/1080, 6-8=-546/1572
WEBS 3-10=-241/216, 4-10=-239/663, 4-8=-239/663, 5-8=-241/216

NOTES
1) Unbalanced roof live loads have been considered for this design.
2) Wind: ASCE 7-02; 110mph (3-second gust); h=20ft; TCDL=4.2psf; BCDL=3.0psf; Category II; Exp B; enclosed; MWFRS gable end zone and C-C Exterior(2) zone; Lumber DOL=1.60 plate grip DOL=1.60. This truss is designed for C-C for members and forces, and for MWFRS for reactions specified.
3) Provide mechanical connection (by others) of truss to bearing plate capable of withstanding 468 lb uplift at joint 2 and 468 lb uplift at joint 6.
4) In the LOAD CASE(S) section, loads applied to the face of the truss are noted as front (F) or back (B).

LOAD CASE(S) Standard
1) Regular: Lumber Increase=1.25, Plate Increase=1.25
Uniform Loads (plf)
Vert: 1-4=-54, 4-7=-54, 2-10=-30, 8-10=-80(F=-50), 6-8=-30

NOVEMBER 10,2005 TRUSS DESIGN ENGINEER:
THOMAS E. MILLER PE 56877, BYRON K. ANDERSON PE 60987
STRUCTURAL ENGINEERING AND INSPECTIONS, INC. EB 9196
16105 N. FLORIDA AVE. STE B, LUTZ, FL 33549

Job	Truss	Truss Type	Qty	Ply	BRYAN ZECHER-BOT 19 CSE Dwg.#1110051471
L139395	T01H	HIP	1	1	Job Reference (optional)

Builders FirstSource, Lake City, Fl 32055 — 6.200 s Jul 13 2005 MiTek Industries, Inc. Mon Nov 07 15:38:21 2005 Page 1

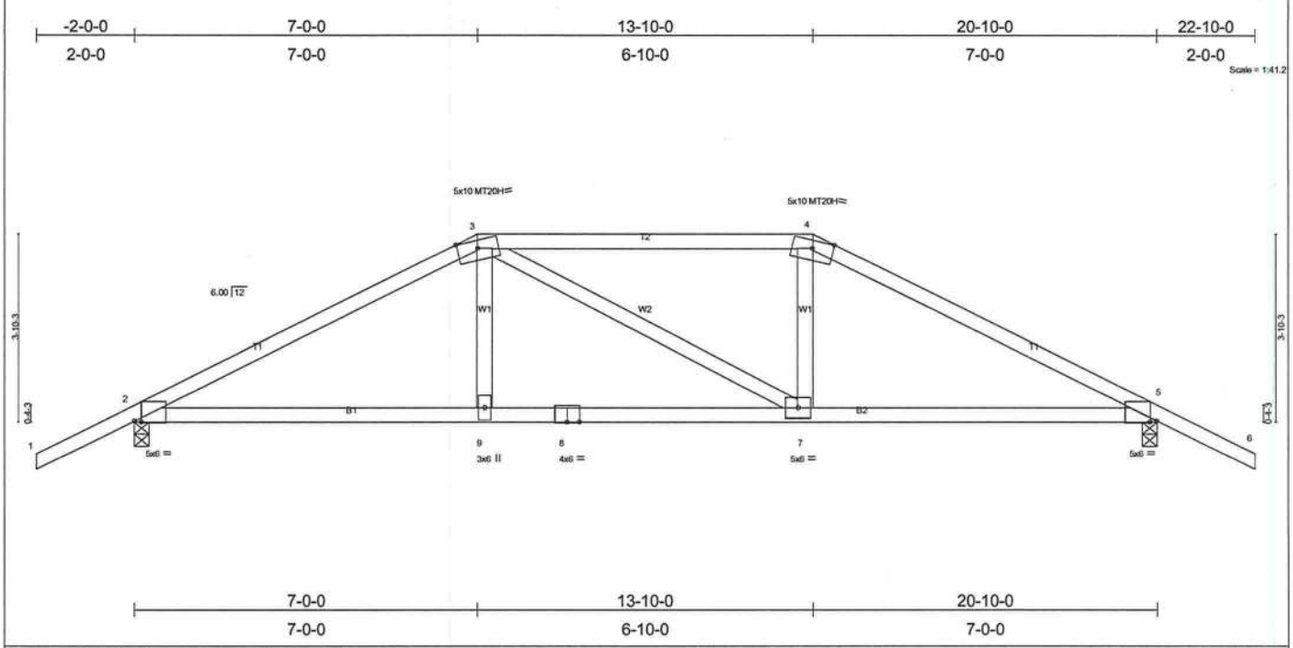

Plate Offsets (X,Y): [2:0-1-11,Edge], [5:0-1-11,Edge]

LOADING (psf)		SPACING	2-0-0	CSI		DEFL	in	(loc)	l/defl	L/d	PLATES	GRIP
TCLL	20.0	Plates Increase	1.25	TC	0.88	Vert(LL)	-0.22	7-9	>999	240	MT20	244/190
TCDL	7.0	Lumber Increase	1.25	BC	0.81	Vert(TL)	-0.36	7-9	>680	180	MT20H	187/143
BCLL	10.0	Rep Stress Incr	NO	WB	0.30	Horz(TL)	0.10	5	n/a	n/a		
BCDL	5.0	Code FBC2004/TPI2002		(Matrix)							Weight: 92 lb	

LUMBER
TOP CHORD 2 X 4 SYP No.2
BOT CHORD 2 X 4 SYP No.2
WEBS 2 X 4 SYP No.3

BRACING
TOP CHORD Structural wood sheathing directly applied or 2-3-9 oc purlins.
BOT CHORD Rigid ceiling directly applied or 5-9-11 oc bracing.

REACTIONS (lb/size) 2=1850/0-3-8, 5=1850/0-3-8
Max Horz 2=-87(load case 5)
Max Uplift2=-836(load case 4), 5=-836(load case 5)

FORCES (lb) - Maximum Compression/Maximum Tension
TOP CHORD 1-2=0/47, 2-3=-3339/1346, 3-4=-2944/1280, 4-5=-3340/1346, 5-6=0/47
BOT CHORD 2-9=-1156/2906, 8-9=-1165/2943, 7-8=-1165/2943, 5-7=-1115/2908
WEBS 3-9=-211/879, 3-7=-126/129, 4-7=-230/926

NOTES
1) Unbalanced roof live loads have been considered for this design.
2) Wind: ASCE 7-02; 110mph (3-second gust); h=20ft; TCDL=4.2psf; BCDL=3.0psf; Category II; Exp B; enclosed; MWFRS gable end zone; Lumber DOL=1.60 plate grip DOL=1.60.
3) Provide adequate drainage to prevent water ponding.
4) All plates are MT20 plates unless otherwise indicated.
5) Provide mechanical connection (by others) of truss to bearing plate capable of withstanding 836 lb uplift at joint 2 and 836 lb uplift at joint 5.
6) Girder carries hip end with 7-0-0 end setback.
7) Hanger(s) or other connection device(s) shall be provided sufficient to support concentrated load(s) 539 lb down and 277 lb up at 13-10-0, and 539 lb down and 277 lb up at 7-0-0 on bottom chord. The design/selection of such connection device(s) is the responsibility of others.
8) In the LOAD CASE(S) section, loads applied to the face of the truss are noted as front (F) or back (B).

LOAD CASE(S) Standard
1) Regular: Lumber Increase=1.25, Plate Increase=1.25
Uniform Loads (plf)
Vert: 1-3=-54, 3-4=-118(F=-64), 4-6=-54, 2-9=-30, 7-9=-65(F=-35), 5-7=-30
Concentrated Loads (lb)
Vert: 9=-539(F) 7=-539(F)

NOVEMBER 10,2005 TRUSS DESIGN ENGINEER:
THOMAS E. MILLER PE 56877, BYRON K. ANDERSON PE 60987
STRUCTURAL ENGINEERING AND INSPECTIONS, INC. EB 9196
16105 N. FLORIDA AVE. STE B, LUTZ, FL 33549

Job	Truss	Truss Type	Qty	Ply	BRYAN ZECHER-LOT 19 CSF Dwg.#1110051472	J1323699
L139395	T02	HIP	1	1	Job Reference (optional)	

Builders FirstSource, Lake City, Fl 32055 — 6.200 s Jul 13 2005 MiTek Industries, Inc. Mon Nov 07 15:38:21 2005 Page 1

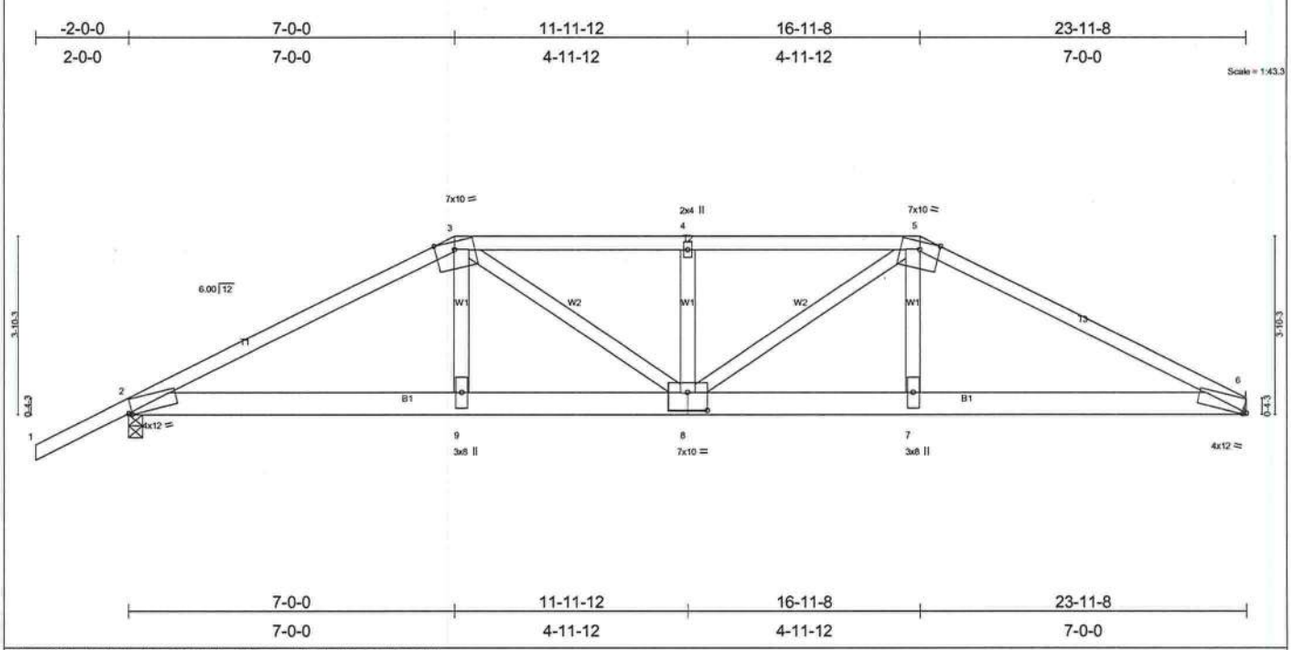

Plate Offsets (X,Y): [2:0-0-13,Edge], [6:0-0-13,Edge], [8:0-5-0,0-4-8]

LOADING (psf)		SPACING	2-0-0	CSI		DEFL	in	(loc)	l/defl	L/d	PLATES	GRIP
TCLL	20.0	Plates Increase	1.25	TC	0.78	Vert(LL)	-0.22	8-9	>999	240	MT20	244/190
TCDL	7.0	Lumber Increase	1.25	BC	0.90	Vert(TL)	-0.35	8-9	>805	180		
BCLL	10.0	Rep Stress Incr	NO	WB	0.43	Horz(TL)	0.09	6	n/a	n/a		
BCDL	5.0	Code FBC2004/TPI2002		(Matrix)							Weight: 128 lb	

LUMBER
TOP CHORD 2 X 4 SYP No.2
BOT CHORD 2 X 6 SYP No.1D
WEBS 2 X 4 SYP No.3

BRACING
TOP CHORD Structural wood sheathing directly applied or 2-3-10 oc purlins.
BOT CHORD Rigid ceiling directly applied or 6-3-14 oc bracing.

REACTIONS (lb/size) 6=2649/Mechanical, 2=2274/0-3-8
Max Horz 2=116(load case 4)
Max Uplift6=-1059(load case 5), 2=-1000(load case 4)

FORCES (lb) - Maximum Compression/Maximum Tension
TOP CHORD 1-2=0/51, 2-3=-4281/1738, 3-4=-4557/1950, 4-5=-4557/1950, 5-6=-4755/1925
BOT CHORD 2-9=-1545/3750, 8-9=-1554/3786, 7-8=-1675/4248, 6-7=-1658/4192
WEBS 3-9=-238/857, 3-8=-514/1050, 4-8=-602/521, 5-8=-298/509, 5-7=-439/1347

NOTES
1) Unbalanced roof live loads have been considered for this design.
2) Wind: ASCE 7-02; 110mph (3-second gust); h=20ft; TCDL=4.2psf; BCDL=3.0psf; Category II; Exp B; enclosed; MWFRS gable end zone; Lumber DOL=1.60 plate grip DOL=1.60.
3) Provide adequate drainage to prevent water ponding.
4) Refer to girder(s) for truss to truss connections.
5) Provide mechanical connection (by others) of truss to bearing plate capable of withstanding 1059 lb uplift at joint 6 and 1000 lb uplift at joint 2.
6) Girder carries tie-in span(s): 7-0-0 from 16-11-8 to 23-11-8
7) Girder carries hip end with 7-0-0 end setback.
8) Hanger(s) or other connection device(s) shall be provided sufficient to support concentrated load(s) 539 lb down and 277 lb up at 16-11-8, and 539 lb down and 277 lb up at 7-0-0 on bottom chord. The design/selection of such connection device(s) is the responsibility of others.
9) In the LOAD CASE(S) section, loads applied to the face of the truss are noted as front (F) or back (B).

LOAD CASE(S) Standard
1) Regular: Lumber Increase=1.25, Plate Increase=1.25
Uniform Loads (plf)
Vert: 1-3=-54, 3-5=-120(F=-66), 5-6=-54, 2-9=-30, 7-9=-67(F=-37), 6-7=-132(F=-102)
Concentrated Loads (lb)
Vert: 9=-539(F) 7=-539(F)

NOVEMBER 10,2005 TRUSS DESIGN ENGINEER:
THOMAS E. MILLER PE 56877, BYRON K. ANDERSON PE 60987
STRUCTURAL ENGINEERING AND INSPECTIONS, INC. EB 9196
16105 N. FLORIDA AVE. STE B, LUTZ, FL 33549

Job	Truss	Truss Type	Qty	Ply	BRYAN ZECHER-LOT 19 CSF Dwg.#1110051473
L139395	T02H	HIP	1	1	Job Reference (optional)

Builders FirstSource, Lake City, Fl 32055 — 6.200 s Jul 13 2005 MiTek Industries, Inc. Mon Nov 07 15:38:22 2005 Page 1

-2-0-0	4-9-4	9-0-0	11-10-0	16-0-12	20-10-0	22-10-0
2-0-0	4-9-4	4-2-12	2-10-0	4-2-12	4-9-4	2-0-0

Scale = 1:41.2

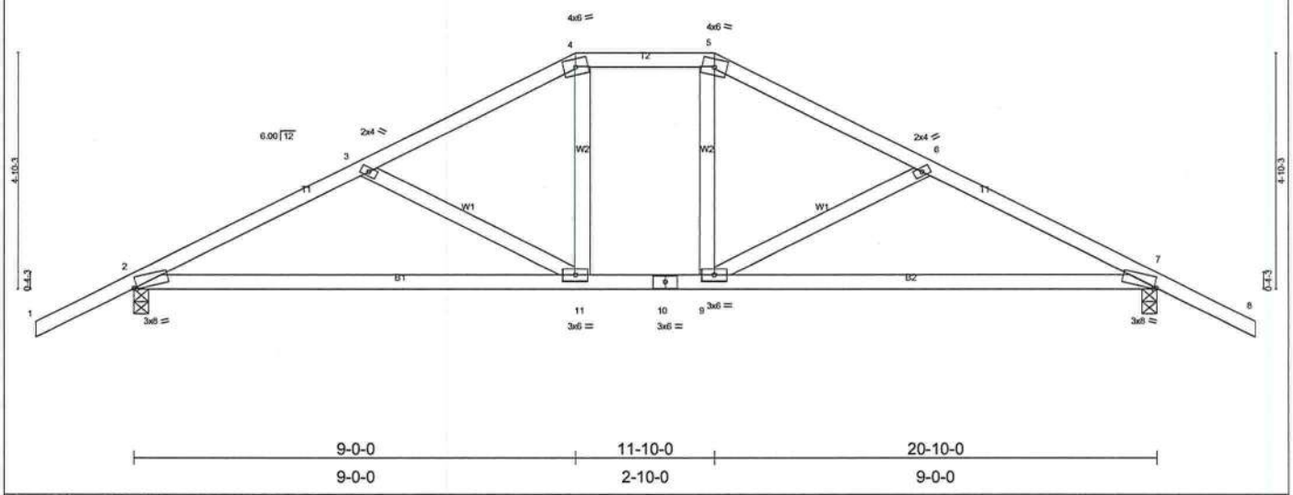

9-0-0	11-10-0	20-10-0
9-0-0	2-10-0	9-0-0

Plate Offsets (X,Y): [2:0-0-10,Edge], [7:0-0-10,Edge]

LOADING (psf)		SPACING	2-0-0	CSI		DEFL	in	(loc)	l/defl	L/d	PLATES	GRIP
TCLL	20.0	Plates Increase	1.25	TC	0.29	Vert(LL)	-0.20	7-9	>999	240	MT20	244/190
TCDL	7.0	Lumber Increase	1.25	BC	0.53	Vert(TL)	-0.32	7-9	>767	180		
BCLL	10.0	Rep Stress Incr	YES	WB	0.14	Horz(TL)	0.04	7	n/a	n/a		
BCDL	5.0	Code FBC2004/TPI2002		(Matrix)							Weight: 99 lb	

LUMBER
TOP CHORD 2 X 4 SYP No.2
BOT CHORD 2 X 4 SYP No.2
WEBS 2 X 4 SYP No.3

BRACING
TOP CHORD Structural wood sheathing directly applied or 5-0-6 oc purlins.
BOT CHORD Rigid ceiling directly applied or 10-0-0 oc bracing.

REACTIONS (lb/size) 2=979/0-3-8, 7=979/0-3-8
Max Horz 2=-101(load case 6)
Max Uplift2=-398(load case 5), 7=-398(load case 6)

FORCES (lb) - Maximum Compression/Maximum Tension
TOP CHORD 1-2=0/47, 2-3=-1403/594, 3-4=-1140/479, 4-5=-976/479, 5-6=-1140/479, 6-7=-1403/594, 7-8=0/47
BOT CHORD 2-11=-369/1216, 10-11=-170/976, 9-10=-170/976, 7-9=-369/1216
WEBS 3-11=-315/226, 4-11=-62/302, 5-9=-62/302, 6-9=-315/226

NOTES
1) Unbalanced roof live loads have been considered for this design.
2) Wind: ASCE 7-02; 110mph (3-second gust); h=20ft; TCDL=4.2psf; BCDL=3.0psf; Category II; Exp B; enclosed; MWFRS gable end zone and C-C Exterior(2) zone; Lumber DOL=1.60 plate grip DOL=1.60. This truss is designed for C-C for members and forces, and for MWFRS for reactions specified.
3) Provide adequate drainage to prevent water ponding.
4) Provide mechanical connection (by others) of truss to bearing plate capable of withstanding 398 lb uplift at joint 2 and 398 lb uplift at joint 7.

LOAD CASE(S) Standard

NOVEMBER 10,2005 TRUSS DESIGN ENGINEER:
THOMAS E. MILLER PE 56877, BYRON K. ANDERSON PE 60987
STRUCTURAL ENGINEERING AND INSPECTIONS, INC. EB 9196
16105 N. FLORIDA AVE. STE B, LUTZ, FL 33549

Job	Truss	Truss Type	Qty	Ply	BRYAN ZECHER-LOT 19 CSE Dwg.#1110051474
L139395	T03	HIP	1	1	Job Reference (optional)

Builders FirstSource, Lake City, Fl 32055 — 6.200 s Jul 13 2005 MiTek Industries, Inc. Mon Nov 07 15:38:23 2005 Page 1

-2-0-0	4-9-4	9-0-0	14-11-8	19-2-4	23-11-8
2-0-0	4-9-4	4-2-12	5-11-8	4-2-12	4-9-4

Scale = 1:43.5

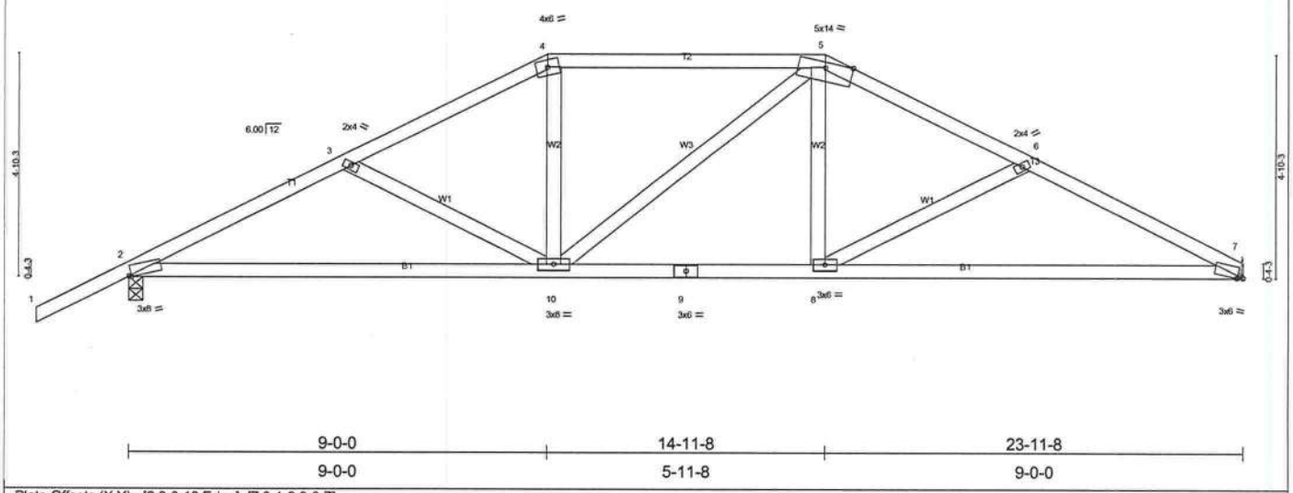

9-0-0	14-11-8	23-11-8
9-0-0	5-11-8	9-0-0

Plate Offsets (X,Y): [2:0-0-10,Edge], [7:0-1-9,0-0-7]

LOADING (psf)		SPACING	2-0-0	CSI		DEFL	in	(loc)	l/defl	L/d	PLATES	GRIP
TCLL	20.0	Plates Increase	1.25	TC	0.34	Vert(LL)	-0.21	7-8	>999	240	MT20	244/190
TCDL	7.0	Lumber Increase	1.25	BC	0.52	Vert(TL)	-0.36	7-8	>794	180		
BCLL	10.0	Rep Stress Incr	YES	WB	0.13	Horz(TL)	0.06	7	n/a	n/a		
BCDL	5.0	Code FBC2004/TPI2002		(Matrix)							Weight: 115 lb	

LUMBER
TOP CHORD 2 X 4 SYP No.2
BOT CHORD 2 X 4 SYP No.2
WEBS 2 X 4 SYP No.3

BRACING
TOP CHORD Structural wood sheathing directly applied or 4-3-10 oc purlins.
BOT CHORD Rigid ceiling directly applied or 7-10-7 oc bracing.

REACTIONS (lb/size) 7=992/Mechanical, 2=1119/0-3-8
Max Horz 2=126(load case 5)
Max Uplift7=-304(load case 6), 2=-432(load case 5)

FORCES (lb) - Maximum Compression/Maximum Tension
TOP CHORD 1-2=0/47, 2-3=-1693/721, 3-4=-1451/619, 4-5=-1265/609, 5-6=-1469/642, 6-7=-1741/778
BOT CHORD 2-10=-557/1470, 9-10=-395/1279, 8-9=-395/1279, 7-8=-625/1527
WEBS 3-10=-244/203, 4-10=-51/338, 5-10=-127/103, 5-8=-87/365, 6-8=-293/262

NOTES
1) Unbalanced roof live loads have been considered for this design.
2) Wind: ASCE 7-02; 110mph (3-second gust); h=20ft; TCDL=4.2psf; BCDL=3.0psf; Category II; Exp B; enclosed; MWFRS gable end zone and C-C Exterior(2) zone; Lumber DOL=1.60 plate grip DOL=1.60. This truss is designed for C-C for members and forces, and for MWFRS for reactions specified.
3) Provide adequate drainage to prevent water ponding.
4) Refer to girder(s) for truss to truss connections.
5) Provide mechanical connection (by others) of truss to bearing plate capable of withstanding 304 lb uplift at joint 7 and 432 lb uplift at joint 2.

LOAD CASE(S) Standard

NOVEMBER 10,2005 TRUSS DESIGN ENGINEER:
THOMAS E. MILLER PE 56877, BYRON K. ANDERSON PE 60987
STRUCTURAL ENGINEERING AND INSPECTIONS, INC. EB 9196
16105 N. FLORIDA AVE. STE B, LUTZ, FL 33549

Job	Truss	Truss Type	Qty	Ply	BRYAN ZECHER-FST 19 CSE Dwg.#1110051475
L139395	T04	HIP	1	1	Job Reference (optional)

Builders FirstSource, Lake City, Fl 32055

6.200 s Jul 13 2005 MiTek Industries, Inc. Mon Nov 07 15:38:24 2005 Page 1

-2-0-0	5-9-14	11-0-0	12-11-8	18-1-10	23-11-8
2-0-0	5-9-14	5-2-2	1-11-8	5-2-2	5-9-14

Scale = 1:43.4

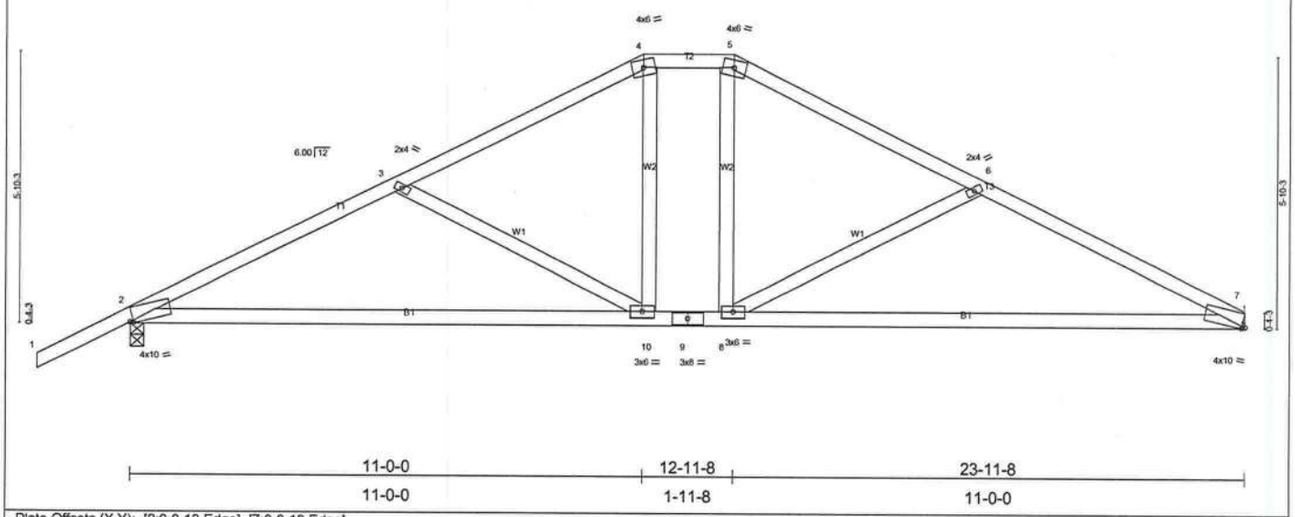

11-0-0	12-11-8	23-11-8
11-0-0	1-11-8	11-0-0

Plate Offsets (X,Y): [2:0-0-13,Edge], [7:0-0-13,Edge]

LOADING (psf)		SPACING	2-0-0	CSI		DEFL	in	(loc)	l/defl	L/d	PLATES	GRIP
TCLL	20.0	Plates Increase	1.25	TC	0.48	Vert(LL)	-0.42	7-8	>679	240	MT20	244/190
TCDL	7.0	Lumber Increase	1.25	BC	0.80	Vert(TL)	-0.68	7-8	>420	180		
BCLL	10.0	Rep Stress Incr	YES	WB	0.29	Horz(TL)	0.06	7	n/a	n/a		
BCDL	5.0	Code FBC2004/TPI2002		(Matrix)							Weight: 112 lb	

LUMBER
TOP CHORD 2 X 4 SYP No.2
BOT CHORD 2 X 4 SYP No.2
WEBS 2 X 4 SYP No.3

BRACING
TOP CHORD Structural wood sheathing directly applied or 4-0-10 oc purlins.
BOT CHORD Rigid ceiling directly applied or 7-10-9 oc bracing.

REACTIONS (lb/size) 7=992/Mechanical, 2=1119/0-3-8
Max Horz 2=140(load case 5)
Max Uplift7=-317(load case 6), 2=-446(load case 5)

FORCES (lb) - Maximum Compression/Maximum Tension
TOP CHORD 1-2=0/47, 2-3=-1643/735, 3-4=-1309/583, 4-5=-1115/583, 5-6=-1313/589, 6-7=-1677/775
BOT CHORD 2-10=-561/1427, 9-10=-301/1115, 8-9=-301/1115, 7-8=-612/1469
WEBS 3-10=-396/296, 4-10=-85/359, 5-8=-142/403, 6-8=-440/355

NOTES
1) Unbalanced roof live loads have been considered for this design.
2) Wind: ASCE 7-02; 110mph (3-second gust); h=20ft; TCDL=4.2psf; BCDL=3.0psf; Category II; Exp B; enclosed; MWFRS gable end zone and C-C Exterior(2) zone; Lumber DOL=1.60 plate grip DOL=1.60. This truss is designed for C-C for members and forces, and for MWFRS for reactions specified.
3) Provide adequate drainage to prevent water ponding.
4) Refer to girder(s) for truss to truss connections.
5) Provide mechanical connection (by others) of truss to bearing plate capable of withstanding 317 lb uplift at joint 7 and 446 lb uplift at joint 2.

LOAD CASE(S) Standard

NOVEMBER 10,2005 TRUSS DESIGN ENGINEER:
THOMAS E. MILLER PE 56877, BYRON K. ANDERSON PE 60987
STRUCTURAL ENGINEERING AND INSPECTIONS, INC. EB 9196
16105 N. FLORIDA AVE. STE B, LUTZ, FL 33549

Job	Truss	Truss Type	Qty	Ply	BRYAN ZECHER-HST 19 CSE
L139395	T05	MONO HIP	1	1	Job Reference (optional)

Dwg.#1110051476

Builders FirstSource, Lake City, Fl 32055 — 6.200 s Jul 13 2005 MiTek Industries, Inc. Mon Nov 07 15:38:25 2005 Page 1

-2-0-0	7-0-0	10-11-10	16-3-4	21-6-14	25-6-8
2-0-0	7-0-0	3-11-10	5-3-9	5-3-11	3-11-10

Scale = 1:46.5

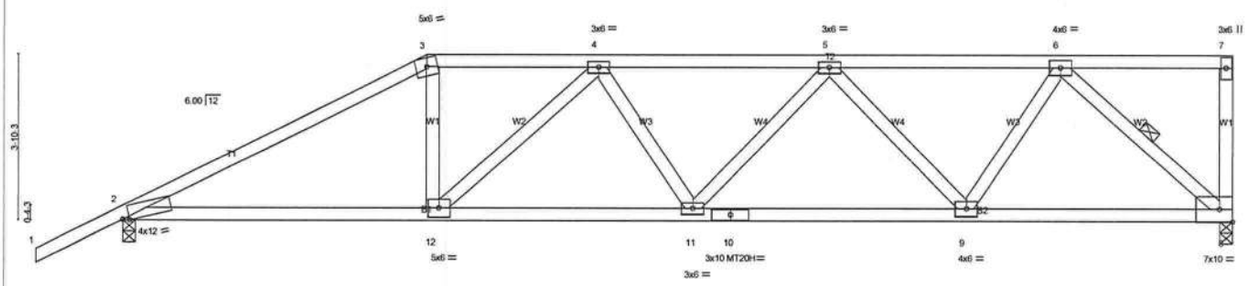

7-0-0	13-1-10	19-4-14	25-6-8
7-0-0	6-1-10	6-3-4	6-1-10

Plate Offsets (X,Y): [2:0-1-13,Edge]

LOADING (psf)		SPACING	2-0-0	CSI		DEFL	in	(loc)	l/defl	L/d	PLATES	GRIP
TCLL	20.0	Plates Increase	1.25	TC	0.67	Vert(LL)	-0.25	11-12	>999	240	MT20	244/190
TCDL	7.0	Lumber Increase	1.25	BC	0.80	Vert(TL)	-0.41	11-12	>744	180	MT20H	187/143
BCLL	10.0	Rep Stress Incr	NO	WB	0.58	Horz(TL)	0.13	8	n/a	n/a		
BCDL	5.0	Code FBC2004/TPI2002		(Matrix)							Weight: 130 lb	

LUMBER
TOP CHORD 2 X 4 SYP No.2
BOT CHORD 2 X 4 SYP No.1D
WEBS 2 X 4 SYP No.3

BRACING
TOP CHORD Structural wood sheathing directly applied or 2-7-9 oc purlins, except end verticals.
BOT CHORD Rigid ceiling directly applied or 4-10-3 oc bracing.
WEBS 1 Row at midpt 6-8

REACTIONS (lb/size) 8=2360/0-3-8, 2=2230/0-3-8
Max Horz 2=227(load case 4)
Max Uplift8=-1062(load case 3), 2=-964(load case 4)

FORCES (lb) - Maximum Compression/Maximum Tension
TOP CHORD 1-2=0/47, 2-3=-4117/1726, 3-4=-3643/1595, 4-5=-4276/1865, 5-6=-3063/1321, 6-7=-71/13, 7-8=-200/148
BOT CHORD 2-12=-1573/3585, 11-12=-1940/4247, 10-11=-1827/3961, 9-10=-1827/3961, 8-9=-1027/2193
WEBS 3-12=-567/1418, 4-12=-824/531, 4-11=0/162, 5-11=-78/475, 5-9=-1357/765, 6-9=-565/1673, 6-8=-2897/1384

NOTES
1) Wind: ASCE 7-02; 110mph (3-second gust); h=20ft; TCDL=4.2psf; BCDL=3.0psf; Category II; Exp B; enclosed; MWFRS gable end zone; Lumber DOL=1.60 plate grip DOL=1.60.
2) Provide adequate drainage to prevent water ponding.
3) All plates are MT20 plates unless otherwise indicated.
4) Provide mechanical connection (by others) of truss to bearing plate capable of withstanding 1062 lb uplift at joint 8 and 964 lb uplift at joint 2.
5) Girder carries hip end with 0-0-0 right side setback, 7-0-0 left side setback, and 7-0-0 end setback.
6) Hanger(s) or other connection device(s) shall be provided sufficient to support concentrated load(s) 539 lb down and 277 lb up at 7-0-0 on bottom chord. The design/selection of such connection device(s) is the responsibility of others.
7) In the LOAD CASE(S) section, loads applied to the face of the truss are noted as front (F) or back (B).

LOAD CASE(S) Standard
1) Regular: Lumber Increase=1.25, Plate Increase=1.25
Uniform Loads (plf)
Vert: 1-3=-54, 3-7=-118(F=-64), 2-12=-30, 8-12=-65(F=-35)
Concentrated Loads (lb)
Vert: 12=-539(F)

NOVEMBER 10,2005 TRUSS DESIGN ENGINEER:
THOMAS E. MILLER PE 56877, BYRON K. ANDERSON PE 60987
STRUCTURAL ENGINEERING AND INSPECTIONS, INC. EB 9196
16105 N. FLORIDA AVE. STE B, LUTZ, FL 33549

Job	Truss	Truss Type	Qty	Ply	BRYAN ZECHER-LOT 19 CSF Dwg.#1110051477	J1323703
L139395	T06	SPECIAL	1	1	Job Reference (optional)	

Builders FirstSource, Lake City, Fl 32055 — 6.200 s Jul 13 2005 MiTek Industries, Inc. Mon Nov 07 15:38:25 2005 Page 1

-2-0-0	4-7-15	9-0-0	13-4-12	19-11-5	25-4-12	25-6-8
2-0-0	4-7-15	4-4-1	4-4-12	6-6-10	5-5-7	0-1-12

Scale = 1:46.5

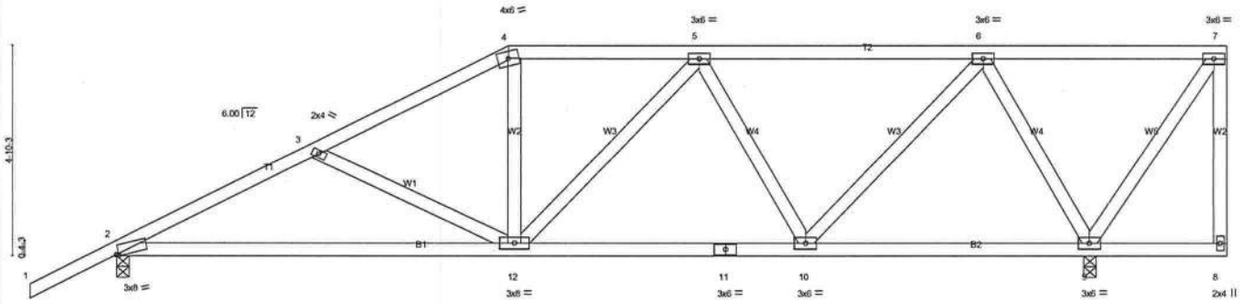

9-0-0	15-10-2	22-4-11	25-4-12	25-6-8
9-0-0	6-10-2	6-6-9	3-0-2	0-1-12

Plate Offsets (X,Y): [2:0-0-10,Edge]

LOADING (psf)		SPACING	2-0-0	CSI		DEFL	in	(loc)	l/defl	L/d	PLATES	GRIP
TCLL	20.0	Plates Increase	1.25	TC	0.34	Vert(LL)	-0.15	2-12	>999	240	MT20	244/190
TCDL	7.0	Lumber Increase	1.25	BC	0.55	Vert(TL)	-0.26	2-12	>999	180		
BCLL	10.0	Rep Stress Incr	NO	WB	0.50	Horz(TL)	0.03	9	n/a	n/a		
BCDL	5.0	Code FBC2004/TPI2002		(Matrix)							Weight: 141 lb	

LUMBER
TOP CHORD 2 X 4 SYP No.2
BOT CHORD 2 X 4 SYP No.2
WEBS 2 X 4 SYP No.3

BRACING
TOP CHORD Structural wood sheathing directly applied or 4-10-6 oc purlins, except end verticals.
BOT CHORD Rigid ceiling directly applied or 7-8-13 oc bracing.

REACTIONS (lb/size) 2=1027/0-3-8, 9=1294/0-3-8
Max Horz 2=272(load case 5)
Max Uplift2=-395(load case 5), 9=-551(load case 4)

FORCES (lb) - Maximum Compression/Maximum Tension
TOP CHORD 1-2=0/47, 2-3=-1514/561, 3-4=-1253/444, 4-5=-1079/449, 5-6=-838/300, 6-7=-121/133, 7-8=-92/48
BOT CHORD 2-12=-650/1314, 11-12=-426/1029, 10-11=-426/1029, 9-10=-125/350, 8-9=-17/15
WEBS 3-12=-274/224, 4-12=-29/317, 5-12=-48/101, 5-10=-404/268, 6-10=-265/729, 6-9=-1020/515, 7-9=-268/250

NOTES
1) Wind: ASCE 7-02; 110mph (3-second gust); h=20ft; TCDL=4.2psf; BCDL=3.0psf; Category II; Exp B; enclosed; MWFRS gable end zone and C-C Exterior(2) zone; cantilever right exposed ; Lumber DOL=1.60 plate grip DOL=1.60. This truss is designed for C-C for members and forces, and for MWFRS for reactions specified.
2) Provide adequate drainage to prevent water ponding.
3) Provide mechanical connection (by others) of truss to bearing plate capable of withstanding 395 lb uplift at joint 2 and 551 lb uplift at joint 9.
4) Hanger(s) or other connection device(s) shall be provided sufficient to support concentrated load(s) 54 lb down and 28 lb up at 25-4-12 on top chord, and 30 lb down and 16 lb up at 25-4-12 on bottom chord. The design/selection of such connection device(s) is the responsibility of others.
5) In the LOAD CASE(S) section, loads applied to the face of the truss are noted as front (F) or back (B).

LOAD CASE(S) Standard
1) Regular: Lumber Increase=1.25, Plate Increase=1.25
Uniform Loads (plf)
Vert: 1-4=-54, 4-7=-54, 2-8=-30
Concentrated Loads (lb)
Vert: 8=-30(F) 7=-54(F)

NOVEMBER 10,2005 TRUSS DESIGN ENGINEER:
THOMAS E. MILLER PE 56877, BYRON K. ANDERSON PE 60987
STRUCTURAL ENGINEERING AND INSPECTIONS, INC. EB 9196
16105 N. FLORIDA AVE. STE B, LUTZ, FL 33549

Job	Truss	Truss Type	Qty	Ply	BRYAN ZECHER-LOT 19 CSF	
L139395	T07	HIP	1	1	Dwg.#1110051478 Job Reference (optional)	J1323704

Builders FirstSource, Lake City, Fl 32055 — 6.200 s Jul 13 2005 MiTek Industries, Inc. Mon Nov 07 15:38:26 2005 Page 1

-2-0-0	5-9-15	11-0-0	16-0-0	21-4-7	25-4-12	25-6-8
2-0-0	5-9-15	5-2-1	5-0-0	5-4-7	4-0-6	0-1-12

Scale = 1:46.5

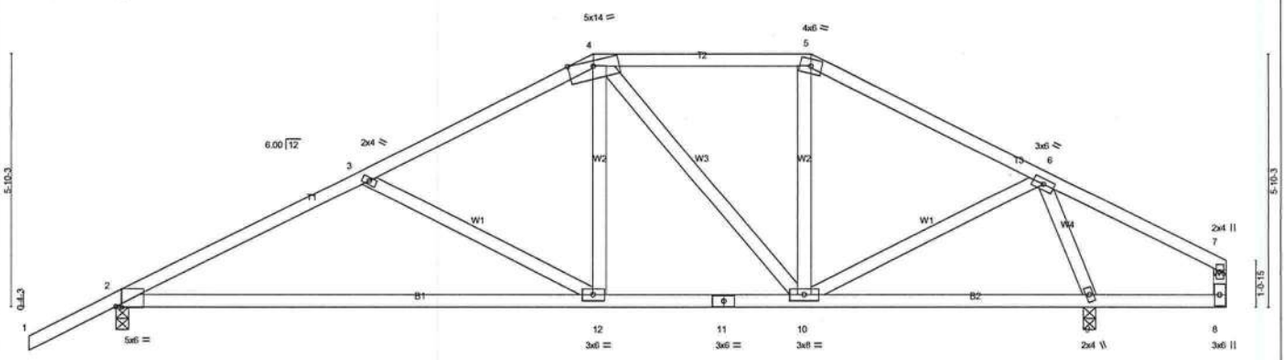

5-9-15	11-0-0	16-0-0	22-4-12	25-4-12	25-6-8
5-9-15	5-2-1	5-0-0	6-4-12	3-0-0	0-1-12

Plate Offsets (X,Y): [2:0-1-11,Edge]

LOADING (psf)		SPACING	2-0-0	CSI		DEFL	in	(loc)	l/defl	L/d	PLATES	GRIP
TCLL	20.0	Plates Increase	1.25	TC	0.49	Vert(LL)	-0.33	2-12	>823	240	MT20	244/190
TCDL	7.0	Lumber Increase	1.25	BC	0.71	Vert(TL)	-0.56	2-12	>476	180		
BCLL	10.0	Rep Stress Incr	NO	WB	0.35	Horz(TL)	0.03	9	n/a	n/a		
BCDL	5.0	Code FBC2004/TPI2002		(Matrix)							Weight: 132 lb	

LUMBER
TOP CHORD 2 X 4 SYP No.2
BOT CHORD 2 X 4 SYP No.2
WEBS 2 X 4 SYP No.3

BRACING
TOP CHORD Structural wood sheathing directly applied or 4-7-7 oc purlins, except end verticals.
BOT CHORD Rigid ceiling directly applied or 6-0-0 oc bracing.

REACTIONS (lb/size) 2=1031/0-3-8, 9=1290/0-3-8
Max Horz 2=167(load case 5)
Max Uplift2=-422(load case 5), 9=-478(load case 6)

FORCES (lb) - Maximum Compression/Maximum Tension
TOP CHORD 1-2=0/47, 2-3=-1448/621, 3-4=-1114/468, 4-5=-724/401, 5-6=-874/389, 6-7=-218/287, 7-8=-25/16
BOT CHORD 2-12=-502/1255, 11-12=-240/944, 10-11=-240/944, 9-10=-45/208, 8-9=-196/219
WEBS 3-12=-364/298, 4-12=-82/458, 4-10=-389/119, 5-10=-12/146, 6-10=-167/580, 6-9=-1106/641

NOTES
1) Unbalanced roof live loads have been considered for this design.
2) Wind: ASCE 7-02; 110mph (3-second gust); h=20ft; TCDL=4.2psf; BCDL=3.0psf; Category II; Exp B; enclosed; MWFRS gable end zone and C-C Exterior(2) zone; cantilever right exposed ; Lumber DOL=1.60 plate grip DOL=1.60. This truss is designed for C-C for members and forces, and for MWFRS for reactions specified.
3) Provide adequate drainage to prevent water ponding.
4) Provide mechanical connection (by others) of truss to bearing plate capable of withstanding 422 lb uplift at joint 2 and 478 lb uplift at joint 9.
5) Hanger(s) or other connection device(s) shall be provided sufficient to support concentrated load(s) 54 lb down and 28 lb up at 25-4-12 on top chord, and 30 lb down and 16 lb up at 25-4-12 on bottom chord. The design/selection of such connection device(s) is the responsibility of others.
6) In the LOAD CASE(S) section, loads applied to the face of the truss are noted as front (F) or back (B).

LOAD CASE(S) Standard
1) Regular: Lumber Increase=1.25, Plate Increase=1.25
Uniform Loads (plf)
Vert: 1-4=-54, 4-5=-54, 5-7=-54, 2-8=-30
Concentrated Loads (lb)
Vert: 7=-54(F) 8=-30(F)

NOVEMBER 10,2005 TRUSS DESIGN ENGINEER:
THOMAS E. MILLER PE 56877, BYRON K. ANDERSON PE 60987
STRUCTURAL ENGINEERING AND INSPECTIONS, INC. EB 9196
16105 N. FLORIDA AVE. STE B, LUTZ, FL 33549

Job	Truss	Truss Type	Qty	Ply	BRYAN ZECHER-LOT 19 CSF Dwg.#1110051479	J1323705
L139395	T08	SPECIAL	1	1	Job Reference (optional)	

Builders FirstSource, Lake City, Fl 32055 — 6.200 s Jul 13 2005 MiTek Industries, Inc. Mon Nov 07 15:38:27 2005 Page 1

-2-0-0	6-10-15	13-0-0	14-0-0	19-7-8	25-4-12	25-6-8
2-0-0	6-10-15	6-1-1	1-0-0	5-7-8	5-9-4	0-1-12

Scale = 1:47.5

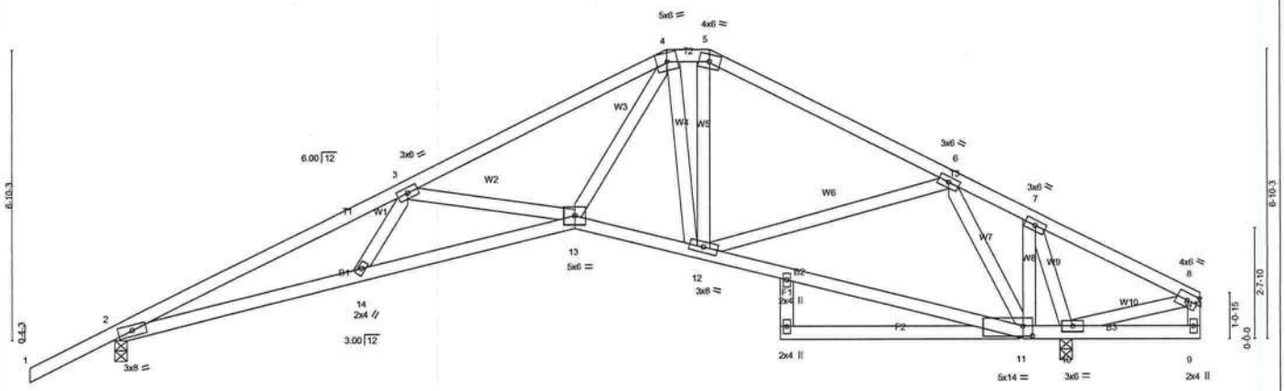

5-9-15	10-10-0	14-0-0	15-8-0	17-10-5	21-4-8	22-4-12	25-4-12	25-6-8
5-9-15	5-0-1	3-2-0	1-8-0	2-2-5	3-6-3	1-0-4	3-0-0	0-1-12

Plate Offsets (X,Y): [11:0-2-12,0-2-12]

LOADING (psf)		SPACING	2-0-0	CSI		DEFL	in	(loc)	l/defl	L/d	PLATES	GRIP
TCLL	20.0	Plates Increase	1.25	TC	0.43	Vert(LL)	-0.20	13-14	>999	240	MT20	244/190
TCDL	7.0	Lumber Increase	1.25	BC	0.67	Vert(TL)	-0.32	13-14	>847	180		
BCLL	10.0	Rep Stress Incr	NO	WB	0.39	Horz(TL)	0.18	10	n/a	n/a		
BCDL	5.0	Code FBC2004/TPI2002		(Matrix)							Weight: 151 lb	

LUMBER
TOP CHORD 2 X 4 SYP No.2
BOT CHORD 2 X 4 SYP No.2
WEBS 2 X 4 SYP No.3

BRACING
TOP CHORD Structural wood sheathing directly applied or 3-4-11 oc purlins, except end verticals.
BOT CHORD Rigid ceiling directly applied or 6-7-3 oc bracing.

REACTIONS (lb/size) 2=1030/0-3-8, 10=1291/0-3-8
Max Horz 2=180(load case 5)
Max Uplift2=-431(load case 5), 10=-501(load case 6)

FORCES (lb) - Maximum Compression/Maximum Tension
TOP CHORD 1-2=0/46, 2-3=-2839/1028, 3-4=-1966/757, 4-5=-1023/512, 5-6=-1198/498, 6-7=-223/93, 7-8=-207/328, 8-9=-67/63
BOT CHORD 2-14=-882/2543, 13-14=-912/2416, 12-13=-260/1128, 11-12=-141/595, 10-11=-2/143, 9-10=-91/77
WEBS 3-14=0/237, 3-13=-670/441, 4-13=-412/1231, 4-12=-490/214, 5-12=-124/412, 6-12=-95/485, 7-10=-1247/491, 7-11=-259/831, 6-11=-857/447, 8-10=-343/334

NOTES
1) Unbalanced roof live loads have been considered for this design.
2) Wind: ASCE 7-02; 110mph (3-second gust); h=20ft; TCDL=4.2psf; BCDL=3.0psf; Category II; Exp B; enclosed; MWFRS gable end zone and C-C Exterior(2) zone; cantilever right exposed ; Lumber DOL=1.60 plate grip DOL=1.60. This truss is designed for C-C for members and forces, and for MWFRS for reactions specified.
3) Provide adequate drainage to prevent water ponding.
4) Bearing at joint(s) 2 considers parallel to grain value using ANSI/TPI 1 angle to grain formula. Building designer should verify capacity of bearing surface.
5) Provide mechanical connection (by others) of truss to bearing plate capable of withstanding 431 lb uplift at joint 2 and 501 lb uplift at joint 10.
6) Hanger(s) or other connection device(s) shall be provided sufficient to support concentrated load(s) 54 lb down and 28 lb up at 25-4-12 on top chord, and 30 lb down and 16 lb up at 25-4-12 on bottom chord. The design/selection of such connection device(s) is the responsibility of others.
7) In the LOAD CASE(S) section, loads applied to the face of the truss are noted as front (F) or back (B).

LOAD CASE(S) Standard
1) Regular: Lumber Increase=1.25, Plate Increase=1.25
Uniform Loads (plf)
Vert: 1-4=-54, 4-5=-54, 5-8=-54, 2-13=-30, 11-13=-30, 9-11=-30
Concentrated Loads (lb)
Vert: 9=-30(F) 8=-54(F)

NOVEMBER 10,2005 TRUSS DESIGN ENGINEER:
THOMAS E. MILLER PE 56877, BYRON K. ANDERSON PE 60987
STRUCTURAL ENGINEERING AND INSPECTIONS, INC. EB 9196
16105 N. FLORIDA AVE. STE B, LUTZ, FL 33549

Job	Truss	Truss Type	Qty	Ply	BRYAN ZECHER-LOT 19 CSE Dwg.#1110051480
L139395	T09	SPECIAL	1	1	Job Reference (optional)

Builders FirstSource, Lake City, Fl 32055 — 6.200 s Jul 13 2005 MiTek Industries, Inc. Mon Nov 07 15:38:28 2005 Page 1

-2-0-0	7-1-15	13-6-0	21-4-8	25-6-8
2-0-0	7-1-15	6-4-1	7-10-8	4-2-0

Scale = 1:47.0

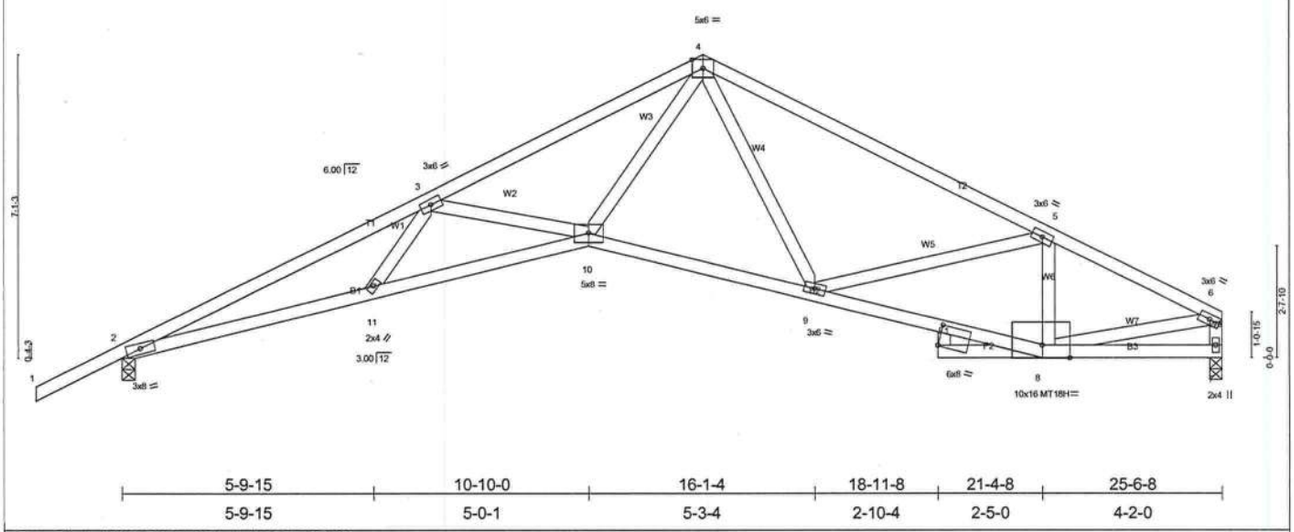

5-9-15	10-10-0	16-1-4	18-11-8	21-4-8	25-6-8
5-9-15	5-0-1	5-3-4	2-10-4	2-5-0	4-2-0

Plate Offsets (X,Y): [8:0-7-12,Edge], [12:0-0-2,0-5-13]

LOADING (psf)		SPACING	2-0-0	CSI		DEFL	in	(loc)	l/defl	L/d	PLATES	GRIP
TCLL	20.0	Plates Increase	1.25	TC	0.52	Vert(LL)	-0.26	10-11	>999	240	MT20	244/190
TCDL	7.0	Lumber Increase	1.25	BC	0.73	Vert(TL)	-0.42	10-11	>728	180	MT18H	244/190
BCLL	10.0	Rep Stress Incr	YES	WB	0.52	Horz(TL)	0.24	7	n/a	n/a		
BCDL	5.0	Code FBC2004/TPI2002		(Matrix)							Weight: 132 lb	

LUMBER
TOP CHORD 2 X 4 SYP No.2
BOT CHORD 2 X 4 SYP No.2
WEBS 2 X 4 SYP No.3

BRACING
TOP CHORD Structural wood sheathing directly applied or 2-11-0 oc purlins, except end verticals.
BOT CHORD Rigid ceiling directly applied or 5-9-14 oc bracing.

REACTIONS (lb/size) 2=1181/0-3-8, 7=1056/0-3-8
Max Horz 2=184(load case 5)
Max Uplift2=-474(load case 5), 7=-337(load case 6)

FORCES (lb) - Maximum Compression/Maximum Tension
TOP CHORD 1-2=0/46, 2-3=-3428/1322, 3-4=-2634/1099, 4-5=-1739/760, 5-6=-1533/689, 6-7=-987/456
BOT CHORD 2-11=-1146/3077, 10-11=-1177/2944, 9-10=-471/1480, 8-9=-590/1387, 7-8=-19/110
WEBS 3-11=0/234, 3-10=-619/394, 4-10=-560/1620, 4-9=-63/207, 5-9=-17/248, 5-8=-467/300, 6-8=-577/1266

NOTES
1) Unbalanced roof live loads have been considered for this design.
2) Wind: ASCE 7-02; 110mph (3-second gust); h=20ft; TCDL=4.2psf; BCDL=3.0psf; Category II; Exp B; enclosed; MWFRS gable end zone and C-C Exterior(2) zone; Lumber DOL=1.60 plate grip DOL=1.60. This truss is designed for C-C for members and forces, and for MWFRS for reactions specified.
3) All plates are MT20 plates unless otherwise indicated.
4) Bearing at joint(s) 2 considers parallel to grain value using ANSI/TPI 1 angle to grain formula. Building designer should verify capacity of bearing surface.
5) Provide mechanical connection (by others) of truss to bearing plate capable of withstanding 474 lb uplift at joint 2 and 337 lb uplift at joint 7.

LOAD CASE(S) Standard

NOVEMBER 10,2005 TRUSS DESIGN ENGINEER:
THOMAS E. MILLER PE 56877, BYRON K. ANDERSON PE 60987
STRUCTURAL ENGINEERING AND INSPECTIONS, INC. EB 9196
16105 N. FLORIDA AVE. STE B, LUTZ, FL 33549

Job	Truss	Truss Type	Qty	Ply	BRYAN ZECHER-LOT 19 CSE
L139395	T10	SPECIAL	1	1	Job Reference (optional)

Dwg.#1110051481

Builders FirstSource, Lake City, Fl 32055 — 6.200 s Jul 13 2005 MiTek Industries, Inc. Mon Nov 07 15:38:29 2005 Page 1

-2-0-0	6-7-3	12-4-8	14-7-8	21-4-8	25-6-8
2-0-0	6-7-3	5-9-5	2-3-0	6-9-0	4-2-0

Scale = 1:47.5

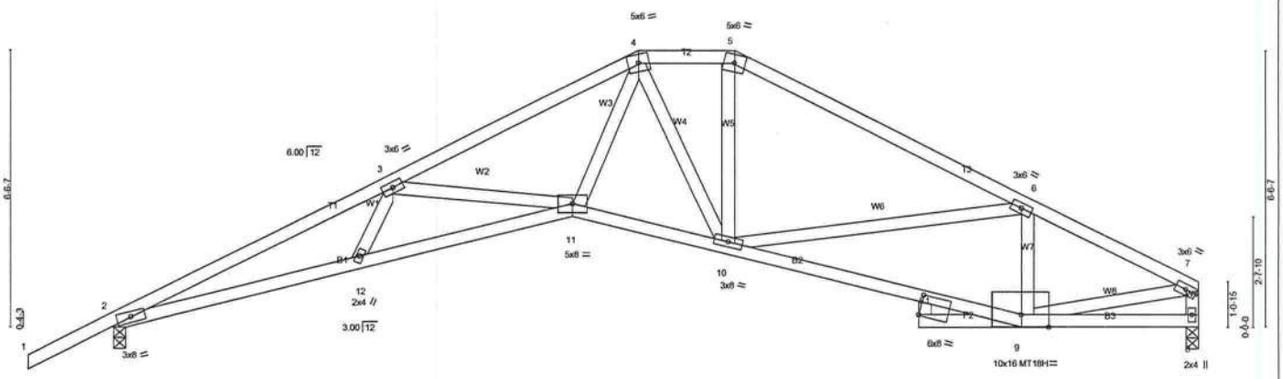

5-9-15	10-10-0	14-7-8	18-11-8	21-4-8	25-6-8
5-9-15	5-0-1	3-9-8	4-4-0	2-5-0	4-2-0

Plate Offsets (X,Y): [9:0-7-12,Edge], [13:0-0-2,0-5-13]

LOADING (psf)		SPACING	2-0-0	CSI		DEFL	in	(loc)	l/defl	L/d	PLATES	GRIP
TCLL	20.0	Plates Increase	1.25	TC	0.42	Vert(LL)	-0.26	11-12	>999	240	MT20	244/190
TCDL	7.0	Lumber Increase	1.25	BC	0.65	Vert(TL)	-0.42	11-12	>721	180	MT18H	244/190
BCLL	10.0	Rep Stress Incr	YES	WB	0.48	Horz(TL)	0.24	8	n/a	n/a		
BCDL	5.0	Code FBC2004/TPI2002		(Matrix)							Weight: 137 lb	

LUMBER
TOP CHORD 2 X 4 SYP No.2
BOT CHORD 2 X 4 SYP No.2
WEBS 2 X 4 SYP No.3

BRACING
TOP CHORD Structural wood sheathing directly applied or 3-0-9 oc purlins, except end verticals.
BOT CHORD Rigid ceiling directly applied or 5-9-0 oc bracing.

REACTIONS (lb/size) 2=1181/0-3-8, 8=1056/0-3-8
Max Horz 2=176(load case 5)
Max Uplift2=-469(load case 5), 8=-330(load case 6)

FORCES (lb) - Maximum Compression/Maximum Tension
TOP CHORD 1-2=0/46, 2-3=-3454/1337, 3-4=-2614/1062, 4-5=-1506/749, 5-6=-1750/749, 6-7=-1536/664, 7-8=-1003/449
BOT CHORD 2-12=-1166/3105, 11-12=-1195/3020, 10-11=-549/1745, 9-10=-561/1388, 8-9=-49/116
WEBS 3-12=0/205, 3-11=-661/426, 4-11=-516/1483, 4-10=-526/179, 5-10=-110/498, 6-10=-58/254, 6-9=-418/287, 7-9=-516/1254

NOTES
1) Unbalanced roof live loads have been considered for this design.
2) Wind: ASCE 7-02; 110mph (3-second gust); h=20ft; TCDL=4.2psf; BCDL=3.0psf; Category II; Exp B; enclosed; MWFRS gable end zone and C-C Exterior(2) zone; Lumber DOL=1.60 plate grip DOL=1.60. This truss is designed for C-C for members and forces, and for MWFRS for reactions specified.
3) Provide adequate drainage to prevent water ponding.
4) All plates are MT20 plates unless otherwise indicated.
5) Bearing at joint(s) 2 considers parallel to grain value using ANSI/TPI 1 angle to grain formula. Building designer should verify capacity of bearing surface.
6) Provide mechanical connection (by others) of truss to bearing plate capable of withstanding 469 lb uplift at joint 2 and 330 lb uplift at joint 8.

LOAD CASE(S) Standard

NOVEMBER 10,2005 TRUSS DESIGN ENGINEER:
THOMAS E. MILLER PE 56877, BYRON K. ANDERSON PE 60987
STRUCTURAL ENGINEERING AND INSPECTIONS, INC. EB 9196
16105 N. FLORIDA AVE. STE B, LUTZ, FL 33549

Job	Truss	Truss Type	Qty	Ply	BRYAN ZECHER-LOT 19 CSE Dwg.#1110051482
L139395	T11	SPECIAL	1	1	Job Reference (optional)

Builders FirstSource, Lake City, Fl 32055 — 6.200 s Jul 13 2005 MiTek Industries, Inc. Mon Nov 07 15:38:30 2005 Page 1

-2-0-0	6-4-13	11-11-12	13-7-0	16-7-8	21-4-8	25-6-8
2-0-0	6-4-13	5-6-15	1-7-4	3-0-8	4-9-0	4-2-0

Scale: 1/4"=1'

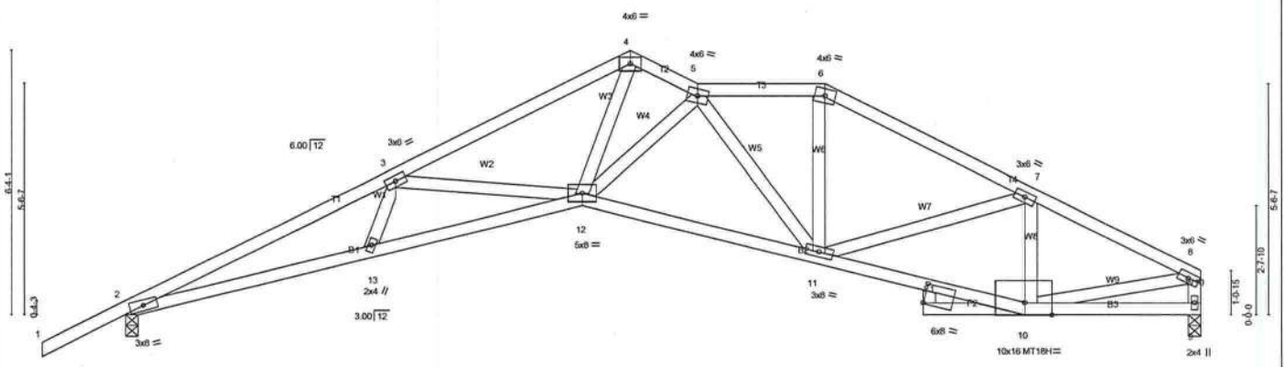

5-9-15	10-10-0	16-7-8	18-11-8	21-4-8	25-6-8
5-9-15	5-0-1	5-9-8	2-4-0	2-5-0	4-2-0

Plate Offsets (X,Y): [10:0-7-12,Edge], [14:0-0-2,0-5-13]

LOADING (psf)		SPACING	2-0-0	CSI		DEFL	in	(loc)	l/defl	L/d	PLATES	GRIP
TCLL	20.0	Plates Increase	1.25	TC	0.40	Vert(LL)	-0.26	12-13	>999	240	MT20	244/190
TCDL	7.0	Lumber Increase	1.25	BC	0.71	Vert(TL)	-0.42	12-13	>725	180	MT18H	244/190
BCLL	10.0	Rep Stress Incr	YES	WB	0.57	Horz(TL)	0.25	9	n/a	n/a		
BCDL	5.0	Code FBC2004/TPI2002		(Matrix)							Weight: 138 lb	

LUMBER
TOP CHORD 2 X 4 SYP No.2
BOT CHORD 2 X 4 SYP No.2
WEBS 2 X 4 SYP No.3

BRACING
TOP CHORD Structural wood sheathing directly applied or 3-0-14 oc purlins, except end verticals.
BOT CHORD Rigid ceiling directly applied or 5-9-3 oc bracing.

REACTIONS (lb/size) 2=1181/0-3-8, 9=1056/0-3-8
Max Horz 2=173(load case 5)
Max Uplift2=-467(load case 5), 9=-350(load case 6)

FORCES (lb) - Maximum Compression/Maximum Tension
TOP CHORD 1-2=0/46, 2-3=-3440/1336, 3-4=-2654/1068, 4-5=-1906/838, 5-6=-1557/750, 6-7=-1778/773, 7-8=-1492/643, 8-9=-985/451
BOT CHORD 2-13=-1166/3087, 12-13=-1189/3033, 11-12=-704/2058, 10-11=-529/1328, 9-10=-84/182
WEBS 3-13=0/179, 3-12=-647/401, 4-12=-647/1792, 5-12=-403/209, 5-11=-716/260, 6-11=-133/490, 7-11=-69/283, 7-10=-435/255, 8-10=-448/1133

NOTES
1) Unbalanced roof live loads have been considered for this design.
2) Wind: ASCE 7-02; 110mph (3-second gust); h=20ft; TCDL=4.2psf; BCDL=3.0psf; Category II; Exp B; enclosed; MWFRS gable end zone and C-C Exterior(2) zone; Lumber DOL=1.60 plate grip DOL=1.60. This truss is designed for C-C for members and forces, and for MWFRS for reactions specified.
3) Provide adequate drainage to prevent water ponding.
4) All plates are MT20 plates unless otherwise indicated.
5) Bearing at joint(s) 2 considers parallel to grain value using ANSI/TPI 1 angle to grain formula. Building designer should verify capacity of bearing surface.
6) Provide mechanical connection (by others) of truss to bearing plate capable of withstanding 467 lb uplift at joint 2 and 350 lb uplift at joint 9.

LOAD CASE(S) Standard

NOVEMBER 10,2005 TRUSS DESIGN ENGINEER:
THOMAS E. MILLER PE 56877, BYRON K. ANDERSON PE 60987
STRUCTURAL ENGINEERING AND INSPECTIONS, INC. EB 9196
16105 N. FLORIDA AVE. STE B, LUTZ, FL 33549

Job	Truss	Truss Type	Qty	Ply	BRYAN ZECHER-LOT 19 CSF Dwg.#1110051483
L139395	T12	SPECIAL	1	1	Job Reference (optional)

Builders FirstSource, Lake City, Fl 32055 — 6.200 s Jul 13 2005 MiTek Industries, Inc. Mon Nov 07 15:38:31 2005 Page 1

-2-0-0	6-4-13	11-11-12	14-8-8	17-9-0	21-4-8	25-6-8
2-0-0	6-4-13	5-6-15	2-8-12	3-0-8	3-7-8	4-2-0

Scale: 1/4"=1'

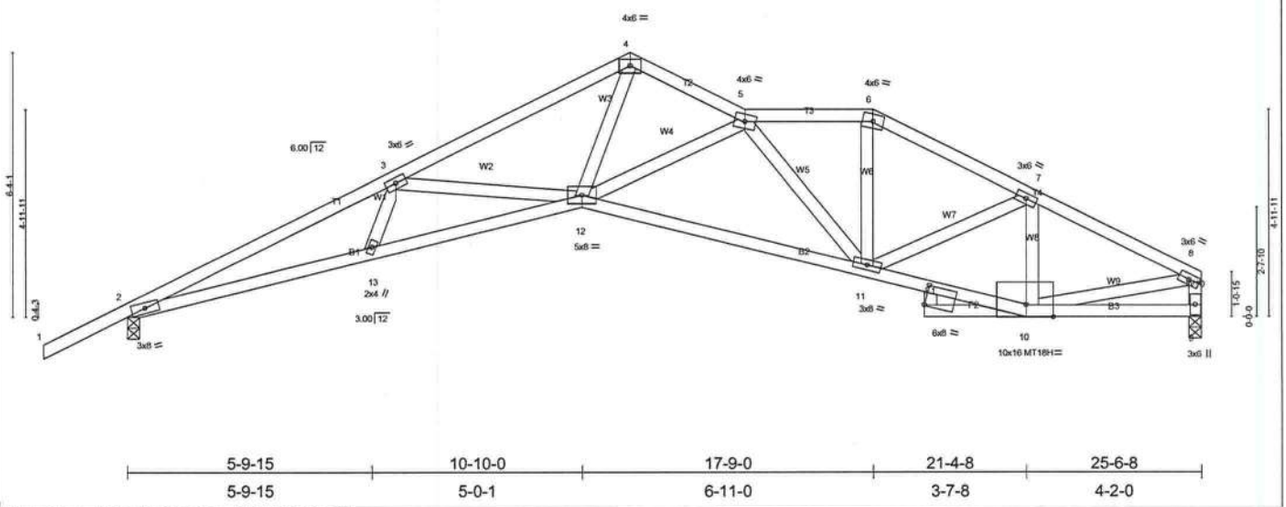

5-9-15	10-10-0	17-9-0	21-4-8	25-6-8
5-9-15	5-0-1	6-11-0	3-7-8	4-2-0

Plate Offsets (X,Y): [10:0-7-12,Edge], [14:0-0-2,0-5-13]

LOADING (psf)		SPACING	2-0-0	CSI		DEFL	in	(loc)	l/defl	L/d	PLATES	GRIP
TCLL	20.0	Plates Increase	1.25	TC	0.40	Vert(LL)	-0.26	11-12	>999	240	MT20	244/190
TCDL	7.0	Lumber Increase	1.25	BC	0.72	Vert(TL)	-0.43	11-12	>712	180	MT18H	244/190
BCLL	10.0	Rep Stress Incr	YES	WB	0.59	Horz(TL)	0.25	9	n/a	n/a		
BCDL	5.0	Code FBC2004/TPI2002		(Matrix)							Weight: 137 lb	

LUMBER
TOP CHORD 2 X 4 SYP No.2
BOT CHORD 2 X 4 SYP No.2
WEBS 2 X 4 SYP No.3

BRACING
TOP CHORD Structural wood sheathing directly applied or 3-0-14 oc purlins, except end verticals.
BOT CHORD Rigid ceiling directly applied or 5-9-2 oc bracing.

REACTIONS (lb/size) 2=1181/0-3-8, 9=1056/0-3-8
Max Horz 2=173(load case 5)
Max Uplift2=-467(load case 5), 9=-350(load case 6)

FORCES (lb) - Maximum Compression/Maximum Tension
TOP CHORD 1-2=0/46, 2-3=-3436/1340, 3-4=-2663/1066, 4-5=-1936/838, 5-6=-1564/739, 6-7=-1767/772, 7-8=-1474/636, 8-9=-976/452
BOT CHORD 2-13=-1170/3084, 12-13=-1192/3035, 11-12=-805/2212, 10-11=-518/1305, 9-10=-95/208
WEBS 3-13=0/169, 3-12=-642/406, 4-12=-668/1836, 5-12=-495/276, 5-11=-909/379, 6-11=-180/543, 7-11=-65/326, 7-10=-460/241, 8-10=-426/1086

NOTES
1) Unbalanced roof live loads have been considered for this design.
2) Wind: ASCE 7-02; 110mph (3-second gust); h=20ft; TCDL=4.2psf; BCDL=3.0psf; Category II; Exp B; enclosed; MWFRS gable end zone and C-C Exterior(2) zone; Lumber DOL=1.60 plate grip DOL=1.60. This truss is designed for C-C for members and forces, and for MWFRS for reactions specified.
3) Provide adequate drainage to prevent water ponding.
4) All plates are MT20 plates unless otherwise indicated.
5) Bearing at joint(s) 2 considers parallel to grain value using ANSI/TPI 1 angle to grain formula. Building designer should verify capacity of bearing surface.
6) Provide mechanical connection (by others) of truss to bearing plate capable of withstanding 467 lb uplift at joint 2 and 350 lb uplift at joint 9.

LOAD CASE(S) Standard

NOVEMBER 10,2005 TRUSS DESIGN ENGINEER:
THOMAS E. MILLER PE 56877, BYRON K. ANDERSON PE 60987
STRUCTURAL ENGINEERING AND INSPECTIONS, INC. EB 9196
16105 N. FLORIDA AVE. STE B, LUTZ, FL 33549

Job	Truss	Truss Type	Qty	Ply	BRYAN ZECHER-EST 19 CSE Dwg.#1110051484
L139395	T13	SCISSOR	4	1	Job Reference (optional)

Builders FirstSource, Lake City, Fl 32055 — 6.200 s Jul 13 2005 MiTek Industries, Inc. Mon Nov 07 15:38:31 2005 Page 1

-2-0-0	6-4-13	11-11-12	16-1-4	21-8-0
2-0-0	6-4-13	5-6-15	4-1-8	5-6-12

Scale = 1:39.9

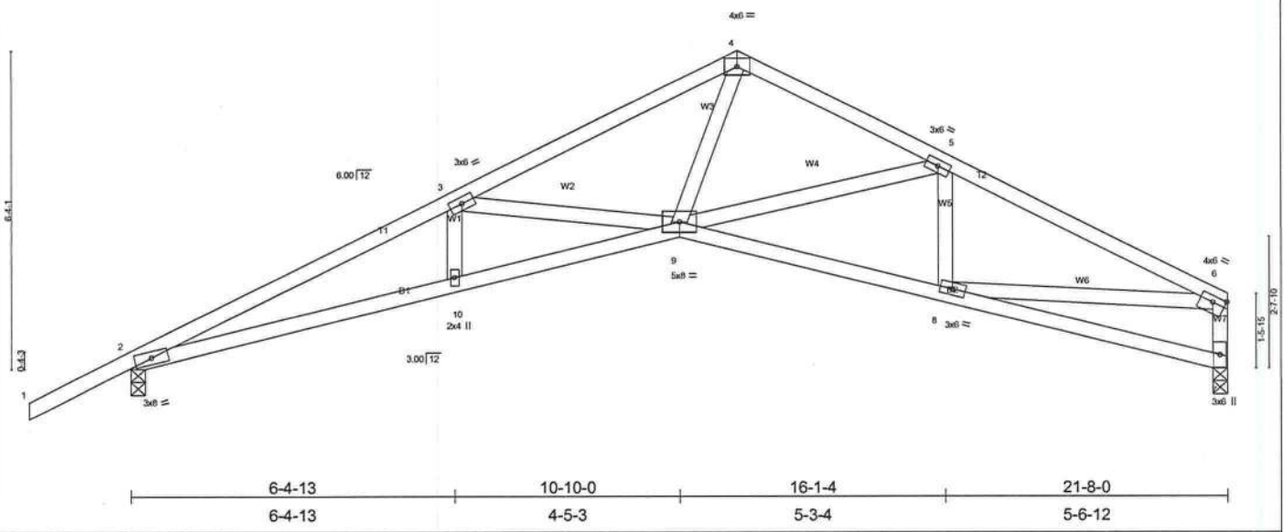

6-4-13	10-10-0	16-1-4	21-8-0
6-4-13	4-5-3	5-3-4	5-6-12

Plate Offsets (X,Y): [6:0-3-0,0-1-8]

LOADING (psf)		SPACING	2-0-0	CSI		DEFL	in	(loc)	l/defl	L/d	PLATES	GRIP
TCLL	20.0	Plates Increase	1.25	TC	0.52	Vert(LL)	-0.18	10	>999	240	MT20	244/190
TCDL	7.0	Lumber Increase	1.25	BC	0.57	Vert(TL)	-0.29	2-10	>888	180		
BCLL	10.0	Rep Stress Incr	YES	WB	0.41	Horz(TL)	0.19	7	n/a	n/a		
BCDL	5.0	Code FBC2004/TPI2002		(Matrix)							Weight: 107 lb	

LUMBER
TOP CHORD 2 X 4 SYP No.2
BOT CHORD 2 X 4 SYP No.2
WEBS 2 X 4 SYP No.3

BRACING
TOP CHORD Structural wood sheathing directly applied or 3-6-0 oc purlins, except end verticals.
BOT CHORD Rigid ceiling directly applied or 6-4-3 oc bracing.

REACTIONS (lb/size) 2=1019/0-3-8, 7=892/0-3-8
Max Horz 2=186(load case 5)
Max Uplift2=-424(load case 5), 7=-280(load case 6)

FORCES (lb) - Maximum Compression/Maximum Tension
TOP CHORD 1-2=0/46, 2-3=-2758/1103, 3-4=-1962/813, 4-5=-1477/657, 5-6=-1647/689, 6-7=-850/418
BOT CHORD 2-10=-976/2474, 9-10=-980/2467, 8-9=-557/1471, 7-8=-115/216
WEBS 3-10=0/162, 3-9=-718/406, 4-9=-471/1288, 5-9=-248/182, 5-8=-138/147, 6-8=-426/1216

NOTES
1) Unbalanced roof live loads have been considered for this design.
2) Wind: ASCE 7-02; 110mph (3-second gust); h=20ft; TCDL=4.2psf; BCDL=3.0psf; Category II; Exp B; enclosed; MWFRS gable end zone and C-C Exterior(2) zone; Lumber DOL=1.60 plate grip DOL=1.60. This truss is designed for C-C for members and forces, and for MWFRS for reactions specified.
3) Bearing at joint(s) 2, 7 considers parallel to grain value using ANSI/TPI 1 angle to grain formula. Building designer should verify capacity of bearing surface.
4) Provide mechanical connection (by others) of truss to bearing plate capable of withstanding 424 lb uplift at joint 2 and 280 lb uplift at joint 7.

LOAD CASE(S) Standard

NOVEMBER 10,2005 TRUSS DESIGN ENGINEER:
THOMAS E. MILLER PE 56877, BYRON K. ANDERSON PE 60987
STRUCTURAL ENGINEERING AND INSPECTIONS, INC. EB 9196
16105 N. FLORIDA AVE. STE B, LUTZ, FL 33549

Job	Truss	Truss Type	Qty	Ply	BRYAN ZECHER-LOT 19 CSE
L139395	T14	SPECIAL	4	1	Job Reference (optional)

Dwg.#1110051485

Builders FirstSource, Lake City, Fl 32055 — 6.200 s Jul 13 2005 MiTek Industries, Inc. Mon Nov 07 15:38:32 2005 Page 1

-2-0-0	6-4-13	11-11-12	16-1-4	21-4-8	23-11-8	25-11-8
2-0-0	6-4-13	5-6-15	4-1-8	5-3-4	2-7-0	2-0-0

Scale = 1:46.9

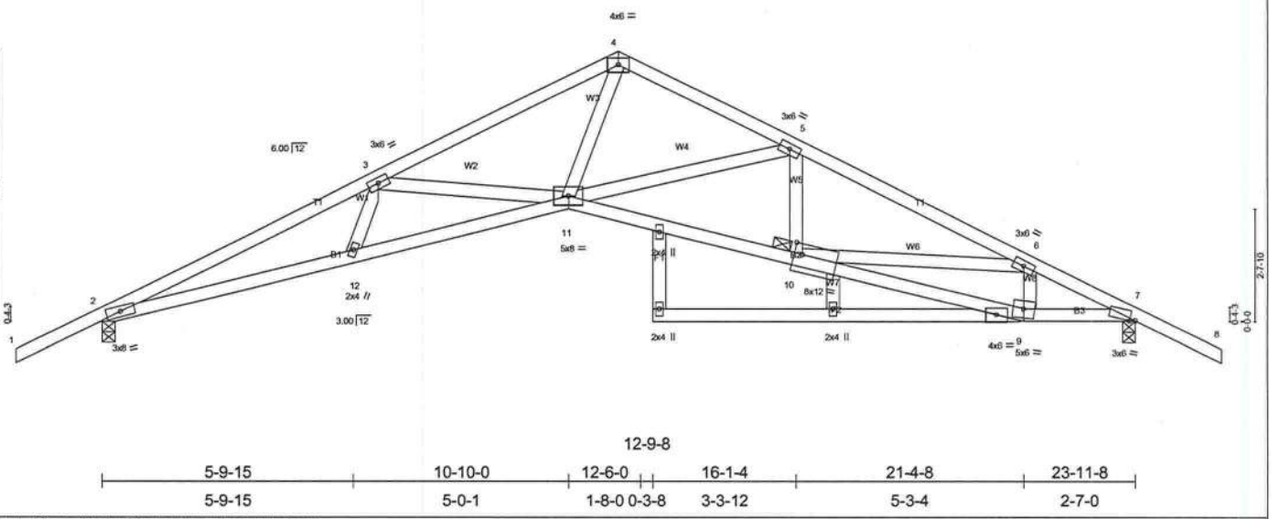

12-9-8

5-9-15	10-10-0	12-6-0	16-1-4	21-4-8	23-11-8
5-9-15	5-0-1	1-8-0 0-3-8	3-3-12	5-3-4	2-7-0

Plate Offsets (X,Y): [7:0-1-9,0-0-7], [10:0-2-4,0-3-0]

LOADING (psf)		SPACING	2-0-0	CSI		DEFL	in	(loc)	l/defl	L/d	PLATES	GRIP
TCLL	20.0	Plates Increase	1.25	TC	0.36	Vert(LL)	-0.24	11-12	>999	240	MT20	244/190
TCDL	7.0	Lumber Increase	1.25	BC	0.66	Vert(TL)	-0.39	11-12	>735	180		
BCLL	10.0	Rep Stress Incr	YES	WB	0.51	Horz(TL)	0.24	7	n/a	n/a		
BCDL	5.0	Code FBC2004/TPI2002		(Matrix)							Weight: 135 lb	

LUMBER
TOP CHORD 2 X 4 SYP No.2
BOT CHORD 2 X 4 SYP No.2
WEBS 2 X 4 SYP No.3

BRACING
TOP CHORD Structural wood sheathing directly applied or 3-2-15 oc purlins.
BOT CHORD Rigid ceiling directly applied or 6-10-6 oc bracing.
JOINTS 1 Brace at Jt(s): 10

REACTIONS (lb/size) 2=1110/0-3-8, 7=1110/0-3-8
Max Horz 2=-122(load case 6)
Max Uplift2=-448(load case 5), 7=-448(load case 6)

FORCES (lb) - Maximum Compression/Maximum Tension
TOP CHORD 1-2=0/46, 2-3=-3155/1091, 3-4=-2347/805, 4-5=-1752/652, 5-6=-2262/846, 6-7=-1863/687, 7-8=0/47
BOT CHORD 2-12=-818/2828, 11-12=-840/2773, 10-11=-559/2046, 9-10=-484/1647, 7-9=-489/1613
WEBS 3-12=0/181, 3-11=-671/420, 4-11=-468/1602, 5-11=-527/304, 5-10=0/106, 6-10=-73/390, 6-9=-314/209

NOTES
1) Unbalanced roof live loads have been considered for this design.
2) Wind: ASCE 7-02; 110mph (3-second gust); h=20ft; TCDL=4.2psf; BCDL=3.0psf; Category II; Exp B; enclosed; MWFRS gable end zone and C-C Exterior(2) zone; Lumber DOL=1.60 plate grip DOL=1.60. This truss is designed for C-C for members and forces, and for MWFRS for reactions specified.
3) Bearing at joint(s) 2 considers parallel to grain value using ANSI/TPI 1 angle to grain formula. Building designer should verify capacity of bearing surface.
4) Provide mechanical connection (by others) of truss to bearing plate capable of withstanding 448 lb uplift at joint 2 and 448 lb uplift at joint 7.

LOAD CASE(S) Standard

NOVEMBER 10,2005 TRUSS DESIGN ENGINEER:
THOMAS E. MILLER PE 56877, BYRON K. ANDERSON PE 60987
STRUCTURAL ENGINEERING AND INSPECTIONS, INC. EB 9196
16105 N. FLORIDA AVE. STE B, LUTZ, FL 33549

Job	Truss	Truss Type	Qty	Ply	BRYAN ZECHER-LOT 19 CSE Dwg.#1110051486
L139395	T15H	HIP	1	1	Job Reference (optional)

Builders FirstSource, Lake City, Fl 32055 — 6.200 s Jul 13 2005 MiTek Industries, Inc. Mon Nov 07 15:38:33 2005 Page 1

-2-0-0	2-0-0	5-11-0	9-10-0	11-10-0	13-10-0
2-0-0	2-0-0	3-11-0	3-11-0	2-0-0	2-0-0

Scale = 1:26.3

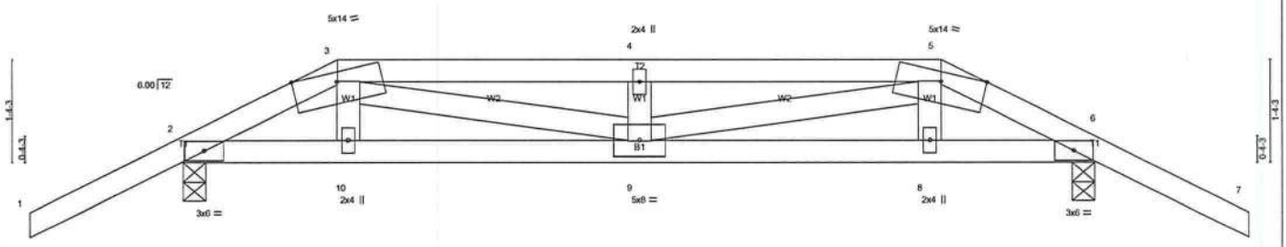

2-0-0	5-11-0	9-10-0	11-10-0
2-0-0	3-11-0	3-11-0	2-0-0

LOADING (psf)		SPACING	2-0-0	CSI		DEFL	in	(loc)	l/defl	L/d	PLATES	GRIP
TCLL	20.0	Plates Increase	1.25	TC	0.27	Vert(LL)	-0.05	9	>999	240	MT20	244/190
TCDL	7.0	Lumber Increase	1.25	BC	0.24	Vert(TL)	-0.07	9	>999	180		
BCLL	10.0	Rep Stress Incr	NO	WB	0.18	Horz(TL)	0.01	6	n/a	n/a		
BCDL	5.0	Code FBC2004/TPI2002		(Matrix)							Weight: 57 lb	

LUMBER
TOP CHORD 2 X 4 SYP No.2
BOT CHORD 2 X 4 SYP No.2
WEBS 2 X 4 SYP No.3

BRACING
TOP CHORD Structural wood sheathing directly applied or 5-8-7 oc purlins.
BOT CHORD Rigid ceiling directly applied or 10-0-0 oc bracing.

REACTIONS (lb/size) 2=591/0-3-8, 6=591/0-3-8
Max Horz 2=-52(load case 5)
Max Uplift2=-250(load case 4), 6=-250(load case 5)
Max Grav 2=593(load case 8), 6=593(load case 9)

FORCES (lb) - Maximum Compression/Maximum Tension
TOP CHORD 1-2=0/47, 2-3=-762/240, 3-4=-1195/404, 4-5=-1195/404, 5-6=-762/241, 6-7=0/47
BOT CHORD 2-10=-178/657, 9-10=-175/671, 8-9=-170/671, 6-8=-173/657
WEBS 3-10=0/100, 3-9=-235/567, 4-9=-195/138, 5-9=-236/567, 5-8=0/100

NOTES
1) Unbalanced roof live loads have been considered for this design.
2) Wind: ASCE 7-02; 110mph (3-second gust); h=20ft; TCDL=4.2psf; BCDL=3.0psf; Category II; Exp B; enclosed; MWFRS gable end zone; Lumber DOL=1.60 plate grip DOL=1.60.
3) Provide adequate drainage to prevent water ponding.
4) Provide mechanical connection (by others) of truss to bearing plate capable of withstanding 250 lb uplift at joint 2 and 250 lb uplift at joint 6.
5) Girder carries hip end with 2-0-0 end setback.
6) Hanger(s) or other connection device(s) shall be provided sufficient to support concentrated load(s) 14 lb down and 7 lb up at 9-10-0, and 14 lb down and 7 lb up at 2-0-0 on bottom chord. The design/selection of such connection device(s) is the responsibility of others.
7) In the LOAD CASE(S) section, loads applied to the face of the truss are noted as front (F) or back (B).

LOAD CASE(S) Standard
1) Regular: Lumber Increase=1.25, Plate Increase=1.25
Uniform Loads (plf)
Vert: 1-3=-54, 3-5=-50(F=4), 5-7=-54, 2-10=-30, 8-10=-28(F=2), 6-8=-30
Concentrated Loads (lb)
Vert: 10=-14(F) 8=-14(F)

NOVEMBER 10,2005 TRUSS DESIGN ENGINEER:
THOMAS E. MILLER PE 56877, BYRON K. ANDERSON PE 60987
STRUCTURAL ENGINEERING AND INSPECTIONS, INC. EB 9196
16105 N. FLORIDA AVE. STE B, LUTZ, FL 33549

Job	Truss	Truss Type	Qty	Ply	BRYAN ZECHER-TOT 19 CSE Dwg.#1110051487
L139395	T15HGR	HIP	1	2	Job Reference (optional)

Builders FirstSource, Lake City, Fl 32055 — 6.200 s Jul 13 2005 MiTek Industries, Inc. Mon Nov 07 15:38:34 2005 Page 1

-2-0-0	2-4-8	5-11-0	9-5-8	11-10-0
2-0-0	2-4-8	3-6-8	3-6-8	2-4-8

Scale = 1:22.9

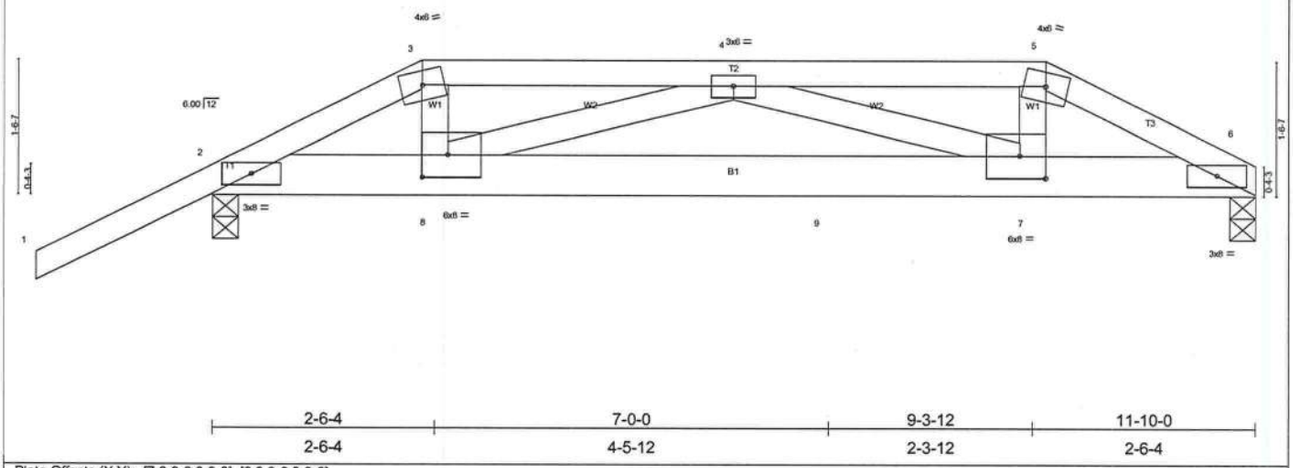

2-6-4	7-0-0	9-3-12	11-10-0
2-6-4	4-5-12	2-3-12	2-6-4

Plate Offsets (X,Y): [7:0-3-8,0-3-0], [8:0-3-8,0-3-0]

LOADING (psf)		SPACING	2-0-0	CSI		DEFL	in	(loc)	l/defl	L/d	PLATES	GRIP
TCLL	20.0	Plates Increase	1.25	TC	0.20	Vert(LL)	-0.15	7-8	>916	240	MT20	244/190
TCDL	7.0	Lumber Increase	1.25	BC	0.82	Vert(TL)	-0.24	7-8	>571	180		
BCLL	10.0	Rep Stress Incr	NO	WB	0.37	Horz(TL)	0.02	6	n/a	n/a		
BCDL	5.0	Code FBC2004/TPI2002		(Matrix)							Weight: 124 lb	

LUMBER
TOP CHORD 2 X 4 SYP No.2
BOT CHORD 2 X 6 SYP No.1D
WEBS 2 X 4 SYP No.3

BRACING
TOP CHORD Structural wood sheathing directly applied or 5-10-1 oc purlins.
BOT CHORD Rigid ceiling directly applied or 10-0-0 oc bracing.

REACTIONS (lb/size) 6=1823/0-3-8, 2=1534/0-3-8
Max Horz 2=84(load case 4)
Max Uplift6=-642(load case 2), 2=-613(load case 4)

FORCES (lb) - Maximum Compression/Maximum Tension
TOP CHORD 1-2=0/51, 2-3=-3716/1313, 3-4=-3449/1239, 4-5=-4744/1721, 5-6=-5096/1827
BOT CHORD 2-8=-1155/3243, 8-9=-1681/4450, 7-9=-1681/4450, 6-7=-1588/4453
WEBS 3-8=-541/1665, 5-7=-803/2321, 4-8=-1058/518, 4-7=-127/311

NOTES
1) 2-ply truss to be connected together with 0.131"x3" Nails as follows:
Top chords connected as follows: 2 X 4 - 1 row at 0-9-0 oc.
Bottom chords connected as follows: 2 X 6 - 2 rows at 0-4-0 oc.
Webs connected as follows: 2 X 4 - 1 row at 0-9-0 oc.
2) All loads are considered equally applied to all plies, except if noted as front (F) or back (B) face in the LOAD CASE(S) section. Ply to ply connections have been provided to distribute only loads noted as (F) or (B), unless otherwise indicated.
3) Unbalanced roof live loads have been considered for this design.
4) Wind: ASCE 7-02; 110mph (3-second gust); h=20ft; TCDL=4.2psf; BCDL=3.0psf; Category II; Exp B; enclosed; MWFRS gable end zone; Lumber DOL=1.60 plate grip DOL=1.60.
5) Provide adequate drainage to prevent water ponding.
6) Provide mechanical connection (by others) of truss to bearing plate capable of withstanding 642 lb uplift at joint 6 and 613 lb uplift at joint 2.
7) Hanger(s) or other connection device(s) shall be provided sufficient to support concentrated load(s) 2271 lb down and 857 lb up at 7-0-0 on bottom chord. The design/selection of such connection device(s) is the responsibility of others.

LOAD CASE(S) Standard
1) Regular: Lumber Increase=1.25, Plate Increase=1.25
Uniform Loads (plf)
Vert: 1-3=-54, 3-5=-54, 5-6=-54, 2-6=-30
Concentrated Loads (lb)
Vert: 9=-2271(F)

NOVEMBER 10,2005 TRUSS DESIGN ENGINEER:
THOMAS E. MILLER PE 56877, BYRON K. ANDERSON PE 60987
STRUCTURAL ENGINEERING AND INSPECTIONS, INC. EB 9196
16105 N. FLORIDA AVE. STE B, LUTZ, FL 33549

Job	Truss	Truss Type	Qty	Ply	BRYAN ZECHER-LOT 19 CSE Dwg.#1110051488
L139395	T16	MONO HIP	1	1	Job Reference (optional)

Builders FirstSource, Lake City, Fl 32055 — 6.200 s Jul 13 2005 MiTek Industries, Inc. Mon Nov 07 15:38:34 2005 Page 1

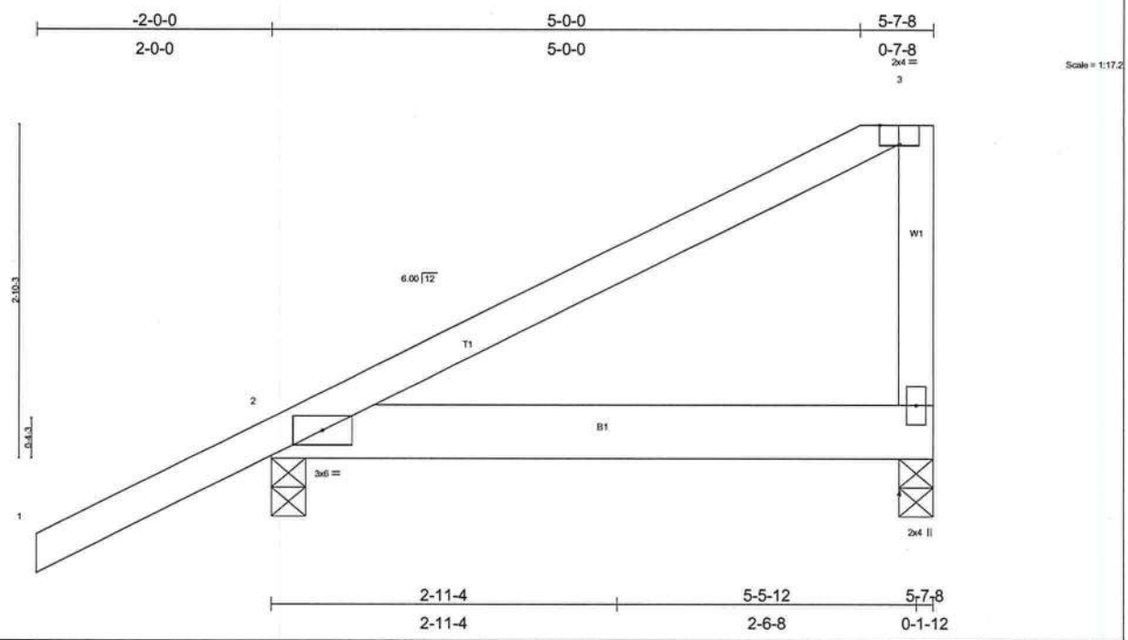

Plate Offsets (X,Y): [3:0-2-0,Edge]

LOADING (psf)		SPACING	2-0-0	CSI		DEFL	in	(loc)	l/defl	L/d	PLATES	GRIP
TCLL	20.0	Plates Increase	1.25	TC	0.28	Vert(LL)	0.01	2-4	>999	240	MT20	244/190
TCDL	7.0	Lumber Increase	1.25	BC	0.08	Vert(TL)	-0.02	2-4	>999	180		
BCLL	10.0	Rep Stress Incr	NO	WB	0.00	Horz(TL)	0.00		n/a	n/a		
BCDL	5.0	Code FBC2004/TPI2002		(Matrix)							Weight: 29 lb	

LUMBER
TOP CHORD 2 X 4 SYP No.2
BOT CHORD 2 X 6 SYP No.1D
WEBS 2 X 4 SYP No.3

BRACING
TOP CHORD Structural wood sheathing directly applied or 5-7-8 oc purlins, except end verticals.
BOT CHORD Rigid ceiling directly applied or 10-0-0 oc bracing.

REACTIONS (lb/size) 4=506/0-3-8, 2=363/0-3-8
Max Horz 2=188(load case 4)
Max Uplift4=-307(load case 4), 2=-273(load case 4)

FORCES (lb) - Maximum Compression/Maximum Tension
TOP CHORD 1-2=0/51, 2-3=-74/40, 3-4=-121/99
BOT CHORD 2-4=0/0

NOTES
1) Wind: ASCE 7-02; 110mph (3-second gust); h=20ft; TCDL=4.2psf; BCDL=3.0psf; Category II; Exp B; enclosed; MWFRS gable end zone; porch left and right exposed; Lumber DOL=1.60 plate grip DOL=1.60.
2) Provide mechanical connection (by others) of truss to bearing plate capable of withstanding 307 lb uplift at joint 4 and 273 lb uplift at joint 2.
3) Girder carries hip end with 0-0-0 right side setback, 5-5-12 left side setback, and 5-5-12 end setback.
4) Hanger(s) or other connection device(s) shall be provided sufficient to support concentrated load(s) 305 lb down and 157 lb up at 5-5-12 on bottom chord. The design/selection of such connection device(s) is the responsibility of others.
5) In the LOAD CASE(S) section, loads applied to the face of the truss are noted as front (F) or back (B).

LOAD CASE(S) Standard
1) Regular: Lumber Increase=1.25, Plate Increase=1.25
Uniform Loads (plf)
Vert: 1-3=-54, 2-4=-30
Concentrated Loads (lb)
Vert: 4=-305(F)

NOVEMBER 10,2005 TRUSS DESIGN ENGINEER:
THOMAS E. MILLER PE 56877, BYRON K. ANDERSON PE 60987
STRUCTURAL ENGINEERING AND INSPECTIONS, INC. EB 9196
16105 N. FLORIDA AVE. STE B, LUTZ, FL 33549

Job	Truss	Truss Type	Qty	Ply	BRYAN ZECHER-LOT 19 CSE Dwg.#1110051489
L139395	T17	MONO TRUSS	1	1	Job Reference (optional)

Builders FirstSource, Lake City, Fl 32055

6.200 s Jul 13 2005 MiTek Industries, Inc. Mon Nov 07 15:38:35 2005 Page 1

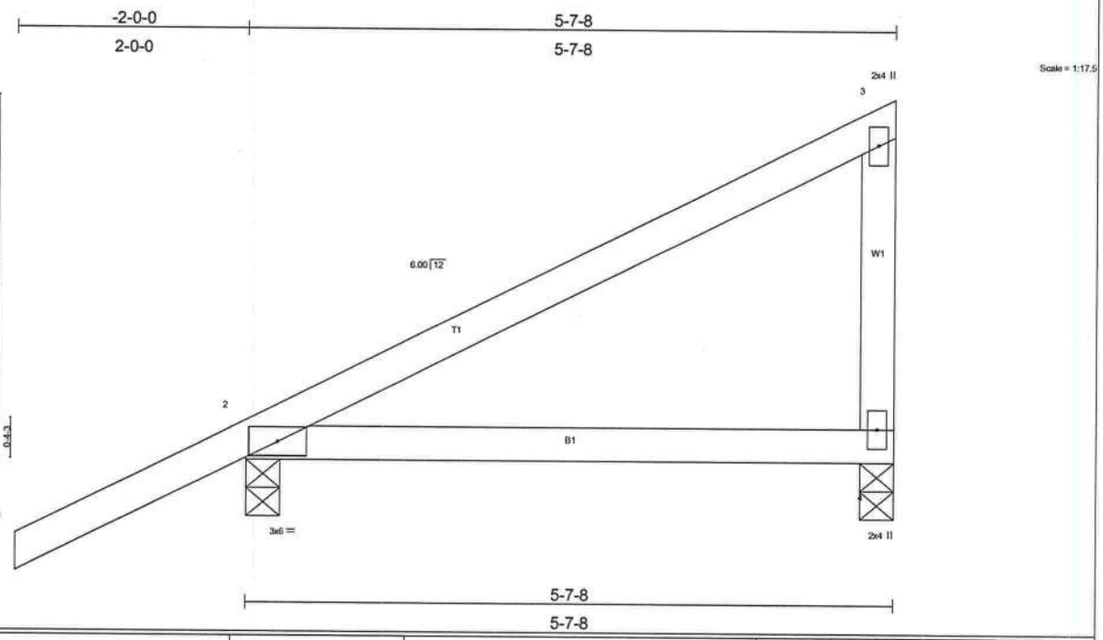

LOADING (psf)		SPACING	2-0-0	CSI		DEFL	in	(loc)	l/defl	L/d	PLATES	GRIP
TCLL	20.0	Plates Increase	1.25	TC	0.29	Vert(LL)	0.13	2-4	>482	240	MT20	244/190
TCDL	7.0	Lumber Increase	1.25	BC	0.30	Vert(TL)	0.11	2-4	>563	180		
BCLL	10.0	Rep Stress Incr	YES	WB	0.00	Horz(TL)	0.00		n/a	n/a		
BCDL	5.0	Code FBC2004/TPI2002		(Matrix)							Weight: 25 lb	

LUMBER
TOP CHORD 2 X 4 SYP No.2
BOT CHORD 2 X 4 SYP No.2
WEBS 2 X 4 SYP No.3

BRACING
TOP CHORD Structural wood sheathing directly applied or 5-7-8 oc purlins, except end verticals.
BOT CHORD Rigid ceiling directly applied or 10-0-0 oc bracing.

REACTIONS (lb/size) 2=363/0-3-8, 4=201/0-3-8
Max Horz 2=190(load case 5)
Max Uplift2=-268(load case 5), 4=-155(load case 5)

FORCES (lb) - Maximum Compression/Maximum Tension
TOP CHORD 1-2=0/47, 2-3=-100/42, 3-4=-121/171
BOT CHORD 2-4=0/0

NOTES
1) Wind: ASCE 7-02; 110mph (3-second gust); h=20ft; TCDL=4.2psf; BCDL=3.0psf; Category II; Exp B; enclosed; MWFRS gable end zone and C-C Exterior(2) zone; porch left and right exposed; Lumber DOL=1.60 plate grip DOL=1.60. This truss is designed for C-C for members and forces, and for MWFRS for reactions specified.
2) Provide mechanical connection (by others) of truss to bearing plate capable of withstanding 268 lb uplift at joint 2 and 155 lb uplift at joint 4.

LOAD CASE(S) Standard

NOVEMBER 10,2005 TRUSS DESIGN ENGINEER:
THOMAS E. MILLER PE 56877, BYRON K. ANDERSON PE 60987
STRUCTURAL ENGINEERING AND INSPECTIONS, INC. EB 9196
16105 N. FLORIDA AVE. STE B, LUTZ, FL 33549

Symbols

PLATE LOCATION AND ORIENTATION

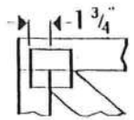

* Center plate on joint unless dimensions indicate otherwise. Dimensions are in inches. Apply plates to both sides of truss and securely seal.

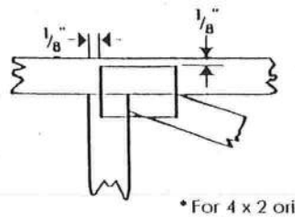

* For 4 x 2 orientation, locate plates 1/8" from outside edge of truss and vertical web.

* This symbol indicates the required direction of slots in connector plates.

PLATE SIZE

4 X 4

The first dimension is the width perpendicular to slots. Second dimension is the length parallel to slots.

LATERAL BRACING

Indicates location of required continuous lateral bracing.

BEARING

Indicates location of joints at which bearings (supports) occur.

Numbering System

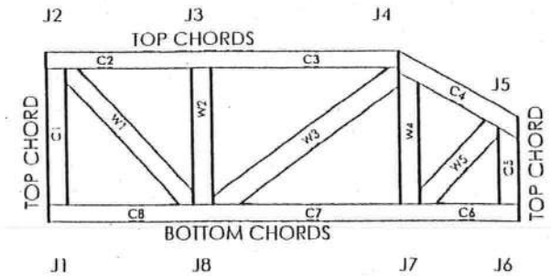

JOINTS AND CHORDS ARE NUMBERED CLOCKWISE AROUND THE TRUSS STARTING AT THE LOWEST JOINT FARTHEST TO THE LEFT.

WEBS ARE NUMBERED FROM LEFT TO RIGHT

CONNECTOR PLATE CODE APPROVALS

BOCA	96-31, 96-67
ICBO	3907, 4922
SBCCI	9667, 9432A
WISC/DILHR	960022-W, 970036-N
NER	561

MiTek Engineering Reference Sheet: MII-7473

General Safety Notes

Failure to Follow Could Cause Property Damage or Personal Injury

1. Provide copies of this truss design to the building designer, erection supervisor, property owner and all other interested parties.
2. Cut members to bear tightly against each other.
3. Place plates on each face of truss at each joint and embed fully. Avoid knots and wane at joint locations.
4. Unless otherwise noted, locate chord splices at ¼ panel length (± 6" from adjacent joint.)
5. Unless otherwise noted, moisture content of lumber shall not exceed 19% at time of fabrication.
6. Unless expressly noted, this design is not applicable for use with fire retardant or preservative treated lumber.
7. Camber is a non-structural consideration and is the responsibility of truss fabricator. General practice is to camber for dead load deflection.
8. Plate type, size and location dimensions shown indicate minimum plating requirements.
9. Lumber shall be of the species and size, and in all respects, equal to or better than the grade specified.
10. Top chords must be sheathed or purlins provided at spacing shown on design.
11. Bottom chords require lateral bracing at 10 ft. spacing, or less, if no ceiling is installed, unless otherwise noted.
12. Anchorage and / or load transferring connections to trusses are the responsibility of others unless shown.
13. Do not overload roof or floor trusses with stacks of construction materials.
14. Do not cut or alter truss member or plate without prior approval of a professional engineer.
15. Care should be exercised in handling, erection and installation of trusses.

© 1993 MiTek® Holdings, Inc.

Notice of Treatment 11594

Applicator: Florida Pest Control & Chemical Co. (www.flapest .com)
Address: Bava Ave
City LC Phone 752 7703

Site Location: Subdivision Countryside Est
Lot # 19 Block# _____ Permit # 23903
Address 215 St Gregory Gln

Product used	Active Ingredient	% Concentration
☐ Premise	Imidacloprid	0.1%
☐ Termidor	Fipronil	0.12%
☑ Bora-Care	Disodium Octaborate Tetrahydrate	23.0%

Type treatment: ☐ Soil ☑ Wood

Area Treated	Square feet	Linear feet	Gallons Applied
Dwelling	1665	752	4

As per Florida Building Code 104.2.6 – If soil chemical barrier method for termite prevention is used, final exterior treatment shall be completed prior to final building approval.

If this notice is for the final exterior treatment, initial this line _____.

1-27-06	1000	F254
Date	Time	Print Technician's Name

Remarks: _____

Applicator - White Permit File - Canary Permit Holder - Pink

10/05 ©

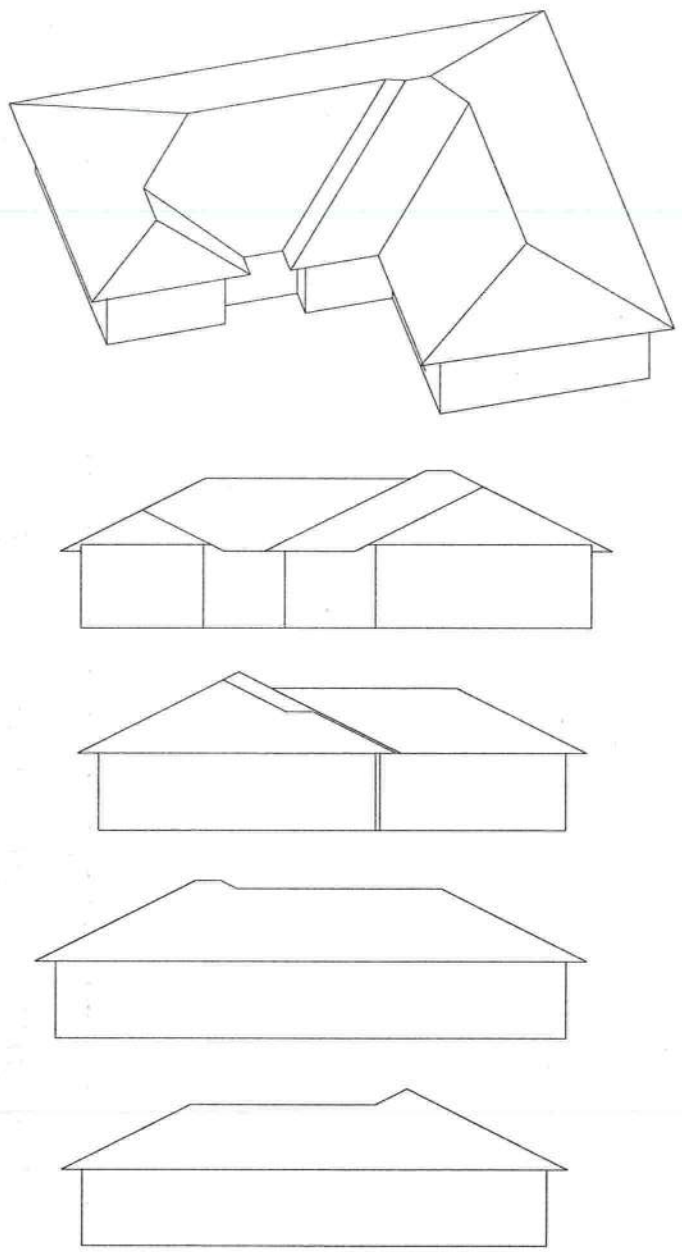

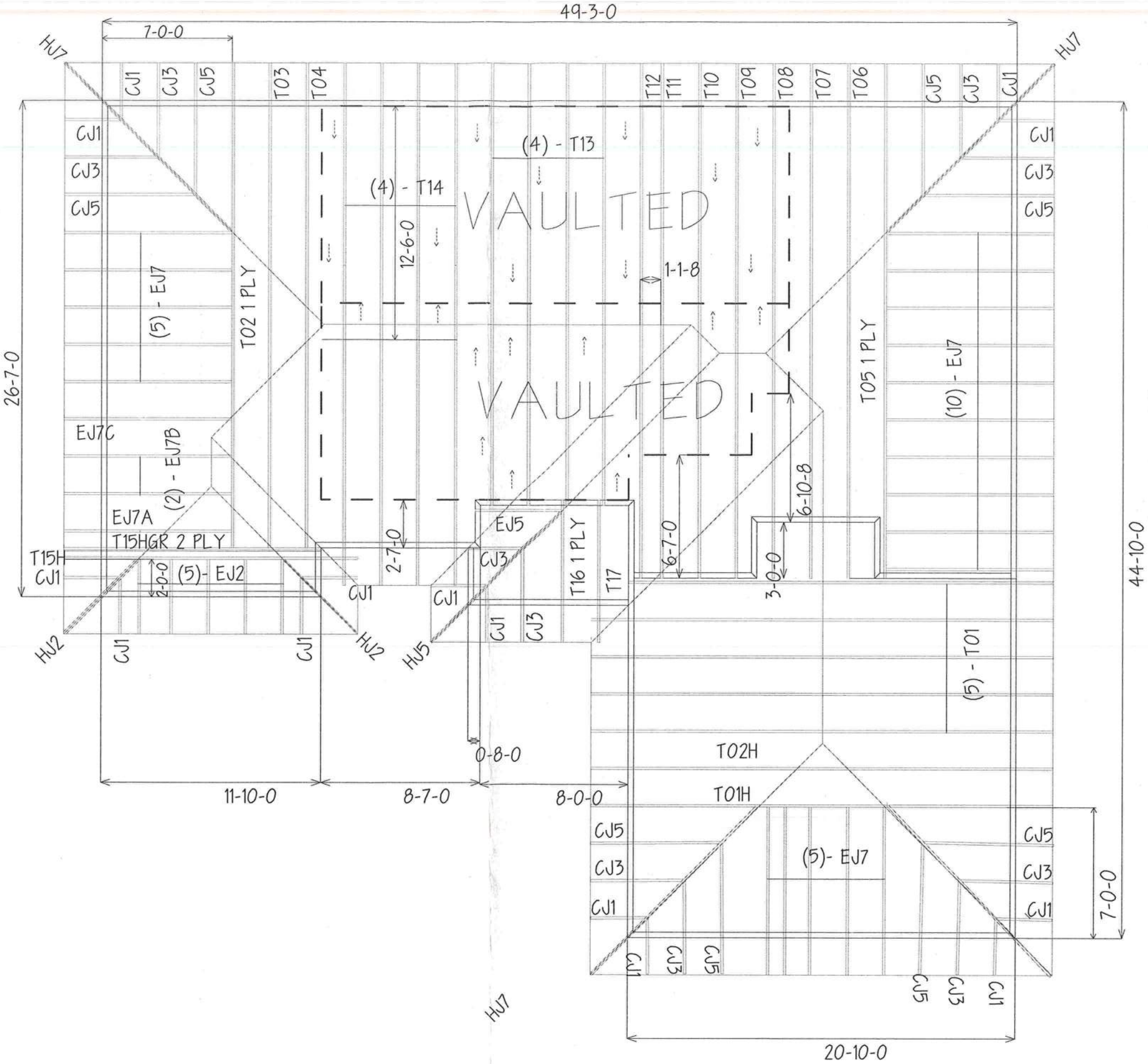

HANGER SCHEDULE

3 HTU26

BEARING HEIGHT SCHEDULE

8'

2' O/H
6/12

NOTES:

1.) REFER TO HIB 91 (RECOMMENDATIONS FOR HANDLING INSTALLATION AND TEMPORARY BRACING.) REFER TO ENGINEERED DRAWINGS FOR PERMANENT BRACING REQUIRED.

2.) ALL TRUSSES (INCLUDING TRUSSES UNDER VALLEY FRAMING) MUST BE COMPLETELY DECKED OR REFER TO DETAIL V105 FOR ALTERNATE BRACING REQUIREMENTS.

3.) ALL VALLEYS ARE TO BE CONVENTIONALLY FRAMED BY BUILDER.

4.) ALL TRUSSES ARE DESIGNED FOR 2' o.c. MAXIMUM SPACING, UNLESS OTHERWISE NOTED.

5.) ALL WALLS SHOWN ON PLACEMENT PLAN ARE CONSIDERED TO BE LOAD BEARING, UNLESS OTHERWISE NOTED.

6.) SY42 TRUSSES MUST BE INSTALLED WITH THE TOP BEING UP.

7.) ALL ROOF TRUSS HANGERS TO BE SIMPSON HUS26 UNLESS OTHERWISE NOTED. ALL FLOOR TRUSS HANGERS TO BE SIMPSON THA422 UNLESS OTHERWISE NOTED.

8.) BEAM/HEADER/LINTEL (HDR) TO BE FURNISHED BY BUILDER.

SHOP DRAWING APPROVAL

THIS LAYOUT IS THE SOLE SOURCE FOR FABRICATION OF TRUSSES AND VOIDS ALL PREVIOUS ARCHITECTURAL OR OTHER TRUSS LAYOUTS. REVIEW AND APPROVAL OF THIS LAYOUT MUST BE RECEIVED BEFORE ANY TRUSSES WILL BE BUILT. VERIFY ALL CONDITIONS TO INSURE AGAINST CHANGES THAT WILL RESULT IN EXTRA CHARGES TO YOU.

Requested Delivery Date : _____

Approved by: _____ Date: _____

Builders FirstSource

Bunnell
PHONE: 904-437-3349 FAX: 904-437-3994

Jacksonville
PHONE: 904-772-6100 FAX: 904-772-1973

Lake City
PHONE: 904-755-6894 FAX: 904-755-7973

Sanford
PHONE: 407-322-0059 FAX: 407-322-5553

BUILDER:	Cornerstone Development
LEGAL ADDRESS:	LOT 19 CSE
MODEL: THE THOMAS	REVISION:
	SCALE: NTS
DATE: 11-7-05	DRAWN BY: JRD
	JOB #: L139395