DATE 07/15/2010

Columbia County Building Permit

This Permit Must Be Prominently Posted on Premises During Construction

PERMIT
000028726

APPLICANT PEGGY EDGLEY PHONE 386.752.0580

ADDRESS 590 SW ARLINGTON BLD., STE, 113 LAKE CITY FL 3205

OWNER LANE B. & PATRICIA WATKINS PHONE 904.388.1712

ADDRESS 159 SW SYDNEY NICOLE COURT LAKE CITY FL 32024

CONTRACTOR DOUG EDGLEY PHONE 386.752.0580

LOCATION OF PROPERTY 41/441-S TO C-131,TR TO SYDNEY NICOLE CT.,TL AND IT'S 1/4 MILE ON R.

TYPE DEVELOPMENT SFD/UTILITY ESTIMATED COST OF CONSTRUCTION 220250.00

HEATED FLOOR AREA 2630.00 TOTAL AREA 4405.00 HEIGHT 19.10 STORIES 1

FOUNDATION CONC WALLS FRAMED ROOF PITCH 6'12 FLOOR CONC

LAND USE & ZONING A-3 MAX. HEIGHT 35

Minimum Set Back Requirments: STREET-FRONT 30.00 REAR 25.00 SIDE 25.00

NO. EX.D.U. 0 FLOOD ZONE X DEVELOPMENT PERMIT NO.

PARCEL ID 05-6S-17-09607-203 SUBDIVISION MELISSA'S SECRET GARDENS UNREC.

LOT C BLOCK PHASE UNIT TOTAL ACRES 10.86

Culvert Permit No.	Culvert Waiver	Contractor's License Number	Applicant/Owner/Contractor
		R282811326	Peggy Edgley

Driveway Connection	Septic Tank Number	LU & Zoning checked by	Approved for Issuance	New Resident
PRIVATE	10-0316-N	BLK	TC	Y

COMMENTS: NOC ON FILE. 1 FOOT ABOVE ROAD.

Check # or Cash 2131

FOR BUILDING & ZONING DEPARTMENT ONLY

(footer/Slab)

Temporary Power _____ date/app. by Foundation _____ date/app. by Monolithic _____ date/app. by

Under slab rough-in plumbing _____ date/app. by Slab _____ date/app. by Sheathing/Nailing _____ date/app. by

Framing _____ date/app. by Insulation _____ date/app. by

Rough-in plumbing above slab and below wood floor _____ date/app. by Electrical rough-in _____ date/app. by

Heat & Air Duct _____ date/app. by Peri. beam (Lintel) _____ date/app. by Pool _____ date/app. by

Permanent power _____ date/app. by C.O. Final _____ date/app. by Culvert _____ date/app. by

Pump pole _____ date/app. by Utility Pole _____ date/app. by M/H tie downs, blocking, electricity and plumbing _____ date/app. by

Reconnection _____ date/app. by RV _____ date/app. by Re-roof _____ date/app. by

BUILDING PERMIT FEE $ 1105.00 CERTIFICATION FEE $ 22.03 SURCHARGE FEE $ 22.03

MISC. FEES $ 0.00 ZONING CERT. FEE $ 50.00 FIRE FEE $ 0.00 WASTE FEE $

FLOOD DEVELOPMENT FEE $ FLOOD ZONE FEE $ 25.00 CULVERT FEE $ **TOTAL FEE** 1224.06

INSPECTORS OFFICE CLERKS OFFICE

NOTICE: IN ADDITION TO THE REQUIREMENTS OF THIS PERMIT, THERE MAY BE ADDITIONAL RESTRICTIONS APPLICABLE TO THIS PROPERTY THAT MAY BE FOUND IN THE PUBLIC RECORDS OF THIS COUNTY. AND THERE MAY BE ADDITIONAL PERMITS REQUIRED FROM OTHER GOVERNMENTAL ENTITIES SUCH AS WATER MANAGEMENT DISTRICTS, STATE AGENCIES, OR FEDERAL AGENCIES.

"WARNING TO OWNER: YOUR FAILURE TO RECORD A NOTICE OF COMMENCEMENT MAY RESULT IN YOUR PAYING TWICE FOR IMPROVEMENTS TO YOUR PROPERTY. IF YOU INTEND TO OBTAIN FINANCING, CONSULT WITH YOUR LENDER OR AN ATTORNEY BEFORE RECORDING YOUR NOTICE OF COMMENCEMENT."

EVERY PERMIT ISSUED SHALL BECOME INVALID UNLESS THE WORK AUTHORIZED BY SUCH PERMIT IS COMMENCED WITHIN 180 DAYS AFTER ITS ISSUANCE, OR IF THE WORK AUTHORIZED BY SUCH PERMIT IS SUSPENDED OR ABANDONED FOR A PERIOD OF 180 DAYS AFTER THE TIME THE WORK IS COMMENCED. A VALID PERMIT RECIEVES AN APPROVED INSPECTION EVERY 180 DAYS. WORK SHALL BE CONSIDERED NOT SUSPENDED, ABANDONED OR INVALID WHEN THE PERMIT HAS RECIEVED AN APPROVED INSPECTION WITHIN 180 DAYS OT THE PREVIOUS INSPECTION.

The Issuance of this Permit Does Not Waive Compliance by Permittee with Deed Restrictions.

Notice of Prevention for Subterranean Termites #28726

(As required by Florida Building Code (FBC) 104.2.6)

Live Oak PEST CONTROL, INC.
A locally owned company serving you since 1972

17856 U.S. 129 • McALPIN, FLORIDA 32062
(386) 362-3887 • 1-800-771-3887 • Fax: (386) 364-3529

Watkins Sydney Nicole Rd Lake city
Address of Treatment or Lot/Block of Treatment

9/26/10	12:00 pm	Chris Pyle
Date	Time	Applicator
Termidor	Fipronil	662
Product Used	Chemical used *(active ingredient)*	Number of gallons applied
.06	4400	370
Percent Concentration	Area treated *(square feet)*	Linear feet treated

Horizontal / Vertical
Stage of treatment *(Horizontal, Vertical, Adjoining Slab, retreat of disturbed area)*

As per 104.2.6 - If soil chemical barrier method for Subterranean termite prevention is used, final exterior treatment shall be completed prior to final building approval.

If this notice is for the final exterior treatment, initial and date this line. _____

A BOUNDARY SURVEY IN SECTION 5, TOWNSHIP 6 SOUT
RANGE 17 EAST, COLUMBIA COUNTY, FLORIDA

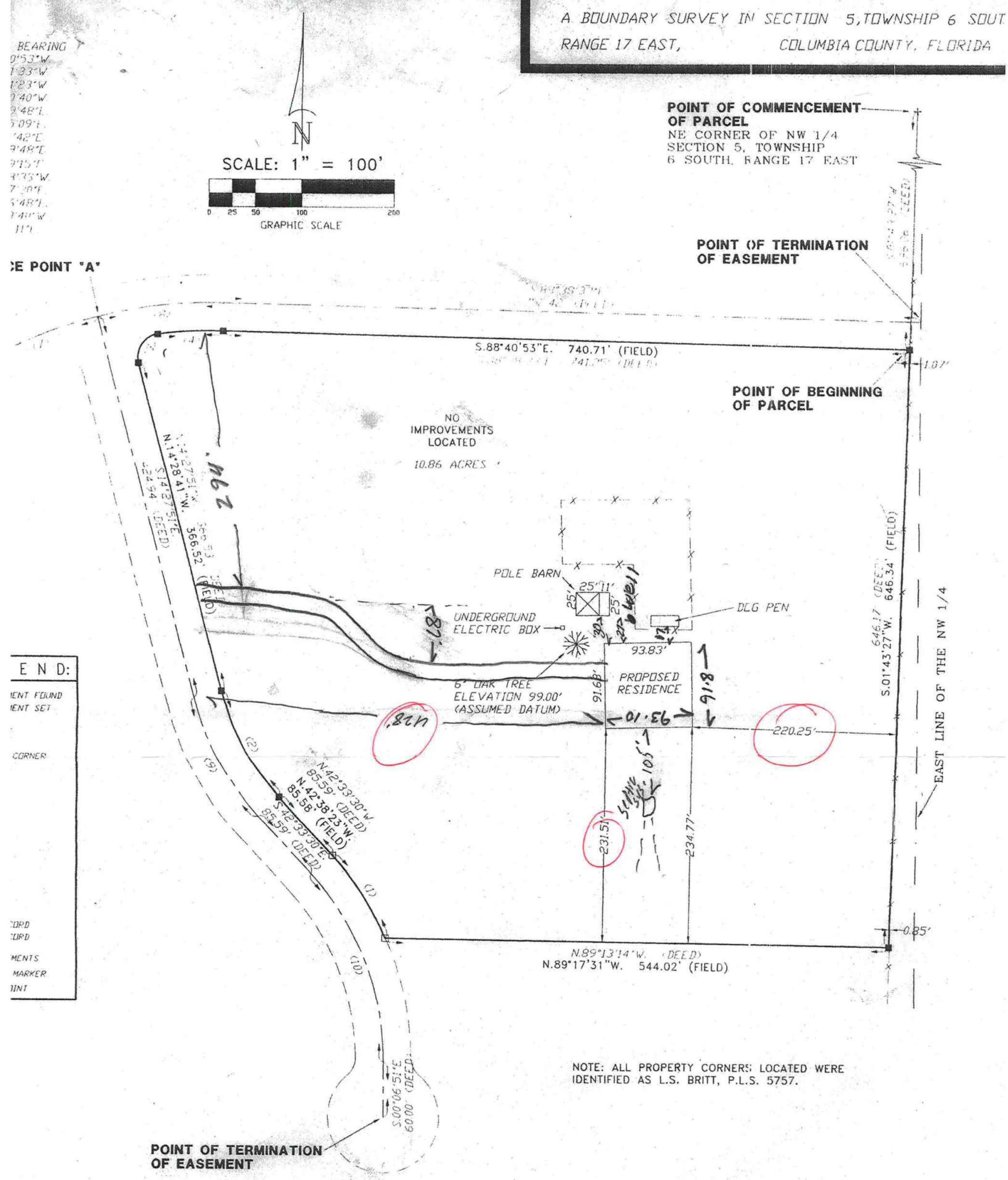

NOTE: ALL PROPERTY CORNERS LOCATED WERE IDENTIFIED AS L.S. BRITT, P.L.S. 5757.

LE CHARGE AND MEETS THE MINIMUM
ESSIONAL SURVEYORS AND MAPPERS
TION 472.027, FLORIDA STATUTES.

TT BRITT, P.S.M.
ICATION # 5757
F A FLORIDA LICENSED SURVEYOR AND
OSES ONLY AND IS NOT VALID.

BRITT SURVEYING & ASSOCIATES, INC.
LAND SURVEYORS AND MAPPERS
830 WEST DUVAL STREET
LAKE CITY, FLORIDA 32055
TELEPHONE: (386) 752-7163 FAX: (386) 752-5573

WORK ORDER # L-20425

CERTIFICATE OF

OCCUPANCY

COLUMBIA COUNTY, FLORIDA

Department of Building and Zoning Inspection

This Certificate of Occupancy is issued to the below named permit holder for the building and premises at the below named location, and certifies that the work has been completed in accordance with the Columbia County Building Code.

Parcel Number 05-6S-17-09607-203

Building permit No. 000028726

Use Classification SFD/UTILITY

Fire: 24.44

Permit Holder DOUG EDGLEY

Waste: 33.50

Owner of Building LANE B. & PATRICIA WATKINS

Total: 57.94

Location: 159 SW SYDNEY NICOLE COURT, LAKE CITY, FL 32024

Date: 08/30/2011

Building Inspector

POST IN A CONSPICUOUS PLACE
(Business Places Only)

Permit 28726

COCOON 2

The coverage chart is based on settled thickness and a nominal bag weight of 30 lbs. Use this chart for estimating purposes only. Actual coverage will be influenced by job conditions, equipment settings and application techniques. To obtain optimum performance from this product, we recommend maintaining moisture content within an 18-22% range for ceiling applications. This product is not intended for spray-applied wall applications or dry loose-fill applications. You must add water to this product.

This **attic** has been insulated to: R- 38

The **walls** have been insulated to: R- 13

The **floors** have been insulated to: R-

Insulation has been installed to the R-value indicated above, with Cocoon, the high-efficiency insulation. Made from a minimum of 80% recycled materials, Cocoon is scientifically formulated to deliver greater efficiency per inch than other insulation materials.

R-Value is a measure of resistance to heat flow – the higher the R-value, the greater the insulation power.

If you would like to add more insulation to your home, contact your Cocoon dealer.

Residence Address: Watkins
159 SW Sydney Nicole Court
Lake City Fl 32024

Installed by: Sikes Enviroseal Insulation Inc.

Builder Company Name: Edgley Construction
Builder Signature: [signature]

Date: 8-31-11

Cocoon2 Stabilized Insulation - 30 lb. bag Product # INS500

R-Value (at 75°F Mean Temperature)	Minimum Thickness (Inches)		Maximum Net Coverage (No Allowance for Framing)		
To Obtain a Thermal Resistance (R) of	Installed Insulation Should Not Be Less Than	Thickness After Settling	Maximum Square Feet per Bag	Minimum Bags per 1,000 Square Feet	Minimum Weight Square Feet (lbs.
R-11	3.06	2.97	125.9	7.9	0.238
R-13	3.62	3.51	100.2	10.0	0.299
R-19	5.29	5.14	60.4	16.6	0.497
R-20	5.57	5.41	56.5	17.7	0.531
R-21	5.85	5.68	53.0	18.9	0.566
R-22	6.13	5.95	49.9	20.1	0.602
R-24	6.69	6.49	44.5	22.5	0.674
R-30	8.36	8.11	33.4	29.9	0.897
R-32	8.92	8.65	30.8	32.5	0.974
R-38	10.59	10.27	24.8	40.3	1.210
R-40	11.15	10.81	23.2	43.0	1.291
R-44	12.26	11.89	20.6	48.5	1.454
R-48	13.37	12.97	18.5	54.0	1.621
R-50	13.93	13.51	17.6	56.8	1.705
R-60	16.72	16.22	14.0	71.2	2.136

CERTIFICATION

Attic: Cocoon2, manufactured by GreenFiber.
This is to certify that the attic insulation has been installed in conformance with the coverage chart recommendations above using 110 bags to cover 2630 sq. ft. to obtain an R-value of 38.

Walls: Cocoon2 Stabilized Borate Formula, manufactured by GreenFiber.
This is to certify that the wall insulation has been installed in conformance with the manufacturer's recommendations to obtain the R-value of _____.

Walls and Floors: Type of insulation _____ Manufacturer _____.
This is to certify that the wall and floor insulations have been installed in conformance with the manufacturer's recommendations to obtain the R-Values noted above.

Installer Company Name: Sikes Enviroseal Insulation Inc
Installer Authorized Signature: [signature]

Date: 8-31-11

Manufactured in:
- Albany, NY
- Atlanta, GA
- Charlotte, NC
- Denver, CO
- Delphos, OH
- Elkwood, VA
- E. St. Louis, IL
- Norfolk, NE
- Phoenix, AZ
- Salt Lake City, UT
- Sacramento, CA
- Tampa, FL
- Waco, TX

greenfiber
ph. 800-228-0024
www.greenfiber.com

28726

Land Surveyors
and Mappers

BRITT SURVEYING & ASSOCIATES

830 West Duval Street • Lake City, FL 32055
Phone (386) 752-7163 • Fax (386) 752-5573

OK
BLK
05.10.10

10/05/10

L-20425

To Whom It May Concern:

C/o: Edgely Construction

Re: Parcel C Melissa's Secret Garden Phase 2

The elevation of the finished floor of the slab is found to be 100.70 feet. The minimum floor elevation as per the Columbia County Building Department is established to be 100.00 feet. The highest adjacent grade on the proposed building area is 99.2 feet and the lowest adjacent grade is 99.1 feet. The engineering plans used to establish the minimum floor elevation for this parcel is based on an assumed datum and therefore our survey was converted to the same datum to establish this elevation.

L. Scott Britt
PLS #5757

Columbia County Building Permit Application ☑ Need liability on 546

For Office Use Only Application # 1007-12 Date Received 7-9-10 By LH Permit # 28726

Zoning Official BLK Date 15.07.10 Flood Zone X Land Use A-3 Zoning A-3

FEMA Map # N/A Elevation N/A MFE 1' above Rd River N/A Plans Examiner J.C. Date 7-14-10

Comments

☑ NOC ☑ EH ☑ Deed or PA ☑ Site Plan ☑ State Road Info ☐ Parent Parcel #

☐ Dev Permit # ☐ In Floodway ☐ Letter of Auth. from Contractor ☑ NA W Comp. letter

IMPACT FEES: EMS Fire Corr Road/Code

School = TOTAL N/A Suspended ☑ App fee paid ☑ V+F form

Septic Permit No. 10-0316N "PEGGY EDGLEY" Fax 386-752-4904

Name Authorized Person Signing Permit Kimmy Edgley Phone 386-752-0580

Address 590 SW Arlinton Blvd Suite 113 Lake City Fl 32025

Owners Name Lane B and Patricia A Watkins Phone 904-388-1712

911 Address 159 SW Sydney Nicole Court, Lake City Fl 32024

DOUG EDGLEY

Contractors Name Edgley Construction Co Div CEE BAS Inc. Phone 386-752-0580

Address 590 SW Arlington Blvd Suite 113 Lake City Fl 32025

Fee Simple Owner Name & Address Lane B. and Patricia A. Watkins

Bonding Co. Name & Address N/A

Architect/Engineer Name & Address Mark Disosway PE P.O. Box 868 Lake City Fl 32056

Mortgage Lenders Name & Address N/A

Circle the correct power company – FL Power & Light – (Clay Elec.) – Suwannee Valley Elec. – Progress Energy

Property ID Number 05-6S-17-09607-203 Estimated Cost of Construction $420,000

Subdivision Name Melissa's Secret Gardens Unre Lot C Block Unit Phase

Driving Directions Hwy 41 S, TR ON Tustenuggee TL on Sydney Nicole CT Lot 1/4 mile on right

Number of Existing Dwellings on Property 0 Pole Barn

Construction of Residential Home "Private" Total Acreage 10.86 Lot Size

Do you need a - Culvert Permit or Culvert Waiver or (Have an Existing Drive) Total Building Height 19'10"

Actual Distance of Structure from Property Lines - Front 428 Side 234.77 Side 319.77 Rear 220.25

Number of Stories 1 Heated Floor Area 2630 Total Floor Area 4405 Roof Pitch 6/12

Application is hereby made to obtain a permit to do work and installations as indicated. I certify that no work or installation has commenced prior to the issuance of a permit and that all work be performed to meet the standards of all laws regulating construction in this jurisdiction.

CK# 2131

JW Spoke w/ Kimmy 7.15.10

Columbia County Building Permit Application

TIME LIMITATIONS OF APPLICATION : An application for a permit for any proposed work shall be deemed to have been abandoned 180 days after the date of filing, unless such application has been pursued in good faith or a permit has been issued; except that the building official is authorized to grant one or more extensions of time for additional periods not exceeding 90 days each. The extension shall be requested in writing and justifiable cause demonstrated.

TIME LIMITATIONS OF PERMITS: Every permit issued shall become invalid unless the work authorized by such permit is commenced within 180 days after its issuance, or if the work authorized by such permit is suspended or abandoned for a period of 180 days after the time work is commenced. A valid permit receives an approved inspection every 180 days. Work shall be considered not suspended, abandoned or invalid when the permit has received an approved inspection within 180 days of the previous approved inspection.

FLORIDA'S CONSTRUCTION LIEN LAW: Protect Yourself and Your Investment: According to Florida Law, those who work on your property or provide materials, and are not paid-in-full, have a right to enforce their claim for payment against your property. This claim is known as a construction lien. If your contractor fails to pay subcontractors or material suppliers or neglects to make other legally required payments, the people who are owed money may look to your property for payment, even if you have paid your contractor in full.
This means if a lien is filed against your property, it could be sold against your will to pay for labor, materials or other services which your contractor may have failed to pay.

NOTICE OF RESPONSIBILITY TO BUILDING PERMITEE: ***YOU ARE HEREBY NOTIFIED*** as the recipient of a building permit from Columbia County, Florida, you will be held responsible to the County for any damage to sidewalks and/or road curbs and gutters, concrete features and structures, together with damage to drainage facilities, removal of sod, major changes to lot grades that result in ponding of water, or other damage to roadway and other public infrastructure facilities caused by you or your contractor, subcontractors, agents or representatives in the construction and/or improvement of the building and lot for which this permit is issued. No certificate of occupancy will be issued until all corrective work to these public infrastructures and facilities has been corrected.

WARNING TO OWNER: YOUR FAILURE TO RECORD A NOTICE OF COMMENCMENT MAY RESULT IN YOU PAYING TWICE FOR IMPROVEMENTS TO YOUR PROPERTY. A NOTICE OF COMMENCEMENT MUST BE RECORDED AND POSTED ON THE JOB SITE BEFORE THE FIRST INSPECTION. IF YOU INTEND TO OBTAIN FINANCING, CONSULT WITH YOUR LENDER OR ATTORNEY BEFORE RECORDING YOUR NOTICE OF COMMENCEMENT.

OWNERS CERTIFICATION: I CERTIFY THAT ALL THE FOREGOING INFORMATION IS ACCURATE AND THAT ALL WORK WILL BE DONE IN COMPLIANCE WITH ALL APPLICABLE LAWS REGULATING CONSTRUCTION AND ZONING.

NOTICE TO OWNER: There are some properties that may have deed restrictions recorded upon them. These restrictions may limit or prohibit the work applied for in your building permit. It may be to your advantage to check and see if your property is encumbered by any restrictions.

(Owners Must Sign All Applications Before Permit Issuance.)

Jane Walthni

Owners Signature ****OWNER BUILDERS MUST PERSONALLY APPEAR AND SIGN THE BUILDING PERMIT.**

CONTRACTORS AFFIDAVIT: By my signature I understand and agree that I have informed and provided this written statement to the owner of all the above written responsibilities in Columbia County for obtaining this Building Permit including all application and permit time limitations.

Dayler E Eff

Contractor's Signature (Permitee)

Contractor's License Number RR282811326

Columbia County Competency Card Number 44

Affirmed under penalty of perjury to by the Contractor and subscribed before me this 2nd **day of** July **20**10.

Personally known ✓ **or Produced Identification** _____

Nanci Brinkley

State of Florida Notary Signature (For the Contractor)

SEAL:

NANCI L. BRINKLEY
MY COMMISSION # DD 932450
EXPIRES: December 26, 2013
Bonded Thru Notary Public Underwriters

SUBCONTRACTOR VERIFICATION FORM

APPLICATION NUMBER 1007-12 CONTRACTOR Edgley Construction PHONE 752-0580

THIS FORM MUST BE SUBMITTED PRIOR TO THE ISSUANCE OF A PERMIT

In Columbia County one permit will cover all trades doing work at the permitted site. It is REQUIRED that we have records of the subcontractors who actually did the trade specific work under the permit. Per Florida Statute 440 and Ordinance 89-6, a contractor shall require all subcontractors to provide evidence of workers' compensation or exemption, general liability insurance and a valid Certificate of Competency license in Columbia County.

Any changes, the permitted contractor is responsible for the corrected form being submitted to this office prior to the start of that subcontractor beginning any work. Violations will result in stop work orders and/or fines.

ELECTRICAL 37	Print Name Donald Hollingsworth License #: EC 13012377	Signature Phone #: 386-755-5944
MECHANICAL/ A/C _____	Print Name License #:	Signature Phone #:
PLUMBING/ GAS 714	Print Name Mark Bairs License #: CFCO 57219	Signature Phone #: 752-8656
ROOFING	Print Name License #:	Signature Phone #:
SHEET METAL	Print Name License #:	Signature Phone #:
FIRE SYSTEM/ SPRINKLER	Print Name License#:	Signature Phone #:
SOLAR	Print Name License #:	Signature Phone #:

Specialty License	License Number	Sub-Contractors Printed Name	Sub-Contractors Signature
MASON	000097	Kenneth Louden	
CONCRETE FINISHER	000028	Butch VAughn	
FRAMING 602	CRCO 22354	William J Gearney	
INSULATION	000240	Willis W. Sikes	
~~STUCCO~~			
DRYWALL	000621	JESSE AMBROS	
~~PLASTER~~			
CABINET INSTALLER	000762	STEVE BORDEAUX	
PAINTING	000632	JOHN BISPHAM	
~~ACOUSTICAL CEILING~~			
GLASS	000618	CARL BULLARD JR	
CERAMIC TILE	000214	JAMES A. RIX JR	
FLOOR COVERING			
ALUM/VINYL SIDING CC	000166	MIKE NICHOLSON/MIKE'S ALUM.	
GARAGE DOOR	000619	CARL BULLARD JR	
~~METAL BLDG ERECTOR~~			

F. S. 440.103 Building permits; identification of minimum premium policy.--Every employer shall, as a condition to applying for and receiving a building permit, show proof and certify to the permit issuer that it has secured compensation for its employees under this chapter as provided in ss. 440.10 and 440.38, and shall be presented each time the employer applies for a building permit.

SUBCONTRACTOR VERIFICATION FORM

APPLICATION NUMBER 1007-12 CONTRACTOR Edgley Construction PHONE 752-0580

THIS FORM MUST BE SUBMITTED PRIOR TO THE ISSUANCE OF A PERMIT

In Columbia County one permit will cover all trades doing work at the permitted site. It is REQUIRED that we have records of the subcontractors who actually did the trade specific work under the permit. Per Florida Statute 440 and Ordinance 89-6, a contractor shall require all subcontractors to provide evidence of workers' compensation or exemption, general liability insurance and a valid Certificate of Competency license in Columbia County.

Any changes, the permitted contractor is responsible for the corrected form being submitted to this office prior to the start of that subcontractor beginning any work. Violations will result in stop work orders and/or fines.

ELECTRICAL	Print Name License #:	Signature Phone #:
MECHANICAL/ A/C _____	Print Name License #:	Signature Phone #:
PLUMBING/ GAS	Print Name License #:	Signature Phone #:
ROOFING	Print Name License #:	Signature Phone #:
SHEET METAL	Print Name License #:	Signature Phone #:
FIRE SYSTEM/ SPRINKLER	Print Name License#:	Signature Phone #:
SOLAR	Print Name License #:	Signature Phone #:

Specialty License	License Number	Sub-Contractors Printed Name	Sub-Contractors Signature
MASON			
CONCRETE FINISHER			
FRAMING			
INSULATION			
STUCCO			
DRYWALL			
PLASTER			
CABINET INSTALLER			
PAINTING			
ACOUSTICAL CEILING			
GLASS			
CERAMIC TILE	~~[illegible]~~	~~[illegible]~~	~~[illegible]~~
FLOOR COVERING	CL 546	Ryan Hardin (Ryans Flooring)	Ryan Hardin Need Liability
ALUM/VINYL SIDING			
GARAGE DOOR			
METAL BLDG ERECTOR			

S. 440.103 Building permits; identification of minimum premium policy.--Every employer shall, as a condition to plying for and receiving a building permit, show proof and certify to the permit issuer that it has secured mpensation for its employees under this chapter as provided in ss. 440.10 and 440.38, and shall be presented each ne the employer applies for a building permit.

SUBCONTRACTOR VERIFICATION FORM

APPLICATION NUMBER 1807-12 CONTRACTOR Edgley Construction PHONE 752-0580

THIS FORM MUST BE SUBMITTED PRIOR TO THE ISSUANCE OF A PERMIT

In Columbia County one permit will cover all trades doing work at the permitted site. It is REQUIRED that we have records of the subcontractors who actually did the trade specific work under the permit. Per Florida Statute 440 and Ordinance 89-6, a contractor shall require all subcontractors to provide evidence of workers' compensation or exemption, general liability insurance and a valid Certificate of Competency license in Columbia County.

Any changes, the permitted contractor is responsible for the corrected form being submitted to this office prior to the start of that subcontractor beginning any work. Violations will result in stop work orders and/or fines.

ELECTRICAL	Print Name License #:	Signature Phone #:
MECHANICAL/ A/C	Print Name Chris Williams License #: CAC057295	Signature Phone #: 386 752-5841
PLUMBING/ GAS	Print Name License #:	Signature Phone #:
ROOFING 512	Print Name John W. O'Neal License #: CCC016346	Signature Phone #: 386-752-7528
SHEET METAL	Print Name License #:	Signature Phone #:
FIRE SYSTEM/ SPRINKLER	Print Name License#:	Signature Phone #:
SOLAR	Print Name License #:	Signature Phone #:

Specialty License	License Number	Sub-Contractors Printed Name	Sub-Contractors Signature
MASON			
CONCRETE FINISHER			
FRAMING			
INSULATION			
STUCCO			
DRYWALL			
PLASTER			
CABINET INSTALLER			
PAINTING			
ACOUSTICAL CEILING			
GLASS			
CERAMIC TILE			
FLOOR COVERING			
ALUM/VINYL SIDING			
GARAGE DOOR			
METAL BLDG ERECTOR			

S. 440.103 Building permits; identification of minimum premium policy.--Every employer shall, as a condition to applying for and receiving a building permit, show proof and certify to the permit issuer that it has secured compensation for its employees under this chapter as provided in ss. 440.10 and 440.38, and shall be presented each time the employer applies for a building permit.

Application # 1007-12

NOTICE OF COMMENCEMENT

Inst:201012010941 Date:7/9/2010 Time:3:37 PM
DC,P.DeWitt Cason,Columbia County Page 1 of 2 B.1197 P.1497

THE UNDERSIGNED hereby gives notice that improvement will be made to certain real property; and in accordance with Chapter 713, Florida Statues, the following information is provided in the **Notice of Commencement.**

Tax Parcel ID Number: 05-6S-17-09607-203

1. **Description of property:** See Exhibit A attached hereto
2. **General Description of Improvement:** Construction of Dwelling
3. **Owner Information:**
   a. Name and Address:Lane B and Patricia A Watkins, 4115 Timuquana Rd, Jacksonville Fl 32210
   b. Interest in property: Fee Simple
   c. Name and address of fee simple title holder (if other than Owner): NONE
4. **Contractor** (name and address): Edgley Construction Company div of CEE-BAS Inc., 590 SW Arlington Blvd, Suite 113, Lake City, Fl 32025
5. **Surety:**
   a. Name and Address: N/A
   b. Amount of Bond: N/A
6. **Lender:** N/A
7. Persons within the State of Florida designated by Owner upon whom notices of Other documents may be served as provided in Section 713.13(1)(a)7., Florida Statues: NONE
8. In addition to himself, Owner designates KIMMY EDGLEY, of EDGLEY CONSTRUCTION COMPANY, at 590 SW Arlington Blvd, Suite 113, Lake City, Fl 32025, to receive a copy of Lienor's Notice as provided in Section 713.13(1)(b) Florida Statues.
9. Expiration date of Notice of Commencement (the expiration date is 1 year from date of recording unless a different date is specified).

WARNING TO OWNER: Any payments made by the owner after the expiration of the Notice of Commencement are considered improper payments under Chapter 713, Part I, Section 713.13, Florid Statutes, and can result in your paying twice for improvements to your property; a Notice of Commencement must be recorded and posted on the job site before the first inspection, if you intend to obtain financing, consult your lender or an attorney before commencing work or recording your notice of commencement.

STATE OF FLORIDA
COUNTY OF COLUMBIA

10. Lane B. Watkins
Signature of Owner or Owners Authorized Office/Director/Partner/Manager
Patricia A. Watkins
Signature (see above)

The foregoing instrument was acknowledged before me this 9 of JUNE 2010, by Lane B and Patricia A Watkins, who are known to me or who have produced FL/DL as identification.

(seal)

CRISTA M THOMAS
Notary Public - State of Florida
My Comm. Expires Feb 14, 2014
Commission # DD 955577

NOTARY PUBLIC
My Commission Expires: 2/14/14

11. Verification Pursuant to Section 92.525 Florida Statutes, under penalty of perjury, I declare and I have read the foregoing and that the facts stated in it are true to the best of my knowledge and belief.

Lane B. Watkins
Signature of Person Signing(Line #10)
Patricia A. Watkins
Signature of Person Signing (Line#10)

Application # 1007-12

Exhibit "A"

PARCEL C, UNIT 2, OF THAT UNRECORDED SUBDIVISION OF MELISSA'S SECRET GARDEN, COLUMBIA COUNTY, FLORIDA, MORE PARTICULARLY DESCRIBED AS FOLLOWS:
COMMENCE AT THE NORTHEAST CORNER OF THE NORTHWEST 1/4 OF SECTION 5, TOWNSHIP 6 SOUTH, RANGE 17 EAST, COLUMBIA COUNTY, FLORIDA, AND RUN THENCE SOUTH 01°43'27" WEST, 696.06 FEET TO THE POINT OF BEGINNING; THENCE CONTINUE SOUTH 01°43'27" WEST, 646.17 FEET; THENCE NORTH 89°13'14" WEST, 544.02 FEET TO A POINT ON THE EAST RIGHT-OF-WAY OF A 60 FOOT EASEMENT, SAID POINT BEING ON A CURVE OF A CURVE TO THE LEFT HAVING A RADIUS OF 330.00 FEET, AN INCLUDED ANGLE OF 18°23'55", A CHORD BEARING OF NORTH 33°21'33" WEST, AND A CHORD DISTANCE OF 105.51 FEET; THENCE NORTHWESTERLY ALONG THE ARC OF SAID CURVE FOR AN ARC DISTANCE OF 105.97 FEET; THENCE NORTH 42°33'30" WEST, 85.59 FEET TO THE POINT OF CURVE OF A CURVE TO THE RIGHT HAVING A RADIUS OF 270.00 FEET, AN INCLUDED ANGLE OF 28°05'40", A CHORD BEARING OF N.28° 30'40" WEST, AND A CHORD DISTANCE OF 131.07 FEET; THENCE NORTHWESTERLY ALONG THE ARC OF SAID CURVE FOR AN ARC DISTANCE OF 132.39 FEET; THENCE NORTH 14°27'51" WEST, 366.53 FEET TO THE POINT OF CURVE OF A CURVE TO THE RIGHT HAVING A RADIUS OF 25.00 FEET, AN INCLUDED ANGLE OF 97°05'59", A CHORD BEARING OF NORTH 34°05'09" EAST, AND A CHORD DISTANCE OF 37.48 FEET; THENCE NORTHEASTERLY ALONG THE ARC OF SAID CURVE FOR AN ARC DISTANCE OF 42.37 FEET TO A POINT OF COMPOUND CURVE OF A CURVE TO THE RIGHT HAVING A RADIUS OF 470.00 FEET, AN INCLUDED ANGLE OF 08°43'19", A CHORD BEARING OF NORTH 86°59'48" EAST, AND A CHORD DISTANCE OF 71.48 FEET; THENCE ALONG THE ARC OF SAID CURVE FOR AN ARC DISTANCE OF 71.55 FEET TO THE END OF SAID CURVE; THENCE SOUTH 88°38'33" EAST, 741.25 FEET TO THE POINT OF BEGINNING, COLUMBIA COUNTY, FLORIDA.

TOGETHER WITH AN EASEMENT FOR INGRESS AND EGRESS OVER THE FOLLOWING DESCRIBED LAND:

A PARCEL OF LAND BEING 60.00 FEET WIDE AND BEING 30.00 FEET TO THE RIGHT AND 30.00 FEET TO THE LEFT OF THE FOLLOWING DESCRIBED LINE:
COMMENCE AT THE NORTHWEST CORNER OF SECTION 5, TOWNSHIP 6 SOUTH, RANGE 17 EAST, COLUMBIA COUNTY, FLORIDA, AND RUN THENCE SOUTH 89°32'21" EAST, ALONG THE NORTH LINE 40.00 FEET TO THE EAST RIGHT OF WAY OF STATE ROAD #131; THENCE SOUTH 00°22'40" WEST ALONG SAID RIGHT OF WAY, 612.00 FEET TO THE POINT OF BEGINNING OF SAID LINE; THENCE NORTH 89°47'20" EAST 798.23 FEET TO A POINT OF CURVE OF A CURVE TO THE RIGHT HAVING A RADIUS OF 500.00 FEET AND AN INCLUDED ANGLE OF 31°38'36"; THENCE SOUTHEASTERLY ALONG THE ARC OF SAID CURVE FOR AN ARC DISTANCE OF 276.14 FEET TO THE POINT OF REVERSE CURVE HAVING A RADIUS OF 500.00 FEET AND AN INCLUDED ANGLE OF 63°17'12"; THENCE SOUTHEASTERLY THEN EASTERLY THEN NORTHEASTERLY ALONG THE ARC OF SAID CURVE FOR AN ARC DISTANCE OF 552.28 FEET TO THE POINT OF REVERSE CURVE HAVING A RADIUS OF 500.00 FEET AND A TOTAL INCLUDED ANGLE OF 15°49'18"; THENCE NORTHEASTERLY ALONG THE ARC OF SAID CURVE FOR AN ARC DISTANCE OF 138.07 FEET TO A POINT HEREIN KNOWN AS POINT "A"; THENCE CONTINUE ALONG SAID CURVE HAVING A RADIUS OF 500.00 FEET AND AN INCLUDED ANGLE OF 15°49'18"; THENCE NORTHEASTERLY ALONG THE ARC OF SAID CURVE FOR AN ARC DISTANCE OF 138.07 TO THE END OF SAID CURVE; THENCE SOUTH 88°38'33" EAST, 752.42 FEET TO THE EAST LINE OF THE NW 1/4 OF SAID SECTION 5 AND THE POINT OF TERMINATION OF SAID LINE;
THENCE BEGIN AT PREVIOUSLY SAID POINT "A" AND RUN THENCE SOUTH 14°27'51" EAST, 424.94 FEET TO THE POINT OF CURVE OF A CURVE TO THE LEFT HAVING A RADIUS OF 300.00 FEET AND AN INCLUDED ANGLE OF 28°05'40"; THENCE SOUTHEASTERLY ALONG THE ARC OF SAID CURVE FOR AN ARC DISTANCE OF 147.10 FEET, THENCE SOUTH 42°33'30" EAST, 85.59 FEET TO THE POINT OF CURVE OF A CURVE TO THE RIGHT HAVING A RADIUS OF 300.00 FEET AND AN INCLUDED ANGLE OF 42°26'39"; THENCE SOUTHEASTERLY THEN SOUTHERLY ALONG THE ARC OF SAID CURVE FOR AN ARC DISTANCE OF 222.24 FEET; THENCE SOUTH 00°06'51" EAST, 60.00 FEET TO THE POINT OF TERMINATION, SAID POINT BEING THE RADIUS POINT OF A 60-FOOT CUL-DE-SAC HAVING 25.00-FOOT TANGENT RETURNS.

This Document Prepared By and Return to:
Darryl J. Tompkins, Esquire
Darryl J. Tompkins, P.A.
14420 NW 151st Blvd.
P.O. Box 519
Alachua, FL 32616

Parcel ID Number: R09607-203

Inst:200812015024 Date:8/12/2008 Time:2:59 PM
Doc Stamp-Deed:651.00
DC,P.DeWitt Cason,Columbia County Page 1 of 2 B:1156 P:1132

Warranty Deed

This Indenture, Made this day of August, 2008 A.D., **Between** Bruce M. Jamison and Glenda T. Jamison, husband and wife

of the County of Lee, State of Florida, **grantors,** and Lane B. Watkins and Patricia A. Watkins, husband and wife

whose address is: 4115 Timuquana Road, Jacksonville, FL 32210

of the County of Duval, State of Florida, **grantees.**

Witnesseth that the GRANTORS, for and in consideration of the sum of ----------TEN DOLLARS ($10)---------- DOLLARS, and other good and valuable consideration to GRANTORS in hand paid by GRANTEES, the receipt whereof is hereby acknowledged, have granted, bargained and sold to the said GRANTEES and GRANTEES' heirs, successors and assigns forever, the following described land, situate, lying and being in the County of Columbia State of Florida to wit:

See Exhibit "A" attached hereto.

SUBJECT TO THE FOLLOWING:

A. Zoning restrictions, prohibitions and other requirements imposed by governmental authority;
B. Restrictions and matters appearing on the plat and/or common to the subdivision;
C. Taxes for the year 2008 and subsequent years.

and the grantors do hereby fully warrant the title to said land, and will defend the same against lawful claims of all persons whomsoever.

In Witness Whereof, the grantors have hereunto set their hands and seals the day and year first above written.

Signed, sealed and delivered in our presence:

Kip C. Gaillard
Printed Name: Kip C. Gaillard
Witness

Carol A. Jurek
Printed Name: Carol A. Jurek
Witness

Bruce M. Jamison (Seal)
P.O. Address: 9101 Kings Cove Court, Ft. Myers, FL 33967

Glenda T. Jamison (Seal)
P.O. Address: 9101 Kings Cove Court, Ft. Myers, FL 33967

STATE OF Florida
COUNTY OF Lee

The foregoing instrument was acknowledged before me this day of August, 2008 by Bruce M. Jamison and Glenda T. Jamison, husband and wife

who are personally known to me or who have produced the Florida driver's license as identification.

CAROL A. JUREK MY COMMISSION EXPIRES April 2, 2012 #DD 612283 Bonded Thru Notary Public Underwriters NOTARY PUBLIC

Carol A. Jurek
Printed Name: Carol A Jurek
Notary Public
My Commission Expires:

JAMISON08-75

Exhibit "A"

PARCEL C, UNIT 2, OF THAT UNRECORDED SUBDIVISION OF MELISSA'S SECRET GARDEN, COLUMBIA COUNTY, FLORIDA, MORE PARTICULARLY DESCRIBED AS FOLLOWS: COMMENCE AT THE NORTHEAST CORNER OF THE NORTHWEST 1/4 OF SECTION 5, TOWNSHIP 6 SOUTH, RANGE 17 EAST, COLUMBIA COUNTY, FLORIDA, AND RUN THENCE SOUTH 01°43'27" WEST, 696.06 FEET TO THE POINT OF BEGINNING; THENCE CONTINUE SOUTH 01°43'27" WEST, 646.17 FEET; THENCE NORTH 89°13'14" WEST, 544.02 FEET TO A POINT ON THE EAST RIGHT-OF-WAY OF A 60 FOOT EASEMENT, SAID POINT BEING ON A CURVE OF A CURVE TO THE LEFT HAVING A RADIUS OF 330.00 FEET, AN INCLUDED ANGLE OF 18°23'55", A CHORD BEARING OF NORTH 33°21'33" WEST, AND A CHORD DISTANCE OF 105.51 FEET; THENCE NORTHWESTERLY ALONG THE ARC OF SAID CURVE FOR AN ARC DISTANCE OF 105.97 FEET; THENCE NORTH 42°33'30" WEST, 85.59 FEET TO THE POINT OF CURVE OF A CURVE TO THE RIGHT HAVING A RADIUS OF 270.00 FEET, AN INCLUDED ANGLE OF 28°05'40", A CHORD BEARING OF N.28° 30'40" WEST, AND A CHORD DISTANCE OF 131.07 FEET; THENCE NORTHWESTERLY ALONG THE ARC OF SAID CURVE FOR AN ARC DISTANCE OF 132.39 FEET; THENCE NORTH 14°27'51" WEST, 366.53 FEET TO THE POINT OF CURVE OF A CURVE TO THE RIGHT HAVING A RADIUS OF 25.00 FEET, AN INCLUDED ANGLE OF 97°05'59", A CHORD BEARING OF NORTH 34°05'09" EAST, AND A CHORD DISTANCE OF 37.48 FEET; THENCE NORTHEASTERLY ALONG THE ARC OF SAID CURVE FOR AN ARC DISTANCE OF 42.37 FEET TO A POINT OF COMPOUND CURVE OF A CURVE TO THE RIGHT HAVING A RADIUS OF 470.00 FEET, AN INCLUDED ANGLE OF 08°43'19", A CHORD BEARING OF NORTH 86°59'48" EAST, AND A CHORD DISTANCE OF 71.48 FEET; THENCE ALONG THE ARC OF SAID CURVE FOR AN ARC DISTANCE OF 71.55 FEET TO THE END OF SAID CURVE; THENCE SOUTH 88°38'33" EAST, 741.25 FEET TO THE POINT OF BEGINNING, COLUMBIA COUNTY, FLORIDA.

TOGETHER WITH AN EASEMENT FOR INGRESS AND EGRESS OVER THE FOLLOWING DESCRIBED LAND:

A PARCEL OF LAND BEING 60.00 FEET WIDE AND BEING 30.00 FEET TO THE RIGHT AND 30.00 FEET TO THE LEFT OF THE FOLLOWING DESCRIBED LINE:
COMMENCE AT THE NORTHWEST CORNER OF SECTION 5, TOWNSHIP 6 SOUTH, RANGE 17 EAST, COLUMBIA COUNTY, FLORIDA, AND RUN THENCE SOUTH 89°32'21" EAST, ALONG THE NORTH LINE 40.00 FEET TO THE EAST RIGHT OF WAY OF STATE ROAD #131; THENCE SOUTH 00°22'40" WEST ALONG SAID RIGHT OF WAY, 612.00 FEET TO THE POINT OF BEGINNING OF SAID LINE; THENCE NORTH 89°47'20" EAST 798.23 FEET TO A POINT OF CURVE OF A CURVE TO THE RIGHT HAVING A RADIUS OF 500.00 FEET AND AN INCLUDED ANGLE OF 31°38'36"; THENCE SOUTHEASTERLY ALONG THE ARC OF SAID CURVE FOR AN ARC DISTANCE OF 276.14 FEET TO THE POINT OF REVERSE CURVE HAVING A RADIUS OF 500.00 FEET AND AN INCLUDED ANGLE OF 63°17'12"; THENCE SOUTHEASTERLY THEN EASTERLY THEN NORTHEASTERLY ALONG THE ARC OF SAID CURVE FOR AN ARC DISTANCE OF 552.28 FEET TO THE POINT OF REVERSE CURVE HAVING A RADIUS OF 500.00 FEET AND A TOTAL INCLUDED ANGLE OF 15°49'18"; THENCE NORTHEASTERLY ALONG THE ARC OF SAID CURVE FOR AN ARC DISTANCE OF 138.07 FEET TO A POINT HEREIN KNOWN AS POINT "A"; THENCE CONTINUE ALONG SAID CURVE HAVING A RADIUS OF 500.00 FEET AND AN INCLUDED ANGLE OF 15°49'18"; THENCE NORTHEASTERLY ALONG THE ARC OF SAID CURVE FOR AN ARC DISTANCE OF 138.07 TO THE END OF SAID CURVE; THENCE SOUTH 88°38'33" EAST, 752.42 FEET TO THE EAST LINE OF THE NW 1/4 OF SAID SECTION 5 AND THE POINT OF TERMINATION OF SAID LINE; THENCE BEGIN AT PREVIOUSLY SAID POINT "A" AND RUN THENCE SOUTH 14°27'51" EAST, 424.94 FEET TO THE POINT OF CURVE OF A CURVE TO THE LEFT HAVING A RADIUS OF 300.00 FEET AND AN INCLUDED ANGLE OF 28°05'40"; THENCE SOUTHEASTERLY ALONG THE ARC OF SAID CURVE FOR AN ARC DISTANCE OF 147.10 FEET, THENCE SOUTH 42°33'30" EAST, 85.59 FEET TO THE POINT OF CURVE OF A CURVE TO THE RIGHT HAVING A RADIUS OF 300.00 FEET AND AN INCLUDED ANGLE OF 42°26'39"; THENCE SOUTHEASTERLY THEN SOUTHERLY ALONG THE ARC OF SAID CURVE FOR AN ARC DISTANCE OF 222.24 FEET; THENCE SOUTH 00°06'51" EAST, 60.00 FEET TO THE POINT OF TERMINATION, SAID POINT BEING THE RADIUS POINT OF A 60-FOOT CUL-DE-SAC HAVING 25.00-FOOT TANGENT RETURNS.

Application for Onsite Sewage Disposal System Construction Permit. Part II Site Plan

Permit Application Number: 10-0316

ALL CHANGES MUST BE APPROVED BY THE COUNTY HEALTH UNIT

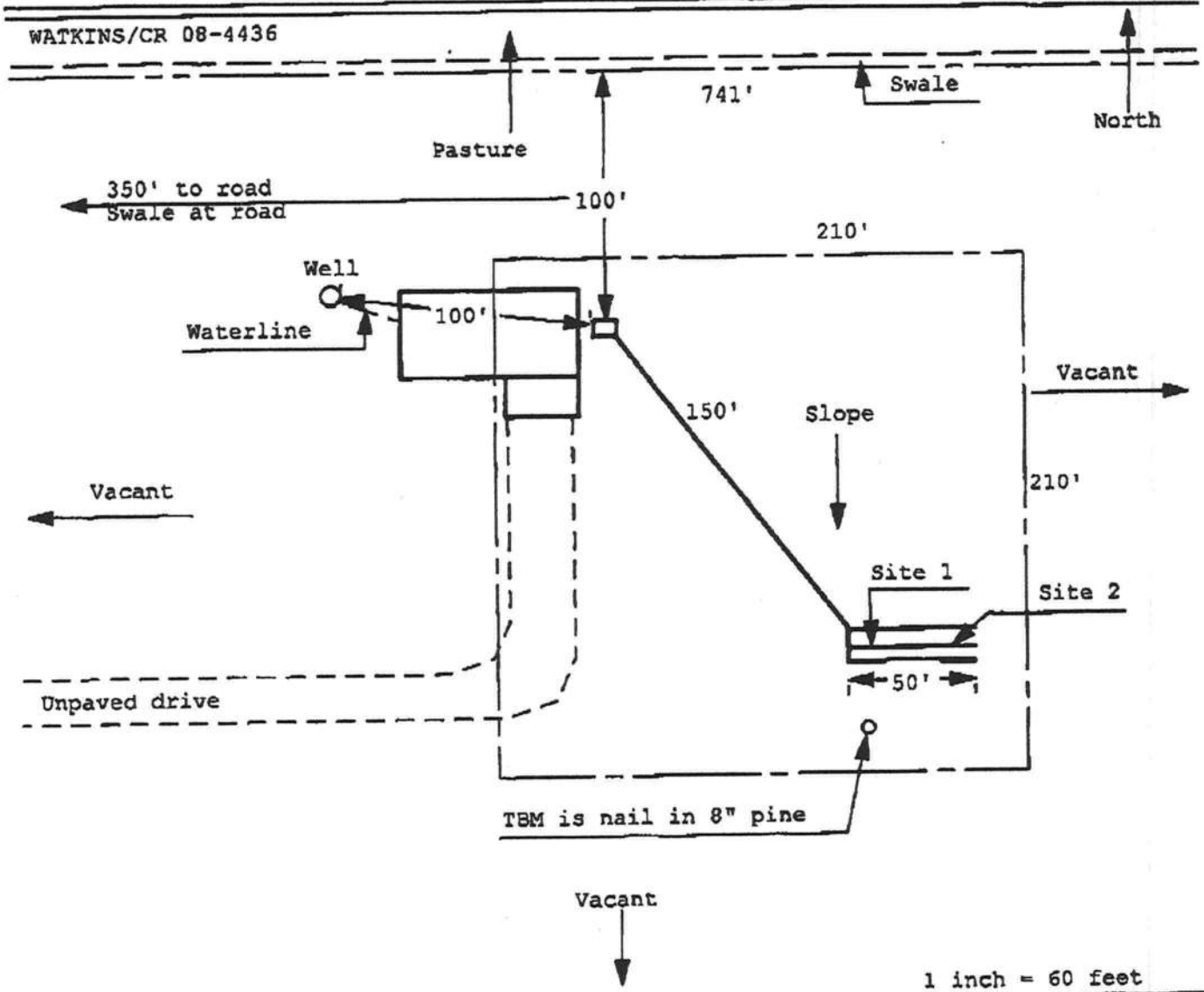

Site Plan Submitted By [signature] Date 6/28/10

Plan Approved ✓ Not Approved ____ Date 9/1/10

By [signature] Columbia CHD CPHU

Notes: See attached for full property dimensions.

SF

COLUMBIA COUNTY 9-1-1 ADDRESSING

P. O. Box 1787, Lake City, FL 32056-1787
PHONE: (386) 758-1125 * FAX: (386) 758-1365 * Email: ron_croft@columbiacountyfla.com

Addressing Maintenance

To maintain the Countywide Addressing Policy you must make application for a 9-1-1 Address at the time you apply for a building permit. The established standards for assigning and posting numbers to all principal buildings, dwellings, businesses and industries are contained in Columbia County Ordinance 2001-9. The addressing system is to enable Emergency Service Agencies to locate you in an emergency, and to assist the United States Postal Service and the public in the timely and efficient provision of services to residents and businesses of Columbia County.

DATE REQUESTED: 6/18/2010 **DATE ISSUED:** 6/22/2010

ENHANCED 9-1-1 ADDRESS:

159 SW SYDNEY NICOLE CT

LAKE CITY FL 32024

PROPERTY APPRAISER PARCEL NUMBER:

05-6S-17-09607-203

Remarks:

AKA PRCL "C" MELISSA'S SECRET GARDENS UNRE

Address Issued By: _____
Columbia County 9-1-1 Addressing / GIS Department

NOTICE: THIS ADDRESS WAS ISSUED BASED ON LOCATION INFORMATION RECEIVED FROM THE REQUESTER. SHOULD, AT A LATER DATE, THE LOCATION INFORMATION BE FOUND TO BE IN ERROR, THIS ADDRESS IS SUBJECT TO CHANGE.

1755

(Watkins) Lane & Pat.

COLUMBIA COUNTY BUILDING DEPARTMENT
RESIDENTIAL CHECK LIST REQUIRMENTS

MINIMUM PLAN REQUIREMENTS FOR THE FLORIDA BUILDING CODE RESIDENTIAL 2007 ONE (1) AND TWO (2) FAMILY DWELLINGS

ALL REQUIREMENTS ARE SUBJECT TO CHANGE

ALL BUILDING PLANS MUST INDICATE COMPLIANCE with the Current 2007 FLORIDA BUILDING CODES RESIDENTIAL. ALL PLANS OR DRAWINGS SHALL PROVIDE CALCULATIONS AND DETAILS THAT HAVE THE SEAL AND SIGNATURE OF A CERTIFIED ARCHITECT OR ENGINEER REGISTERED IN THE STATE OF FLORIDA, OR ALTERNATE METHODOLOGIES, APPROVED BY THE STATE OF FLORIDA BUILDING COMMISSION FOR ONE-AND-TWO FAMILY DWELLINGS.

FOR DESIGN PURPOSES THE FOLLOWING BASIC WIND SPEEDS ARE PER FIGURE R301.2(4) of the FLORIDA BUILDING CODES RESIDENTIAL (Florida Wind speed map) **SHALL BE USED.**

WIND SPEED LINE SHALL BE DEFINED AS FOLLOWS: THE CENTERLINE OF INTERSTATE 75.

ALL BUILDINGS CONSTRUCTED EAST OF SAID LINE SHALL BE -------- 100 MPH
ALL BUILDINGS CONSTRUCTED WEST OF SAID LINE SHALL BE --------110 MPH
NO AREA IN COLUMBIA COUNTY IS IN A WIND BORNE DEBRIS REGION

	GENERAL REQUIREMENTS: APPLICANT – PLEASE CHECK ALL APPLICABLE BOXES BEFORE SUBMITTAL			**Items to Include- Each Box shall be Circled as Applicable**		
				Yes	**No**	**N/A**
1	Two (2) complete sets of plans containing the following:			✓		
2	All drawings must be clear, concise, drawn to scale, details that are not used shall be marked void			✓		
3	Condition space (Sq. Ft.) 2630		Total (Sq. Ft.) under roof 4405	IIIIIIII	IIIIIIII	IIIII

Designers name and signature shall be on all documents and a licensed architect or engineer, signature and official embossed seal shall be affixed to the plans and documents as per the FLORIDA BUILDING CODES RESIDENTIAL R101.2.1

Site Plan information including:

4	Dimensions of lot or parcel of land	✓		
5	Dimensions of all building set backs	✓		
6	Location of all other structures (include square footage of structures) on parcel, existing or proposed well and septic tank and all utility easements.	✓		
7	Provide a full legal description of property. Warranty Deed.	✓		

Wind-load Engineering Summary, calculations and any details required

	GENERAL REQUIREMENTS: APPLICANT – PLEASE CHECK ALL APPLICABLE BOXES BEFORE SUBMITTAL	Items to Include- Each Box shall be Circled as Applicable		
8	Plans or specifications must show compliance with FBCR Chapter 3	IIIIII	IIIII	IIIIII
		YES	NO	N/A
9	Basic wind speed (3-second gust), miles per hour 110 MPH.	✓		
10	(Wind exposure – if more than one wind exposure is used, the wind exposure and applicable wind direction shall be indicated)	✓		
11	Wind importance factor and nature of occupancy	✓		
12	The applicable internal pressure coefficient, Components and Cladding	✓		
13	The design wind pressure in terms of psf (kN/m²), to be used for the design of exterior component, cladding materials not specifally designed by the registered design professional.	✓		

Elevations Drawing including:

14	All side views of the structure	✓		
15	Roof pitch	✓		
16	Overhang dimensions and detail with attic ventilation	✓		
17	Location, size and height above roof of chimneys no Fire place.			✓
18	Location and size of skylights with Florida Product Approval no sky lights.			✓
18	Number of stories	✓		
20A	Building height from the established grade to the roofs highest peak	✓		

Floor Plan including:

20	Dimensioned area plan showing rooms, attached garage, breeze ways, covered porches, deck, balconies	✓		
21	Raised floor surfaces located more than 30 inches above the floor or grade	✓		
22	All exterior and interior shear walls indicated	✓		
23	Shear wall opening shown (Windows, Doors and Garage doors)	✓		
24	Emergency escape and rescue opening shown in each bedroom (net clear opening shown)	✓		
25	Safety glazing of glass where needed	✓		
26	Fireplaces types (gas appliance) (vented or non-vented) or wood burning with Hearth (see chapter 10 of FBCR) no Fire place.			✓
27	Stairs with dimensions (width, tread and riser and total run) details of guardrails, Handrails (see FBCR SECTION 311) no stairs.			✓
28	Identify accessibility of bathroom (see FBCR SECTION 322)	✓		

All materials placed within opening or onto/into exterior walls, soffits or roofs shall have Florida product approval number and mfg. installation information submitted with the plan (see Florida product approval form)

GENERAL REQUIREMENTS: APPLICANT – PLEASE CHECK ALL APPLICABLE BOXES BEFORE SUBMITTAL	Items to Include- Each Box shall be Circled as Applicable

FBCR 403: Foundation Plans

		YES	NO	N/A
29	Location of all load-bearing walls footings indicated as standard, monolithic, dimensions, size and type of reinforcing.	✓		
30	All posts and/or column footing including size and reinforcing	✓		
31	Any special support required by soil analysis such as piling.			✓
32	Assumed load-bearing valve of soil_____ Pound Per Square Foot	✓		
33	Location of horizontal and vertical steel, for foundation or walls (include # size and type)	✓		

FBCR 506: CONCRETE SLAB ON GRADE

34	Show Vapor retarder (6mil. Polyethylene with joints lapped 6 inches and sealed)	✓		
35	Show control joints, synthetic fiber reinforcement or welded fire fabric reinforcement and Supports	✓		

FBCR 320: PROTECTION AGAINST TERMITES

36	Indicate on the foundation plan if soil treatment is used for subterranean termite prevention or submit other approved termite protection methods. **Protection shall be provided by registered termiticides** Treat Soil	✓		

FBCR 606: Masonry Walls and Stem walls (load bearing & shear Walls)

37	Show all materials making up walls, wall height, and Block size, mortar type	✓		
38	Show all Lintel sizes, type, spans and tie-beam sizes and spacing of reinforcement Wood Frame			✓

Metal frame shear wall and roof systems shall be designed, signed and sealed by Florida Prof. Engineer or Architect

Floor Framing System: First and/or second story

39	Floor truss package shall including layout and details, signed and sealed by Florida Registered Professional Engineer			✓
40	Show conventional floor joist type, size, span, spacing and attachment to load bearing walls, stem walls and/or priers			✓
41	Girder type, size and spacing to load bearing walls, stem wall and or priers			✓
42	Attachment of joist to girder			✓
43	Wind load requirements where applicable			✓
44	Show required under-floor crawl space			✓
45	Show required amount of ventilation opening for under-floor spaces			✓
46	Show required covering of ventilation opening			✓
47	Show the required access opening to access to under-floor spaces			✓
	Show the sub-floor structural panel sheathing type, thickness and fastener schedule on the edges &			✓

48	intermediate of the areas structural panel sheathing			✓
49	Show Draftstopping, Fire caulking and Fire blocking			✓
50	Show fireproofing requirements for garages attached to living spaces, per FBCR section 309			✓
51	Provide live and dead load rating of floor framing systems (psf).			✓

FBCR CHAPTER 6 WOOD WALL FRAMING CONSTRUCTION

	GENERAL REQUIREMENTS: APPLICANT – PLEASE CHECK ALL APPLICABLE BOXES BEFORE SUBMITTAL	Items to Include- Each Box shall be Circled as Applicable		
		YES	NO	N/A
52	Stud type, grade, size, wall height and oc spacing for all load bearing or shear walls	✓		✓
53	Fastener schedule for structural members per table FBCR 602.3 are to be shown	✓		✓
54	Show Wood structural panel's sheathing attachment to studs, joist, trusses, rafters and structural members, showing fastener schedule attachment on the edges & intermediate of the areas structural panel sheathing	✓		✓
55	Show all required connectors with a max uplift rating and required number of connectors and oc spacing for continuous connection of structural walls to foundation and roof trusses or rafter systems	✓		✓
56	Show sizes, type, span lengths and required number of support jack studs, king studs for shear wall opening and girder or header per FBCR Table 502.5 (1)	✓		✓
57	Indicate where pressure treated wood will be placed	✓		✓
58	Show all wall structural panel sheathing, grade, thickness and show fastener schedule for structural panel sheathing edges & intermediate areas	✓		✓
59	A detail showing gable truss bracing, wall balloon framing details or/ and wall hinge bracing detail	✓		✓

FBCR :ROOF SYSTEMS:

60	Truss design drawing shall meet section FBCR 802.10 Wood trusses	✓		✓
61	Include a layout and truss details, signed and sealed by Florida Professional Engineer	✓		✓
62	Show types of connector's assemblies' and resistance uplift rating for all trusses and rafters	✓		✓
63	Show gable ends with rake beams showing reinforcement or gable truss and wall bracing details	✓		✓
64	Provide dead load rating of trusses	✓		

FBCR 802:Conventional Roof Framing Layout

65	Rafter and ridge beams sizes, span, species and spacing	✓		✓
66	Connectors to wall assemblies' include assemblies' resistance to uplift rating	✓		✓
67	Valley framing and support details	✓		✓
68	Provide dead load rating of rafter system	✓		

FBCR Table 602,3(2) & FBCR 803 ROOF SHEATHING

69	Include all materials which will make up the roof decking, identification of structural panel sheathing, grade, thickness	✓		✓
70	Show fastener Size and schedule for structural panel sheathing on the edges & intermediate areas	✓		

FBCR ROOF ASSEMBLIES FRC Chapter 9

71	Include all materials which will make up the roof assembles covering	✓		
72	Submit Florida Product Approval numbers for each component of the roof assembles covering	✓		

FBCR Chapter 11 Energy Efficiency Code for residential building

Residential construction shall comply with this code by using the following compliance methods in the FBCR chapter11 Residential buildings compliance methods. *Two of the required forms are to be submitted, showing dimensions condition area equal to the total condition living space area*

	GENERAL REQUIREMENTS: APPLICANT – PLEASE CHECK ALL APPLICABLE BOXES BEFORE SUBMITTAL	Items to Include- Each Box shall be Circled as Applicable		
		YES	NO	N/A
73	Show the insulation R value for the following areas of the structure	✓		
74	Attic space R-38	✓		
75	Exterior wall cavity R-13	✓		
76	Crawl space Concrete Floor.			✓

HVAC information

77	Submit two copies of a Manual J sizing equipment or equivalent computation study	✓		
78	Exhaust fans locations in bathrooms Shown on Elec. Sheet. Page 4	✓		
79	Show clothes dryer route and total run of exhaust duct	✓		

Plumbing Fixture layout shown

80	All fixtures waste water lines shall be shown on the foundation plan			✓
81	Show the location of water heater	✓		

Private Potable Water

82	Pump motor horse power 1 1/2 H.P.	✓		
83	Reservoir pressure tank gallon capacity 86 Gal.	✓		
84	Rating of cycle stop valve if used 30 Gal. per. min.	✓		

Electrical layout shown including

85	Switches, outlets/receptacles, lighting and all required GFCI outlets identified	✓		
86	Ceiling fans	✓		
87	Smoke detectors & Carbon dioxide detectors	✓		
88	Service panel, sub-panel, location(s) and total ampere ratings 400 Amp.	✓		
89	On the electrical plans identify the electrical service overcurrent protection device for the main electrical service. This device shall be installed on the exterior of structures to serve as a disconnecting means for the utility company electrical service. Conductors used from the exterior disconnecting means to a panel or sub panel shall have four-wire conductors, of which one conductor shall be used as an equipment ground. Indicate if the utility company service entrance cable will be of the overhead or underground type. Under Ground	✓		

90	Appliances and HVAC equipment and disconnects	✓		
91	Arc Fault Circuits (AFCI) in bedrooms	✓		

Disclosure Statement for Owner Builders *If you as the applicant will be acting as an owner builder under section 489.103(7) of the Florida Statutes, submit the required owner builder disclosure statement form.*

Notice Of Commencement

A notice of commencement form **recorded** in the Columbia County Clerk Office is required to be filed with the building department Before Any Inspections can be preformed.

GENERAL REQUIREMENTS: APPLICANT – PLEASE CHECK ALL APPLICABLE BOXES BEFORE SUBMITTAL	Items to Include- Each Box shall be Circled as Applicable

THE FOLLOWING ITEMS MUST BE SUBMITTED WITH BUILDING PLANS

		YES	NO	N/A	
92	**Building Permit Application** A current Building Permit Application form is to be completed and submitted for all residential projects	✓			✓
93	**Parcel Number** The parcel number (Tax ID number) from the Property Appraiser (386) 758-1084 is required. A copy of property deed is also requested	✓			✓
94	**Environmental Health Permit or Sewer Tap Approval** A copy of a approved Columbia County Environmental Health (386) 758-1058	✓			
95	**City of Lake City** A permit showing an approved waste water sewer tap			✓	✓
96	**Toilet facilities shall be provided for all construction sites**	✓			
97	**Town of Fort White** (386) 497-2321 If the parcel in the application for building permit is within the Corporate city limits of Fort White an approval land use development letter issued by the Town of Fort is required to be submitted with the application for a building permit.			✓	✓
98	**Flood Information:** All projects within the Floodway of the Suwannee or Santa Fe Rivers shall require permitting through the Suwannee River Water Management District, before submitting a application to this office. Any project located within a flood zone where the base flood elevation (100 year flood) has been established shall meet the requirements of Section 8.5.2 of the Columbia County Land Development Regulations. Any project located within a flood zone where the base flood elevation has not been established (Zone A) shall meet the requirements of Section 8.5.3 of the Columbia County Land Development Regulations			✓	✓
99	CERTIFIED FINISHED FLOOR ELEVATIONS will be required on any project where the base flood elevation (100 year flood) has been established			✓	✓
100	A development permit will also be required. Development permit cost is **$50.00**			✓	
101	**Driveway Connection:** If the property does not have an existing access to a public road, then an application for a culvert permit (**$25.00**) must be made. If the applicant feels that a culvert is not needed, they may apply for a culvert waiver (**$50.00**). All culvert waivers are sent to the Columbia County Public Works Department for approval or denial.	✓			
102	**911 Address:** If the project is located in an area where a 911 address has not been issued, then application for a 911address must be applied for and **received** through the Columbia County Emergency Management Office of 911 Addressing Department (386) 758-1125	✓			

Section R101.2.1 of the Florida Building Code Residential:

The provisions of Chapter 1, Florida Building Code, Building shall govern the administration and enforcement of the Florida Building Code, Residential.

Section 105 of the Florida Building Code defines the:

Time limitation of application.

An application for a permit for any proposed work shall be deemed to have been abandoned 180 days after the date of filing, unless such application has been pursued in good faith or a permit has been issued; except that the building official is authorized to grant one or more extensions of time for additional periods not exceeding 90 days each. The extension shall be requested in writing and justifiable cause demonstrated.

Single-family residential dwelling.

Section 105.3.4 A building permit for a single-family residential dwelling must be issued within 30 working days of application therefor unless unusual circumstances require a longer time for processing the applicati or unless the permit application fails to satisfy the Florida Building Code or the enforcing agency's laws or ordinances.

Permit intent.

Section 105.4.1: A permit issued shall be constructed to be a license to proceed with the work and not as authority to violate, cancel, alter or set aside any of the provisions of the technical codes, nor shall issuance a permit prevent the building official from thereafter requiring a correction of errors in plans, construction or violations of this code. Every permit issued shall become invalid unless the work authorized by such permit is commenced within six months after its issuance, or if the work authorized by such permit is suspended or abandoned for a period of six months after the time the work is commenced.

If work has commenced.

Section 105.4.1.1: If work has commenced and the permit is revoked, becomes null and void, or expires because of lack of progress or abandonment, a new permit covering the proposed construction shall be obtained before proceeding with the work.

New Permit.

Section 105.4.1.2: If a new permit is not obtained within 180 days from the date the initial permit became nu and void, the building official is authorized to require that any work which has been commenced or completed be removed from the building site. Alternately, a new permit may be issued on application, providing the work in place and required to complete the structure meets all applicable regulations in effect at the time the initial permit became null and void and any regulations which may have become effective between the date of expiration and the date if issuance of the new permit.

Work Shall Be:

Section 105.4.1.3: Work shall be considered to be in active progress when the permit has received an approved inspection within 180 days. This provision shall not be applicable in case of civil commotion or strike or when the building work is halted due directly to judicial injunction, order or similar process.

The Fee:

Section 105.4.1.4: The fee for renewal reissuance and extension of a permit shall be set forth by the administrative authority.

When the submitted application is approved for permitting the applican will be notified by phone as to the date and time a building permit will b prepared and issued by the Columbia County Building & Zoning Department

PRODUCT APPROVAL SPECIFICATION SHEET

Location:_____ **Project Name:**_____

As required by Florida Statute 553.842 and Florida Administrative Code 9B-72, please provide the information and the product approval number(s) on the building components listed below if they will be utilized on the construction project for which you are **applying for a building permit on or after April 1, 2004**. We recommend you contact your local product supplier should you not know the product approval number for any of the applicable listed products. More information about statewide product approval can be obtained at www.floridabuilding.org

Category/Subcategory	Manufacturer	Product Description	Approval Number(s)
A. EXTERIOR DOORS			
1. Swinging			
2. Sliding			
3. Sectional			
4. Roll up			
5. Automatic			
6. Other			
B. WINDOWS			
1. Single hung		Atrium Series 160	
2. Horizontal Slider			
3. Casement			
4. Double Hung			
5. Fixed			
6. Awning			
7. Pass -through			
8. Projected			
9. Mullion			
10. Wind Breaker			
11 Dual Action			
12. Other			
C. PANEL WALL			
1. Siding			
2. Soffits			
3. EIFS			
4. Storefronts			
5. Curtain walls			
6. Wall louver			
7. Glass block			
8. Membrane			
9. Greenhouse			
10. Other			
D. ROOFING PRODUCTS			
1. Asphalt Shingles			
2. Underlayments			
3. Roofing Fasteners			
4. Non-structural Metal Rf			
5. Built-Up Roofing			
6. Modified Bitumen			
7. Single Ply Roofing Sys			
8. Roofing Tiles			
9. Roofing Insulation			
10. Waterproofing			
11. Wood shingles /shakes			
12. Roofing Slate			

Category/Subcategory (cont.)	Manufacturer	Product Description	Approval Number(s)
13. Liquid Applied Roof Sys			
14. Cements-Adhesives – Coatings			
15. Roof Tile Adhesive			
16. Spray Applied Polyurethane Roof			
17. Other			
E. SHUTTERS			
1. Accordion			
2. Bahama			
3. Storm Panels			
4. Colonial			
5. Roll-up			
6. Equipment			
7. Others			
F. SKYLIGHTS			
1. Skylight			
2. Other			
G. STRUCTURAL COMPONENTS			
1. Wood connector/anchor			
2. Truss plates			
3. Engineered lumber			
4. Railing			
5. Coolers-freezers			
6. Concrete Admixtures			
7. Material			
8. Insulation Forms			
9. Plastics			
10. Deck-Roof			
11. Wall			
12. Sheds			
13. Other			
H. NEW EXTERIOR ENVELOPE PRODUCTS			
1.			
2.			

The products listed below did not demonstrate product approval at plan review. I understand that at the time of inspection of these products, the following information must be available to the inspector on the jobsite; 1) copy of the product approval, 2) the performance characteristics which the product was testec and certified to comply with, 3) copy of the applicable manufacturers installation requirements.

I understand these products may have to be removed if approval cannot be demonstrated during inspect

Contractor or Contractor's Authorized Agent Signature

Print Name

Date

Permit # **(FOR STAFF USE ONLY)**

PRODUCT APPROVAL SPECIFICATION SHEET

Location:_____ **Project Name:** Watkins Lane + Pat

As required by Florida Statute 553.842 and Florida Administrative Code 9B-72, please provide the information and the product approval number(s) on the building components listed below if they will be utilized on the construction project for which you are **applying for a building permit on or after April 1, 2004**. We recommend you contact your local product supplier should you not know the product approval number for any of the applicable listed products. More information about statewide product approval can be obtained at www.floridabuilding.org

Category/Subcategory	Manufacturer	Product Description	Approval Number(s)
A. EXTERIOR DOORS			
1. Swinging	MASONITE	EXTERIOR DOORS	FL4334-R4
2. Sliding	MI HOME PRO	SLIDING GLASS DOORS	FL11956-R1
3. Sectional			
4. Roll up			
5. Automatic			
6. Other			
B. WINDOWS			
1. Single hung	ATRIUM	INSULATED WINDOWS	FL 6752-2
2. Horizontal Slider	ATRIUM	INSULATED WINDOWS	FL 7836-1
3. Casement	ATRIUM	INSULATED WINDOWS	FL 8716
4. Double Hung			
5. Fixed	ATRIUM	INSULATED WINDOWS	FL 7834-1
6. Awning			
7. Pass -through			
8. Projected			
9. Mullion			
10. Wind Breaker			
11 Dual Action			
12. Other			
C. PANEL WALL			
1. Siding	CERTAINTEED		FL12483
2. Soffits	CERTAINTEED		FL13389
3. EIFS			
4. Storefronts			
5. Curtain walls			
6. Wall louver			
7. Glass block	PITTSBURGH CORNING	GLASS BLOCK	FL 1363-R4
8. Membrane			
9. Greenhouse			
10. Other			
D. ROOFING PRODUCTS			
1. Asphalt Shingles			
2. Underlayments	WOODLAND		FL 1814-R4
3. Roofing Fasteners			
4. Non-structural Metal Rf	BERRIDGE	STANDING SEAM	FL 11269.1
5. Built-Up Roofing			
6. Modified Bitumen	CERTAINTEED		FL 2533-R3
7. Single Ply Roofing Sys			
8. Roofing Tiles			
9. Roofing Insulation			
10. Waterproofing			
11 Wood shingles /shakes			

Category/Subcategory (cont.)	Manufacturer	Product Description	Approval Number(s
13. Liquid Applied Roof Sys			
14. Cements-Adhesives – Coatings	CERTAINTEED	ADHESIVE(BULL)	FL 490-R2
15. Roof Tile Adhesive			
16. Spray Applied Polyurethane Roof			
17. Other			
E. SHUTTERS			
1. Accordion			
2. Bahama			
3. Storm Panels			
4. Colonial			
5. Roll-up			
6. Equipment			
7. Others			
F. SKYLIGHTS			
1. Skylight	VELOX	SKYLIGHTS	FL 451-R4
2. Other			
G. STRUCTURAL COMPONENTS			
1. Wood connector/anchor	SIMPSON	ANCHORS	FL 2355-R3
2. Truss plates	SIMPSON		FL 10655
3. Engineered lumber	WEYHAUSER	ENGINEERED LUMBER	FL 1630-R5
4. Railing			
5. Coolers-freezers			
6. Concrete Admixtures			
7. Material			
8. Insulation Forms			
9. Plastics			
10. Deck-Roof			
11. Wall			
12. Sheds			
13. Other			
H. NEW EXTERIOR ENVELOPE PRODUCTS			
1.			
2.			

The products listed below did not demonstrate product approval at plan review. I understand that at the time of inspection of these products, the following information must be available to the inspector on the jobsite; 1) copy of the product approval, 2) the performance characteristics which the product was teste and certified to comply with, 3) copy of the applicable manufacturers installation requirements.

I understand these products may have to be removed if approval cannot be demonstrated during inspec

Douglas E Edgley

Contractor's Authorized Agent Signature

DOUGLAS E EDGLEY

Print Name

7-2-10

Date

HALL'S PUMP & WELL SERVICE, INC.

SPECIALIZING IN 4"-6" WELLS

DONALD AND MARY HALL
OWNERS

PHONE (386) 752-1854
FAX (386) 755-7022
904 NW MAIN BLVD.
LAKE CITY, FLORIDA 32055

August 12, 2009

Notice to All Contractors:
Re: Doug Edgley

Please be advised that due to the new building codes we will use a large capacity diaphragm tank on all new wells. This will insure a minimum of one (1) minute draw down or one (1) minute refill. If a smaller diaphragm tank is used then we will install a cycle stop valve which will produce the same results. All wells will have a pump & tank combination that will be sufficient enough for each situation.

If you have any questions please feel free to call our office.

Thank You,

Donald D. Hall

SUBCONTRACTOR VERIFICATION FORM

APPLICATION NUMBER 28726 CONTRACTOR Edgley Construction PHONE 752-0580

THIS FORM MUST BE SUBMITTED PRIOR TO THE ISSUANCE OF A PERMIT

In Columbia County one permit will cover all trades doing work at the permitted site. It is REQUIRED that we have records of the subcontractors who actually did the trade specific work under the permit. Per Florida Statute 440 and Ordinance 89-6, a contractor shall require all subcontractors to provide evidence of workers' compensation or exemption, general liability insurance and a valid Certificate of Competency license in Columbia County.

Any changes, the permitted contractor is responsible for the corrected form being submitted to this office prior to the start of that subcontractor beginning any work. Violations will result in stop work orders and/or fines.

ELECTRICAL	Print Name License #:	Signature Phone #:
MECHANICAL/ A/C _____	Print Name License #:	Signature Phone #:
PLUMBING/ GAS	Print Name License #:	Signature Phone #:
ROOFING	Print Name License #:	Signature Phone #:
SHEET METAL	Print Name License #:	Signature Phone #:
FIRE SYSTEM/ SPRINKLER	Print Name License#:	Signature Phone #:
SOLAR	Print Name License #:	Signature Phone #:

Specialty License	License Number	Sub-Contractors Printed Name	Sub-Contractors Signature
MASON	80620	Brant Stovers	Brant Stovers
CONCRETE FINISHER			
FRAMING			
INSULATION			
STUCCO			
DRYWALL			
PLASTER			
CABINET INSTALLER			
PAINTING			
ACOUSTICAL CEILING			
GLASS			
CERAMIC TILE			
FLOOR COVERING			
ALUM/VINYL SIDING			
GARAGE DOOR			
METAL BLDG ERECTOR			

. S. 440.103 Building permits; identification of minimum premium policy.--Every employer shall, as a condition to pplying for and receiving a building permit, show proof and certify to the permit issuer that it has secured ompensation for its employees under this chapter as provided in ss. 440.10 and 440.38, and shall be presented each ime the employer applies for a building permit.

Permit#28726

Cal-Tech Testing, Inc.

• Engineering
• Geotechnical
• Environmental
Laboratories

P.O. Box 1625 • Lake City, FL 32056-1625 • Tel(386)755-3633 • Fax(386)752-5456
4784 Rosselle St., Jacksonville, FL 32254 • Tel(904)381-8901 • Fax(904)381-8902

REPORT OF IN-PLACE DENSITY TEST

JOB NO.: 10-00184-01
DATE TESTED: 5/7/10
DATE REPORTED: 5/10/10

PROJECT:	Watkins Residence, Lake City
CLIENT:	Dale's Excavation, Inc. 6139 SW SR 47, Lake City, FL 32024
GENERAL CONTRACTOR:	Dale's Excavation, Inc.
EARTHWORK CONTRACTOR:	Dale's Excavation, Inc.
INSPECTOR:	Daryn Wimpy

ASTM METHOD	SOIL USE
(D-2922) Nuclear	BUILDING FILL

SPECIFIED REQUIREMENTS: 95%

TEST NO.	TEST LOCATION	LIFT	TEST DEPTH	WET DENSITY (lb/ft³)	MOISTURE PERCENT	DRY DENSITY (lb/ft³)	PROCTOR TEST NO.	PROCTOR VALUE	MAXIMUM DENSITY
1	From NE Corner of Building 10' West x 12'	1	0-12"	112.9	12.4	100.4	PIT	103.1	97%
2	From SW Corner of Building 12' North x 8' East	1	0-12"	109.6	10.7	99.0	PIT	103.1	96%
3	From NE Corner of Building 15' West x 15'	2	0-12"	109.8	8.2	101.5	PIT	103.1	98%
4	From SW Corner of Building 8' North x 15' East	2	0-12"	107.6	5.8	101.7	PIT	103.1	99%

REMARKS: The Above Tests Meet Specified Requirements.

PROCTORS

PROCTOR NO.	SOIL DESCRIPTION	MAXIMUM DRY UNIT WEIGHT (lb/ft³)	OPT. MOIST.	TYPE
PIT	Light Brown Sand (Richardson Pit)	103.1	10.2	MODIFIED (ASTM D-1557)

Respectfully Submitted,
CAL-TECH TESTING, INC.

Linda Creamer, CEO, Inc

Linda M. Creamer
President - CEO

Reviewed By:

COPY

Date: 5/10/2010
Licensed, Florida No: 57842

The test results presented in this report are specific only to the samples tested at the time of testing. The tests were performed in accordance with generally accepted methods and standards. Since material conditions can vary between test locations and change with time, sound judgement should be exercised with regard to the use and interpretation of the data.

Cal-Tech Testing, Inc.

• Engineering
• Geotechnical
• Environmental
Laboratories

P.O. Box 1625 • Lake City, FL 32056-1625 • Tel(386)755-3633 • Fax(386)752-5456
4784 Rosselle St., Jacksonville, FL 32254 • Tel(904)381-8901 • Fax(904)381-8902

REPORT OF IN-PLACE DENSITY TEST

JOB NO.: 10-00184-01
DATE TESTED: 5/10/10
DATE REPORTED: 5/20/10

PROJECT:	Watkins Residence, Lake City
CLIENT:	Dale's Excavation, Inc. 6139 SW SR 47, Lake City, FL 32024
GENERAL CONTRACTOR:	Dale's Excavation, Inc.
EARTHWORK CONTRACTOR:	Dale's Excavation, Inc.
INSPECTOR:	Terry Hygema

ASTM METHOD	SOIL USE
(D-2922) Nuclear	BUILDING FILL

SPECIFIED REQUIREMENTS: 95%

TEST NO.		TEST LOCATION	TEST DEPTH	WET DENSITY (lb/ft³)	MOISTURE PERCENT	DRY DENSITY (lb/ft³)	PROCTOR TEST NO.	PROCTOR VALUE	MAXIMUM DENSITY
5		14' North x 12' West from SE Corner of Building	12"	110.1	8.1	101.9	Pit	103.1	99%
6		12' North x 10' East from SW Corner of Building	12"	109.9	7.8	101.9	Pit	103.1	99%

REMARKS: The Above Tests Meet Specified Requirements

PROCTORS

PROCTOR NO.		SOIL DESCRIPTION	MAXIMUM DRY UNIT WEIGHT (lb/ft³)	OPT. MOIST.	TYPE
Pit		Light Brown Sand (Richardson Pit)	103.1	10.2	MODIFIED (ASTM D-1557)

Respectfully Submitted,
CAL-TECH TESTING, INC.

Linda Creamer, CEO, DSE

Linda M. Creamer
President - CEO

Reviewed By:

COPY

Date: 5/20/2010
Licensed, Florida No. 57842

The test results presented in this report are specific only to the samples tested at the time of testing. The tests were performed in accordance with generally accepted methods and standards. Since material conditions can vary between test locations and change with time, sound judgement should be exercised with regard to the use and interpretation of the data.

FORM 1100A-08

FLORIDA ENERGY EFFICIENCY CODE FOR BUILDING CONSTRUCTION

Florida Department of Community Affairs Residential Performance Method A

Project Name:	905294WatkinsRes	Builder Name:	
Street:		Permit Office:	
City, State, Zip:	, FL ,	Permit Number:	
Owner:	Pat & Lane Watkins	Jurisdiction:	
Design Location:	FL, Gainesville		

1. New construction or existing	New (From Plans)
2. Single family or multiple family	Single-family
3. Number of units, if multiple family	1
4. Number of Bedrooms	4
5. Is this a worst case?	Yes
6. Conditioned floor area (ft²)	2630

7. Windows	Description	Area
a. U-Factor:	Dbl, U=0.35	481.50 ft²
SHGC:	SHGC=0.35	
b. U-Factor:	N/A	ft²
SHGC:		
c. U-Factor:	N/A	ft²
SHGC:		
d. U-Factor:	N/A	ft²
SHGC:		
e. U-Factor:	N/A	ft²
SHGC:		

8. Floor Types	Insulation	Area
a. Slab-On-Grade Edge Insulation	R=0.0	2630.00 ft²
b. N/A	R=	ft²
c. N/A	R=	ft²

9. Wall Types	Insulation	Area
a. Face Brick - Wood, Exterior	R=13.0	2232.00 ft²
b. Frame - Wood, Adjacent	R=13.0	180.00 ft²
c. N/A	R=	ft²
d. N/A	R=	ft²

10. Ceiling Types	Insulation	Area
a. Under Attic (Vented)	R=30.0	2684.00 ft²
b. N/A	R=	ft²
c. N/A	R=	ft²

11. Ducts
a. Sup: Attic Ret: Attic AH: Interior Sup. R= 6, 850 ft²

12. Cooling systems
a. Central Unit — Cap: 46.0 kBtu/hr, SEER: 13

13. Heating systems
a. Electric Heat Pump — Cap: 46.0 kBtu/hr, HSPF: 7.7

14. Hot water systems
a. Electric — Cap: 40 gallons, EF: 0.93

b. Conservation features
None

15. Credits — Pstat

Glass/Floor Area: 0.183

Total As-Built Modified Loads: 42.28
Total Baseline Loads: 52.73

PASS

I hereby certify that the plans and specifications covered by this calculation are in compliance with the Florida Energy Code.

PREPARED BY:
DATE: 1/14/10 EVAN BERNSLEY

I hereby certify that this building, as designed, is in compliance with the Florida Energy Code.

OWNER/AGENT:
DATE:

Review of the plans and specifications covered by this calculation indicates compliance with the Florida Energy Code. Before construction is completed this building will be inspected for compliance with Section 553.908 Florida Statutes.

BUILDING OFFICIAL:
DATE:

PROJECT

Title:	905294WatkinsRes	Bedrooms:	4	Adress Type:	Street Address
Building Type:	FLAsBuilt	Bathrooms:	0	Lot #	
Owner:	Pat & Lane Watkins	Conditioned Area:	2630	SubDivision:	
# of Units:	1	Total Stories:	1	PlatBook:	
Builder Name:		Worst Case:	Yes	Street:	
Permit Office:		Rotate Angle:	0	County:	Columbia
Jurisdiction:		Cross Ventilation:	No	City, State, Zip:	,
Family Type:	Single-family	Whole House Fan:	No		FL ,
New/Existing:	New (From Plans)				
Comment:					

CLIMATE

√	Design Location	TMY Site	IECC Zone	Design Temp 97.5 %	Design Temp 2.5 %	Int Design Temp Winter	Int Design Temp Summer	Heating Degree Days	Design Moisture	Daily Temp Range
_____	FL, Gainesville	FL_GAINESVILLE_REGI	2	32	92	75	70	1305.5	51	Medium

FLOORS

√	#	Floor Type	Perimeter	R-Value	Area	Tile	Wood	Carpet
_____	1	Slab-On-Grade Edge Insulatio	266 ft	0	2630 ft²	0.3	0.3	0.4

ROOF

√	#	Type	Materials	Roof Area	Gable Area	Roof Color	Solar Absor.	Tested	Deck Insul.	Pitch
_____	1	Hip	Composition shingles	2941 ft²	0 ft²	Dark	0.96	No	0	26.6 deg

ATTIC

√	#	Type	Ventilation	Vent Ratio (1 in)	Area	RBS	IRCC
_____	1	Full attic	Vented	303	2630 ft²	N	N

CEILING

√	#	Ceiling Type	R-Value	Area	Framing Frac	Truss Type
_____	1	Under Attic (Vented)	30	2684 ft²	0.11	Wood

WALLS

√	#	Ornt	Adjacent To	Wall Type	Cavity R-Value	Area	Sheathing R-Value	Framing Fraction	Solar Absor.
_____	1	N	Exterior	Face Brick - Wood	13	480 ft²	0	0.23	0.75
_____	2	S	Exterior	Face Brick - Wood	13	468 ft²	0	0.23	0.75
_____	3	E	Exterior	Face Brick - Wood	13	522 ft²	0	0.23	0.75
_____	4	W	Exterior	Face Brick - Wood	13	522 ft²	0	0.23	0.75
_____	5	NE	Exterior	Face Brick - Wood	13	120 ft²	0	0.23	0.75
_____	6	NW	Exterior	Face Brick - Wood	13	120 ft²	0	0.23	0.75
_____	7	??	Garage	Frame - Wood	13	180 ft²		0.23	0.01

DOORS

√	#	Ornt	Door Type	Storms	U-Value	Area
_____	1	E	Insulated	None	0.4	20 ft²
_____	2	S	Insulated	None	0.4	20 ft²
_____	3	??	Insulated	None	0.4	20 ft²

WINDOWS

Window orientation below is as entered. Actual orientation is modified by rotate angle shown in "Project" section above.

√	#	Ornt	Frame	Panes	NFRC	U-Factor	SHGC	Storms	Area	Overhang Depth	Overhang Separation	Int Shade	Screening
_____	1	N	Metal	Double (Clear)	Yes	0.35	0.35	N	15 ft²	0 ft 24 in	0 ft 30 in	HERS 2006	None
_____	2	W	Metal	Double (Clear)	Yes	0.35	0.35	N	48 ft²	0 ft 24 in	0 ft 30 in	HERS 2006	None
_____	3	NW	Metal	Double (Clear)	Yes	0.35	0.35	N	48 ft²	0 ft 96 in	0 ft 30 in	HERS 2006	None
_____	4	N	Metal	Double (Clear)	Yes	0.35	0.35	N	24 ft²	0 ft 156 in	0 ft 30 in	HERS 2006	None
_____	5	NE	Metal	Double (Clear)	Yes	0.35	0.35	N	48 ft²	0 ft 192 in	0 ft 30 in	HERS 2006	None
_____	6	E	Metal	Double (Clear)	Yes	0.35	0.35	N	20 ft²	0 ft 208 in	0 ft 54 in	HERS 2006	None
_____	7	E	Metal	Double (Clear)	Yes	0.35	0.35	N	24 ft²	0 ft 208 in	0 ft 30 in	HERS 2006	None
_____	8	N	Metal	Double (Clear)	Yes	0.35	0.35	N	30 ft²	0 ft 434 in	0 ft 42 in	HERS 2006	None
_____	9	E	Metal	Double (Clear)	Yes	0.35	0.35	N	30 ft²	0 ft 24 in	0 ft 30 in	HERS 2006	None
_____	10	N	Metal	Double (Clear)	Yes	0.35	0.35	N	15 ft²	0 ft 24 in	0 ft 42 in	HERS 2006	None
_____	11	E	Metal	Double (Clear)	Yes	0.35	0.35	N	8 ft²	0 ft 24 in	0 ft 30 in	HERS 2006	None
_____	12	S	Metal	Double (Clear)	Yes	0.35	0.35	N	12 ft²	0 ft 24 in	0 ft 30 in	HERS 2006	None
_____	13	S	Metal	Double (Clear)	Yes	0.35	0.35	N	12 ft²	0 ft 42 in	0 ft 42 in	HERS 2006	None
_____	14	S	Metal	Double (Clear)	Yes	0.35	0.35	N	30 ft²	0 ft 24 in	0 ft 30 in	HERS 2006	None
_____	15	S	Metal	Double (Clear)	Yes	0.35	0.35	N	20 ft²	0 ft 96 in	0 ft 54 in	HERS 2006	None
_____	16	S	Metal	Double (Clear)	Yes	0.35	0.35	N	14.5 ft²	0 ft 96 in	0 ft 13 in	HERS 2006	None
_____	17	S	Metal	Double (Clear)	Yes	0.35	0.35	N	15 ft²	0 ft 24 in	0 ft 30 in	HERS 2006	None
_____	18	W	Metal	Double (Clear)	Yes	0.35	0.35	N	60 ft²	0 ft 24 in	0 ft 30 in	HERS 2006	None
_____	19	W	Metal	Double (Clear)	Yes	0.35	0.35	N	8 ft²	0 ft 24 in	0 ft 30 in	HERS 2006	None

INFILTRATION & VENTING

√	Method	SLA	CFM 50	ACH 50	ELA	EqLA	---- Forced Ventilation ---- Supply CFM	Exhaust CFM	Run Time Fraction	Fan Watts
_____	Default	0.00036	2483	6.30	136.3	256.4	0 cfm	0 cfm	0	0

GARAGE

√	#	Floor Area	Ceiling Area	Exposed Wall Perimeter	Avg. Wall Height	Exposed Wall Insulation
_____	1	855.36 ft²	855.36 ft²	103 ft	9 ft	(invalid)

COOLING SYSTEM

√	#	System Type	Subtype	Efficiency	Capacity	Air Flow	SHR	Ductless
_____	1	Central Unit	None	SEER: 13	46 kBtu/hr	1380 cfm	0.75	

HEATING SYSTEM

√	#	System Type	Subtype	Efficiency	Capacity	Ductless
_____	1	Electric Heat Pump	None	HSPF: 7.7	46 kBtu/hr	

HOT WATER SYSTEM

√	#	System Type	EF	Cap	Use	SetPnt	Conservation
_____	1	Electric	0.93	40 gal	70 gal	120 deg	None

SOLAR HOT WATER SYSTEM

√	FSEC Cert #	Company Name	System Model #	Collector Model #	Collector Area	Storage Volume	FEF
_____	None	None			ft²		

DUCTS

√	#	---- Supply ---- Location	R-Value	Area	---- Return ---- Location	Area	Leakage Type	Air Handler	CFM 25	Percent Leakage	QN	RLF
_____	1	Attic	6	850 ft²	Attic	1 ft²	Default Leakage	Interior				

TEMPERATURES

Programable Thermostat: Y

Ceiling Fans:

Cooling	[X] Jan	[X] Feb	[X] Mar	[X] Apr	[X] May	[X] Jun	[X] Jul	[X] Aug	[X] Sep	[X] Oct	[X] Nov	[X] Dec
Heating	[X] Jan	[X] Feb	[X] Mar	[X] Apr	[X] May	[X] Jun	[X] Jul	[X] Aug	[X] Sep	[X] Oct	[X] Nov	[X] Dec
Venting	[X] Jan	[X] Feb	[X] Mar	[X] Apr	[X] May	[X] Jun	[X] Jul	[X] Aug	[X] Sep	[X] Oct	[X] Nov	[X] Dec

Thermostat Schedule: HERS 2006 Reference

Schedule Type		Hours 1	2	3	4	5	6	7	8	9	10	11	12
Cooling (WD)	AM	78	78	78	78	78	78	78	78	80	80	80	80
	PM	80	80	78	78	78	78	78	78	78	78	78	78
Cooling (WEH)	AM	78	78	78	78	78	78	78	78	78	78	78	78
	PM	78	78	78	78	78	78	78	78	78	78	78	78
Heating (WD)	AM	66	66	66	66	66	68	68	68	68	68	68	68
	PM	68	68	68	68	68	68	68	68	68	68	66	66
Heating (WEH)	AM	66	66	66	66	66	68	68	68	68	68	68	68
	PM	68	68	68	68	68	68	68	68	68	68	66	66

FORM 1100A-08

Code Compliance Cheklist

Residential Whole Building Performance Method A - Details

ADDRESS:	PERMIT #:
, FL,	

INFILTRATION REDUCTION COMPLIANCE CHECKLIST

COMPONENTS	SECTION	REQUIREMENTS FOR EACH PRACTICE	CHECK
Exterior Windows & Doors	N1106.AB.1.1	Maximum: .3 cfm/sq.ft. window area; .5 cfm/sq.ft. door area.	
Exterior & Adjacent Walls	N1106.AB.1.2.1	Caulk, gasket, weatherstrip or seal between: windows/doors & frames, surrounding wall; foundation & wall sole or sill plate; joints between exterior wall panels at corners; utility penetrations; between wall panels & top/bottom plates; between walls and floor. EXCEPTION: Frame walls where a continuous infiltration barrier is installed that extends from, and is sealed to, the foundation to the top plate.	
Floors	N1106.AB.1.2.2	Penetrations/openings > 1/8" sealed unless backed by truss or joint members. EXCEPTION: Frame floors where a continuous infiltration barrier is installed that is sealed to the perimeter, penetrations and seams.	
Ceilings	N1106.AB.1.2.3	Between walls & ceilings; penetrations of ceiling plane to top floor; around shafts, chases, soffits, chimneys, cabinets sealed to continuous air barrier; gaps in gyp board & top plate; attic access. EXCEPTION: Frame ceilings where a continuous infiltration barrier is installed that is sealed at the perimeter, at penetrations and seams.	
Recessed Lighting Fixtures	N1106.AB.1.2.4	Type IC rated with no penetrations, sealed; or Type IC or non-IC rated, installed inside a sealed box with 1/2" clearance & 3" from insulation; or Type IC with < 2.0 cfm from conditioned space, tested.	
Multi-story Houses	N1106.AB.1.2.5	Air barrier on perimeter of floor cavity between floors.	
Additional Infiltration reqts	N1106.AB.1.3	Exhaust fans vented to outdoors, dampers; combustion space heaters comply with NFPA, have combustion air.	

OTHER PRESCRIPTIVE MEASURES (must be met or exceeded by all residences.)

COMPONENTS	SECTION	REQUIREMENTS	CHECK
Water Heaters	N1112.AB.3	Comply with efficiency requirements in Table N112.ABC.3. Switch or clearly marked circuit breaker (electric) or cutoff (gas) must be provided. External or built-in heat trap required.	
Swimming Pools & Spas	N1112.AB.2.3	Spas & heated pools must have covers (except solar heated). Non-commercial pools must have a pump timer. Gas spa & pool heaters must have a minimum thermal efficiency of 78%. Heat pump pool heaters shall have a minimum COP of 4.0.	
Shower heads	N1112.AB.2.4	Water flow must be restricted to no more than 2.5 gallons per minute at 80 PSIG.	
Air Distribution Systems	N1110.AB	All ducts, fittings, mechanical equipment and plenum chambers shall be mechanically attached, sealed, insulated and installed in accordance with the criteria of Section N1110.AB. Ducts in unconditioned attics: R-6 min. insulation.	
HVAC Controls	N1107.AB.2	Separate readily accessible manual or automatic thermostat for each system.	
Insulation	N1104.AB.1 N1102.B.1.1	Ceilings-Min. R-19. Common walls-frame R-11 or CBS R-3 both sides. Common ceiling & floors R-11.	

ENERGY PERFORMANCE LEVEL (EPL) DISPLAY CARD

ESTIMATED ENERGY PERFORMANCE INDEX* = 80

The lower the EnergyPerformance Index, the more efficient the home.

, , FL,

1. New construction or existing	New (From Plans)
2. Single family or multiple family	Single-family
3. Number of units, if multiple family	1
4. Number of Bedrooms	4
5. Is this a worst case?	Yes
6. Conditioned floor area (ft²)	2630

7. Windows**	Description	Area
a. U-Factor:	Dbl, U=0.35	481.50 ft²
SHGC:	SHGC=0.35	
b. U-Factor:	N/A	ft²
SHGC:		
c. U-Factor:	N/A	ft²
SHGC:		
d. U-Factor:	N/A	ft²
SHGC:		
e. U-Factor:	N/A	ft²
SHGC:		

8. Floor Types	Insulation	Area
a. Slab-On-Grade Edge Insulation	R=0.0	2630.00 ft²
b. N/A	R=	ft²
c. N/A	R=	ft²

9. Wall Types	Insulation	Area
a. Face Brick - Wood, Exterior	R=13.0	2232.00 ft²
b. Frame - Wood, Adjacent	R=13.0	180.00 ft²
c. N/A	R=	ft²
d. N/A	R=	ft²

10. Ceiling Types	Insulation	Area
a. Under Attic (Vented)	R=30.0	2684.00 ft²
b. N/A	R=	ft²
c. N/A	R=	ft²

11. Ducts
a. Sup: Attic Ret: Attic AH: Interior Sup. R= 6, 850 ft²

12. Cooling systems
a. Central Unit — Cap: 46.0 kBtu/hr, SEER: 13

13. Heating systems
a. Electric Heat Pump — Cap: 46.0 kBtu/hr, HSPF: 7.7

14. Hot water systems
a. Electric — Cap: 40 gallons, EF: 0.93

b. Conservation features
None

15. Credits — Pstat

I certify that this home has complied with the Florida Energy Efficiency Code for Building Construction through the above energy saving features which will be installed (or exceeded) in this home before final inspection. Otherwise, a new EPL Display Card will be completed based on installed Code compliant features.

Builder Signature: _____ Date: _____

Address of New Home: _____ City/FL Zip: _____

*Note: The home's estimated Energy Performance Index is only available through the EnergyGauge USA - FlaRes2008 computer program. This is not a Building Energy Rating. If your Index is below 100, your home may qualify for incentives if you obtain a Florida Energy Gauge Rating. Contact the Energy Gauge Hotline at (321) 638-1492 or see the Energy Gauge web site at energygauge.com for information and a list of certified Raters. For information about Florida's Energy Efficiency Code for Building Construction, contact the

**Label required by Section 13-104.4.5 of the Florida Building Code, Building, or Section B2.1.1 of Appendix G of the Florida Building Code, Residential, if not DEFAULT.

ENERGY PERFORMANCE LEVEL (EPL) DISPLAY CARD

ESTIMATED ENERGY PERFORMANCE INDEX* = 80

The lower the EnergyPerformance Index, the more efficient the home.

, , FL,

1. New construction or existing	New (From Plans)
2. Single family or multiple family	Single-family
3. Number of units, if multiple family	1
4. Number of Bedrooms	4
5. Is this a worst case?	Yes
6. Conditioned floor area (ft²)	2630

7. Windows**	Description	Area
a. U-Factor:	Dbl, U=0.35	481.50 ft²
SHGC:	SHGC=0.35	
b. U-Factor:	N/A	ft²
SHGC:		
c. U-Factor:	N/A	ft²
SHGC:		
d. U-Factor:	N/A	ft²
SHGC:		
e. U-Factor:	N/A	ft²
SHGC:		

8. Floor Types	Insulation	Area
a. Slab-On-Grade Edge Insulation	R=0.0	2630.00 ft²
b. N/A	R=	ft²
c. N/A	R=	ft²

9. Wall Types	Insulation	Area
a. Face Brick - Wood, Exterior	R=13.0	2232.00 ft²
b. Frame - Wood, Adjacent	R=13.0	180.00 ft²
c. N/A	R=	ft²
d. N/A	R=	ft²

10. Ceiling Types	Insulation	Area
a. Under Attic (Vented)	R=30.0	2684.00 ft²
b. N/A	R=	ft²
c. N/A	R=	ft²

11. Ducts
a. Sup: Attic Ret: Attic AH: Interior Sup. R= 6, 850 ft²

12. Cooling systems
a. Central Unit — Cap: 46.0 kBtu/hr, SEER: 13

13. Heating systems
a. Electric Heat Pump — Cap: 46.0 kBtu/hr, HSPF: 7.7

14. Hot water systems
a. Electric — Cap: 40 gallons, EF: 0.93

b. Conservation features
None

15. Credits — Pstat

I certify that this home has complied with the Florida Energy Efficiency Code for Building Construction through the above energy saving features which will be installed (or exceeded) in this home before final inspection. Otherwise, a new EPL Display Card will be completed based on installed Code compliant features.

Builder Signature: _____ Date: _____

Address of New Home: _____ City/FL Zip: _____

Department of Community Affairs at (850) 487-1824.

**Label required by Section 13-104.4.5 of the Florida Building Code, Building, or Section B2.1.1 of Appendix G of the Florida Building Code, Residential, if not DEFAULT.

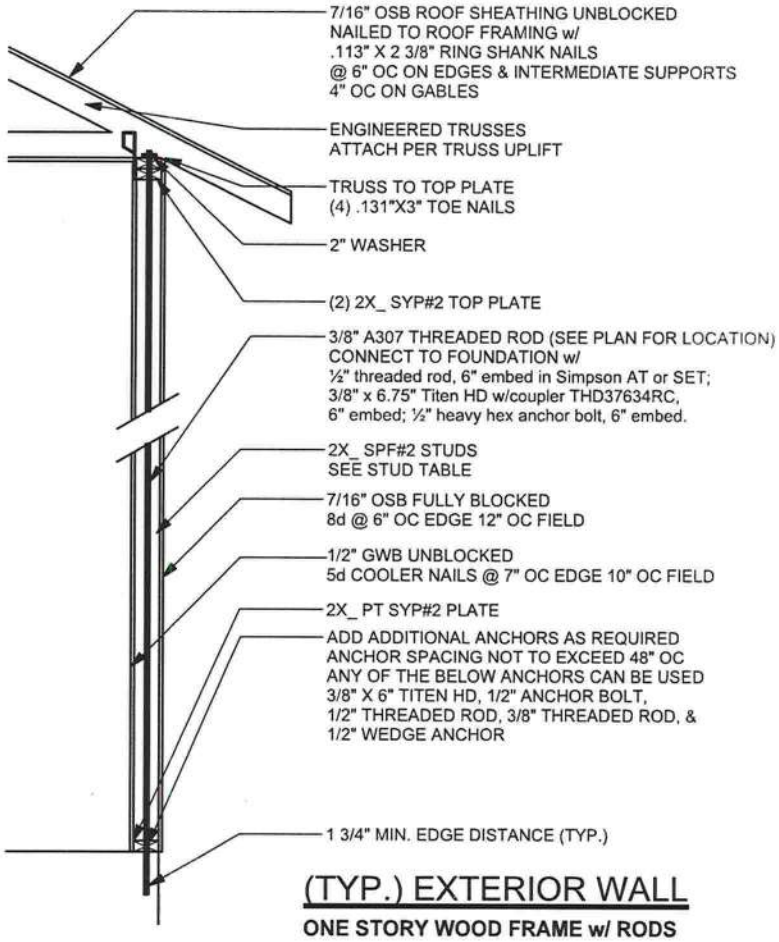

(TYP.) EXTERIOR WALL

ONE STORY WOOD FRAME w/ RODS

ADDENDUM TO CHANGE FROM 1/2" RODS TO 3/8" RODS:
IT IS OK TO USE 3/8" RODS IN PLACE OF 1/2" RODS

3/8" ROD = 2105LB
3/8" x 6 3/4" TITEN HD IN CMU CHAIR BLOCK = 2645 lb

MARK D DISOSWAY III
LICENSE
No 53915
STATE OF FLORIDA
PROFESSIONAL ENGINEER

Mark Disosway
29 DEC 10

WINDLOAD ENGINEER:
Mark Disosway, PE
No.53915, POB 868, Lake City, FL 32056,
386-754-5419

DIMENSIONS:
Stated dimensions supercede scaled dimensions. Refer all questions to Mark Disosway, P.E. for resolution. Do not proceed without clarification.

CERTIFICATION: I hereby certify that I have examined this plan, and that the applicable portions of the plan, relating to wind engineering comply with section R301.2.1, florida building code residential 2007, to the best of my knowledge.

LIMITATION: This design is valid for one building, at specified location.

MARK DISOSWAY
P.E. 53915

SEAL

Permit # 28724

Watkins Residence

ADDRESS:
Columbia County, Florida

Mark Disosway P.E.
P.O. Box 868
Lake City, Florida 32056
Phone: (386) 754 - 5419
Fax: (386) 269 - 4871

PRINTED DATE:
December 29, 2010

DRAWN BY:	STRUCTURAL BY:
David Disosway	David Disosway

FINALS DATE:
12Jan10

JOB NUMBER:
905294

Permit #28826

Residential System Sizing Calculation

Summary

Pat & Lane Watkins

, FL

Project Title:
905294WatkinsRes.

Class 3 Rating
Registration No. 0
Climate: North

1/14/2010

Location for weather data: Gainesville - Defaults: Latitude(29) Altitude(152 ft.) Temp Range(M)					
Humidity data: Interior RH (50%) Outdoor wet bulb (77F) Humidity difference(54gr.)					
Winter design temperature	33	F	Summer design temperature	92	F
Winter setpoint	70	F	Summer setpoint	75	F
Winter temperature difference	37	F	Summer temperature difference	17	F
Total heating load calculation	**38603**	**Btuh**	**Total cooling load calculation**	**33285**	**Btuh**
Submitted heating capacity	% of calc	Btuh	Submitted cooling capacity	% of calc	Btuh
Total (Electric Heat Pump)	119.2	46000	Sensible (SHR = 0.75)	128.8	34500
Heat Pump + Auxiliary(0.0kW)	119.2	46000	Latent	176.9	11500
			Total (Electric Heat Pump)	138.2	46000

WINTER CALCULATIONS

Winter Heating Load (for 2630 sqft)

Load component			Load	
Window total	482	sqft	6235	Btuh
Wall total	1909	sqft	6268	Btuh
Door total	60	sqft	777	Btuh
Ceiling total	2684	sqft	3163	Btuh
Floor total	266	sqft	11614	Btuh
Infiltration	260	cfm	10547	Btuh
Duct loss			0	Btuh
Subtotal			**38603**	**Btuh**
Ventilation	0	cfm	0	Btuh
TOTAL HEAT LOSS			**38603**	**Btuh**

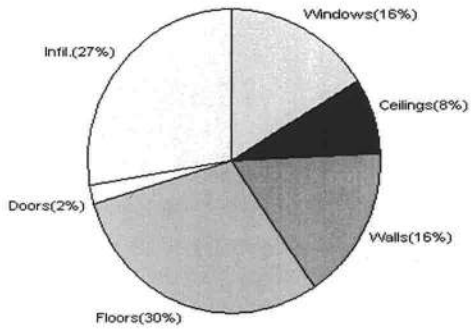

SUMMER CALCULATIONS

Summer Cooling Load (for 2630 sqft)

Load component			Load	
Window total	482	sqft	11600	Btuh
Wall total	1909	sqft	2414	Btuh
Door total	60	sqft	588	Btuh
Ceiling total	2684	sqft	4445	Btuh
Floor total			0	Btuh
Infiltration	134	cfm	2496	Btuh
Internal gain			5240	Btuh
Duct gain			0	Btuh
Sens. Ventilation	0	cfm	0	Btuh
Total sensible gain			**26783**	**Btuh**
Latent gain(ducts)			0	Btuh
Latent gain(infiltration)			4902	Btuh
Latent gain(ventilation)			0	Btuh
Latent gain(internal/occupants/other)			1600	Btuh
Total latent gain			**6502**	**Btuh**
TOTAL HEAT GAIN			**33285**	**Btuh**

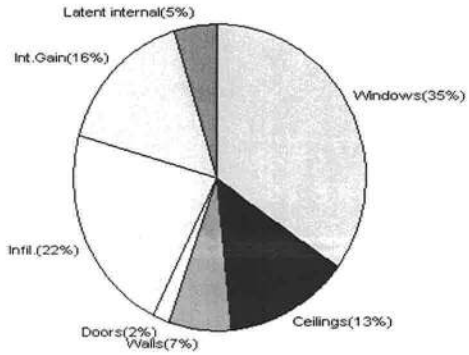

For Florida residences only

EnergyGauge® System Sizing
PREPARED BY: _____
DATE: 1/14/10 EVAN BEAMSLEY

System Sizing Calculations - Winter

Residential Load - Whole House Component Details

Pat & Lane Watkins
, FL

Project Title:
905294WatkinsRes.

Class 3 Rating
Registration No. 0
Climate: North

Reference City: Gainesville (Defaults) Winter Temperature Difference: 37.0 F

1/14/2010

This calculation is for Worst Case. The house has been rotated 315 degrees.

Component Loads for Whole House

Window	Panes/SHGC/Frame/U	Orientation	Area(sqft) X	HTM=	Load
1	2, SHGC=0.35, Metal, 0.35	NW	15.0	12.9	194 Btuh
2	2, SHGC=0.35, Metal, 0.35	SW	48.0	12.9	622 Btuh
3	2, SHGC=0.35, Metal, 0.35	W	48.0	12.9	622 Btuh
4	2, SHGC=0.35, Metal, 0.35	NW	24.0	12.9	311 Btuh
5	2, SHGC=0.35, Metal, 0.35	N	48.0	12.9	622 Btuh
6	2, SHGC=0.35, Metal, 0.35	NE	20.0	12.9	259 Btuh
7	2, SHGC=0.35, Metal, 0.35	NE	24.0	12.9	311 Btuh
8	2, SHGC=0.35, Metal, 0.35	NW	30.0	12.9	388 Btuh
9	2, SHGC=0.35, Metal, 0.35	NE	30.0	12.9	388 Btuh
10	2, SHGC=0.35, Metal, 0.35	NW	15.0	12.9	194 Btuh
11	2, SHGC=0.35, Metal, 0.35	NE	8.0	12.9	104 Btuh
12	2, SHGC=0.35, Metal, 0.35	SE	12.0	12.9	155 Btuh
13	2, SHGC=0.35, Metal, 0.35	SE	12.0	12.9	155 Btuh
14	2, SHGC=0.35, Metal, 0.35	SE	30.0	12.9	388 Btuh
15	2, SHGC=0.35, Metal, 0.35	SE	20.0	12.9	259 Btuh
16	2, SHGC=0.35, Metal, 0.35	SE	14.5	12.9	188 Btuh
17	2, SHGC=0.35, Metal, 0.35	SE	15.0	12.9	194 Btuh
18	2, SHGC=0.35, Metal, 0.35	SW	60.0	12.9	777 Btuh
19	2, SHGC=0.35, Metal, 0.35	SW	8.0	12.9	104 Btuh
	Window Total		482(sqft)		6235 Btuh
Walls	Type	R-Value	Area X	HTM=	Load
1	Face Brick - Wood - Ext(0.09)	13.0	1749	3.3	5742 Btuh
2	Frame - Wood - Adj(0.09)	13.0	160	3.3	525 Btuh
	Wall Total		1909		6268 Btuh
Doors	Type		Area X	HTM=	Load
1	Insulated - Adjacent		20	12.9	259 Btuh
2	Insulated - Exterior		20	12.9	259 Btuh
3	Insulated - Exterior		20	12.9	259 Btuh
	Door Total		60		777Btuh
Ceilings	Type/Color/Surface	R-Value	Area X	HTM=	Load
1	Vented Attic/D/Shin)	30.0	2684	1.2	3163 Btuh
	Ceiling Total		2684		3163Btuh
Floors	Type	R-Value	Size X	HTM=	Load
1	Slab On Grade	0	266.0 ft(p)	43.7	11614 Btuh
	Floor Total		266		11614 Btuh
			Zone Envelope Subtotal:		28056 Btuh
Infiltration	Type	ACH X	Zone Volume	CFM=	
	Natural	0.66	23670	260.4	10547 Btuh
Ductload	Partially sealed, R6.0, Supply(Attic), Return(Attic)			(DLM of 0.00)	0 Btuh

Manual J Winter Calculations

Residential Load - Component Details (continued)

Pat & Lane Watkins
, FL

Project Title:
905294WatkinsRes.

Class 3 Rating
Registration No. 0
Climate: North

1/14/2010

Zone #1	**Sensible Zone Subtotal**	**38603 Btuh**

WHOLE HOUSE TOTALS

	Subtotal Sensible	38603 Btuh
	Ventilation Sensible	0 Btuh
	Total Btuh Loss	38603 Btuh

Key: Window types (SHGC - Shading coefficient of glass as SHGC numerical value or as clear or tint)
(Frame types - metal, wood or insulated metal)
(U - Window U-Factor or 'DEF' for default)
(HTM - ManualJ Heat Transfer Multiplier)
Key: Floor size (perimeter(p) for slab-on-grade or area for all other floor types)

For Florida residences only

System Sizing Calculations - Winter

Residential Load - Room by Room Component Details

Pat & Lane Watkins

, FL

Project Title:
905294WatkinsRes.

Class 3 Rating
Registration No. 0
Climate: North

Reference City: Gainesville (Defaults) Winter Temperature Difference: 37.0 F

1/14/2010

This calculation is for Worst Case. The house has been rotated 315 degrees.

Component Loads for Zone #1: Main

Window	Panes/SHGC/Frame/U	Orientation	Area(sqft) X	HTM=	Load
1	2, SHGC=0.35, Metal, 0.35	NW	15.0	12.9	194 Btuh
2	2, SHGC=0.35, Metal, 0.35	SW	48.0	12.9	622 Btuh
3	2, SHGC=0.35, Metal, 0.35	W	48.0	12.9	622 Btuh
4	2, SHGC=0.35, Metal, 0.35	NW	24.0	12.9	311 Btuh
5	2, SHGC=0.35, Metal, 0.35	N	48.0	12.9	622 Btuh
6	2, SHGC=0.35, Metal, 0.35	NE	20.0	12.9	259 Btuh
7	2, SHGC=0.35, Metal, 0.35	NE	24.0	12.9	311 Btuh
8	2, SHGC=0.35, Metal, 0.35	NW	30.0	12.9	388 Btuh
9	2, SHGC=0.35, Metal, 0.35	NE	30.0	12.9	388 Btuh
10	2, SHGC=0.35, Metal, 0.35	NW	15.0	12.9	194 Btuh
11	2, SHGC=0.35, Metal, 0.35	NE	8.0	12.9	104 Btuh
12	2, SHGC=0.35, Metal, 0.35	SE	12.0	12.9	155 Btuh
13	2, SHGC=0.35, Metal, 0.35	SE	12.0	12.9	155 Btuh
14	2, SHGC=0.35, Metal, 0.35	SE	30.0	12.9	388 Btuh
15	2, SHGC=0.35, Metal, 0.35	SE	20.0	12.9	259 Btuh
16	2, SHGC=0.35, Metal, 0.35	SE	14.5	12.9	188 Btuh
17	2, SHGC=0.35, Metal, 0.35	SE	15.0	12.9	194 Btuh
18	2, SHGC=0.35, Metal, 0.35	SW	60.0	12.9	777 Btuh
19	2, SHGC=0.35, Metal, 0.35	SW	8.0	12.9	104 Btuh
	Window Total		482(sqft)		6235 Btuh
Walls	Type	R-Value	Area X	HTM=	Load
1	Face Brick - Wood - Ext(0.09)	13.0	1749	3.3	5742 Btuh
2	Frame - Wood - Adj(0.09)	13.0	160	3.3	525 Btuh
	Wall Total		1909		6268 Btuh
Doors	Type		Area X	HTM=	Load
1	Insulated - Adjacent		20	12.9	259 Btuh
2	Insulated - Exterior		20	12.9	259 Btuh
3	Insulated - Exterior		20	12.9	259 Btuh
	Door Total		60		777Btuh
Ceilings	Type/Color/Surface	R-Value	Area X	HTM=	Load
1	Vented Attic/D/Shin)	30.0	2684	1.2	3163 Btuh
	Ceiling Total		2684		3163Btuh
Floors	Type	R-Value	Size X	HTM=	Load
1	Slab On Grade	0	266.0 ft(p)	43.7	11614 Btuh
	Floor Total		266		11614 Btuh
			Zone Envelope Subtotal:		28056 Btuh
Infiltration	Type	ACH X	Zone Volume	CFM=	
	Natural	0.66	23670	260.4	10547 Btuh
Ductload	Partially sealed, R6.0, Supply(Attic), Return(Attic)			(DLM of 0.00)	0 Btuh

Manual J Winter Calculations

Residential Load - Component Details (continued)

Pat & Lane Watkins

, FL

Project Title:
905294WatkinsRes.

Class 3 Rating
Registration No. 0
Climate: North

1/14/2010

Zone #1	**Sensible Zone Subtotal**	**38603 Btuh**

WHOLE HOUSE TOTALS

	Subtotal Sensible	38603 Btuh
	Ventilation Sensible	0 Btuh
	Total Btuh Loss	38603 Btuh

Key: Window types (SHGC - Shading coefficient of glass as SHGC numerical value or as clear or tint)
(Frame types - metal, wood or insulated metal)
(U - Window U-Factor or 'DEF' for default)
(HTM - ManualJ Heat Transfer Multiplier)
Key: Floor size (perimeter(p) for slab-on-grade or area for all other floor types)

For Florida residences only

System Sizing Calculations - Summer

Residential Load - Whole House Component Details

Pat & Lane Watkins

, FL

Project Title:
905294WatkinsRes.

Class 3 Rating
Registration No. 0
Climate: North

Reference City: Gainesville (Defaults) Summer Temperature Difference: 17.0 F 1/14/2010

This calculation is for Worst Case. The house has been rotated 315 degrees.

Component Loads for Whole House

Window	Type* Pn/SHGC/U/InSh/ExSh/IS	Ornt	Overhang Len	Overhang Hgt	Window Area(sqft) Gross	Shaded	Unshaded	HTM Shaded	HTM Unshaded	Load
1	2, SHGC=0.35, 0.35, None,N,N	NW	2ft.	7ft.	15.0	0.0	15.0	13	30	444 Btuh
2	2, SHGC=0.35, 0.35, None,N,N	SW	2ft.	8ft.	48.0	10.9	37.1	13	31	1291 Btuh
3	2, SHGC=0.35, 0.35, None,N,N	W	8ft.	8ft.	48.0	37.1	10.9	13	40	928 Btuh
4	2, SHGC=0.35, 0.35, None,N,N	NW	13ft.	8ft.	24.0	0.0	24.0	13	30	710 Btuh
5	2, SHGC=0.35, 0.35, None,N,N	N	16ft.	8ft.	48.0	0.0	48.0	13	13	641 Btuh
6	2, SHGC=0.35, 0.35, None,N,N	NE	17.3	9ft.	20.0	0.0	20.0	13	30	592 Btuh
7	2, SHGC=0.35, 0.35, None,N,N	NE	17.3	8ft.	24.0	0.0	24.0	13	30	710 Btuh
8	2, SHGC=0.35, 0.35, None,N,N	NW	36.1	8ft.	30.0	0.0	30.0	13	30	888 Btuh
9	2, SHGC=0.35, 0.35, None,N,N	NE	2ft.	7ft.	30.0	0.0	30.0	13	30	888 Btuh
10	2, SHGC=0.35, 0.35, None,N,N	NW	2ft.	8ft.	15.0	0.0	15.0	13	30	444 Btuh
11	2, SHGC=0.35, 0.35, None,N,N	NE	2ft.	4ft.	8.0	0.0	8.0	13	30	237 Btuh
12	2, SHGC=0.35, 0.35, None,N,N	SE	2ft.	5ft.	12.0	5.5	6.5	13	31	275 Btuh
13	2, SHGC=0.35, 0.35, None,N,N	SE	3.5ft.	6ft.	12.0	11.5	0.5	13	31	168 Btuh
14	2, SHGC=0.35, 0.35, None,N,N	SE	2ft.	7ft.	30.0	8.2	21.8	13	31	783 Btuh
15	2, SHGC=0.35, 0.35, None,N,N	SE	8ft.	9ft.	20.0	20.0	0.0	13	31	267 Btuh
16	2, SHGC=0.35, 0.35, None,N,N	SE	8ft.	3.5ft.	14.5	14.5	0.0	13	31	194 Btuh
17	2, SHGC=0.35, 0.35, None,N,N	SE	2ft.	7ft.	15.0	4.1	10.9	13	31	392 Btuh
18	2, SHGC=0.35, 0.35, None,N,N	SW	2ft.	7ft.	60.0	16.4	43.6	13	31	1566 Btuh
19	2, SHGC=0.35, 0.35, None,N,N	SW	2ft.	5ft.	8.0	3.6	4.4	13	31	183 Btuh
	Window Total				482 (sqft)					11600 Btuh

Walls	Type	R-Value/U-Value	Area(sqft)	HTM	Load
1	Face Brick - Wood - Ext	13.0/0.09	1748.5	1.2	2173 Btuh
2	Frame - Wood - Adj	13.0/0.09	160.0	1.5	241 Btuh
	Wall Total		1909 (sqft)		2414 Btuh

Doors	Type	Area (sqft)	HTM	Load
1	Insulated - Adjacent	20.0	9.8	196 Btuh
2	Insulated - Exterior	20.0	9.8	196 Btuh
3	Insulated - Exterior	20.0	9.8	196 Btuh
	Door Total	60 (sqft)		588 Btuh

Ceilings	Type/Color/Surface	R-Value	Area(sqft)	HTM	Load
1	Vented Attic/DarkShingle	30.0	2684.0	1.7	4445 Btuh
	Ceiling Total		2684 (sqft)		4445 Btuh

Floors	Type	R-Value	Size	HTM	Load
1	Slab On Grade	0.0	266 (ft(p))	0.0	0 Btuh
	Floor Total		266.0 (sqft)		0 Btuh

	Zone Envelope Subtotal:	19047 Btuh

Infiltration	Type	ACH	Volume(cuft)	CFM=	Load
	SensibleNatural	0.34	23670	134.1	2496 Btuh

Internal gain	Occupants	Btuh/occupant	Appliance	Load
	8	X 230 +	3400	5240 Btuh

Duct load	Partially sealed, R6.0, Supply(Attic), Return(Attic)	DGM = 0.00	0.0 Btuh
		Sensible Zone Load	**26783 Btuh**

Manual J Summer Calculations

Residential Load - Component Details (continued)

Pat & Lane Watkins

, FL

Project Title:
905294WatkinsRes.

Class 3 Rating
Registration No. 0
Climate: North

1/14/2010

WHOLE HOUSE TOTALS

	Sensible Envelope Load All Zones	**26783**	**Btuh**
	Sensible Duct Load	0	Btuh
	Total Sensible Zone Loads	**26783**	**Btuh**
	Sensible ventilation	0	Btuh
	Blower	0	Btuh
Whole House	**Total sensible gain**	**26783**	**Btuh**
Totals for Cooling	Latent infiltration gain (for 54 gr. humidity difference)	4902	Btuh
	Latent ventilation gain	0	Btuh
	Latent duct gain	0	Btuh
	Latent occupant gain (8 people @ 200 Btuh per person)	1600	Btuh
	Latent other gain	0	Btuh
	Latent total gain	**6502**	**Btuh**
	TOTAL GAIN	**33285**	**Btuh**

*Key: Window types (Pn - Number of panes of glass)
(SHGC - Shading coefficient of glass as SHGC numerical value or as clear or tint)
(U - Window U-Factor or 'DEF' for default)
(InSh - Interior shading device: none(N), Blinds(B), Draperies(D) or Roller Shades(R))
(ExSh - Exterior shading device: none(N) or numerical value)
(BS - Insect screen: none(N), Full(F) or Half(H))
(Ornt - compass orientation)

For Florida residences only

System Sizing Calculations - Summer

Residential Load - Room by Room Component Details

Pat & Lane Watkins
, FL

Project Title:
905294WatkinsRes.

Class 3 Rating
Registration No. 0
Climate: North

Reference City: Gainesville (Defaults) Summer Temperature Difference: 17.0 F 1/14/2010

This calculation is for Worst Case. The house has been rotated 315 degrees.

Component Loads for Zone #1: Main

Window	Type* Pn/SHGC/U/InSh/ExSh/IS	Ornt	Overhang Len	Overhang Hgt	Window Area(sqft) Gross	Shaded	Unshaded	HTM Shaded	HTM Unshaded	Load
1	2, SHGC=0.35, 0.35, None,N,N	NW	2ft.	7ft.	15.0	0.0	15.0	13	30	444 Btuh
2	2, SHGC=0.35, 0.35, None,N,N	SW	2ft.	8ft.	48.0	10.9	37.1	13	31	1291 Btuh
3	2, SHGC=0.35, 0.35, None,N,N	W	8ft.	8ft.	48.0	37.1	10.9	13	40	928 Btuh
4	2, SHGC=0.35, 0.35, None,N,N	NW	13ft.	8ft.	24.0	0.0	24.0	13	30	710 Btuh
5	2, SHGC=0.35, 0.35, None,N,N	N	16ft.	8ft.	48.0	0.0	48.0	13	13	641 Btuh
6	2, SHGC=0.35, 0.35, None,N,N	NE	17.3	9ft.	20.0	0.0	20.0	13	30	592 Btuh
7	2, SHGC=0.35, 0.35, None,N,N	NE	17.3	8ft.	24.0	0.0	24.0	13	30	710 Btuh
8	2, SHGC=0.35, 0.35, None,N,N	NW	36.1	8ft.	30.0	0.0	30.0	13	30	888 Btuh
9	2, SHGC=0.35, 0.35, None,N,N	NE	2ft.	7ft.	30.0	0.0	30.0	13	30	888 Btuh
10	2, SHGC=0.35, 0.35, None,N,N	NW	2ft.	8ft.	15.0	0.0	15.0	13	30	444 Btuh
11	2, SHGC=0.35, 0.35, None,N,N	NE	2ft.	4ft.	8.0	0.0	8.0	13	30	237 Btuh
12	2, SHGC=0.35, 0.35, None,N,N	SE	2ft.	5ft.	12.0	5.5	6.5	13	31	275 Btuh
13	2, SHGC=0.35, 0.35, None,N,N	SE	3.5ft.	6ft.	12.0	11.5	0.5	13	31	168 Btuh
14	2, SHGC=0.35, 0.35, None,N,N	SE	2ft.	7ft.	30.0	8.2	21.8	13	31	783 Btuh
15	2, SHGC=0.35, 0.35, None,N,N	SE	8ft.	9ft.	20.0	20.0	0.0	13	31	267 Btuh
16	2, SHGC=0.35, 0.35, None,N,N	SE	8ft.	3.5ft.	14.5	14.5	0.0	13	31	194 Btuh
17	2, SHGC=0.35, 0.35, None,N,N	SE	2ft.	7ft.	15.0	4.1	10.9	13	31	392 Btuh
18	2, SHGC=0.35, 0.35, None,N,N	SW	2ft.	7ft.	60.0	16.4	43.6	13	31	1566 Btuh
19	2, SHGC=0.35, 0.35, None,N,N	SW	2ft.	5ft.	8.0	3.6	4.4	13	31	183 Btuh
	Window Total				482 (sqft)					11600 Btuh

Walls	Type	R-Value/U-Value	Area(sqft)	HTM	Load
1	Face Brick - Wood - Ext	13.0/0.09	1748.5	1.2	2173 Btuh
2	Frame - Wood - Adj	13.0/0.09	160.0	1.5	241 Btuh
	Wall Total		1909 (sqft)		2414 Btuh

Doors	Type	Area (sqft)	HTM	Load
1	Insulated - Adjacent	20.0	9.8	196 Btuh
2	Insulated - Exterior	20.0	9.8	196 Btuh
3	Insulated - Exterior	20.0	9.8	196 Btuh
	Door Total	60 (sqft)		588 Btuh

Ceilings	Type/Color/Surface	R-Value	Area(sqft)	HTM	Load
1	Vented Attic/DarkShingle	30.0	2684.0	1.7	4445 Btuh
	Ceiling Total		2684 (sqft)		4445 Btuh

Floors	Type	R-Value	Size	HTM	Load
1	Slab On Grade	0.0	266 (ft(p))	0.0	0 Btuh
	Floor Total		266.0 (sqft)		0 Btuh

				Zone Envelope Subtotal:	19047 Btuh
Infiltration	Type	ACH	Volume(cuft)	CFM=	Load
	SensibleNatural	0.34	23670	134.1	2496 Btuh
Internal gain		Occupants	Btuh/occupant	Appliance	Load
		8	X 230 +	3400	5240 Btuh
Duct load	Partially sealed, R6.0, Supply(Attic), Return(Attic)			DGM = 0.00	0.0 Btuh
				Sensible Zone Load	**26783 Btuh**

Manual J Summer Calculations

Residential Load - Component Details (continued)

Pat & Lane Watkins
, FL

Project Title:
905294WatkinsRes.

Class 3 Rating
Registration No. 0
Climate: North

1/14/2010

WHOLE HOUSE TOTALS

	Sensible Envelope Load All Zones	**26783**	**Btuh**
	Sensible Duct Load	0	Btuh
	Total Sensible Zone Loads	**26783**	**Btuh**
	Sensible ventilation	0	Btuh
	Blower	0	Btuh
Whole House	**Total sensible gain**	**26783**	**Btuh**
Totals for Cooling	Latent infiltration gain (for 54 gr. humidity difference)	4902	Btuh
	Latent ventilation gain	0	Btuh
	Latent duct gain	0	Btuh
	Latent occupant gain (8 people @ 200 Btuh per person)	1600	Btuh
	Latent other gain	0	Btuh
	Latent total gain	**6502**	**Btuh**
	TOTAL GAIN	**33285**	**Btuh**

*Key: Window types (Pn - Number of panes of glass)
(SHGC - Shading coefficient of glass as SHGC numerical value or as clear or tint)
(U - Window U-Factor or 'DEF' for default)
(InSh - Interior shading device: none(N), Blinds(B), Draperies(D) or Roller Shades(R))
(ExSh - Exterior shading device: none(N) or numerical value)
(BS - Insect screen: none(N), Full(F) or Half(H))
(Ornt - compass orientation)

For Florida residences only

Residential Window Diversity

MidSummer

Pat & Lane Watkins

, FL

Project Title:
905294WatkinsRes.

Class 3 Rating
Registration No. 0
Climate: North

1/14/2010

Weather data for: Gainesville - Defaults

Summer design temperature	92 F	Average window load for July	10530 Btu
Summer setpoint	75 F	Peak window load for July	16361 Btu
Summer temperature difference	17 F	Excusion limit(130% of Ave.)	13689 Btu
Latitude	29 North	Window excursion (July)	2672 Btuh

WINDOW Average and Peak Loads

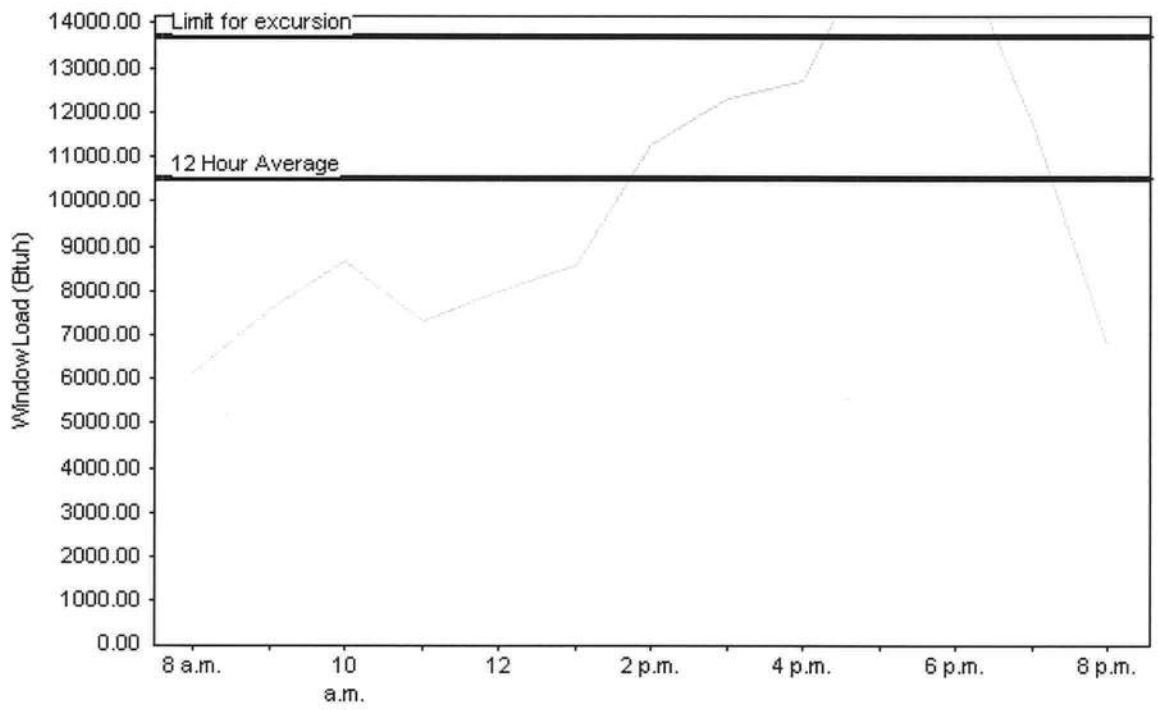

Total July Window Load(Radiation and conduction)

This application has glass areas that produce large heat gains for part of the day. Variable air volume devices are required to overcome spikes in solar gain for one or more rooms. Install a zoned system or provide zone control for problem rooms. Single speed equipment may not be suitable for the application.

EnergyGauge® System Sizing for Florida residences only
PREPARED BY:
DATE: 1/14/10 EVAN BERNSCEY

Watkins Job#

ITW Building Components Group, Inc.

1950 Marley Drive Haines City, FL 33844
Florida Engineering Certificate of Authorization Number: 0 278
Florida Certificate of Product Approval # FL1999
Page 1 of 1 Document ID:1TXP8228Z0118152010

Truss Fabricator: Anderson Truss Company
Job Identification: 9-244--Fill in later EDGLEY -- , **
Truss Count: 75
Model Code: Florida Building Code 2007 and 2009 Supplement
Truss Criteria: FBC2007Res/TPI-2002(STD)
Engineering Software: Alpine Software,Version 9.02.
Structural Engineer of Record: The identity of the structural EOR did not exist as of
Address: the seal date per section 61G15-31.003(5a) of the FAC
Minimum Design Loads: Roof - 40.0 PSF @ 1.25 Duration
Floor - N/A
Wind - 110 MPH ASCE 7-05 -Closed

Seal Date: 12/18/2009

-Truss Design Engineer-
Doug Fleming
Florida License Number: 66648
1950 Marley Drive
Haines City, FL 33844

Notes:

1. Determination as to the suitability of these truss components for the structure is the responsibility of the building designer/engineer of record, as defined in ANSI/TPI 1
2. The drawing date shown on this index sheet must match the date shown on the individual truss component drawing.
3. As shown on attached drawings; the drawing number is preceded by: HCUSR8228

Details: BRCLBSUB-CNNAILSP-HIPFRAME-A1101505-GBLLETIN-

#	Ref Description	Drawing#	Date
1	60293--HJ7	09352001	12/18/09
2	60294--HJ1.2	09352002	12/18/09
3	60295--T42	09352003	12/18/09
4	60296--H7A	09352004	12/18/09
5	60297--H9A	09352005	12/18/09
6	60298--H11A	09352006	12/18/09
7	60299--H13A	09352007	12/18/09
8	60300--H15A	09352008	12/18/09
9	60301--H17A	09352009	12/18/09
10	60302--H19A	09352010	12/18/09
11	60303--A	09352011	12/18/09
12	60304--AG	09352074	12/18/09
13	60305--H7B	09352068	12/18/09
14	60306--H7B1	09352063	12/18/09
15	60307--H9B1	09352012	12/18/09
16	60308--H11B1	09352013	12/18/09
17	60309--H13B1	09352014	12/18/09
18	60310--H15B1	09352022	12/18/09
19	60311--B10	09352023	12/18/09
20	60312--B9	09352024	12/18/09
21	60313--H9B	09352025	12/18/09
22	60314--H11B	09352026	12/18/09
23	60315--BH1	09352027	12/18/09
24	60316--BH2	09352028	12/18/09
25	60317--BH3	09352029	12/18/09
26	60318--B1	09352030	12/18/09
27	60319--B2	09352031	12/18/09
28	60320--B3	09352032	12/18/09
29	60321--B4	09352033	12/18/09
30	60322--B5	09352034	12/18/09
31	60323--B6	09352035	12/18/09
32	60324--B7	09352036	12/18/09
33	60325--B8	09352037	12/18/09
34	60326--H7C	09352064	12/18/09
35	60327--C	09352015	12/18/09
36	60328--C1	09352038	12/18/09
37	60329--C2	09352039	12/18/09
38	60330--C3	09352040	12/18/09
39	60331--H7D	09352065	12/18/09
40	60332--HM7D	09352066	12/18/09
41	60333--H9D	09352016	12/18/09
42	60334--D	09352017	12/18/09
43	60335--D5	09352041	12/18/09
44	60336--D4	09352042	12/18/09
45	60337--D3	09352043	12/18/09
46	60338--D2	09352044	12/18/09
47	60339--D1	09352045	12/18/09
48	60340--HM9D	09352046	12/18/09
49	60341--E	09352018	12/18/09
50	60342--EG2	09352067	12/18/09
51	60343--EG1	09352075	12/18/09
52	60344--HF2	09352069	12/18/09
53	60345--HF1	09352070	12/18/09
54	60346--HF1A	09352071	12/18/09
55	60347--HF3	09352072	12/18/09
56	60348--H7G	09352059	12/18/09
57	60349--H9G	09352047	12/18/09
58	60350--G	09352048	12/18/09
59	60351--EJ7	09352049	12/18/09
60	60352--EJ7	09352050	12/18/09
61	60353--CJ5	09352051	12/18/09
62	60354--HJ7	09352060	12/18/09
63	60355--CJ3	09352052	12/18/09
64	60356--CJ1	09352053	12/18/09
65	60357--CJ5	09352054	12/18/09
66	60358--CJ3	09352055	12/18/09
67	60359--CJ1	09352056	12/18/09
68	60360--EJ7S	09352019	12/18/09
69	60361--EJ1.4	09352057	12/18/09
70	60362--EJ7H	09352058	12/18/09
71	60363--EJ7G	09352061	12/18/09
72	60364--KGE	09352021	12/18/09
73	60365--K	09352020	12/18/09
74	60366--K1	09352073	12/18/09
75	60367--H1.4L	09352062	12/18/09

COLUMBIA COUNTY BUILDING DEPARTMENT
Received for FILE COPY
Code Compliance
PLANS EXAMINER

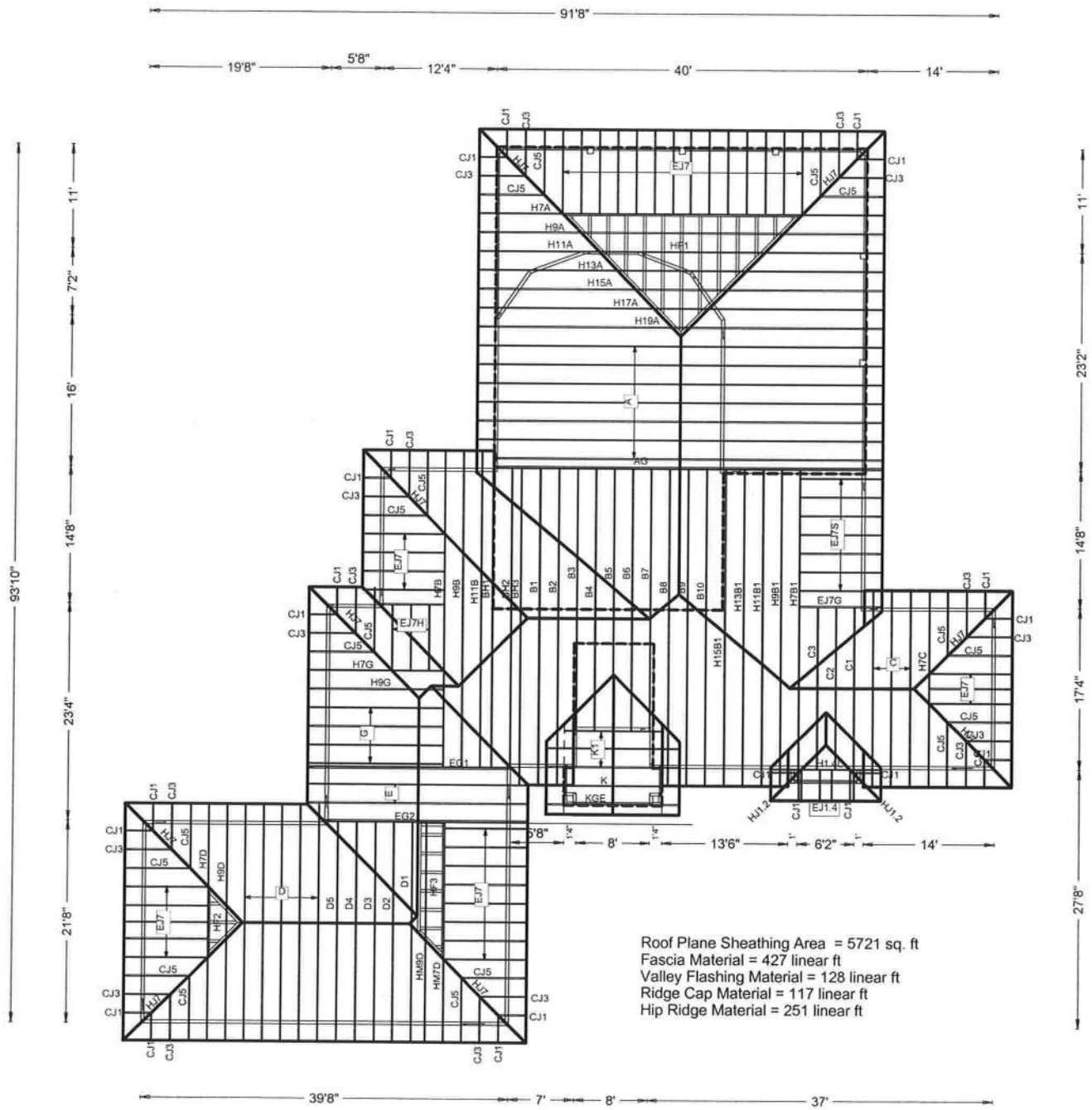

EDGLEY CONSTRUCTION/WATKINS

JOB DESCRIPTION:: Fill in later
/: EDGLEY

JOB NO:
9-244

PAGE NO:
1 OF 1

(9-244--Fill in later EDGLEY -- , ** - HJ7)

THIS DWG PREPARED FROM COMPUTER INPUT (LOADS & DIMENSIONS) SUBMITTED BY TRUSS MFR.

Top chord 2x4 SP #2 Dense
Bot chord 2x4 SP #2 Dense
Webs 2x4 SP #3

Hipjack supports 7-0-0 setback jacks with no webs.

Deflection meets L/240 live and L/180 total load.

110 mph wind, 15.00 ft mean hgt, ASCE 7-05, CLOSED bldg, not located within 4.50 ft from roof edge, CAT II, EXP C, wind TC DL=5.0 psf, wind BC DL=5.0 psf. Iw=1.00 GCpi(+/-)=0.18

Wind reactions based on MWFRS pressures.

Provide (2) 16d common nails(0.162"x3.5"), toe nailed at Top chord.
Provide (3) 16d common nails(0.162"x3.5"), toe nailed at Bot chord.

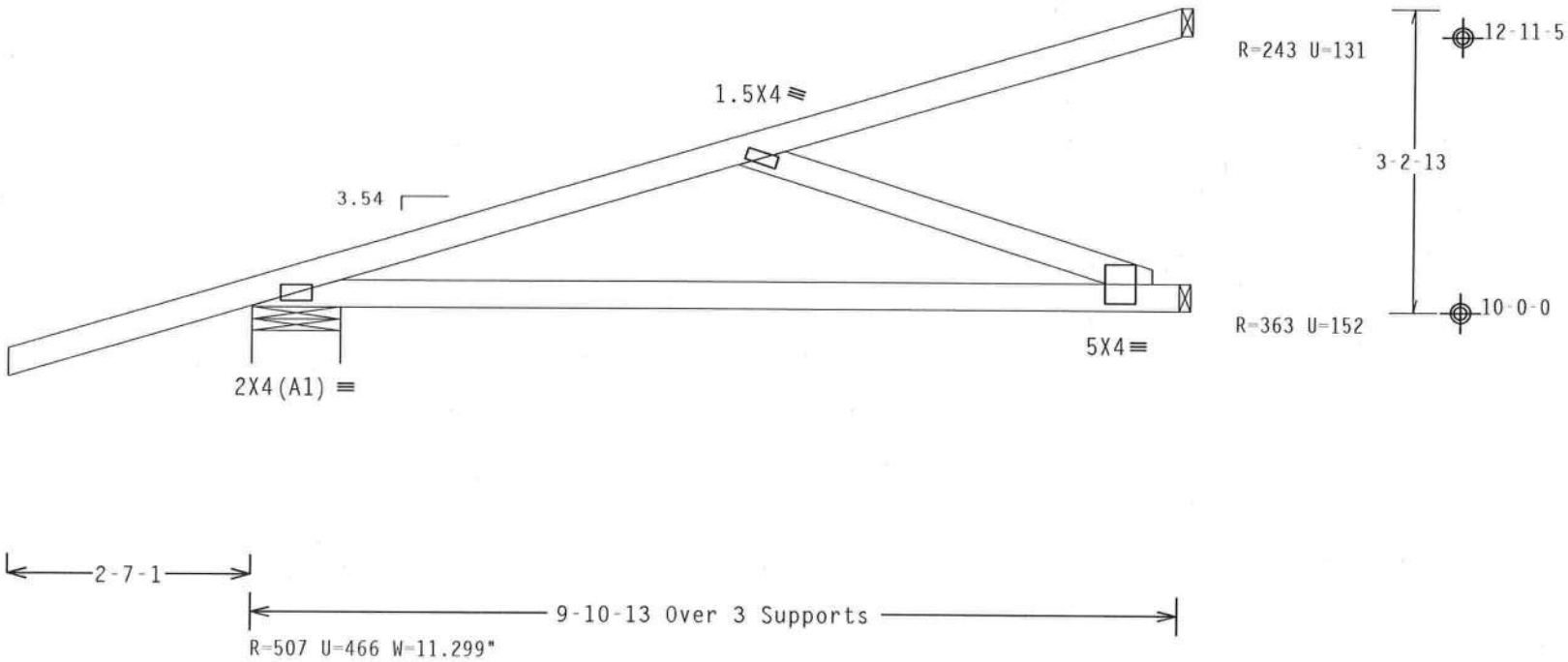

Design Crit: FBC2007Res/TPI-2002(STD)

PLT TYP. Wave FT/RT=20%(0%)/0(0) 9.02.00 [illegible] QTY:2 FL/-/4/-/-/R/- Scale =.5"/Ft.

ALPINE
ITW Building Components Group Inc.
Haines City, FL 33844
FL COA #0 278

WARNING TRUSSES REQUIRE EXTREME CARE IN FABRICATION, HANDLING, SHIPPING, INSTALLING AND BRACING. REFER TO BCSI (BUILDING COMPONENT SAFETY INFORMATION), PUBLISHED BY TPI (TRUSS PLATE INSTITUTE, 218 NORTH LEE STREET, SUITE 312, ALEXANDRIA, VA, 22314) AND WTCA (WOOD TRUSS COUNCIL OF AMERICA, 6300 ENTERPRISE LANE, MADISON, WI 53719) FOR SAFETY PRACTICES PRIOR TO PERFORMING THESE FUNCTIONS. UNLESS OTHERWISE INDICATED TOP CHORD SHALL HAVE PROPERLY ATTACHED STRUCTURAL PANELS AND BOTTOM CHORD SHALL HAVE A PROPERLY ATTACHED RIGID CEILING.

IMPORTANTFURNISH A COPY OF THIS DESIGN TO THE INSTALLATION CONTRACTOR. ITW BCG, INC. SHALL NOT BE RESPONSIBLE FOR ANY DEVIATION FROM THIS DESIGN; ANY FAILURE TO BUILD THE TRUSS IN CONFORMANCE WITH TPI; OR FABRICATING, HANDLING, SHIPPING, INSTALLING & BRACING OF TRUSSES. DESIGN CONFORMS WITH APPLICABLE PROVISIONS OF NDS (NATIONAL DESIGN SPEC. BY AF&PA) AND TPI. ITW BCG CONNECTOR PLATES ARE MADE OF 20/18/16GA (W,H/SS/K) ASTM A653 GRADE 40/60 (W, K/H,SS) GALV. STEEL. APPLY PLATES TO EACH FACE OF TRUSS AND, UNLESS OTHERWISE LOCATED ON THIS DESIGN, POSITION PER DRAWINGS 160A-Z. ANY INSPECTION OF PLATES FOLLOWED BY (I) SHALL BE PER ANNEX A3 OF TPI1-2002 SEC.3. A SEAL ON THIS DRAWING INDICATES ACCEPTANCE OF PROFESSIONAL ENGINEERING RESPONSIBILITY SOLELY FOR THE TRUSS COMPONENT DESIGN SHOWN. THE SUITABILITY AND USE OF THIS COMPONENT FOR ANY BUILDING IS THE RESPONSIBILITY OF THE BUILDING DESIGNER PER ANSI/TPI 1 SEC. 2.

DOUGLAS FLEMING LICENSE No. 66648 STATE OF FLORIDA PROFESSIONAL ENGINEER

[illegible]18 '09

TC LL	20.0 PSF	REF	R8228- 60293
TC DL	10.0 PSF	DATE	12/18/09
BC DL	10.0 PSF	DRW	HCUSR8228 09352001
BC LL	0.0 PSF	HC-ENG	JB/DF
TOT.LD.	40.0 PSF	SEQN-	67584
DUR.FAC.	1.25	FROM	AH
SPACING	24.0"	REF-	1TYP8228701

(9-244--Fill in later EDGLEY -- , ** - HJ1.2)

THIS DWG PREPARED FROM COMPUTER INPUT (LOADS & DIMENSIONS) SUBMITTED BY TRUSS MFR.

Top chord 2x4 SP #2 Dense
Bot chord 2x4 SP #2 Dense

Hipjack supports 1-4-8 setback jacks with no webs.

Deflection meets L/240 live and L/180 total load.

110 mph wind, 15.00 ft mean hgt, ASCE 7-05, CLOSED bldg, Located anywhere in roof, CAT II, EXP C, wind TC DL=5.0 psf, wind BC DL=5.0 psf. Iw=1.00 GCpi(+/-)=0.18

Wind reactions based on MWFRS pressures.

Provide (2) 16d common nails(0.162"x3.5"), toe nailed at Top chord.
Provide (2) 16d common nails(0.162"x3.5"), toe nailed at Bot chord.

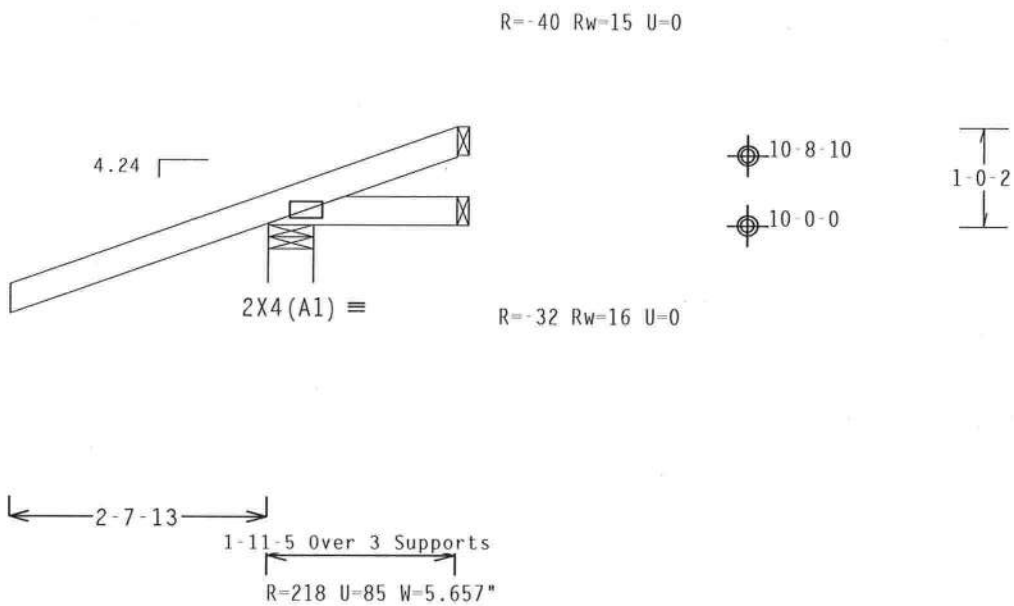

Design Crit: FBC2007Res/TPI-2002(STD)

PLT TYP. Wave | FT/RT=20%(0%)/0(0) | 9.02.00.0[illegible] | QTY:2 | FL/-/4/-/-/R/- | Scale =.5"/Ft.

ALPINE
ITW Building Components Group Inc.
Haines City, FL 33844
FL COA #0 278

WARNING TRUSSES REQUIRE EXTREME CARE IN FABRICATION, HANDLING, SHIPPING, INSTALLING AND BRACING. REFER TO BCSI (BUILDING COMPONENT SAFETY INFORMATION), PUBLISHED BY TPI (TRUSS PLATE INSTITUTE, 218 NORTH LEE STREET, SUITE 312, ALEXANDRIA, VA, 22314) AND WTCA (WOOD TRUSS COUNCIL OF AMERICA, 6300 ENTERPRISE LANE, MADISON, WI 53719) FOR SAFETY PRACTICES PRIOR TO PERFORMING THESE FUNCTIONS. UNLESS OTHERWISE INDICATED TOP CHORD SHALL HAVE PROPERLY ATTACHED STRUCTURAL PANELS AND BOTTOM CHORD SHALL HAVE A PROPERLY ATTACHED RIGID CEILING.

IMPORTANTFURNISH A COPY OF THIS DESIGN TO THE INSTALLATION CONTRACTOR. ITW BCG, INC. SHALL NOT BE RESPONSIBLE FOR ANY DEVIATION FROM THIS DESIGN; ANY FAILURE TO BUILD THE TRUSS IN CONFORMANCE WITH TPI; OR FABRICATING, HANDLING, SHIPPING, INSTALLING & BRACING OF TRUSSES. DESIGN CONFORMS WITH APPLICABLE PROVISIONS OF NDS (NATIONAL DESIGN SPEC. BY AF&PA) AND TPI. ITW BCG CONNECTOR PLATES ARE MADE OF 20/18/16GA (W,H/SS/K) ASTM A653 GRADE 40/60 (W, K/H,SS) GALV. STEEL. APPLY PLATES TO EACH FACE OF TRUSS AND, UNLESS OTHERWISE LOCATED ON THIS DESIGN, POSITION PER DRAWINGS 160A-Z. ANY INSPECTION OF PLATES FOLLOWED BY (I) SHALL BE PER ANNEX A3 OF TPI1-2002 SEC.3. A SEAL ON THIS DRAWING INDICATES ACCEPTANCE OF PROFESSIONAL ENGINEERING RESPONSIBILITY SOLELY FOR THE TRUSS COMPONENT DESIGN SHOWN. THE SUITABILITY AND USE OF THIS COMPONENT FOR ANY BUILDING IS THE RESPONSIBILITY OF THE BUILDING DESIGNER PER ANSI/TPI 1 SEC. 2.

DOUGLAS FLEMING LICENSE No. 66648 STATE OF FLORIDA PROFESSIONAL ENGINEER
[illegible] 18 '09

TC LL	20.0 PSF	REF	R8228- 60294
TC DL	10.0 PSF	DATE	12/18/09
BC DL	10.0 PSF	DRW	HCUSR8228 09352002
BC LL	0.0 PSF	HC-ENG	JB/DF
TOT.LD.	40.0 PSF	SEQN-	59107
DUR.FAC.	1.25	FROM	AH
SPACING	24.0"	JREF-	1TYP8228701

(9-244--Fill in later EDGLEY -- , ** - T42)

THIS DWG PREPARED FROM COMPUTER INPUT (LOADS & DIMENSIONS) SUBMITTED BY TRUSS MFR.

Top chord 2x4 SP #2 Dense
Bot chord 2x6 SP SS
Webs 2x4 SP #3

110 mph wind, 15.00 ft mean hgt, ASCE 7-05, CLOSED bldg, not located within 4.50 ft from roof edge, CAT II, EXP C, wind TC DL=5.0 psf, wind BC DL=5.0 psf. Iw=1.00 GCpi(+/-)=0.18

Wind reactions based on MWFRS pressures.

Deflection meets L/240 live and L/180 total load.

Special loads
------(Lumber Dur.Fac.=1.25 / Plate Dur.Fac.=1.25)
TC - From 62 plf at 0.00 to 62 plf at 7.00
BC - From 20 plf at 0.00 to 20 plf at 7.00
BC - 294 lb Conc. Load at 1.40 , 3.40, 5.40

Right end vertical not exposed to wind pressure.

H = recommended connection based on manufacturer tested capacities and calculations. Conditions may exist that require different connections than indicated. Refer to manufacturer publication for additional information.

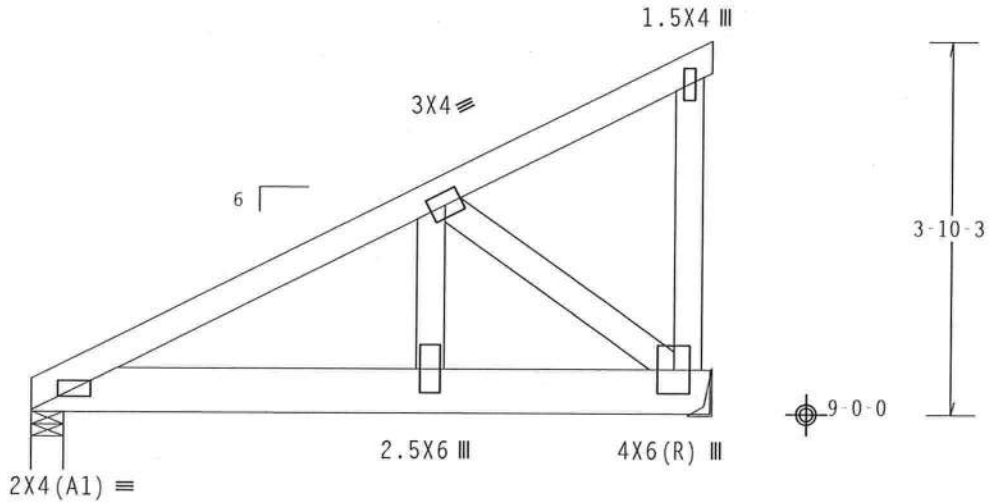

7-0-0 Over 2 Supports

R=749 U=143 W=4"

R=708 U=136 H=Simpson LU26
w/ (4) 10d, 0.148"x1.5" nails in Truss
w/ (6) 16d Common, 0.162"x3.5" nails in Girder
Girder is (1)2X6 min. So.Pine

Design Crit: FBC2007Res/TPI-2002(STD)

PLT TYP. Wave FT/RT=20%(0%)/0(0) 9.02.00 QTY:1 FL/-/4/-/-/R/- Scale =.5"/Ft.

WARNING TRUSSES REQUIRE EXTREME CARE IN FABRICATION, HANDLING, SHIPPING, INSTALLING AND BRACING. REFER TO BCSI (BUILDING COMPONENT SAFETY INFORMATION), PUBLISHED BY TPI (TRUSS PLATE INSTITUTE, 218 NORTH LEE STREET, SUITE 312, ALEXANDRIA, VA, 22314) AND WTCA (WOOD TRUSS COUNCIL OF AMERICA, 6300 ENTERPRISE LANE, MADISON, WI 53719) FOR SAFETY PRACTICES PRIOR TO PERFORMING THESE FUNCTIONS. UNLESS OTHERWISE INDICATED TOP CHORD SHALL HAVE PROPERLY ATTACHED STRUCTURAL PANELS AND BOTTOM CHORD SHALL HAVE A PROPERLY ATTACHED RIGID CEILING.

IMPORTANTFURNISH A COPY OF THIS DESIGN TO THE INSTALLATION CONTRACTOR. ITW BCG, INC. SHALL NOT BE RESPONSIBLE FOR ANY DEVIATION FROM THIS DESIGN; ANY FAILURE TO BUILD THE TRUSS IN CONFORMANCE WITH TPI; OR FABRICATING, HANDLING, SHIPPING, INSTALLING & BRACING OF TRUSSES.
DESIGN CONFORMS WITH APPLICABLE PROVISIONS OF NDS (NATIONAL DESIGN SPEC, BY AF&PA) AND TPI. ITW BCG CONNECTOR PLATES ARE MADE OF 20/18/16GA (W,H/SS/K) ASTM A653 GRADE 40/60 (W, K/H,SS) GALV. STEEL. APPLY PLATES TO EACH FACE OF TRUSS AND, UNLESS OTHERWISE LOCATED ON THIS DESIGN, POSITION PER DRAWINGS 160A-Z. ANY INSPECTION OF PLATES FOLLOWED BY (I) SHALL BE PER ANNEX A3 OF TPI1-2002 SEC.3. A SEAL ON THIS DRAWING INDICATES ACCEPTANCE OF PROFESSIONAL ENGINEERING RESPONSIBILITY SOLELY FOR THE TRUSS COMPONENT DESIGN SHOWN. THE SUITABILITY AND USE OF THIS COMPONENT FOR ANY BUILDING IS THE RESPONSIBILITY OF THE BUILDING DESIGNER PER ANSI/TPI 1 SEC. 2.

ALPINE
ITW Building Components Group Inc.
Haines City, FL 33844
FL COA #0 270

DOUGLAS FLEMING LICENSE No. 66648 STATE OF FLORIDA PROFESSIONAL ENGINEER
Dec 18 '09

TC LL	20.0 PSF	REF	R8228- 60295
TC DL	10.0 PSF	DATE	12/18/09
BC DL	10.0 PSF	DRW	HCUSR8228 09352003
BC LL	0.0 PSF	HC-ENG	JB/DF
TOT.LD.	40.0 PSF	SEQN-	58447
DUR.FAC.	1.25	FROM	AH
SPACING	24.0"	JREF	1TXD0229701

(9-244--Fill in later EDGLEY -- , ** - H7A)

THIS DWG PREPARED FROM COMPUTER INPUT (LOADS & DIMENSIONS) SUBMITTED BY TRUSS MFR.

Top chord 2x4 SP #2 Dense :T2, T3 2x8 SP #1 Dense:
Bot chord 2x6 SP #1 Dense :B2 2x6 SP SS:
Webs 2x4 SP #3 :W3, W9 2x4 SP #2 Dense:

Roof overhang supports 2.00 psf soffit load.

Calculated horizontal deflection is 0.14" due to live load and 0.15" due to dead load.

(A) 2x4 #3 or better "T" brace. 80% length of web member. Attach with 16d Box or Gun (0.135"x3.5",min.)nails @ 6" OC.

#1 hip supports 7-0-0 jacks with no webs.

Deflection meets L/240 live and L/180 total load.

Calculated vertical deflection is 0.75" due to live load and 0.79" due to dead load at X = 20-0-0.

(I) - plates so marked were sized using a Fabrication Tolerance of 0% and a Rotational Tolerance of 0 degrees.

110 mph wind, 15.00 ft mean hgt, ASCE 7-05, CLOSED bldg, not located within 4.50 ft from roof edge, CAT II, EXP C, wind TC DL=5.0 psf, wind BC DL=5.0 psf. Iw=1.00 GCpi(+/-)=0.18

Wind reactions based on MWFRS pressures.

In lieu of structural panels use purlins to brace all flat TC @ 24" OC.

Left side jacks have 7-0-0 setback with 0-0-0 cant and 1-10-8 overhang. End jacks have 7-0-0 setback with 0-0-0 cant and 1-10-8 overhang. Right side jacks have 7-0-0 setback with 0-0-0 cant and 1-10-8 overhang.

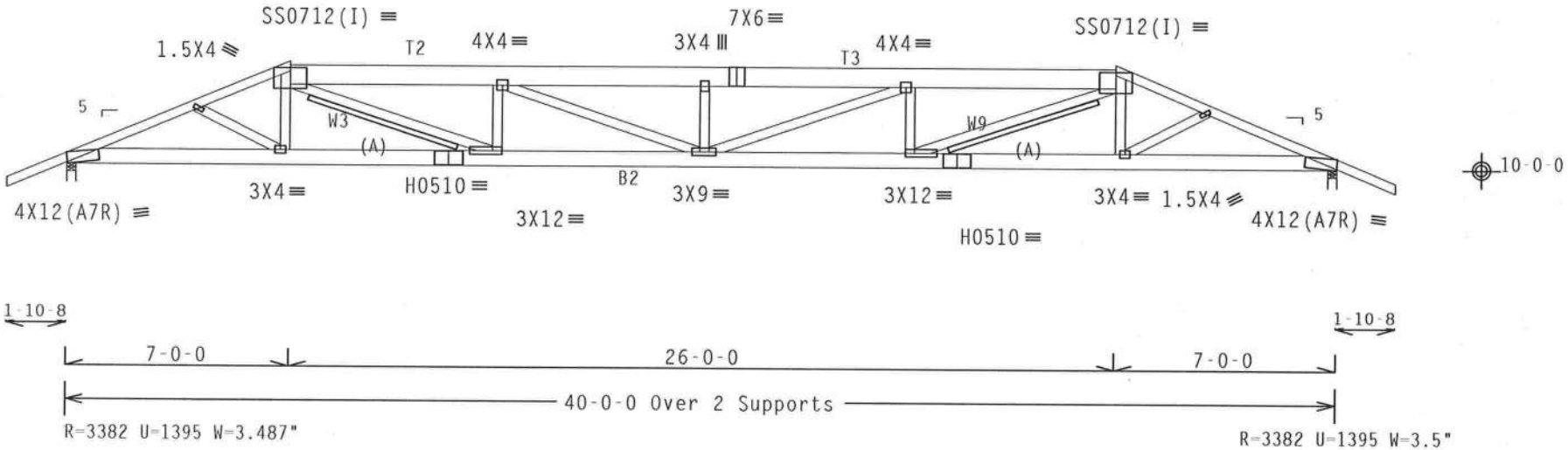

PLT TYP. 20 Gauge HS,18 Gauge HS, Wave

Design Crit: FBC2007Res/TPI-2002(STD)

FT/RT=20%(0%)/0(0)

9.02.00.0[illegible] QTY:1 FL/-/4/-/-/R/- Scale =.1875"/Ft.

ALPINE
ITW Building Components Group Inc.
Haines City, FL 33844
FL COA #0 278

WARNING TRUSSES REQUIRE EXTREME CARE IN FABRICATION, HANDLING, SHIPPING, INSTALLING AND BRACING. REFER TO BCSI (BUILDING COMPONENT SAFETY INFORMATION), PUBLISHED BY TPI (TRUSS PLATE INSTITUTE, 218 NORTH LEE STREET, SUITE 312, ALEXANDRIA, VA, 22314) AND WTCA (WOOD TRUSS COUNCIL OF AMERICA, 6300 ENTERPRISE LANE, MADISON, WI 53719) FOR SAFETY PRACTICES PRIOR TO PERFORMING THESE FUNCTIONS. UNLESS OTHERWISE INDICATED TOP CHORD SHALL HAVE PROPERLY ATTACHED STRUCTURAL PANELS AND BOTTOM CHORD SHALL HAVE A PROPERLY ATTACHED RIGID CEILING.

IMPORTANT FURNISH A COPY OF THIS DESIGN TO THE INSTALLATION CONTRACTOR. ITW BCG, INC. SHALL NOT BE RESPONSIBLE FOR ANY DEVIATION FROM THIS DESIGN; ANY FAILURE TO BUILD THE TRUSS IN CONFORMANCE WITH TPI; OR FABRICATING, HANDLING, SHIPPING, INSTALLING & BRACING OF TRUSSES. DESIGN CONFORMS WITH APPLICABLE PROVISIONS OF NDS (NATIONAL DESIGN SPEC, BY AF&PA) AND TPI. ITW BCG CONNECTOR PLATES ARE MADE OF 20/18/16GA (W,H/SS/K) ASTM A653 GRADE 40/60 (W, K/H,SS) GALV. STEEL. APPLY PLATES TO EACH FACE OF TRUSS AND, UNLESS OTHERWISE LOCATED ON THIS DESIGN, POSITION PER DRAWINGS 160A-2. ANY INSPECTION OF PLATES FOLLOWED BY (I) SHALL BE PER ANNEX A3 OF TPI1-2002 SEC.3. A SEAL ON THIS DRAWING INDICATES ACCEPTANCE OF PROFESSIONAL ENGINEERING RESPONSIBILITY SOLELY FOR THE TRUSS COMPONENT DESIGN SHOWN. THE SUITABILITY AND USE OF THIS COMPONENT FOR ANY BUILDING IS THE RESPONSIBILITY OF THE BUILDING DESIGNER PER ANSI/TPI 1 SEC. 2.

DOUGLAS FLEMING LICENSE No. 66648 STATE OF FLORIDA PROFESSIONAL ENGINEER

TC LL	20.0 PSF	REF	R8228- 60296
TC DL	10.0 PSF	DATE	12/18/09
BC DL	10.0 PSF	DRW	HCUSR8228 09352004
BC LL	0.0 PSF	HC-ENG	JB/DF
TOT.LD.	40.0 PSF	SEQN-	67592
DUR.FAC.	1.25	FROM	AH
SPACING	24.0"	JREF	1TYP0000701

18 '09

Top chord 2x4 SP #2 Dense
Bot chord 2x4 SP #2 Dense
Webs 2x4 SP #3

Roof overhang supports 2.00 psf soffit load.

(A) 1x4 #3SRB SPF-S or better "T" brace. 80% length of web member. Attach with 8d Box or Gun (0.113"x2.5",min.)nails @ 6" OC.

Deflection meets L/240 live and L/180 total load.

110 mph wind, 15.00 ft mean hgt, ASCE 7-05, CLOSED bldg, not located within 4.50 ft from roof edge, CAT II, EXP C, wind TC DL=5.0 psf, wind BC DL=5.0 psf. Iw=1.00 GCpi(+/-)=0.18

Wind reactions based on MWFRS pressures.

In lieu of structural panels use purlins to brace all flat TC @ 24" OC.

Bottom chord checked for 10.00 psf non-concurrent live load.

MWFRS loads based on trusses located at least 7.50 ft. from roof edge.

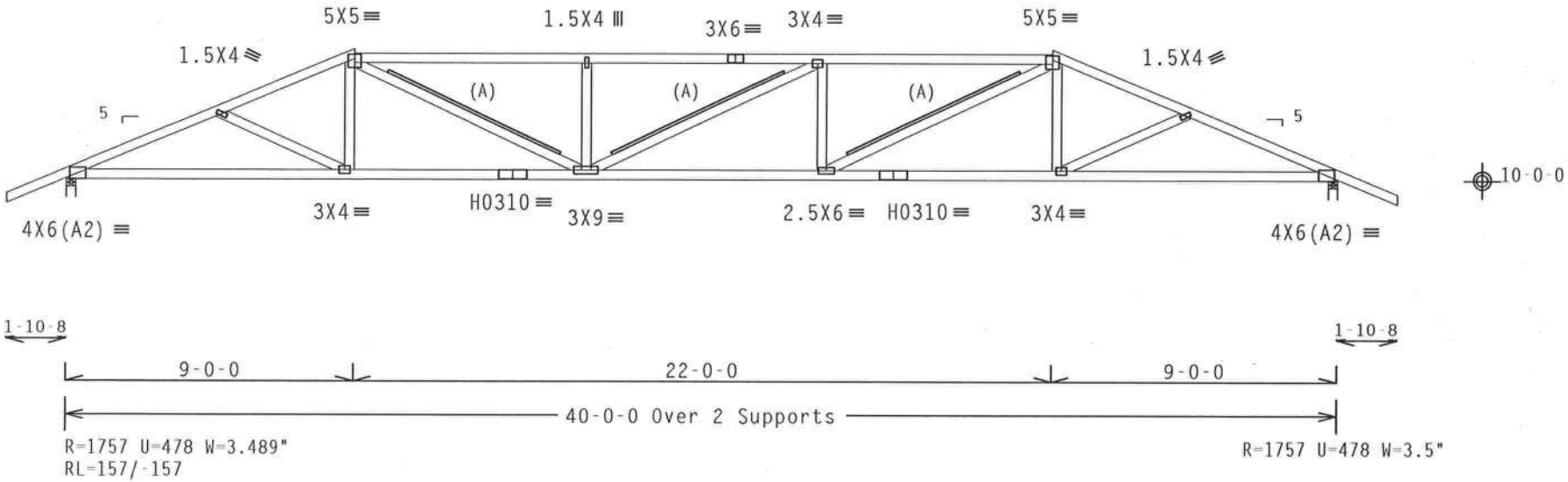

Design Crit: FBC2007Res/TPI-2002(STD)

PLT TYP. 20 Gauge HS,Wave FT/RT=20%(0%)/0(0) 9.02.00 (6/3/16) QTY:1 FL/-/4/-/-/R/- Scale =.1875"/Ft.

ALPINE
ITW Building Components Group Inc.
Haines City, FL 33844

WARNING TRUSSES REQUIRE EXTREME CARE IN FABRICATION, HANDLING, SHIPPING, INSTALLING AND BRACING. REFER TO BCSI (BUILDING COMPONENT SAFETY INFORMATION), PUBLISHED BY TPI (TRUSS PLATE INSTITUTE, 218 NORTH LEE STREET, SUITE 312, ALEXANDRIA, VA, 22314) AND WTCA (WOOD TRUSS COUNCIL OF AMERICA, 6300 ENTERPRISE LANE, MADISON, WI 53719) FOR SAFETY PRACTICES PRIOR TO PERFORMING THESE FUNCTIONS. UNLESS OTHERWISE INDICATED TOP CHORD SHALL HAVE PROPERLY ATTACHED STRUCTURAL PANELS AND BOTTOM CHORD SHALL HAVE A PROPERLY ATTACHED RIGID CEILING.

IMPORTANTFURNISH A COPY OF THIS DESIGN TO THE INSTALLATION CONTRACTOR. ITW BCG, INC. SHALL NOT BE RESPONSIBLE FOR ANY DEVIATION FROM THIS DESIGN; ANY FAILURE TO BUILD THE TRUSS IN CONFORMANCE WITH TPI; OR FABRICATING, HANDLING, SHIPPING, INSTALLING & BRACING OF TRUSSES. DESIGN CONFORMS WITH APPLICABLE PROVISIONS OF NDS (NATIONAL DESIGN SPEC. BY AF&PA) AND TPI. ITW BCG CONNECTOR PLATES ARE MADE OF 20/18/16GA (W,H/SS/K) ASTM A653 GRADE 40/60 (W, K/H,SS) GALV. STEEL. APPLY PLATES TO EACH FACE OF TRUSS AND. UNLESS OTHERWISE LOCATED ON THIS DESIGN, POSITION PER DRAWINGS 160A-Z. ANY INSPECTION OF PLATES FOLLOWED BY (I) SHALL BE PER ANNEX A3 OF TPI1-2002 SEC.3. A SEAL ON THIS DRAWING INDICATES ACCEPTANCE OF PROFESSIONAL ENGINEERING RESPONSIBILITY SOLELY FOR THE TRUSS COMPONENT DESIGN SHOWN. THE SUITABILITY AND USE OF THIS COMPONENT FOR ANY BUILDING IS THE RESPONSIBILITY OF THE BUILDING DESIGNER PER ANSI/TPI 1 SEC. 2.

DOUGLAS FLEMING LICENSE No.66648 STATE OF FLORIDA PROFESSIONAL ENGINEER

Dec 18 '09

TC LL	20.0 PSF	REF	R8228- 60297
TC DL	10.0 PSF	DATE	12/18/09
BC DL	10.0 PSF	DRW	HCUSR8228 09352005
BC LL	0.0 PSF	HC-ENG	JB/DF *
TOT.LD.	40.0 PSF	SEQN-	67599
DUR.FAC.	1.25	FROM	AH
SPACING	24.0"	IREF	1TYP8228701

(9-244--Fill in later EDGLEY -- , ** - H11A)

THIS DWG PREPARED FROM COMPUTER INPUT (LOADS & DIMENSIONS) SUBMITTED BY TRUSS MFR.

Top chord 2x4 SP #2 Dense
Bot chord 2x4 SP #2 Dense
Webs 2x4 SP #3

Roof overhang supports 2.00 psf soffit load.

In lieu of structural panels use purlins to brace all flat TC @ 24" OC.

MWFRS loads based on trusses located at least 7.50 ft. from roof edge.

110 mph wind, 15.00 ft mean hgt, ASCE 7-05, CLOSED bldg, not located within 4.50 ft from roof edge, CAT II, EXP C, wind TC DL=5.0 psf, wind BC DL=5.0 psf. Iw=1.00 GCpi(+/-)=0.18

Wind reactions based on MWFRS pressures.

Bottom chord checked for 10.00 psf non-concurrent live load.

Deflection meets L/240 live and L/180 total load.

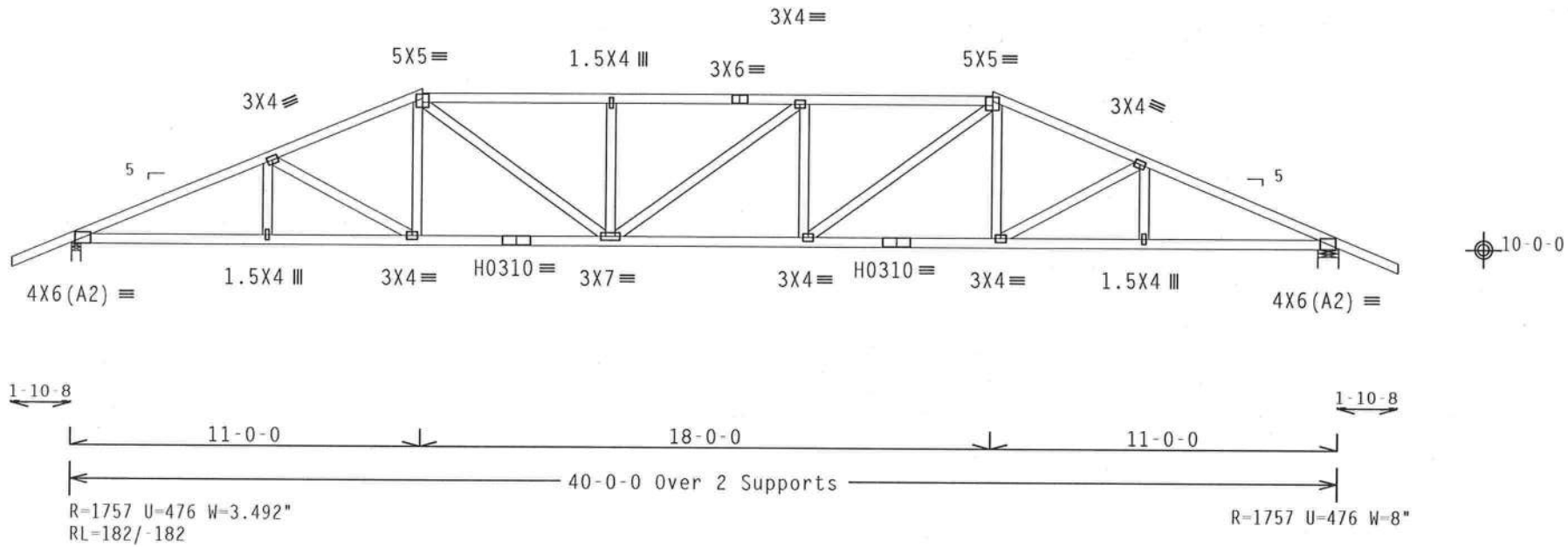

Design Crit: FBC2007Res/TPI-2002(STD)

PLT TYP. 20 Gauge HS,Wave | FT/RT=20%(0%)/0(0) | 9.02.00 [illegible] | QTY:1 | FL/-/4/-/-/R/- | Scale =.1875"/Ft.

ALPINE
ITW Building Components Group Inc.
Haines City, FL 33844
FL COA #0 [illegible]

WARNING TRUSSES REQUIRE EXTREME CARE IN FABRICATION, HANDLING, SHIPPING, INSTALLING AND BRACING. REFER TO BCSI (BUILDING COMPONENT SAFETY INFORMATION), PUBLISHED BY TPI (TRUSS PLATE INSTITUTE, 218 NORTH LEE STREET, SUITE 312, ALEXANDRIA, VA, 22314) AND WTCA (WOOD TRUSS COUNCIL OF AMERICA, 6300 ENTERPRISE LANE, MADISON, WI 53719) FOR SAFETY PRACTICES PRIOR TO PERFORMING THESE FUNCTIONS. UNLESS OTHERWISE INDICATED TOP CHORD SHALL HAVE PROPERLY ATTACHED STRUCTURAL PANELS AND BOTTOM CHORD SHALL HAVE A PROPERLY ATTACHED RIGID CEILING.

IMPORTANTFURNISH A COPY OF THIS DESIGN TO THE INSTALLATION CONTRACTOR. ITW BCG, INC. SHALL NOT BE RESPONSIBLE FOR ANY DEVIATION FROM THIS DESIGN; ANY FAILURE TO BUILD THE TRUSS IN CONFORMANCE WITH TPI; OR FABRICATING, HANDLING, SHIPPING, INSTALLING & BRACING OF TRUSSES.
DESIGN CONFORMS WITH APPLICABLE PROVISIONS OF NDS (NATIONAL DESIGN SPEC, BY AF&PA) AND TPI. ITW BCG CONNECTOR PLATES ARE MADE OF 20/18/16GA (W,H/SS/K) ASTM A653 GRADE 40/60 (W, K/H,SS) GALV. STEEL. APPLY PLATES TO EACH FACE OF TRUSS AND. UNLESS OTHERWISE LOCATED ON THIS DESIGN. POSITION PER DRAWINGS 160A-Z. ANY INSPECTION OF PLATES FOLLOWED BY (I) SHALL BE PER ANNEX A3 OF TPI1-2002 SEC.3. A SEAL ON THIS DRAWING INDICATES ACCEPTANCE OF PROFESSIONAL ENGINEERING RESPONSIBILITY SOLELY FOR THE TRUSS COMPONENT DESIGN SHOWN. THE SUITABILITY AND USE OF THIS COMPONENT FOR ANY BUILDING IS THE RESPONSIBILITY OF THE BUILDING DESIGNER PER ANSI/TPI 1 SEC. 2.

DOUGLAS FLEMING LICENSE No 36648 STATE OF FLORIDA PROFESSIONAL ENGINEER
[illegible] 18 '09

TC LL	20.0 PSF	REF	R8228- 60298
TC DL	10.0 PSF	DATE	12/18/09
BC DL	10.0 PSF	DRW	HCUSR8228 09352006
BC LL	0.0 PSF	HC-ENG	JB/DF *
TOT.LD.	40.0 PSF	SEQN-	67605
DUR.FAC.	1.25	FROM	AH
SPACING	24.0"	JREF	1TYP0220701

(9-244--Fill in later EDGLEY -- , ** - H13A)

THIS DWG PREPARED FROM COMPUTER INPUT (LOADS & DIMENSIONS) SUBMITTED BY TRUSS MFR.

Top chord 2x4 SP #2 Dense
Bot chord 2x4 SP #2 Dense
Webs 2x4 SP #3

Roof overhang supports 2.00 psf soffit load.

(A) 1x4 #3SRB SPF-S or better "T" brace. 80% length of web member. Attach with 8d Box or Gun (0.113"x2.5",min.)nails @ 6" OC.

Deflection meets L/240 live and L/180 total load.

110 mph wind, 15.00 ft mean hgt, ASCE 7-05, CLOSED bldg, not located within 4.50 ft from roof edge, CAT II, EXP C, wind TC DL=5.0 psf, wind BC DL=5.0 psf. Iw=1.00 GCpi(+/-)=0.18

Wind reactions based on MWFRS pressures.

In lieu of structural panels use purlins to brace all flat TC @ 24" OC.

Bottom chord checked for 10.00 psf non-concurrent live load.

MWFRS loads based on trusses located at least 7.50 ft. from roof edge.

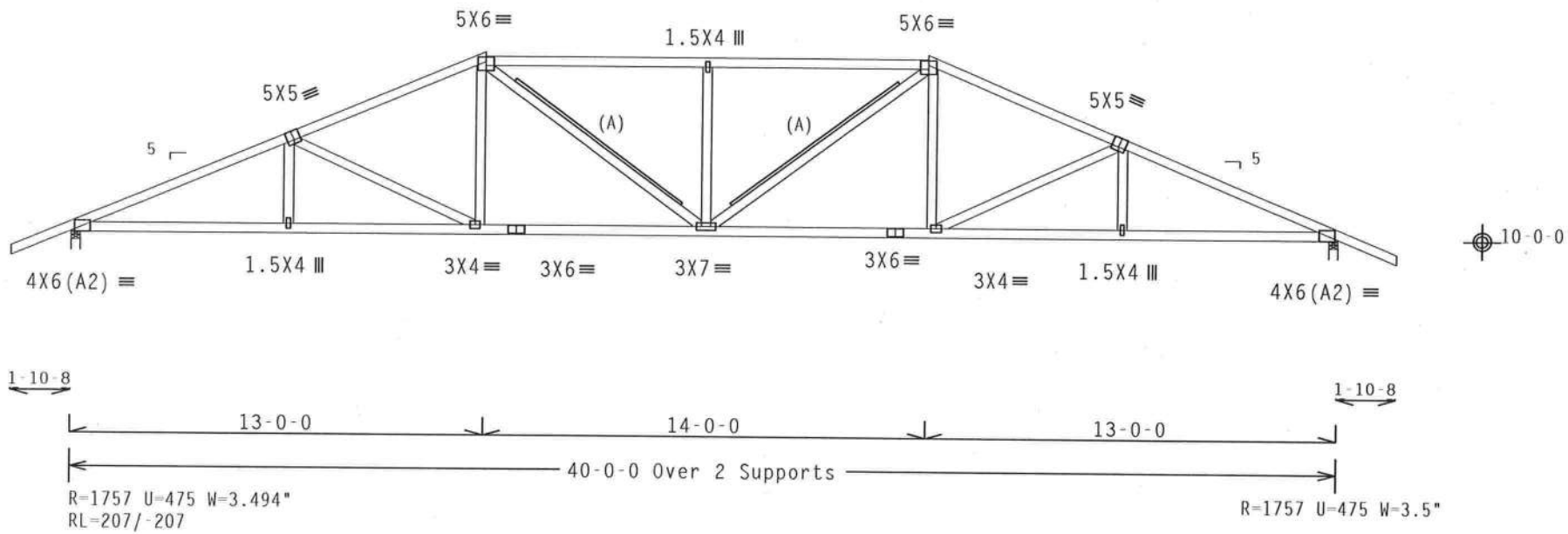

Design Crit: FBC2007Res/TPI-2002(STD)

PLT TYP. Wave | FT/RT=20%(0%)/0(0) | 9.02.00 | QTY:1 | FL/-/4/-/-/R/- | Scale =.1875"/Ft.

ALPINE
ITW Building Components Group Inc.
Haines City, FL 33844

WARNING TRUSSES REQUIRE EXTREME CARE IN FABRICATION, HANDLING, SHIPPING, INSTALLING AND BRACING. REFER TO BCSI (BUILDING COMPONENT SAFETY INFORMATION), PUBLISHED BY TPI (TRUSS PLATE INSTITUTE, 218 NORTH LEE STREET, SUITE 312, ALEXANDRIA, VA, 22314) AND WTCA (WOOD TRUSS COUNCIL OF AMERICA, 6300 ENTERPRISE LANE, MADISON, WI 53719) FOR SAFETY PRACTICES PRIOR TO PERFORMING THESE FUNCTIONS. UNLESS OTHERWISE INDICATED TOP CHORD SHALL HAVE PROPERLY ATTACHED STRUCTURAL PANELS AND BOTTOM CHORD SHALL HAVE A PROPERLY ATTACHED RIGID CEILING.

IMPORTANT FURNISH A COPY OF THIS DESIGN TO THE INSTALLATION CONTRACTOR. ITW BCG, INC. SHALL NOT BE RESPONSIBLE FOR ANY DEVIATION FROM THIS DESIGN; ANY FAILURE TO BUILD THE TRUSS IN CONFORMANCE WITH TPI; OR FABRICATING, HANDLING, SHIPPING, INSTALLING & BRACING OF TRUSSES. DESIGN CONFORMS WITH APPLICABLE PROVISIONS OF NDS (NATIONAL DESIGN SPEC. BY AF&PA) AND TPI. ITW BCG CONNECTOR PLATES ARE MADE OF 20/18/16GA (W,H/SS/K) ASTM A653 GRADE 40/60 (W, K/H,SS) GALV. STEEL. APPLY PLATES TO EACH FACE OF TRUSS AND, UNLESS OTHERWISE LOCATED ON THIS DESIGN, POSITION PER DRAWINGS 160A-Z. ANY INSPECTION OF PLATES FOLLOWED BY (I) SHALL BE PER ANNEX A3 OF TPI1-2002 SEC.3. A SEAL ON THIS DRAWING INDICATES ACCEPTANCE OF PROFESSIONAL ENGINEERING RESPONSIBILITY SOLELY FOR THE TRUSS COMPONENT DESIGN SHOWN. THE SUITABILITY AND USE OF THIS COMPONENT FOR ANY BUILDING IS THE RESPONSIBILITY OF THE BUILDING DESIGNER PER ANSI/TPI 1 SEC. 2.

DOUGLAS FLEMING LICENSE No. 66648 STATE OF FLORIDA PROFESSIONAL ENGINEER

TC LL	20.0 PSF	REF R8228- 60299
TC DL	10.0 PSF	DATE 12/18/09
BC DL	10.0 PSF	DRW HCUSR8228 09352007
BC LL	0.0 PSF	HC-ENG JB/DF *
TOT.LD.	40.0 PSF	SEQN- 67614
DUR.FAC.	1.25	FROM AH

'09

(9-244--Fill in later EDGLEY -- , ** - H15A)

THIS DWG PREPARED FROM COMPUTER INPUT (LOADS & DIMENSIONS) SUBMITTED BY TRUSS MFR.

Top chord 2x4 SP #2 Dense
Bot chord 2x4 SP #2 Dense
Webs 2x4 SP #3

Roof overhang supports 2.00 psf soffit load.

In lieu of structural panels use purlins to brace all flat TC @ 24" OC.

Bottom chord checked for 10.00 psf non-concurrent live load.

MWFRS loads based on trusses located at least 15.00 ft. from roof edge.

110 mph wind, 15.00 ft mean hgt, ASCE 7-05, CLOSED bldg, not located within 4.50 ft from roof edge, CAT II, EXP C, wind TC DL=5.0 psf, wind BC DL=5.0 psf. Iw=1.00 GCpi(+/-)=0.18

Wind reactions based on MWFRS pressures.

Truss passed check for 20 psf additional bottom chord live load in areas with 42"-high x 24"-wide clearance.

Deflection meets L/240 live and L/180 total load.

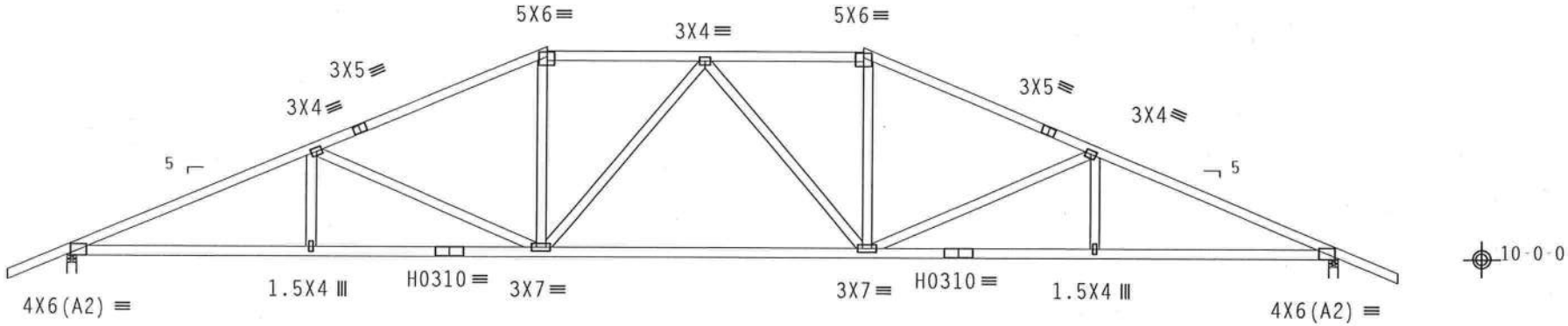

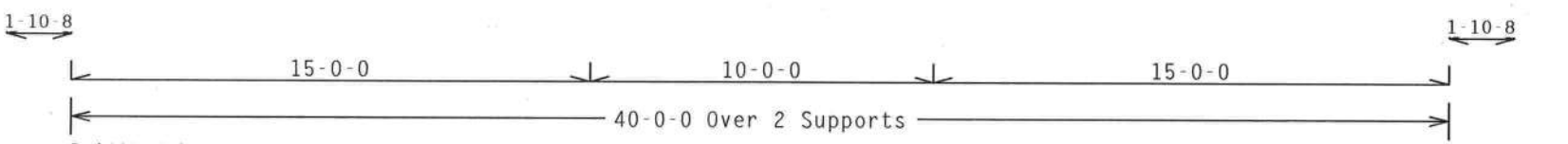

R=1829 U=167 W=3.496"
RL=231/-231

R=1829 U=167 W=3.5"

Design Crit: FBC2007Res/TPI-2002(STD)

PLT TYP. 20 Gauge HS,Wave FT/RT=20%(0%)/0(0) 9.02.00.0[illegible] QTY:1 FL/-/4/-/-/R/- Scale =.1875"/Ft.

ALPINE
ITW Building Components Group Inc.
Haines City, FL 33844

WARNING TRUSSES REQUIRE EXTREME CARE IN FABRICATION, HANDLING, SHIPPING, INSTALLING AND BRACING. REFER TO BCSI (BUILDING COMPONENT SAFETY INFORMATION), PUBLISHED BY TPI (TRUSS PLATE INSTITUTE, 218 NORTH LEE STREET, SUITE 312, ALEXANDRIA, VA, 22314) AND WTCA (WOOD TRUSS COUNCIL OF AMERICA, 6300 ENTERPRISE LANE, MADISON, WI 53719) FOR SAFETY PRACTICES PRIOR TO PERFORMING THESE FUNCTIONS. UNLESS OTHERWISE INDICATED TOP CHORD SHALL HAVE PROPERLY ATTACHED STRUCTURAL PANELS AND BOTTOM CHORD SHALL HAVE A PROPERLY ATTACHED RIGID CEILING.

IMPORTANTFURNISH A COPY OF THIS DESIGN TO THE INSTALLATION CONTRACTOR. ITW BCG, INC. SHALL NOT BE RESPONSIBLE FOR ANY DEVIATION FROM THIS DESIGN; ANY FAILURE TO BUILD THE TRUSS IN CONFORMANCE WITH TPI; OR FABRICATING, HANDLING, SHIPPING, INSTALLING & BRACING OF TRUSSES. DESIGN CONFORMS WITH APPLICABLE PROVISIONS OF NDS (NATIONAL DESIGN SPEC. BY AF&PA) AND TPI. ITW BCG CONNECTOR PLATES ARE MADE OF 20/18/16GA (W,H/SS/K) ASTM A653 GRADE 40/60 (W, K/H,SS) GALV. STEEL. APPLY PLATES TO EACH FACE OF TRUSS AND, UNLESS OTHERWISE LOCATED ON THIS DESIGN, POSITION PER DRAWINGS 160A-Z. ANY INSPECTION OF PLATES FOLLOWED BY (I) SHALL BE PER ANNEX A3 OF TPI1-2002 SEC.3. A SEAL ON THIS DRAWING INDICATES ACCEPTANCE OF PROFESSIONAL ENGINEERING RESPONSIBILITY SOLELY FOR THE TRUSS COMPONENT DESIGN SHOWN. THE SUITABILITY AND USE OF THIS COMPONENT FOR ANY BUILDING IS THE RESPONSIBILITY OF THE BUILDING DESIGNER PER ANSI/TPI 1 SEC. 2.

DOUGLAS FLEMING LICENSE No. 66648 STATE OF FLORIDA PROFESSIONAL ENGINEER

TC LL	20.0 PSF	REF	R8228- 60300
TC DL	10.0 PSF	DATE	12/18/09
BC DL	10.0 PSF	DRW	HCUSR8228 09352008
BC LL	0.0 PSF	HC-ENG	JB/DF *
TOT.LD.	40.0 PSF	SEQN-	67622
DUR.FAC.	1.25		
SPACING	24.0"	IREF	1TYP0220701

18 '09

(9-244--Fill in later EDGLEY -- , ** - H17A)

Top chord 2x4 SP #2 Dense
Bot chord 2x4 SP #2 Dense
Webs 2x4 SP #3

Roof overhang supports 2.00 psf soffit load.

(A) 1x4 #3SRB SPF-S or better "T" brace. 80% length of web member. Attach with 8d Box or Gun (0.113"x2.5",min.)nails @ 6" OC.

Bottom chord checked for 10.00 psf non-concurrent live load.

Deflection meets L/240 live and L/180 total load.

110 mph wind, 15.00 ft mean hgt, ASCE 7-05, CLOSED bldg, not located within 4.50 ft from roof edge, CAT II, EXP C, wind TC DL=5.0 psf, wind BC DL=5.0 psf. Iw=1.00 GCpi(+/-)=0.18

Wind reactions based on MWFRS pressures.

In lieu of structural panels use purlins to brace all flat TC @ 24" OC.

Truss passed check for 20 psf additional bottom chord live load in areas with 42"-high x 24"-wide clearance.

MWFRS loads based on trusses located at least 15.00 ft. from roof edge.

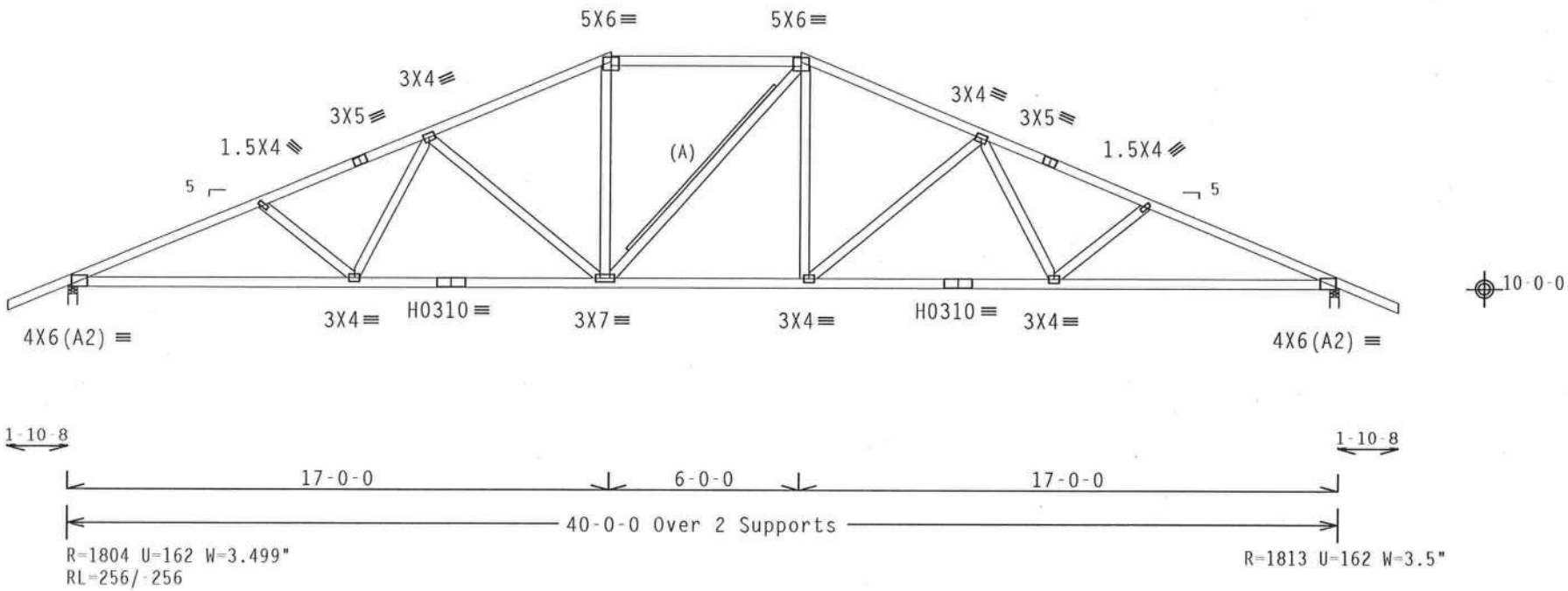

Design Crit: FBC2007Res/TPI-2002(STD)

PLT TYP. 20 Gauge HS,Wave FT/RT=20%(0%)/0(0) 9.02.00 QTY:1 FL/-/4/-/-/R/- Scale =.1875"/Ft.

ALPINE
ITW Building Components Group Inc.
Haines City, FL 33844

WARNING TRUSSES REQUIRE EXTREME CARE IN FABRICATION, HANDLING, SHIPPING, INSTALLING AND BRACING. REFER TO BCSI (BUILDING COMPONENT SAFETY INFORMATION), PUBLISHED BY TPI (TRUSS PLATE INSTITUTE, 218 NORTH LEE STREET, SUITE 312, ALEXANDRIA, VA, 22314) AND WTCA (WOOD TRUSS COUNCIL OF AMERICA, 6300 ENTERPRISE LANE, MADISON, WI 53719) FOR SAFETY PRACTICES PRIOR TO PERFORMING THESE FUNCTIONS. UNLESS OTHERWISE INDICATED TOP CHORD SHALL HAVE PROPERLY ATTACHED STRUCTURAL PANELS AND BOTTOM CHORD SHALL HAVE A PROPERLY ATTACHED RIGID CEILING.

IMPORTANTFURNISH A COPY OF THIS DESIGN TO THE INSTALLATION CONTRACTOR. ITW BCG, INC. SHALL NOT BE RESPONSIBLE FOR ANY DEVIATION FROM THIS DESIGN; ANY FAILURE TO BUILD THE TRUSS IN CONFORMANCE WITH TPI; OR FABRICATING, HANDLING, SHIPPING, INSTALLING & BRACING OF TRUSSES.
DESIGN CONFORMS WITH APPLICABLE PROVISIONS OF NDS (NATIONAL DESIGN SPEC. BY AF&PA) AND TPI. ITW BCG CONNECTOR PLATES ARE MADE OF 20/18/16GA (W,H/SS/K) ASTM A653 GRADE 40/60 (W, K/H,SS) GALV. STEEL. APPLY PLATES TO EACH FACE OF TRUSS AND, UNLESS OTHERWISE LOCATED ON THIS DESIGN, POSITION PER DRAWINGS 160A-Z. ANY INSPECTION OF PLATES FOLLOWED BY (I) SHALL BE PER ANNEX A3 OF TPI1-2002 SEC.3. A SEAL ON THIS DRAWING INDICATES ACCEPTANCE OF PROFESSIONAL ENGINEERING RESPONSIBILITY SOLELY FOR THE TRUSS COMPONENT DESIGN SHOWN. THE SUITABILITY AND USE OF THIS COMPONENT FOR ANY BUILDING IS THE RESPONSIBILITY OF THE BUILDING DESIGNER PER ANSI/TPI 1 SEC. 2.

DOUGLAS FLEMING LICENSE No. 66648 STATE OF FLORIDA PROFESSIONAL ENGINEER

TC LL	20.0 PSF	REF	R8228- 60301
TC DL	10.0 PSF	DATE	12/18/09
BC DL	10.0 PSF	DRW	HCUSR8228 09352009
BC LL	0.0 PSF	HC-ENG	JB/DF *
TOT.LD.	40.0 PSF	SEQN-	67631
DUR.FAC.	1.25		
SPACING	24.0"	JREF-	1TYP8228701

18 '09

(9-244--Fill in later EDGLEY -- , ** - H19A)

THIS DWG PREPARED FROM COMPUTER INPUT (LOADS & DIMENSIONS) SUBMITTED BY TRUSS MFR.

Top chord 2x4 SP #2 Dense
Bot chord 2x4 SP #2 Dense
Webs 2x4 SP #3

Roof overhang supports 2.00 psf soffit load.

In lieu of structural panels use purlins to brace all flat TC @ 24" OC.

Bottom chord checked for 10.00 psf non-concurrent live load.

MWFRS loads based on trusses located at least 15.00 ft. from roof edge.

SPECIAL LOADS
------(LUMBER DUR.FAC.=1.25 / PLATE DUR.FAC.=1.25)

TC - From	66 PLF	at -1.87	to	66 PLF	at 0.00
TC - From	62 PLF	at 0.00	to	62 PLF	at 40.00
TC - From	66 PLF	at 40.00	to	66 PLF	at 41.87
BC - From	20 PLF	at 0.00	to	20 PLF	at 12.12
BC - From	60 PLF	at 12.12	to	60 PLF	at 14.54
BC - From	20 PLF	at 14.54	to	20 PLF	at 25.58
BC - From	60 PLF	at 25.58	to	60 PLF	at 27.92
BC - From	20 PLF	at 27.92	to	20 PLF	at 40.00

110 mph wind, 15.00 ft mean hgt, ASCE 7-05, CLOSED bldg, not located within 4.50 ft from roof edge, CAT II, EXP C, wind TC DL=5.0 psf, wind BC DL=5.0 psf. Iw=1.00 GCpi(+/-)=0.18

Wind reactions based on MWFRS pressures.

Truss passed check for 20 psf additional bottom chord live load in areas with 42"-high x 24"-wide clearance.

Deflection meets L/240 live and L/180 total load.

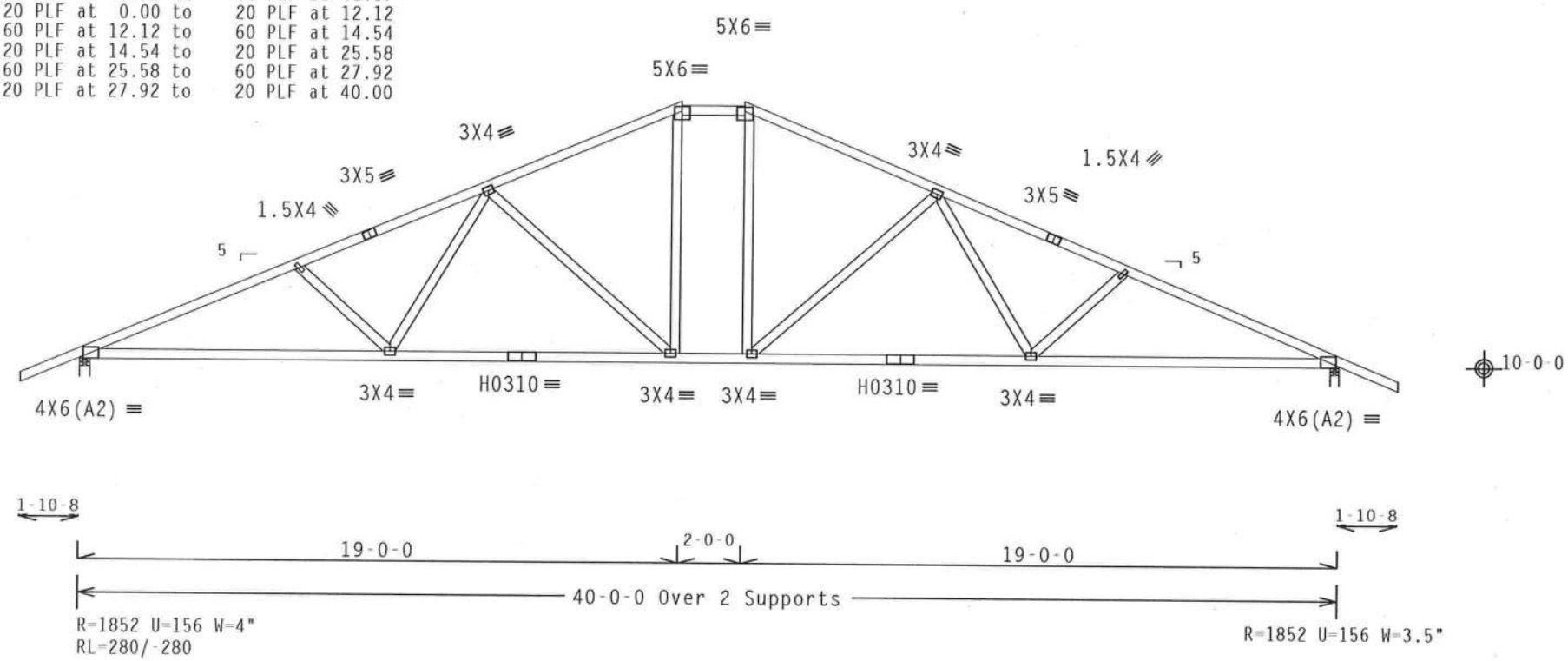

Design Crit: FBC2007Res/TPI-2002(STD)

PLT TYP. 20 Gauge HS,Wave FT/RT=20%(0%)/0(0) 9.02.00 QTY:1 FL/-/4/-/-/R/- Scale =.1875"/Ft.

ALPINE
ITW Building Components Group Inc.
Haines City, FL 33844

WARNING TRUSSES REQUIRE EXTREME CARE IN FABRICATION, HANDLING, SHIPPING, INSTALLING AND BRACING. REFER TO BCSI (BUILDING COMPONENT SAFETY INFORMATION), PUBLISHED BY TPI (TRUSS PLATE INSTITUTE, 218 NORTH LEE STREET, SUITE 312, ALEXANDRIA, VA, 22314) AND WTCA (WOOD TRUSS COUNCIL OF AMERICA, 6300 ENTERPRISE LANE, MADISON, WI 53719) FOR SAFETY PRACTICES PRIOR TO PERFORMING THESE FUNCTIONS. UNLESS OTHERWISE INDICATED TOP CHORD SHALL HAVE PROPERLY ATTACHED STRUCTURAL PANELS AND BOTTOM CHORD SHALL HAVE A PROPERLY ATTACHED RIGID CEILING.

IMPORTANT FURNISH A COPY OF THIS DESIGN TO THE INSTALLATION CONTRACTOR. ITW BCG, INC. SHALL NOT BE RESPONSIBLE FOR ANY DEVIATION FROM THIS DESIGN; ANY FAILURE TO BUILD THE TRUSS IN CONFORMANCE WITH TPI; OR FABRICATING, HANDLING, SHIPPING, INSTALLING & BRACING OF TRUSSES. DESIGN CONFORMS WITH APPLICABLE PROVISIONS OF NDS (NATIONAL DESIGN SPEC. BY AF&PA) AND TPI. ITW BCG CONNECTOR PLATES ARE MADE OF 20/18/16GA (W.H/SS/K) ASTM A653 GRADE 40/60 (H, K/H,SS) GALV. STEEL. APPLY PLATES TO EACH FACE OF TRUSS AND, UNLESS OTHERWISE LOCATED ON THIS DESIGN, POSITION PER DRAWINGS 160A-2. ANY INSPECTION OF PLATES FOLLOWED BY (1) SHALL BE PER ANNEX A3 OF TPI1-2002 SEC.3. A SEAL ON THIS DRAWING INDICATES ACCEPTANCE OF PROFESSIONAL ENGINEERING RESPONSIBILITY SOLELY FOR THE TRUSS COMPONENT DESIGN SHOWN. THE SUITABILITY AND USE OF THIS COMPONENT FOR ANY BUILDING IS THE RESPONSIBILITY OF THE BUILDING DESIGNER PER ANSI/TPI 1 SEC. 2.

DOUGLAS FLEMING LICENSE No. 66648 STATE OF FLORIDA PROFESSIONAL ENGINEER

TC LL	20.0 PSF	REF R8228- 60302
TC DL	10.0 PSF	DATE 12/18/09
BC DL	10.0 PSF	DRW HCUSR8228 09352010
BC LL	0.0 PSF	HC-ENG JB/DF *
TOT.LD.	40.0 PSF	SEQN- 67636
DUR.FAC.	1.25	

18 '09

(9-244--Fill in later EDGLEY -- , ** - A)

THIS DWG PREPARED FROM COMPUTER INPUT (LOADS & DIMENSIONS) SUBMITTED BY TRUSS MFR.

Top chord 2x4 SP #2 Dense
Bot chord 2x4 SP #2 Dense
Webs 2x4 SP #3

Roof overhang supports 2.00 psf soffit load.

(A) Continuous lateral bracing equally spaced on member.

Bottom chord checked for 10.00 psf non-concurrent live load.

MWFRS loads based on trusses located at least 15.00 ft. from roof edge.

110 mph wind, 15.00 ft mean hgt, ASCE 7-05, CLOSED bldg, not located within 4.50 ft from roof edge, CAT II, EXP C, wind TC DL=5.0 psf, wind BC DL=5.0 psf. Iw=1.00 GCpi(+/-)=0.18

Wind reactions based on MWFRS pressures.

Truss passed check for 20 psf additional bottom chord live load in areas with 42"-high x 24"-wide clearance.

Deflection meets L/240 live and L/180 total load.

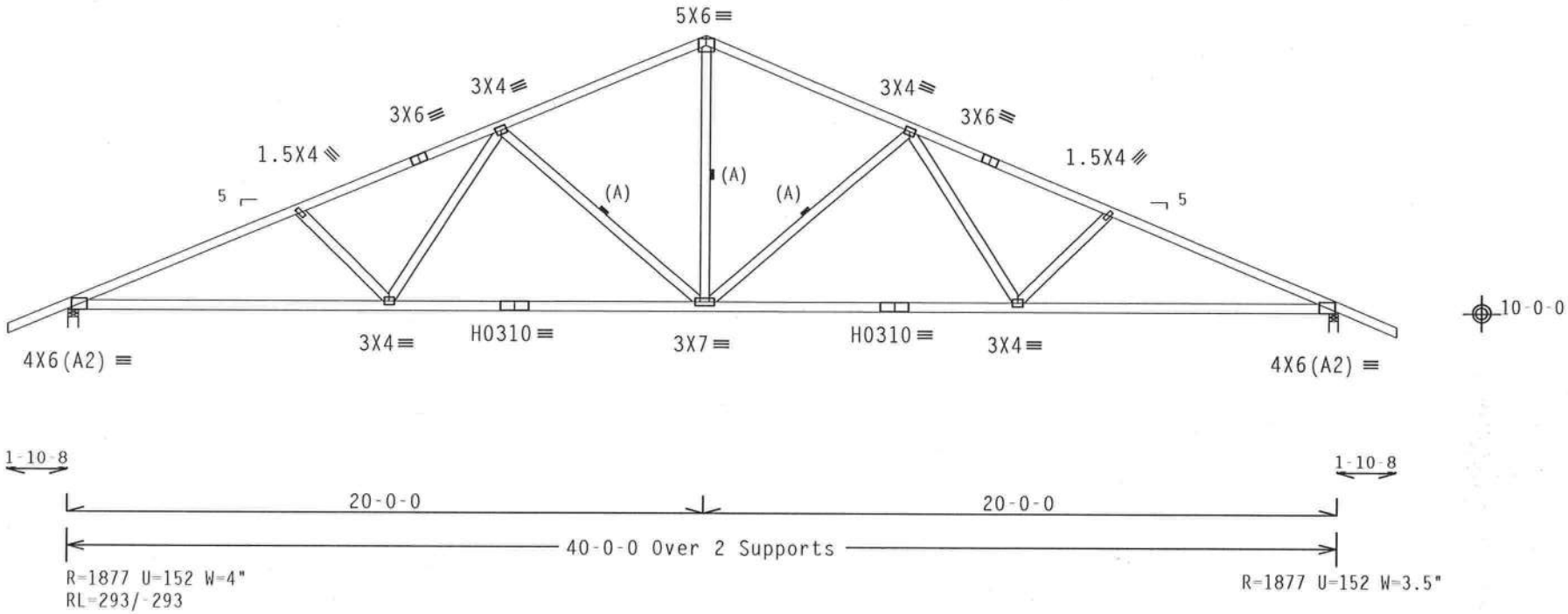

Design Crit: FBC2007Res/TPI-2002(STD)

PLT TYP. 20 Gauge HS,Wave | FT/RT=20%(0%)/0(0) | 9.02.00 [illegible] | QTY:7 | FL/-/4/-/-/R/- | Scale =.1875"/Ft.

ALPINE
ITW Building Components Group Inc.
Haines City, FL 33844
FL COA #0 [illegible]

WARNING TRUSSES REQUIRE EXTREME CARE IN FABRICATION, HANDLING, SHIPPING, INSTALLING AND BRACING. REFER TO BCSI (BUILDING COMPONENT SAFETY INFORMATION), PUBLISHED BY TPI (TRUSS PLATE INSTITUTE, 218 NORTH LEE STREET, SUITE 312, ALEXANDRIA, VA, 22314) AND WTCA (WOOD TRUSS COUNCIL OF AMERICA, 6300 ENTERPRISE LANE, MADISON, WI 53719) FOR SAFETY PRACTICES PRIOR TO PERFORMING THESE FUNCTIONS. UNLESS OTHERWISE INDICATED TOP CHORD SHALL HAVE PROPERLY ATTACHED STRUCTURAL PANELS AND BOTTOM CHORD SHALL HAVE A PROPERLY ATTACHED RIGID CEILING.

IMPORTANTFURNISH A COPY OF THIS DESIGN TO THE INSTALLATION CONTRACTOR. ITW BCG, INC. SHALL NOT BE RESPONSIBLE FOR ANY DEVIATION FROM THIS DESIGN; ANY FAILURE TO BUILD THE TRUSS IN CONFORMANCE WITH TPI; OR FABRICATING, HANDLING, SHIPPING, INSTALLING & BRACING OF TRUSSES.
DESIGN CONFORMS WITH APPLICABLE PROVISIONS OF NDS (NATIONAL DESIGN SPEC. BY AF&PA) AND TPI. ITW BCG CONNECTOR PLATES ARE MADE OF 20/18/16GA (W,H/SS/K) ASTM A653 GRADE 40/60 (W, K/H,SS) GALV. STEEL. APPLY PLATES TO EACH FACE OF TRUSS AND, UNLESS OTHERWISE LOCATED ON THIS DESIGN, POSITION PER DRAWINGS 160A-Z. ANY INSPECTION OF PLATES FOLLOWED BY (1) SHALL BE PER ANNEX A3 OF TPI1-2002 SEC.3. A SEAL ON THIS DRAWING INDICATES ACCEPTANCE OF PROFESSIONAL ENGINEERING RESPONSIBILITY SOLELY FOR THE TRUSS COMPONENT DESIGN SHOWN. THE SUITABILITY AND USE OF THIS COMPONENT FOR ANY BUILDING IS THE RESPONSIBILITY OF THE BUILDING DESIGNER PER ANSI/TPI 1 SEC. 2.

DOUGLAS FLEMING LICENSE No. 66648 STATE OF FLORIDA PROFESSIONAL ENGINEER

[illegible] 18 '09

TC LL	20.0 PSF	REF	R8228- 60303
TC DL	10.0 PSF	DATE	12/18/09
BC DL	10.0 PSF	DRW	HCUSR8228 09352011
BC LL	0.0 PSF	HC-ENG	JB/DF *
TOT.LD.	40.0 PSF	SEQN-	67641
DUR.FAC.	1.25		
SPACING	24.0"	JREF-	1TYP8228701

(9-244--Fill in later EDGLEY -- , ** - AG)

THIS DWG PREPARED FROM COMPUTER INPUT (LOADS & DIMENSIONS) SUBMITTED BY TRUSS MFR.

Top chord 2x4 SP #2 Dense
Bot chord 2x8 SP SS :B3 2x8 SP #1 Dense:
Webs 2x4 SP #3 :W5, W6, W8, W9 2x4 SP #2 Dense:
:Lt Wedge 2x4 SP #3::Rt Wedge 2x4 SP #3:

Special loads
------(Lumber Dur.Fac.=1.25 / Plate Dur.Fac.=1.25)
TC - From 62 plf at 0.00 to 62 plf at 20.00
TC - From 62 plf at 20.00 to 62 plf at 41.87
BC - From 20 plf at 0.00 to 20 plf at 40.00
BC - From 4 plf at 40.00 to 4 plf at 41.87
BC - 1312 lb Conc. Load at 1.94
BC - 1307 lb Conc. Load at 2.94 , 4.94, 6.94
BC - 1139 lb Conc. Load at 8.94
BC - 1153 lb Conc. Load at 10.94 , 12.94
BC - 1311 lb Conc. Load at 14.94
BC - 1329 lb Conc. Load at 16.94
BC - 1515 lb Conc. Load at 18.94
BC - 1523 lb Conc. Load at 20.94
BC - 1486 lb Conc. Load at 22.94

Wind reactions based on MWFRS pressures.

(A) #3 or better scab brace. Same size & 80% length of web member. Attach with 10d Box or Gun (0.128"x3",min.)nails @ 6" OC.

2 COMPLETE TRUSSES REQUIRED

Nail Schedule:0.131"x3" nails
Top Chord: 1 Row @12.00" o.c.
Bot Chord: 1 Row @ 4.00" o.c.
Webs : 1 Row @ 4" o.c.
Use equal spacing between rows and stagger nails in each row to avoid splitting.

Brg blocks:0.131"x3" nails

brg	x-loc	#blocks	length/blk	#nails/blk	wall plate
2	24.333'	2	12"	15	Rigid Surface

Brg block to be same size and species as bottom chord.
Refer to drawing CNNAILSP0109 for more information.

** Negative reaction(s) of -898# MAX. (See below) from a non-wind load case requires uplift connection.

110 mph wind, 15.00 ft mean hgt, ASCE 7-05, CLOSED bldg, not located within 4.50 ft from roof edge, CAT II, EXP C, wind TC DL=5.0 psf, wind BC DL=5.0 psf. Iw=1.00 GCpi(+/-)=0.18

Roof overhang supports 2.00 psf soffit load.

Deflection meets L/240 live and L/180 total load.

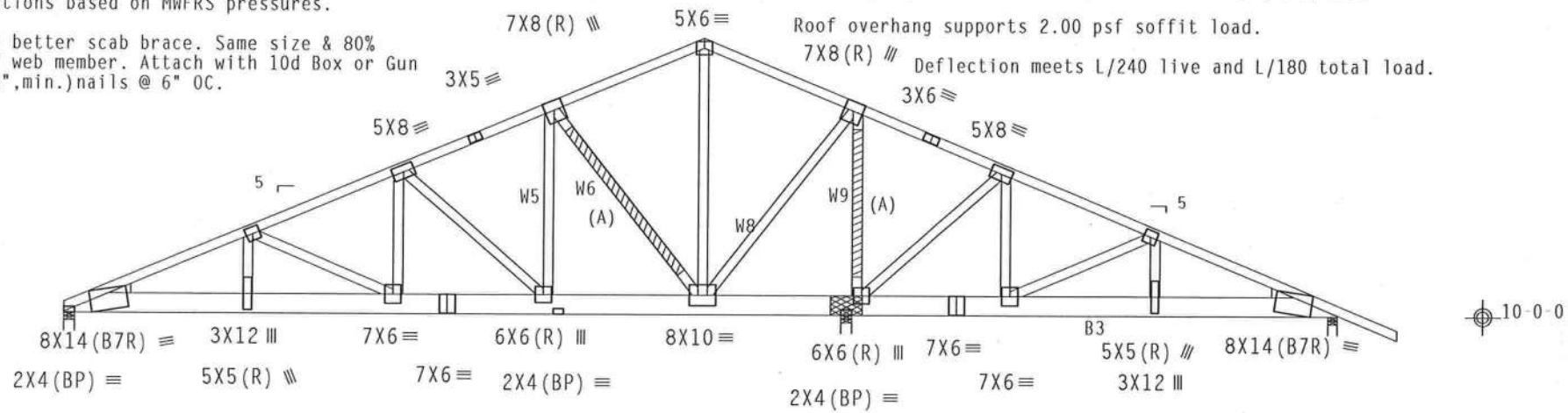

Design Crit: FBC2007Res/TPI-2002(STD)
FT/RT=20%(0%)/0(0)

PLT TYP. Wave | 9.02.00 | QTY:1 | FL/-/4/-/-/R/- | Scale =.1875"/Ft.

ALPINE
ITW Building Components Group Inc.
Haines City, FL 33844

WARNING TRUSSES REQUIRE EXTREME CARE IN FABRICATION, HANDLING, SHIPPING, INSTALLING AND BRACING. REFER TO BCSI (BUILDING COMPONENT SAFETY INFORMATION), PUBLISHED BY TPI (TRUSS PLATE INSTITUTE, 218 NORTH LEE STREET, SUITE 312, ALEXANDRIA, VA, 22314) AND WTCA (WOOD TRUSS COUNCIL OF AMERICA, 6300 ENTERPRISE LANE, MADISON, WI 53719) FOR SAFETY PRACTICES PRIOR TO PERFORMING THESE FUNCTIONS. UNLESS OTHERWISE INDICATED TOP CHORD SHALL HAVE PROPERLY ATTACHED STRUCTURAL PANELS AND BOTTOM CHORD SHALL HAVE A PROPERLY ATTACHED RIGID CEILING.

IMPORTANTFURNISH A COPY OF THIS DESIGN TO THE INSTALLATION CONTRACTOR. ITW BCG, INC. SHALL NOT BE RESPONSIBLE FOR ANY DEVIATION FROM THIS DESIGN; ANY FAILURE TO BUILD THE TRUSS IN CONFORMANCE WITH TPI; OR FABRICATING, HANDLING, SHIPPING, INSTALLING & BRACING OF TRUSSES.
DESIGN CONFORMS WITH APPLICABLE PROVISIONS OF NDS (NATIONAL DESIGN SPEC, BY AF&PA) AND TPI. ITW BCG CONNECTOR PLATES ARE MADE OF 20/18/16GA (W,H/SS/K) ASTM A653 GRADE 40/60 (W, K/H,SS) GALV. STEEL. APPLY PLATES TO EACH FACE OF TRUSS AND, UNLESS OTHERWISE LOCATED ON THIS DESIGN, POSITION PER DRAWINGS 160A-Z. ANY INSPECTION OF PLATES FOLLOWED BY (I) SHALL BE PER ANNEX A3 OF TPI1-2002 SEC.3. A SEAL ON THIS DRAWING INDICATES ACCEPTANCE OF PROFESSIONAL ENGINEERING RESPONSIBILITY SOLELY FOR THE TRUSS COMPONENT DESIGN SHOWN. THE SUITABILITY AND USE OF THIS COMPONENT FOR ANY BUILDING IS THE RESPONSIBILITY OF THE BUILDING DESIGNER PER ANSI/TPI 1 SEC. 2.

DOUGLAS FLEMING LICENSE No. 66648 STATE OF FLORIDA PROFESSIONAL ENGINEER
DEC 18 '09

TC LL	20.0 PSF	REF	R8228- 60304
TC DL	10.0 PSF	DATE	12/18/09
BC DL	10.0 PSF	DRW	HCUSR8228 09352074
BC LL	0.0 PSF	HC-ENG	JB/DF
TOT.LD.	40.0 PSF	SEQN-	68135
DUR.FAC.	1.25	FROM	AH
SPACING	24.0"	JREF	1TXP0228701

(9-244--Fill in later EDGLEY -- , ** - H7B)

THIS DWG PREPARED FROM COMPUTER INPUT (LOADS & DIMENSIONS) SUBMITTED BY TRUSS MFR.

Top chord 2x6 SP #2 :T1 2x4 SP #2 Dense:
:T2 2x6 SP SS:
Bot chord 2x6 SP SS
Webs 2x4 SP #3 :W3, W11, W15 2x4 SP #2 Dense:
:W12, W17 2x6 SP #2:
:Lt Wedge 2x8 SP #1 Dense:

Brg blocks:0.131"x3" nails

brg	x-loc	#blocks	length/blk	#nails/blk	wall plate
1	0.000'	1	12"	4	Rigid Surface

Brg block to be same size and species as bottom chord.
Refer to drawing CNNAILSP0109 for more information.

(I) - plates so marked were sized using a Fabrication Tolerance of 0% and a Rotational Tolerance of 0 degrees.

110 mph wind, 15.00 ft mean hgt, ASCE 7-05, CLOSED bldg, not located within 4.50 ft from roof edge, CAT II, EXP C, wind TC DL=5.0 psf, wind BC DL=5.0 psf. Iw=1.00 GCpi(+/-)=0.18

Wind reactions based on MWFRS pressures.

(A) 1x4 #3SRB SPF-S or better "T" brace. 80% length of web member. Attach with 8d Box or Gun (0.113"x2.5",min.)nails @ 6" OC.

Deflection meets L/240 live and L/180 total load.

Special loads
------(Lumber Dur.Fac.=1.25 / Plate Dur.Fac.=1.25)

TC - From	62 plf at	-1.88 to	62 plf at	7.00	
TC - From	62 plf at	7.00 to	62 plf at	21.67	
TC - From	62 plf at	21.67 to	62 plf at	23.33	
TC - From	62 plf at	23.33 to	62 plf at	24.79	
TC - From	62 plf at	24.79 to	62 plf at	32.00	
BC - From	4 plf at	-1.88 to	4 plf at	0.00	
BC - From	20 plf at	0.00 to	20 plf at	32.00	
TC -	434 lb Conc. Load at	7.03			
TC -	184 lb Conc. Load at	9.06	, 11.06, 13.06		
TC -	-38 lb Conc. Load at	14.60			
BC -	487 lb Conc. Load at	7.03			
BC -	127 lb Conc. Load at	9.06	, 11.06, 13.06		
BC -	747 lb Conc. Load at	14.60			
BC -	1536 lb Conc. Load at	21.73			
BC -	505 lb Conc. Load at	23.73	, 25.73, 27.73, 29.73		

31.73

Right end vertical not exposed to wind pressure.

Roof overhang supports 2.00 psf soffit load.

In lieu of structural panels use purlins to brace all flat TC @ 24" OC.

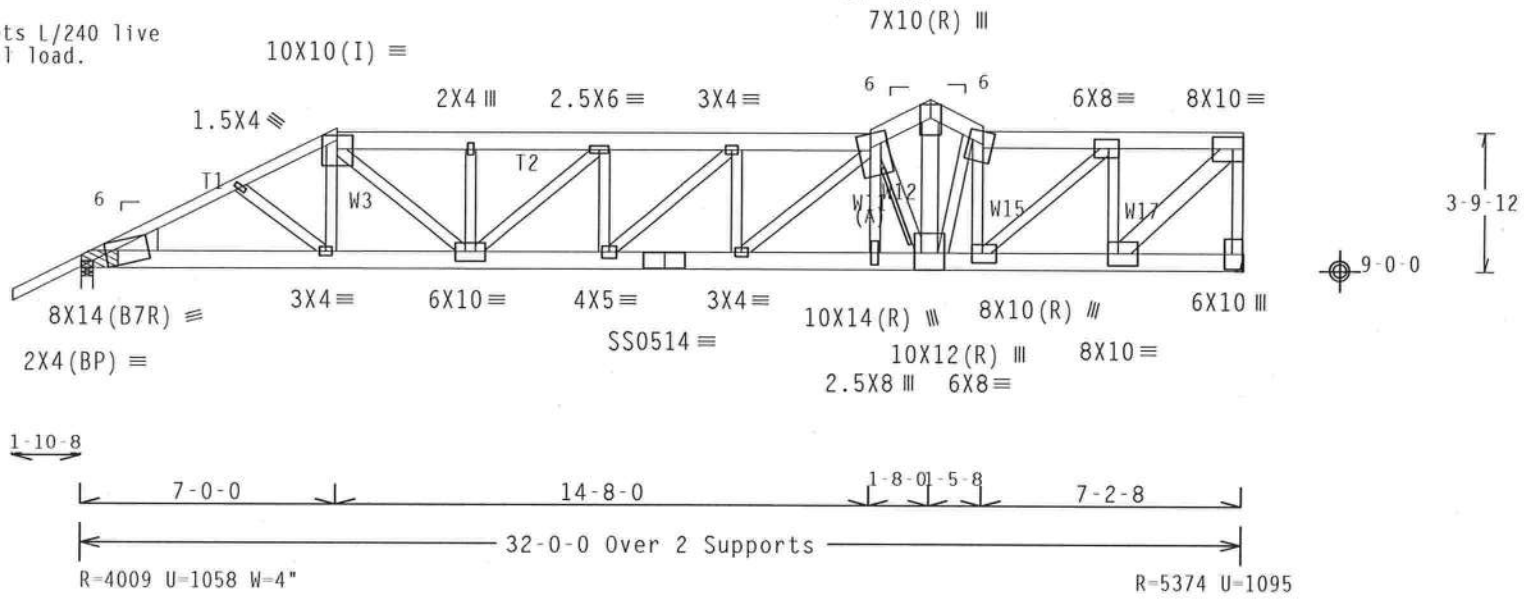

Design Crit: FBC2007Res/TPI-2002(STD)

PLT TYP. 18 Gauge HS,Wave FT/RT=20%(0%)/0(0) 9.02.00 [illegible] QTY:1 FL/-/4/-/-/R/- Scale =.1875"/Ft.

ALPINE
ITW Building Components Group Inc.
Haines City, FL 33844
FL COA #0 278

WARNING TRUSSES REQUIRE EXTREME CARE IN FABRICATION, HANDLING, SHIPPING, INSTALLING AND BRACING. REFER TO BCSI (BUILDING COMPONENT SAFETY INFORMATION), PUBLISHED BY TPI (TRUSS PLATE INSTITUTE, 218 NORTH LEE STREET, SUITE 312, ALEXANDRIA, VA, 22314) AND WTCA (WOOD TRUSS COUNCIL OF AMERICA, 6300 ENTERPRISE LANE, MADISON, WI 53719) FOR SAFETY PRACTICES PRIOR TO PERFORMING THESE FUNCTIONS. UNLESS OTHERWISE INDICATED TOP CHORD SHALL HAVE PROPERLY ATTACHED STRUCTURAL PANELS AND BOTTOM CHORD SHALL HAVE A PROPERLY ATTACHED RIGID CEILING.

IMPORTANTFURNISH A COPY OF THIS DESIGN TO THE INSTALLATION CONTRACTOR. ITW BCG, INC. SHALL NOT BE RESPONSIBLE FOR ANY DEVIATION FROM THIS DESIGN; ANY FAILURE TO BUILD THE TRUSS IN CONFORMANCE WITH TPI; OR FABRICATING, HANDLING, SHIPPING, INSTALLING & BRACING OF TRUSSES. DESIGN CONFORMS WITH APPLICABLE PROVISIONS OF NDS (NATIONAL DESIGN SPEC. BY AF&PA) AND TPI. ITW BCG CONNECTOR PLATES ARE MADE OF 20/18/16GA (W,H/SS/K) ASTM A653 GRADE 40/60 (W, K/H,SS) GALV. STEEL. APPLY PLATES TO EACH FACE OF TRUSS AND, UNLESS OTHERWISE LOCATED ON THIS DESIGN, POSITION PER DRAWINGS 160A-Z. ANY INSPECTION OF PLATES FOLLOWED BY (I) SHALL BE PER ANNEX A3 OF TPI1-2002 SEC.3. A SEAL ON THIS DRAWING INDICATES ACCEPTANCE OF PROFESSIONAL ENGINEERING RESPONSIBILITY SOLELY FOR THE TRUSS COMPONENT DESIGN SHOWN. THE SUITABILITY AND USE OF THIS COMPONENT FOR ANY BUILDING IS THE RESPONSIBILITY OF THE BUILDING DESIGNER PER ANSI/TPI 1 SEC. 2.

DOUGLAS FLEMING LICENSE No. 66648 STATE OF FLORIDA PROFESSIONAL ENGINEER

TC LL	20.0 PSF	REF	R8228- 60305
TC DL	10.0 PSF	DATE	12/18/09
BC DL	10.0 PSF	DRW	HCUSR8228 09352068
BC LL	0.0 PSF	HC-ENG	JB/DF
TOT.LD.	40.0 PSF	SEQN-	72845
DUR.FAC.	1.25	FROM	AH
SPACING	24.0"	JREF-	1TYP8228701

[illegible] 18 '09

(9-244--Fill in later EDGLEY -- , ** - H7B1)

THIS DWG PREPARED FROM COMPUTER INPUT (LOADS & DIMENSIONS) SUBMITTED BY TRUSS MFR.

Top chord 2x4 SP #2 Dense :T1 2x6 SP SS:
:T2 2x6 SP #1 Dense:
Bot chord 2x6 SP SS :B2 2x6 SP #2:
Webs 2x4 SP #3 :W2 2x6 SP #2:
:W6, W8, W11 2x4 SP #2 Dense:

Special loads
------(Lumber Dur.Fac.=1.25 / Plate Dur.Fac.=1.25)
TC - From 62 plf at 0.00 to 62 plf at 22.48
TC - From 62 plf at 22.48 to 62 plf at 23.33
TC - From 62 plf at 23.33 to 62 plf at 28.96
TC - From 62 plf at 28.96 to 62 plf at 32.00
BC - From 20 plf at 0.00 to 20 plf at 32.00
TC - 193 lb Conc. Load at 0.90 , 2.90, 4.90, 6.90
8.90, 10.90, 12.90
BC - 136 lb Conc. Load at 0.90 , 2.90, 4.90, 6.90
8.90, 10.90, 12.90
BC - 1206 lb Conc. Load at 14.54

Wind reactions based on MWFRS pressures.

Left end vertical not exposed to wind pressure.

(I) - plates so marked were sized using a Fabrication Tolerance of 0% and a Rotational Tolerance of 0 degrees.

110 mph wind, 15.00 ft mean hgt, ASCE 7-05, CLOSED bldg, not located within 4.50 ft from roof edge, CAT II, EXP C, wind TC DL=5.0 psf, wind BC DL=5.0 psf. Iw=1.00 GCpi(+/-)=0.18

Max JT VERT DEFL: LL: 0.32" DL: 0.33" recommended camber 5/8"

(A) Continuous lateral bracing equally spaced on member.

In lieu of structural panels use purlins to brace all flat TC @ 24" OC.

Deflection meets L/240 live and L/180 total load.

The TC of this truss shall be braced with attached spans at 24" OC in lieu of structural sheathing.

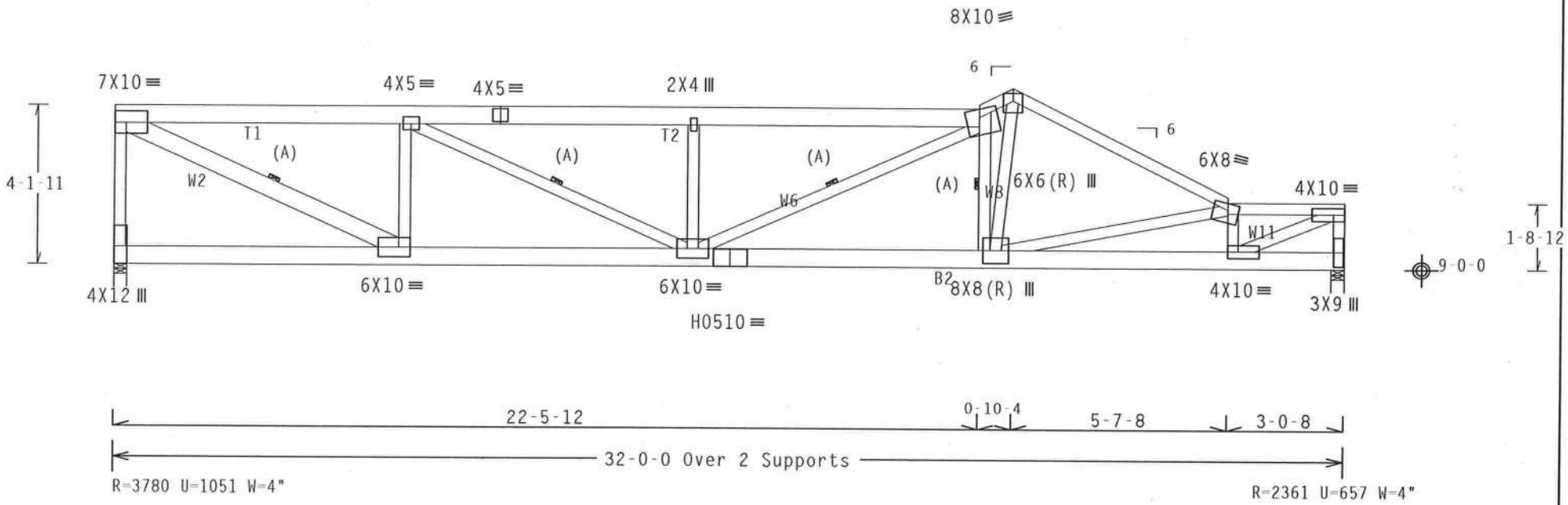

Design Crit: FBC2007Res/TPI-2002(STD)

PLT TYP. 20 Gauge HS,Wave FT/RT=20%(0%)/0(0) 9.02.00 QTY:1 FL/-/4/-/-/R/- Scale =.25"/Ft.

ALPINE
ITW Building Components Group Inc.
Haines City, FL 33844

WARNING TRUSSES REQUIRE EXTREME CARE IN FABRICATION, HANDLING, SHIPPING, INSTALLING AND BRACING. REFER TO BCSI (BUILDING COMPONENT SAFETY INFORMATION), PUBLISHED BY TPI (TRUSS PLATE INSTITUTE, 218 NORTH LEE STREET, SUITE 312, ALEXANDRIA, VA, 22314) AND WTCA (WOOD TRUSS COUNCIL OF AMERICA, 6300 ENTERPRISE LANE, MADISON, WI 53719) FOR SAFETY PRACTICES PRIOR TO PERFORMING THESE FUNCTIONS. UNLESS OTHERWISE INDICATED TOP CHORD SHALL HAVE PROPERLY ATTACHED STRUCTURAL PANELS AND BOTTOM CHORD SHALL HAVE A PROPERLY ATTACHED RIGID CEILING.

IMPORTANTFURNISH A COPY OF THIS DESIGN TO THE INSTALLATION CONTRACTOR. ITW BCG, INC. SHALL NOT BE RESPONSIBLE FOR ANY DEVIATION FROM THIS DESIGN; ANY FAILURE TO BUILD THE TRUSS IN CONFORMANCE WITH TPI; OR FABRICATING, HANDLING, SHIPPING, INSTALLING & BRACING OF TRUSSES.
DESIGN CONFORMS WITH APPLICABLE PROVISIONS OF NDS (NATIONAL DESIGN SPEC. BY AF&PA) AND TPI. ITW BCG CONNECTOR PLATES ARE MADE OF 20/18/16GA (W,H/SS/K) ASTM A653 GRADE 40/60 (W, K/H,SS) GALV. STEEL. APPLY PLATES TO EACH FACE OF TRUSS AND, UNLESS OTHERWISE LOCATED ON THIS DESIGN, POSITION PER DRAWINGS 160A-Z. ANY INSPECTION OF PLATES FOLLOWED BY (I) SHALL BE PER ANNEX A3 OF TPI1-2002 SEC.3. A SEAL ON THIS DRAWING INDICATES ACCEPTANCE OF PROFESSIONAL ENGINEERING RESPONSIBILITY SOLELY FOR THE TRUSS COMPONENT DESIGN SHOWN. THE SUITABILITY AND USE OF THIS COMPONENT FOR ANY BUILDING IS THE RESPONSIBILITY OF THE BUILDING DESIGNER PER ANSI/TPI 1 SEC. 2.

DOUGLAS FLEMING LICENSE No. 66648 STATE OF FLORIDA PROFESSIONAL ENGINEER

18 '09

TC LL	20.0 PSF	REF R8228- 60306
TC DL	10.0 PSF	DATE 12/18/09
BC DL	10.0 PSF	DRW HCUSR8228 09352063
BC LL	0.0 PSF	HC-ENG JB/DF
TOT.LD.	40.0 PSF	SEQN- 73020
DUR.FAC.	1.25	FROM AH

(9-244--Fill in later EDGLEY -- , ** - H9B1)

Top chord 2x4 SP #2 Dense
Bot chord 2x4 SP #2 Dense
Webs 2x4 SP #3

Left end vertical not exposed to wind pressure.

Roof overhang supports 2.00 psf soffit load.

In lieu of structural panels use purlins to brace all flat TC @ 24" OC.

MWFRS loads based on trusses located at least 7.50 ft. from roof edge.

110 mph wind, 15.00 ft mean hgt, ASCE 7-05, CLOSED bldg, not located within 4.50 ft from roof edge, CAT II, EXP C, wind TC DL=5.0 psf, wind BC DL=5.0 psf. Iw=1.00 GCpi(+/-)=0.18

Wind reactions based on MWFRS pressures.

(A) Continuous lateral bracing equally spaced on member.

Bottom chord checked for 10.00 psf non-concurrent live load.

Deflection meets L/240 live and L/180 total load.

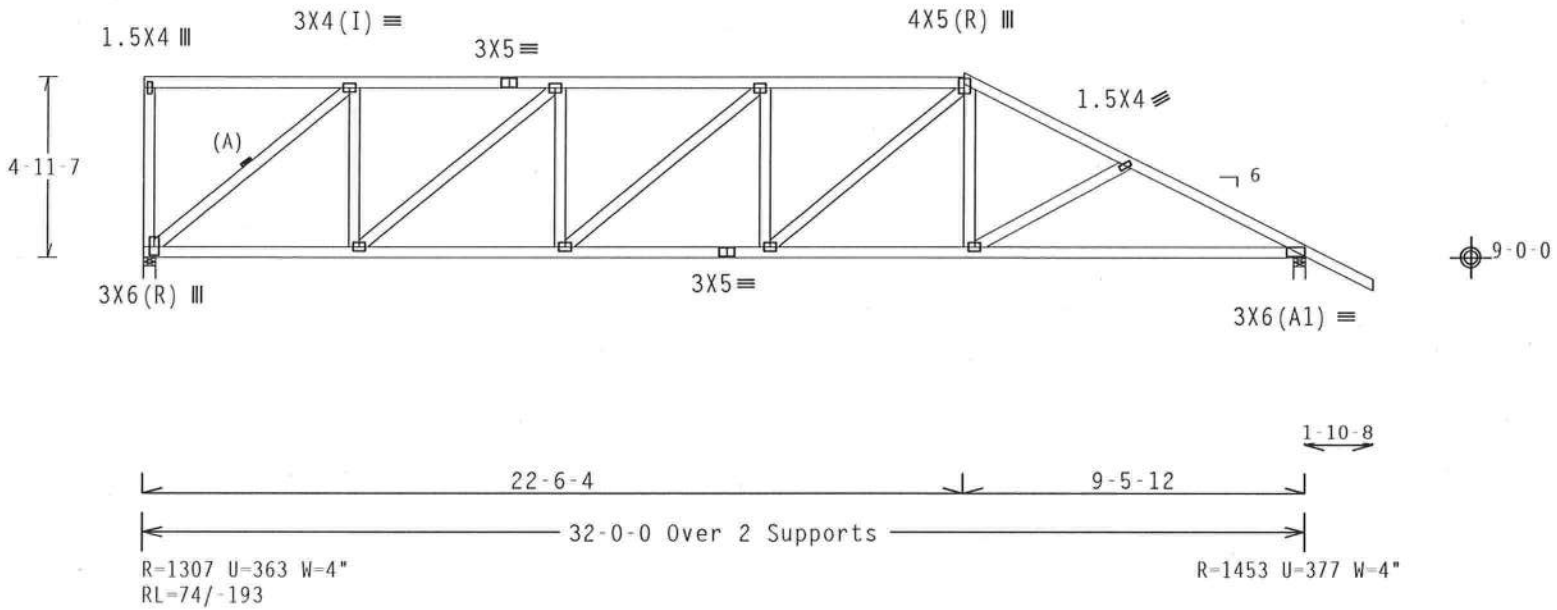

Note: All Plates Are 3X4 Except As Shown.

Design Crit: FBC2007Res/TPI-2002(STD)

PLT TYP. Wave FT/RT=20%(0%)/0(0) 9.02.00 QTY:1 FL/-/4/-/-/R/- Scale =.1875"/Ft.

ALPINE
ITW Building Components Group Inc.
Haines City, FL 33844

WARNING TRUSSES REQUIRE EXTREME CARE IN FABRICATION, HANDLING, SHIPPING, INSTALLING AND BRACING. REFER TO BCSI (BUILDING COMPONENT SAFETY INFORMATION), PUBLISHED BY TPI (TRUSS PLATE INSTITUTE, 218 NORTH LEE STREET, SUITE 312, ALEXANDRIA, VA, 22314) AND WTCA (WOOD TRUSS COUNCIL OF AMERICA, 6300 ENTERPRISE LANE, MADISON, WI 53719) FOR SAFETY PRACTICES PRIOR TO PERFORMING THESE FUNCTIONS. UNLESS OTHERWISE INDICATED TOP CHORD SHALL HAVE PROPERLY ATTACHED STRUCTURAL PANELS AND BOTTOM CHORD SHALL HAVE A PROPERLY ATTACHED RIGID CEILING.

IMPORTANTFURNISH A COPY OF THIS DESIGN TO THE INSTALLATION CONTRACTOR. ITW BCG, INC. SHALL NOT BE RESPONSIBLE FOR ANY DEVIATION FROM THIS DESIGN; ANY FAILURE TO BUILD THE TRUSS IN CONFORMANCE WITH TPI; OR FABRICATING, HANDLING, SHIPPING, INSTALLING & BRACING OF TRUSSES. DESIGN CONFORMS WITH APPLICABLE PROVISIONS OF NDS (NATIONAL DESIGN SPEC. BY AF&PA) AND TPI. ITW BCG CONNECTOR PLATES ARE MADE OF 20/18/16GA (W,H/SS/K) ASTM A653 GRADE 40/60 (W, K/H,SS) GALV. STEEL. APPLY PLATES TO EACH FACE OF TRUSS AND, UNLESS OTHERWISE LOCATED ON THIS DESIGN, POSITION PER DRAWINGS 160A-Z. ANY INSPECTION OF PLATES FOLLOWED BY (I) SHALL BE PER ANNEX A3 OF TPI1-2002 SEC.3. A SEAL ON THIS DRAWING INDICATES ACCEPTANCE OF PROFESSIONAL ENGINEERING RESPONSIBILITY SOLELY FOR THE TRUSS COMPONENT DESIGN SHOWN. THE SUITABILITY AND USE OF THIS COMPONENT FOR ANY BUILDING IS THE RESPONSIBILITY OF THE BUILDING DESIGNER PER ANSI/TPI 1 SEC. 2.

DOUGLAS FLEMING LICENSE No. 66648 STATE OF FLORIDA PROFESSIONAL ENGINEER
DEC 18 '09

TC LL	20.0 PSF	REF	R8228- 60307
TC DL	10.0 PSF	DATE	12/18/09
BC DL	10.0 PSF	DRW	HCUSR8228 09352012
BC LL	0.0 PSF	HC-ENG	JB/DF *
TOT.LD.	40.0 PSF	SEQN-	73015
DUR.FAC.	1.25	FROM	AH
SPACING	24.0"	JOB#	1TXD0000701

(9-244--Fill in later EDGLEY -- , ** - H11B1)

THIS DWG PREPARED FROM COMPUTER INPUT (LOADS & DIMENSIONS) SUBMITTED BY TRUSS MFR.

Top chord 2x4 SP #2 Dense
Bot chord 2x4 SP #2 Dense
Webs 2x4 SP #3

Left end vertical not exposed to wind pressure.

Roof overhang supports 2.00 psf soffit load.

In lieu of structural panels use purlins to brace all flat TC @ 24" OC.

Bottom chord checked for 10.00 psf non-concurrent live load.

MWFRS loads based on trusses located at least 15.00 ft. from roof edge.

110 mph wind, 15.00 ft mean hgt, ASCE 7-05, CLOSED bldg, not located within 4.50 ft from roof edge, CAT II, EXP C, wind TC DL=5.0 psf, wind BC DL=5.0 psf. Iw=1.00 GCpi(+/-)=0.18

Wind reactions based on MWFRS pressures.

(A) Continuous lateral bracing equally spaced on member.

Truss passed check for 20 psf additional bottom chord live load in areas with 42"-high x 24"-wide clearance.

Deflection meets L/240 live and L/180 total load.

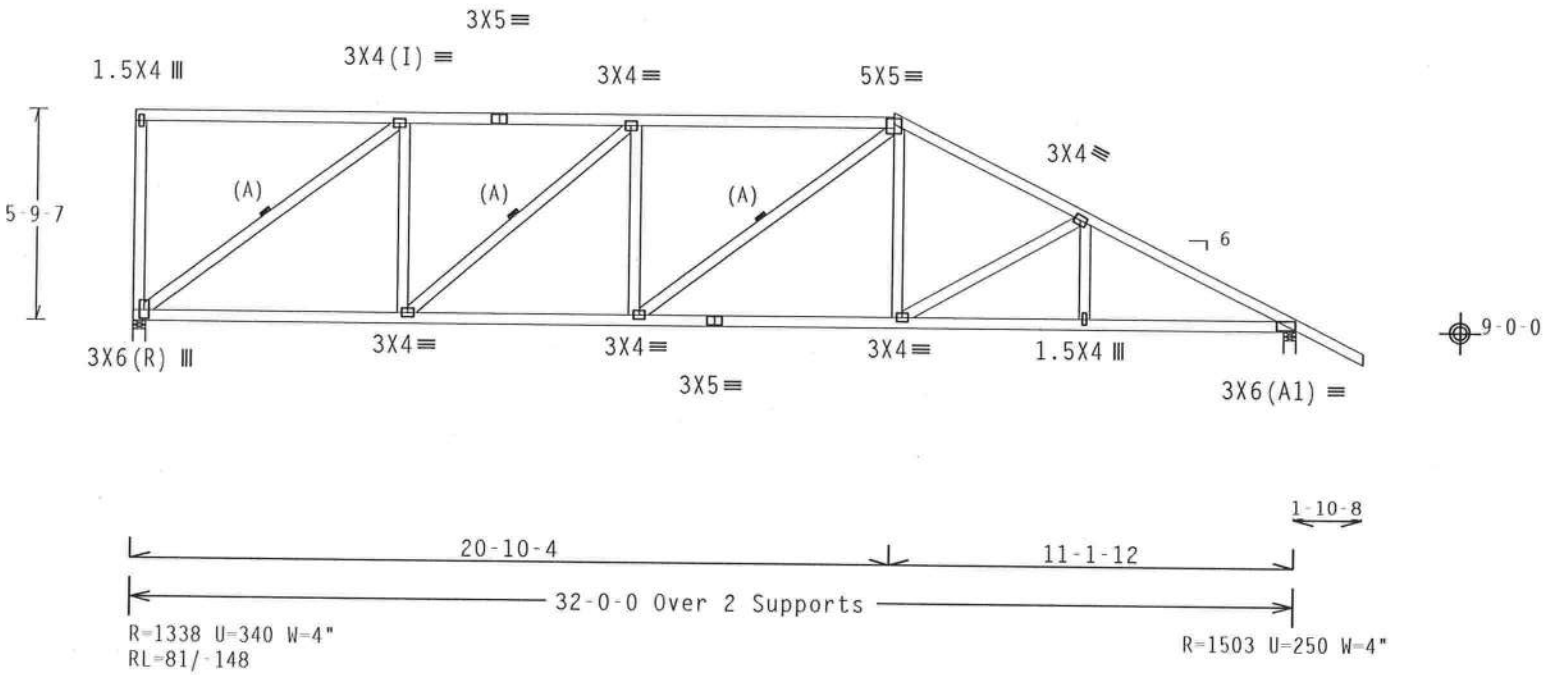

Design Crit: FBC2007Res/TPI-2002(STD)
FT/RT=20%(0%)/0(0)

PLT TYP. Wave

9.02.00 [illegible] QTY:1

FL/-/4/-/-/R/-

Scale =.1875"/Ft.

WARNING TRUSSES REQUIRE EXTREME CARE IN FABRICATION, HANDLING, SHIPPING, INSTALLING AND BRACING. REFER TO BCSI (BUILDING COMPONENT SAFETY INFORMATION), PUBLISHED BY TPI (TRUSS PLATE INSTITUTE, 218 NORTH LEE STREET, SUITE 312, ALEXANDRIA, VA. 22314) AND WTCA (WOOD TRUSS COUNCIL OF AMERICA, 6300 ENTERPRISE LANE, MADISON, WI 53719) FOR SAFETY PRACTICES PRIOR TO PERFORMING THESE FUNCTIONS. UNLESS OTHERWISE INDICATED TOP CHORD SHALL HAVE PROPERLY ATTACHED STRUCTURAL PANELS AND BOTTOM CHORD SHALL HAVE A PROPERLY ATTACHED RIGID CEILING.

IMPORTANTFURNISH A COPY OF THIS DESIGN TO THE INSTALLATION CONTRACTOR. ITW BCG, INC. SHALL NOT BE RESPONSIBLE FOR ANY DEVIATION FROM THIS DESIGN; ANY FAILURE TO BUILD THE TRUSS IN COMFORMANCE WITH TPI; OR FABRICATING, HANDLING, SHIPPING, INSTALLING & BRACING OF TRUSSES.
DESIGN CONFORMS WITH APPLICABLE PROVISIONS OF NDS (NATIONAL DESIGN SPEC. BY AF&PA) AND TPI. ITW BCG CONNECTOR PLATES ARE MADE OF 20/18/16GA (W,H/SS/K) ASTM A653 GRADE 40/60 (W, K/H,SS) GALV. STEEL. APPLY PLATES TO EACH FACE OF TRUSS AND, UNLESS OTHERWISE LOCATED ON THIS DESIGN, POSITION PER DRAWINGS 160A-Z. ANY INSPECTION OF PLATES FOLLOWED BY (1) SHALL BE PER ANNEX A3 OF TPI1-2002 SEC.3. A SEAL ON THIS DRAWING INDICATES ACCEPTANCE OF PROFESSIONAL ENGINEERING RESPONSIBILITY SOLELY FOR THE TRUSS COMPONENT DESIGN SHOWN. THE SUITABILITY AND USE OF THIS COMPONENT FOR ANY BUILDING IS THE RESPONSIBILITY OF THE BUILDING DESIGNER PER ANSI/TPI 1 SEC. 2.

ALPINE
ITW Building Components Group Inc.
Haines City, FL 33844
FL COA #0-279

DOUGLAS FLEMING LICENSE No.66648 STATE OF FLORIDA PROFESSIONAL ENGINEER

[illegible]EC 18 '09

TC LL	20.0 PSF	REF	R8228- 60308
TC DL	10.0 PSF	DATE	12/18/09
BC DL	10.0 PSF	DRW	HCUSR8228 09352013
BC LL	0.0 PSF	HC-ENG	JB/DF *
TOT.LD.	40.0 PSF	SEQN-	73010
DUR.FAC.	1.25	FROM	AH

(9-244--Fill in later EDGLEY -- , ** - H13B1)

THIS DWG PREPARED FROM COMPUTER INPUT (LOADS & DIMENSIONS) SUBMITTED BY TRUSS MFR.

Top chord 2x4 SP #2 Dense
Bot chord 2x4 SP #2 Dense
Webs 2x4 SP #3

Left end vertical not exposed to wind pressure.

Roof overhang supports 2.00 psf soffit load.

In lieu of structural panels use purlins to brace all flat TC @ 24" OC.

Bottom chord checked for 10.00 psf non-concurrent live load.

MWFRS loads based on trusses located at least 15.00 ft. from roof edge.

110 mph wind, 15.00 ft mean hgt, ASCE 7-05, CLOSED bldg, not located within 4.50 ft from roof edge, CAT II, EXP C, wind TC DL=5.0 psf, wind BC DL=5.0 psf. Iw=1.00 GCpi(+/-)=0.18

Wind reactions based on MWFRS pressures.

(A) Continuous lateral bracing equally spaced on member.

Truss passed check for 20 psf additional bottom chord live load in areas with 42"-high x 24"-wide clearance.

Deflection meets L/240 live and L/180 total load.

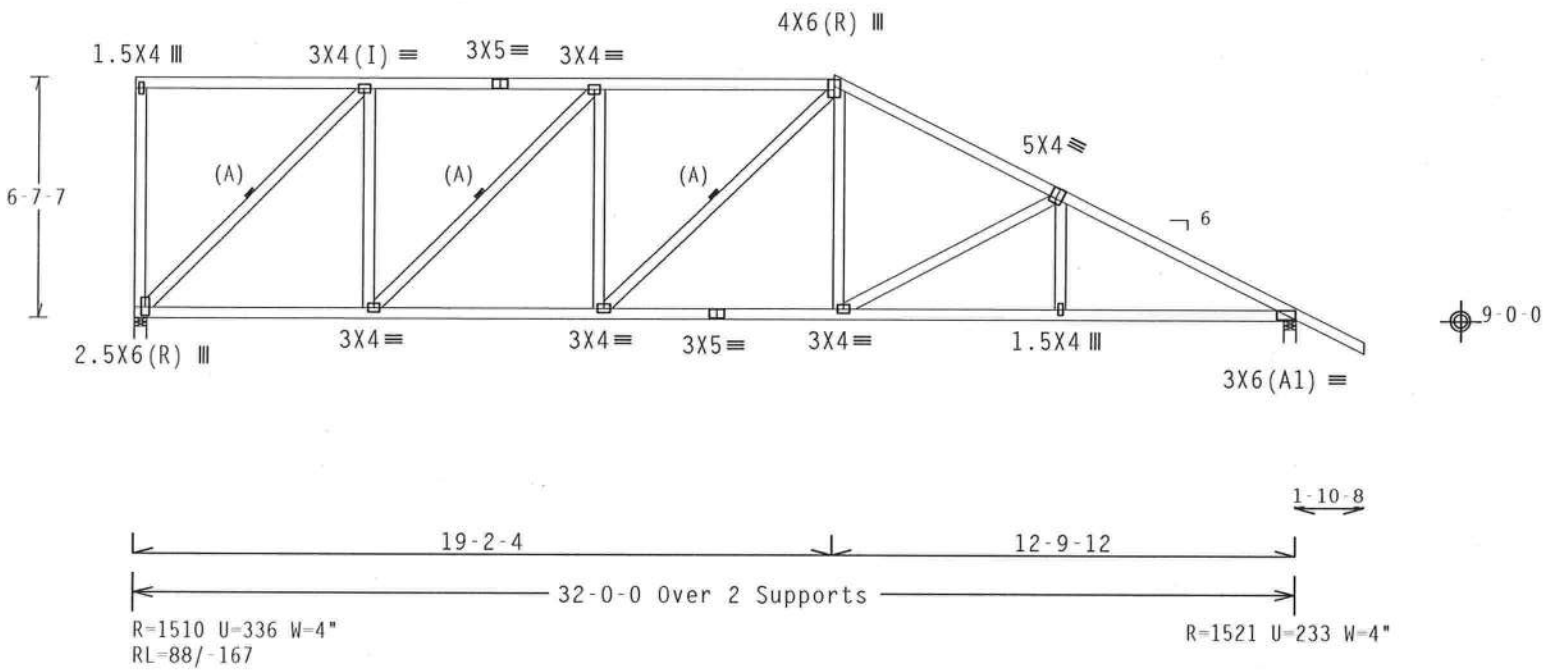

Design Crit: FBC2007Res/TPI-2002(STD)

PLT TYP. Wave | FT/RT=20%(0%)/0(0) | 9.02.00 [illegible] | QTY:1 | FL/-/4/-/-/R/- | Scale =.1875"/Ft.

ALPINE
ITW Building Components Group Inc.
Haines City, FL 33844
FL COA #0 278

WARNING TRUSSES REQUIRE EXTREME CARE IN FABRICATION, HANDLING, SHIPPING, INSTALLING AND BRACING. REFER TO BCSI (BUILDING COMPONENT SAFETY INFORMATION), PUBLISHED BY TPI (TRUSS PLATE INSTITUTE, 218 NORTH LEE STREET, SUITE 312, ALEXANDRIA, VA, 22314) AND WICA (WOOD TRUSS COUNCIL OF AMERICA, 6300 ENTERPRISE LANE, MADISON, WI 53719) FOR SAFETY PRACTICES PRIOR TO PERFORMING THESE FUNCTIONS. UNLESS OTHERWISE INDICATED TOP CHORD SHALL HAVE PROPERLY ATTACHED STRUCTURAL PANELS AND BOTTOM CHORD SHALL HAVE A PROPERLY ATTACHED RIGID CEILING.

IMPORTANTFURNISH A COPY OF THIS DESIGN TO THE INSTALLATION CONTRACTOR. ITW BCG, INC. SHALL NOT BE RESPONSIBLE FOR ANY DEVIATION FROM THIS DESIGN; ANY FAILURE TO BUILD THE TRUSS IN CONFORMANCE WITH TPI; OR FABRICATING, HANDLING, SHIPPING, INSTALLING & BRACING OF TRUSSES. DESIGN CONFORMS WITH APPLICABLE PROVISIONS OF NDS (NATIONAL DESIGN SPEC. BY AF&PA) AND TPI. ITW BCG CONNECTOR PLATES ARE MADE OF 20/18/16GA (W,H/SS/K) ASTM A653 GRADE 40/60 (W, K/H,SS) GALV. STEEL. APPLY PLATES TO EACH FACE OF TRUSS AND, UNLESS OTHERWISE LOCATED ON THIS DESIGN, POSITION PER DRAWINGS 160A-Z. ANY INSPECTION OF PLATES FOLLOWED BY (I) SHALL BE PER ANNEX A3 OF TPI1-2002 SEC.3. A SEAL ON THIS DRAWING INDICATES ACCEPTANCE OF PROFESSIONAL ENGINEERING RESPONSIBILITY SOLELY FOR THE TRUSS COMPONENT DESIGN SHOWN. THE SUITABILITY AND USE OF THIS COMPONENT FOR ANY BUILDING IS THE RESPONSIBILITY OF THE BUILDING DESIGNER PER ANSI/TPI 1 SEC. 2.

DOUGLAS FLEMING LICENSE No. 66648 STATE OF FLORIDA PROFESSIONAL ENGINEER

[illegible] 18 '09

TC LL	20.0 PSF	REF	R8228- 60309
TC DL	10.0 PSF	DATE	12/18/09
BC DL	10.0 PSF	DRW	HCUSR8228 09352014
BC LL	0.0 PSF	HC-ENG	JB/DF *
TOT.LD.	40.0 PSF	SEQN-	73001
DUR.FAC.	1.25	FROM	AH
SPACING	24.0"	JREF-	1TYP8228701

(9-244--Fill in later EDGLEY -- , ** - H15B1)

THIS DWG PREPARED FROM COMPUTER INPUT (LOADS & DIMENSIONS) SUBMITTED BY TRUSS MFR.

Top chord 2x4 SP #2 Dense
Bot chord 2x4 SP #2 Dense
Webs 2x4 SP #3

Left end vertical not exposed to wind pressure.

Roof overhang supports 2.00 psf soffit load.

In lieu of structural panels use purlins to brace all flat TC @ 24" OC.

Bottom chord checked for 10.00 psf non-concurrent live load.

MWFRS loads based on trusses located at least 15.00 ft. from roof edge.

110 mph wind, 15.00 ft mean hgt, ASCE 7-05, CLOSED bldg, not located within 4.50 ft from roof edge, CAT II, EXP C, wind TC DL=5.0 psf, wind BC DL=5.0 psf. Iw=1.00 GCpi(+/-)=0.18

Wind reactions based on MWFRS pressures.

(A) Continuous lateral bracing equally spaced on member.

Truss passed check for 20 psf additional bottom chord live load in areas with 42"-high x 24"-wide clearance.

Deflection meets L/240 live and L/180 total load.

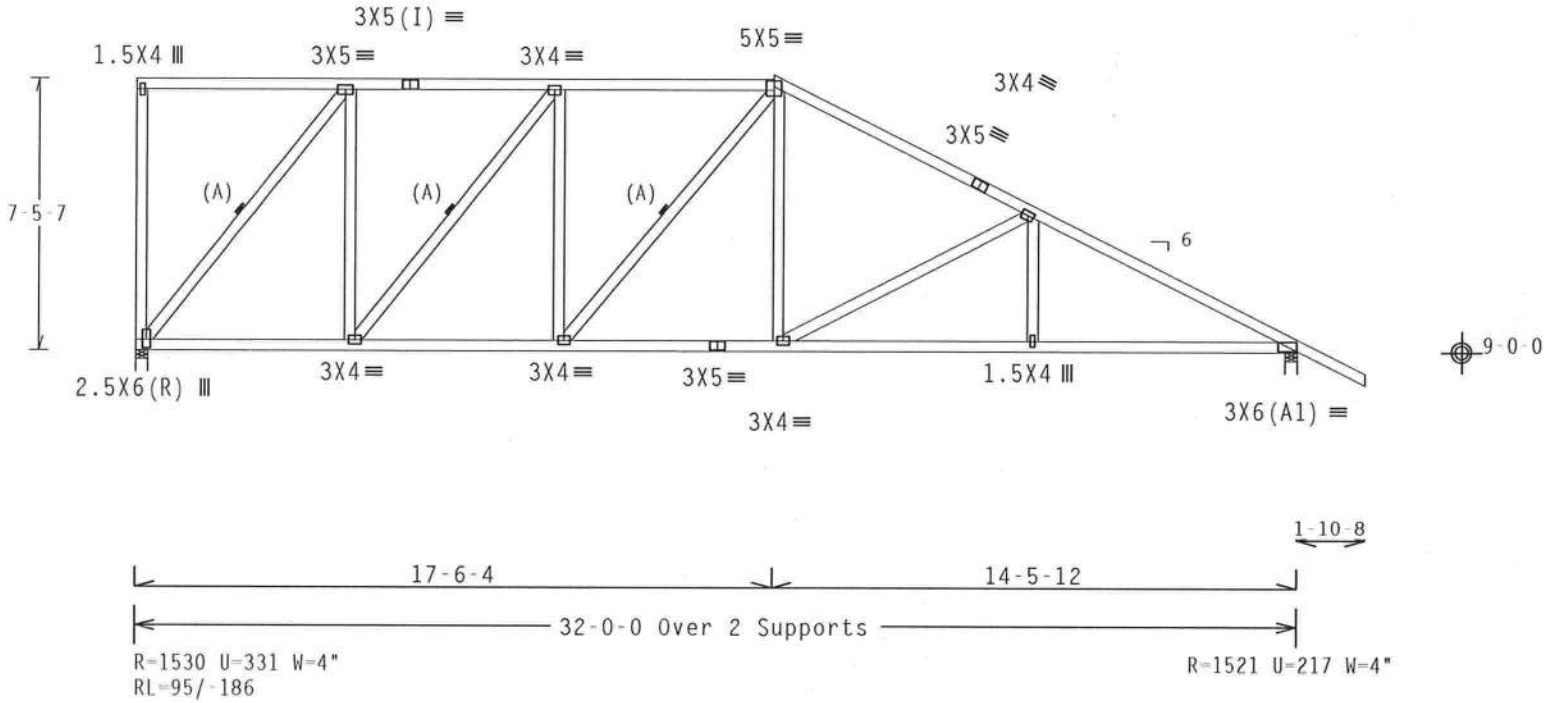

Design Crit: FBC2007Res/TPI-2002(STD)

PLT TYP. Wave | FT/RT=20%(0%)/0(0) | 9.02.00 | QTY:1 | FL/-/4/-/-/R/- | Scale =.1875"/Ft.

ALPINE
ITW Building Components Group Inc.
Haines City, FL 33844

WARNING TRUSSES REQUIRE EXTREME CARE IN FABRICATION, HANDLING, SHIPPING, INSTALLING AND BRACING. REFER TO BCSI (BUILDING COMPONENT SAFETY INFORMATION), PUBLISHED BY TPI (TRUSS PLATE INSTITUTE, 218 NORTH LEE STREET, SUITE 312, ALEXANDRIA, VA. 22314) AND WICA (WOOD TRUSS COUNCIL OF AMERICA, 6300 ENTERPRISE LANE, MADISON, WI 53719) FOR SAFETY PRACTICES PRIOR TO PERFORMING THESE FUNCTIONS. UNLESS OTHERWISE INDICATED TOP CHORD SHALL HAVE PROPERLY ATTACHED STRUCTURAL PANELS AND BOTTOM CHORD SHALL HAVE A PROPERLY ATTACHED RIGID CEILING.

IMPORTANTFURNISH A COPY OF THIS DESIGN TO THE INSTALLATION CONTRACTOR. ITW BCG, INC. SHALL NOT BE RESPONSIBLE FOR ANY DEVIATION FROM THIS DESIGN; ANY FAILURE TO BUILD THE TRUSS IN COMFORMANCE WITH TPI; OR FABRICATING, HANDLING, SHIPPING, INSTALLING & BRACING OF TRUSSES.
DESIGN CONFORMS WITH APPLICABLE PROVISIONS OF NDS (NATIONAL DESIGN SPEC, BY AF&PA) AND TPI. ITW BCG CONNECTOR PLATES ARE MADE OF 20/18/16GA (W,H/SS/K) ASTM A653 GRADE 40/60 (W, K/H,SS) GALV. STEEL. APPLY PLATES TO EACH FACE OF TRUSS AND, UNLESS OTHERWISE LOCATED ON THIS DESIGN, POSITION PER DRAWINGS 160A-Z. ANY INSPECTION OF PLATES FOLLOWED BY (1) SHALL BE PER ANNEX A3 OF TPI1-2002 SEC.3. A SEAL ON THIS DRAWING INDICATES ACCEPTANCE OF PROFESSIONAL ENGINEERING RESPONSIBILITY SOLELY FOR THE TRUSS COMPONENT DESIGN SHOWN. THE SUITABILITY AND USE OF THIS COMPONENT FOR ANY BUILDING IS THE RESPONSIBILITY OF THE BUILDING DESIGNER PER ANSI/TPI 1 SEC. 2.

DOUGLAS FLEMING LICENSE No. 66648 STATE OF FLORIDA PROFESSIONAL ENGINEER

DEC 18 '09

TC LL	20.0 PSF	REF R8228- 60310
TC DL	10.0 PSF	DATE 12/18/09
BC DL	10.0 PSF	DRW HCUSR8228 09352022
BC LL	0.0 PSF	HC-ENG JB/DF
TOT.LD.	40.0 PSF	SEQN- 73005
DUR.FAC.	1.25	FROM AH
SPACING	24.0"	JREF 1TYP8228701

Top chord 2x4 SP #2 Dense
Bot chord 2x4 SP #2 Dense
Webs 2x4 SP #3

Left end vertical not exposed to wind pressure.

Roof overhang supports 2.00 psf soffit load.

(A) Continuous lateral bracing equally spaced on member.

In lieu of structural panels use purlins to brace all flat TC @ 24" OC.

Bottom chord checked for 10.00 psf non-concurrent live load.

MWFRS loads based on trusses located at least 15.00 ft. from roof edge.

110 mph wind, 15.00 ft mean hgt, ASCE 7-05, CLOSED bldg, not located within 4.50 ft from roof edge, CAT II, EXP C, wind TC DL=5.0 psf, wind BC DL=5.0 psf. Iw=1.00 GCpi(+/-)=0.18

Wind reactions based on MWFRS pressures.

H = recommended connection based on manufacturer tested capacities and calculations. Conditions may exist that require different connections than indicated. Refer to manufacturer publication for additional information.

Truss passed check for 20 psf additional bottom chord live load in areas with 42"-high x 24"-wide clearance.

Deflection meets L/240 live and L/180 total load.

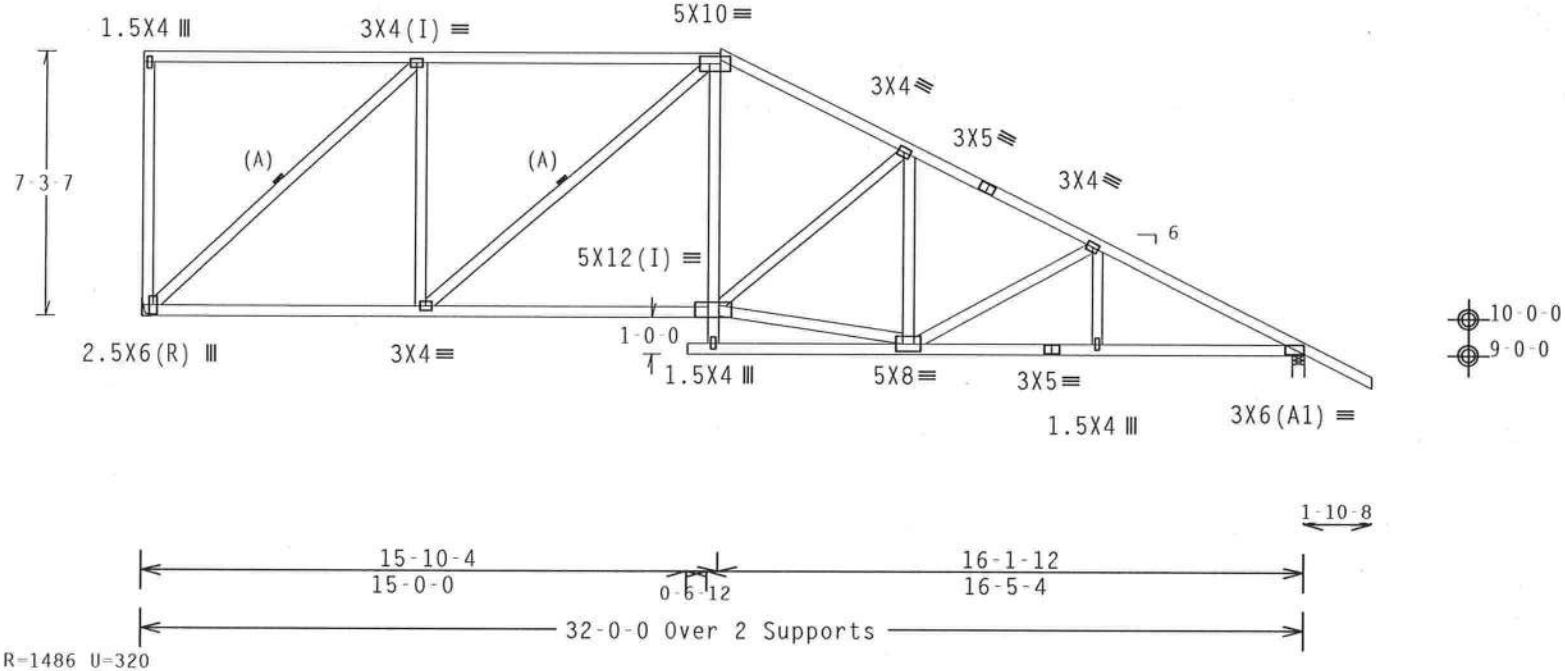

R=1486 U=320
RL=101/-205 H=Simpson HUS26
w/ (4) 10d Common, 0.148"x3.0" nails in Truss
w/ (14) 10d Common, 0.148"x3.0" nails in Girder
Girder is (2)2X6 min. So.Pine

R=1535 U=208 W=4"

Design Crit: FBC2007Res/TPI-2002(STD)

PLT TYP. Wave FT/RT=20%(0%)/0(0) 9.02.00 QTY:1 FL/-/4/-/-/R/- Scale =.1875"/Ft.

ALPINE
ITW Building Components Group Inc.
Haines City, FL 33844
FL COA #0 278

WARNING TRUSSES REQUIRE EXTREME CARE IN FABRICATION, HANDLING, SHIPPING, INSTALLING AND BRACING. REFER TO BCSI (BUILDING COMPONENT SAFETY INFORMATION), PUBLISHED BY TPI (TRUSS PLATE INSTITUTE, 218 NORTH LEE STREET, SUITE 312, ALEXANDRIA, VA, 22314) AND WTCA (WOOD TRUSS COUNCIL OF AMERICA, 6300 ENTERPRISE LANE, MADISON, WI 53719) FOR SAFETY PRACTICES PRIOR TO PERFORMING THESE FUNCTIONS. UNLESS OTHERWISE INDICATED TOP CHORD SHALL HAVE PROPERLY ATTACHED STRUCTURAL PANELS AND BOTTOM CHORD SHALL HAVE A PROPERLY ATTACHED RIGID CEILING.

IMPORTANTFURNISH A COPY OF THIS DESIGN TO THE INSTALLATION CONTRACTOR. ITW BCG, INC. SHALL NOT BE RESPONSIBLE FOR ANY DEVIATION FROM THIS DESIGN; ANY FAILURE TO BUILD THE TRUSS IN CONFORMANCE WITH TPI; OR FABRICATING, HANDLING, SHIPPING, INSTALLING & BRACING OF TRUSSES. DESIGN CONFORMS WITH APPLICABLE PROVISIONS OF NDS (NATIONAL DESIGN SPEC. BY AF&PA) AND TPI. ITW BCG CONNECTOR PLATES ARE MADE OF 20/18/16GA (W,H/SS/K) ASTM A653 GRADE 40/60 (W, K/H,SS) GALV. STEEL. APPLY PLATES TO EACH FACE OF TRUSS AND, UNLESS OTHERWISE LOCATED ON THIS DESIGN, POSITION PER DRAWINGS 160A-2. ANY INSPECTION OF PLATES FOLLOWED BY (1) SHALL BE PER ANNEX A3 OF TPI1-2002 SEC.3. A SEAL ON THIS DRAWING INDICATES ACCEPTANCE OF PROFESSIONAL ENGINEERING RESPONSIBILITY SOLELY FOR THE TRUSS COMPONENT DESIGN SHOWN. THE SUITABILITY AND USE OF THIS COMPONENT FOR ANY BUILDING IS THE RESPONSIBILITY OF THE BUILDING DESIGNER PER ANSI/TPI 1 SEC. 2.

DOUGLAS FLEMING LICENSE No. 66648 STATE OF FLORIDA PROFESSIONAL ENGINEER

18 '09

TC LL	20.0 PSF	REF R8228- 60311
TC DL	10.0 PSF	DATE 12/18/09
BC DL	10.0 PSF	DRW HCUSR8228 09352023
BC LL	0.0 PSF	HC-ENG JB/DF
TOT.LD.	40.0 PSF	SEQN- 72992
DUR.FAC.	1.25	FROM AH
SPACING	24.0"	JREF- 1TXP8228701

(9-244--Fill in later EDGLEY -- , ** - B9)

Top chord 2x4 SP #2 Dense
Bot chord 2x4 SP #2 Dense
Webs 2x4 SP #3

Left end vertical not exposed to wind pressure.

Roof overhang supports 2.00 psf soffit load.

(A) Continuous lateral bracing equally spaced on member.

In lieu of structural panels use purlins to brace all flat TC @ 24" OC.

Bottom chord checked for 10.00 psf non-concurrent live load.

MWFRS loads based on trusses located at least 15.00 ft. from roof edge.

110 mph wind, 15.00 ft mean hgt, ASCE 7-05, CLOSED bldg, not located within 4.50 ft from roof edge, CAT II, EXP C, wind TC DL=5.0 psf, wind BC DL=5.0 psf. Iw=1.00 GCpi(+/-)=0.18

Wind reactions based on MWFRS pressures.

H = recommended connection based on manufacturer tested capacities and calculations. Conditions may exist that require different connections than indicated. Refer to manufacturer publication for additional information.

Truss passed check for 20 psf additional bottom chord live load in areas with 42"-high x 24"-wide clearance.

Deflection meets L/240 live and L/180 total load.

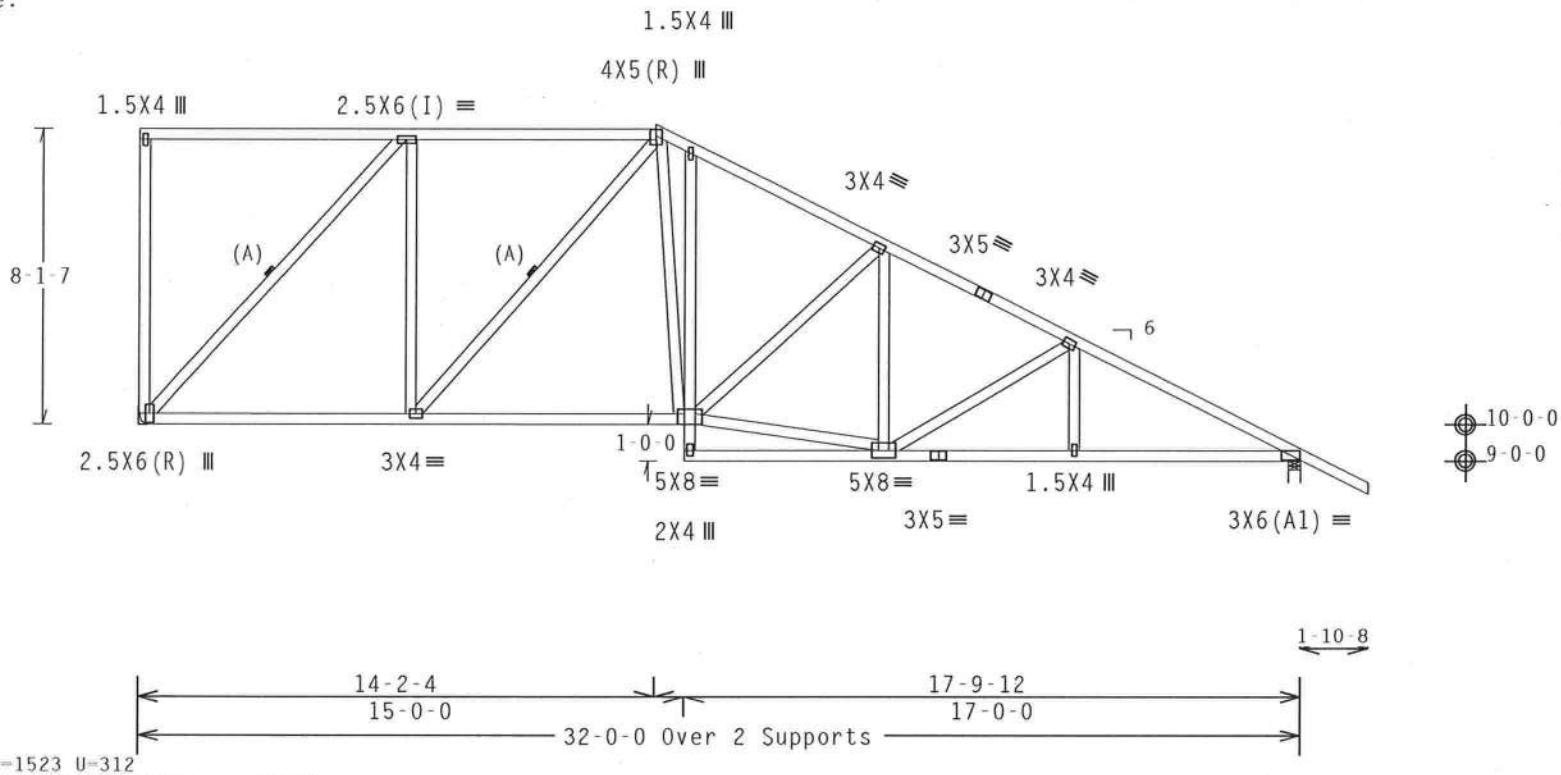

R=1523 U=312
RL=108/-224 H=Simpson HUS26
w/ (4) 10d Common, 0.148"x3.0" nails in Truss
w/ (14) 10d Common, 0.148"x3.0" nails in Girder
Girder is (2)2X6 min. So.Pine

R=1522 U=193 W=4"

Design Crit: FBC2007Res/TPI-2002(STD)

PLT TYP. Wave | FT/RT=20%(0%)/0(0) | 9.02.00 | QTY:1 | FL/-/4/-/-/R/- | Scale =.1875"/Ft.

ALPINE
ITW Building Components Group Inc.
Haines City, FL 33844
FL COA #0 278

WARNING TRUSSES REQUIRE EXTREME CARE IN FABRICATION, HANDLING, SHIPPING, INSTALLING AND BRACING. REFER TO BCSI (BUILDING COMPONENT SAFETY INFORMATION), PUBLISHED BY TPI (TRUSS PLATE INSTITUTE, 218 NORTH LEE STREET, SUITE 312, ALEXANDRIA, VA, 22314) AND WTCA (WOOD TRUSS COUNCIL OF AMERICA, 6300 ENTERPRISE LANE, MADISON, WI 53719) FOR SAFETY PRACTICES PRIOR TO PERFORMING THESE FUNCTIONS. UNLESS OTHERWISE INDICATED TOP CHORD SHALL HAVE PROPERLY ATTACHED STRUCTURAL PANELS AND BOTTOM CHORD SHALL HAVE A PROPERLY ATTACHED RIGID CEILING.

IMPORTANTFURNISH A COPY OF THIS DESIGN TO THE INSTALLATION CONTRACTOR. ITW BCG, INC. SHALL NOT BE RESPONSIBLE FOR ANY DEVIATION FROM THIS DESIGN; ANY FAILURE TO BUILD THE TRUSS IN CONFORMANCE WITH TPI; OR FABRICATING, HANDLING, SHIPPING, INSTALLING & BRACING OF TRUSSES. DESIGN CONFORMS WITH APPLICABLE PROVISIONS OF NDS (NATIONAL DESIGN SPEC, BY AF&PA) AND TPI. ITW BCG CONNECTOR PLATES ARE MADE OF 20/18/16GA (W,H/SS/K) ASTM A653 GRADE 40/60 (W, K/H,SS) GALV. STEEL. APPLY PLATES TO EACH FACE OF TRUSS AND, UNLESS OTHERWISE LOCATED ON THIS DESIGN, POSITION PER DRAWINGS 160A-Z. ANY INSPECTION OF PLATES FOLLOWED BY (I) SHALL BE PER ANNEX A3 OF TPI1-2002 SEC.3. A SEAL ON THIS DRAWING INDICATES ACCEPTANCE OF PROFESSIONAL ENGINEERING RESPONSIBILITY SOLELY FOR THE TRUSS COMPONENT DESIGN SHOWN. THE SUITABILITY AND USE OF THIS COMPONENT FOR ANY BUILDING IS THE RESPONSIBILITY OF THE BUILDING DESIGNER PER ANSI/TPI 1 SEC. 2.

DOUGLAS FLEMING LICENSE No. 66648 STATE OF FLORIDA PROFESSIONAL ENGINEER

TC LL	20.0 PSF	REF	R8228- 60312
TC DL	10.0 PSF	DATE	12/18/09
BC DL	10.0 PSF	DRW	HCUSR8228 09352024
BC LL	0.0 PSF	HC-ENG	JB/DF
TOT.LD.	40.0 PSF	SEQN-	72978
DUR.FAC.	1.25	FROM	AH
SPACING	24.0"	JREF-	1TXP8228Z01

(9-244--Fill in later EDGLEY -- , ** - H9B)

Top chord 2x4 SP #2 Dense
Bot chord 2x4 SP #2 Dense
Webs 2x4 SP #3

Roof overhang supports 2.00 psf soffit load.

H = recommended connection based on manufacturer tested capacities and calculations. Conditions may exist that require different connections than indicated. Refer to manufacturer publication for additional information.

Bottom chord checked for 10.00 psf non-concurrent live load.

Deflection meets L/240 live and L/180 total load.

110 mph wind, 15.00 ft mean hgt, ASCE 7-05, CLOSED bldg, not located within 4.50 ft from roof edge, CAT II, EXP C, wind TC DL=5.0 psf, wind BC DL=5.0 psf. Iw=1.00 GCpi(+/-)=0.18

Wind reactions based on MWFRS pressures.

Right end vertical not exposed to wind pressure.

(A) Continuous lateral bracing equally spaced on member.

In lieu of structural panels use purlins to brace all flat TC @ 24" OC.

MWFRS loads based on trusses located at least 7.50 ft. from roof edge.

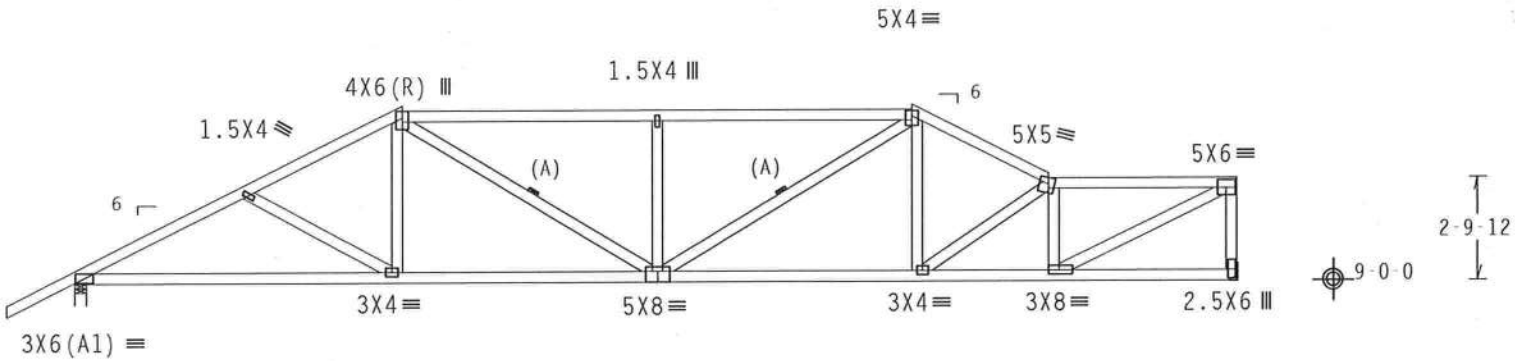

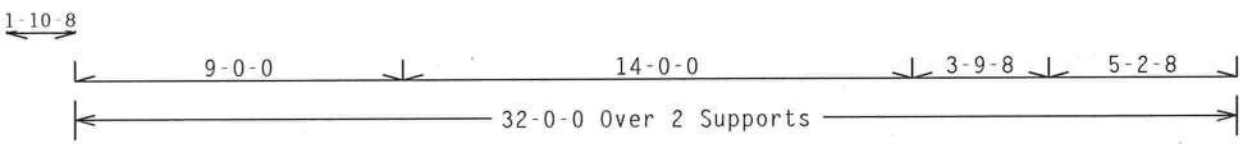

R=1453 U=385 W=4"
RL=138/-115

R=1307 U=349 H=Simpson HUS26
w/ (4) 10d Common, 0.148"x3.0" nails in Truss
w/ (14) 10d Common, 0.148"x3.0" nails in Girder
Girder is (2)2X6 min. So.Pine

Design Crit: FBC2007Res/TPI-2002(STD)

PLT TYP. Wave | FT/RT=20%(0%)/0(0) | 9.02.00 [illegible] | QTY:1 | FL/-/4/-/-/R/- | Scale =.1875"/Ft.

ALPINE
ITW Building Components Group Inc.
Haines City, FL 33844

WARNING TRUSSES REQUIRE EXTREME CARE IN FABRICATION, HANDLING, SHIPPING, INSTALLING AND BRACING. REFER TO BCSI (BUILDING COMPONENT SAFETY INFORMATION), PUBLISHED BY TPI (TRUSS PLATE INSTITUTE, 218 NORTH LEE STREET, SUITE 312, ALEXANDRIA, VA, 22314) AND WTCA (WOOD TRUSS COUNCIL OF AMERICA, 6300 ENTERPRISE LANE, MADISON, WI 53719) FOR SAFETY PRACTICES PRIOR TO PERFORMING THESE FUNCTIONS. UNLESS OTHERWISE INDICATED TOP CHORD SHALL HAVE PROPERLY ATTACHED STRUCTURAL PANELS AND BOTTOM CHORD SHALL HAVE A PROPERLY ATTACHED RIGID CEILING.

IMPORTANTFURNISH A COPY OF THIS DESIGN TO THE INSTALLATION CONTRACTOR. ITW BCG, INC. SHALL NOT BE RESPONSIBLE FOR ANY DEVIATION FROM THIS DESIGN; ANY FAILURE TO BUILD THE TRUSS IN CONFORMANCE WITH TPI; OR FABRICATING, HANDLING, SHIPPING, INSTALLING & BRACING OF TRUSSES.
DESIGN CONFORMS WITH APPLICABLE PROVISIONS OF NDS (NATIONAL DESIGN SPEC. BY AF&PA) AND TPI. ITW BCG CONNECTOR PLATES ARE MADE OF 20/18/16GA (W,H/SS/K) ASTM A653 GRADE 40/60 (W, K/H,SS) GALV. STEEL. APPLY PLATES TO EACH FACE OF TRUSS AND, UNLESS OTHERWISE LOCATED ON THIS DESIGN, POSITION PER DRAWINGS 160A-Z. ANY INSPECTION OF PLATES FOLLOWED BY (1) SHALL BE PER ANNEX A3 OF TPI1-2002 SEC.3. A SEAL ON THIS DRAWING INDICATES ACCEPTANCE OF PROFESSIONAL ENGINEERING RESPONSIBILITY SOLELY FOR THE TRUSS COMPONENT DESIGN SHOWN. THE SUITABILITY AND USE OF THIS COMPONENT FOR ANY BUILDING IS THE RESPONSIBILITY OF THE BUILDING DESIGNER PER ANSI/TPI 1 SEC. 2.

DOUGLAS FLEMING LICENSE No. 66648 STATE OF FLORIDA PROFESSIONAL ENGINEER
[illegible] 18 '09

TC LL	20.0 PSF	REF	R8228- 60313
TC DL	10.0 PSF	DATE	12/18/09
BC DL	10.0 PSF	DRW	HCUSR8228 09352025
BC LL	0.0 PSF	HC-ENG	JB/DF
TOT.LD.	40.0 PSF	SEQN-	72855
DUR.FAC.	1.25	FROM	AH
SPACING	24.0"	JREF-	1TXP8228701

(9-244--Fill in later EDGLEY -- , ** - H11B)

THIS DWG PREPARED FROM COMPUTER INPUT (LOADS & DIMENSIONS) SUBMITTED BY TRUSS MFR.

Top chord 2x4 SP #2 Dense
Bot chord 2x4 SP #2 Dense
Webs 2x4 SP #3

Roof overhang supports 2.00 psf soffit load.

H = recommended connection based on manufacturer tested capacities and calculations. Conditions may exist that require different connections than indicated. Refer to manufacturer publication for additional information.

Bottom chord checked for 10.00 psf non-concurrent live load.

MWFRS loads based on trusses located at least 15.00 ft. from roof edge.

110 mph wind, 15.00 ft mean hgt, ASCE 7-05, CLOSED bldg, not located within 4.50 ft from roof edge, CAT II, EXP C, wind TC DL=5.0 psf, wind BC DL=5.0 psf. Iw=1.00 GCpi(+/-)=0.18

Wind reactions based on MWFRS pressures.

In lieu of structural panels use purlins to brace all flat TC @ 24" OC.

Truss passed check for 20 psf additional bottom chord live load in areas with 42"-high x 24"-wide clearance.

Deflection meets L/240 live and L/180 total load.

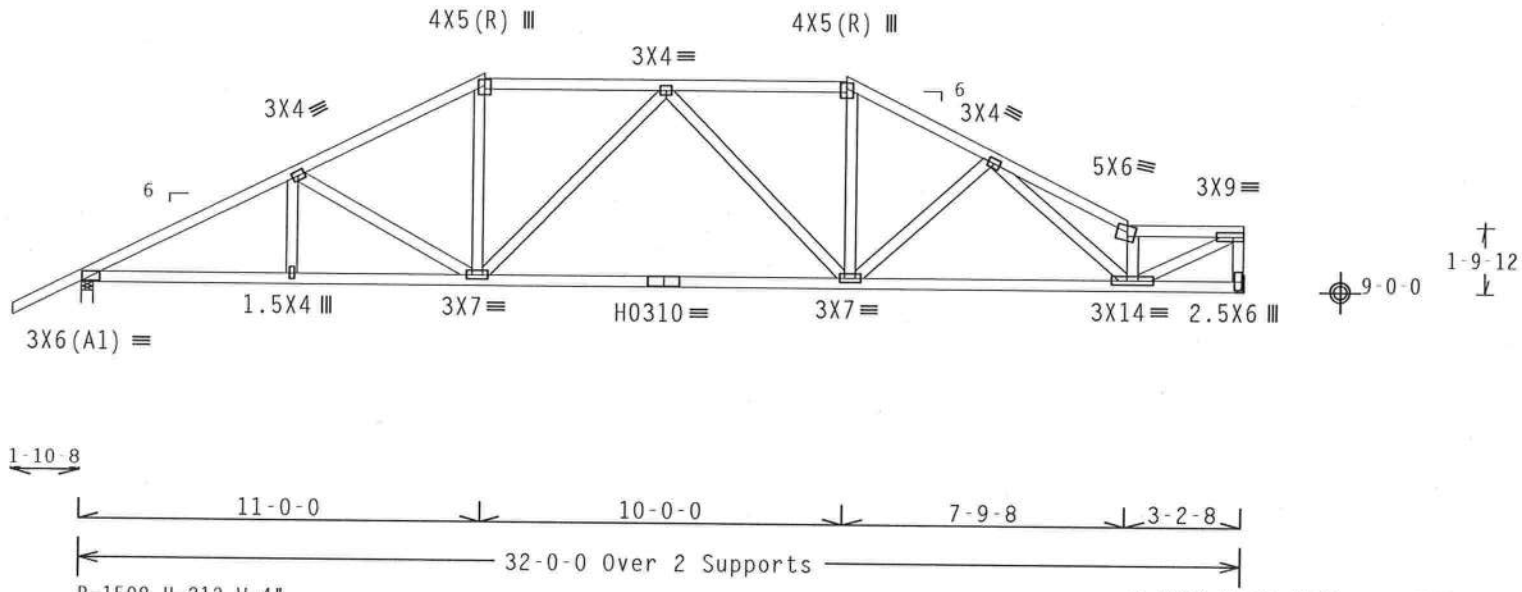

R=1508 U=212 W=4"
RL=177/-168

R=1362 U=181 H=Simpson HUS26
w/ (4) 10d Common, 0.148"x3.0" nails in Truss
w/ (14) 10d Common, 0.148"x3.0" nails in Girder
Girder is (2)2X6 min. So.Pine

Design Crit: FBC2007Res/TPI-2002(STD)

PLT TYP. 20 Gauge HS,Wave FT/RT=20%(0%)/0(0) 9.02.00 QTY:1 FL/-/4/-/-/R/- Scale =.1875"/Ft.

ALPINE
ITW Building Components Group Inc.
Haines City, FL 33844

WARNING TRUSSES REQUIRE EXTREME CARE IN FABRICATION, HANDLING, SHIPPING, INSTALLING AND BRACING. REFER TO BCSI (BUILDING COMPONENT SAFETY INFORMATION). PUBLISHED BY TPI (TRUSS PLATE INSTITUTE, 218 NORTH LEE STREET, SUITE 312, ALEXANDRIA, VA. 22314) AND WICA (WOOD TRUSS COUNCIL OF AMERICA, 6300 ENTERPRISE LANE, MADISON, WI 53719) FOR SAFETY PRACTICES PRIOR TO PERFORMING THESE FUNCTIONS. UNLESS OTHERWISE INDICATED TOP CHORD SHALL HAVE PROPERLY ATTACHED STRUCTURAL PANELS AND BOTTOM CHORD SHALL HAVE A PROPERLY ATTACHED RIGID CEILING.

IMPORTANTFURNISH A COPY OF THIS DESIGN TO THE INSTALLATION CONTRACTOR. ITW BCG, INC. SHALL NOT BE RESPONSIBLE FOR ANY DEVIATION FROM THIS DESIGN; ANY FAILURE TO BUILD THE TRUSS IN CONFORMANCE WITH TPI; OR FABRICATING, HANDLING, SHIPPING, INSTALLING & BRACING OF TRUSSES.
DESIGN CONFORMS WITH APPLICABLE PROVISIONS OF NDS (NATIONAL DESIGN SPEC. BY AF&PA) AND TPI. ITW BCG CONNECTOR PLATES ARE MADE OF 20/18/16GA (W,H/SS/K) ASTM A653 GRADE 40/60 (W, K/H,SS) GALV. STEEL. APPLY PLATES TO EACH FACE OF TRUSS AND, UNLESS OTHERWISE LOCATED ON THIS DESIGN, POSITION PER DRAWINGS 160A-Z. ANY INSPECTION OF PLATES FOLLOWED BY (1) SHALL BE PER ANNEX A3 OF TPI1-2002 SEC.3. A SEAL ON THIS DRAWING INDICATES ACCEPTANCE OF PROFESSIONAL ENGINEERING RESPONSIBILITY SOLELY FOR THE TRUSS COMPONENT DESIGN SHOWN. THE SUITABILITY AND USE OF THIS COMPONENT FOR ANY BUILDING IS THE RESPONSIBILITY OF THE BUILDING DESIGNER PER ANSI/TPI 1 SEC. 2.

DOUGLAS FLEMING LICENSE No. 66648 STATE OF FLORIDA PROFESSIONAL ENGINEER

TC LL	20.0 PSF	REF R8228- 60314
TC DL	10.0 PSF	DATE 12/18/09
BC DL	10.0 PSF	DRW HCUSR8228 09352026
BC LL	0.0 PSF	HC-ENG JB/DF
TOT.LD.	40.0 PSF	SEQN- 72866
DUR.FAC.	1.25	FROM AH

(9-244--Fill in later EDGLEY -- , ** - BH1)

Top chord 2x4 SP #2 Dense
Bot chord 2x4 SP #2 Dense
Webs 2x4 SP #3

Roof overhang supports 2.00 psf soffit load.

H = recommended connection based on manufacturer tested capacities and calculations. Conditions may exist that require different connections than indicated. Refer to manufacturer publication for additional information.

Bottom chord checked for 10.00 psf non-concurrent live load.

MWFRS loads based on trusses located at least 15.00 ft. from roof edge.

110 mph wind, 15.00 ft mean hgt, ASCE 7-05, CLOSED bldg, not located within 4.50 ft from roof edge, CAT II, EXP C, wind TC DL=5.0 psf, wind BC DL=5.0 psf. Iw=1.00 GCpi(+/-)=0.18

Wind reactions based on MWFRS pressures.

In lieu of structural panels use purlins to brace all flat TC @ 24" OC.

Truss passed check for 20 psf additional bottom chord live load in areas with 42"-high x 24"-wide clearance.

Deflection meets L/240 live and L/180 total load.

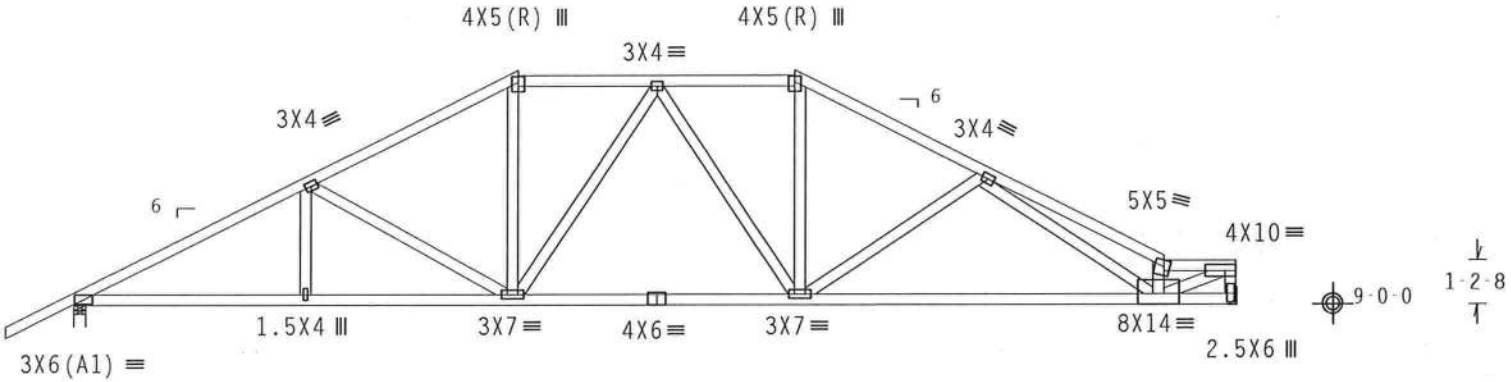

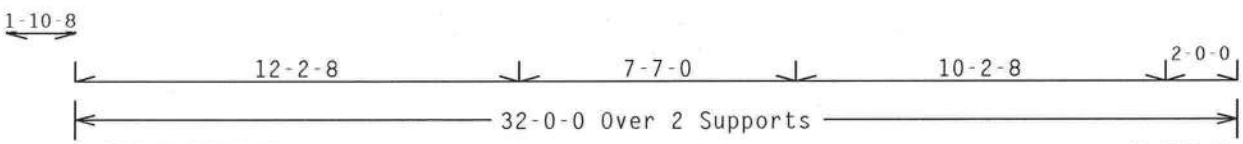

R=1507 U=187 W=4"
RL=201/-201

R=1361 U=141 H=Simpson HUS26
w/ (4) 10d Common, 0.148"x3.0" nails in Truss
w/ (14) 10d Common, 0.148"x3.0" nails in Girder
Girder is (2)2X6 min. So.Pine

Design Crit: FBC2007Res/TPI-2002(STD)

PLT TYP. Wave | FT/RT=20%(0%)/0(0) | 9.02.00 | QTY:1 | FL/-/4/-/-/R/- | Scale =.1875"/Ft.

ALPINE
ITW Building Components Group Inc.
Haines City, FL 33844

DOUGLAS FLEMING LICENSE No. 66648 STATE OF FLORIDA PROFESSIONAL ENGINEER

18 '09

TC LL	20.0 PSF	REF	R8228- 60315
TC DL	10.0 PSF	DATE	12/18/09
BC DL	10.0 PSF	DRW	HCUSR8228 09352027
BC LL	0.0 PSF	HC-ENG	JB/DF
TOT.LD.	40.0 PSF	SEQN-	72875
DUR.FAC.	1.25	FROM	AH

(9-244--Fill in later EDGLEY -- , ** - BH2)

THIS DWG PREPARED FROM COMPUTER INPUT (LOADS & DIMENSIONS) SUBMITTED BY TRUSS MFR.

Top chord 2x4 SP #2 Dense
Bot chord 2x4 SP #2 Dense
Webs 2x4 SP #3

110 mph wind, 15.00 ft mean hgt, ASCE 7-05, CLOSED bldg, not located within 4.50 ft from roof edge, CAT II, EXP C, wind TC DL=5.0 psf, wind BC DL=5.0 psf. Iw=1.00 GCpi(+/-)=0.18

Max JT VERT DEFL: LL: 0.19" DL: 0.20" recommended camber 3/8"

In lieu of structural panels use purlins to brace all flat TC @ 24" OC.

Bottom chord checked for 10.00 psf non-concurrent live load.

MWFRS loads based on trusses located at least 15.00 ft. from roof edge.

(I) - plates so marked were sized using a Fabrication Tolerance of 0% and a Rotational Tolerance of 0 degrees.

(**) 2 plate(s) require special positioning. Refer to scaled plate plot details for special positioning requirements.

Wind reactions based on MWFRS pressures.

H = recommended connection based on manufacturer tested capacities and calculations. Conditions may exist that require different connections than indicated. Refer to manufacturer publication for additional information.

Deflection meets L/240 live and L/180 total load.

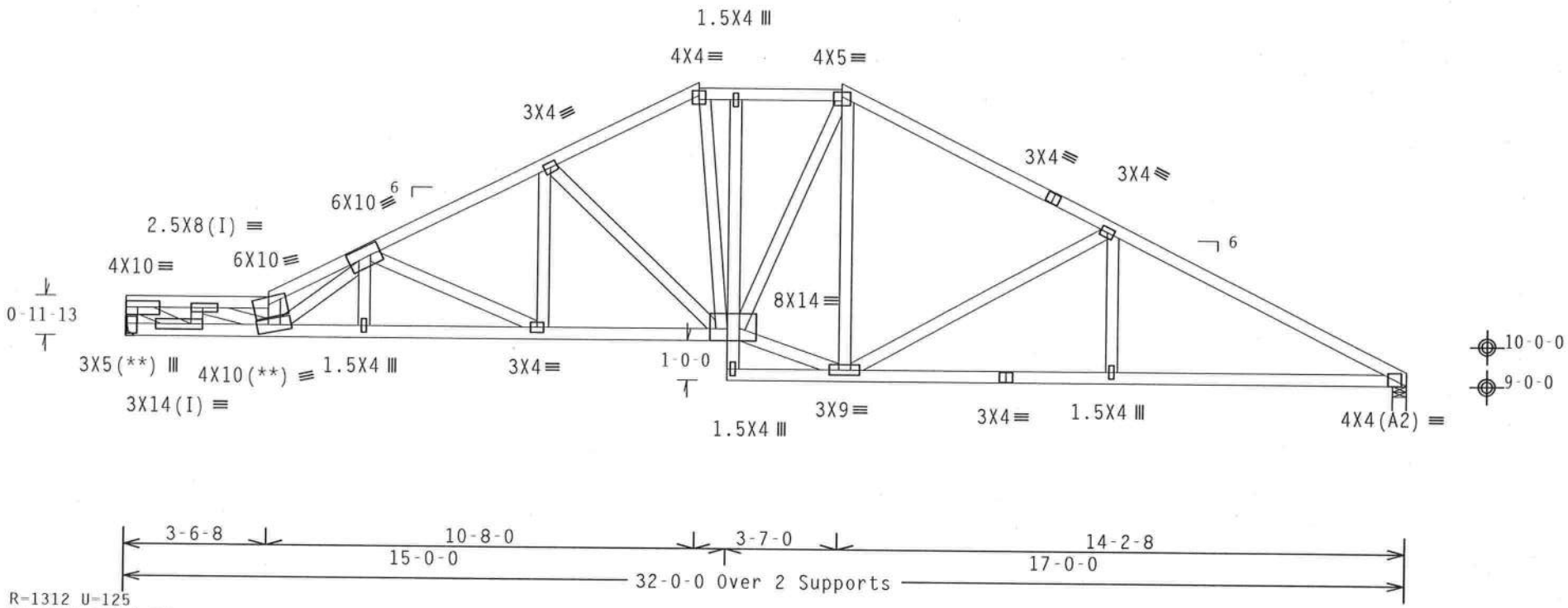

R=1312 U=125
RL=178/-204 H=Simpson HUS26
w/ (4) 10d Common, 0.148"x3.0" nails in Truss
w/ (14) 10d Common, 0.148"x3.0" nails in Girder
Girder is (2)2X6 min. So.Pine

R=1324 U=131 W=4"

Design Crit: FBC2007Res/TPI-2002(STD)

PLT TYP. Wave

FT/RT=20%(0%)/0(0)

9.02.00 [illegible] QTY:1

FL/-/4/-/-/R/-

Scale =.25"/Ft.

TC LL	20.0 PSF	REF R8228- 60316
TC DL	10.0 PSF	DATE 12/18/09
BC DL	10.0 PSF	DRW HCUSR8228 09352028
BC LL	0.0 PSF	HC-ENG JB/DF
TOT.LD.	40.0 PSF	SEQN- 72889
DUR.FAC.	1.25	
SPACING	24.0"	

WARNING TRUSSES REQUIRE EXTREME CARE IN FABRICATION, HANDLING, SHIPPING, INSTALLING AND BRACING. REFER TO BCSI (BUILDING COMPONENT SAFETY INFORMATION), PUBLISHED BY TPI (TRUSS PLATE INSTITUTE, 218 NORTH LEE STREET, SUITE 312, ALEXANDRIA, VA, 22314) AND WTCA (WOOD TRUSS COUNCIL OF AMERICA, 6300 ENTERPRISE LANE, MADISON, WI 53719) FOR SAFETY PRACTICES PRIOR TO PERFORMING THESE FUNCTIONS. UNLESS OTHERWISE INDICATED TOP CHORD SHALL HAVE PROPERLY ATTACHED STRUCTURAL PANELS AND BOTTOM CHORD SHALL HAVE A PROPERLY ATTACHED RIGID CEILING.

IMPORTANT FURNISH A COPY OF THIS DESIGN TO THE INSTALLATION CONTRACTOR. ITW BCG, INC. SHALL NOT BE RESPONSIBLE FOR ANY DEVIATION FROM THIS DESIGN; ANY FAILURE TO BUILD THE TRUSS IN CONFORMANCE WITH TPI; OR FABRICATING, HANDLING, SHIPPING, INSTALLING & BRACING OF TRUSSES. DESIGN CONFORMS WITH APPLICABLE PROVISIONS OF NDS (NATIONAL DESIGN SPEC. BY AF&PA) AND TPI. ITW BCG CONNECTOR PLATES ARE MADE OF 20/18/16GA (W.H/SS/K) ASTM A653 GRADE 40/60 (W. K/H.SS) GALV. STEEL. APPLY PLATES TO EACH FACE OF TRUSS AND, UNLESS OTHERWISE LOCATED ON THIS DESIGN, POSITION PER DRAWINGS 160A-Z. ANY INSPECTION OF PLATES FOLLOWED BY (I) SHALL BE PER ANNEX A3 OF TPI1-2002 SEC.3. A SEAL ON THIS DRAWING INDICATES ACCEPTANCE OF PROFESSIONAL ENGINEERING RESPONSIBILITY SOLELY FOR THE TRUSS COMPONENT DESIGN SHOWN. THE SUITABILITY AND USE OF THIS COMPONENT FOR ANY BUILDING IS THE RESPONSIBILITY OF THE BUILDING DESIGNER PER ANSI/TPI 1 SEC. 2.

ALPINE
ITW Building Components Group Inc.
Haines City, FL 33844
FL COA #0 278

DOUGLAS FLEMING LICENSE No. 66648 STATE OF FLORIDA PROFESSIONAL ENGINEER

12/18 '09

(9-244--Fill in later EDGLEY -- , ** - BH3)

Top chord 2x4 SP #2 Dense
Bot chord 2x4 SP #2 Dense
Webs 2x4 SP #3 :W2 2x4 SP #2 Dense:

Roof overhang supports 2.00 psf soffit load.

Max JT VERT DEFL: LL: 0.19" DL: 0.20" recommended camber 3/8"

In lieu of structural panels use purlins to brace all flat TC @ 24" OC.

Bottom chord checked for 10.00 psf non-concurrent live load.

MWFRS loads based on trusses located at least 15.00 ft. from roof edge.

110 mph wind, 15.00 ft mean hgt, ASCE 7-05, CLOSED bldg, not located within 4.50 ft from roof edge, CAT II, EXP C, wind TC DL=5.0 psf, wind BC DL=5.0 psf. Iw=1.00 GCpi(+/-)=0.18

Wind reactions based on MWFRS pressures.

H = recommended connection based on manufacturer tested capacities and calculations. Conditions may exist that require different connections than indicated. Refer to manufacturer publication for additional information.

Deflection meets L/240 live and L/180 total load.

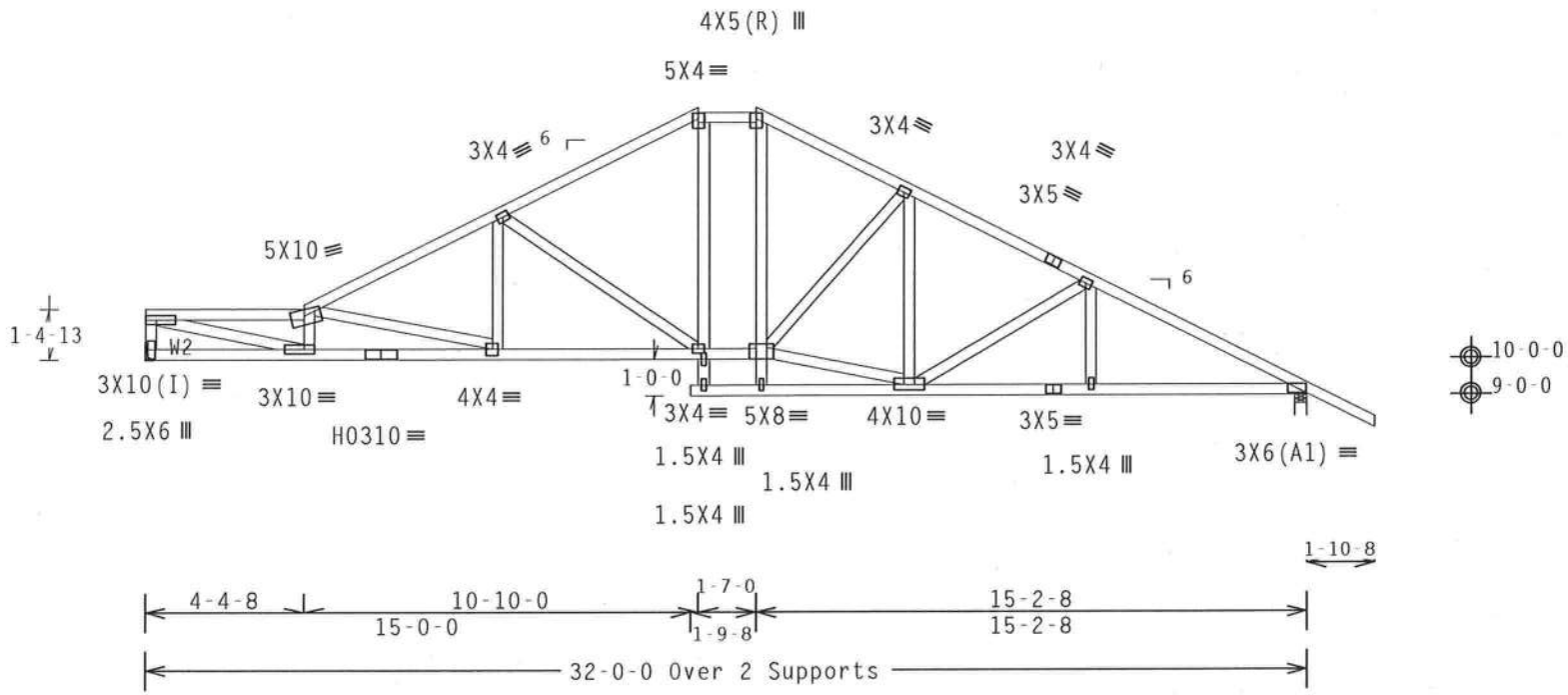

R=1307 U=112
RL=220/-237 H=Simpson HUS26
w/ (4) 10d Common, 0.148"x3.0" nails in Truss
w/ (14) 10d Common, 0.148"x3.0" nails in Girder
Girder is (2)2X6 min. So.Pine

R=1453 U=126 W=4"

Design Crit: FBC2007Res/TPI-2002(STD)

PLT TYP. 20 Gauge HS,Wave FT/RT=20%(0%)/0(0) 9.02.00 QTY:1 FL/-/4/-/-/R/- Scale =.1875"/Ft.

ALPINE
ITW Building Components Group Inc.
Haines City, FL 33844

WARNING TRUSSES REQUIRE EXTREME CARE IN FABRICATION, HANDLING, SHIPPING, INSTALLING AND BRACING. REFER TO BCSI (BUILDING COMPONENT SAFETY INFORMATION), PUBLISHED BY TPI (TRUSS PLATE INSTITUTE, 218 NORTH LEE STREET, SUITE 312, ALEXANDRIA, VA, 22314) AND WTCA (WOOD TRUSS COUNCIL OF AMERICA, 6300 ENTERPRISE LANE, MADISON, WI 53719) FOR SAFETY PRACTICES PRIOR TO PERFORMING THESE FUNCTIONS. UNLESS OTHERWISE INDICATED TOP CHORD SHALL HAVE PROPERLY ATTACHED STRUCTURAL PANELS AND BOTTOM CHORD SHALL HAVE A PROPERLY ATTACHED RIGID CEILING.

IMPORTANT FURNISH A COPY OF THIS DESIGN TO THE INSTALLATION CONTRACTOR. ITW BCG, INC. SHALL NOT BE RESPONSIBLE FOR ANY DEVIATION FROM THIS DESIGN; ANY FAILURE TO BUILD THE TRUSS IN CONFORMANCE WITH TPI; OR FABRICATING, HANDLING, SHIPPING, INSTALLING & BRACING OF TRUSSES.
DESIGN CONFORMS WITH APPLICABLE PROVISIONS OF NDS (NATIONAL DESIGN SPEC, BY AF&PA) AND TPI. ITW BCG CONNECTOR PLATES ARE MADE OF 20/18/16GA (W,H/SS/K) ASTM A653 GRADE 40/60 (W, K/H,SS) GALV. STEEL. APPLY PLATES TO EACH FACE OF TRUSS AND, UNLESS OTHERWISE LOCATED ON THIS DESIGN, POSITION PER DRAWINGS 160A-Z. ANY INSPECTION OF PLATES FOLLOWED BY (1) SHALL BE PER ANNEX A3 OF TPI1-2002 SEC.3. A SEAL ON THIS DRAWING INDICATES ACCEPTANCE OF PROFESSIONAL ENGINEERING RESPONSIBILITY SOLELY FOR THE TRUSS COMPONENT DESIGN SHOWN. THE SUITABILITY AND USE OF THIS COMPONENT FOR ANY BUILDING IS THE RESPONSIBILITY OF THE BUILDING DESIGNER PER ANSI/TPI 1 SEC. 2.

DOUGLAS FLEMING LICENSE No. 66648 STATE OF FLORIDA PROFESSIONAL ENGINEER
DEC 18 '09

TC LL	20.0 PSF	REF R8228- 60317
TC DL	10.0 PSF	DATE 12/18/09
BC DL	10.0 PSF	DRW HCUSR8228 09352029
BC LL	0.0 PSF	HC-ENG JB/DF
TOT.LD.	40.0 PSF	SEQN- 72900
DUR.FAC.	1.25	
SPACING	24.0"	JREF- 1TYP8228701

(9-244--Fill in later EDGLEY -- , ** - B1)

Top chord 2x4 SP #2 Dense
Bot chord 2x4 SP #2 Dense
Webs 2x4 SP #3

Left end vertical not exposed to wind pressure.

Roof overhang supports 2.00 psf soffit load.

H = recommended connection based on manufacturer tested capacities and calculations. Conditions may exist that require different connections than indicated. Refer to manufacturer publication for additional information.

Bottom chord checked for 10.00 psf non-concurrent live load.

MWFRS loads based on trusses located at least 15.00 ft. from roof edge.

110 mph wind, 15.00 ft mean hgt, ASCE 7-05, CLOSED bldg, not located within 4.50 ft from roof edge, CAT II, EXP C, wind TC DL=5.0 psf, wind BC DL=5.0 psf. Iw=1.00 GCpi(+/-)=0.18

Wind reactions based on MWFRS pressures.

Max JT VERT DEFL: LL: 0.17" DL: 0.18" recommended camber 3/8"

(A) Continuous lateral bracing equally spaced on member.

In lieu of structural panels use purlins to brace all flat TC @ 24" OC.

Deflection meets L/240 live and L/180 total load.

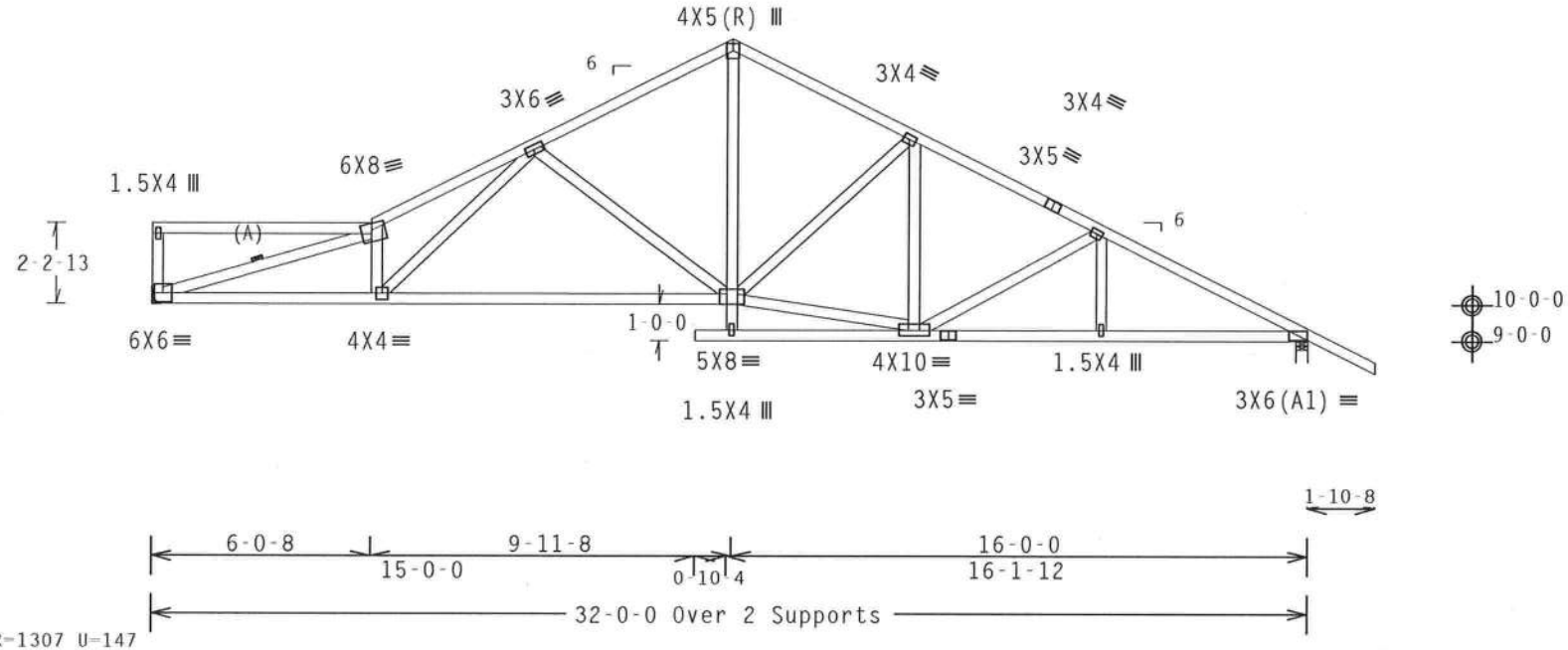

R=1307 U=147
RL=214/-243 H=Simpson HUS26
w/ (4) 10d Common, 0.148"x3.0" nails in Truss
w/ (14) 10d Common, 0.148"x3.0" nails in Girder
Girder is (2)2X6 min. So.Pine

R=1453 U=129 W=4"

Design Crit: FBC2007Res/TPI-2002(STD)

PLT TYP. Wave FT/RT=20%(0%)/0(0) 9.02.00 QTY:1 FL/-/4/-/-/R/- Scale =.1875"/Ft.

ALPINE
ITW Building Components Group Inc.
Haines City, FL 33844
FL COA #0 278

WARNING TRUSSES REQUIRE EXTREME CARE IN FABRICATION, HANDLING, SHIPPING, INSTALLING AND BRACING. REFER TO BCSI (BUILDING COMPONENT SAFETY INFORMATION), PUBLISHED BY TPI (TRUSS PLATE INSTITUTE, 218 NORTH LEE STREET, SUITE 312, ALEXANDRIA, VA, 22314) AND WTCA (WOOD TRUSS COUNCIL OF AMERICA, 6300 ENTERPRISE LANE, MADISON, WI 53719) FOR SAFETY PRACTICES PRIOR TO PERFORMING THESE FUNCTIONS. UNLESS OTHERWISE INDICATED TOP CHORD SHALL HAVE PROPERLY ATTACHED STRUCTURAL PANELS AND BOTTOM CHORD SHALL HAVE A PROPERLY ATTACHED RIGID CEILING.

IMPORTANTFURNISH A COPY OF THIS DESIGN TO THE INSTALLATION CONTRACTOR. ITW BCG, INC. SHALL NOT BE RESPONSIBLE FOR ANY DEVIATION FROM THIS DESIGN; ANY FAILURE TO BUILD THE TRUSS IN CONFORMANCE WITH TPI; OR FABRICATING, HANDLING, SHIPPING, INSTALLING & BRACING OF TRUSSES. DESIGN CONFORMS WITH APPLICABLE PROVISIONS OF NDS (NATIONAL DESIGN SPEC. BY AF&PA) AND TPI. ITW BCG CONNECTOR PLATES ARE MADE OF 20/18/16GA (W,H/SS/K) ASTM A653 GRADE 40/60 (W, K/H,SS) GALV. STEEL. APPLY PLATES TO EACH FACE OF TRUSS AND, UNLESS OTHERWISE LOCATED ON THIS DESIGN, POSITION PER DRAWINGS 160A-Z. ANY INSPECTION OF PLATES FOLLOWED BY (1) SHALL BE PER ANNEX A3 OF TPI1-2002 SEC.3. A SEAL ON THIS DRAWING INDICATES ACCEPTANCE OF PROFESSIONAL ENGINEERING RESPONSIBILITY SOLELY FOR THE TRUSS COMPONENT DESIGN SHOWN. THE SUITABILITY AND USE OF THIS COMPONENT FOR ANY BUILDING IS THE RESPONSIBILITY OF THE BUILDING DESIGNER PER ANSI/TPI 1 SEC. 2.

DOUGLAS FLEMING LICENSE No. 66648 STATE OF FLORIDA PROFESSIONAL ENGINEER

Dec 18 '09

TC LL	20.0 PSF	REF R8228- 60318
TC DL	10.0 PSF	DATE 12/18/09
BC DL	10.0 PSF	DRW HCUSR8228 09352030
BC LL	0.0 PSF	HC-ENG JB/DF
TOT.LD.	40.0 PSF	SEQN- 72910
DUR.FAC.	1.25	
SPACING	24.0"	JREF- 1TXP8228Z01

(9-244--Fill in later EDGLEY -- , ** - B2)

Top chord 2x4 SP #2 Dense
Bot chord 2x4 SP #2 Dense
Webs 2x4 SP #3

Left end vertical not exposed to wind pressure.

Roof overhang supports 2.00 psf soffit load.

In lieu of structural panels use purlins to brace all flat TC @ 24" OC.

Bottom chord checked for 10.00 psf non-concurrent live load.

MWFRS loads based on trusses located at least 15.00 ft. from roof edge.

110 mph wind, 15.00 ft mean hgt, ASCE 7-05, CLOSED bldg, not located within 4.50 ft from roof edge, CAT II, EXP C, wind TC DL=5.0 psf, wind BC DL=5.0 psf. Iw=1.00 GCpi(+/-)=0.18

Wind reactions based on MWFRS pressures.

H = recommended connection based on manufacturer tested capacities and calculations. Conditions may exist that require different connections than indicated. Refer to manufacturer publication for additional information.

Deflection meets L/240 live and L/180 total load.

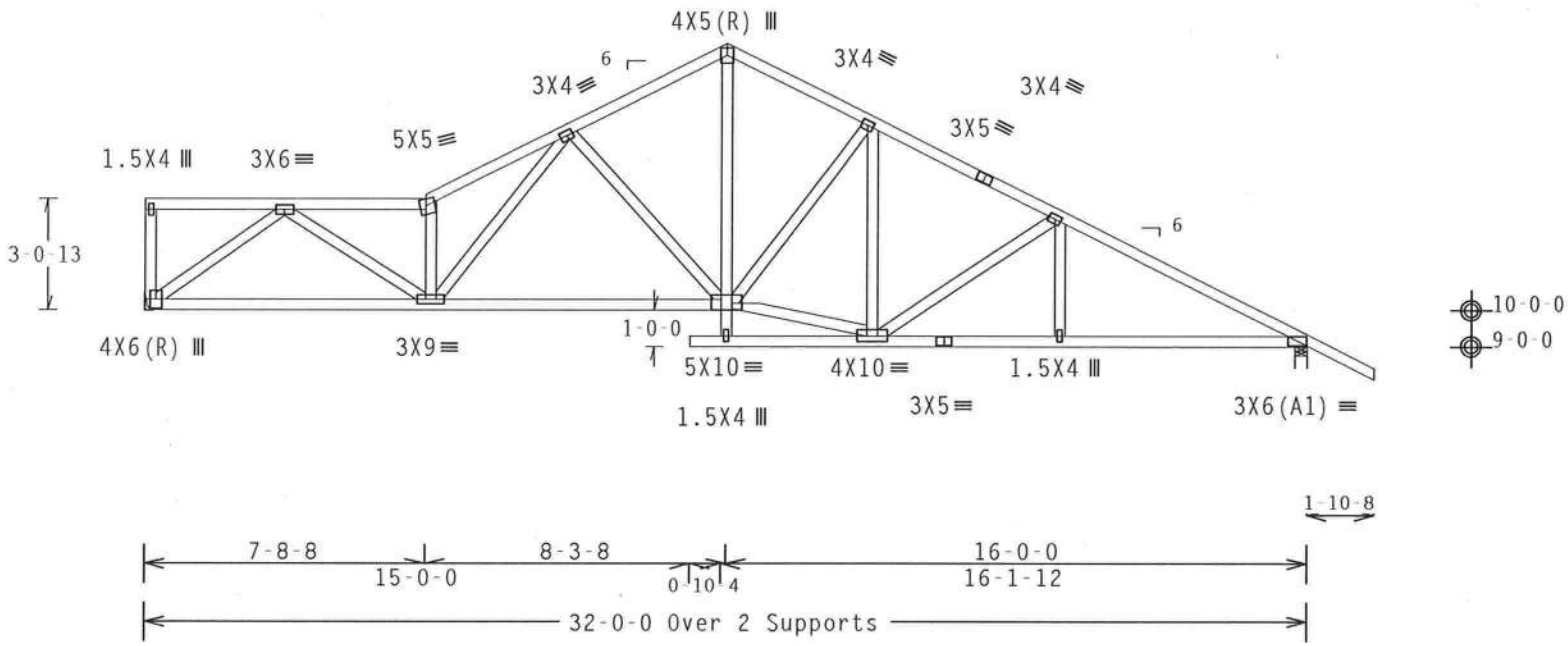

R=1307 U=181
RL=195/-236 H=Simpson HUS26
w/ (4) 10d Common, 0.148"x3.0" nails in Truss
w/ (14) 10d Common, 0.148"x3.0" nails in Girder
Girder is (2)2X6 min. So.Pine

R=1453 U=137 W=4"

Design Crit: FBC2007Res/TPI-2002(STD)

PLT TYP. Wave | FT/RT=20%(0%)/0(0) | 9.02.00 | QTY:1 | FL/-/4/-/-/R/- | Scale =.1875"/Ft.

ALPINE
ITW Building Components Group Inc.
Haines City, FL 33844
FL COA #9278

WARNING TRUSSES REQUIRE EXTREME CARE IN FABRICATION, HANDLING, SHIPPING, INSTALLING AND BRACING. REFER TO BCSI (BUILDING COMPONENT SAFETY INFORMATION), PUBLISHED BY TPI (TRUSS PLATE INSTITUTE, 218 NORTH LEE STREET, SUITE 312, ALEXANDRIA, VA, 22314) AND WTCA (WOOD TRUSS COUNCIL OF AMERICA, 6300 ENTERPRISE LANE, MADISON, WI 53719) FOR SAFETY PRACTICES PRIOR TO PERFORMING THESE FUNCTIONS. UNLESS OTHERWISE INDICATED TOP CHORD SHALL HAVE PROPERLY ATTACHED STRUCTURAL PANELS AND BOTTOM CHORD SHALL HAVE A PROPERLY ATTACHED RIGID CEILING.

IMPORTANT FURNISH A COPY OF THIS DESIGN TO THE INSTALLATION CONTRACTOR. ITW BCG, INC. SHALL NOT BE RESPONSIBLE FOR ANY DEVIATION FROM THIS DESIGN; ANY FAILURE TO BUILD THE TRUSS IN CONFORMANCE WITH TPI; OR FABRICATING, HANDLING, SHIPPING, INSTALLING & BRACING OF TRUSSES. DESIGN CONFORMS WITH APPLICABLE PROVISIONS OF NDS (NATIONAL DESIGN SPEC. BY AF&PA) AND TPI. ITW BCG CONNECTOR PLATES ARE MADE OF 20/18/16GA (W,H/SS/K) ASTM A653 GRADE 40/60 (W, K/H,SS) GALV. STEEL. APPLY PLATES TO EACH FACE OF TRUSS AND, UNLESS OTHERWISE LOCATED ON THIS DESIGN, POSITION PER DRAWINGS 160A-Z. ANY INSPECTION OF PLATES FOLLOWED BY (1) SHALL BE PER ANNEX A3 OF TPI1-2002 SEC.3. A SEAL ON THIS DRAWING INDICATES ACCEPTANCE OF PROFESSIONAL ENGINEERING RESPONSIBILITY SOLELY FOR THE TRUSS COMPONENT DESIGN SHOWN. THE SUITABILITY AND USE OF THIS COMPONENT FOR ANY BUILDING IS THE RESPONSIBILITY OF THE BUILDING DESIGNER PER ANSI/TPI 1 SEC. 2.

DOUGLAS FLEMING LICENSE No. 66648 STATE OF FLORIDA PROFESSIONAL ENGINEER

18 '09

TC LL	20.0 PSF	REF	R8228- 60319
TC DL	10.0 PSF	DATE	12/18/09
BC DL	10.0 PSF	DRW	HCUSR8228 09352031
BC LL	0.0 PSF	HC-ENG	JB/DF
TOT.LD.	40.0 PSF	SEQN-	72924
DUR.FAC.	1.25	FROM	AH
SPACING	24.0"	JREF-	1TXP8228Z01

Top chord 2x4 SP #2 Dense
Bot chord 2x4 SP #2 Dense :B3 2x6 SP #2:
Webs 2x4 SP #3

Left end vertical not exposed to wind pressure.

H = recommended connection based on manufacturer tested capacities and calculations. Conditions may exist that require different connections than indicated. Refer to manufacturer publication for additional information.

Deflection meets L/240 live and L/180 total load.

110 mph wind, 15.00 ft mean hgt, ASCE 7-05, CLOSED bldg, not located within 4.50 ft from roof edge, CAT II, EXP C, wind TC DL=5.0 psf, wind BC DL=5.0 psf. Iw=1.00 GCpi(+/-)=0.18

Wind reactions based on MWFRS pressures.

In lieu of structural panels use purlins to brace all flat TC @ 24" OC.

Bottom chord checked for 10.00 psf non-concurrent live load.

MWFRS loads based on trusses located at least 15.00 ft. from roof edge.

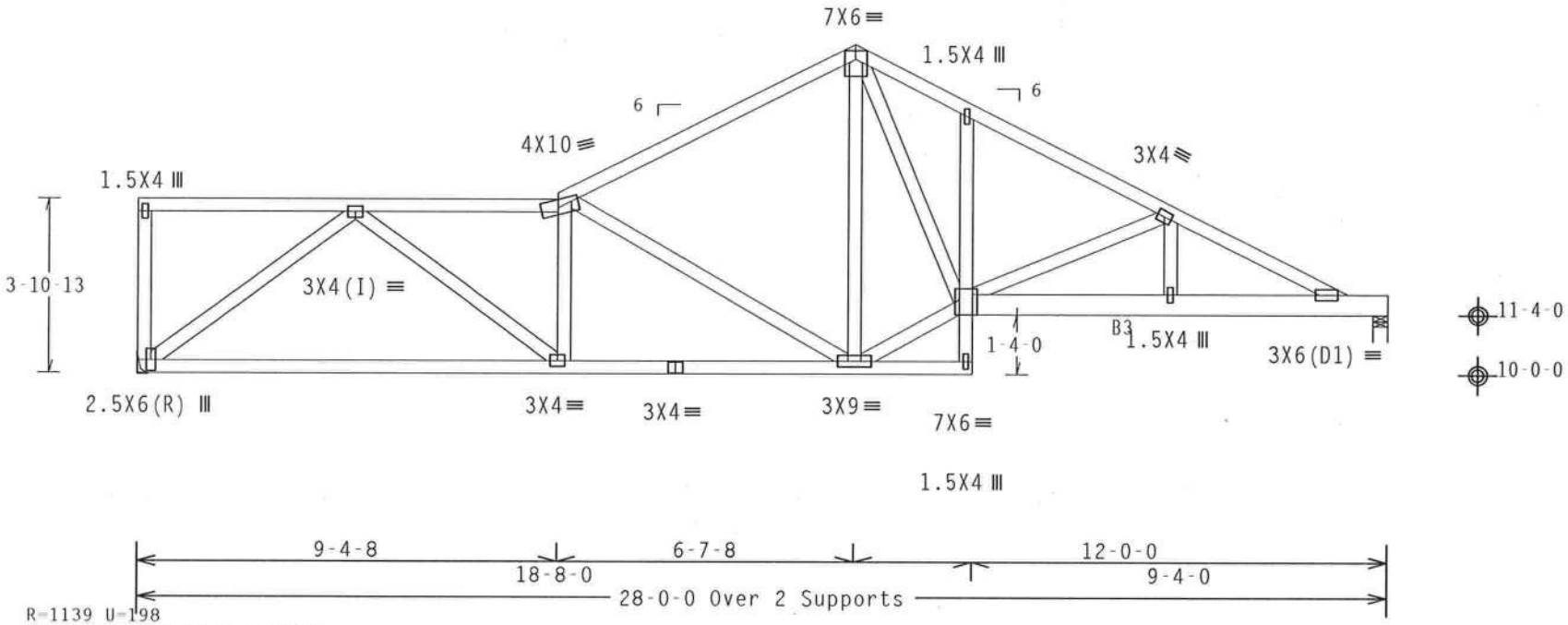

R=1139 U=198
RL=116/-150 H=Simpson LUS26
w/ (4) 10d Common, 0.148"x3.0" nails in Truss
w/ (4) 10d Common, 0.148"x3.0" nails in Girder
Girder is (2)2X6 min. So.Pine

R=1165 U=91 W=4"

Design Crit: FBC2007Res/TPI-2002(STD)

PLT TYP. Wave | FT/RT=20%(0%)/0(0) | 9.02.00 [illegible] | QTY:1 | FL/-/4/-/-/R/- | Scale =.25"/Ft.

ALPINE
ITW Building Components Group Inc.
Haines City, FL 33844
FL COA #0278

WARNING TRUSSES REQUIRE EXTREME CARE IN FABRICATION, HANDLING, SHIPPING, INSTALLING AND BRACING. REFER TO BCSI (BUILDING COMPONENT SAFETY INFORMATION), PUBLISHED BY TPI (TRUSS PLATE INSTITUTE, 218 NORTH LEE STREET, SUITE 312, ALEXANDRIA, VA, 22314) AND WTCA (WOOD TRUSS COUNCIL OF AMERICA, 6300 ENTERPRISE LANE, MADISON, WI 53719) FOR SAFETY PRACTICES PRIOR TO PERFORMING THESE FUNCTIONS. UNLESS OTHERWISE INDICATED TOP CHORD SHALL HAVE PROPERLY ATTACHED STRUCTURAL PANELS AND BOTTOM CHORD SHALL HAVE A PROPERLY ATTACHED RIGID CEILING.

IMPORTANTFURNISH A COPY OF THIS DESIGN TO THE INSTALLATION CONTRACTOR. ITW BCG, INC. SHALL NOT BE RESPONSIBLE FOR ANY DEVIATION FROM THIS DESIGN; ANY FAILURE TO BUILD THE TRUSS IN CONFORMANCE WITH TPI; OR FABRICATING, HANDLING, SHIPPING, INSTALLING & BRACING OF TRUSSES. DESIGN CONFORMS WITH APPLICABLE PROVISIONS OF NDS (NATIONAL DESIGN SPEC. BY AF&PA) AND TPI. ITW BCG CONNECTOR PLATES ARE MADE OF 20/18/16GA (W,H/SS/K) ASTM A653 GRADE 40/60 (W, K/H,SS) GALV. STEEL. APPLY PLATES TO EACH FACE OF TRUSS AND, UNLESS OTHERWISE LOCATED ON THIS DESIGN, POSITION PER DRAWINGS 160A-Z. ANY INSPECTION OF PLATES FOLLOWED BY (1) SHALL BE PER ANNEX A3 OF TPI1-2002 SEC.3. A SEAL ON THIS DRAWING INDICATES ACCEPTANCE OF PROFESSIONAL ENGINEERING RESPONSIBILITY SOLELY FOR THE TRUSS COMPONENT DESIGN SHOWN. THE SUITABILITY AND USE OF THIS COMPONENT FOR ANY BUILDING IS THE RESPONSIBILITY OF THE BUILDING DESIGNER PER ANSI/TPI 1 SEC. 2.

DOUGLAS FLEMING LICENSE No. 66648 STATE OF FLORIDA PROFESSIONAL ENGINEER

TC LL	20.0 PSF	REF R8228- 60320
TC DL	10.0 PSF	DATE 12/18/09
BC DL	10.0 PSF	DRW HCUSR8228 09352032
BC LL	0.0 PSF	HC-ENG JB/DF
TOT.LD.	40.0 PSF	SEQN- 72936
DUR.FAC.	1.25	FROM AH
SPACING	24.0"	JREF- 1TXP8228Z01

12/18 '09

(9-244--Fill in later EDGLEY -- , ** - B4)

Top chord 2x4 SP #2 Dense
Bot chord 2x4 SP #2 Dense
Webs 2x4 SP #3

Left end vertical not exposed to wind pressure.

H = recommended connection based on manufacturer tested capacities and calculations. Conditions may exist that require different connections than indicated. Refer to manufacturer publication for additional information.

Bottom chord checked for 10.00 psf non-concurrent live load.

MWFRS loads based on trusses located at least 15.25 ft. from roof edge.

110 mph wind, 15.25 ft mean hgt, ASCE 7-05, CLOSED bldg, not located within 4.50 ft from roof edge, CAT II, EXP C, wind TC DL=5.0 psf, wind BC DL=5.0 psf. Iw=1.00 GCpi(+/-)=0.18

Wind reactions based on MWFRS pressures.

(A) Continuous lateral bracing equally spaced on member.

In lieu of structural panels use purlins to brace all flat TC @ 24" OC.

Deflection meets L/240 live and L/180 total load.

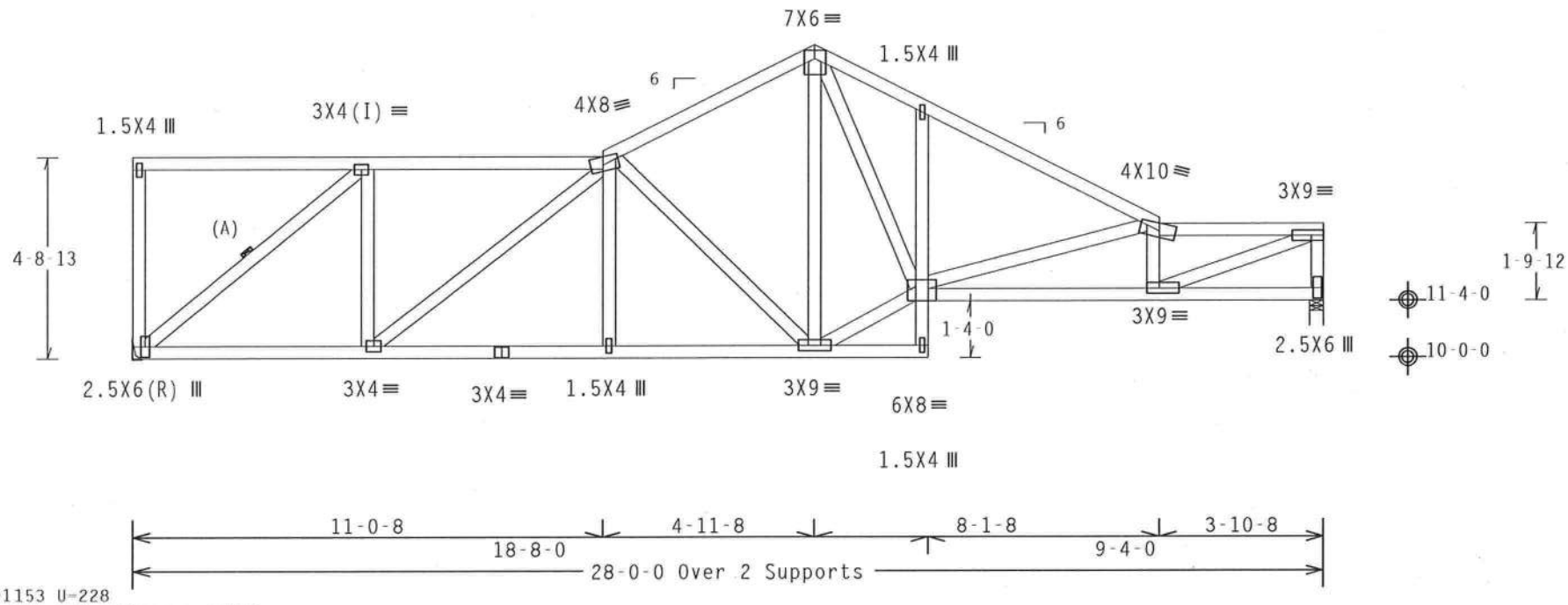

R=1153 U=228
RL=86/-111 H=Simpson LUS26
w/ (4) 10d Common, 0.148"x3.0" nails in Truss
w/ (4) 10d Common, 0.148"x3.0" nails in Girder
Girder is (2)2X6 min. So.Pine

R=1153 U=112 W=4"

Design Crit: FBC2007Res/TPI-2002(STD)

PLT TYP. Wave | FT/RT=20%(0%)/0(0) | 9.02.00 | QTY:1 | FL/-/4/-/-/R/- | Scale =.25"/Ft.

ALPINE
ITW Building Components Group Inc.
Haines City, FL 33844
FL COA #0278

WARNING TRUSSES REQUIRE EXTREME CARE IN FABRICATION, HANDLING, SHIPPING, INSTALLING AND BRACING. REFER TO BCSI (BUILDING COMPONENT SAFETY INFORMATION), PUBLISHED BY TPI (TRUSS PLATE INSTITUTE, 218 NORTH LEE STREET, SUITE 312, ALEXANDRIA, VA, 22314) AND WTCA (WOOD TRUSS COUNCIL OF AMERICA, 6300 ENTERPRISE LANE, MADISON, WI 53719) FOR SAFETY PRACTICES PRIOR TO PERFORMING THESE FUNCTIONS. UNLESS OTHERWISE INDICATED TOP CHORD SHALL HAVE PROPERLY ATTACHED STRUCTURAL PANELS AND BOTTOM CHORD SHALL HAVE A PROPERLY ATTACHED RIGID CEILING.

IMPORTANT FURNISH A COPY OF THIS DESIGN TO THE INSTALLATION CONTRACTOR. ITW BCG, INC. SHALL NOT BE RESPONSIBLE FOR ANY DEVIATION FROM THIS DESIGN; ANY FAILURE TO BUILD THE TRUSS IN COMFORMANCE WITH TPI; OR FABRICATING, HANDLING, SHIPPING, INSTALLING & BRACING OF TRUSSES. DESIGN CONFORMS WITH APPLICABLE PROVISIONS OF NDS (NATIONAL DESIGN SPEC. BY AF&PA) AND TPI. ITW BCG CONNECTOR PLATES ARE MADE OF 20/18/16GA (W,H/SS/K) ASTM A653 GRADE 40/60 (W, K/H,SS) GALV. STEEL. APPLY PLATES TO EACH FACE OF TRUSS AND, UNLESS OTHERWISE LOCATED ON THIS DESIGN, POSITION PER DRAWINGS 160A-Z. ANY INSPECTION OF PLATES FOLLOWED BY (1) SHALL BE PER ANNEX A3 OF TPI1-2002 SEC.3. A SEAL ON THIS DRAWING INDICATES ACCEPTANCE OF PROFESSIONAL ENGINEERING RESPONSIBILITY SOLELY FOR THE TRUSS COMPONENT DESIGN SHOWN. THE SUITABILITY AND USE OF THIS COMPONENT FOR ANY BUILDING IS THE RESPONSIBILITY OF THE BUILDING DESIGNER PER ANSI/TPI 1 SEC. 2.

DOUGLAS FLEMING LICENSE No. 66648 STATE OF FLORIDA PROFESSIONAL ENGINEER

DEC 18 '09

TC LL	20.0 PSF	REF	R8228- 60321
TC DL	10.0 PSF	DATE	12/18/09
BC DL	10.0 PSF	DRW	HCUSR8228 09352033
BC LL	0.0 PSF	HC-ENG	JB/DF
TOT.LD.	40.0 PSF	SEQN-	72944
DUR.FAC.	1.25	FROM	AH
SPACING	24.0"	JREF-	1TXP8228Z01

(9-244--Fill in later EDGLEY -- , ** - B5)

THIS DWG PREPARED FROM COMPUTER INPUT (LOADS & DIMENSIONS) SUBMITTED BY TRUSS MFR.

Top chord 2x4 SP #2 Dense
Bot chord 2x4 SP #2 Dense
Webs 2x4 SP #3

End verticals not exposed to wind pressure.

H = recommended connection based on manufacturer tested capacities and calculations. Conditions may exist that require different connections than indicated. Refer to manufacturer publication for additional information.

Bottom chord checked for 10.00 psf non-concurrent live load.

MWFRS loads based on trusses located at least 15.75 ft. from roof edge.

110 mph wind, 15.75 ft mean hgt, ASCE 7-05, CLOSED bldg, not located within 4.50 ft from roof edge, CAT II, EXP C, wind TC DL=5.0 psf, wind BC DL=5.0 psf. Iw=1.00 GCpi(+/-)=0.18

Wind reactions based on MWFRS pressures.

(A) Continuous lateral bracing equally spaced on member.

In lieu of structural panels use purlins to brace all flat TC @ 24" OC.

Deflection meets L/240 live and L/180 total load.

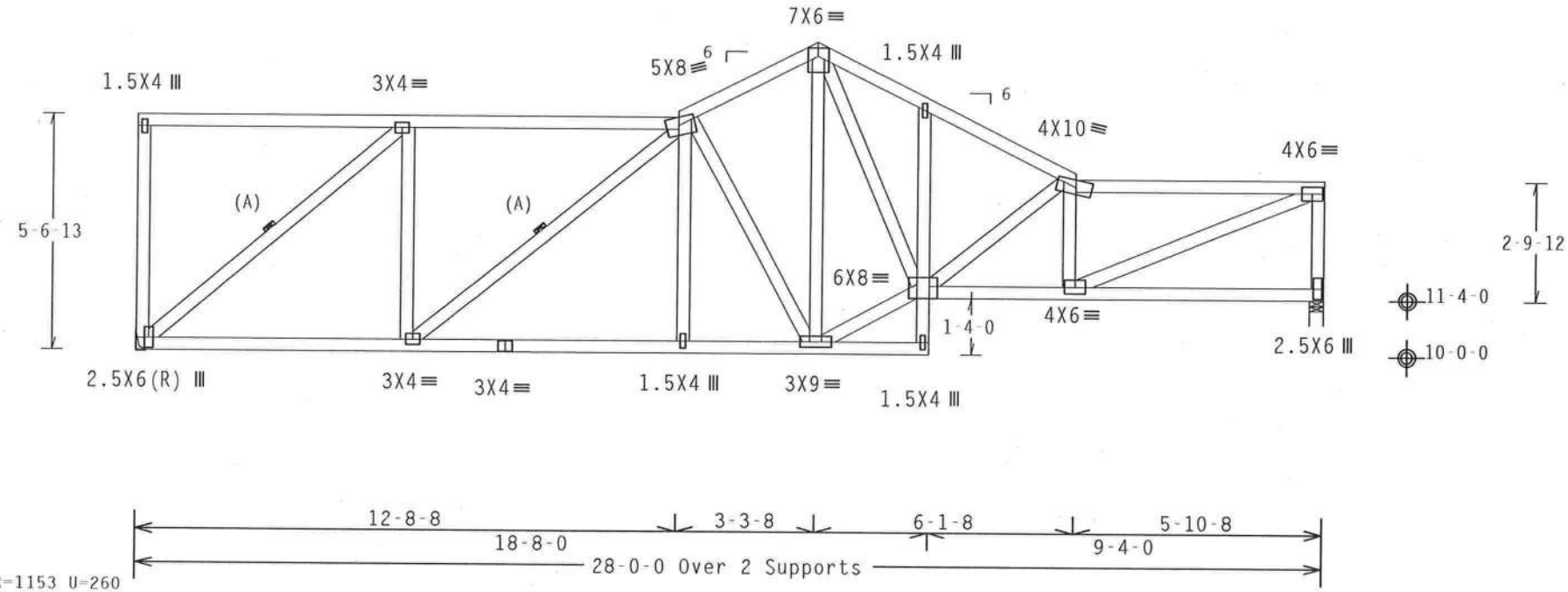

R=1153 U=260
RL=60/-82 H=Simpson LUS26
w/ (4) 10d Common, 0.148"x3.0" nails in Truss
w/ (4) 10d Common, 0.148"x3.0" nails in Girder
Girder is (2)2X6 min. So.Pine

R=1153 U=194 W=4"

Design Crit: FBC2007Res/TPI-2002(STD)
FT/RT=20%(0%)/0(0)

PLT TYP. Wave

9.02.00 [illegible] QTY:1 FL/-/4/-/-/R/- Scale =.25"/Ft.

ALPINE
ITW Building Components Group Inc.
Haines City, FL 33844
FL COA #0279

WARNING TRUSSES REQUIRE EXTREME CARE IN FABRICATION, HANDLING, SHIPPING, INSTALLING AND BRACING. REFER TO BCSI (BUILDING COMPONENT SAFETY INFORMATION), PUBLISHED BY TPI (TRUSS PLATE INSTITUTE, 218 NORTH LEE STREET, SUITE 312, ALEXANDRIA, VA, 22314) AND WTCA (WOOD TRUSS COUNCIL OF AMERICA, 6300 ENTERPRISE LANE, MADISON, WI 53719) FOR SAFETY PRACTICES PRIOR TO PERFORMING THESE FUNCTIONS. UNLESS OTHERWISE INDICATED TOP CHORD SHALL HAVE PROPERLY ATTACHED STRUCTURAL PANELS AND BOTTOM CHORD SHALL HAVE A PROPERLY ATTACHED RIGID CEILING.

IMPORTANTFURNISH A COPY OF THIS DESIGN TO THE INSTALLATION CONTRACTOR. ITW BCG, INC. SHALL NOT BE RESPONSIBLE FOR ANY DEVIATION FROM THIS DESIGN; ANY FAILURE TO BUILD THE TRUSS IN CONFORMANCE WITH TPI; OR FABRICATING, HANDLING, SHIPPING, INSTALLING & BRACING OF TRUSSES. DESIGN CONFORMS WITH APPLICABLE PROVISIONS OF NDS (NATIONAL DESIGN SPEC. BY AF&PA) AND TPI. ITW BCG CONNECTOR PLATES ARE MADE OF 20/18/16GA (W,H/SS/K) ASTM A653 GRADE 40/60 (W, K/H,SS) GALV. STEEL. APPLY PLATES TO EACH FACE OF TRUSS AND, UNLESS OTHERWISE LOCATED ON THIS DESIGN, POSITION PER DRAWINGS 160A-Z. ANY INSPECTION OF PLATES FOLLOWED BY (1) SHALL BE PER ANNEX A3 OF TPI1-2002 SEC.3. A SEAL ON THIS DRAWING INDICATES ACCEPTANCE OF PROFESSIONAL ENGINEERING RESPONSIBILITY SOLELY FOR THE TRUSS COMPONENT DESIGN SHOWN. THE SUITABILITY AND USE OF THIS COMPONENT FOR ANY BUILDING IS THE RESPONSIBILITY OF THE BUILDING DESIGNER PER ANSI/TPI 1 SEC. 2.

DOUGLAS FLEMING LICENSE No. 66648 STATE OF FLORIDA PROFESSIONAL ENGINEER

[illegible] 18 '09

TC LL	20.0 PSF	REF	R8228- 60322
TC DL	10.0 PSF	DATE	12/18/09
BC DL	10.0 PSF	DRW	HCUSR8228 09352034
BC LL	0.0 PSF	HC-ENG	JB/DF
TOT.LD.	40.0 PSF	SEQN-	72952
DUR.FAC.	1.25	FROM	AH
SPACING	24.0"	JREF	[illegible]

(9-244--Fill in later EDGLEY -- , ** - B6)

Top chord 2x4 SP #2 Dense
Bot chord 2x4 SP #2 Dense
Webs 2x4 SP #3

Left end vertical not exposed to wind pressure.

H = recommended connection based on manufacturer tested capacities and calculations. Conditions may exist that require different connections than indicated. Refer to manufacturer publication for additional information.

Truss passed check for 20 psf additional bottom chord live load in areas with 42"-high x 24"-wide clearance.

MWFRS loads based on trusses located at least 15.28 ft. from roof edge.

110 mph wind, 15.28 ft mean hgt, ASCE 7-05, CLOSED bldg, not located within 4.50 ft from roof edge, CAT II, EXP C, wind TC DL=5.0 psf, wind BC DL=5.0 psf. Iw=1.00 GCpi(+/-)=0.18

Wind reactions based on MWFRS pressures.

(A) Continuous lateral bracing equally spaced on member.

In lieu of structural panels use purlins to brace all flat TC @ 24" OC.

Bottom chord checked for 10.00 psf non-concurrent live load.

Deflection meets L/240 live and L/180 total load.

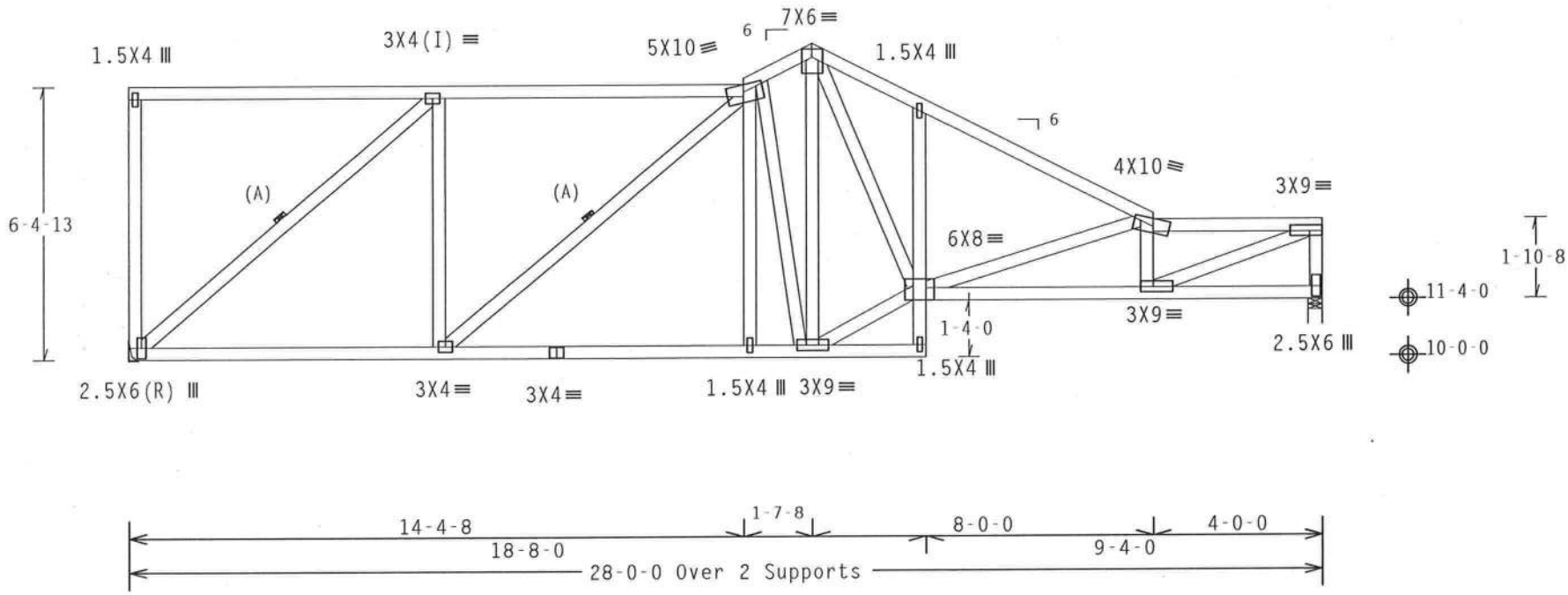

R=1311 U=278
RL=48/-97 H=Simpson HUS26
w/ (4) 10d Common, 0.148"x3.0" nails in Truss
w/ (14) 10d Common, 0.148"x3.0" nails in Girder
Girder is (2)2X6 min. So.Pine
PLT TYP. Wave

R=1189 U=154 W=4"

Design Crit: FBC2007Res/TPI-2002(STD)
FT/RT=20%(0%)/0(0)

9.02.00 [illegible] QTY:1 FL/-/4/-/-/R/- Scale =.25"/Ft.

ALPINE
ITW Building Components Group Inc.
Haines City, FL 33844

WARNING TRUSSES REQUIRE EXTREME CARE IN FABRICATION, HANDLING, SHIPPING, INSTALLING AND BRACING. REFER TO BCSI (BUILDING COMPONENT SAFETY INFORMATION), PUBLISHED BY TPI (TRUSS PLATE INSTITUTE, 218 NORTH LEE STREET, SUITE 312, ALEXANDRIA, VA, 22314) AND WTCA (WOOD TRUSS COUNCIL OF AMERICA, 6300 ENTERPRISE LANE, MADISON, WI 53719) FOR SAFETY PRACTICES PRIOR TO PERFORMING THESE FUNCTIONS. UNLESS OTHERWISE INDICATED TOP CHORD SHALL HAVE PROPERLY ATTACHED STRUCTURAL PANELS AND BOTTOM CHORD SHALL HAVE A PROPERLY ATTACHED RIGID CEILING.

IMPORTANT FURNISH A COPY OF THIS DESIGN TO THE INSTALLATION CONTRACTOR. ITW BCG, INC. SHALL NOT BE RESPONSIBLE FOR ANY DEVIATION FROM THIS DESIGN; ANY FAILURE TO BUILD THE TRUSS IN CONFORMANCE WITH TPI; OR FABRICATING, HANDLING, SHIPPING, INSTALLING & BRACING OF TRUSSES.
DESIGN CONFORMS WITH APPLICABLE PROVISIONS OF NDS (NATIONAL DESIGN SPEC. BY AF&PA) AND TPI. ITW BCG CONNECTOR PLATES ARE MADE OF 20/18/16GA (W,H/SS/K) ASTM A653 GRADE 40/60 (W, K/H,SS) GALV. STEEL. APPLY PLATES TO EACH FACE OF TRUSS AND, UNLESS OTHERWISE LOCATED ON THIS DESIGN, POSITION PER DRAWINGS 160A-Z. ANY INSPECTION OF PLATES FOLLOWED BY (1) SHALL BE PER ANNEX A3 OF TPI1-2002 SEC.3. A SEAL ON THIS DRAWING INDICATES ACCEPTANCE OF PROFESSIONAL ENGINEERING RESPONSIBILITY SOLELY FOR THE TRUSS COMPONENT DESIGN SHOWN. THE SUITABILITY AND USE OF THIS COMPONENT FOR ANY BUILDING IS THE RESPONSIBILITY OF THE BUILDING DESIGNER PER ANSI/TPI 1 SEC. 2.

DOUGLAS FLEMING LICENSE No. 66648 STATE OF FLORIDA PROFESSIONAL ENGINEER
[illegible] 18 '09

TC LL	20.0 PSF	REF	R8228- 60323
TC DL	10.0 PSF	DATE	12/18/09
BC DL	10.0 PSF	DRW	HCUSR8228 09352035
BC LL	0.0 PSF	HC-ENG	JB/DF
TOT.LD.	40.0 PSF	SEQN-	72960
DUR.FAC.	1.25	FROM	AH
SPACING	24.0"	JREF-	1TXP8228Z01

(9-244--Fill in later EDGLEY -- , ** - B7)

Top chord 2x4 SP #2 Dense
Bot chord 2x4 SP #2 Dense :B3 2x6 SP #2:
Webs 2x4 SP #3

Left end vertical not exposed to wind pressure.

H = recommended connection based on manufacturer tested capacities and calculations. Conditions may exist that require different connections than indicated. Refer to manufacturer publication for additional information.

Truss passed check for 20 psf additional bottom chord live load in areas with 42"-high x 24"-wide clearance.

MWFRS loads based on trusses located at least 15.00 ft. from roof edge.

110 mph wind, 15.00 ft mean hgt, ASCE 7-05, CLOSED bldg, not located within 4.50 ft from roof edge, CAT II, EXP C, wind TC DL=5.0 psf, wind BC DL=5.0 psf. Iw=1.00 GCpi(+/-)=0.18

Wind reactions based on MWFRS pressures.

(A) Continuous lateral bracing equally spaced on member.

In lieu of structural panels use purlins to brace all flat TC @ 24" OC.

Bottom chord checked for 10.00 psf non-concurrent live load.

Deflection meets L/240 live and L/180 total load.

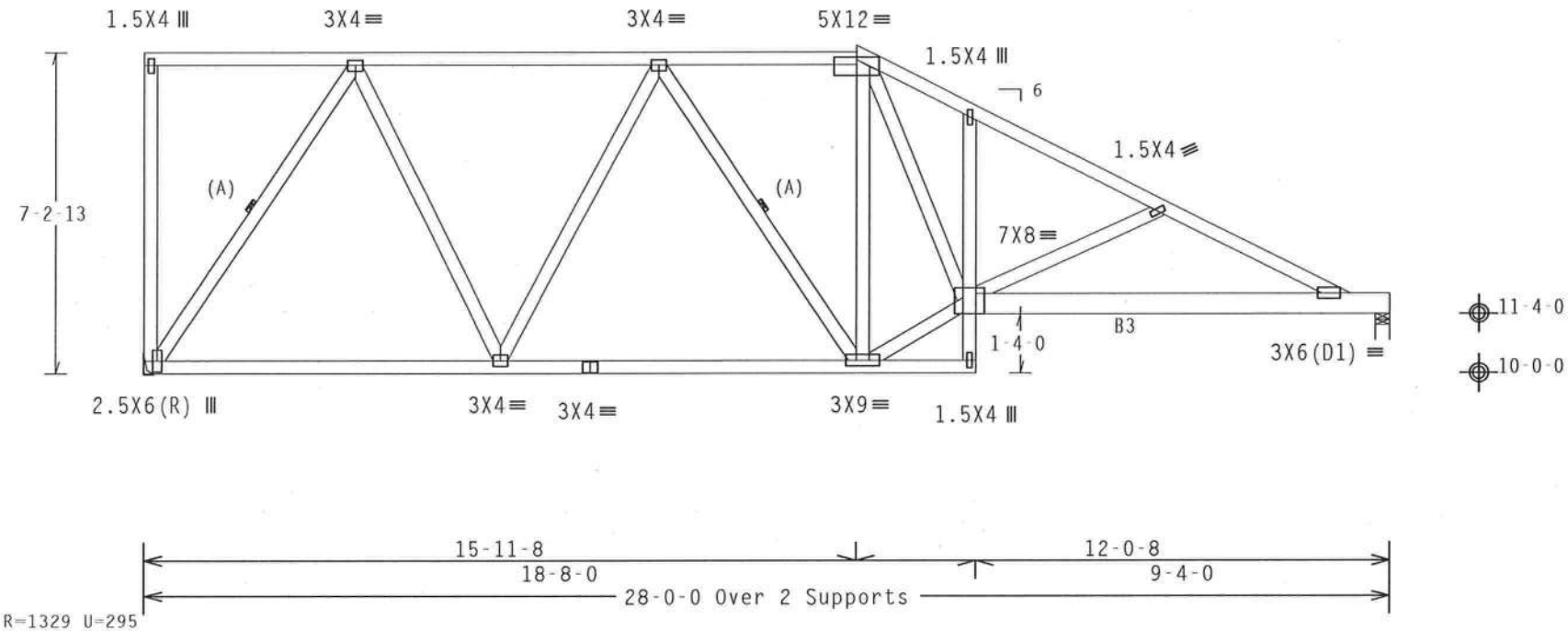

R=1329 U=295
RL=42/-125 H=Simpson HUS26
w/ (4) 10d Common, 0.148"x3.0" nails in Truss
w/ (14) 10d Common, 0.148"x3.0" nails in Girder
Girder is (2)2X6 min. So.Pine

R=1209 U=161 W=4"

Design Crit: FBC2007Res/TPI-2002(STD)

PLT TYP. Wave | FT/RT=20%(0%)/0(0) | 9.02.00.0[illegible] | QTY:1 | FL/-/4/-/-/R/- | Scale =.25"/Ft.

ALPINE
ITW Building Components Group Inc.
Haines City, FL 33844
FL COA #0 278

WARNING TRUSSES REQUIRE EXTREME CARE IN FABRICATION, HANDLING, SHIPPING, INSTALLING AND BRACING. REFER TO BCSI (BUILDING COMPONENT SAFETY INFORMATION), PUBLISHED BY TPI (TRUSS PLATE INSTITUTE, 218 NORTH LEE STREET, SUITE 312, ALEXANDRIA, VA, 22314) AND WTCA (WOOD TRUSS COUNCIL OF AMERICA, 6300 ENTERPRISE LANE, MADISON, WI 53719) FOR SAFETY PRACTICES PRIOR TO PERFORMING THESE FUNCTIONS. UNLESS OTHERWISE INDICATED TOP CHORD SHALL HAVE PROPERLY ATTACHED STRUCTURAL PANELS AND BOTTOM CHORD SHALL HAVE A PROPERLY ATTACHED RIGID CEILING.

IMPORTANT FURNISH A COPY OF THIS DESIGN TO THE INSTALLATION CONTRACTOR. ITW BCG, INC. SHALL NOT BE RESPONSIBLE FOR ANY DEVIATION FROM THIS DESIGN; ANY FAILURE TO BUILD THE TRUSS IN CONFORMANCE WITH TPI; OR FABRICATING, HANDLING, SHIPPING, INSTALLING & BRACING OF TRUSSES.
DESIGN CONFORMS WITH APPLICABLE PROVISIONS OF NDS (NATIONAL DESIGN SPEC. BY AF&PA) AND TPI. ITW BCG CONNECTOR PLATES ARE MADE OF 20/18/16GA (W,H/SS/K) ASTM A653 GRADE 40/60 (W, K/H,SS) GALV. STEEL. APPLY PLATES TO EACH FACE OF TRUSS AND, UNLESS OTHERWISE LOCATED ON THIS DESIGN, POSITION PER DRAWINGS 160A-Z. ANY INSPECTION OF PLATES FOLLOWED BY (1) SHALL BE PER ANNEX A3 OF TPI1-2002 SEC.3. A SEAL ON THIS DRAWING INDICATES ACCEPTANCE OF PROFESSIONAL ENGINEERING RESPONSIBILITY SOLELY FOR THE TRUSS COMPONENT DESIGN SHOWN. THE SUITABILITY AND USE OF THIS COMPONENT FOR ANY BUILDING IS THE RESPONSIBILITY OF THE BUILDING DESIGNER PER ANSI/TPI 1 SEC. 2.

DOUGLAS FLEMING LICENSE No. 66648 STATE OF FLORIDA PROFESSIONAL ENGINEER

TC LL	20.0 PSF	REF	R8228- 60324
TC DL	10.0 PSF	DATE	12/18/09
BC DL	10.0 PSF	DRW	HCUSR8228 09352036
BC LL	0.0 PSF	HC-ENG	JB/DF
TOT.LD.	40.0 PSF	SEQN-	72967
DUR.FAC.	1.25	FROM	AH
SPACING	24.0"	JREF-	1TXP8228Z01

(9-244--Fill in later EDGLEY -- , ** - B8)

Top chord 2x4 SP #2 Dense
Bot chord 2x4 SP #2 Dense
Webs 2x4 SP #3

Left end vertical not exposed to wind pressure.

Roof overhang supports 2.00 psf soffit load.

(A) Continuous lateral bracing equally spaced on member.

In lieu of structural panels use purlins to brace all flat TC @ 24" OC.

Bottom chord checked for 10.00 psf non-concurrent live load.

MWFRS loads based on trusses located at least 30.00 ft. from roof edge.

110 mph wind, 15.00 ft mean hgt, ASCE 7-05, CLOSED bldg, not located within 4.50 ft from roof edge, CAT II, EXP C, wind TC DL=5.0 psf, wind BC DL=5.0 psf. Iw=1.00 GCpi(+/-)=0.18

Wind reactions based on MWFRS pressures.

H = recommended connection based on manufacturer tested capacities and calculations. Conditions may exist that require different connections than indicated. Refer to manufacturer publication for additional information.

Truss passed check for 20 psf additional bottom chord live load in areas with 42"-high x 24"-wide clearance.

Deflection meets L/240 live and L/180 total load.

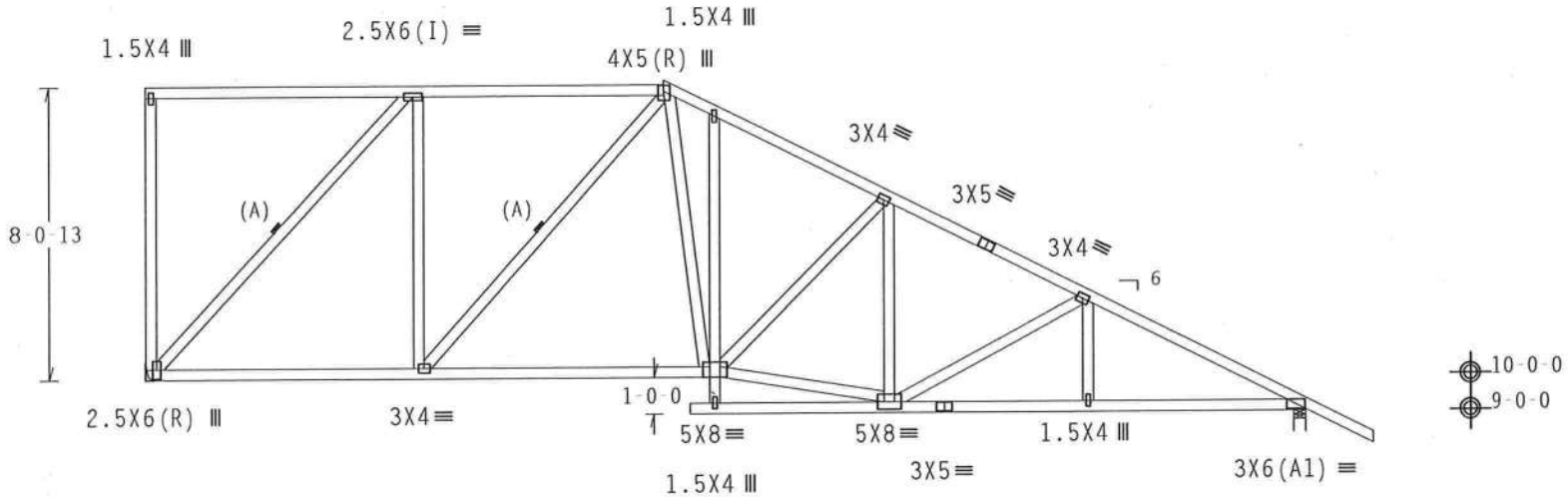

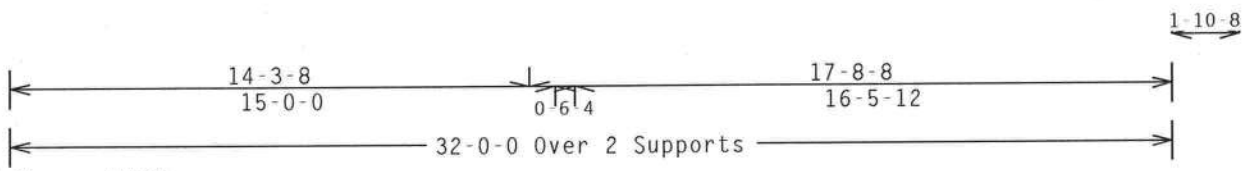

R=1518 U=313
RL=108/-222 H=Simpson HUS26
w/ (4) 10d Common, 0.148"x3.0" nails in Truss
w/ (14) 10d Common, 0.148"x3.0" nails in Girder
Girder is (2)2X6 min. So.Pine

R=1541 U=195 W=4"

Design Crit: FBC2007Res/TPI-2002(STD)

PLT TYP. Wave | FT/RT=20%(0%)/0(0) | 9.02.00 | QTY:1 | FL/-/4/-/-/R/- | Scale =.1875"/Ft.

ALPINE
ITW Building Components Group Inc.
Haines City, FL 33844
FL COA #0 278

WARNING TRUSSES REQUIRE EXTREME CARE IN FABRICATION, HANDLING, SHIPPING, INSTALLING AND BRACING. REFER TO BCSI (BUILDING COMPONENT SAFETY INFORMATION), PUBLISHED BY TPI (TRUSS PLATE INSTITUTE, 218 NORTH LEE STREET, SUITE 312, ALEXANDRIA, VA, 22314) AND WTCA (WOOD TRUSS COUNCIL OF AMERICA, 6300 ENTERPRISE LANE, MADISON, WI 53719) FOR SAFETY PRACTICES PRIOR TO PERFORMING THESE FUNCTIONS. UNLESS OTHERWISE INDICATED TOP CHORD SHALL HAVE PROPERLY ATTACHED STRUCTURAL PANELS AND BOTTOM CHORD SHALL HAVE A PROPERLY ATTACHED RIGID CEILING.

IMPORTANTFURNISH A COPY OF THIS DESIGN TO THE INSTALLATION CONTRACTOR. ITW BCG, INC. SHALL NOT BE RESPONSIBLE FOR ANY DEVIATION FROM THIS DESIGN; ANY FAILURE TO BUILD THE TRUSS IN CONFORMANCE WITH TPI; OR FABRICATING, HANDLING, SHIPPING, INSTALLING & BRACING OF TRUSSES. DESIGN CONFORMS WITH APPLICABLE PROVISIONS OF NDS (NATIONAL DESIGN SPEC, BY AF&PA) AND TPI. ITW BCG CONNECTOR PLATES ARE MADE OF 20/18/16GA (W,H/SS/K) ASTM A653 GRADE 40/60 (W, K/H,SS) GALV. STEEL. APPLY PLATES TO EACH FACE OF TRUSS AND, UNLESS OTHERWISE LOCATED ON THIS DESIGN, POSITION PER DRAWINGS 160A-Z. ANY INSPECTION OF PLATES FOLLOWED BY (1) SHALL BE PER ANNEX A3 OF TPI1-2002 SEC.3. A SEAL ON THIS DRAWING INDICATES ACCEPTANCE OF PROFESSIONAL ENGINEERING RESPONSIBILITY SOLELY FOR THE TRUSS COMPONENT DESIGN SHOWN. THE SUITABILITY AND USE OF THIS COMPONENT FOR ANY BUILDING IS THE RESPONSIBILITY OF THE BUILDING DESIGNER PER ANSI/TPI 1 SEC. 2.

DOUGLAS FLEMING LICENSE No. 66648 STATE OF FLORIDA PROFESSIONAL ENGINEER
DEC 18 '09

TC LL	20.0 PSF	REF	R8228- 60325
TC DL	10.0 PSF	DATE	12/18/09
BC DL	10.0 PSF	DRW	HCUSR8228 09352037
BC LL	0.0 PSF	HC-ENG	JB/DF
TOT.LD.	40.0 PSF	SEQN-	72972
DUR.FAC.	1.25	FROM	AH
SPACING	24.0"	JREF-	1TXP8228Z01

(9-244--Fill in later EDGLEY -- , ** - H7C)

Top chord 2x4 SP #2 Dense
Bot chord 2x4 SP #2 Dense
Webs 2x4 SP #3

Roof overhang supports 2.00 psf soffit load.

In lieu of structural panels use purlins to brace all flat TC @ 24" OC.

Deflection meets L/240 live and L/180 total load.

110 mph wind, 15.00 ft mean hgt, ASCE 7-05, CLOSED bldg, not located within 4.50 ft from roof edge, CAT II, EXP C, wind TC DL=5.0 psf, wind BC DL=5.0 psf. Iw=1.00 GCpi(+/-)=0.18

Wind reactions based on MWFRS pressures.

#1 hip supports 7-0-0 jacks with no webs.

Left side jacks have 7-0-0 setback with 0-0-0 cant and 1-10-8 overhang. End jacks have 7-0-0 setback with 0-0-0 cant and 1-10-8 overhang. Right side jacks have 7-0-0 setback with 0-0-0 cant and 1-10-8 overhang.

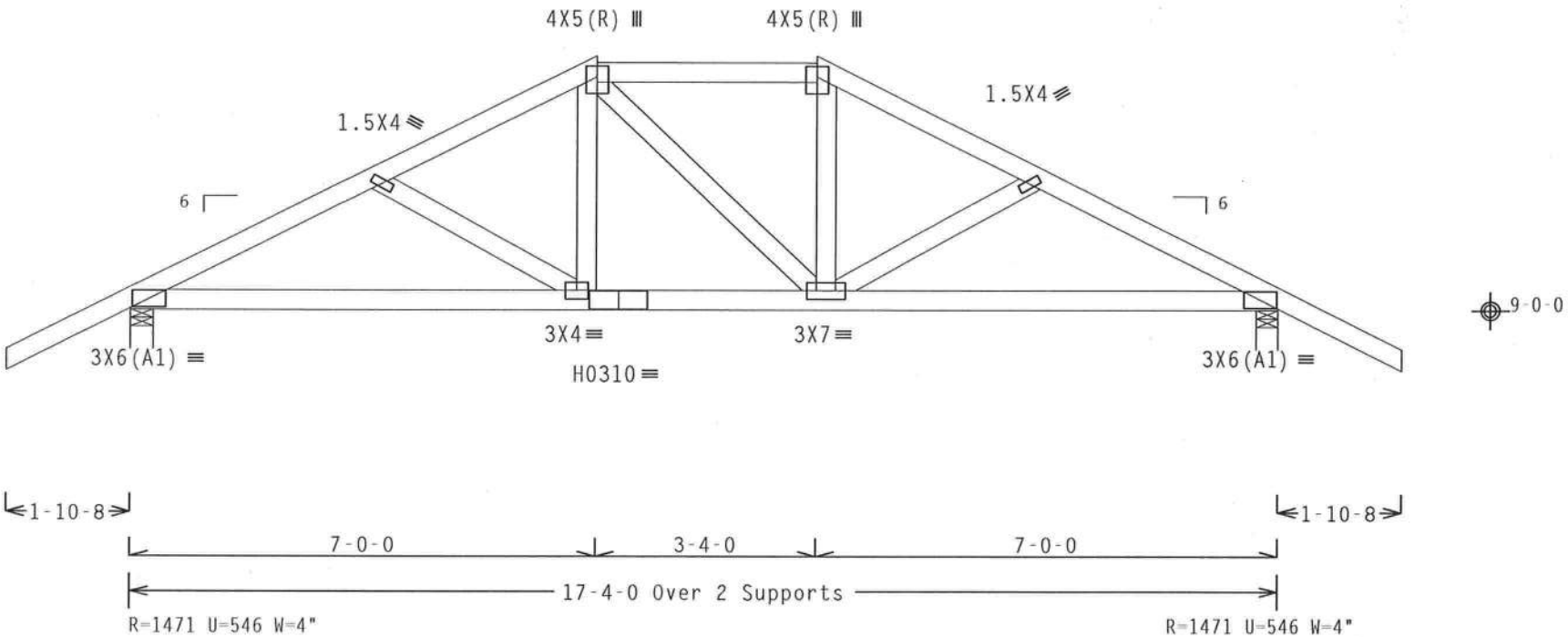

Design Crit: FBC2007Res/TPI-2002(STD)

PLT TYP. 20 Gauge HS,Wave FT/RT=20%(0%)/0(0) 9.02.00 QTY:1 FL/-/4/-/-/R/- Scale =.375"/Ft.

ALPINE
ITW Building Components Group Inc.
Haines City, FL 33844
FL COA #0 278

WARNING TRUSSES REQUIRE EXTREME CARE IN FABRICATION, HANDLING, SHIPPING, INSTALLING AND BRACING. REFER TO BCSI (BUILDING COMPONENT SAFETY INFORMATION), PUBLISHED BY TPI (TRUSS PLATE INSTITUTE, 218 NORTH LEE STREET, SUITE 312, ALEXANDRIA, VA, 22314) AND WTCA (WOOD TRUSS COUNCIL OF AMERICA, 6300 ENTERPRISE LANE, MADISON, WI 53719) FOR SAFETY PRACTICES PRIOR TO PERFORMING THESE FUNCTIONS. UNLESS OTHERWISE INDICATED TOP CHORD SHALL HAVE PROPERLY ATTACHED STRUCTURAL PANELS AND BOTTOM CHORD SHALL HAVE A PROPERLY ATTACHED RIGID CEILING.

IMPORTANTFURNISH A COPY OF THIS DESIGN TO THE INSTALLATION CONTRACTOR. ITW BCG, INC. SHALL NOT BE RESPONSIBLE FOR ANY DEVIATION FROM THIS DESIGN; ANY FAILURE TO BUILD THE TRUSS IN CONFORMANCE WITH TPI; OR FABRICATING, HANDLING, SHIPPING, INSTALLING & BRACING OF TRUSSES.
DESIGN CONFORMS WITH APPLICABLE PROVISIONS OF NDS (NATIONAL DESIGN SPEC, BY AF&PA) AND TPI. ITW BCG CONNECTOR PLATES ARE MADE OF 20/18/16GA (W,H/SS/K) ASTM A653 GRADE 40/60 (W, K/H,SS) GALV. STEEL. APPLY PLATES TO EACH FACE OF TRUSS AND, UNLESS OTHERWISE LOCATED ON THIS DESIGN, POSITION PER DRAWINGS 160A-Z. ANY INSPECTION OF PLATES FOLLOWED BY (1) SHALL BE PER ANNEX A3 OF TPI1-2002 SEC.3. A SEAL ON THIS DRAWING INDICATES ACCEPTANCE OF PROFESSIONAL ENGINEERING RESPONSIBILITY SOLELY FOR THE TRUSS COMPONENT DESIGN SHOWN. THE SUITABILITY AND USE OF THIS COMPONENT FOR ANY BUILDING IS THE RESPONSIBILITY OF THE BUILDING DESIGNER PER ANSI/TPI 1 SEC. 2.

DOUGLAS FLEMING LICENSE No. 66648 STATE OF FLORIDA PROFESSIONAL ENGINEER
12/18 '09

TC LL	20.0 PSF	REF R8228- 60326
TC DL	10.0 PSF	DATE 12/18/09
BC DL	10.0 PSF	DRW HCUSR8228 09352064
BC LL	0.0 PSF	HC-ENG JB/DF
TOT.LD.	40.0 PSF	SEQN- 68140
DUR.FAC.	1.25	FROM AH
SPACING	24.0"	JREF- 1TXP8228Z01

(9-244--Fill in later EDGLEY -- , ** - C)

Top chord 2x4 SP #2 Dense
Bot chord 2x4 SP #2 Dense
Webs 2x4 SP #3

Roof overhang supports 2.00 psf soffit load.

Bottom chord checked for 10.00 psf non-concurrent live load.

MWFRS loads based on trusses located at least 7.50 ft. from roof edge.

110 mph wind, 15.00 ft mean hgt, ASCE 7-05, CLOSED bldg, not located within 4.50 ft from roof edge, CAT II, EXP C, wind TC DL=5.0 psf, wind BC DL=5.0 psf. Iw=1.00 GCpi(+/-)=0.18

Wind reactions based on MWFRS pressures.

Deflection meets L/240 live and L/180 total load.

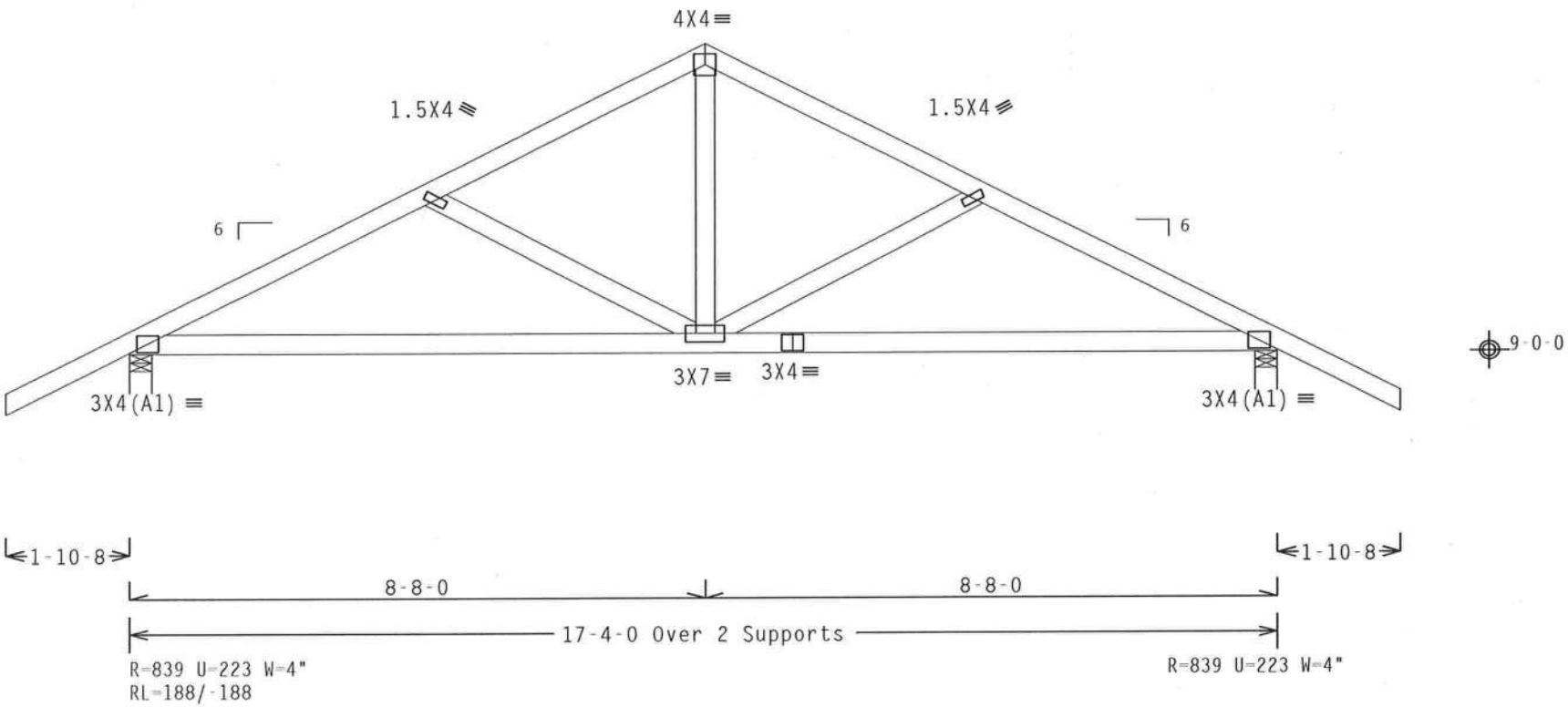

Design Crit: FBC2007Res/TPI-2002(STD)

PLT TYP. Wave | FT/RT=20%(0%)/0(0) | 9.02.00.00.10.16 | QTY:3 | FL/-/4/-/-/R/- | Scale =.375"/Ft.

ALPINE
ITW Building Components Group Inc.
Haines City, FL 33844
FL COA #0278

WARNING TRUSSES REQUIRE EXTREME CARE IN FABRICATION, HANDLING, SHIPPING, INSTALLING AND BRACING. REFER TO BCSI (BUILDING COMPONENT SAFETY INFORMATION), PUBLISHED BY TPI (TRUSS PLATE INSTITUTE, 218 NORTH LEE STREET, SUITE 312, ALEXANDRIA, VA. 22314) AND WTCA (WOOD TRUSS COUNCIL OF AMERICA, 6300 ENTERPRISE LANE, MADISON, WI 53719) FOR SAFETY PRACTICES PRIOR TO PERFORMING THESE FUNCTIONS. UNLESS OTHERWISE INDICATED TOP CHORD SHALL HAVE PROPERLY ATTACHED STRUCTURAL PANELS AND BOTTOM CHORD SHALL HAVE A PROPERLY ATTACHED RIGID CEILING.

IMPORTANTFURNISH A COPY OF THIS DESIGN TO THE INSTALLATION CONTRACTOR. ITW BCG, INC. SHALL NOT BE RESPONSIBLE FOR ANY DEVIATION FROM THIS DESIGN; ANY FAILURE TO BUILD THE TRUSS IN CONFORMANCE WITH TPI; OR FABRICATING, HANDLING, SHIPPING, INSTALLING & BRACING OF TRUSSES.
DESIGN CONFORMS WITH APPLICABLE PROVISIONS OF NDS (NATIONAL DESIGN SPEC, BY AF&PA) AND TPI. ITW BCG CONNECTOR PLATES ARE MADE OF 20/18/16GA (W.H/SS/K) ASTM A653 GRADE 40/60 (W. K/H.SS) GALV. STEEL. APPLY PLATES TO EACH FACE OF TRUSS AND, UNLESS OTHERWISE LOCATED ON THIS DESIGN, POSITION PER DRAWINGS 160A-Z. ANY INSPECTION OF PLATES FOLLOWED BY (I) SHALL BE PER ANNEX A3 OF TPI1-2002 SEC.3. A SEAL ON THIS DRAWING INDICATES ACCEPTANCE OF PROFESSIONAL ENGINEERING RESPONSIBILITY SOLELY FOR THE TRUSS COMPONENT DESIGN SHOWN. THE SUITABILITY AND USE OF THIS COMPONENT FOR ANY BUILDING IS THE RESPONSIBILITY OF THE BUILDING DESIGNER PER ANSI/TPI 1 SEC. 2.

DOUGLAS FLEMING LICENSE No. 66648 STATE OF FLORIDA PROFESSIONAL ENGINEER

DEC 18 '09

TC LL	20.0 PSF	REF	R8228- 60327
TC DL	10.0 PSF	DATE	12/18/09
BC DL	10.0 PSF	DRW	HCUSR8228 09352015
BC LL	0.0 PSF	HC-ENG	JB/DF *
TOT.LD.	40.0 PSF	SEQN-	68145
DUR.FAC.	1.25	FROM	AH
SPACING	24.0"	JREF-	1TXP8228Z01

(9-244--Fill in later EDGLEY -- , ** - C1)

Top chord 2x4 SP #2 Dense
Bot chord 2x4 SP #2 Dense
Webs 2x4 SP #3

H = recommended connection based on manufacturer tested capacities and calculations. Conditions may exist that require different connections than indicated. Refer to manufacturer publication for additional information.

Bottom chord checked for 10.00 psf non-concurrent live load.

MWFRS loads based on trusses located at least 15.00 ft. from roof edge.

110 mph wind, 15.00 ft mean hgt, ASCE 7-05, CLOSED bldg, not located within 4.50 ft from roof edge, CAT II, EXP C, wind TC DL=5.0 psf, wind BC DL=5.0 psf. Iw=1.00 GCpi(+/-)=0.18

Wind reactions based on MWFRS pressures.

In lieu of structural panels use purlins to brace all flat TC @ 24" OC.

Deflection meets L/240 live and L/180 total load.

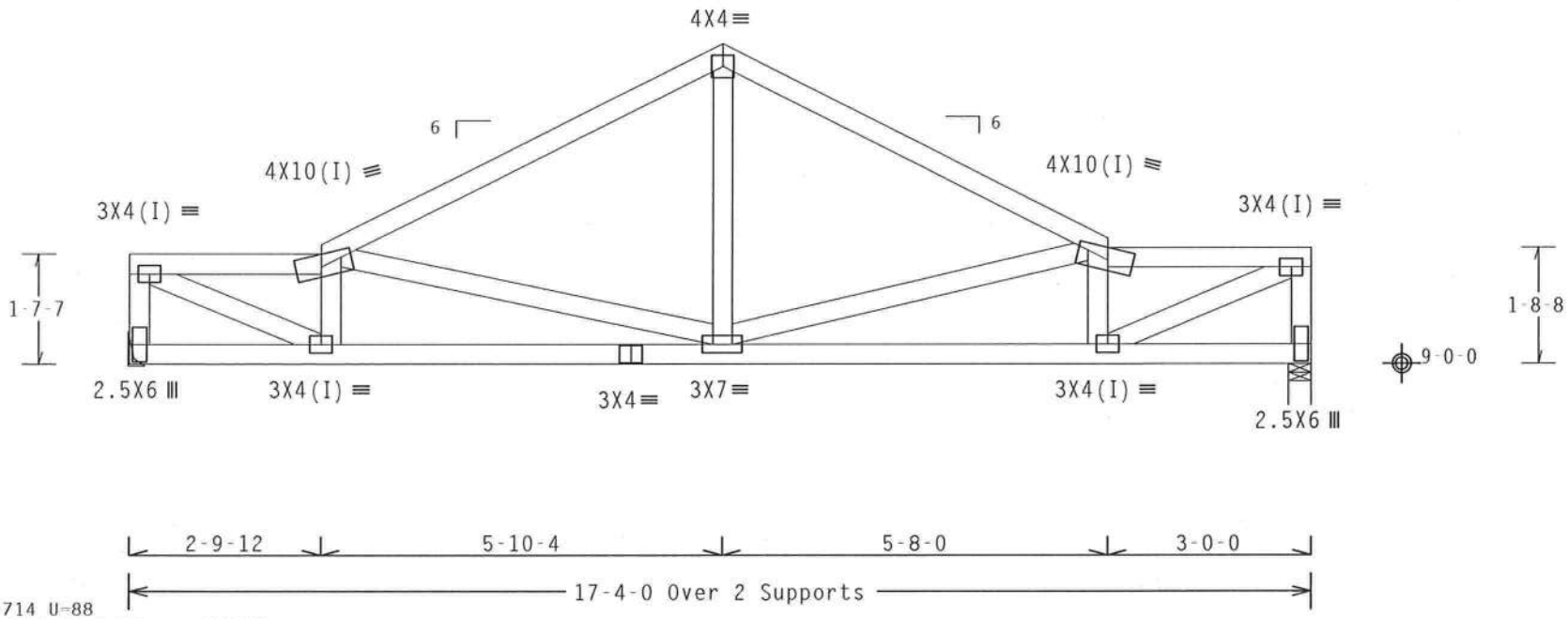

R=714 U=88
RL=87/-86 H=Simpson LUS24
w/ (2) 10d Common, 0.148"x3.0" nails in Truss
w/ (4) 10d, 0.148"x1.5" nails in Girder
Girder is (1)2X0 min. So.Pine

R=714 U=89 W=4"

Design Crit: FBC2007Res/TPI-2002(STD)

PLT TYP. Wave | FT/RT=20%(0%)/0(0) | 9.02.00 | QTY:1 | FL/-/4/-/-/R/- | Scale =.375"/Ft.

ALPINE
ITW Building Components Group Inc.
Haines City, FL 33844
FL COA #0278

WARNING TRUSSES REQUIRE EXTREME CARE IN FABRICATION, HANDLING, SHIPPING, INSTALLING AND BRACING. REFER TO BCSI (BUILDING COMPONENT SAFETY INFORMATION), PUBLISHED BY TPI (TRUSS PLATE INSTITUTE, 218 NORTH LEE STREET, SUITE 312, ALEXANDRIA, VA, 22314) AND WTCA (WOOD TRUSS COUNCIL OF AMERICA, 6300 ENTERPRISE LANE, MADISON, WI 53719) FOR SAFETY PRACTICES PRIOR TO PERFORMING THESE FUNCTIONS. UNLESS OTHERWISE INDICATED TOP CHORD SHALL HAVE PROPERLY ATTACHED STRUCTURAL PANELS AND BOTTOM CHORD SHALL HAVE A PROPERLY ATTACHED RIGID CEILING.

IMPORTANTFURNISH A COPY OF THIS DESIGN TO THE INSTALLATION CONTRACTOR. ITW BCG, INC. SHALL NOT BE RESPONSIBLE FOR ANY DEVIATION FROM THIS DESIGN; ANY FAILURE TO BUILD THE TRUSS IN CONFORMANCE WITH TPI; OR FABRICATING, HANDLING, SHIPPING, INSTALLING & BRACING OF TRUSSES. DESIGN CONFORMS WITH APPLICABLE PROVISIONS OF NDS (NATIONAL DESIGN SPEC. BY AF&PA) AND TPI. ITW BCG CONNECTOR PLATES ARE MADE OF 20/18/16GA (W,H/SS/K) ASTM A653 GRADE 40/60 (W, K/H,SS) GALV. STEEL. APPLY PLATES TO EACH FACE OF TRUSS AND, UNLESS OTHERWISE LOCATED ON THIS DESIGN, POSITION PER DRAWINGS 160A-Z. ANY INSPECTION OF PLATES FOLLOWED BY (1) SHALL BE PER ANNEX A3 OF TPI1-2002 SEC.3. A SEAL ON THIS DRAWING INDICATES ACCEPTANCE OF PROFESSIONAL ENGINEERING RESPONSIBILITY SOLELY FOR THE TRUSS COMPONENT DESIGN SHOWN. THE SUITABILITY AND USE OF THIS COMPONENT FOR ANY BUILDING IS THE RESPONSIBILITY OF THE BUILDING DESIGNER PER ANSI/TPI 1 SEC. 2.

DOUGLAS FLEMING LICENSE No. 66648 STATE OF FLORIDA PROFESSIONAL ENGINEER
12/18 '09

TC LL	20.0 PSF	REF R8228- 60328
TC DL	10.0 PSF	DATE 12/18/09
BC DL	10.0 PSF	DRW HCUSR8228 09352038
BC LL	0.0 PSF	HC-ENG JB/DF
TOT.LD.	40.0 PSF	SEQN- 73035
DUR.FAC.	1.25	
SPACING	24.0"	JREF- 1TXP8228Z01

(9-244--Fill in later EDGLEY -- , ** - C2)

Top chord 2x4 SP #2 Dense
Bot chord 2x4 SP #2 Dense
Webs 2x4 SP #3

End verticals not exposed to wind pressure.

H = recommended connection based on manufacturer tested capacities and calculations. Conditions may exist that require different connections than indicated. Refer to manufacturer publication for additional information.

Deflection meets L/240 live and L/180 total load.

110 mph wind, 15.00 ft mean hgt, ASCE 7-05, CLOSED bldg, not located within 4.50 ft from roof edge, CAT II, EXP C, wind TC DL=5.0 psf, wind BC DL=5.0 psf. Iw=1.00 GCpi(+/-)=0.18

Wind reactions based on MWFRS pressures.

In lieu of structural panels use purlins to brace all flat TC @ 24" OC.

Bottom chord checked for 10.00 psf non-concurrent live load.

MWFRS loads based on trusses located at least 15.00 ft. from roof edge.

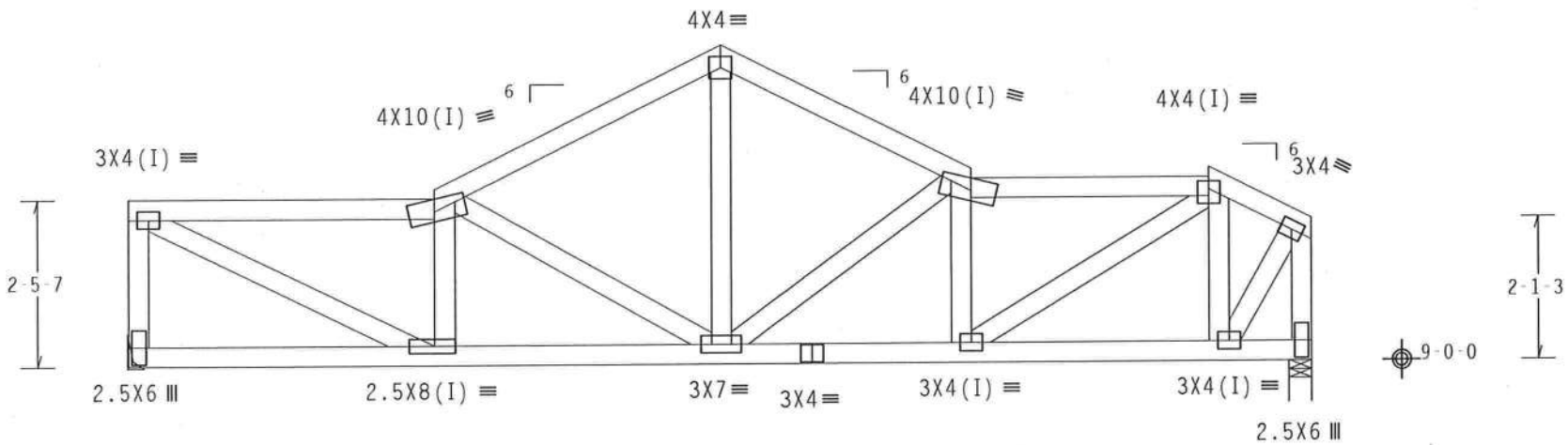

R=714 U=116
RL=66/-73 H=Simpson LUS24
w/ (2) 10d Common, 0.148"x3.0" nails in Truss
w/ (4) 10d, 0.148"x1.5" nails in Girder
Girder is (1)2X0 min. So.Pine

R=714 U=97 W=4"

Design Crit: FBC2007Res/TPI-2002(STD)

PLT TYP. Wave | FT/RT=20%(0%)/0(0) | 9.02.00 | QTY:1 | FL/-/4/-/-/R/- | Scale =.375"/Ft.

ALPINE
ITW Building Components Group Inc.
Haines City, FL 33844
FL COA #0 278

WARNING TRUSSES REQUIRE EXTREME CARE IN FABRICATION, HANDLING, SHIPPING, INSTALLING AND BRACING. REFER TO BCSI (BUILDING COMPONENT SAFETY INFORMATION), PUBLISHED BY TPI (TRUSS PLATE INSTITUTE, 218 NORTH LEE STREET, SUITE 312, ALEXANDRIA, VA, 22314) AND WTCA (WOOD TRUSS COUNCIL OF AMERICA, 6300 ENTERPRISE LANE, MADISON, WI 53719) FOR SAFETY PRACTICES PRIOR TO PERFORMING THESE FUNCTIONS. UNLESS OTHERWISE INDICATED TOP CHORD SHALL HAVE PROPERLY ATTACHED STRUCTURAL PANELS AND BOTTOM CHORD SHALL HAVE A PROPERLY ATTACHED RIGID CEILING.

IMPORTANT FURNISH A COPY OF THIS DESIGN TO THE INSTALLATION CONTRACTOR. ITW BCG, INC. SHALL NOT BE RESPONSIBLE FOR ANY DEVIATION FROM THIS DESIGN; ANY FAILURE TO BUILD THE TRUSS IN CONFORMANCE WITH TPI; OR FABRICATING, HANDLING, SHIPPING, INSTALLING & BRACING OF TRUSSES. DESIGN CONFORMS WITH APPLICABLE PROVISIONS OF NDS (NATIONAL DESIGN SPEC, BY AF&PA) AND TPI. ITW BCG CONNECTOR PLATES ARE MADE OF 20/18/16GA (W,H/SS/K) ASTM A653 GRADE 40/60 (W, K/H,SS) GALV. STEEL. APPLY PLATES TO EACH FACE OF TRUSS AND, UNLESS OTHERWISE LOCATED ON THIS DESIGN, POSITION PER DRAWINGS 160A-Z. ANY INSPECTION OF PLATES FOLLOWED BY (1) SHALL BE PER ANNEX A3 OF TPI1-2002 SEC.3. A SEAL ON THIS DRAWING INDICATES ACCEPTANCE OF PROFESSIONAL ENGINEERING RESPONSIBILITY SOLELY FOR THE TRUSS COMPONENT DESIGN SHOWN. THE SUITABILITY AND USE OF THIS COMPONENT FOR ANY BUILDING IS THE RESPONSIBILITY OF THE BUILDING DESIGNER PER ANSI/TPI 1 SEC. 2.

DOUGLAS FLEMING LICENSE No. 66648 STATE OF FLORIDA PROFESSIONAL ENGINEER
DEC 18 '09

TC LL	20.0 PSF	REF R8228- 60329
TC DL	10.0 PSF	DATE 12/18/09
BC DL	10.0 PSF	DRW HCUSR8228 09352039
BC LL	0.0 PSF	HC-ENG JB/DF
TOT.LD.	40.0 PSF	SEQN- 73030
DUR.FAC.	1.25	
SPACING	24.0"	JREF- 1TXP8228Z01

(9-244--Fill in later EDGLEY -- , ** - C3)

Top chord 2x4 SP #2 Dense
Bot chord 2x4 SP #2 Dense
Webs 2x4 SP #3

End verticals not exposed to wind pressure.

H = recommended connection based on manufacturer tested capacities and calculations. Conditions may exist that require different connections than indicated. Refer to manufacturer publication for additional information.

Deflection meets L/240 live and L/180 total load.

110 mph wind, 15.00 ft mean hgt, ASCE 7-05, CLOSED bldg, not located within 4.50 ft from roof edge, CAT II, EXP C, wind TC DL=5.0 psf, wind BC DL=5.0 psf. Iw=1.00 GCpi(+/-)=0.18

Wind reactions based on MWFRS pressures.

In lieu of structural panels use purlins to brace all flat TC @ 24" OC.

Bottom chord checked for 10.00 psf non-concurrent live load.

MWFRS loads based on trusses located at least 15.00 ft. from roof edge.

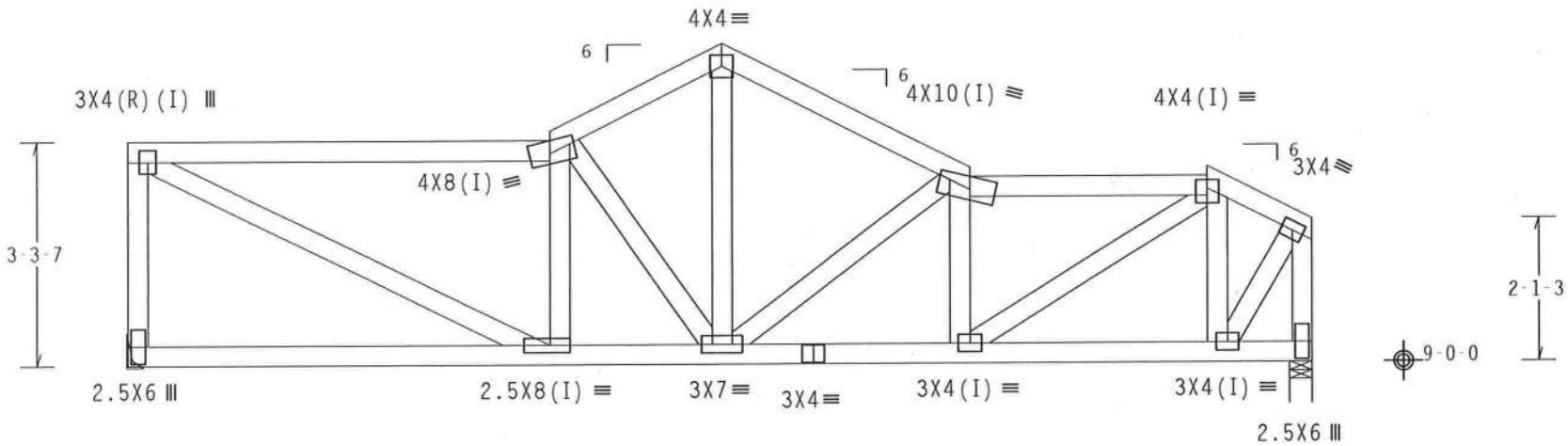

R=714 U=158
RL=-66 H=Simpson LUS24
w/ (2) 10d Common, 0.148"x3.0" nails in Truss
w/ (4) 10d, 0.148"x1.5" nails in Girder
Girder is (1)2X0 min. So.Pine

R=714 U=125 W=4"

Design Crit: FBC2007Res/TPI-2002(STD)

PLT TYP. Wave | FT/RT=20%(0%)/0(0) | 9.02.00 [illegible] | QTY:1 | FL/-/4/-/-/R/- | Scale =.375"/Ft.

ALPINE
ITW Building Components Group Inc.
Haines City, FL 33844
FL COA #0278

WARNING TRUSSES REQUIRE EXTREME CARE IN FABRICATION, HANDLING, SHIPPING, INSTALLING AND BRACING. REFER TO BCSI (BUILDING COMPONENT SAFETY INFORMATION), PUBLISHED BY TPI (TRUSS PLATE INSTITUTE, 218 NORTH LEE STREET, SUITE 312, ALEXANDRIA, VA, 22314) AND WTCA (WOOD TRUSS COUNCIL OF AMERICA, 6300 ENTERPRISE LANE, MADISON, WI 53719) FOR SAFETY PRACTICES PRIOR TO PERFORMING THESE FUNCTIONS. UNLESS OTHERWISE INDICATED TOP CHORD SHALL HAVE PROPERLY ATTACHED STRUCTURAL PANELS AND BOTTOM CHORD SHALL HAVE A PROPERLY ATTACHED RIGID CEILING.

IMPORTANTFURNISH A COPY OF THIS DESIGN TO THE INSTALLATION CONTRACTOR. ITW BCG, INC. SHALL NOT BE RESPONSIBLE FOR ANY DEVIATION FROM THIS DESIGN; ANY FAILURE TO BUILD THE TRUSS IN CONFORMANCE WITH TPI; OR FABRICATING, HANDLING, SHIPPING, INSTALLING & BRACING OF TRUSSES. DESIGN CONFORMS WITH APPLICABLE PROVISIONS OF NDS (NATIONAL DESIGN SPEC. BY AF&PA) AND TPI. ITW BCG CONNECTOR PLATES ARE MADE OF 20/18/16GA (W,H/SS/K) ASTM A653 GRADE 40/60 (W, K/H,SS) GALV. STEEL. APPLY PLATES TO EACH FACE OF TRUSS AND, UNLESS OTHERWISE LOCATED ON THIS DESIGN, POSITION PER DRAWINGS 160A-Z. ANY INSPECTION OF PLATES FOLLOWED BY (1) SHALL BE PER ANNEX A3 OF TPI1-2002 SEC.3. A SEAL ON THIS DRAWING INDICATES ACCEPTANCE OF PROFESSIONAL ENGINEERING RESPONSIBILITY SOLELY FOR THE TRUSS COMPONENT DESIGN SHOWN. THE SUITABILITY AND USE OF THIS COMPONENT FOR ANY BUILDING IS THE RESPONSIBILITY OF THE BUILDING DESIGNER PER ANSI/TPI 1 SEC. 2.

DOUGLAS FLEMING LICENSE No. 66648 STATE OF FLORIDA PROFESSIONAL ENGINEER

[illegible] 18 '09

TC LL	20.0 PSF	REF R8228- 60330
TC DL	10.0 PSF	DATE 12/18/09
BC DL	10.0 PSF	DRW HCUSR8228 09352040
BC LL	0.0 PSF	HC-ENG JB/DF
TOT.LD.	40.0 PSF	SEQN- 73025
DUR.FAC.	1.25	
SPACING	24.0"	JREF- 1TXP8228Z01

(9-244--Fill in later EDGLEY -- , ** - H7D)

Top chord 2x4 SP #2 Dense
Bot chord 2x4 SP #2 Dense
Webs 2x4 SP #3

Roof overhang supports 2.00 psf soffit load.

In lieu of structural panels use purlins to brace all flat TC @ 24" OC.

Deflection meets L/240 live and L/180 total load.

110 mph wind, 15.00 ft mean hgt, ASCE 7-05, CLOSED bldg, not located within 4.50 ft from roof edge, CAT II, EXP C, wind TC DL=5.0 psf, wind BC DL=5.0 psf. Iw=1.00 GCpi(+/-)=0.18

Wind reactions based on MWFRS pressures.

#1 hip supports 7-0-0 jacks with no webs.

Left side jacks have 7-0-0 setback with 0-0-0 cant and 1-10-8 overhang. End jacks have 7-0-0 setback with 0-0-0 cant and 1-10-8 overhang. Right side jacks have 7-0-0 setback with 0-0-0 cant and 1-10-8 overhang.

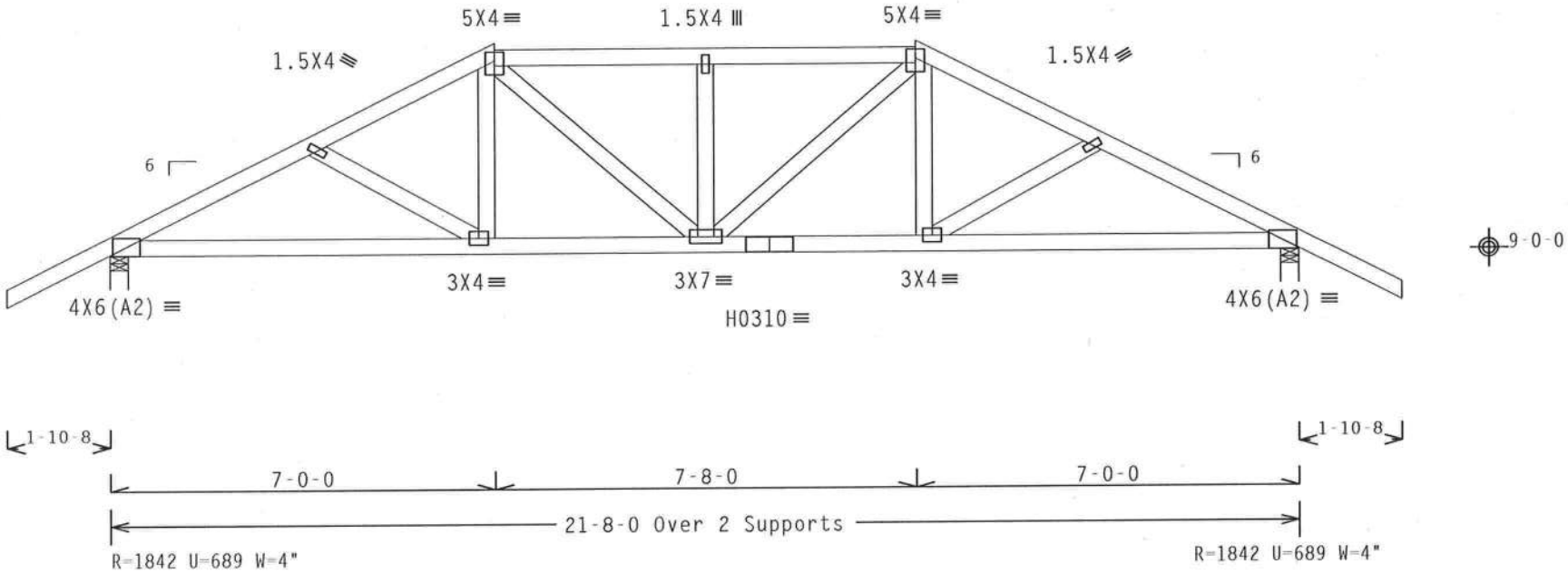

Design Crit: FBC2007Res/TPI-2002(STD)

PLT TYP. 20 Gauge HS,Wave FT/RT=20%(0%)/0(0) 9.02.00 QTY:1 FL/-/4/-/-/R/- Scale =.3125"/Ft.

ALPINE
ITW Building Components Group Inc.
Haines City, FL 33844
FL COA #0 278

WARNING TRUSSES REQUIRE EXTREME CARE IN FABRICATION, HANDLING, SHIPPING, INSTALLING AND BRACING. REFER TO BCSI (BUILDING COMPONENT SAFETY INFORMATION), PUBLISHED BY TPI (TRUSS PLATE INSTITUTE, 218 NORTH LEE STREET, SUITE 312, ALEXANDRIA, VA, 22314) AND WTCA (WOOD TRUSS COUNCIL OF AMERICA, 6300 ENTERPRISE LANE, MADISON, WI 53719) FOR SAFETY PRACTICES PRIOR TO PERFORMING THESE FUNCTIONS. UNLESS OTHERWISE INDICATED TOP CHORD SHALL HAVE PROPERLY ATTACHED STRUCTURAL PANELS AND BOTTOM CHORD SHALL HAVE A PROPERLY ATTACHED RIGID CEILING.

IMPORTANT FURNISH A COPY OF THIS DESIGN TO THE INSTALLATION CONTRACTOR. ITW BCG, INC. SHALL NOT BE RESPONSIBLE FOR ANY DEVIATION FROM THIS DESIGN; ANY FAILURE TO BUILD THE TRUSS IN CONFORMANCE WITH TPI; OR FABRICATING, HANDLING, SHIPPING, INSTALLING & BRACING OF TRUSSES. DESIGN CONFORMS WITH APPLICABLE PROVISIONS OF NDS (NATIONAL DESIGN SPEC. BY AF&PA) AND TPI. ITW BCG CONNECTOR PLATES ARE MADE OF 20/18/16GA (W,H/SS/K) ASTM A653 GRADE 40/60 (W, K/H,SS) GALV. STEEL. APPLY PLATES TO EACH FACE OF TRUSS AND, UNLESS OTHERWISE LOCATED ON THIS DESIGN, POSITION PER DRAWINGS 160A-Z. ANY INSPECTION OF PLATES FOLLOWED BY (1) SHALL BE PER ANNEX A3 OF TPI1-2002 SEC.3. A SEAL ON THIS DRAWING INDICATES ACCEPTANCE OF PROFESSIONAL ENGINEERING RESPONSIBILITY SOLELY FOR THE TRUSS COMPONENT DESIGN SHOWN. THE SUITABILITY AND USE OF THIS COMPONENT FOR ANY BUILDING IS THE RESPONSIBILITY OF THE BUILDING DESIGNER PER ANSI/TPI 1 SEC. 2.

DOUGLAS FLEMING LICENSE No. 66648 STATE OF FLORIDA PROFESSIONAL ENGINEER

DEC 18 '09

TC LL	20.0 PSF	REF R8228- 60331
TC DL	10.0 PSF	DATE 12/18/09
BC DL	10.0 PSF	DRW HCUSR8228 09352065
BC LL	0.0 PSF	HC-ENG JB/DF
TOT.LD.	40.0 PSF	SEQN- 68178
DUR.FAC.	1.25	FROM AH
SPACING	24.0"	JREF- 1TXP8228Z01

(9-244--Fill in later EDGLEY -- , ** - HM7D)

Top chord 2x4 SP #2 Dense :T2 2x6 SP #2:
Bot chord 2x6 SP #2
Webs 2x4 SP #3

Roof overhang supports 2.00 psf soffit load.

H = recommended connection based on manufacturer tested capacities and calculations. Conditions may exist that require different connections than indicated. Refer to manufacturer publication for additional information.

In lieu of structural panels use purlins to brace all flat TC @ 24" OC.

110 mph wind, 15.00 ft mean hgt, ASCE 7-05, CLOSED bldg, not located within 4.50 ft from roof edge, CAT II, EXP C, wind TC DL=5.0 psf, wind BC DL=5.0 psf. Iw=1.00 GCpi(+/-)=0.18

Wind reactions based on MWFRS pressures.

Right end vertical not exposed to wind pressure.

(A) 2x8 #3 or better "T" brace. 80% length of web member. Attach with 16d Box or Gun (0.135"x3.5",min.)nails @ 6" OC.

#1 hip supports 7-0-0 jacks with no webs.

Deflection meets L/240 live and L/180 total load.

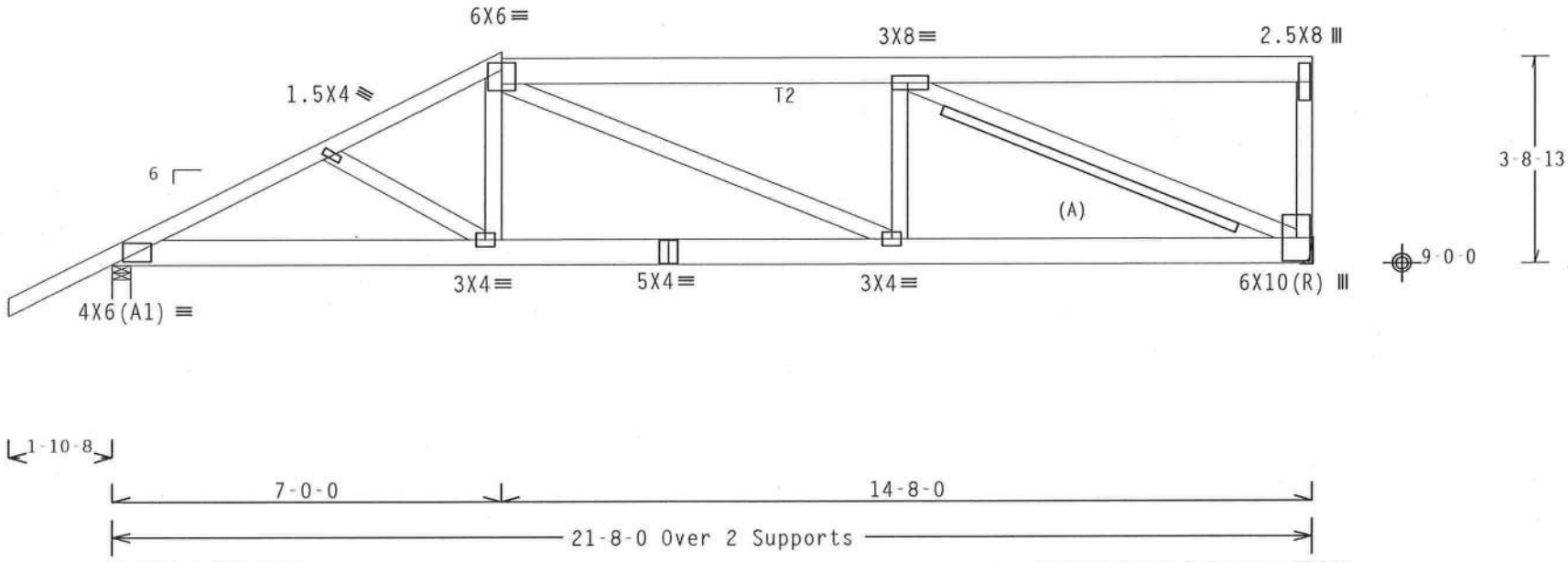

R=1839 U=773 H=Simpson HUS26
w/ (4) 10d Common, 0.148"x3.0" nails in Truss
w/ (14) 10d Common, 0.148"x3.0" nails in Girder
Girder is (2)2X6 min. So.Pine

Design Crit: FBC2007Res/TPI-2002(STD)

PLT TYP. Wave FT/RT=20%(0%)/0(0) 9.02.00 QTY:1 FL/-/4/-/-/R/- Scale =.3125"/Ft.

ALPINE
ITW Building Components Group Inc.
Haines City, FL 33844
FL COA #0 278

WARNING TRUSSES REQUIRE EXTREME CARE IN FABRICATION, HANDLING, SHIPPING, INSTALLING AND BRACING. REFER TO BCSI (BUILDING COMPONENT SAFETY INFORMATION), PUBLISHED BY TPI (TRUSS PLATE INSTITUTE, 218 NORTH LEE STREET, SUITE 312, ALEXANDRIA, VA, 22314) AND WTCA (WOOD TRUSS COUNCIL OF AMERICA, 6300 ENTERPRISE LANE, MADISON, WI 53719) FOR SAFETY PRACTICES PRIOR TO PERFORMING THESE FUNCTIONS. UNLESS OTHERWISE INDICATED TOP CHORD SHALL HAVE PROPERLY ATTACHED STRUCTURAL PANELS AND BOTTOM CHORD SHALL HAVE A PROPERLY ATTACHED RIGID CEILING.

IMPORTANTFURNISH A COPY OF THIS DESIGN TO THE INSTALLATION CONTRACTOR. ITW BCG, INC. SHALL NOT BE RESPONSIBLE FOR ANY DEVIATION FROM THIS DESIGN; ANY FAILURE TO BUILD THE TRUSS IN CONFORMANCE WITH TPI; OR FABRICATING, HANDLING, SHIPPING, INSTALLING & BRACING OF TRUSSES. DESIGN CONFORMS WITH APPLICABLE PROVISIONS OF NDS (NATIONAL DESIGN SPEC, BY AF&PA) AND TPI. ITW BCG CONNECTOR PLATES ARE MADE OF 20/18/16GA (W,H/SS/K) ASTM A653 GRADE 40/60 (W, K/H,SS) GALV. STEEL. APPLY PLATES TO EACH FACE OF TRUSS AND, UNLESS OTHERWISE LOCATED ON THIS DESIGN, POSITION PER DRAWINGS 160A-Z. ANY INSPECTION OF PLATES FOLLOWED BY (1) SHALL BE PER ANNEX A3 OF TPI1-2002 SEC.3. A SEAL ON THIS DRAWING INDICATES ACCEPTANCE OF PROFESSIONAL ENGINEERING RESPONSIBILITY SOLELY FOR THE TRUSS COMPONENT DESIGN SHOWN. THE SUITABILITY AND USE OF THIS COMPONENT FOR ANY BUILDING IS THE RESPONSIBILITY OF THE BUILDING DESIGNER PER ANSI/TPI 1 SEC. 2.

DOUGLAS FLEMING LICENSE No. 66648 STATE OF FLORIDA PROFESSIONAL ENGINEER

TC LL	20.0 PSF	REF	R8228- 60332
TC DL	10.0 PSF	DATE	12/18/09
BC DL	10.0 PSF	DRW	HCUSR8228 09352066
BC LL	0.0 PSF	HC-ENG	JB/DF
TOT.LD.	40.0 PSF	SEQN-	68207
DUR.FAC.	1.25	FROM	AH
SPACING	24.0"	JREF-	1TXP8228Z01

(9-244--Fill in later EDGLEY -- , ** - H9D)

Top chord 2x4 SP #2 Dense
Bot chord 2x4 SP #2 Dense
Webs 2x4 SP #3

Roof overhang supports 2.00 psf soffit load.

In lieu of structural panels use purlins to brace all flat TC @ 24" OC.

MWFRS loads based on trusses located at least 7.50 ft. from roof edge.

110 mph wind, 15.00 ft mean hgt, ASCE 7-05, CLOSED bldg, not located within 4.50 ft from roof edge, CAT II, EXP C, wind TC DL=5.0 psf, wind BC DL=5.0 psf. Iw=1.00 GCpi(+/-)=0.18

Wind reactions based on MWFRS pressures.

Bottom chord checked for 10.00 psf non-concurrent live load.

Deflection meets L/240 live and L/180 total load.

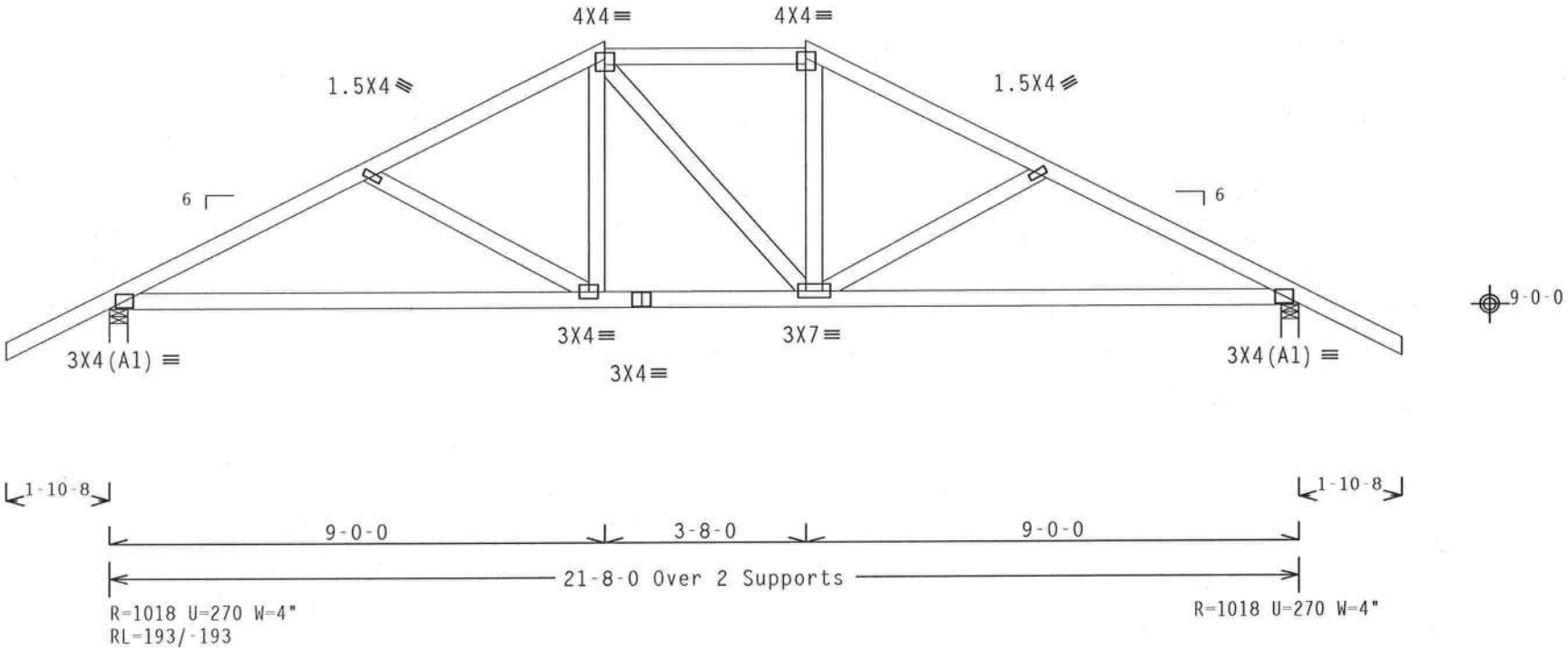

Design Crit: FBC2007Res/TPI-2002(STD)

PLT TYP. Wave | FT/RT=20%(0%)/0(0) | 9.02.00 | QTY:1 | FL/-/4/-/-/R/- | Scale =.3125"/Ft.

ALPINE
ITW Building Components Group Inc.
Haines City, FL 33844
FL COA #0278

WARNING TRUSSES REQUIRE EXTREME CARE IN FABRICATION, HANDLING, SHIPPING, INSTALLING AND BRACING. REFER TO BCSI (BUILDING COMPONENT SAFETY INFORMATION), PUBLISHED BY TPI (TRUSS PLATE INSTITUTE, 218 NORTH LEE STREET, SUITE 312, ALEXANDRIA, VA, 22314) AND WTCA (WOOD TRUSS COUNCIL OF AMERICA, 6300 ENTERPRISE LANE, MADISON, WI 53719) FOR SAFETY PRACTICES PRIOR TO PERFORMING THESE FUNCTIONS. UNLESS OTHERWISE INDICATED TOP CHORD SHALL HAVE PROPERLY ATTACHED STRUCTURAL PANELS AND BOTTOM CHORD SHALL HAVE A PROPERLY ATTACHED RIGID CEILING.

IMPORTANTFURNISH A COPY OF THIS DESIGN TO THE INSTALLATION CONTRACTOR. ITW BCG, INC. SHALL NOT BE RESPONSIBLE FOR ANY DEVIATION FROM THIS DESIGN; ANY FAILURE TO BUILD THE TRUSS IN CONFORMANCE WITH TPI; OR FABRICATING, HANDLING, SHIPPING, INSTALLING & BRACING OF TRUSSES. DESIGN CONFORMS WITH APPLICABLE PROVISIONS OF NDS (NATIONAL DESIGN SPEC. BY AF&PA) AND TPI. ITW BCG CONNECTOR PLATES ARE MADE OF 20/18/16GA (W,H/SS/K) ASTM A653 GRADE 40/60 (W, K/H,SS) GALV. STEEL. APPLY PLATES TO EACH FACE OF TRUSS AND, UNLESS OTHERWISE LOCATED ON THIS DESIGN, POSITION PER DRAWINGS 160A-Z. ANY INSPECTION OF PLATES FOLLOWED BY (1) SHALL BE PER ANNEX A3 OF TPI1-2002 SEC.3. A SEAL ON THIS DRAWING INDICATES ACCEPTANCE OF PROFESSIONAL ENGINEERING RESPONSIBILITY SOLELY FOR THE TRUSS COMPONENT DESIGN SHOWN. THE SUITABILITY AND USE OF THIS COMPONENT FOR ANY BUILDING IS THE RESPONSIBILITY OF THE BUILDING DESIGNER PER ANSI/TPI 1 SEC. 2.

DOUGLAS FLEMING LICENSE No. 66648 STATE OF FLORIDA PROFESSIONAL ENGINEER
Dec 18 '09

TC LL	20.0 PSF	REF	R8228- 60333
TC DL	10.0 PSF	DATE	12/18/09
BC DL	10.0 PSF	DRW	HCUSR8228 09352016
BC LL	0.0 PSF	HC-ENG	JB/DF *
TOT.LD.	40.0 PSF	SEQN-	68183
DUR.FAC.	1.25	FROM	AH
SPACING	24.0"	JREF-	1TXP8228Z01

(9-244--Fill in later EDGLEY -- , ** - D)

Top chord 2x4 SP #2 Dense
Bot chord 2x4 SP #2 Dense
Webs 2x4 SP #3

Roof overhang supports 2.00 psf soffit load.

Bottom chord checked for 10.00 psf non-concurrent live load.

MWFRS loads based on trusses located at least 7.50 ft. from roof edge.

110 mph wind, 15.00 ft mean hgt, ASCE 7-05, CLOSED bldg, not located within 4.50 ft from roof edge, CAT II, EXP C, wind TC DL=5.0 psf, wind BC DL=5.0 psf. Iw=1.00 GCpi(+/-)=0.18

Wind reactions based on MWFRS pressures.

Deflection meets L/240 live and L/180 total load.

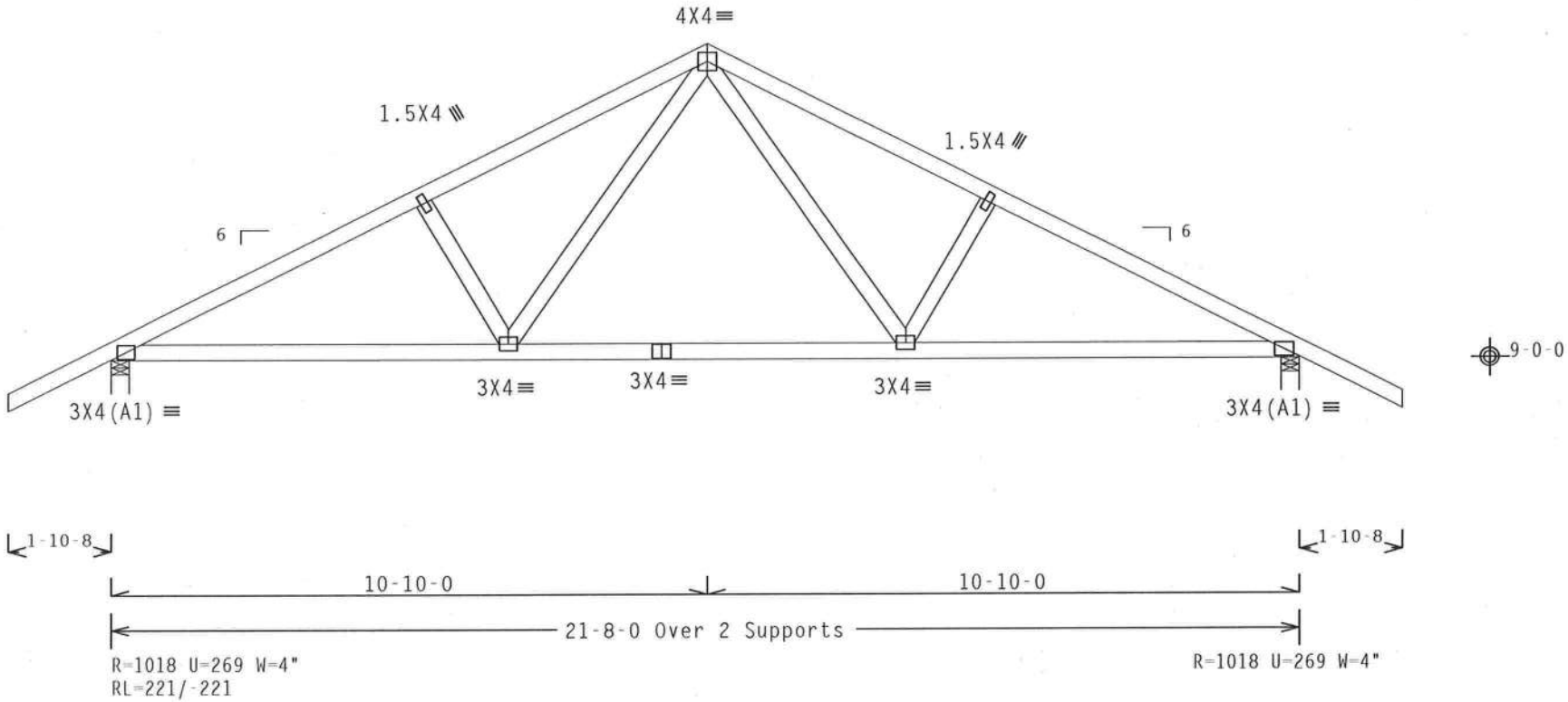

Design Crit: FBC2007Res/TPI-2002(STD)

PLT TYP. Wave | FT/RT=20%(0%)/0(0) | 9.02.00 [illegible] | QTY:5 | FL/-/4/-/-/R/- | Scale =.3125"/Ft.

ALPINE
ITW Building Components Group Inc.
Haines City, FL 33844
FL [illegible] 278

WARNING TRUSSES REQUIRE EXTREME CARE IN FABRICATION, HANDLING, SHIPPING, INSTALLING AND BRACING. REFER TO BCSI (BUILDING COMPONENT SAFETY INFORMATION), PUBLISHED BY TPI (TRUSS PLATE INSTITUTE, 218 NORTH LEE STREET, SUITE 312, ALEXANDRIA, VA. 22314) AND WTCA (WOOD TRUSS COUNCIL OF AMERICA, 6300 ENTERPRISE LANE, MADISON, WI 53719) FOR SAFETY PRACTICES PRIOR TO PERFORMING THESE FUNCTIONS. UNLESS OTHERWISE INDICATED TOP CHORD SHALL HAVE PROPERLY ATTACHED STRUCTURAL PANELS AND BOTTOM CHORD SHALL HAVE A PROPERLY ATTACHED RIGID CEILING.

IMPORTANTFURNISH A COPY OF THIS DESIGN TO THE INSTALLATION CONTRACTOR. ITW BCG, INC. SHALL NOT BE RESPONSIBLE FOR ANY DEVIATION FROM THIS DESIGN; ANY FAILURE TO BUILD THE TRUSS IN CONFORMANCE WITH TPI; OR FABRICATING, HANDLING, SHIPPING, INSTALLING & BRACING OF TRUSSES.
DESIGN CONFORMS WITH APPLICABLE PROVISIONS OF NDS (NATIONAL DESIGN SPEC. BY AF&PA) AND TPI. ITW BCG CONNECTOR PLATES ARE MADE OF 20/18/16GA (W,H/SS/K) ASTM A653 GRADE 40/60 (W, K/H,SS) GALV. STEEL. APPLY PLATES TO EACH FACE OF TRUSS AND, UNLESS OTHERWISE LOCATED ON THIS DESIGN, POSITION PER DRAWINGS 160A-Z. ANY INSPECTION OF PLATES FOLLOWED BY (I) SHALL BE PER ANNEX A3 OF TPI1-2002 SEC.3. A SEAL ON THIS DRAWING INDICATES ACCEPTANCE OF PROFESSIONAL ENGINEERING RESPONSIBILITY SOLELY FOR THE TRUSS COMPONENT DESIGN SHOWN. THE SUITABILITY AND USE OF THIS COMPONENT FOR ANY BUILDING IS THE RESPONSIBILITY OF THE BUILDING DESIGNER PER ANSI/TPI 1 SEC. 2.

DOUGLAS FLEMING LICENSE No. 66648 STATE OF FLORIDA PROFESSIONAL ENGINEER

[illegible]18 '09

TC LL	20.0 PSF	REF	R8228- 60334
TC DL	10.0 PSF	DATE	12/18/09
BC DL	10.0 PSF	DRW	HCUSR8228 09352017
BC LL	0.0 PSF	HC-ENG	JB/DF *
TOT.LD.	40.0 PSF	SEQN-	68188
DUR.FAC.	1.25	FROM	AH
SPACING	24.0"	JREF-	1TXP8228Z01

(9-244--Fill in later EDGLEY -- , ** - D5)

Top chord 2x4 SP #2 Dense
Bot chord 2x4 SP #2 Dense
Webs 2x4 SP #3

Roof overhang supports 2.00 psf soffit load.

H = recommended connection based on manufacturer tested capacities and calculations. Conditions may exist that require different connections than indicated. Refer to manufacturer publication for additional information.

Bottom chord checked for 10.00 psf non-concurrent live load.

MWFRS loads based on trusses located at least 15.00 ft. from roof edge.

(**) 2 plate(s) require special positioning. Refer to scaled plate plot details for special positioning requirements.

110 mph wind, 15.00 ft mean hgt, ASCE 7-05, CLOSED bldg, not located within 4.50 ft from roof edge, CAT II, EXP C, wind TC DL=5.0 psf, wind BC DL=5.0 psf. Iw=1.00 GCpi(+/-)=0.18

Wind reactions based on MWFRS pressures.

In lieu of structural panels use purlins to brace all flat TC @ 24" OC.

Deflection meets L/240 live and L/180 total load.

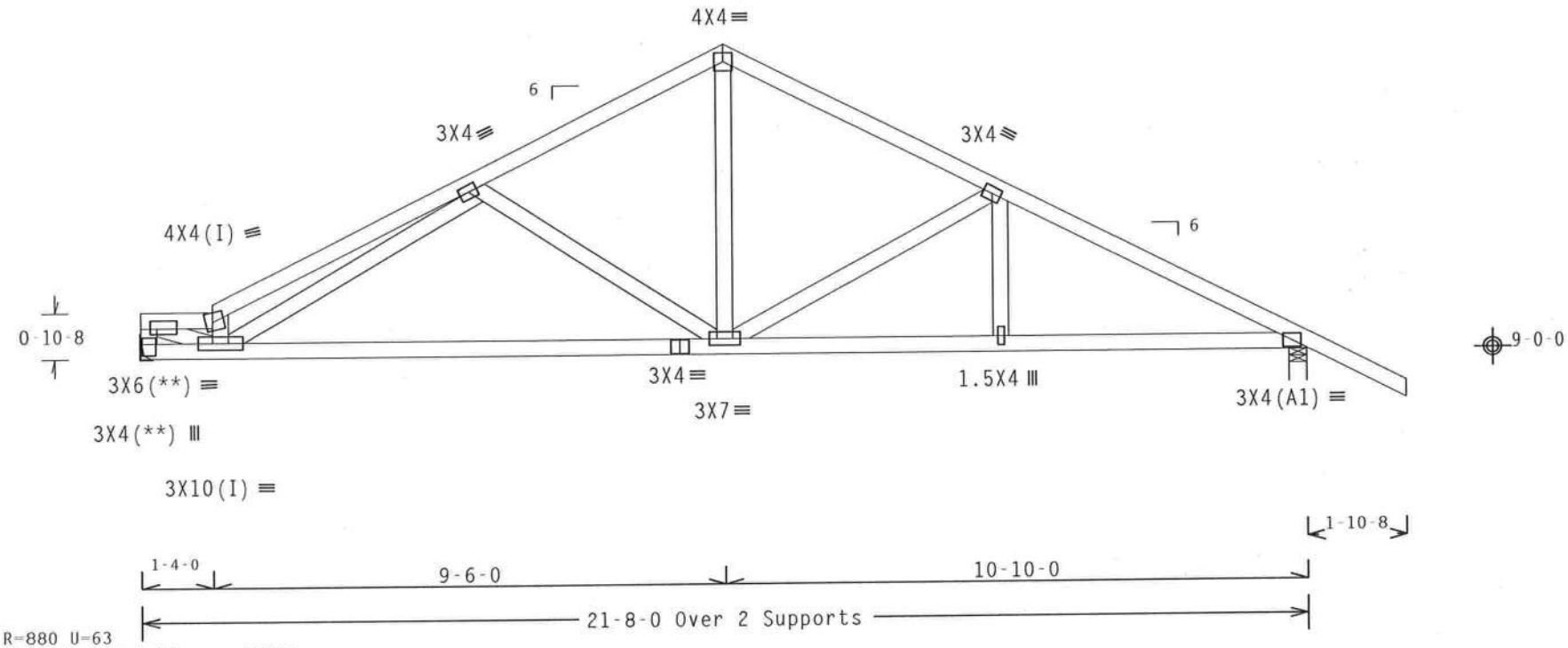

R=880 U=63
RL=184/-180 H=Simpson LUS24
w/ (2) 10d Common, 0.148"x3.0" nails in Truss
w/ (4) 10d Common, 0.148"x3.0" nails in Girder
Girder is (2)2X0 min. So.Pine

R=1030 U=84 W=4"

Design Crit: FBC2007Res/TPI-2002(STD)
FT/RT=20%(0%)/0(0)

PLT TYP. Wave | 9.02.00 | QTY:1 | FL/-/4/-/-/R/- | Scale =.3125"/Ft.

ALPINE
ITW Building Components Group Inc.
Haines City, FL 33844
FL. COA - 2278

WARNING TRUSSES REQUIRE EXTREME CARE IN FABRICATION, HANDLING, SHIPPING, INSTALLING AND BRACING. REFER TO BCSI (BUILDING COMPONENT SAFETY INFORMATION), PUBLISHED BY TPI (TRUSS PLATE INSTITUTE, 218 NORTH LEE STREET, SUITE 312, ALEXANDRIA, VA, 22314) AND WTCA (WOOD TRUSS COUNCIL OF AMERICA, 6300 ENTERPRISE LANE, MADISON, WI 53719) FOR SAFETY PRACTICES PRIOR TO PERFORMING THESE FUNCTIONS. UNLESS OTHERWISE INDICATED TOP CHORD SHALL HAVE PROPERLY ATTACHED STRUCTURAL PANELS AND BOTTOM CHORD SHALL HAVE A PROPERLY ATTACHED RIGID CEILING.

IMPORTANT FURNISH A COPY OF THIS DESIGN TO THE INSTALLATION CONTRACTOR. ITW BCG, INC. SHALL NOT BE RESPONSIBLE FOR ANY DEVIATION FROM THIS DESIGN; ANY FAILURE TO BUILD THE TRUSS IN CONFORMANCE WITH TPI; OR FABRICATING, HANDLING, SHIPPING, INSTALLING & BRACING OF TRUSSES. DESIGN CONFORMS WITH APPLICABLE PROVISIONS OF NDS (NATIONAL DESIGN SPEC. BY AF&PA) AND TPI. ITW BCG CONNECTOR PLATES ARE MADE OF 20/18/16GA (W,H/SS/K) ASTM A653 GRADE 40/60 (W, K/H,SS) GALV. STEEL. APPLY PLATES TO EACH FACE OF TRUSS AND, UNLESS OTHERWISE LOCATED ON THIS DESIGN, POSITION PER DRAWINGS 160A-Z. ANY INSPECTION OF PLATES FOLLOWED BY (1) SHALL BE PER ANNEX A3 OF TPI1-2002 SEC.3. A SEAL ON THIS DRAWING INDICATES ACCEPTANCE OF PROFESSIONAL ENGINEERING RESPONSIBILITY SOLELY FOR THE TRUSS COMPONENT DESIGN SHOWN. THE SUITABILITY AND USE OF THIS COMPONENT FOR ANY BUILDING IS THE RESPONSIBILITY OF THE BUILDING DESIGNER PER ANSI/TPI 1 SEC. 2.

DOUGLAS FLEMING LICENSE No. 66648 STATE OF FLORIDA PROFESSIONAL ENGINEER

TC LL	20.0 PSF	REF R8228- 60335
TC DL	10.0 PSF	DATE 12/18/09
BC DL	10.0 PSF	DRW HCUSR8228 09352041
BC LL	0.0 PSF	HC-ENG JB/DF
TOT.LD.	40.0 PSF	SEQN- 72795
DUR.FAC.	1.25	FROM AH
SPACING	24.0"	JREF- 1TXP8228Z01

'09

(9-244--Fill in later EDGLEY -- , ** - D4)

THIS DWG PREPARED FROM COMPUTER INPUT (LOADS & DIMENSIONS) SUBMITTED BY TRUSS MFR.

Top chord 2x4 SP #2 Dense
Bot chord 2x4 SP #2 Dense
Webs 2x4 SP #3

Roof overhang supports 2.00 psf soffit load.

H = recommended connection based on manufacturer tested capacities and calculations. Conditions may exist that require different connections than indicated. Refer to manufacturer publication for additional information.

Deflection meets L/240 live and L/180 total load.

110 mph wind, 15.00 ft mean hgt, ASCE 7-05, CLOSED bldg, not located within 4.50 ft from roof edge, CAT II, EXP C, wind TC DL=5.0 psf, wind BC DL=5.0 psf. Iw=1.00 GCpi(+/-)=0.18

Wind reactions based on MWFRS pressures.

In lieu of structural panels use purlins to brace all flat TC @ 24" OC.

Bottom chord checked for 10.00 psf non-concurrent live load.

MWFRS loads based on trusses located at least 15.00 ft. from roof edge.

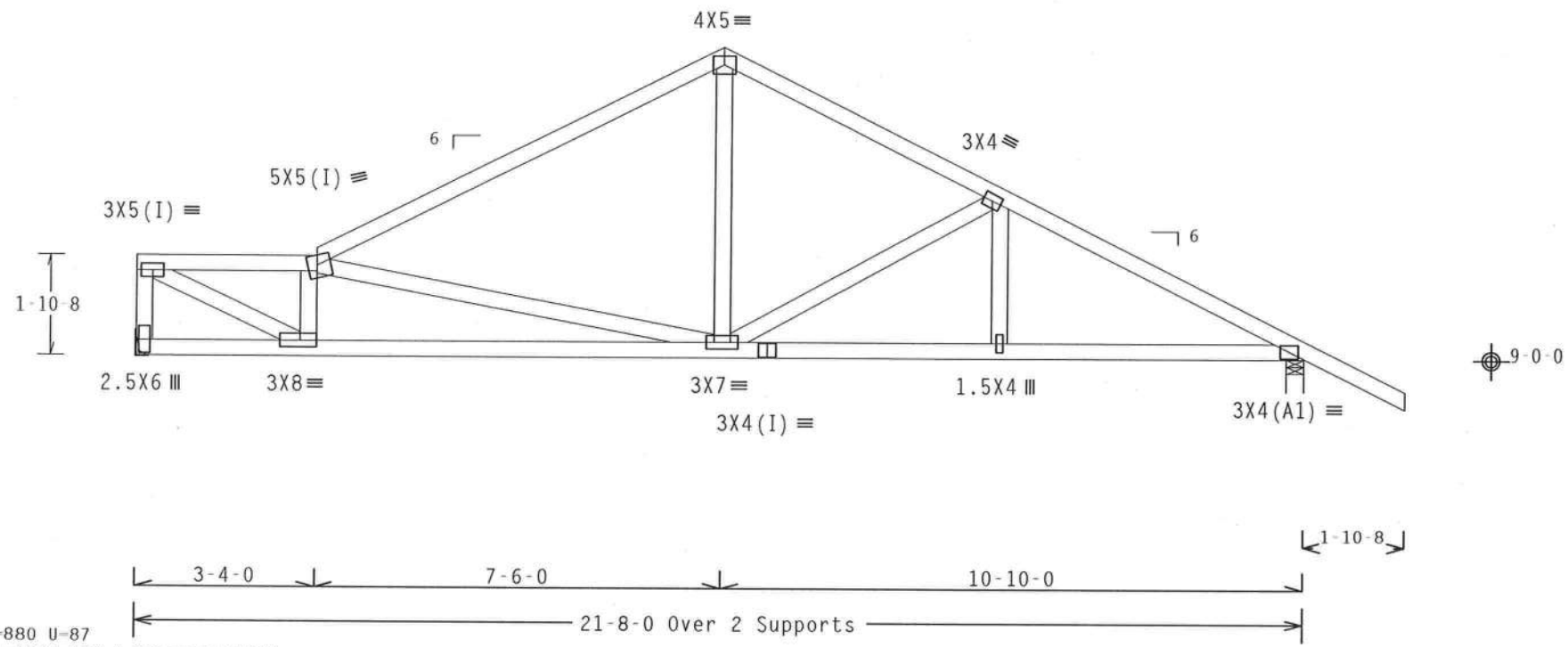

R=880 U=87
RL=162/-173 H=Simpson LUS24
w/ (2) 10d Common, 0.148"x3.0" nails in Truss
w/ (4) 10d Common, 0.148"x3.0" nails in Girder
Girder is (2)2X0 min. So.Pine

R=1030 U=89 W=4"

Design Crit: FBC2007Res/TPI-2002(STD)

PLT TYP. Wave | FT/RT=20%(0%)/0(0) | 9.02.00 | QTY:1 | FL/-/4/-/-/R/- | Scale =.3125"/Ft.

ALPINE
ITW Building Components Group Inc.
Haines City, FL 33844
FL COA #0 278

WARNING TRUSSES REQUIRE EXTREME CARE IN FABRICATION, HANDLING, SHIPPING, INSTALLING AND BRACING. REFER TO BCSI (BUILDING COMPONENT SAFETY INFORMATION), PUBLISHED BY TPI (TRUSS PLATE INSTITUTE, 218 NORTH LEE STREET, SUITE 312, ALEXANDRIA, VA. 22314) AND WTCA (WOOD TRUSS COUNCIL OF AMERICA, 6300 ENTERPRISE LANE, MADISON, WI 53719) FOR SAFETY PRACTICES PRIOR TO PERFORMING THESE FUNCTIONS. UNLESS OTHERWISE INDICATED TOP CHORD SHALL HAVE PROPERLY ATTACHED STRUCTURAL PANELS AND BOTTOM CHORD SHALL HAVE A PROPERLY ATTACHED RIGID CEILING.

IMPORTANTFURNISH A COPY OF THIS DESIGN TO THE INSTALLATION CONTRACTOR. ITW BCG, INC. SHALL NOT BE RESPONSIBLE FOR ANY DEVIATION FROM THIS DESIGN; ANY FAILURE TO BUILD THE TRUSS IN CONFORMANCE WITH TPI; OR FABRICATING, HANDLING, SHIPPING, INSTALLING & BRACING OF TRUSSES. DESIGN CONFORMS WITH APPLICABLE PROVISIONS OF NDS (NATIONAL DESIGN SPEC. BY AF&PA) AND TPI. ITW BCG CONNECTOR PLATES ARE MADE OF 20/18/16GA (W,H/SS/K) ASTM A653 GRADE 40/60 (W, K/H,SS) GALV. STEEL. APPLY PLATES TO EACH FACE OF TRUSS AND, UNLESS OTHERWISE LOCATED ON THIS DESIGN, POSITION PER DRAWINGS 160A-Z. ANY INSPECTION OF PLATES FOLLOWED BY (1) SHALL BE PER ANNEX A3 OF TPI1-2002 SEC.3. A SEAL ON THIS DRAWING INDICATES ACCEPTANCE OF PROFESSIONAL ENGINEERING RESPONSIBILITY SOLELY FOR THE TRUSS COMPONENT DESIGN SHOWN. THE SUITABILITY AND USE OF THIS COMPONENT FOR ANY BUILDING IS THE RESPONSIBILITY OF THE BUILDING DESIGNER PER ANSI/TPI 1 SEC. 2.

DOUGLAS FLEMING LICENSE No. 66648 STATE OF FLORIDA PROFESSIONAL ENGINEER

DEC 18 '09

TC LL	20.0 PSF	REF	R8228- 60336
TC DL	10.0 PSF	DATE	12/18/09
BC DL	10.0 PSF	DRW	HCUSR8228 09352042
BC LL	0.0 PSF	HC-ENG	JB/DF
TOT.LD.	40.0 PSF	SEQN-	72810
DUR.FAC.	1.25	FROM	AH
SPACING	24.0"	JREF-	1TYP8228701

(9-244--Fill in later EDGLEY -- , ** - D3)

Top chord 2x4 SP #2 Dense
Bot chord 2x4 SP #2 Dense
Webs 2x4 SP #3

Left end vertical not exposed to wind pressure.

Roof overhang supports 2.00 psf soffit load.

In lieu of structural panels use purlins to brace all flat TC @ 24" OC.

Bottom chord checked for 10.00 psf non-concurrent live load.

MWFRS loads based on trusses located at least 15.00 ft. from roof edge.

110 mph wind, 15.00 ft mean hgt, ASCE 7-05, CLOSED bldg, not located within 4.50 ft from roof edge, CAT II, EXP C, wind TC DL=5.0 psf, wind BC DL=5.0 psf. Iw=1.00 GCpi(+/-)=0.18

Wind reactions based on MWFRS pressures.

H = recommended connection based on manufacturer tested capacities and calculations. Conditions may exist that require different connections than indicated. Refer to manufacturer publication for additional information.

Deflection meets L/240 live and L/180 total load.

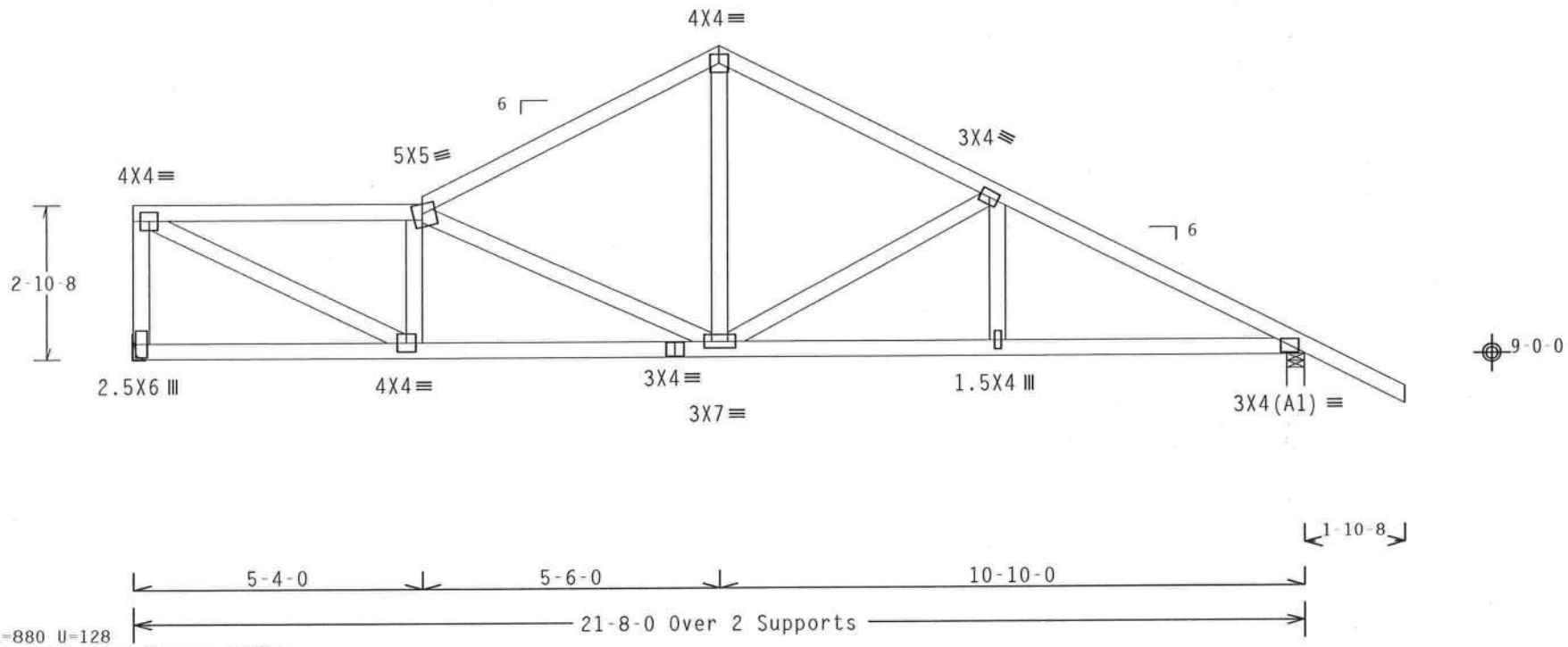

R=880 U=128
RL=139/-165 H=Simpson LUS24
w/ (2) 10d Common, 0.148"x3.0" nails in Truss
w/ (4) 10d Common, 0.148"x3.0" nails in Girder
Girder is (2)2X0 min. So.Pine

R=1030 U=98 W=4"

Design Crit: FBC2007Res/TPI-2002(STD)

PLT TYP. Wave | FT/RT=20%(0%)/0(0) | 9.02.00 | QTY:1 | FL/-/4/-/-/R/- | Scale =.3125"/Ft.

ALPINE
ITW Building Components Group Inc.
Haines City, FL 33844
FL COA #0 278

WARNING TRUSSES REQUIRE EXTREME CARE IN FABRICATION, HANDLING, SHIPPING, INSTALLING AND BRACING. REFER TO BCSI (BUILDING COMPONENT SAFETY INFORMATION), PUBLISHED BY TPI (TRUSS PLATE INSTITUTE, 218 NORTH LEE STREET, SUITE 312, ALEXANDRIA, VA, 22314) AND WTCA (WOOD TRUSS COUNCIL OF AMERICA, 6300 ENTERPRISE LANE, MADISON, WI 53719) FOR SAFETY PRACTICES PRIOR TO PERFORMING THESE FUNCTIONS. UNLESS OTHERWISE INDICATED TOP CHORD SHALL HAVE PROPERLY ATTACHED STRUCTURAL PANELS AND BOTTOM CHORD SHALL HAVE A PROPERLY ATTACHED RIGID CEILING.

IMPORTANT FURNISH A COPY OF THIS DESIGN TO THE INSTALLATION CONTRACTOR. ITW BCG, INC. SHALL NOT BE RESPONSIBLE FOR ANY DEVIATION FROM THIS DESIGN; ANY FAILURE TO BUILD THE TRUSS IN CONFORMANCE WITH TPI; OR FABRICATING, HANDLING, SHIPPING, INSTALLING & BRACING OF TRUSSES. DESIGN CONFORMS WITH APPLICABLE PROVISIONS OF NDS (NATIONAL DESIGN SPEC. BY AF&PA) AND TPI. ITW BCG CONNECTOR PLATES ARE MADE OF 20/18/16GA (W,H/SS/K) ASTM A653 GRADE 40/60 (W, K/H,SS) GALV. STEEL. APPLY PLATES TO EACH FACE OF TRUSS AND, UNLESS OTHERWISE LOCATED ON THIS DESIGN, POSITION PER DRAWINGS 160A-Z. ANY INSPECTION OF PLATES FOLLOWED BY (1) SHALL BE PER ANNEX A3 OF TPI1-2002 SEC.3. A SEAL ON THIS DRAWING INDICATES ACCEPTANCE OF PROFESSIONAL ENGINEERING RESPONSIBILITY SOLELY FOR THE TRUSS COMPONENT DESIGN SHOWN. THE SUITABILITY AND USE OF THIS COMPONENT FOR ANY BUILDING IS THE RESPONSIBILITY OF THE BUILDING DESIGNER PER ANSI/TPI 1 SEC. 2.

DOUGLAS FLEMING LICENSE No. 66648 STATE OF FLORIDA PROFESSIONAL ENGINEER
DEC 18 '09

TC LL	20.0 PSF	REF R8228- 60337
TC DL	10.0 PSF	DATE 12/18/09
BC DL	10.0 PSF	DRW HCUSR8228 09352043
BC LL	0.0 PSF	HC-ENG JB/DF
TOT.LD.	40.0 PSF	SEQN- 72818
DUR.FAC.	1.25	FROM AH
SPACING	24.0"	JREF- 1TXP8228Z01

(9-244--Fill in later EDGLEY -- , ** - D2)

Top chord 2x4 SP #2 Dense
Bot chord 2x4 SP #2 Dense
Webs 2x4 SP #3

Left end vertical not exposed to wind pressure.

Roof overhang supports 2.00 psf soffit load.

In lieu of structural panels use purlins to brace all flat TC @ 24" OC.

Bottom chord checked for 10.00 psf non-concurrent live load.

MWFRS loads based on trusses located at least 7.50 ft. from roof edge.

110 mph wind, 15.00 ft mean hgt, ASCE 7-05, CLOSED bldg, not located within 4.50 ft from roof edge, CAT II, EXP C, wind TC DL=5.0 psf, wind BC DL=5.0 psf. Iw=1.00 GCpi(+/-)=0.18

Wind reactions based on MWFRS pressures.

H = recommended connection based on manufacturer tested capacities and calculations. Conditions may exist that require different connections than indicated. Refer to manufacturer publication for additional information.

Deflection meets L/240 live and L/180 total load.

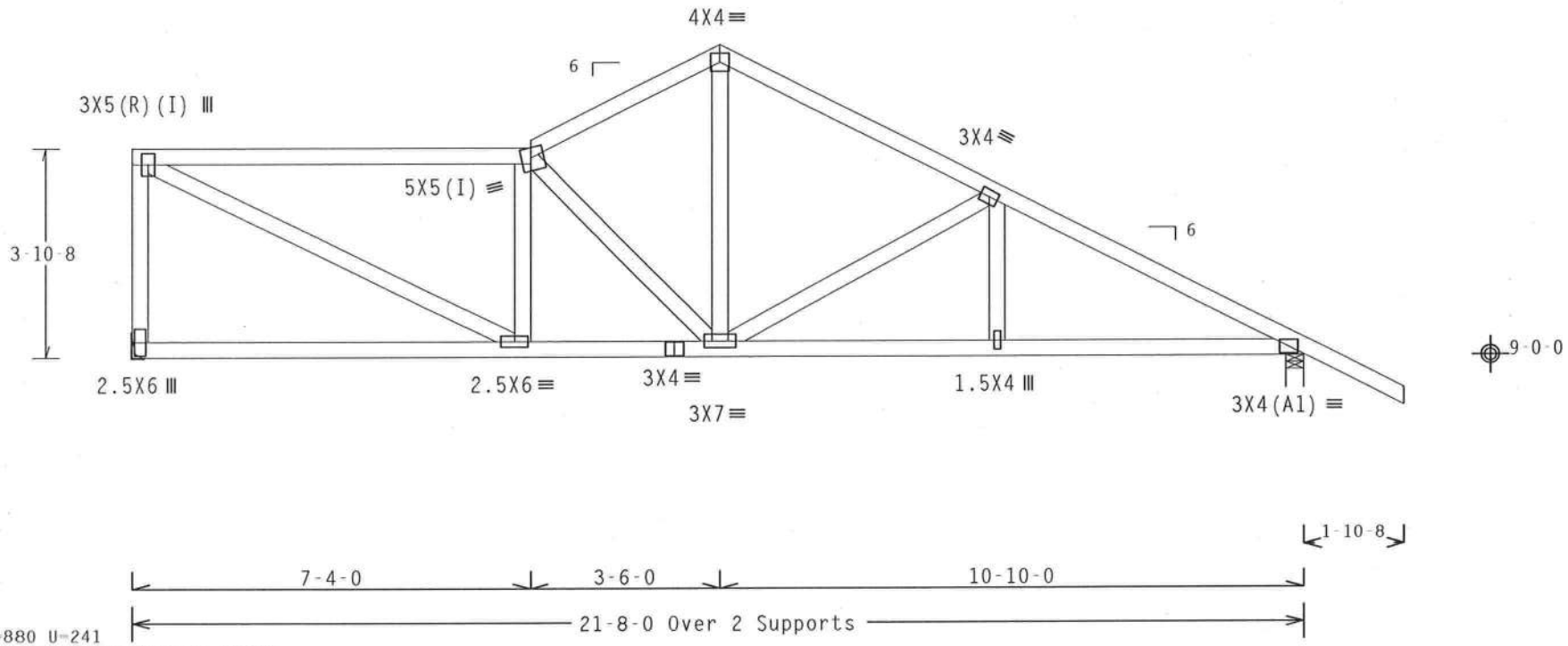

R=880 U=241
RL=116/-158 H=Simpson LUS24
w/ (2) 10d Common, 0.148"x3.0" nails in Truss
w/ (4) 10d Common, 0.148"x3.0" nails in Girder
Girder is (2)2X0 min. So.Pine

R=1030 U=262 W=4"

Design Crit: FBC2007Res/TPI-2002(STD)

PLT TYP. Wave | FT/RT=20%(0%)/0(0) | 9.02.00 | QTY:1 | FL/-/4/-/-/R/- | Scale =.3125"/Ft.

ALPINE
ITW Building Components Group Inc.
Haines City, FL 33844
FL COA #0278

WARNING TRUSSES REQUIRE EXTREME CARE IN FABRICATION, HANDLING, SHIPPING, INSTALLING AND BRACING. REFER TO BCSI (BUILDING COMPONENT SAFETY INFORMATION), PUBLISHED BY TPI (TRUSS PLATE INSTITUTE, 218 NORTH LEE STREET, SUITE 312, ALEXANDRIA, VA. 22314) AND WTCA (WOOD TRUSS COUNCIL OF AMERICA, 6300 ENTERPRISE LANE, MADISON, WI 53719) FOR SAFETY PRACTICES PRIOR TO PERFORMING THESE FUNCTIONS. UNLESS OTHERWISE INDICATED TOP CHORD SHALL HAVE PROPERLY ATTACHED STRUCTURAL PANELS AND BOTTOM CHORD SHALL HAVE A PROPERLY ATTACHED RIGID CEILING.

IMPORTANTFURNISH A COPY OF THIS DESIGN TO THE INSTALLATION CONTRACTOR. ITW BCG, INC. SHALL NOT BE RESPONSIBLE FOR ANY DEVIATION FROM THIS DESIGN; ANY FAILURE TO BUILD THE TRUSS IN CONFORMANCE WITH TPI; OR FABRICATING, HANDLING, SHIPPING, INSTALLING & BRACING OF TRUSSES. DESIGN CONFORMS WITH APPLICABLE PROVISIONS OF NDS (NATIONAL DESIGN SPEC, BY AF&PA) AND TPI. ITW BCG CONNECTOR PLATES ARE MADE OF 20/18/16GA (W,H/SS/K) ASTM A653 GRADE 40/60 (W, K/H,SS) GALV. STEEL. APPLY PLATES TO EACH FACE OF TRUSS AND. UNLESS OTHERWISE LOCATED ON THIS DESIGN, POSITION PER DRAWINGS 160A-Z. ANY INSPECTION OF PLATES FOLLOWED BY (1) SHALL BE PER ANNEX A3 OF TPI1-2002 SEC.3. A SEAL ON THIS DRAWING INDICATES ACCEPTANCE OF PROFESSIONAL ENGINEERING RESPONSIBILITY SOLELY FOR THE TRUSS COMPONENT DESIGN SHOWN. THE SUITABILITY AND USE OF THIS COMPONENT FOR ANY BUILDING IS THE RESPONSIBILITY OF THE BUILDING DESIGNER PER ANSI/TPI 1 SEC. 2.

DOUGLAS FLEMING LICENSE No. 66648 STATE OF FLORIDA PROFESSIONAL ENGINEER

18 '09

TC LL	20.0 PSF	REF	R8228- 60338
TC DL	10.0 PSF	DATE	12/18/09
BC DL	10.0 PSF	DRW	HCUSR8228 09352044
BC LL	0.0 PSF	HC-ENG	JB/DF
TOT.LD.	40.0 PSF	SEQN-	72826
DUR.FAC.	1.25	FROM	AH
SPACING	24.0"	JREF-	1TXP8228Z01

(9-244--Fill in later EDGLEY -- , ** - D1)

Top chord 2x4 SP #2 Dense
Bot chord 2x4 SP #2 Dense
Webs 2x4 SP #3

Left end vertical not exposed to wind pressure.

Roof overhang supports 2.00 psf soffit load.

H = recommended connection based on manufacturer tested capacities and calculations. Conditions may exist that require different connections than indicated. Refer to manufacturer publication for additional information.

Deflection meets L/240 live and L/180 total load.

110 mph wind, 15.00 ft mean hgt, ASCE 7-05, CLOSED bldg, not located within 4.50 ft from roof edge, CAT II, EXP C, wind TC DL=5.0 psf, wind BC DL=5.0 psf. Iw=1.00 GCpi(+/-)=0.18

Wind reactions based on MWFRS pressures.

Max JT VERT DEFL: LL: 0.11" DL: 0.15" recommended camber 1/4"

In lieu of structural panels use purlins to brace all flat TC @ 24" OC.

Bottom chord checked for 10.00 psf non-concurrent live load.

MWFRS loads based on trusses located at least 7.50 ft. from roof edge.

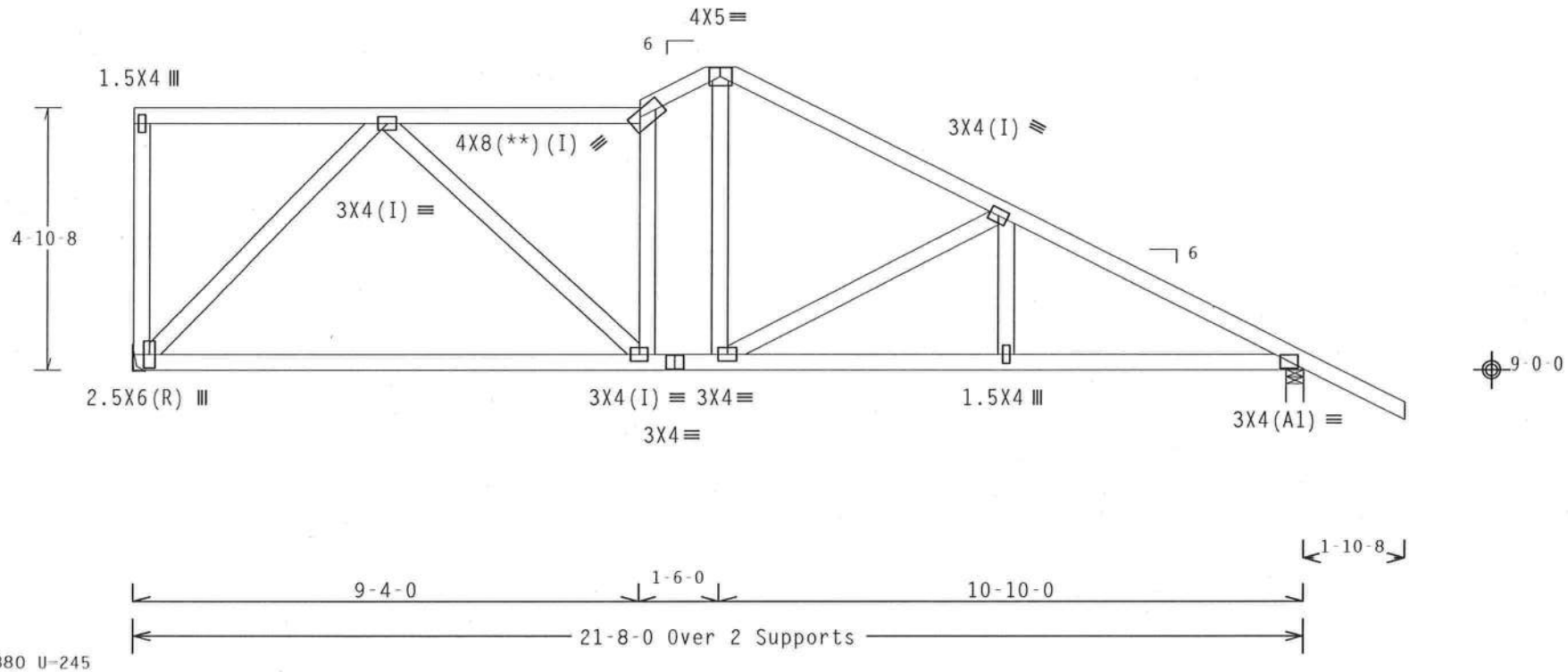

R=880 U=245
RL=90/-192 H=Simpson LUS24
w/ (2) 10d Common, 0.148"x3.0" nails in Truss
w/ (4) 10d Common, 0.148"x3.0" nails in Girder
Girder is (2)2X0 min. So.Pine

R=1030 U=252 W=4"

Design Crit: FBC2007Res/TPI-2002(STD)

PLT TYP. Wave | FT/RT=20%(0%)/0(0) | 9.02.00 | QTY:1 | FL/-/4/-/-/R/- | Scale =.3125"/Ft.

ALPINE
ITW Building Components Group Inc.
Haines City, FL 33844
FL COA #0278

WARNING TRUSSES REQUIRE EXTREME CARE IN FABRICATION, HANDLING, SHIPPING, INSTALLING AND BRACING. REFER TO BCSI (BUILDING COMPONENT SAFETY INFORMATION), PUBLISHED BY TPI (TRUSS PLATE INSTITUTE, 218 NORTH LEE STREET, SUITE 312, ALEXANDRIA, VA, 22314) AND WTCA (WOOD TRUSS COUNCIL OF AMERICA, 6300 ENTERPRISE LANE, MADISON, WI 53719) FOR SAFETY PRACTICES PRIOR TO PERFORMING THESE FUNCTIONS. UNLESS OTHERWISE INDICATED TOP CHORD SHALL HAVE PROPERLY ATTACHED STRUCTURAL PANELS AND BOTTOM CHORD SHALL HAVE A PROPERLY ATTACHED RIGID CEILING.

IMPORTANT FURNISH A COPY OF THIS DESIGN TO THE INSTALLATION CONTRACTOR. ITW BCG, INC. SHALL NOT BE RESPONSIBLE FOR ANY DEVIATION FROM THIS DESIGN; ANY FAILURE TO BUILD THE TRUSS IN CONFORMANCE WITH TPI; OR FABRICATING, HANDLING, SHIPPING, INSTALLING & BRACING OF TRUSSES. DESIGN CONFORMS WITH APPLICABLE PROVISIONS OF NDS (NATIONAL DESIGN SPEC. BY AF&PA) AND TPI. ITW BCG CONNECTOR PLATES ARE MADE OF 20/18/16GA (W,H/SS/K) ASTM A653 GRADE 40/60 (W, K/H,SS) GALV. STEEL. APPLY PLATES TO EACH FACE OF TRUSS AND, UNLESS OTHERWISE LOCATED ON THIS DESIGN, POSITION PER DRAWINGS 160A-Z. ANY INSPECTION OF PLATES FOLLOWED BY (1) SHALL BE PER ANNEX A3 OF TPI1-2002 SEC.3. A SEAL ON THIS DRAWING INDICATES ACCEPTANCE OF PROFESSIONAL ENGINEERING RESPONSIBILITY SOLELY FOR THE TRUSS COMPONENT DESIGN SHOWN. THE SUITABILITY AND USE OF THIS COMPONENT FOR ANY BUILDING IS THE RESPONSIBILITY OF THE BUILDING DESIGNER PER ANSI/TPI 1 SEC. 2.

DOUGLAS FLEMING LICENSE No. 66648 STATE OF FLORIDA PROFESSIONAL ENGINEER
Dec 18 '09

TC LL	20.0 PSF	REF	R8228- 60339
TC DL	10.0 PSF	DATE	12/18/09
BC DL	10.0 PSF	DRW	HCUSR8228 09352045
BC LL	0.0 PSF	HC-ENG	JB/DF
TOT.LD.	40.0 PSF	SEQN-	72839
DUR.FAC.	1.25	FROM	AH
SPACING	24.0"	JREF-	1TXP8228Z01

Top chord 2x4 SP #2 Dense
Bot chord 2x4 SP #2 Dense
Webs 2x4 SP #3

Roof overhang supports 2.00 psf soffit load.

H = recommended connection based on manufacturer tested capacities and calculations. Conditions may exist that require different connections than indicated. Refer to manufacturer publication for additional information.

In lieu of structural panels use purlins to brace all flat TC @ 24" OC.

Deflection meets L/240 live and L/180 total load.

110 mph wind, 15.00 ft mean hgt, ASCE 7-05, CLOSED bldg, not located within 4.50 ft from roof edge, CAT II, EXP C, wind TC DL=5.0 psf, wind BC DL=5.0 psf. Iw=1.00 GCpi(+/-)=0.18

Wind reactions based on MWFRS pressures.

Right end vertical not exposed to wind pressure.

(A) 1x4 #3SRB SPF-S or better "T" brace. 80% length of web member. Attach with 8d Box or Gun (0.113"x2.5",min.)nails @ 6" OC.

Bottom chord checked for 10.00 psf non-concurrent live load.

MWFRS loads based on trusses located at least 7.50 ft. from roof edge.

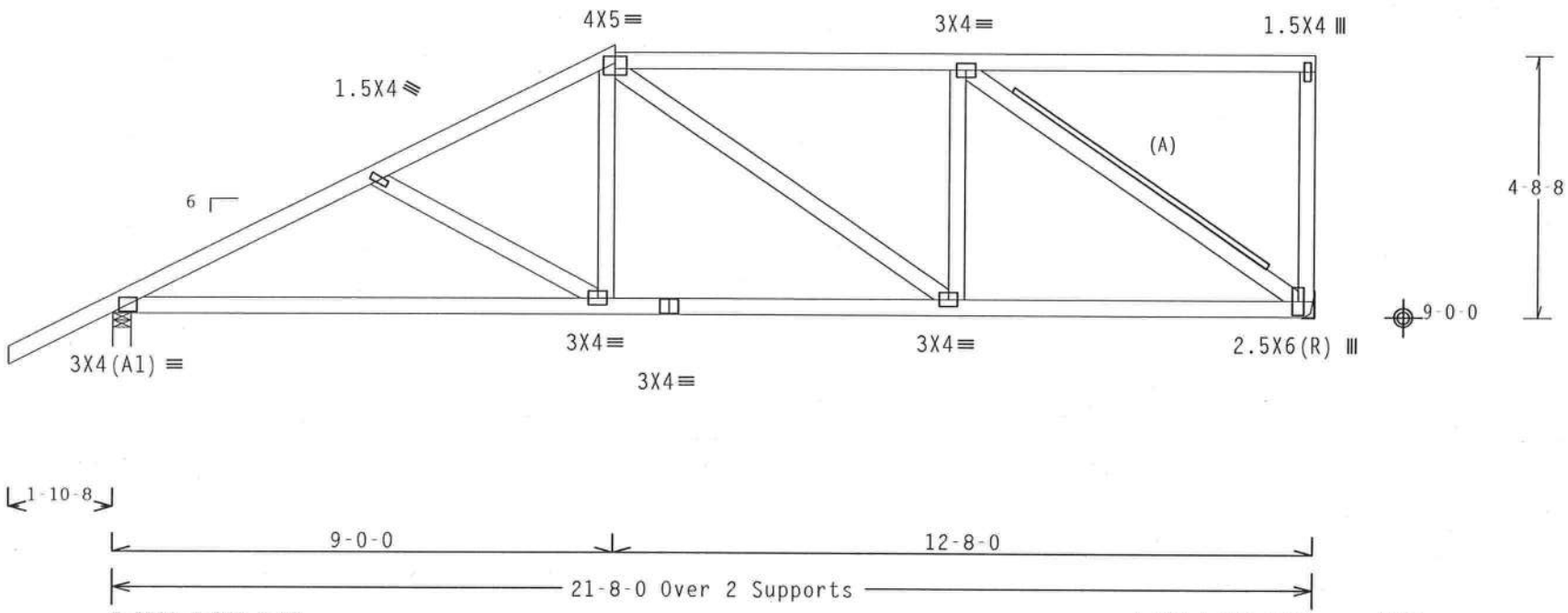

R=1030 U=261 W=4"
RL=185/-70

R=880 U=250 H=Simpson LU26
w/ (4) 10d, 0.148"x1.5" nails in Truss
w/ (6) 16d Common, 0.162"x3.5" nails in Girder
Girder is (2)2X6 min. So.Pine

Design Crit: FBC2007Res/TPI-2002(STD)

PLT TYP. Wave FT/RT=20%(0%)/0(0) 9.02.00 [illegible] QTY:1 FL/-/4/-/-/R/- Scale =.3125"/Ft.

ALPINE
ITW Building Components Group Inc.
Haines City, FL 33844
FL COA #0278

WARNING TRUSSES REQUIRE EXTREME CARE IN FABRICATION, HANDLING, SHIPPING, INSTALLING AND BRACING. REFER TO BCSI (BUILDING COMPONENT SAFETY INFORMATION), PUBLISHED BY TPI (TRUSS PLATE INSTITUTE, 218 NORTH LEE STREET, SUITE 312, ALEXANDRIA, VA, 22314) AND WTCA (WOOD TRUSS COUNCIL OF AMERICA, 6300 ENTERPRISE LANE, MADISON, WI 53719) FOR SAFETY PRACTICES PRIOR TO PERFORMING THESE FUNCTIONS. UNLESS OTHERWISE INDICATED TOP CHORD SHALL HAVE PROPERLY ATTACHED STRUCTURAL PANELS AND BOTTOM CHORD SHALL HAVE A PROPERLY ATTACHED RIGID CEILING.

IMPORTANTFURNISH A COPY OF THIS DESIGN TO THE INSTALLATION CONTRACTOR. ITW BCG, INC. SHALL NOT BE RESPONSIBLE FOR ANY DEVIATION FROM THIS DESIGN; ANY FAILURE TO BUILD THE TRUSS IN CONFORMANCE WITH TPI; OR FABRICATING, HANDLING, SHIPPING, INSTALLING & BRACING OF TRUSSES.
DESIGN CONFORMS WITH APPLICABLE PROVISIONS OF NDS (NATIONAL DESIGN SPEC. BY AF&PA) AND TPI. ITW BCG CONNECTOR PLATES ARE MADE OF 20/18/16GA (W,H/SS/K) ASTM A653 GRADE 40/60 (W, K/H,SS) GALV. STEEL. APPLY PLATES TO EACH FACE OF TRUSS AND, UNLESS OTHERWISE LOCATED ON THIS DESIGN, POSITION PER DRAWINGS 160A-Z. ANY INSPECTION OF PLATES FOLLOWED BY (1) SHALL BE PER ANNEX A3 OF TPI1-2002 SEC.3. A SEAL ON THIS DRAWING INDICATES ACCEPTANCE OF PROFESSIONAL ENGINEERING RESPONSIBILITY SOLELY FOR THE TRUSS COMPONENT DESIGN SHOWN. THE SUITABILITY AND USE OF THIS COMPONENT FOR ANY BUILDING IS THE RESPONSIBILITY OF THE BUILDING DESIGNER PER ANSI/TPI 1 SEC. 2.

DOUGLAS FLEMING LICENSE No. 66648 STATE OF FLORIDA PROFESSIONAL ENGINEER

[illegible] 18 '09

TC LL	20.0 PSF	REF	R8228- 60340
TC DL	10.0 PSF	DATE	12/18/09
BC DL	10.0 PSF	DRW	HCUSR8228 09352046
BC LL	0.0 PSF	HC-ENG	JB/DF
TOT.LD.	40.0 PSF	SEQN-	68221
DUR.FAC.	1.25	FROM	AH
SPACING	24.0"	JREF-	1TXP8228Z01

(9-244--Fill in later EDGLEY -- , ** - E)

Top chord 2x4 SP #2 Dense
Bot chord 2x4 SP #2 Dense
Webs 2x4 SP #3

Roof overhang supports 2.00 psf soffit load.

Bottom chord checked for 10.00 psf non-concurrent live load.

MWFRS loads based on trusses located at least 15.00 ft. from roof edge.

110 mph wind, 15.00 ft mean hgt, ASCE 7-05, CLOSED bldg, not located within 4.50 ft from roof edge, CAT II, EXP C, wind TC DL=5.0 psf, wind BC DL=5.0 psf. Iw=1.00 GCpi(+/-)=0.18

Wind reactions based on MWFRS pressures.

Deflection meets L/240 live and L/180 total load.

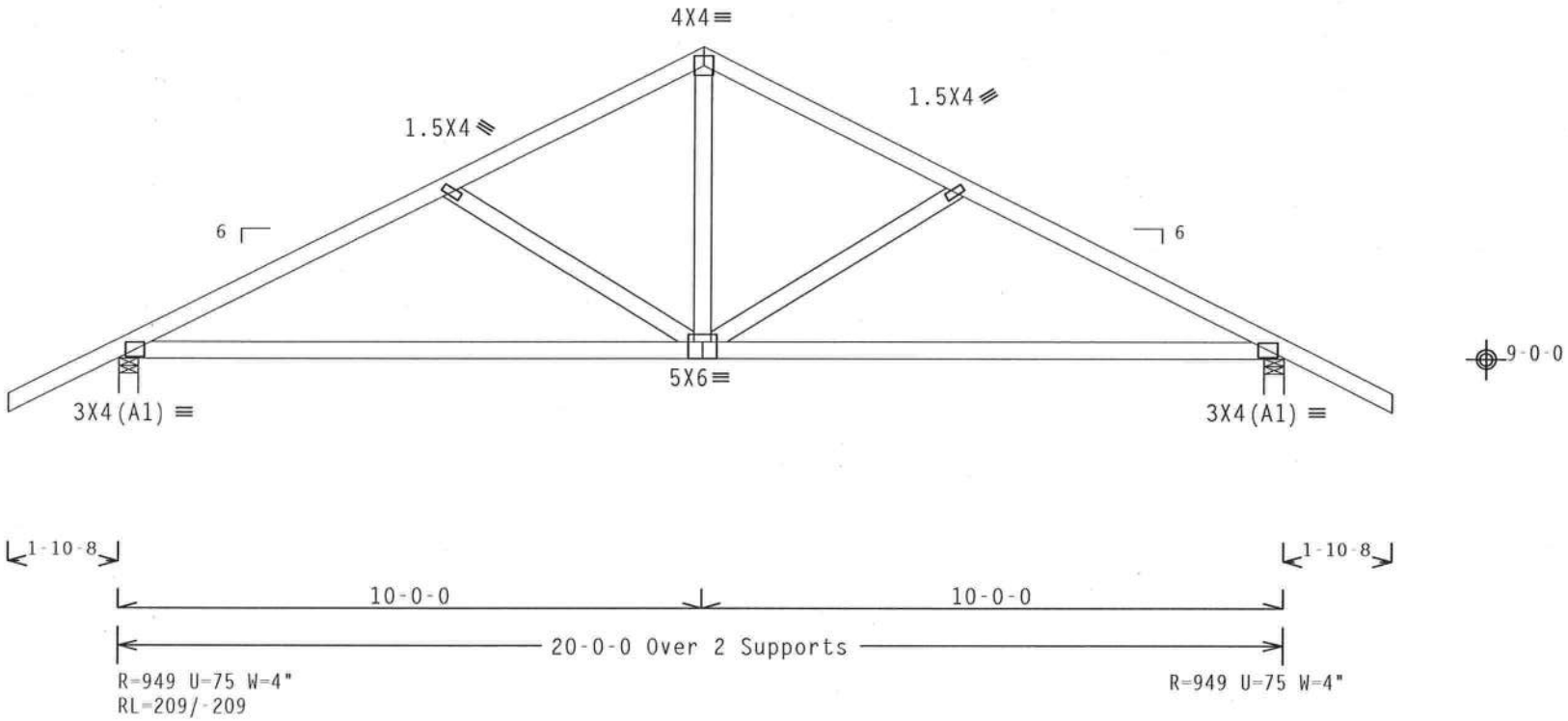

Design Crit: FBC2007Res/TPI-2002(STD)

PLT TYP. Wave | FT/RT=20%(0%)/0(0) | 9.02.00 | QTY:2 | FL/-/4/-/-/R/- | Scale =.3125"/Ft.

ALPINE
ITW Building Components Group Inc.
Haines City, FL 33844
FL COA #0278

WARNING TRUSSES REQUIRE EXTREME CARE IN FABRICATION, HANDLING, SHIPPING, INSTALLING AND BRACING. REFER TO BCSI (BUILDING COMPONENT SAFETY INFORMATION), PUBLISHED BY TPI (TRUSS PLATE INSTITUTE, 218 NORTH LEE STREET, SUITE 312, ALEXANDRIA, VA. 22314) AND WTCA (WOOD TRUSS COUNCIL OF AMERICA, 6300 ENTERPRISE LANE, MADISON, WI 53719) FOR SAFETY PRACTICES PRIOR TO PERFORMING THESE FUNCTIONS. UNLESS OTHERWISE INDICATED TOP CHORD SHALL HAVE PROPERLY ATTACHED STRUCTURAL PANELS AND BOTTOM CHORD SHALL HAVE A PROPERLY ATTACHED RIGID CEILING.

IMPORTANTFURNISH A COPY OF THIS DESIGN TO THE INSTALLATION CONTRACTOR. ITW BCG, INC. SHALL NOT BE RESPONSIBLE FOR ANY DEVIATION FROM THIS DESIGN; ANY FAILURE TO BUILD THE TRUSS IN CONFORMANCE WITH TPI; OR FABRICATING, HANDLING, SHIPPING, INSTALLING & BRACING OF TRUSSES.
DESIGN CONFORMS WITH APPLICABLE PROVISIONS OF NDS (NATIONAL DESIGN SPEC, BY AF&PA) AND TPI. ITW BCG CONNECTOR PLATES ARE MADE OF 20/18/16GA (W,H/SS/K) ASTM A653 GRADE 40/60 (W, K/H,SS) GALV. STEEL. APPLY PLATES TO EACH FACE OF TRUSS AND, UNLESS OTHERWISE LOCATED ON THIS DESIGN, POSITION PER DRAWINGS 160A-Z. ANY INSPECTION OF PLATES FOLLOWED BY (1) SHALL BE PER ANNEX A3 OF TPI1-2002 SEC.3. A SEAL ON THIS DRAWING INDICATES ACCEPTANCE OF PROFESSIONAL ENGINEERING RESPONSIBILITY SOLELY FOR THE TRUSS COMPONENT DESIGN SHOWN. THE SUITABILITY AND USE OF THIS COMPONENT FOR ANY BUILDING IS THE RESPONSIBILITY OF THE BUILDING DESIGNER PER ANSI/TPI 1 SEC. 2.

DOUGLAS FLEMING LICENSE No. 66648 STATE OF FLORIDA PROFESSIONAL ENGINEER
DEC 18 '09

TC LL	20.0 PSF	REF	R8228- 60341
TC DL	10.0 PSF	DATE	12/18/09
BC DL	10.0 PSF	DRW	HCUSR8228 09352018
BC LL	0.0 PSF	HC-ENG	JB/DF *
TOT.LD.	40.0 PSF	SEQN-	68291
DUR.FAC.	1.25	FROM	AH
SPACING	24.0"	JREF-	1TXP8228Z01

(9-244--Fill in later EDGLEY -- , ** - EG2)

Top chord 2x4 SP #2 Dense
Bot chord 2x6 SP #2
Webs 2x4 SP #3

Special loads
------(Lumber Dur.Fac.=1.25 / Plate Dur.Fac.=1.25)
TC - From 62 plf at 0.00 to 62 plf at 10.00
TC - From 62 plf at 10.00 to 62 plf at 21.88
BC - From 20 plf at 0.00 to 20 plf at 20.00
BC - From 4 plf at 20.00 to 4 plf at 21.88
BC - 880 lb Conc. Load at 1.40 , 3.40, 5.40, 7.40
9.40, 10.94
BC - 1839 lb Conc. Load at 12.94

Roof overhang supports 2.00 psf soffit load.

2 COMPLETE TRUSSES REQUIRED

Nail Schedule:0.131"x3" nails
Top Chord: 1 Row @12.00" o.c.
Bot Chord: 1 Row @ 4.25" o.c.
Webs : 1 Row @ 4" o.c.
Use equal spacing between rows and stagger nails in each row to avoid splitting.

110 mph wind, 15.00 ft mean hgt, ASCE 7-05, CLOSED bldg, not located within 4.50 ft from roof edge, CAT II, EXP C, wind TC DL=5.0 psf, wind BC DL=5.0 psf. Iw=1.00 GCpi(+/-)=0.18

Wind reactions based on MWFRS pressures.

Deflection meets L/240 live and L/180 total load.

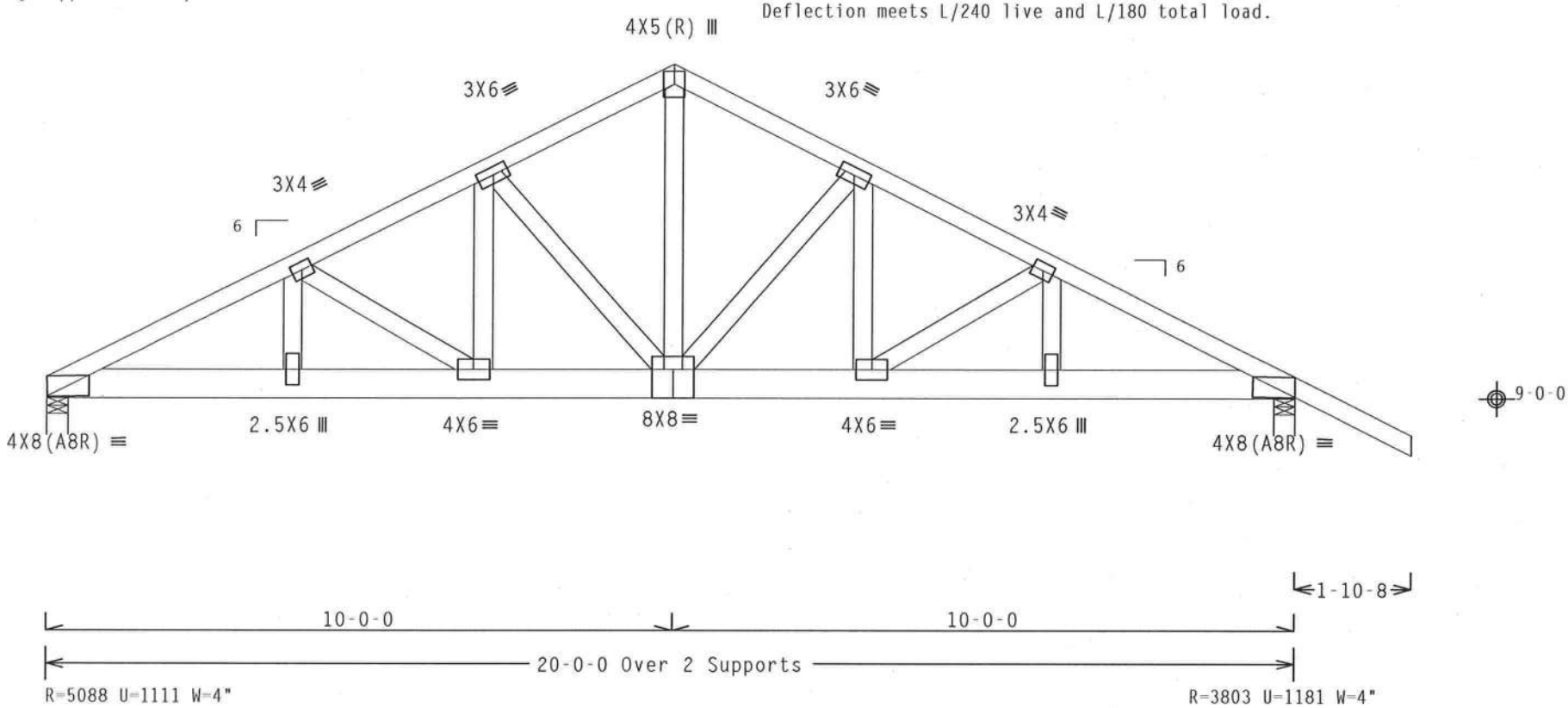

Design Crit: FBC2007Res/TPI-2002(STD)

PLT TYP. Wave | FT/RT=20%(0%)/0(0) | 9.02.00 | QTY:1 | FL/-/4/-/-/R/- | Scale =.375"/Ft.

ALPINE
ITW Building Components Group Inc.
Haines City, FL 33844
FL COA #0278

WARNING TRUSSES REQUIRE EXTREME CARE IN FABRICATION, HANDLING, SHIPPING, INSTALLING AND BRACING. REFER TO BCSI (BUILDING COMPONENT SAFETY INFORMATION), PUBLISHED BY TPI (TRUSS PLATE INSTITUTE, 218 NORTH LEE STREET, SUITE 312, ALEXANDRIA, VA, 22314) AND WTCA (WOOD TRUSS COUNCIL OF AMERICA, 6300 ENTERPRISE LANE, MADISON, WI 53719) FOR SAFETY PRACTICES PRIOR TO PERFORMING THESE FUNCTIONS. UNLESS OTHERWISE INDICATED TOP CHORD SHALL HAVE PROPERLY ATTACHED STRUCTURAL PANELS AND BOTTOM CHORD SHALL HAVE A PROPERLY ATTACHED RIGID CEILING.

IMPORTANTFURNISH A COPY OF THIS DESIGN TO THE INSTALLATION CONTRACTOR. ITW BCG, INC. SHALL NOT BE RESPONSIBLE FOR ANY DEVIATION FROM THIS DESIGN; ANY FAILURE TO BUILD THE TRUSS IN CONFORMANCE WITH TPI; OR FABRICATING, HANDLING, SHIPPING, INSTALLING & BRACING OF TRUSSES. DESIGN CONFORMS WITH APPLICABLE PROVISIONS OF NDS (NATIONAL DESIGN SPEC. BY AF&PA) AND TPI. ITW BCG CONNECTOR PLATES ARE MADE OF 20/18/16GA (W,H/SS/K) ASTM A653 GRADE 40/60 (W, K/H,SS) GALV. STEEL. APPLY PLATES TO EACH FACE OF TRUSS AND, UNLESS OTHERWISE LOCATED ON THIS DESIGN, POSITION PER DRAWINGS 160A-Z. ANY INSPECTION OF PLATES FOLLOWED BY (I) SHALL BE PER ANNEX A3 OF TPI1-2002 SEC.3. A SEAL ON THIS DRAWING INDICATES ACCEPTANCE OF PROFESSIONAL ENGINEERING RESPONSIBILITY SOLELY FOR THE TRUSS COMPONENT DESIGN SHOWN. THE SUITABILITY AND USE OF THIS COMPONENT FOR ANY BUILDING IS THE RESPONSIBILITY OF THE BUILDING DESIGNER PER ANSI/TPI 1 SEC. 2.

DOUGLAS FLEMING LICENSE No. 66648 STATE OF FLORIDA PROFESSIONAL ENGINEER
DEC 18 '09

TC LL	20.0 PSF	REF	R8228- 60342
TC DL	10.0 PSF	DATE	12/18/09
BC DL	10.0 PSF	DRW	HCUSR8228 09352067
BC LL	0.0 PSF	HC-ENG	JB/DF
TOT.LD.	40.0 PSF	SEQN-	68299
DUR.FAC.	1.25	FROM	AH
SPACING	24.0"	JREF-	1TXP8228Z01

(9-244--Fill in later EDGLEY -- , ** - EG1)

Top chord 2x4 SP #2 Dense
Bot chord 2x6 SP #2 :B2 2x6 SP SS:
Webs 2x4 SP #3 :W7 2x4 SP #2 Dense:
:Lt Wedge 2x4 SP #3::Rt Wedge 2x4 SP #3:

Special loads
------(Lumber Dur.Fac.=1.25 / Plate Dur.Fac.=1.25)
TC - From 62 plf at -1.88 to 62 plf at 10.00
TC - From 62 plf at 10.00 to 62 plf at 20.00
BC - From 4 plf at -1.88 to 4 plf at 0.00
BC - From 20 plf at 0.00 to 20 plf at 20.00
BC - 5374 lb Conc. Load at 12.73
BC - 1307 lb Conc. Load at 14.73
BC - 1362 lb Conc. Load at 16.73
BC - 1361 lb Conc. Load at 17.94

Roof overhang supports 2.00 psf soffit load.

2 COMPLETE TRUSSES REQUIRED

Nail Schedule:0.131"x3" nails
Top Chord: 1 Row @12.00" o.c.
Bot Chord: 1 Row @ 3.25" o.c.
Webs : 1 Row @ 4" o.c.
Use equal spacing between rows and stagger nails in each row to avoid splitting.
4" o.c. spacing of nails perpendicular and parallel to grain required in area over bearings greater than 4"

110 mph wind, 15.00 ft mean hgt, ASCE 7-05, CLOSED bldg, not located within 4.50 ft from roof edge, CAT II, EXP C, wind TC DL=5.0 psf, wind BC DL=5.0 psf. Iw=1.00 GCpi(+/-)=0.18

Wind reactions based on MWFRS pressures.

Deflection meets L/240 live and L/180 total load.

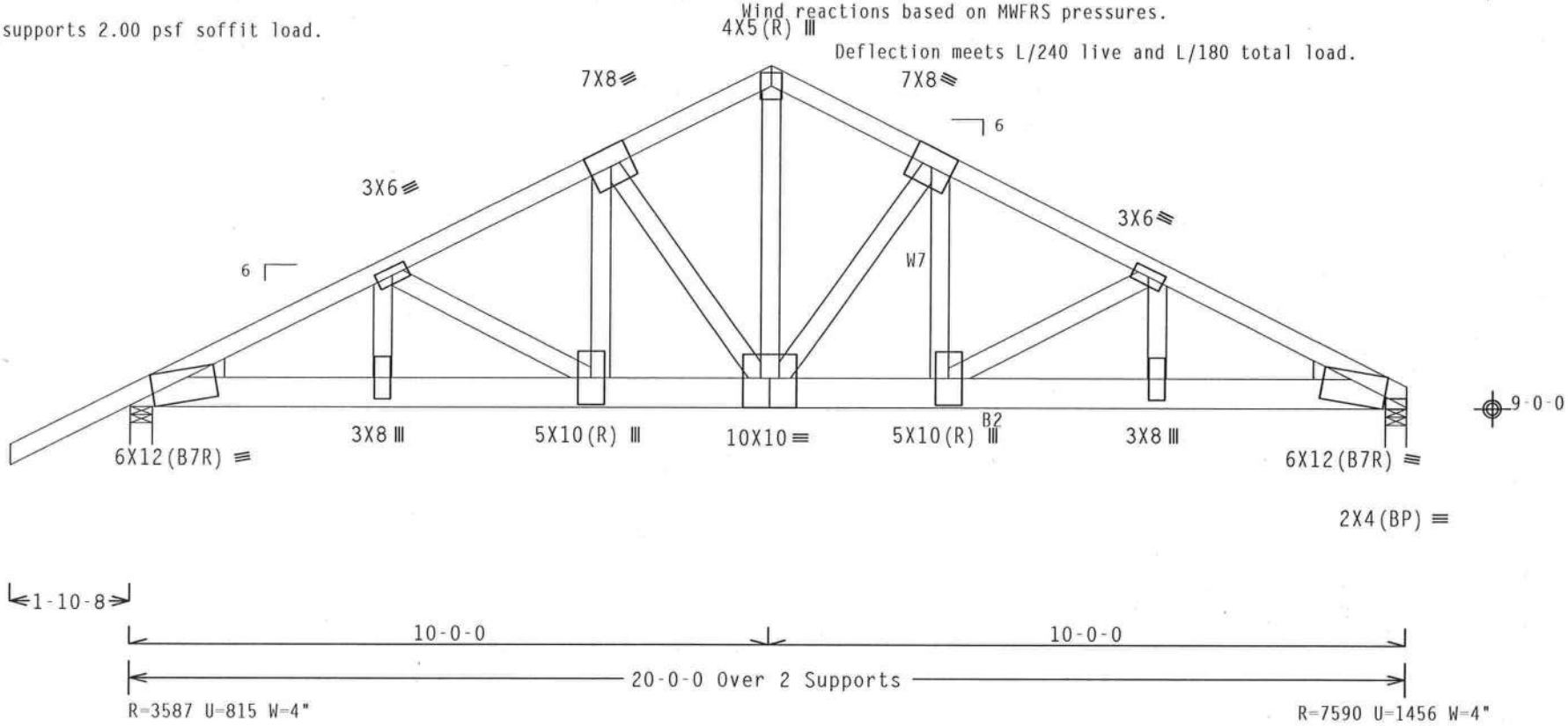

Design Crit: FBC2007Res/TPI-2002(STD)

PLT TYP. Wave | FT/RT=20%(0%)/0(0) | 9.02.00 [illegible] | QTY:1 | FL/-/4/-/-/R/- | Scale =.375"/Ft.

ALPINE
ITW Building Components Group Inc.
Haines City, FL 33844
FL COA #2278

WARNING TRUSSES REQUIRE EXTREME CARE IN FABRICATION, HANDLING, SHIPPING, INSTALLING AND BRACING. REFER TO BCSI (BUILDING COMPONENT SAFETY INFORMATION), PUBLISHED BY TPI (TRUSS PLATE INSTITUTE, 218 NORTH LEE STREET, SUITE 312, ALEXANDRIA, VA, 22314) AND WTCA (WOOD TRUSS COUNCIL OF AMERICA, 6300 ENTERPRISE LANE, MADISON, WI 53719) FOR SAFETY PRACTICES PRIOR TO PERFORMING THESE FUNCTIONS. UNLESS OTHERWISE INDICATED TOP CHORD SHALL HAVE PROPERLY ATTACHED STRUCTURAL PANELS AND BOTTOM CHORD SHALL HAVE A PROPERLY ATTACHED RIGID CEILING.

IMPORTANTFURNISH A COPY OF THIS DESIGN TO THE INSTALLATION CONTRACTOR. ITW BCG, INC. SHALL NOT BE RESPONSIBLE FOR ANY DEVIATION FROM THIS DESIGN; ANY FAILURE TO BUILD THE TRUSS IN CONFORMANCE WITH TPI; OR FABRICATING, HANDLING, SHIPPING, INSTALLING & BRACING OF TRUSSES.
DESIGN CONFORMS WITH APPLICABLE PROVISIONS OF NDS (NATIONAL DESIGN SPEC. BY AF&PA) AND TPI. ITW BCG CONNECTOR PLATES ARE MADE OF 20/18/16GA (W,H/SS/K) ASTM A653 GRADE 40/60 (W, K/H,SS) GALV. STEEL. APPLY PLATES TO EACH FACE OF TRUSS AND, UNLESS OTHERWISE LOCATED ON THIS DESIGN, POSITION PER DRAWINGS 160A-Z. ANY INSPECTION OF PLATES FOLLOWED BY (1) SHALL BE PER ANNEX A3 OF TPI1-2002 SEC.3. A SEAL ON THIS DRAWING INDICATES ACCEPTANCE OF PROFESSIONAL ENGINEERING RESPONSIBILITY SOLELY FOR THE TRUSS COMPONENT DESIGN SHOWN. THE SUITABILITY AND USE OF THIS COMPONENT FOR ANY BUILDING IS THE RESPONSIBILITY OF THE BUILDING DESIGNER PER ANSI/TPI 1 SEC. 2.

DOUGLAS FLEMING LICENSE No. 66648 STATE OF FLORIDA PROFESSIONAL ENGINEER
[illegible]18 '09

TC LL	20.0 PSF	REF	R8228- 60343
TC DL	10.0 PSF	DATE	12/18/09
BC DL	10.0 PSF	DRW	HCUSR8228 09352075
BC LL	0.0 PSF	HC-ENG	JB/DF
TOT.LD.	40.0 PSF	SEQN-	68305
DUR.FAC.	1.25	FROM	AH
SPACING	24.0"	JREF-	1TXP8228Z01

(9-244--Fill in later EDGLEY -- , ** - HF2)

THIS DWG PREPARED FROM COMPUTER INPUT (LOADS & DIMENSIONS) SUBMITTED BY TRUSS MFR.

Top chord 2x4 SP #2 Dense
Bot chord 2x4 SP #2 Dense
Webs 2x4 SP #3

THIS DESIGN IS NOT INTENDED TO BE USED AS A STAND ALONE TRUSS. THIS IS INTENDED TO BE USED AS A JACKSCAB

NOTE: THIS DESIGN IS NOT TO BE USED AS A ROOF TRUSS. IT IS ONLY TO BE USED AS A ROOF HIP FRAME.
SEE DETAIL HIPFRAME0109 FOR MORE INFORMATION.

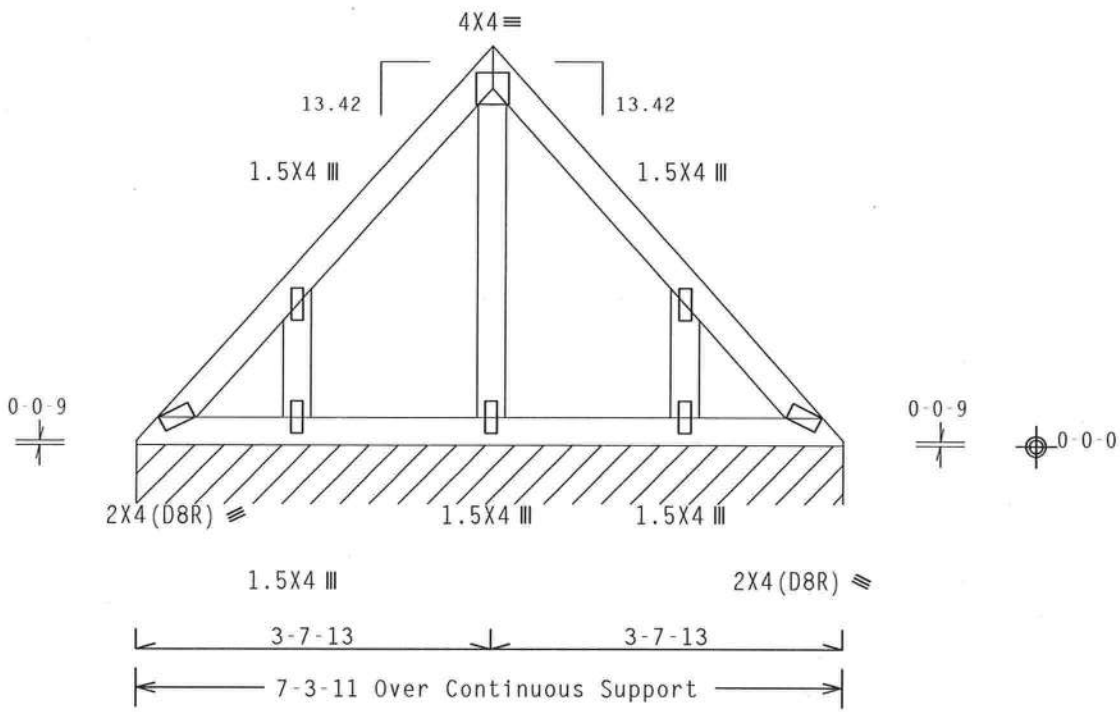

Design Crit: FBC2007Res/TPI-2002(STD)

PLT TYP. Wave | FT/RT=20%(0%)/0(0) | 9.02.00 | QTY:1 | FL/-/4/-/-/R/- | Scale =.5"/Ft.

ALPINE
ITW Building Components Group Inc.
Haines City, FL 33844
FL COA #0278

WARNING TRUSSES REQUIRE EXTREME CARE IN FABRICATION, HANDLING, SHIPPING, INSTALLING AND BRACING. REFER TO BCSI (BUILDING COMPONENT SAFETY INFORMATION), PUBLISHED BY TPI (TRUSS PLATE INSTITUTE, 218 NORTH LEE STREET, SUITE 312, ALEXANDRIA, VA, 22314) AND WICA (WOOD TRUSS COUNCIL OF AMERICA, 6300 ENTERPRISE LANE, MADISON, WI 53719) FOR SAFETY PRACTICES PRIOR TO PERFORMING THESE FUNCTIONS. UNLESS OTHERWISE INDICATED TOP CHORD SHALL HAVE PROPERLY ATTACHED STRUCTURAL PANELS AND BOTTOM CHORD SHALL HAVE A PROPERLY ATTACHED RIGID CEILING.

IMPORTANTFURNISH A COPY OF THIS DESIGN TO THE INSTALLATION CONTRACTOR. ITW BCG, INC. SHALL NOT BE RESPONSIBLE FOR ANY DEVIATION FROM THIS DESIGN; ANY FAILURE TO BUILD THE TRUSS IN CONFORMANCE WITH TPI; OR FABRICATING, HANDLING, SHIPPING, INSTALLING & BRACING OF TRUSSES.
DESIGN CONFORMS WITH APPLICABLE PROVISIONS OF NDS (NATIONAL DESIGN SPEC. BY AF&PA) AND TPI. ITW BCG CONNECTOR PLATES ARE MADE OF 20/18/16GA (W,H/SS/K) ASTM A653 GRADE 40/60 (W, K/H,SS) GALV. STEEL. APPLY PLATES TO EACH FACE OF TRUSS AND, UNLESS OTHERWISE LOCATED ON THIS DESIGN, POSITION PER DRAWINGS 160A-Z. ANY INSPECTION OF PLATES FOLLOWED BY (1) SHALL BE PER ANNEX A3 OF TPI1-2002 SEC.3. A SEAL ON THIS DRAWING INDICATES ACCEPTANCE OF PROFESSIONAL ENGINEERING RESPONSIBILITY SOLELY FOR THE TRUSS COMPONENT DESIGN SHOWN. THE SUITABILITY AND USE OF THIS COMPONENT FOR ANY BUILDING IS THE RESPONSIBILITY OF THE BUILDING DESIGNER PER ANSI/TPI 1 SEC. 2.

DOUGLAS FLEMING LICENSE No. 66648 STATE OF FLORIDA PROFESSIONAL ENGINEER

18 '09

TC LL	20.0 PSF	REF	R8228- 60344
TC DL	10.0 PSF	DATE	12/18/09
BC DL	10.0 PSF	DRW	HCUSR8228 09352069
BC LL	0.0 PSF	HC-ENG	JB/DF
TOT.LD.	40.0 PSF	SEQN-	68348
DUR.FAC.	1.25	FROM	AH
SPACING	24.0"	JREF-	1TXP8228Z01

(9-244--Fill in later EDGLEY -- , ** - HF1)

Top chord 2x4 SP #2 Dense
Bot chord 2x4 SP #2 Dense
Webs 2x4 SP #3

THIS DESIGN IS NOT INTENDED TO BE USED AS A STAND-ALONE TRUSS. THIS IS INTENDED TO BE USED AS A JACKSCAB

NOTE: THIS DESIGN IS NOT TO BE USED AS A ROOF TRUSS. IT IS ONLY TO BE USED AS A ROOF HIP FRAME.
SEE DETAIL HIPFRAME0109 FOR MORE INFORMATION.

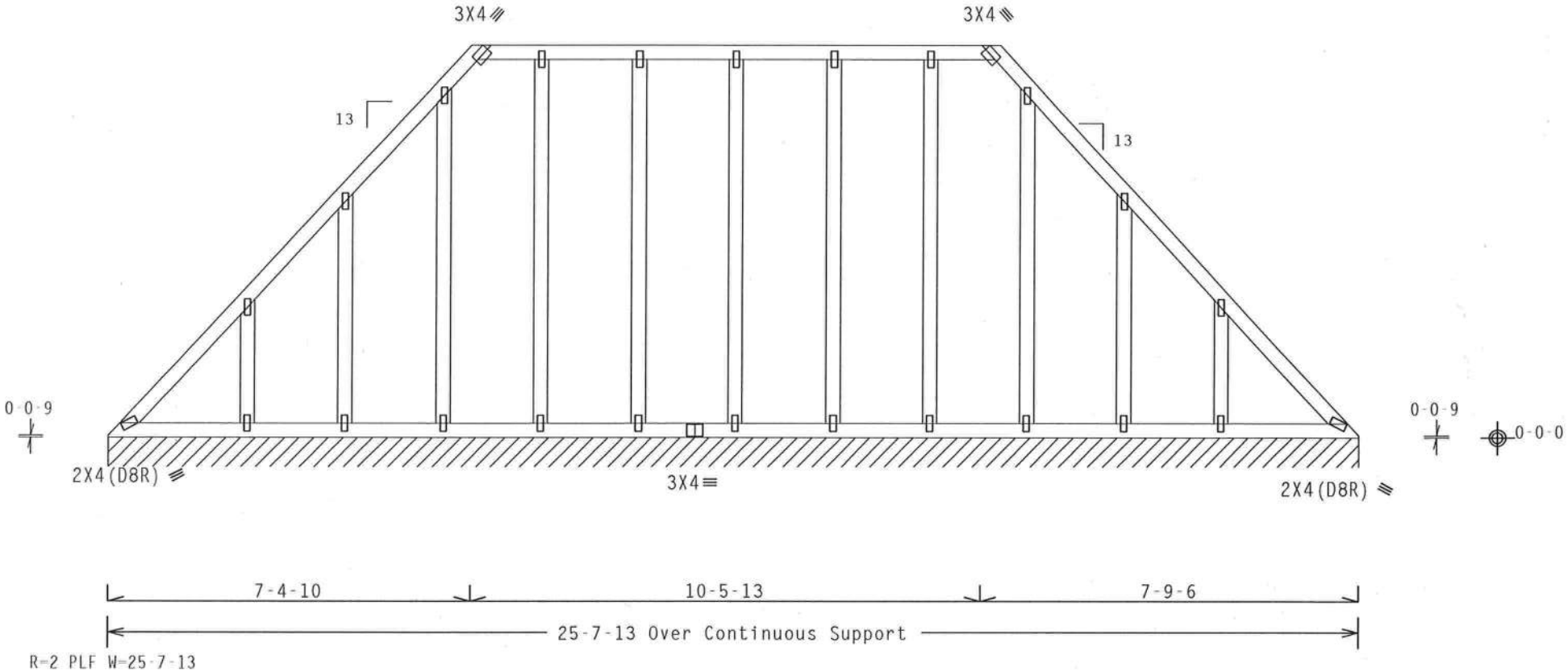

Note: All Plates Are 1.5X4 Except As Shown.

Design Crit: FBC2007Res/TPI-2002(STD)

PLT TYP. Wave FT/RT=20%(0%)/0(0) 9.02.00 [illegible] QTY:1 FL/-/4/-/-/R/- Scale =.3125"/Ft.

ALPINE
ITW Building Components Group Inc.
Haines City, FL 33844
FL COA #0278

WARNING TRUSSES REQUIRE EXTREME CARE IN FABRICATION, HANDLING, SHIPPING, INSTALLING AND BRACING. REFER TO BCSI (BUILDING COMPONENT SAFETY INFORMATION), PUBLISHED BY TPI (TRUSS PLATE INSTITUTE, 218 NORTH LEE STREET, SUITE 312, ALEXANDRIA, VA, 22314) AND WTCA (WOOD TRUSS COUNCIL OF AMERICA, 6300 ENTERPRISE LANE, MADISON, WI 53719) FOR SAFETY PRACTICES PRIOR TO PERFORMING THESE FUNCTIONS. UNLESS OTHERWISE INDICATED TOP CHORD SHALL HAVE PROPERLY ATTACHED STRUCTURAL PANELS AND BOTTOM CHORD SHALL HAVE A PROPERLY ATTACHED RIGID CEILING.

IMPORTANTFURNISH A COPY OF THIS DESIGN TO THE INSTALLATION CONTRACTOR. ITW BCG, INC. SHALL NOT BE RESPONSIBLE FOR ANY DEVIATION FROM THIS DESIGN; ANY FAILURE TO BUILD THE TRUSS IN CONFORMANCE WITH TPI; OR FABRICATING, HANDLING, SHIPPING, INSTALLING & BRACING OF TRUSSES.
DESIGN CONFORMS WITH APPLICABLE PROVISIONS OF NDS (NATIONAL DESIGN SPEC. BY AF&PA) AND TPI. ITW BCG CONNECTOR PLATES ARE MADE OF 20/18/16GA (W,H/SS/K) ASTM A653 GRADE 40/60 (W, K/H,SS) GALV. STEEL. APPLY PLATES TO EACH FACE OF TRUSS AND, UNLESS OTHERWISE LOCATED ON THIS DESIGN, POSITION PER DRAWINGS 160A-Z. ANY INSPECTION OF PLATES FOLLOWED BY (1) SHALL BE PER ANNEX A3 OF TPI1-2002 SEC.3. A SEAL ON THIS DRAWING INDICATES ACCEPTANCE OF PROFESSIONAL ENGINEERING RESPONSIBILITY SOLELY FOR THE TRUSS COMPONENT DESIGN SHOWN. THE SUITABILITY AND USE OF THIS COMPONENT FOR ANY BUILDING IS THE RESPONSIBILITY OF THE BUILDING DESIGNER PER ANSI/TPI 1 SEC. 2.

DOUGLAS FLEMING LICENSE No. 66648 STATE OF FLORIDA PROFESSIONAL ENGINEER

[illegible]18 '09

TC LL	20.0 PSF	REF R8228- 60345
TC DL	10.0 PSF	DATE 12/18/09
BC DL	10.0 PSF	DRW HCUSR8228 09352070
BC LL	0.0 PSF	HC-ENG JB/DF
TOT.LD.	40.0 PSF	SEQN- 68345
DUR.FAC.	1.25	
SPACING	24.0"	JREF- 1TXP8228Z01

(9-244--Fill in later EDGLEY -- , ** - HF1A)

Top chord 2x4 SP #2 Dense
Bot chord 2x4 SP #2 Dense
Webs 2x4 SP #3

THIS DESIGN IS NOT INTENDED TO BE USED AS A STAND ALONE TRUSS. THIS IS INTENDED TO BE USED AS A JACKSCAB

NOTE: THIS DESIGN IS NOT TO BE USED AS A ROOF TRUSS. IT IS ONLY TO BE USED AS A ROOF HIP FRAME. SEE DETAIL HIPFRAME0109 FOR MORE INFORMATION.

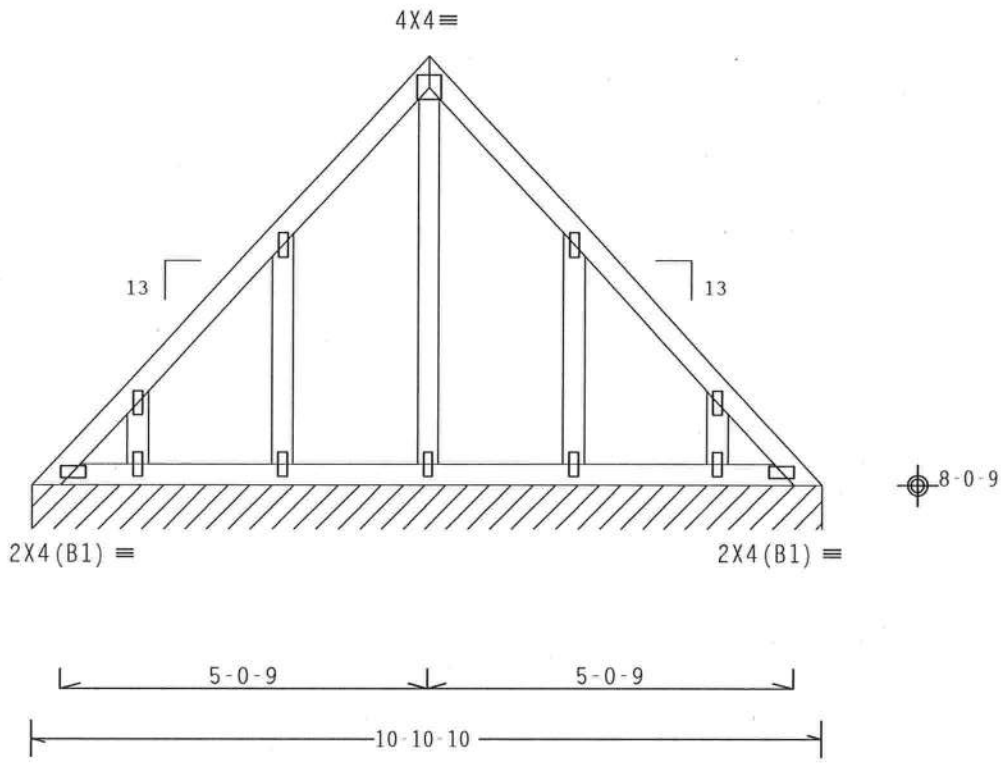

Note: All Plates Are 1.5X4 Except As Shown.

Design Crit: FBC2007Res/TPI-2002(STD)

PLT TYP. Wave FT/RT=20%(0%)/0(0) 9.02.00 QTY:1 FL/-/4/-/-/R/- Scale =.375"/Ft.

ALPINE
ITW Building Components Group Inc.
Haines City, FL 33844
FL COA #0278

WARNING TRUSSES REQUIRE EXTREME CARE IN FABRICATION, HANDLING, SHIPPING, INSTALLING AND BRACING. REFER TO BCSI (BUILDING COMPONENT SAFETY INFORMATION), PUBLISHED BY TPI (TRUSS PLATE INSTITUTE, 218 NORTH LEE STREET, SUITE 312, ALEXANDRIA, VA, 22314) AND WICA (WOOD TRUSS COUNCIL OF AMERICA, 6300 ENTERPRISE LANE, MADISON, WI 53719) FOR SAFETY PRACTICES PRIOR TO PERFORMING THESE FUNCTIONS. UNLESS OTHERWISE INDICATED TOP CHORD SHALL HAVE PROPERLY ATTACHED STRUCTURAL PANELS AND BOTTOM CHORD SHALL HAVE A PROPERLY ATTACHED RIGID CEILING.

IMPORTANT FURNISH A COPY OF THIS DESIGN TO THE INSTALLATION CONTRACTOR. ITW BCG, INC. SHALL NOT BE RESPONSIBLE FOR ANY DEVIATION FROM THIS DESIGN; ANY FAILURE TO BUILD THE TRUSS IN CONFORMANCE WITH TPI; OR FABRICATING, HANDLING, SHIPPING, INSTALLING & BRACING OF TRUSSES. DESIGN CONFORMS WITH APPLICABLE PROVISIONS OF NDS (NATIONAL DESIGN SPEC. BY AF&PA) AND TPI. ITW BCG CONNECTOR PLATES ARE MADE OF 20/18/16GA (W,H/SS/K) ASTM A653 GRADE 40/60 (W, K/H,SS) GALV. STEEL. APPLY PLATES TO EACH FACE OF TRUSS AND, UNLESS OTHERWISE LOCATED ON THIS DESIGN, POSITION PER DRAWINGS 160A-Z. ANY INSPECTION OF PLATES FOLLOWED BY (1) SHALL BE PER ANNEX A3 OF TPI1-2002 SEC.3. A SEAL ON THIS DRAWING INDICATES ACCEPTANCE OF PROFESSIONAL ENGINEERING RESPONSIBILITY SOLELY FOR THE TRUSS COMPONENT DESIGN SHOWN. THE SUITABILITY AND USE OF THIS COMPONENT FOR ANY BUILDING IS THE RESPONSIBILITY OF THE BUILDING DESIGNER PER ANSI/TPI 1 SEC. 2.

DOUGLAS FLEMING LICENSE No. 66648 STATE OF FLORIDA PROFESSIONAL ENGINEER

Dec 18 '09

TC LL	20.0 PSF	REF R8228- 60346
TC DL	10.0 PSF	DATE 12/18/09
BC DL	10.0 PSF	DRW HCUSR8228 09352071
BC LL	0.0 PSF	HC-ENG JB/DF
TOT.LD.	40.0 PSF	SEQN- 68354
DUR.FAC.	1.25	
SPACING	24.0"	JREF- 1TXP8228Z01

(9-244--Fill in later EDGLEY -- , ** - HF3)

Top chord 2x4 SP #2 Dense
Bot chord 2x4 SP #2 Dense
Webs 2x4 SP #3

THIS DESIGN IS NOT INTENDED TO BE USED AS A STAND ALONE TRUSS. THIS IS INTENDED TO BE USED AS A JACKSCAB

NOTE: THIS DESIGN IS NOT TO BE USED AS A ROOF TRUSS. IT IS ONLY TO BE USED AS A ROOF HIP FRAME.
SEE DETAIL HIPFRAME0109 FOR MORE INFORMATION.

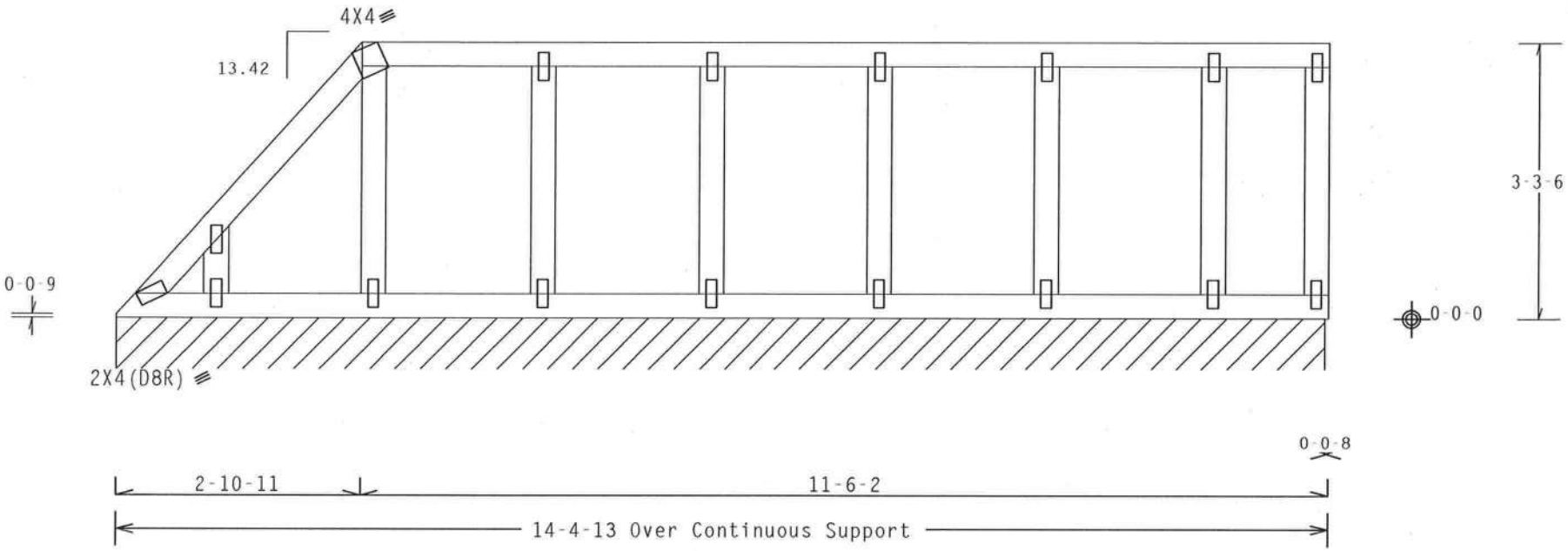

Note: All Plates Are 1.5X4 Except As Shown.

Design Crit: FBC2007Res/TPI-2002(STD)

PLT TYP. Wave FT/RT=20%(0%)/0(0) 9.02.00.08 Mod 16 QTY:1 FL/-/4/-/-/R/- Scale =.5"/Ft.

ALPINE
ITW Building Components Group Inc.
Haines City, FL 33844
FL COA #0278

WARNING TRUSSES REQUIRE EXTREME CARE IN FABRICATION, HANDLING, SHIPPING, INSTALLING AND BRACING. REFER TO BCSI (BUILDING COMPONENT SAFETY INFORMATION), PUBLISHED BY TPI (TRUSS PLATE INSTITUTE, 218 NORTH LEE STREET, SUITE 312, ALEXANDRIA, VA, 22314) AND WTCA (WOOD TRUSS COUNCIL OF AMERICA, 6300 ENTERPRISE LANE, MADISON, WI 53719) FOR SAFETY PRACTICES PRIOR TO PERFORMING THESE FUNCTIONS. UNLESS OTHERWISE INDICATED TOP CHORD SHALL HAVE PROPERLY ATTACHED STRUCTURAL PANELS AND BOTTOM CHORD SHALL HAVE A PROPERLY ATTACHED RIGID CEILING.

IMPORTANTFURNISH A COPY OF THIS DESIGN TO THE INSTALLATION CONTRACTOR. ITW BCG, INC. SHALL NOT BE RESPONSIBLE FOR ANY DEVIATION FROM THIS DESIGN; ANY FAILURE TO BUILD THE TRUSS IN CONFORMANCE WITH TPI; OR FABRICATING, HANDLING, SHIPPING, INSTALLING & BRACING OF TRUSSES.
DESIGN CONFORMS WITH APPLICABLE PROVISIONS OF NDS (NATIONAL DESIGN SPEC. BY AF&PA) AND TPI. ITW BCG CONNECTOR PLATES ARE MADE OF 20/18/16GA (W.H/SS/K) ASTM A653 GRADE 40/60 (W. K/H.SS) GALV. STEEL. APPLY PLATES TO EACH FACE OF TRUSS AND, UNLESS OTHERWISE LOCATED ON THIS DESIGN, POSITION PER DRAWINGS 160A-Z. ANY INSPECTION OF PLATES FOLLOWED BY (1) SHALL BE PER ANNEX A3 OF TPI1-2002 SEC.3. A SEAL ON THIS DRAWING INDICATES ACCEPTANCE OF PROFESSIONAL ENGINEERING RESPONSIBILITY SOLELY FOR THE TRUSS COMPONENT DESIGN SHOWN. THE SUITABILITY AND USE OF THIS COMPONENT FOR ANY BUILDING IS THE RESPONSIBILITY OF THE BUILDING DESIGNER PER ANSI/TPI 1 SEC. 2.

DOUGLAS FLEMING LICENSE No. 66648 STATE OF FLORIDA PROFESSIONAL ENGINEER

DEC 18 '09

TC LL	20.0 PSF	REF	R8228- 60347
TC DL	10.0 PSF	DATE	12/18/09
BC DL	10.0 PSF	DRW	HCUSR8228 09352072
BC LL	0.0 PSF	HC-ENG	JB/DF
TOT.LD.	40.0 PSF	SEQN-	68351
DUR.FAC.	1.25	FROM	AH
SPACING	24.0"	JREF-	1TXP8228Z01

(9-244--Fill in later EDGLEY -- , ** - H7G)

Top chord 2x4 SP #2 Dense
Bot chord 2x6 SP #2
Webs 2x4 SP #3

110 mph wind, 15.00 ft mean hgt, ASCE 7-05, CLOSED bldg, not located within 4.50 ft from roof edge, CAT II, EXP C, wind TC DL=5.0 psf, wind BC DL=5.0 psf. Iw=1.00 GCpi(+/-)=0.18

Wind reactions based on MWFRS pressures.

Roof overhang supports 2.00 psf soffit load.

H = recommended connection based on manufacturer tested capacities and calculations. Conditions may exist that require different connections than indicated. Refer to manufacturer publication for additional information.

Deflection meets L/240 live and L/180 total load.

Special loads
------(Lumber Dur.Fac.=1.25 / Plate Dur.Fac.=1.25)

TC -	From	62 plf at -1.87	to	62 plf at 7.00
TC -	From	62 plf at 7.00	to	62 plf at 12.67
BC -	From	4 plf at -1.87	to	4 plf at 0.00
BC -	From	20 plf at 0.00	to	20 plf at 12.67

TC - 444 lb Conc. Load at 7.03
TC - 195 lb Conc. Load at 9.06 , 11.06
BC - 491 lb Conc. Load at 7.03
BC - 131 lb Conc. Load at 9.06 , 11.06

Right end vertical not exposed to wind pressure.

In lieu of structural panels use purlins to brace all flat TC @ 24" OC.

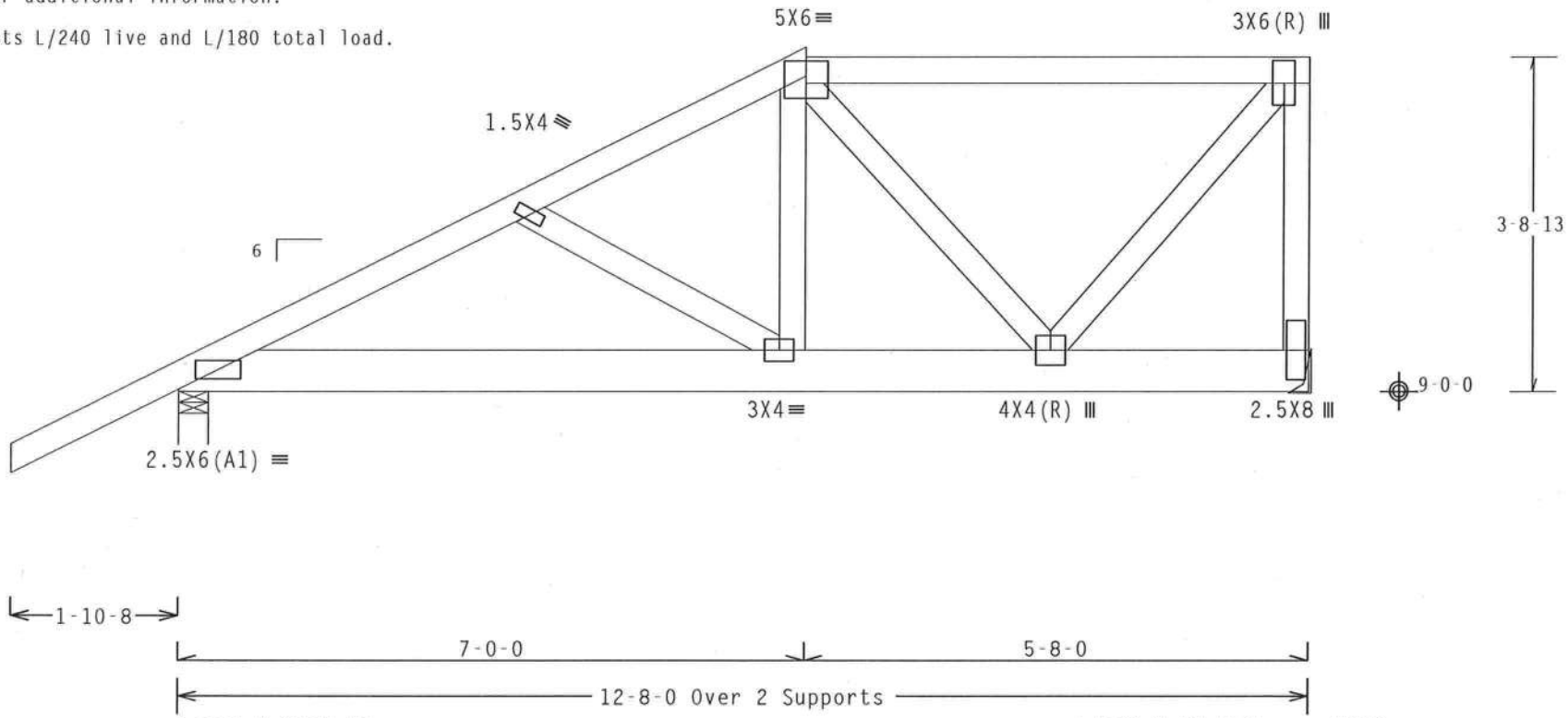

R=1221 U=366 W=4"

R=1536 U=437 H=Simpson HUS26
w/ (4) 10d Common, 0.148"x3.0" nails in Truss
w/ (14) 10d, 0.148"x1.5" nails in Girder
Girder is (1)2X6 min. So.Pine

Design Crit: FBC2007Res/TPI-2002(STD)

PLT TYP. Wave | FT/RT=20%(0%)/0(0) | 9.02.00.061.16 | QTY:1 | FL/-/4/-/-/R/- | Scale =.5"/Ft.

ALPINE
ITW Building Components Group Inc.
Haines City, FL 33844
FL COA #0278

DOUGLAS FLEMING LICENSE No. 66648 STATE OF FLORIDA PROFESSIONAL ENGINEER

18 '09

TC LL	20.0 PSF	REF	R8228- 60348
TC DL	10.0 PSF	DATE	12/18/09
BC DL	10.0 PSF	DRW	HCUSR8228 09352059
BC LL	0.0 PSF	HC-ENG	JB/DF
TOT.LD.	40.0 PSF	SEQN-	68311
DUR.FAC.	1.25	FROM	AH
SPACING	24.0"	JREF-	1TXP8228Z01

(9-244--Fill in later EDGLEY -- , ** - H9G)

Top chord 2x4 SP #2 Dense
Bot chord 2x4 SP #2 Dense
Webs 2x4 SP #3

Roof overhang supports 2.00 psf soffit load.

H = recommended connection based on manufacturer tested capacities and calculations. Conditions may exist that require different connections than indicated. Refer to manufacturer publication for additional information.

In lieu of structural panels use purlins to brace all flat TC @ 24" OC.

Bottom chord checked for 10.00 psf non-concurrent live load.

MWFRS loads based on trusses located at least 15.00 ft. from roof edge.

110 mph wind, 15.00 ft mean hgt, ASCE 7-05, CLOSED bldg, not located within 4.50 ft from roof edge, CAT II, EXP C, wind TC DL=5.0 psf, wind BC DL=5.0 psf. Iw=1.00 GCpi(+/-)=0.18

Wind reactions based on MWFRS pressures.

Right end vertical not exposed to wind pressure.

Deflection meets L/240 live and L/180 total load.

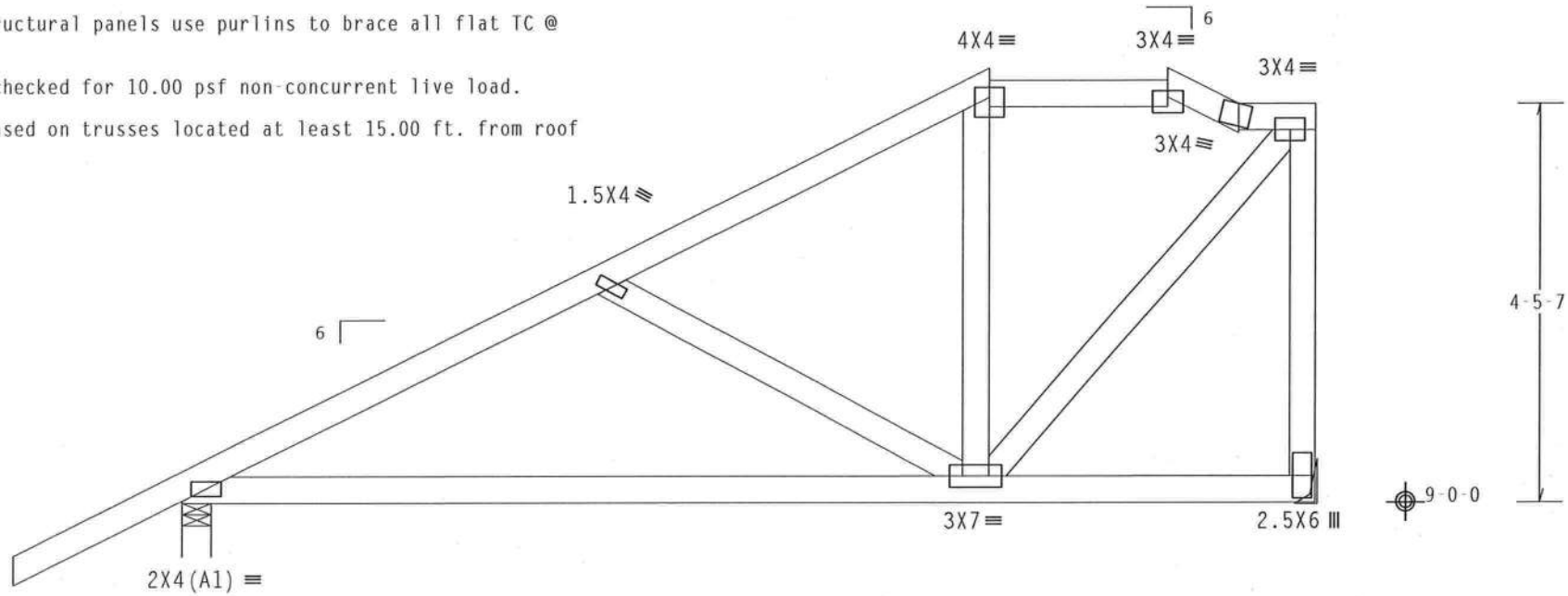

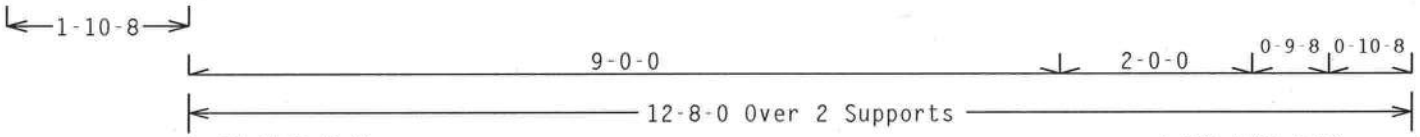

R=664 U=71 W=4"
RL=126/-78

R=505 U=95 H=Simpson LUS24
w/ (2) 10d Common, 0.148"x3.0" nails in Truss
w/ (4) 10d, 0.148"x1.5" nails in Girder
Girder is (1)2X0 min. So.Pine

Design Crit: FBC2007Res/TPI-2002(STD)

PLT TYP. Wave | FT/RT=20%(0%)/0(0) | 9.02.00 | QTY:1 | FL/-/4/-/-/R/- | Scale =.5"/Ft.

ALPINE
ITW Building Components Group Inc.
Haines City, FL 33844
FL COA #0 278

WARNING TRUSSES REQUIRE EXTREME CARE IN FABRICATION, HANDLING, SHIPPING, INSTALLING AND BRACING. REFER TO BCSI (BUILDING COMPONENT SAFETY INFORMATION), PUBLISHED BY TPI (TRUSS PLATE INSTITUTE, 218 NORTH LEE STREET, SUITE 312, ALEXANDRIA, VA. 22314) AND WTCA (WOOD TRUSS COUNCIL OF AMERICA, 6300 ENTERPRISE LANE, MADISON, WI 53719) FOR SAFETY PRACTICES PRIOR TO PERFORMING THESE FUNCTIONS. UNLESS OTHERWISE INDICATED TOP CHORD SHALL HAVE PROPERLY ATTACHED STRUCTURAL PANELS AND BOTTOM CHORD SHALL HAVE A PROPERLY ATTACHED RIGID CEILING.

IMPORTANT FURNISH A COPY OF THIS DESIGN TO THE INSTALLATION CONTRACTOR. ITW BCG, INC. SHALL NOT BE RESPONSIBLE FOR ANY DEVIATION FROM THIS DESIGN; ANY FAILURE TO BUILD THE TRUSS IN CONFORMANCE WITH TPI; OR FABRICATING, HANDLING, SHIPPING, INSTALLING & BRACING OF TRUSSES. DESIGN CONFORMS WITH APPLICABLE PROVISIONS OF NDS (NATIONAL DESIGN SPEC. BY AF&PA) AND TPI. ITW BCG CONNECTOR PLATES ARE MADE OF 20/18/16GA (W,H/SS/K) ASTM A653 GRADE 40/60 (W, K/H,SS) GALV. STEEL. APPLY PLATES TO EACH FACE OF TRUSS AND, UNLESS OTHERWISE LOCATED ON THIS DESIGN, POSITION PER DRAWINGS 160A-Z. ANY INSPECTION OF PLATES FOLLOWED BY (1) SHALL BE PER ANNEX A3 OF TPI1-2002 SEC.3. A SEAL ON THIS DRAWING INDICATES ACCEPTANCE OF PROFESSIONAL ENGINEERING RESPONSIBILITY SOLELY FOR THE TRUSS COMPONENT DESIGN SHOWN. THE SUITABILITY AND USE OF THIS COMPONENT FOR ANY BUILDING IS THE RESPONSIBILITY OF THE BUILDING DESIGNER PER ANSI/TPI 1 SEC. 2.

DOUGLAS FLEMING LICENSE No. 66648 STATE OF FLORIDA PROFESSIONAL ENGINEER

TC LL	20.0 PSF	REF	R8228- 60349
TC DL	10.0 PSF	DATE	12/18/09
BC DL	10.0 PSF	DRW	HCUSR8228 09352047
BC LL	0.0 PSF	HC-ENG	JB/DF
TOT.LD.	40.0 PSF	SEQN-	68316
DUR.FAC.	1.25	FROM	AH
SPACING	24.0"	JREF-	1TXP8228Z01

(9-244--Fill in later EDGLEY -- , ** - G)

Top chord 2x4 SP #2 Dense
Bot chord 2x4 SP #2 Dense
Webs 2x4 SP #3

Roof overhang supports 2.00 psf soffit load.

H = recommended connection based on manufacturer tested capacities and calculations. Conditions may exist that require different connections than indicated. Refer to manufacturer publication for additional information.

MWFRS loads based on trusses located at least 15.00 ft. from roof edge.

110 mph wind, 15.00 ft mean hgt, ASCE 7-05, CLOSED bldg, not located within 4.50 ft from roof edge, CAT II, EXP C, wind TC DL=5.0 psf, wind BC DL=5.0 psf. Iw=1.00 GCpi(+/-)=0.18

Wind reactions based on MWFRS pressures.

Right end vertical not exposed to wind pressure.

Bottom chord checked for 10.00 psf non-concurrent live load.

Deflection meets L/240 live and L/180 total load.

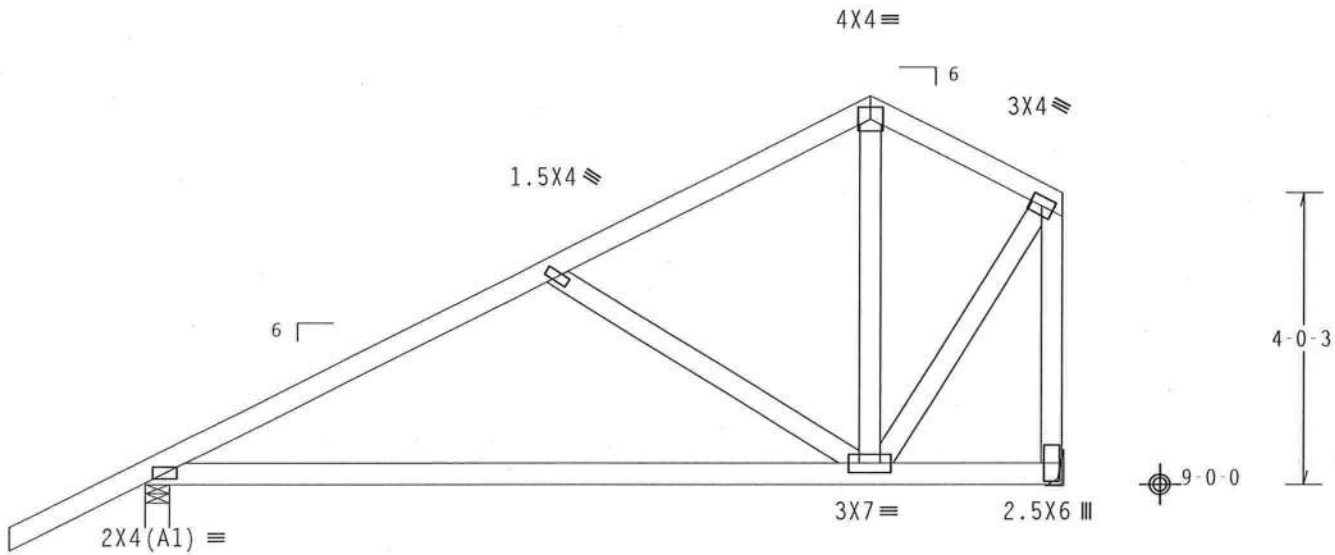

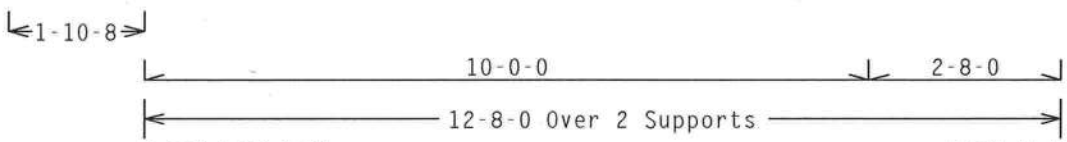

R=664 U=62 W=4"
RL=145/-103

R=505 U=46 H=Simpson LUS24
w/ (2) 10d Common, 0.148"x3.0" nails in Truss
w/ (4) 10d, 0.148"x1.5" nails in Girder
Girder is (1)2X0 min. So.Pine

Design Crit: FBC2007Res/TPI-2002(STD)
FT/RT=20%(0%)/0(0)

PLT TYP. Wave 9.02.00 (61) 1 QTY:4 FL/-/4/-/-/R/- Scale =.375"/Ft.

ALPINE
ITW Building Components Group Inc.
Haines City, FL 33844
FL COA #0278

DOUGLAS FLEMING LICENSE No. 66648 STATE OF FLORIDA PROFESSIONAL ENGINEER

18 '09

TC LL	20.0 PSF	REF	R8228- 60350
TC DL	10.0 PSF	DATE	12/18/09
BC DL	10.0 PSF	DRW	HCUSR8228 09352048
BC LL	0.0 PSF	HC-ENG	JB/DF
TOT.LD.	40.0 PSF	SEQN-	68321
DUR.FAC.	1.25	FROM	AH
SPACING	24.0"	JREF-	1TXP8228Z01

(9-244--Fill in later EDGLEY -- , ** - EJ7)

Top chord 2x4 SP #2 Dense
Bot chord 2x4 SP #2 Dense

Roof overhang supports 2.00 psf soffit load.

Bottom chord checked for 10.00 psf non-concurrent live load.

MWFRS loads based on trusses located at least 7.50 ft. from roof edge.

110 mph wind, 15.00 ft mean hgt, ASCE 7-05, CLOSED bldg, not located within 4.50 ft from roof edge, CAT II, EXP C, wind TC DL=5.0 psf, wind BC DL=5.0 psf. Iw=1.00 GCpi(+/-)=0.18

Wind reactions based on MWFRS pressures.

Deflection meets L/240 live and L/180 total load.

Provide (2) 16d common nails(0.162"x3.5"), toe nailed at Top chord.
Provide (2) 16d common nails(0.162"x3.5"), toe nailed at Bot chord.

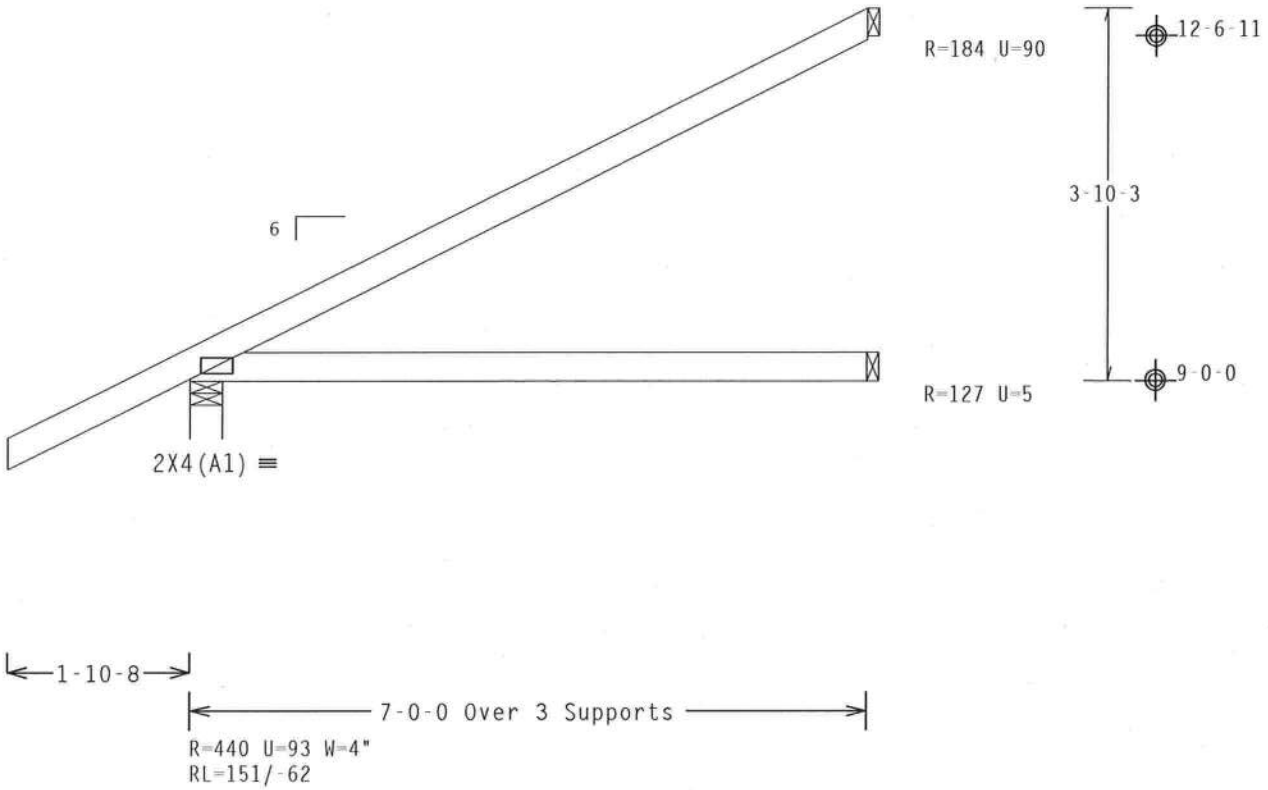

Design Crit: FBC2007Res/TPI-2002(STD)

PLT TYP. Wave FT/RT=20%(0%)/0(0) 9.02.00 QTY:20 FL/-/4/-/-/R/- Scale =.5"/Ft.

ALPINE
ITW Building Components Group Inc.
Haines City, FL 33844
FL COA #0 278

WARNING TRUSSES REQUIRE EXTREME CARE IN FABRICATION, HANDLING, SHIPPING, INSTALLING AND BRACING. REFER TO BCSI (BUILDING COMPONENT SAFETY INFORMATION), PUBLISHED BY TPI (TRUSS PLATE INSTITUTE, 218 NORTH LEE STREET, SUITE 312, ALEXANDRIA, VA, 22314) AND WTCA (WOOD TRUSS COUNCIL OF AMERICA, 6300 ENTERPRISE LANE, MADISON, WI 53719) FOR SAFETY PRACTICES PRIOR TO PERFORMING THESE FUNCTIONS. UNLESS OTHERWISE INDICATED TOP CHORD SHALL HAVE PROPERLY ATTACHED STRUCTURAL PANELS AND BOTTOM CHORD SHALL HAVE A PROPERLY ATTACHED RIGID CEILING.

IMPORTANTFURNISH A COPY OF THIS DESIGN TO THE INSTALLATION CONTRACTOR. ITW BCG, INC. SHALL NOT BE RESPONSIBLE FOR ANY DEVIATION FROM THIS DESIGN; ANY FAILURE TO BUILD THE TRUSS IN CONFORMANCE WITH TPI; OR FABRICATING, HANDLING, SHIPPING, INSTALLING & BRACING OF TRUSSES.
DESIGN CONFORMS WITH APPLICABLE PROVISIONS OF NDS (NATIONAL DESIGN SPEC. BY AF&PA) AND TPI. ITW BCG CONNECTOR PLATES ARE MADE OF 20/18/16GA (W,H/SS/K) ASTM A653 GRADE 40/60 (W, K/H,SS) GALV. STEEL. APPLY PLATES TO EACH FACE OF TRUSS AND, UNLESS OTHERWISE LOCATED ON THIS DESIGN, POSITION PER DRAWINGS 160A-Z. ANY INSPECTION OF PLATES FOLLOWED BY (1) SHALL BE PER ANNEX A3 OF TPI1-2002 SEC.3. A SEAL ON THIS DRAWING INDICATES ACCEPTANCE OF PROFESSIONAL ENGINEERING RESPONSIBILITY SOLELY FOR THE TRUSS COMPONENT DESIGN SHOWN. THE SUITABILITY AND USE OF THIS COMPONENT FOR ANY BUILDING IS THE RESPONSIBILITY OF THE BUILDING DESIGNER PER ANSI/TPI 1 SEC. 2.

DOUGLAS FLEMING LICENSE No. 66648 STATE OF FLORIDA PROFESSIONAL ENGINEER
12 18 '09

TC LL	20.0 PSF	REF	R8228- 60351
TC DL	10.0 PSF	DATE	12/18/09
BC DL	10.0 PSF	DRW	HCUSR8228 09352049
BC LL	0.0 PSF	HC-ENG	JB/DF
TOT.LD.	40.0 PSF	SEQN-	67650
DUR.FAC.	1.25	FROM	AH
SPACING	24.0"	JREF-	1TXP8228Z01

(9-244--Fill in later EDGLEY -- , ** - EJ7)

Top chord 2x4 SP #2 Dense
Bot chord 2x4 SP #2 Dense

Roof overhang supports 2.00 psf soffit load.

Bottom chord checked for 10.00 psf non-concurrent live load.

MWFRS loads based on trusses located at least 7.50 ft. from roof edge.

110 mph wind, 15.00 ft mean hgt, ASCE 7-05, CLOSED bldg, not located within 4.50 ft from roof edge, CAT II, EXP C, wind TC DL=5.0 psf, wind BC DL=5.0 psf. Iw=1.00 GCpi(+/-)=0.18

Wind reactions based on MWFRS pressures.

Deflection meets L/240 live and L/180 total load.

Provide (2) 16d common nails(0.162"x3.5"), toe nailed at Top chord.
Provide (2) 16d common nails(0.162"x3.5"), toe nailed at Bot chord.

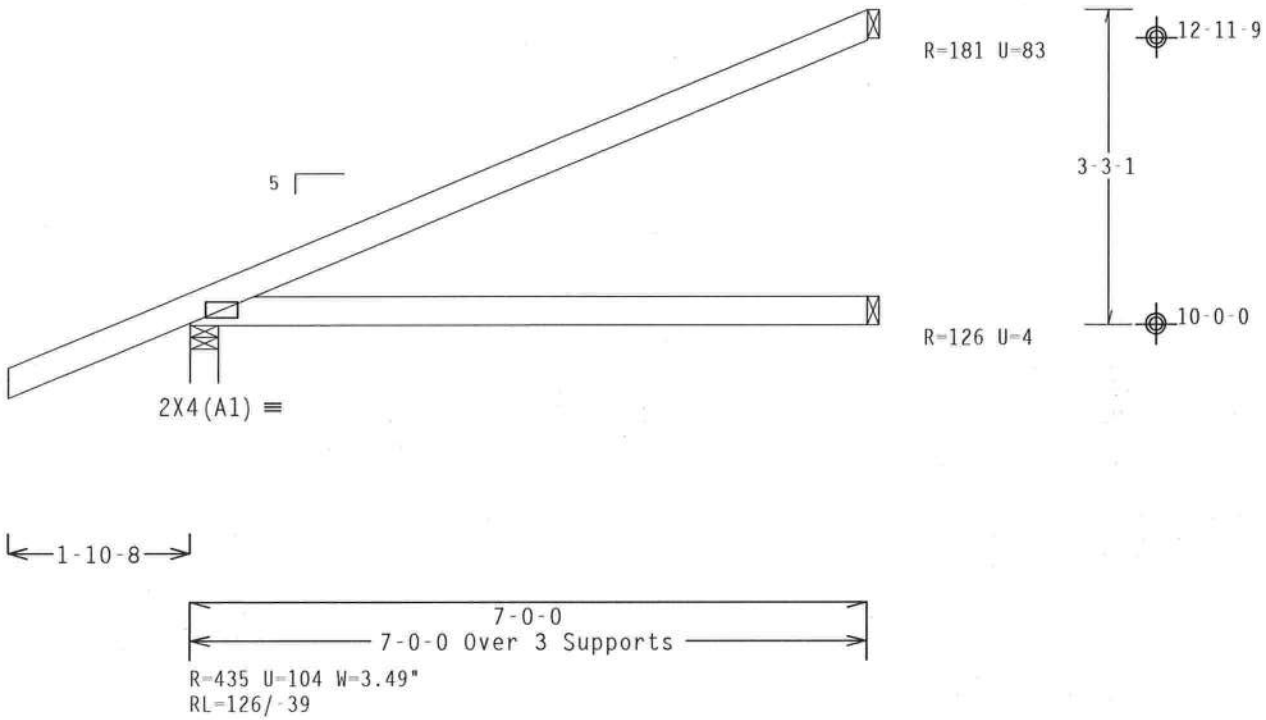

Design Crit: FBC2007Res/TPI-2002(STD)

PLT TYP. Wave FT/RT=20%(0%)/0(0) 9.02.00 Gen: 10 QTY:14 FL/-/4/-/-/R/- Scale =.5"/Ft.

ALPINE
ITW Building Components Group Inc.
Haines City, FL 33844
FL COA #0278

WARNING TRUSSES REQUIRE EXTREME CARE IN FABRICATION, HANDLING, SHIPPING, INSTALLING AND BRACING. REFER TO BCSI (BUILDING COMPONENT SAFETY INFORMATION), PUBLISHED BY TPI (TRUSS PLATE INSTITUTE, 218 NORTH LEE STREET, SUITE 312, ALEXANDRIA, VA. 22314) AND WTCA (WOOD TRUSS COUNCIL OF AMERICA, 6300 ENTERPRISE LANE, MADISON, WI 53719) FOR SAFETY PRACTICES PRIOR TO PERFORMING THESE FUNCTIONS. UNLESS OTHERWISE INDICATED TOP CHORD SHALL HAVE PROPERLY ATTACHED STRUCTURAL PANELS AND BOTTOM CHORD SHALL HAVE A PROPERLY ATTACHED RIGID CEILING.

IMPORTANTFURNISH A COPY OF THIS DESIGN TO THE INSTALLATION CONTRACTOR. ITW BCG, INC. SHALL NOT BE RESPONSIBLE FOR ANY DEVIATION FROM THIS DESIGN; ANY FAILURE TO BUILD THE TRUSS IN CONFORMANCE WITH TPI; OR FABRICATING, HANDLING, SHIPPING, INSTALLING & BRACING OF TRUSSES.
DESIGN CONFORMS WITH APPLICABLE PROVISIONS OF NDS (NATIONAL DESIGN SPEC, BY AF&PA) AND TPI. ITW BCG CONNECTOR PLATES ARE MADE OF 20/18/16GA (W,H/SS/K) ASTM A653 GRADE 40/60 (W, K/H,SS) GALV. STEEL. APPLY PLATES TO EACH FACE OF TRUSS AND, UNLESS OTHERWISE LOCATED ON THIS DESIGN, POSITION PER DRAWINGS 160A-Z. ANY INSPECTION OF PLATES FOLLOWED BY (I) SHALL BE PER ANNEX A3 OF TPI1-2002 SEC.3. A SEAL ON THIS DRAWING INDICATES ACCEPTANCE OF PROFESSIONAL ENGINEERING RESPONSIBILITY SOLELY FOR THE TRUSS COMPONENT DESIGN SHOWN. THE SUITABILITY AND USE OF THIS COMPONENT FOR ANY BUILDING IS THE RESPONSIBILITY OF THE BUILDING DESIGNER PER ANSI/TPI 1 SEC. 2.

DOUGLAS FLEMING LICENSE No. 66648 STATE OF FLORIDA PROFESSIONAL ENGINEER
Dec 18 '09

TC LL	20.0 PSF	REF	R8228- 60352
TC DL	10.0 PSF	DATE	12/18/09
BC DL	10.0 PSF	DRW	HCUSR8228 09352050
BC LL	0.0 PSF	HC-ENG	JB/DF
TOT.LD.	40.0 PSF	SEQN-	67570
DUR.FAC.	1.25	FROM	GA
SPACING	24.0"	JREF-	1TXP8228Z01

(9-244--Fill in later EDGLEY -- , ** - CJ5)

Top chord 2x4 SP #2 Dense
Bot chord 2x4 SP #2 Dense

Roof overhang supports 2.00 psf soffit load.

Bottom chord checked for 10.00 psf non-concurrent live load.

Provide (2) 16d common nails(0.162"x3.5"), toe nailed at Top chord.
Provide (2) 16d common nails(0.162"x3.5"), toe nailed at Bot chord.

110 mph wind, 15.00 ft mean hgt, ASCE 7-05, CLOSED bldg, not located within 4.50 ft from roof edge, CAT II, EXP C, wind TC DL=5.0 psf, wind BC DL=5.0 psf. Iw=1.00 GCpi(+/-)=0.18

Wind reactions based on MWFRS pressures.

Deflection meets L/240 live and L/180 total load.

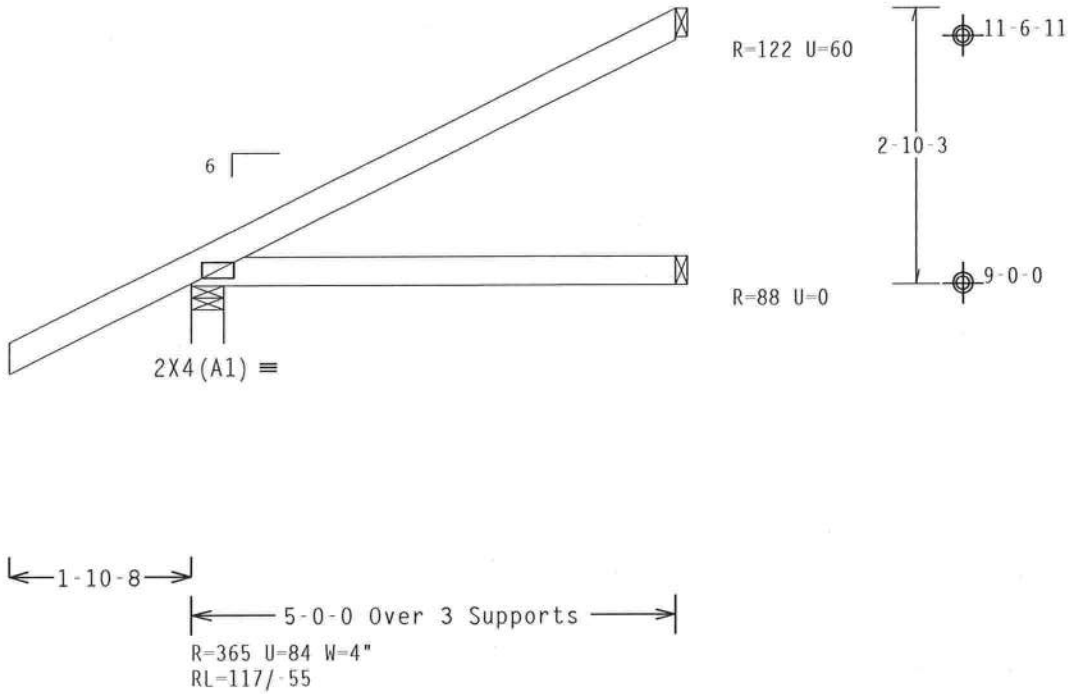

Design Crit: FBC2007Res/TPI-2002(STD)

PLT TYP. Wave FT/RT=20%(0%)/0(0) 9.02.00 [illegible] QTY:14 FL/-/4/-/-/R/- Scale =.5"/Ft.

ALPINE
ITW Building Components Group Inc.
Haines City, FL 33844
FL COA #0 278

DOUGLAS FLEMING LICENSE No. 66648 STATE OF FLORIDA PROFESSIONAL ENGINEER

[illegible]C 18 '09

TC LL	20.0 PSF	REF	R8228- 60353
TC DL	10.0 PSF	DATE	12/18/09
BC DL	10.0 PSF	DRW	HCUSR8228 09352051
BC LL	0.0 PSF	HC-ENG	JB/DF
TOT.LD.	40.0 PSF	SEQN-	67653
DUR.FAC.	1.25	FROM	AH
SPACING	24.0"	JREF-	1TXP8228Z01

(9-244--Fill in later EDGLEY -- , ** - HJ7)

Top chord 2x4 SP #2 Dense
Bot chord 2x4 SP #2 Dense
Webs 2x4 SP #3

Hipjack supports 7-0-0 setback jacks with no webs.

Deflection meets L/240 live and L/180 total load.

110 mph wind, 15.00 ft mean hgt, ASCE 7-05, CLOSED bldg, Located anywhere in roof, CAT II, EXP C, wind TC DL=5.0 psf, wind BC DL=5.0 psf. Iw=1.00 GCpi(+/-)=0.18

Wind reactions based on MWFRS pressures.

Provide (2) 16d common nails(0.162"x3.5"), toe nailed at Top chord.
Provide (3) 16d common nails(0.162"x3.5"), toe nailed at Bot chord.

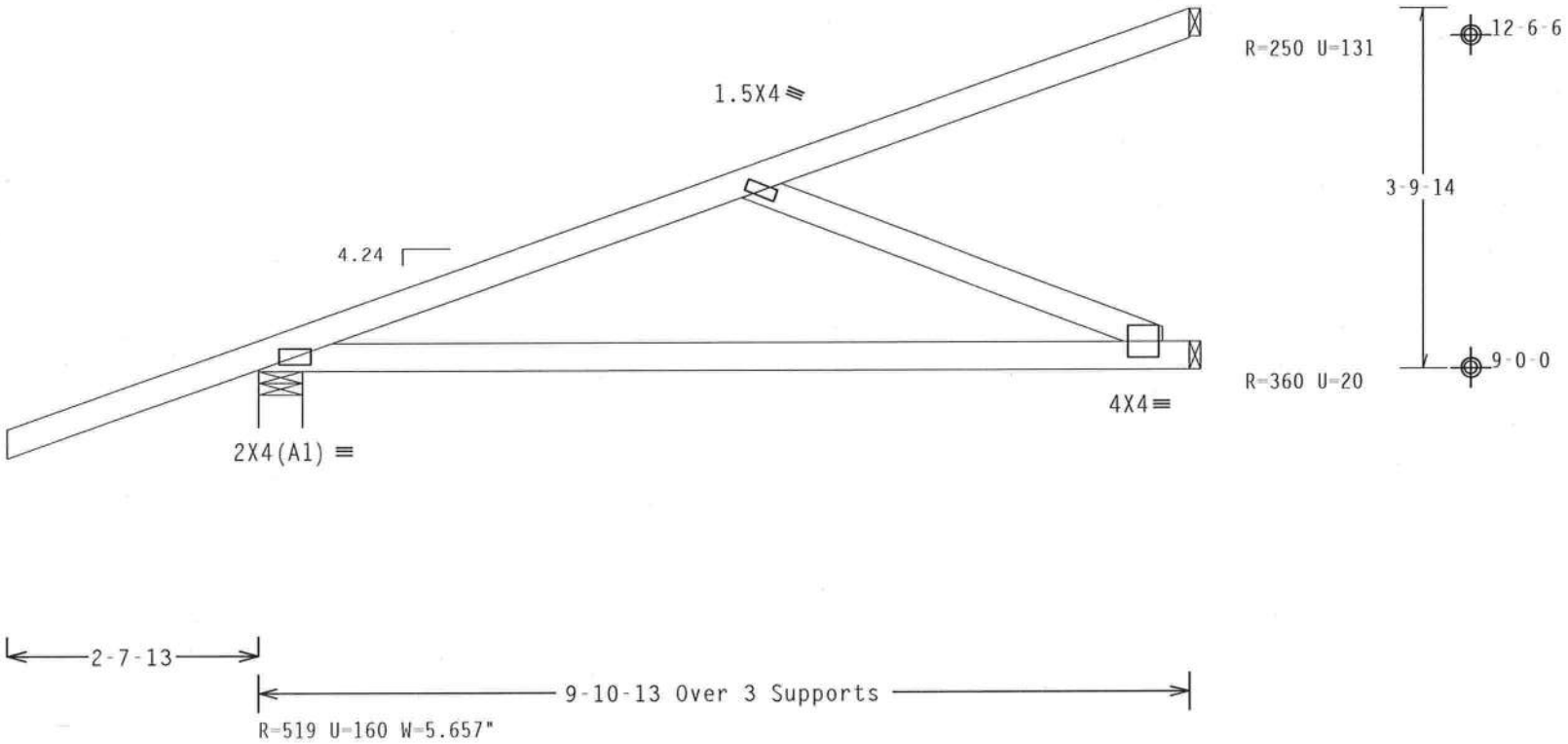

Design Crit: FBC2007Res/TPI-2002(STD)

PLT TYP. Wave | FT/RT=20%(0%)/0(0) | 9.02.00 [illegible] | QTY:7 | FL/-/4/-/-/R/- | Scale =.5"/Ft.

ALPINE
ITW Building Components Group Inc.
Haines City, FL 33844
FL COA #9278

WARNING TRUSSES REQUIRE EXTREME CARE IN FABRICATION, HANDLING, SHIPPING, INSTALLING AND BRACING. REFER TO BCSI (BUILDING COMPONENT SAFETY INFORMATION), PUBLISHED BY TPI (TRUSS PLATE INSTITUTE, 218 NORTH LEE STREET, SUITE 312, ALEXANDRIA, VA. 22314) AND WTCA (WOOD TRUSS COUNCIL OF AMERICA, 6300 ENTERPRISE LANE, MADISON, WI 53719) FOR SAFETY PRACTICES PRIOR TO PERFORMING THESE FUNCTIONS. UNLESS OTHERWISE INDICATED TOP CHORD SHALL HAVE PROPERLY ATTACHED STRUCTURAL PANELS AND BOTTOM CHORD SHALL HAVE A PROPERLY ATTACHED RIGID CEILING.

IMPORTANTFURNISH A COPY OF THIS DESIGN TO THE INSTALLATION CONTRACTOR. ITW BCG, INC. SHALL NOT BE RESPONSIBLE FOR ANY DEVIATION FROM THIS DESIGN; ANY FAILURE TO BUILD THE TRUSS IN COMFORMANCE WITH TPI; OR FABRICATING, HANDLING, SHIPPING, INSTALLING & BRACING OF TRUSSES.
DESIGN CONFORMS WITH APPLICABLE PROVISIONS OF NDS (NATIONAL DESIGN SPEC. BY AF&PA) AND TPI. ITW BCG CONNECTOR PLATES ARE MADE OF 20/18/16GA (W,H/SS/K) ASTM A653 GRADE 40/60 (W, K/H,SS) GALV. STEEL. APPLY PLATES TO EACH FACE OF TRUSS AND, UNLESS OTHERWISE LOCATED ON THIS DESIGN, POSITION PER DRAWINGS 160A-Z. ANY INSPECTION OF PLATES FOLLOWED BY (1) SHALL BE PER ANNEX A3 OF TPI1-2002 SEC.3. A SEAL ON THIS DRAWING INDICATES ACCEPTANCE OF PROFESSIONAL ENGINEERING RESPONSIBILITY SOLELY FOR THE TRUSS COMPONENT DESIGN SHOWN. THE SUITABILITY AND USE OF THIS COMPONENT FOR ANY BUILDING IS THE RESPONSIBILITY OF THE BUILDING DESIGNER PER ANSI/TPI 1 SEC. 2.

DOUGLAS FLEMING LICENSE No. 66648 STATE OF FLORIDA PROFESSIONAL ENGINEER
DEC 18 '09

TC LL	20.0 PSF	REF	R8228- 60354
TC DL	10.0 PSF	DATE	12/18/09
BC DL	10.0 PSF	DRW	HCUSR8228 09352060
BC LL	0.0 PSF	HC-ENG	JB/DF
TOT.LD.	40.0 PSF	SEQN-	67663
DUR.FAC.	1.25	FROM	AH
SPACING	24.0"	JREF-	1TXP8228Z01

(9-244--Fill in later EDGLEY -- , ** - CJ3)

Top chord 2x4 SP #2 Dense
Bot chord 2x4 SP #2 Dense

Roof overhang supports 2.00 psf soffit load.

Bottom chord checked for 10.00 psf non-concurrent live load.

Provide (2) 16d common nails(0.162"x3.5"), toe nailed at Top chord.
Provide (2) 16d common nails(0.162"x3.5"), toe nailed at Bot chord.

110 mph wind, 15.00 ft mean hgt, ASCE 7-05, CLOSED bldg, Located anywhere in roof, CAT II, EXP C, wind TC DL=5.0 psf, wind BC DL=5.0 psf. Iw=1.00 GCpi(+/-)=0.18

Wind reactions based on MWFRS pressures.

Deflection meets L/240 live and L/180 total load.

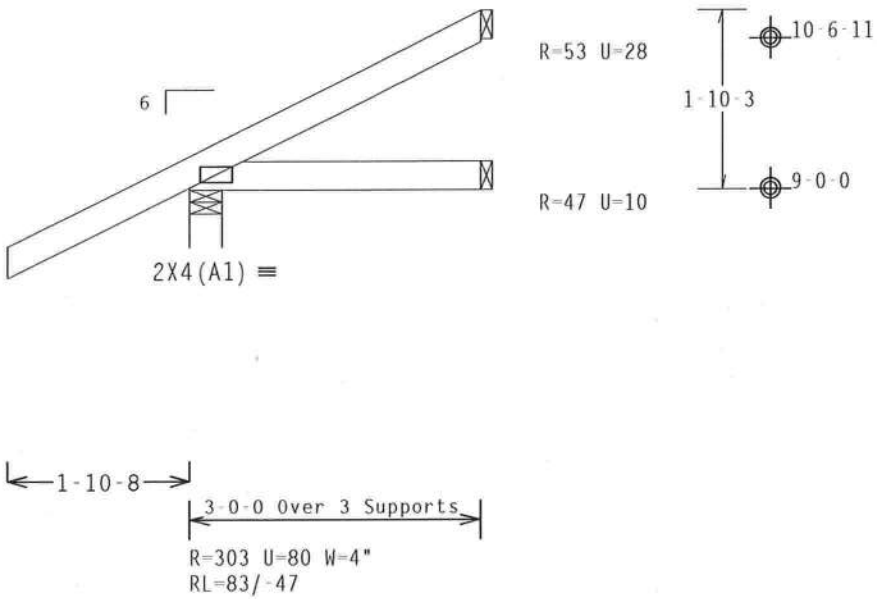

Design Crit: FBC2007Res/TPI-2002(STD)

PLT TYP. Wave FT/RT=20%(0%)/0(0) 9.02.00 [illegible] QTY:14 FL/-/4/-/-/R/- Scale =.5"/Ft.

ALPINE
ITW Building Components Group Inc.
Haines City, FL 33844
FL COA #0278

WARNING TRUSSES REQUIRE EXTREME CARE IN FABRICATION, HANDLING, SHIPPING, INSTALLING AND BRACING. REFER TO BCSI (BUILDING COMPONENT SAFETY INFORMATION), PUBLISHED BY TPI (TRUSS PLATE INSTITUTE, 218 NORTH LEE STREET, SUITE 312, ALEXANDRIA, VA. 22314) AND WTCA (WOOD TRUSS COUNCIL OF AMERICA, 6300 ENTERPRISE LANE, MADISON, WI 53719) FOR SAFETY PRACTICES PRIOR TO PERFORMING THESE FUNCTIONS. UNLESS OTHERWISE INDICATED TOP CHORD SHALL HAVE PROPERLY ATTACHED STRUCTURAL PANELS AND BOTTOM CHORD SHALL HAVE A PROPERLY ATTACHED RIGID CEILING.

IMPORTANTFURNISH A COPY OF THIS DESIGN TO THE INSTALLATION CONTRACTOR. ITW BCG, INC. SHALL NOT BE RESPONSIBLE FOR ANY DEVIATION FROM THIS DESIGN; ANY FAILURE TO BUILD THE TRUSS IN CONFORMANCE WITH TPI; OR FABRICATING, HANDLING, SHIPPING, INSTALLING & BRACING OF TRUSSES.
DESIGN CONFORMS WITH APPLICABLE PROVISIONS OF NDS (NATIONAL DESIGN SPEC, BY AF&PA) AND TPI. ITW BCG CONNECTOR PLATES ARE MADE OF 20/18/16GA (W,H/SS/K) ASTM A653 GRADE 40/60 (W, K/H,SS) GALV. STEEL. APPLY PLATES TO EACH FACE OF TRUSS AND, UNLESS OTHERWISE LOCATED ON THIS DESIGN, POSITION PER DRAWINGS 160A-Z. ANY INSPECTION OF PLATES FOLLOWED BY (1) SHALL BE PER ANNEX A3 OF TPI1-2002 SEC.3. A SEAL ON THIS DRAWING INDICATES ACCEPTANCE OF PROFESSIONAL ENGINEERING RESPONSIBILITY SOLELY FOR THE TRUSS COMPONENT DESIGN SHOWN. THE SUITABILITY AND USE OF THIS COMPONENT FOR ANY BUILDING IS THE RESPONSIBILITY OF THE BUILDING DESIGNER PER ANSI/TPI 1 SEC. 2.

DOUGLAS FLEMING LICENSE No. 66648 STATE OF FLORIDA PROFESSIONAL ENGINEER

TC LL	20.0 PSF	REF	R8228- 60355
TC DL	10.0 PSF	DATE	12/18/09
BC DL	10.0 PSF	DRW	HCUSR8228 09352052
BC LL	0.0 PSF	HC-ENG	JB/DF
TOT.LD.	40.0 PSF	SEQN-	67656
DUR.FAC.	1.25	FROM	AH
SPACING	24.0"	JREF-	1TXP8228Z01

18 '09

(9-244--Fill in later EDGLEY -- , ** - CJ1)

Top chord 2x4 SP #2 Dense
Bot chord 2x4 SP #2 Dense

Roof overhang supports 2.00 psf soffit load.

Bottom chord checked for 10.00 psf non-concurrent live load.

Provide (2) 16d common nails(0.162"x3.5"), toe nailed at Top chord.
Provide (2) 16d common nails(0.162"x3.5"), toe nailed at Bot chord.

110 mph wind, 15.00 ft mean hgt, ASCE 7-05, CLOSED bldg, Located anywhere in roof, CAT II, EXP C, wind TC DL=5.0 psf, wind BC DL=5.0 psf. Iw=1.00 GCpi(+/-)=0.18

Wind reactions based on MWFRS pressures.

Deflection meets L/240 live and L/180 total load.

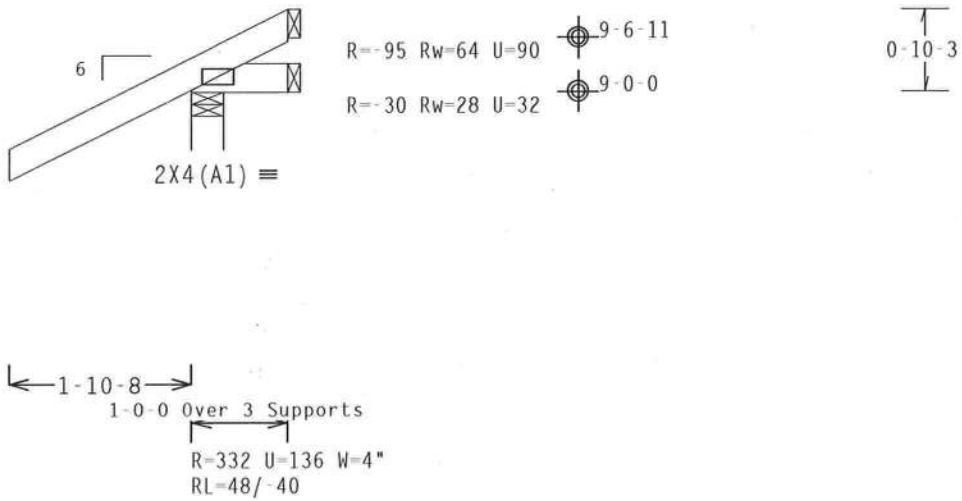

Design Crit: FBC2007Res/TPI-2002(STD)

PLT TYP. Wave FT/RT=20%(0%)/0(0) 9.02.00 QTY:18 FL/-/4/-/-/R/- Scale =.5"/Ft.

ALPINE
ITW Building Components Group Inc.
Haines City, FL 33844
FL COA #0278

WARNING TRUSSES REQUIRE EXTREME CARE IN FABRICATION, HANDLING, SHIPPING, INSTALLING AND BRACING. REFER TO BCSI (BUILDING COMPONENT SAFETY INFORMATION), PUBLISHED BY TPI (TRUSS PLATE INSTITUTE, 218 NORTH LEE STREET, SUITE 312, ALEXANDRIA, VA. 22314) AND WTCA (WOOD TRUSS COUNCIL OF AMERICA, 6300 ENTERPRISE LANE, MADISON, WI 53719) FOR SAFETY PRACTICES PRIOR TO PERFORMING THESE FUNCTIONS. UNLESS OTHERWISE INDICATED TOP CHORD SHALL HAVE PROPERLY ATTACHED STRUCTURAL PANELS AND BOTTOM CHORD SHALL HAVE A PROPERLY ATTACHED RIGID CEILING.

IMPORTANTFURNISH A COPY OF THIS DESIGN TO THE INSTALLATION CONTRACTOR. ITW BCG, INC. SHALL NOT BE RESPONSIBLE FOR ANY DEVIATION FROM THIS DESIGN; ANY FAILURE TO BUILD THE TRUSS IN CONFORMANCE WITH TPI; OR FABRICATING, HANDLING, SHIPPING, INSTALLING & BRACING OF TRUSSES.
DESIGN CONFORMS WITH APPLICABLE PROVISIONS OF NDS (NATIONAL DESIGN SPEC. BY AF&PA) AND TPI. ITW BCG CONNECTOR PLATES ARE MADE OF 20/18/16GA (W,H/SS/K) ASTM A653 GRADE 40/60 (W, K/H,SS) GALV. STEEL. APPLY PLATES TO EACH FACE OF TRUSS AND, UNLESS OTHERWISE LOCATED ON THIS DESIGN, POSITION PER DRAWINGS 160A-Z. ANY INSPECTION OF PLATES FOLLOWED BY (1) SHALL BE PER ANNEX A3 OF TPI1-2002 SEC.3. A SEAL ON THIS DRAWING INDICATES ACCEPTANCE OF PROFESSIONAL ENGINEERING RESPONSIBILITY SOLELY FOR THE TRUSS COMPONENT DESIGN SHOWN. THE SUITABILITY AND USE OF THIS COMPONENT FOR ANY BUILDING IS THE RESPONSIBILITY OF THE BUILDING DESIGNER PER ANSI/TPI 1 SEC. 2.

DOUGLAS FLEMING LICENSE No. 66648 STATE OF FLORIDA PROFESSIONAL ENGINEER

Dec 18 '09

TC LL	20.0 PSF	REF	R8228- 60356
TC DL	10.0 PSF	DATE	12/18/09
BC DL	10.0 PSF	DRW	HCUSR8228 09352053
BC LL	0.0 PSF	HC-ENG	JB/DF
TOT.LD.	40.0 PSF	SEQN-	67660
DUR.FAC.	1.25	FROM	AH
SPACING	24.0"	JREF-	1TXP8228Z01

(9-244--Fill in later EDGLEY -- , ** - CJ5)

Top chord 2x4 SP #2 Dense
Bot chord 2x4 SP #2 Dense

Roof overhang supports 2.00 psf soffit load.

Bottom chord checked for 10.00 psf non-concurrent live load.

Provide (2) 16d common nails(0.162"x3.5"), toe nailed at Top chord.
Provide (2) 16d common nails(0.162"x3.5"), toe nailed at Bot chord.

110 mph wind, 15.00 ft mean hgt, ASCE 7-05, CLOSED bldg, not located within 4.50 ft from roof edge, CAT II, EXP C, wind TC DL=5.0 psf, wind BC DL=5.0 psf. Iw=1.00 GCpi(+/-)=0.18

Wind reactions based on MWFRS pressures.

Deflection meets L/240 live and L/180 total load.

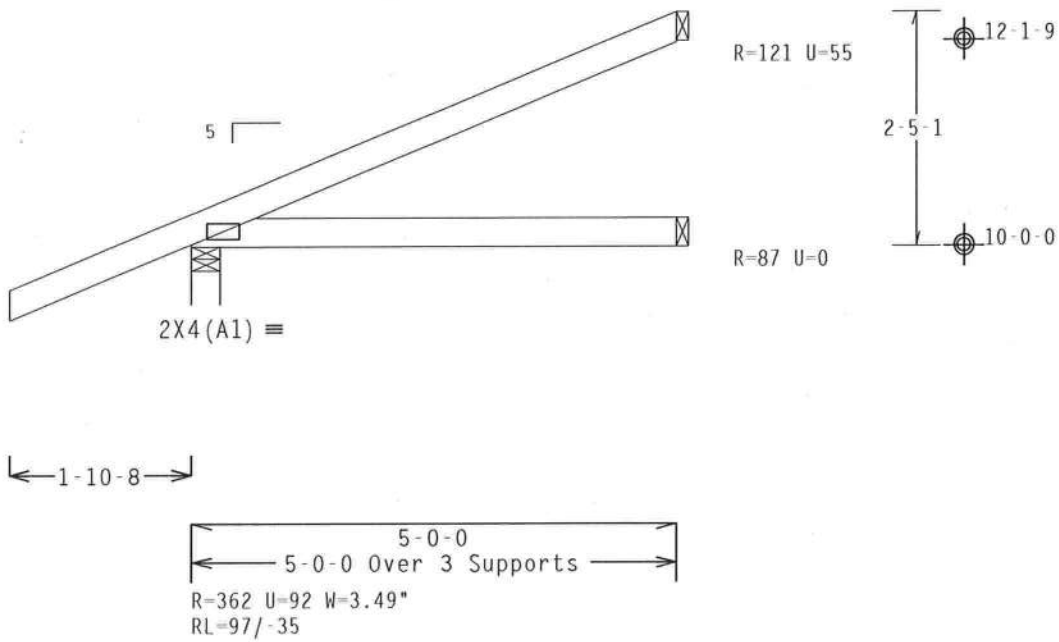

Design Crit: FBC2007Res/TPI-2002(STD)

PLT TYP. Wave FT/RT=20%(0%)/0(0) 9.02.00 6/1/1 QTY:4 FL/-/4/-/-/R/- Scale =.5"/Ft.

ALPINE
ITW Building Components Group Inc.
Haines City, FL 33844
FL COA #0278

WARNING TRUSSES REQUIRE EXTREME CARE IN FABRICATION, HANDLING, SHIPPING, INSTALLING AND BRACING. REFER TO BCSI (BUILDING COMPONENT SAFETY INFORMATION), PUBLISHED BY TPI (TRUSS PLATE INSTITUTE, 218 NORTH LEE STREET, SUITE 312, ALEXANDRIA, VA. 22314) AND WTCA (WOOD TRUSS COUNCIL OF AMERICA, 6300 ENTERPRISE LANE, MADISON, WI 53719) FOR SAFETY PRACTICES PRIOR TO PERFORMING THESE FUNCTIONS. UNLESS OTHERWISE INDICATED TOP CHORD SHALL HAVE PROPERLY ATTACHED STRUCTURAL PANELS AND BOTTOM CHORD SHALL HAVE A PROPERLY ATTACHED RIGID CEILING.

IMPORTANTFURNISH A COPY OF THIS DESIGN TO THE INSTALLATION CONTRACTOR. ITW BCG, INC. SHALL NOT BE RESPONSIBLE FOR ANY DEVIATION FROM THIS DESIGN; ANY FAILURE TO BUILD THE TRUSS IN CONFORMANCE WITH TPI; OR FABRICATING, HANDLING, SHIPPING, INSTALLING & BRACING OF TRUSSES.
DESIGN CONFORMS WITH APPLICABLE PROVISIONS OF NDS (NATIONAL DESIGN SPEC. BY AF&PA) AND TPI. ITW BCG CONNECTOR PLATES ARE MADE OF 20/18/16GA (W,H/SS/K) ASTM A653 GRADE 40/60 (W, K/H,SS) GALV. STEEL. APPLY PLATES TO EACH FACE OF TRUSS AND, UNLESS OTHERWISE LOCATED ON THIS DESIGN, POSITION PER DRAWINGS 160A-Z. ANY INSPECTION OF PLATES FOLLOWED BY (1) SHALL BE PER ANNEX A3 OF TPI1-2002 SEC.3. A SEAL ON THIS DRAWING INDICATES ACCEPTANCE OF PROFESSIONAL ENGINEERING RESPONSIBILITY SOLELY FOR THE TRUSS COMPONENT DESIGN SHOWN. THE SUITABILITY AND USE OF THIS COMPONENT FOR ANY BUILDING IS THE RESPONSIBILITY OF THE BUILDING DESIGNER PER ANSI/TPI 1 SEC. 2.

DOUGLAS FLEMING LICENSE No. 66648 STATE OF FLORIDA PROFESSIONAL ENGINEER

18 '09

TC LL	20.0 PSF	REF R8228- 60357
TC DL	10.0 PSF	DATE 12/18/09
BC DL	10.0 PSF	DRW HCUSR8228 09352054
BC LL	0.0 PSF	HC-ENG JB/DF
TOT.LD.	40.0 PSF	SEQN- 67573
DUR.FAC.	1.25	FROM AH
SPACING	24.0"	JREF- 1TXP8228Z01

(9-244--Fill in later EDGLEY -- , ** - CJ3)

Top chord 2x4 SP #2 Dense
Bot chord 2x4 SP #2 Dense

Roof overhang supports 2.00 psf soffit load.

Bottom chord checked for 10.00 psf non-concurrent live load.

Provide (2) 16d common nails(0.162"x3.5"), toe nailed at Top chord.
Provide (2) 16d common nails(0.162"x3.5"), toe nailed at Bot chord.

110 mph wind, 15.00 ft mean hgt, ASCE 7-05, CLOSED bldg, Located anywhere in roof, CAT II, EXP C, wind TC DL=5.0 psf, wind BC DL=5.0 psf. Iw=1.00 GCpi(+/-)=0.18

Wind reactions based on MWFRS pressures.

Deflection meets L/240 live and L/180 total load.

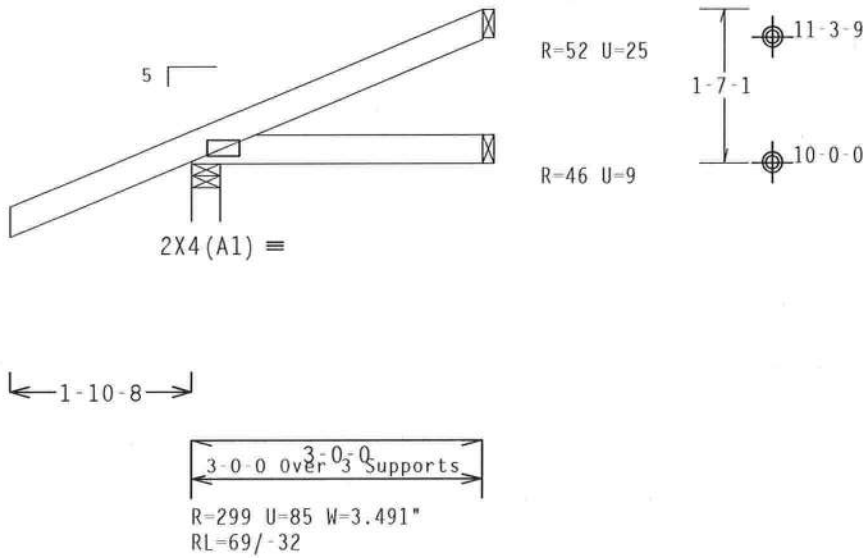

Design Crit: FBC2007Res/TPI-2002(STD)

PLT TYP. Wave FT/RT=20%(0%)/0(0) 9.02.00 [illegible] QTY:4 FL/-/4/-/-/R/- Scale =.5"/Ft.

ALPINE
ITW Building Components Group Inc.
Haines City, FL 33844
FL COA #0278

WARNING TRUSSES REQUIRE EXTREME CARE IN FABRICATION, HANDLING, SHIPPING, INSTALLING AND BRACING. REFER TO BCSI (BUILDING COMPONENT SAFETY INFORMATION), PUBLISHED BY TPI (TRUSS PLATE INSTITUTE, 218 NORTH LEE STREET, SUITE 312, ALEXANDRIA, VA. 22314) AND WTCA (WOOD TRUSS COUNCIL OF AMERICA, 6300 ENTERPRISE LANE, MADISON, WI 53719) FOR SAFETY PRACTICES PRIOR TO PERFORMING THESE FUNCTIONS. UNLESS OTHERWISE INDICATED TOP CHORD SHALL HAVE PROPERLY ATTACHED STRUCTURAL PANELS AND BOTTOM CHORD SHALL HAVE A PROPERLY ATTACHED RIGID CEILING.

IMPORTANT FURNISH A COPY OF THIS DESIGN TO THE INSTALLATION CONTRACTOR. ITW BCG, INC. SHALL NOT BE RESPONSIBLE FOR ANY DEVIATION FROM THIS DESIGN; ANY FAILURE TO BUILD THE TRUSS IN CONFORMANCE WITH TPI; OR FABRICATING, HANDLING, SHIPPING, INSTALLING & BRACING OF TRUSSES.
DESIGN CONFORMS WITH APPLICABLE PROVISIONS OF NDS (NATIONAL DESIGN SPEC. BY AF&PA) AND TPI. ITW BCG CONNECTOR PLATES ARE MADE OF 20/18/16GA (W,H/SS/K) ASTM A653 GRADE 40/60 (W, K/H,SS) GALV. STEEL. APPLY PLATES TO EACH FACE OF TRUSS AND, UNLESS OTHERWISE LOCATED ON THIS DESIGN, POSITION PER DRAWINGS 160A-Z. ANY INSPECTION OF PLATES FOLLOWED BY (1) SHALL BE PER ANNEX A3 OF TPI1-2002 SEC.3. A SEAL ON THIS DRAWING INDICATES ACCEPTANCE OF PROFESSIONAL ENGINEERING RESPONSIBILITY SOLELY FOR THE TRUSS COMPONENT DESIGN SHOWN. THE SUITABILITY AND USE OF THIS COMPONENT FOR ANY BUILDING IS THE RESPONSIBILITY OF THE BUILDING DESIGNER PER ANSI/TPI 1 SEC. 2.

DOUGLAS FLEMING LICENSE No. 66648 STATE OF FLORIDA PROFESSIONAL ENGINEER

[illegible] 18 '09

TC LL	20.0 PSF	REF	R8228- 60358
TC DL	10.0 PSF	DATE	12/18/09
BC DL	10.0 PSF	DRW	HCUSR8228 09352055
BC LL	0.0 PSF	HC-ENG	JB/DF
TOT.LD.	40.0 PSF	SEQN-	67576
DUR.FAC.	1.25	FROM	AH
SPACING	24.0"	JREF-	1TXP8228Z01

(9-244--Fill in later EDGLEY -- , ** - CJ1)

Top chord 2x4 SP #2 Dense
Bot chord 2x4 SP #2 Dense

Roof overhang supports 2.00 psf soffit load.

Bottom chord checked for 10.00 psf non-concurrent live load.

Provide (2) 16d common nails(0.162"x3.5"), toe nailed at Top chord.
Provide (2) 16d common nails(0.162"x3.5"), toe nailed at Bot chord.

110 mph wind, 15.00 ft mean hgt, ASCE 7-05, CLOSED bldg, Located anywhere in roof, CAT II, EXP C, wind TC DL=5.0 psf, wind BC DL=5.0 psf. Iw=1.00 GCpi(+/-)=0.18

Wind reactions based on MWFRS pressures.

Deflection meets L/240 live and L/180 total load.

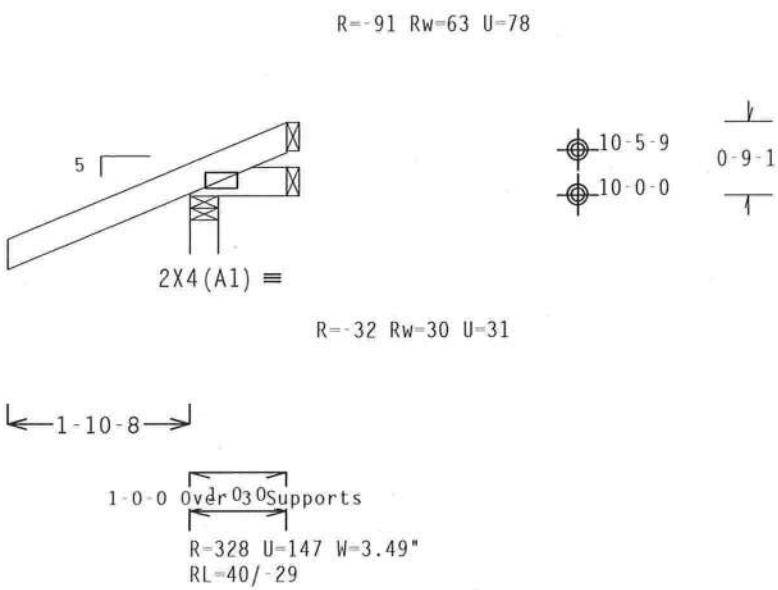

Design Crit: FBC2007Res/TPI-2002(STD)

PLT TYP. Wave FT/RT=20%(0%)/0(0) 9.02.00/2011 QTY:4 FL/-/4/-/-/R/- Scale =.5"/Ft.

ALPINE
ITW Building Components Group Inc.
Haines City, FL 33844
FL COA #0278

DOUGLAS FLEMING LICENSE No. 66648 STATE OF FLORIDA PROFESSIONAL ENGINEER

Dec 18 '09

TC LL	20.0 PSF	REF	R8228- 60359
TC DL	10.0 PSF	DATE	12/18/09
BC DL	10.0 PSF	DRW	HCUSR8228 09352056
BC LL	0.0 PSF	HC-ENG	JB/DF
TOT.LD.	40.0 PSF	SEQN-	67579
DUR.FAC.	1.25	FROM	AH
SPACING	24.0"	JREF-	1TXP8228Z01

(9-244--Fill in later EDGLEY -- , ** - EJ7S)

Top chord 2x4 SP #2 Dense
Bot chord 2x4 SP #2 Dense
Webs 2x4 SP #3

Roof overhang supports 2.00 psf soffit load.

Bottom chord checked for 10.00 psf non-concurrent live load.

Provide (2) 16d common nails(0.162"x3.5"), toe nailed at Top chord.
Provide (2) 16d common nails(0.162"x3.5"), toe nailed at Bot chord.

110 mph wind, 15.00 ft mean hgt, ASCE 7-05, CLOSED bldg, Located anywhere in roof, CAT II, EXP C, wind TC DL=5.0 psf, wind BC DL=5.0 psf. Iw=1.00 GCpi(+/-)=0.18

Wind reactions based on MWFRS pressures.

Deflection meets L/240 live and L/180 total load.

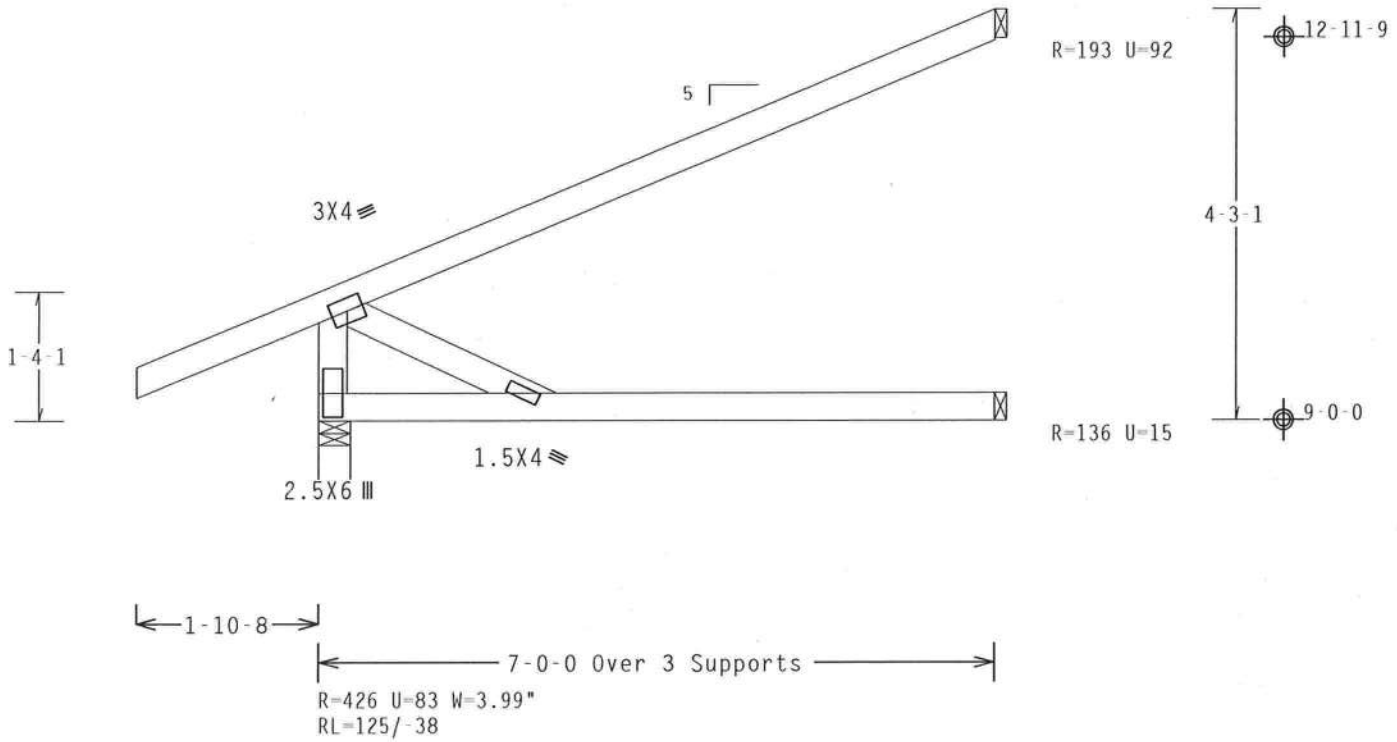

Design Crit: FBC2007Res/TPI-2002(STD)

PLT TYP. Wave | FT/RT=20%(0%)/0(0) | 9.02.00 | QTY:7 | FL/-/4/-/-/R/- | Scale =.5"/Ft.

ALPINE
ITW Building Components Group Inc.
Haines City, FL 33844
FL COA #0 278

WARNING TRUSSES REQUIRE EXTREME CARE IN FABRICATION, HANDLING, SHIPPING, INSTALLING AND BRACING. REFER TO BCSI (BUILDING COMPONENT SAFETY INFORMATION), PUBLISHED BY TPI (TRUSS PLATE INSTITUTE, 218 NORTH LEE STREET, SUITE 312, ALEXANDRIA, VA. 22314) AND WTCA (WOOD TRUSS COUNCIL OF AMERICA, 6300 ENTERPRISE LANE, MADISON, WI 53719) FOR SAFETY PRACTICES PRIOR TO PERFORMING THESE FUNCTIONS. UNLESS OTHERWISE INDICATED TOP CHORD SHALL HAVE PROPERLY ATTACHED STRUCTURAL PANELS AND BOTTOM CHORD SHALL HAVE A PROPERLY ATTACHED RIGID CEILING.

IMPORTANTFURNISH A COPY OF THIS DESIGN TO THE INSTALLATION CONTRACTOR. ITW BCG, INC. SHALL NOT BE RESPONSIBLE FOR ANY DEVIATION FROM THIS DESIGN; ANY FAILURE TO BUILD THE TRUSS IN CONFORMANCE WITH TPI; OR FABRICATING, HANDLING, SHIPPING, INSTALLING & BRACING OF TRUSSES.
DESIGN CONFORMS WITH APPLICABLE PROVISIONS OF NDS (NATIONAL DESIGN SPEC, BY AF&PA) AND TPI. ITW BCG CONNECTOR PLATES ARE MADE OF 20/18/16GA (W,H/SS/K) ASTM A653 GRADE 40/60 (W, K/H,SS) GALV. STEEL. APPLY PLATES TO EACH FACE OF TRUSS AND, UNLESS OTHERWISE LOCATED ON THIS DESIGN, POSITION PER DRAWINGS 160A-Z. ANY INSPECTION OF PLATES FOLLOWED BY (I) SHALL BE PER ANNEX A3 OF TPI1-2002 SEC.3. A SEAL ON THIS DRAWING INDICATES ACCEPTANCE OF PROFESSIONAL ENGINEERING RESPONSIBILITY SOLELY FOR THE TRUSS COMPONENT DESIGN SHOWN. THE SUITABILITY AND USE OF THIS COMPONENT FOR ANY BUILDING IS THE RESPONSIBILITY OF THE BUILDING DESIGNER PER ANSI/TPI 1 SEC. 2.

DOUGLAS FLEMING LICENSE No. 66648 STATE OF FLORIDA PROFESSIONAL ENGINEER
Dec 18 '09

TC LL	20.0 PSF	REF	R8228- 60360
TC DL	10.0 PSF	DATE	12/18/09
BC DL	10.0 PSF	DRW	HCUSR8228 09352019
BC LL	0.0 PSF	HC-ENG	JB/DF *
TOT.LD.	40.0 PSF	SEQN:	67647
DUR.FAC.	1.25	FROM	AH
SPACING	24.0"	JREF-	1TXP8228Z01

(9-244--Fill in later EDGLEY -- , ** - EJ1.4)

Top chord 2x4 SP #2 Dense
Bot chord 2x4 SP #2 Dense

Roof overhang supports 2.00 psf soffit load.

Bottom chord checked for 10.00 psf non-concurrent live load.

MWFRS loads based on trusses located at least 7.50 ft. from roof edge.

110 mph wind, 15.00 ft mean hgt, ASCE 7-05, CLOSED bldg, Located anywhere in roof, CAT II, EXP C, wind TC DL=5.0 psf, wind BC DL=5.0 psf. Iw=1.00 GCpi(+/-)=0.18

Wind reactions based on MWFRS pressures.

Deflection meets L/240 live and L/180 total load.

Provide (2) 16d common nails(0.162"x3.5"), toe nailed at Top chord.
Provide (2) 16d common nails(0.162"x3.5"), toe nailed at Bot chord.

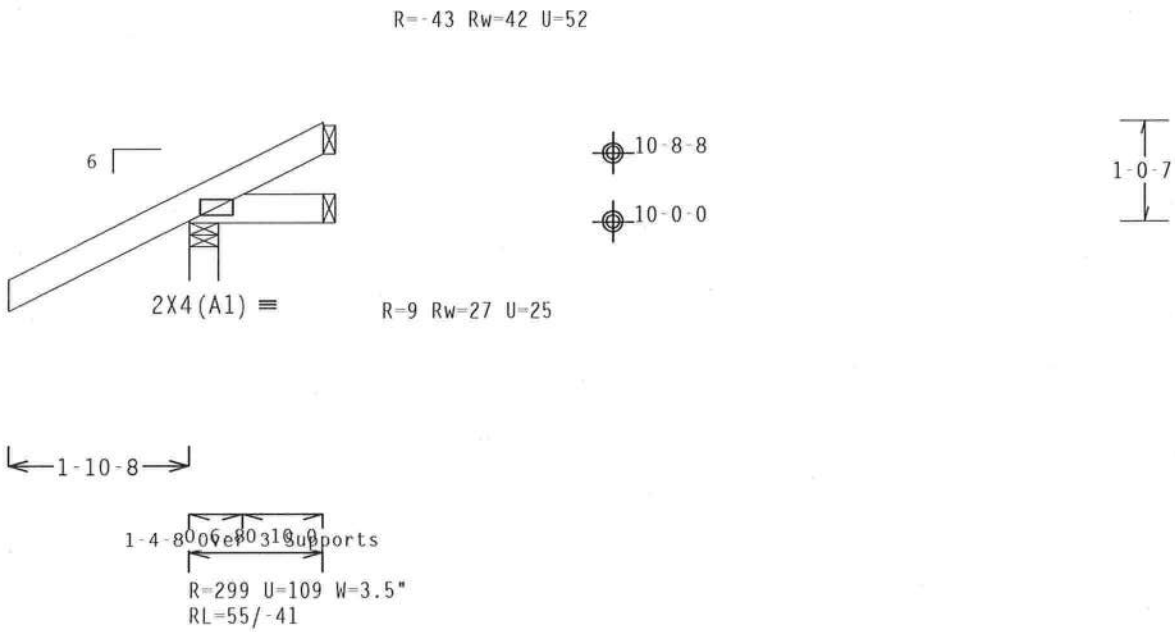

Design Crit: FBC2007Res/TPI-2002(STD)

PLT TYP. Wave | FT/RT=20%(0%)/0(0) | 9.02.00 | QTY:4 | FL/-/4/-/-/R/- | Scale =.5"/Ft.

ALPINE
ITW Building Components Group Inc.
Haines City, FL 33844
FL COA #0278

WARNING TRUSSES REQUIRE EXTREME CARE IN FABRICATION, HANDLING, SHIPPING, INSTALLING AND BRACING. REFER TO BCSI (BUILDING COMPONENT SAFETY INFORMATION), PUBLISHED BY TPI (TRUSS PLATE INSTITUTE, 218 NORTH LEE STREET, SUITE 312, ALEXANDRIA, VA, 22314) AND WTCA (WOOD TRUSS COUNCIL OF AMERICA, 6300 ENTERPRISE LANE, MADISON, WI 53719) FOR SAFETY PRACTICES PRIOR TO PERFORMING THESE FUNCTIONS. UNLESS OTHERWISE INDICATED TOP CHORD SHALL HAVE PROPERLY ATTACHED STRUCTURAL PANELS AND BOTTOM CHORD SHALL HAVE A PROPERLY ATTACHED RIGID CEILING.

IMPORTANT FURNISH A COPY OF THIS DESIGN TO THE INSTALLATION CONTRACTOR. ITW BCG, INC. SHALL NOT BE RESPONSIBLE FOR ANY DEVIATION FROM THIS DESIGN; ANY FAILURE TO BUILD THE TRUSS IN CONFORMANCE WITH TPI; OR FABRICATING, HANDLING, SHIPPING, INSTALLING & BRACING OF TRUSSES.
DESIGN CONFORMS WITH APPLICABLE PROVISIONS OF NDS (NATIONAL DESIGN SPEC. BY AF&PA) AND TPI. ITW BCG CONNECTOR PLATES ARE MADE OF 20/18/16GA (W.H/SS/K) ASTM A653 GRADE 40/60 (W. K/H.SS) GALV. STEEL. APPLY PLATES TO EACH FACE OF TRUSS AND, UNLESS OTHERWISE LOCATED ON THIS DESIGN, POSITION PER DRAWINGS 160A-Z. ANY INSPECTION OF PLATES FOLLOWED BY (1) SHALL BE PER ANNEX A3 OF TPI1-2002 SEC.3. A SEAL ON THIS DRAWING INDICATES ACCEPTANCE OF PROFESSIONAL ENGINEERING RESPONSIBILITY SOLELY FOR THE TRUSS COMPONENT DESIGN SHOWN. THE SUITABILITY AND USE OF THIS COMPONENT FOR ANY BUILDING IS THE RESPONSIBILITY OF THE BUILDING DESIGNER PER ANSI/TPI 1 SEC. 2.

DOUGLAS FLEMING LICENSE No. 66648 STATE OF FLORIDA PROFESSIONAL ENGINEER
DEC 18 '09

TC LL	20.0 PSF	REF	R8228- 60361
TC DL	10.0 PSF	DATE	12/18/09
BC DL	10.0 PSF	DRW	HCUSR8228 09352057
BC LL	0.0 PSF	HC-ENG	JB/DF
TOT.LD.	40.0 PSF	SEQN-	67805
DUR.FAC.	1.25	FROM	AH
SPACING	24.0"	JREF-	1TXP8228Z01

(9-244--Fill in later EDGLEY -- , ** - EJ7H)

Top chord 2x4 SP #2 Dense
Bot chord 2x4 SP #2 Dense

Bottom chord checked for 10.00 psf non-concurrent live load.

MWFRS loads based on trusses located at least 7.50 ft. from roof edge.

110 mph wind, 15.00 ft mean hgt, ASCE 7-05, CLOSED bldg, not located within 4.50 ft from roof edge, CAT II, EXP C, wind TC DL=5.0 psf, wind BC DL=5.0 psf. Iw=1.00 GCpi(+/-)=0.18

Wind reactions based on MWFRS pressures.

Deflection meets L/240 live and L/180 total load.

Provide (2) 16d common nails(0.162"x3.5"), toe nailed at Top chord.
Provide (2) 16d common nails(0.162"x3.5"), toe nailed at Bot chord.

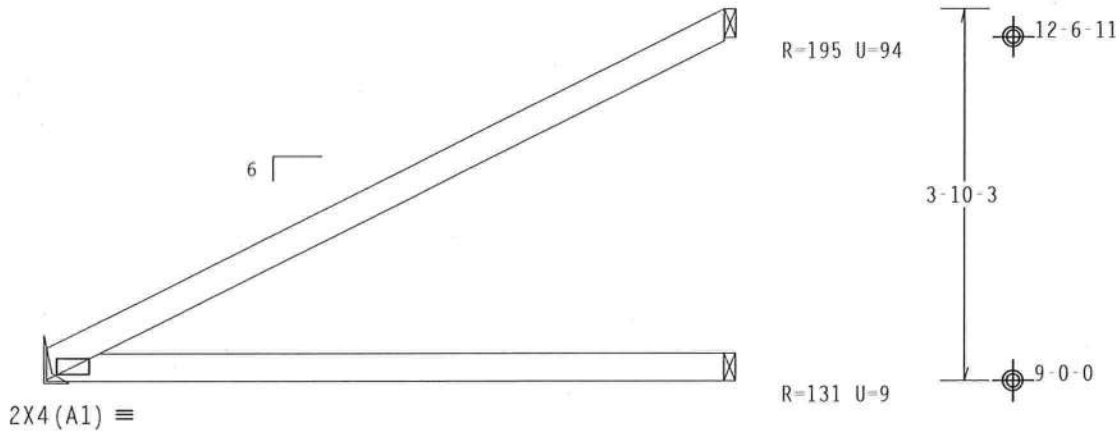

7-0-0 Over 3 Supports

R=294 U=41
RL=119/-26 H=Simpson LUS24
w/ (2) 10d Common, 0.148"x3.0" nails in Truss
w/ (4) 10d, 0.148"x1.5" nails in Girder
Girder is (1)2X0 min. (H)

Design Crit: FBC2007Res/TPI-2002(STD)

PLT TYP. Wave FT/RT=20%(0%)/0(0) 9.02.00/10/10/11 QTY:3 FL/-/4/-/-/R/- Scale =.5"/Ft.

ALPINE
ITW Building Components Group Inc.
Haines City, FL 33844
FL COA #0 278

WARNING TRUSSES REQUIRE EXTREME CARE IN FABRICATION, HANDLING, SHIPPING, INSTALLING AND BRACING. REFER TO BCSI (BUILDING COMPONENT SAFETY INFORMATION), PUBLISHED BY TPI (TRUSS PLATE INSTITUTE, 218 NORTH LEE STREET, SUITE 312, ALEXANDRIA, VA, 22314) AND WTCA (WOOD TRUSS COUNCIL OF AMERICA, 6300 ENTERPRISE LANE, MADISON, WI 53719) FOR SAFETY PRACTICES PRIOR TO PERFORMING THESE FUNCTIONS. UNLESS OTHERWISE INDICATED TOP CHORD SHALL HAVE PROPERLY ATTACHED STRUCTURAL PANELS AND BOTTOM CHORD SHALL HAVE A PROPERLY ATTACHED RIGID CEILING.

IMPORTANTFURNISH A COPY OF THIS DESIGN TO THE INSTALLATION CONTRACTOR. ITW BCG, INC. SHALL NOT BE RESPONSIBLE FOR ANY DEVIATION FROM THIS DESIGN; ANY FAILURE TO BUILD THE TRUSS IN CONFORMANCE WITH TPI; OR FABRICATING, HANDLING, SHIPPING, INSTALLING & BRACING OF TRUSSES.
DESIGN CONFORMS WITH APPLICABLE PROVISIONS OF NDS (NATIONAL DESIGN SPEC. BY AF&PA) AND TPI. ITW BCG CONNECTOR PLATES ARE MADE OF 20/18/16GA (W,H/SS/K) ASTM A653 GRADE 40/60 (H, K/H,SS) GALV. STEEL. APPLY PLATES TO EACH FACE OF TRUSS AND, UNLESS OTHERWISE LOCATED ON THIS DESIGN, POSITION PER DRAWINGS 160A-Z. ANY INSPECTION OF PLATES FOLLOWED BY (1) SHALL BE PER ANNEX A3 OF TPI1-2002 SEC.3. A SEAL ON THIS DRAWING INDICATES ACCEPTANCE OF PROFESSIONAL ENGINEERING RESPONSIBILITY SOLELY FOR THE TRUSS COMPONENT DESIGN SHOWN. THE SUITABILITY AND USE OF THIS COMPONENT FOR ANY BUILDING IS THE RESPONSIBILITY OF THE BUILDING DESIGNER PER ANSI/TPI 1 SEC. 2.

DOUGLAS FLEMING LICENSE No. 66648 STATE OF FLORIDA PROFESSIONAL ENGINEER
DEC 18 '09

TC LL	20.0 PSF	REF	R8228- 60362
TC DL	10.0 PSF	DATE	12/18/09
BC DL	10.0 PSF	DRW	HCUSR8228 09352058
BC LL	0.0 PSF	HC-ENG	JB/DF
TOT.LD.	40.0 PSF	SEQN-	67808
DUR.FAC.	1.25	FROM	AH
SPACING	24.0"	JREF-	1TXP8228Z01

(9-244--Fill in later EDGLEY -- , ** - EJ7G)

Top chord 2x4 SP #2 Dense
Bot chord 2x6 SP #2
Webs 2x4 SP #3

110 mph wind, 15.00 ft mean hgt, ASCE 7-05, CLOSED bldg, not located within 4.50 ft from roof edge, CAT II, EXP C, wind TC DL=5.0 psf, wind BC DL=5.0 psf. Iw=1.00 GCpi(+/-)=0.18

Wind reactions based on MWFRS pressures.

H = recommended connection based on manufacturer tested capacities and calculations. Conditions may exist that require different connections than indicated. Refer to manufacturer publication for additional information.

Special loads
------(Lumber Dur.Fac.=1.25 / Plate Dur.Fac.=1.25)

TC - From	62 plf at	-1.88 to	62 plf at	7.00
BC - From	4 plf at	-1.88 to	4 plf at	0.00
BC - From	20 plf at	0.00 to	20 plf at	7.00
BC -	714 lb Conc. Load at	1.06	, 3.06,	5.06

Right end vertical not exposed to wind pressure.

Roof overhang supports 2.00 psf soffit load.

Deflection meets L/240 live and L/180 total load.

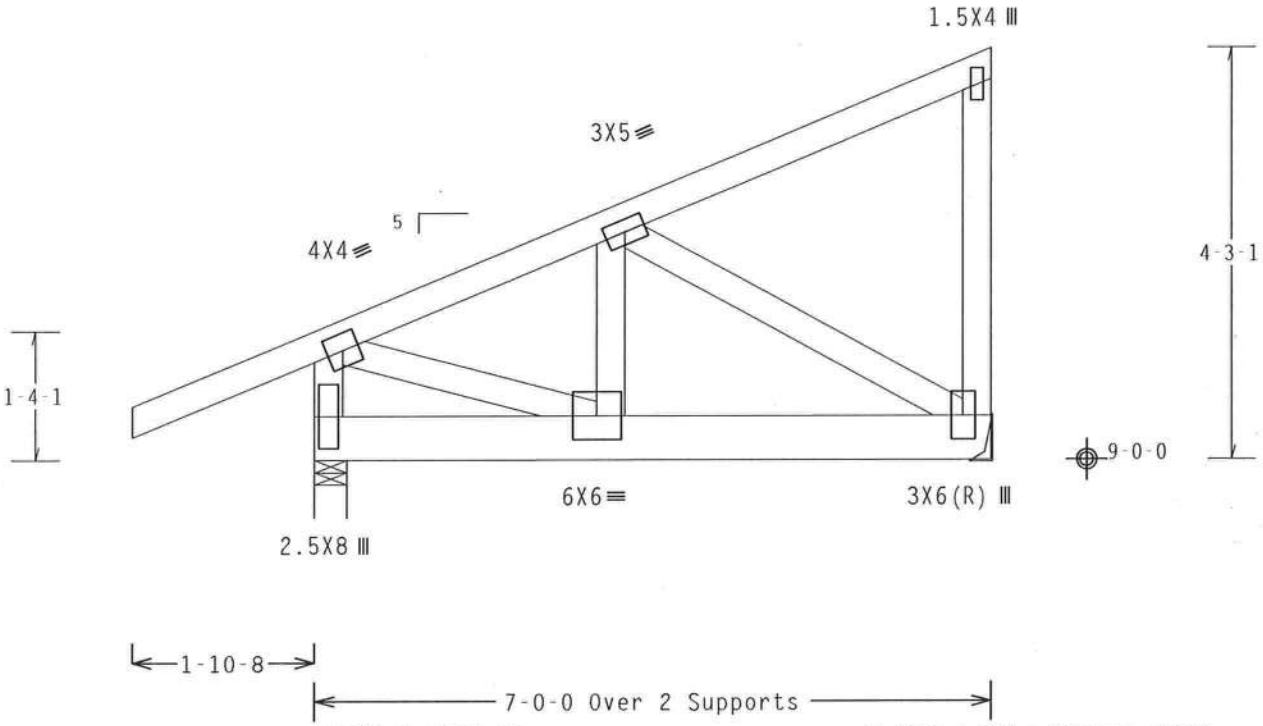

R=1631 U=326 W=4"

R=1206 U=238 H=Simpson HUS26
w/ (4) 10d Common, 0.148"x3.0" nails in Truss
w/ (14) 10d Common, 0.148"x3.0" nails in Girder
Girder is (2)2X6 min. So.Pine

Design Crit: FBC2007Res/TPI-2002(STD)

PLT TYP. Wave FT/RT=20%(0%)/0(0) 9.02.00 QTY:1 FL/-/4/-/-/R/- Scale =.5"/Ft.

ALPINE
ITW Building Components Group Inc.
Haines City, FL 33844
FL COA #0278

WARNING TRUSSES REQUIRE EXTREME CARE IN FABRICATION, HANDLING, SHIPPING, INSTALLING AND BRACING. REFER TO BCSI (BUILDING COMPONENT SAFETY INFORMATION), PUBLISHED BY TPI (TRUSS PLATE INSTITUTE, 218 NORTH LEE STREET, SUITE 312, ALEXANDRIA, VA. 22314) AND WTCA (WOOD TRUSS COUNCIL OF AMERICA, 6300 ENTERPRISE LANE, MADISON, WI 53719) FOR SAFETY PRACTICES PRIOR TO PERFORMING THESE FUNCTIONS. UNLESS OTHERWISE INDICATED TOP CHORD SHALL HAVE PROPERLY ATTACHED STRUCTURAL PANELS AND BOTTOM CHORD SHALL HAVE A PROPERLY ATTACHED RIGID CEILING.

IMPORTANTFURNISH A COPY OF THIS DESIGN TO THE INSTALLATION CONTRACTOR. ITW BCG, INC. SHALL NOT BE RESPONSIBLE FOR ANY DEVIATION FROM THIS DESIGN; ANY FAILURE TO BUILD THE TRUSS IN CONFORMANCE WITH TPI; OR FABRICATING, HANDLING, SHIPPING, INSTALLING & BRACING OF TRUSSES.
DESIGN CONFORMS WITH APPLICABLE PROVISIONS OF NDS (NATIONAL DESIGN SPEC. BY AF&PA) AND TPI. ITW BCG CONNECTOR PLATES ARE MADE OF 20/18/16GA (W,H/SS/K) ASTM A653 GRADE 40/60 (W, K/H,SS) GALV. STEEL. APPLY PLATES TO EACH FACE OF TRUSS AND, UNLESS OTHERWISE LOCATED ON THIS DESIGN, POSITION PER DRAWINGS 160A-Z. ANY INSPECTION OF PLATES FOLLOWED BY (1) SHALL BE PER ANNEX A3 OF TPI1-2002 SEC.3. A SEAL ON THIS DRAWING INDICATES ACCEPTANCE OF PROFESSIONAL ENGINEERING RESPONSIBILITY SOLELY FOR THE TRUSS COMPONENT DESIGN SHOWN. THE SUITABILITY AND USE OF THIS COMPONENT FOR ANY BUILDING IS THE RESPONSIBILITY OF THE BUILDING DESIGNER PER ANSI/TPI 1 SEC. 2.

DOUGLAS FLEMING LICENSE No. 66648 STATE OF FLORIDA PROFESSIONAL ENGINEER

Dec 18 '09

TC LL	20.0 PSF	REF R8228- 60363
TC DL	10.0 PSF	DATE 12/18/09
BC DL	10.0 PSF	DRW HCUSR8228 09352061
BC LL	0.0 PSF	HC-ENG JB/DF
TOT.LD.	40.0 PSF	SEQN- 68171
DUR.FAC.	1.25	
SPACING	24.0"	JREF- 1TXP8228Z01

(9-244--Fill in later EDGLEY -- , ** - KGE)

Top chord 2x4 SP #2 Dense
Bot chord 2x4 SP #2 Dense
Webs 2x4 SP #3
:Stack Chord SC1 2x4 SP #2 Dense::Stack Chord SC2 2x4 SP #2 Dense:

Roof overhang supports 2.00 psf soffit load.

See DWGS A11015050109 & GBLLETIN0109 for more requirements.

Stacked top chord must NOT be notched or cut in area (NNL). Dropped top chord braced at 24" o.c. intervals. Attach stacked top chord (SC) to dropped top chord in notchable area using 3x4 tie-plates 24" o.c. Center plate on stacked/dropped chord interface, plate length perpendicular to chord length. Splice top chord in notchable area using 3x6.

THE BUILDING DESIGNER IS RESPONSIBLE FOR THE DESIGN OF THE ROOF AND CEILING DIAPHRAGMS, GABLE END SHEAR WALLS, AND SUPPORTING SHEAR WALLS. SHEAR WALLS MUST PROVIDE CONTINUOUS LATERAL RESTRAINT TO THE GABLE END. ALL CONNECTIONS TO BE DESIGNED BY THE BUILDING DESIGNER.

110 mph wind, 15.00 ft mean hgt, ASCE 7-05, CLOSED bldg, Located anywhere in roof, CAT II, EXP C, wind TC DL=5.0 psf, wind BC DL=5.0 psf. Iw=1.00 GCpi(+/-)=0.18

Wind reactions based on MWFRS pressures.

Truss spaced at 24.0" OC designed to support 1-0-0 top chord outlookers. Cladding load shall not exceed 10.00 PSF. Top chord must not be cut or notched.

Bottom chord checked for 10.00 psf non-concurrent live load.

Deflection meets L/240 live and L/180 total load.

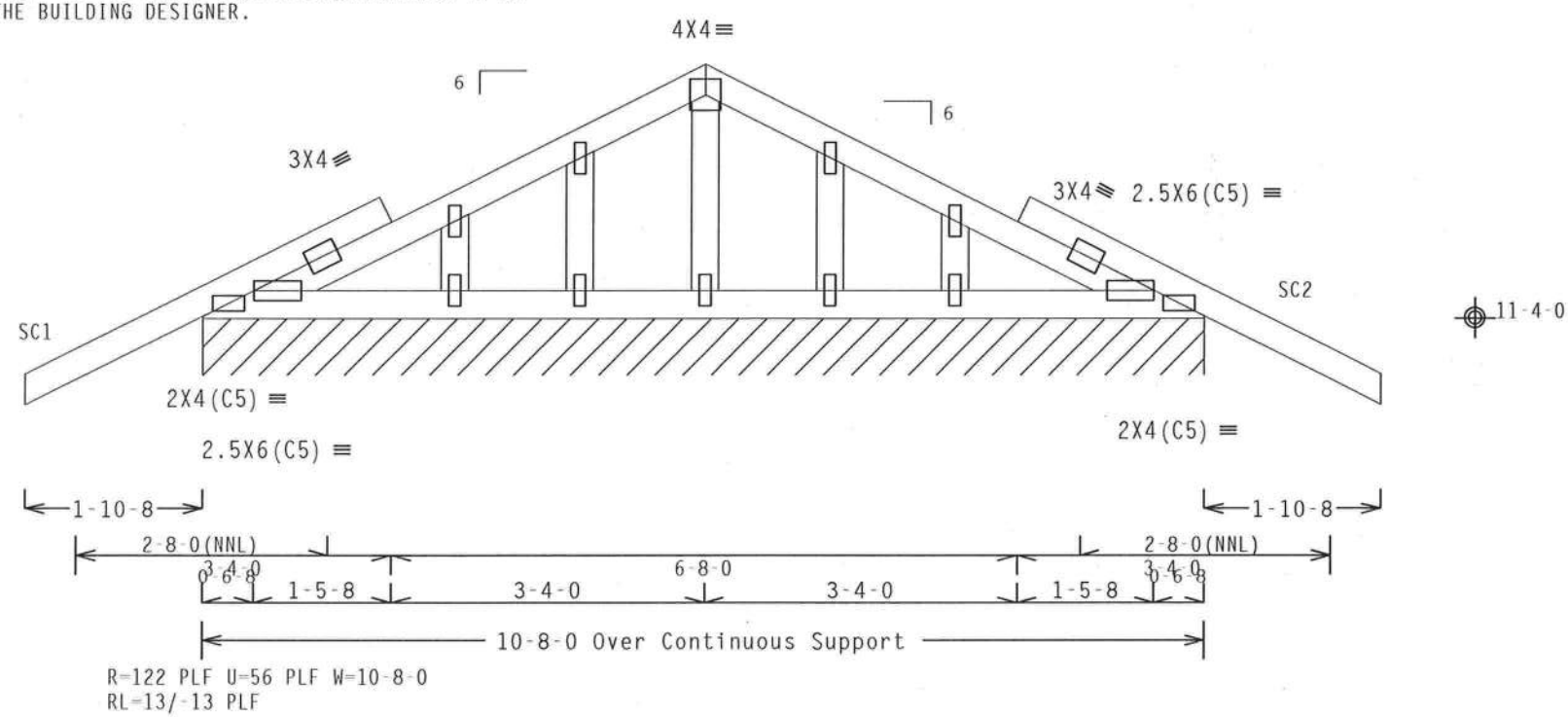

Note: All Plates Are 1.5X4 Except As Shown.

Design Crit: FBC2007Res/TPI-2002(STD)

PLT TYP. Wave FT/RT=20%(0%)/0(0) 9.02.00.06 (1) QTY:1 FL/-/4/-/-/R/- Scale =.5"/Ft.

ALPINE
ITW Building Components Group Inc.
Haines City, FL 33844
FL COA #0278

WARNING TRUSSES REQUIRE EXTREME CARE IN FABRICATION, HANDLING, SHIPPING, INSTALLING AND BRACING. REFER TO BCSI (BUILDING COMPONENT SAFETY INFORMATION), PUBLISHED BY TPI (TRUSS PLATE INSTITUTE, 218 NORTH LEE STREET, SUITE 312, ALEXANDRIA, VA. 22314) AND WTCA (WOOD TRUSS COUNCIL OF AMERICA, 6300 ENTERPRISE LANE, MADISON, WI 53719) FOR SAFETY PRACTICES PRIOR TO PERFORMING THESE FUNCTIONS. UNLESS OTHERWISE INDICATED TOP CHORD SHALL HAVE PROPERLY ATTACHED STRUCTURAL PANELS AND BOTTOM CHORD SHALL HAVE A PROPERLY ATTACHED RIGID CEILING.

IMPORTANTFURNISH A COPY OF THIS DESIGN TO THE INSTALLATION CONTRACTOR. ITW BCG, INC. SHALL NOT BE RESPONSIBLE FOR ANY DEVIATION FROM THIS DESIGN; ANY FAILURE TO BUILD THE TRUSS IN CONFORMANCE WITH TPI; OR FABRICATING, HANDLING, SHIPPING, INSTALLING & BRACING OF TRUSSES. DESIGN CONFORMS WITH APPLICABLE PROVISIONS OF NDS (NATIONAL DESIGN SPEC. BY AF&PA) AND TPI. ITW BCG CONNECTOR PLATES ARE MADE OF 20/18/16GA (W,H/SS/K) ASTM A653 GRADE 40/60 (W, K/H,SS) GALV. STEEL. APPLY PLATES TO EACH FACE OF TRUSS AND, UNLESS OTHERWISE LOCATED ON THIS DESIGN, POSITION PER DRAWINGS 160A-Z. ANY INSPECTION OF PLATES FOLLOWED BY (I) SHALL BE PER ANNEX A3 OF TPI1-2002 SEC.3. A SEAL ON THIS DRAWING INDICATES ACCEPTANCE OF PROFESSIONAL ENGINEERING RESPONSIBILITY SOLELY FOR THE TRUSS COMPONENT DESIGN SHOWN. THE SUITABILITY AND USE OF THIS COMPONENT FOR ANY BUILDING IS THE RESPONSIBILITY OF THE BUILDING DESIGNER PER ANSI/TPI 1 SEC. 2.

DOUGLAS FLEMING LICENSE No. 66648 STATE OF FLORIDA PROFESSIONAL ENGINEER
12/18 '09

TC LL	20.0 PSF	REF	R8228- 60364
TC DL	10.0 PSF	DATE	12/18/09
BC DL	10.0 PSF	DRW	HCUSR8228 09352021
BC LL	0.0 PSF	HC-ENG	JB/DF *
TOT.LD.	40.0 PSF	SEQN-	68336
DUR.FAC.	1.25	FROM	AH
SPACING	24.0"	JREF-	1TXP8228Z01

(9-244--Fill in later EDGLEY -- , ** - K)

Top chord 2x4 SP #2 Dense
Bot chord 2x4 SP #2 Dense
Webs 2x4 SP #3

Roof overhang supports 2.00 psf soffit load.

Bottom chord checked for 10.00 psf non-concurrent live load.

110 mph wind, 15.00 ft mean hgt, ASCE 7-05, CLOSED bldg, Located anywhere in roof, CAT II, EXP C, wind TC DL=5.0 psf, wind BC DL=5.0 psf. Iw=1.00 GCpi(+/-)=0.18

Wind reactions based on MWFRS pressures.

Deflection meets L/240 live and L/180 total load.

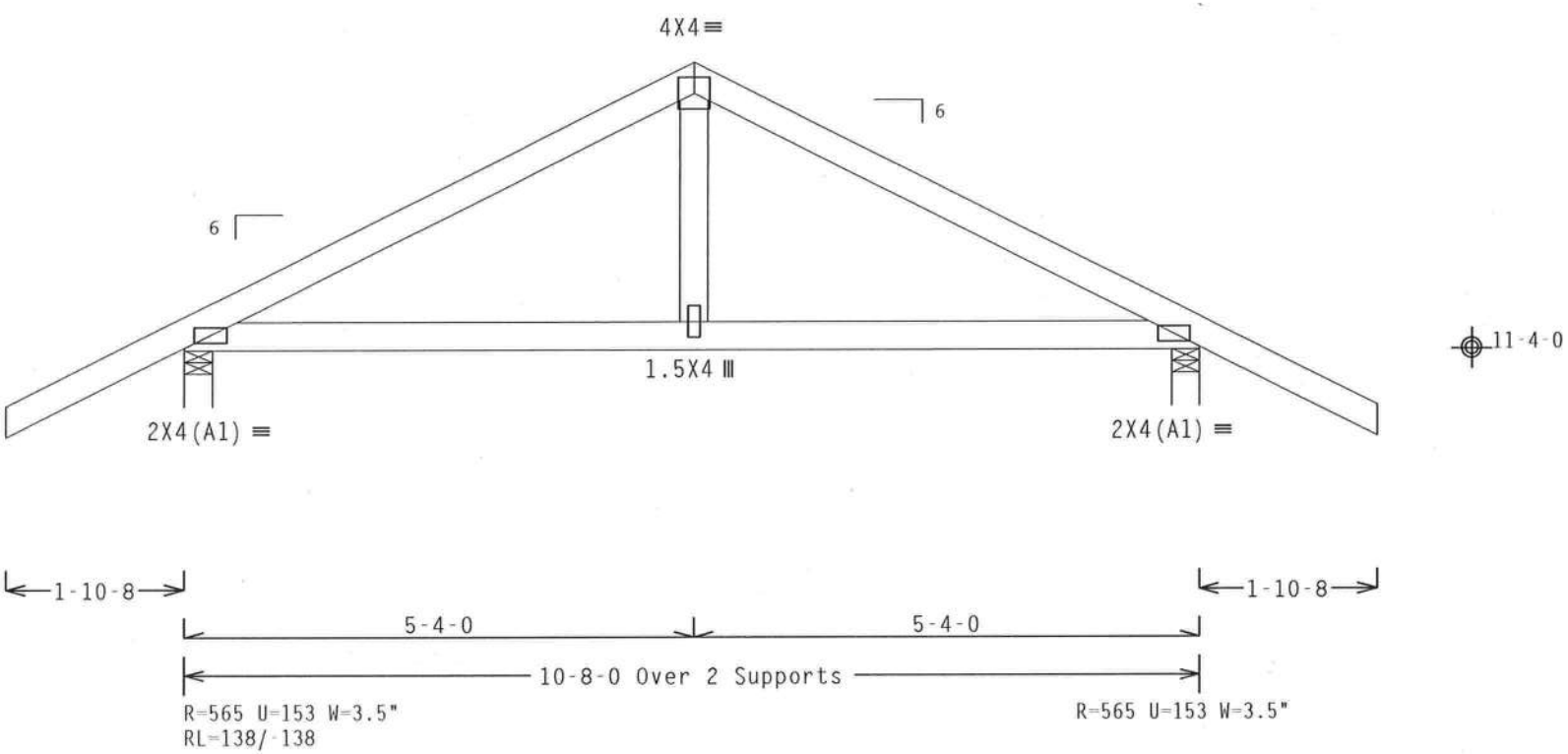

Design Crit: FBC2007Res/TPI-2002(STD)

PLT TYP. Wave | FT/RT=20%(0%)/0(0) | 9.02.00.0 | QTY:1 | FL/-/4/-/-/R/- | Scale =.5"/Ft.

ALPINE
ITW Building Components Group Inc.
Haines City, FL 33844
FL COA #0 278

WARNING TRUSSES REQUIRE EXTREME CARE IN FABRICATION, HANDLING, SHIPPING, INSTALLING AND BRACING. REFER TO BCSI (BUILDING COMPONENT SAFETY INFORMATION), PUBLISHED BY TPI (TRUSS PLATE INSTITUTE, 218 NORTH LEE STREET, SUITE 312, ALEXANDRIA, VA, 22314) AND WTCA (WOOD TRUSS COUNCIL OF AMERICA, 6300 ENTERPRISE LANE, MADISON, WI 53719) FOR SAFETY PRACTICES PRIOR TO PERFORMING THESE FUNCTIONS. UNLESS OTHERWISE INDICATED TOP CHORD SHALL HAVE PROPERLY ATTACHED STRUCTURAL PANELS AND BOTTOM CHORD SHALL HAVE A PROPERLY ATTACHED RIGID CEILING.

IMPORTANTFURNISH A COPY OF THIS DESIGN TO THE INSTALLATION CONTRACTOR. ITW BCG, INC. SHALL NOT BE RESPONSIBLE FOR ANY DEVIATION FROM THIS DESIGN; ANY FAILURE TO BUILD THE TRUSS IN CONFORMANCE WITH TPI; OR FABRICATING, HANDLING, SHIPPING, INSTALLING & BRACING OF TRUSSES. DESIGN CONFORMS WITH APPLICABLE PROVISIONS OF NDS (NATIONAL DESIGN SPEC, BY AF&PA) AND TPI. ITW BCG CONNECTOR PLATES ARE MADE OF 20/18/16GA (W,H/SS/K) ASTM A653 GRADE 40/60 (W, K/H,SS) GALV. STEEL. APPLY PLATES TO EACH FACE OF TRUSS AND, UNLESS OTHERWISE LOCATED ON THIS DESIGN, POSITION PER DRAWINGS 160A-Z. ANY INSPECTION OF PLATES FOLLOWED BY (1) SHALL BE PER ANNEX A3 OF TPI1-2002 SEC.3. A SEAL ON THIS DRAWING INDICATES ACCEPTANCE OF PROFESSIONAL ENGINEERING RESPONSIBILITY SOLELY FOR THE TRUSS COMPONENT DESIGN SHOWN. THE SUITABILITY AND USE OF THIS COMPONENT FOR ANY BUILDING IS THE RESPONSIBILITY OF THE BUILDING DESIGNER PER ANSI/TPI 1 SEC. 2.

DOUGLAS FLEMING LICENSE No. 66648 STATE OF FLORIDA PROFESSIONAL ENGINEER

TC LL	20.0 PSF	REF	R8228- 60365
TC DL	10.0 PSF	DATE	12/18/09
BC DL	10.0 PSF	DRW	HCUSR8228 09352020
BC LL	0.0 PSF	HC-ENG	JB/DF *
TOT.LD.	40.0 PSF	SEQN-	68325
DUR.FAC.	1.25	FROM	AH
SPACING	24.0"	JREF-	1TXP8228Z01

(9-244--Fill in later EDGLEY -- , ** - K1)

Top chord 2x4 SP #2 Dense
Bot chord 2x4 SP #2 Dense
Webs 2x4 SP #3

Roof overhang supports 2.00 psf soffit load.

Bottom chord checked for 10.00 psf non-concurrent live load.

110 mph wind, 15.00 ft mean hgt, ASCE 7-05, CLOSED bldg, not located within 4.50 ft from roof edge, CAT II, EXP C, wind TC DL=5.0 psf, wind BC DL=5.0 psf. Iw=1.00 GCpi(+/-)=0.18

Wind reactions based on MWFRS pressures.

Deflection meets L/240 live and L/180 total load.

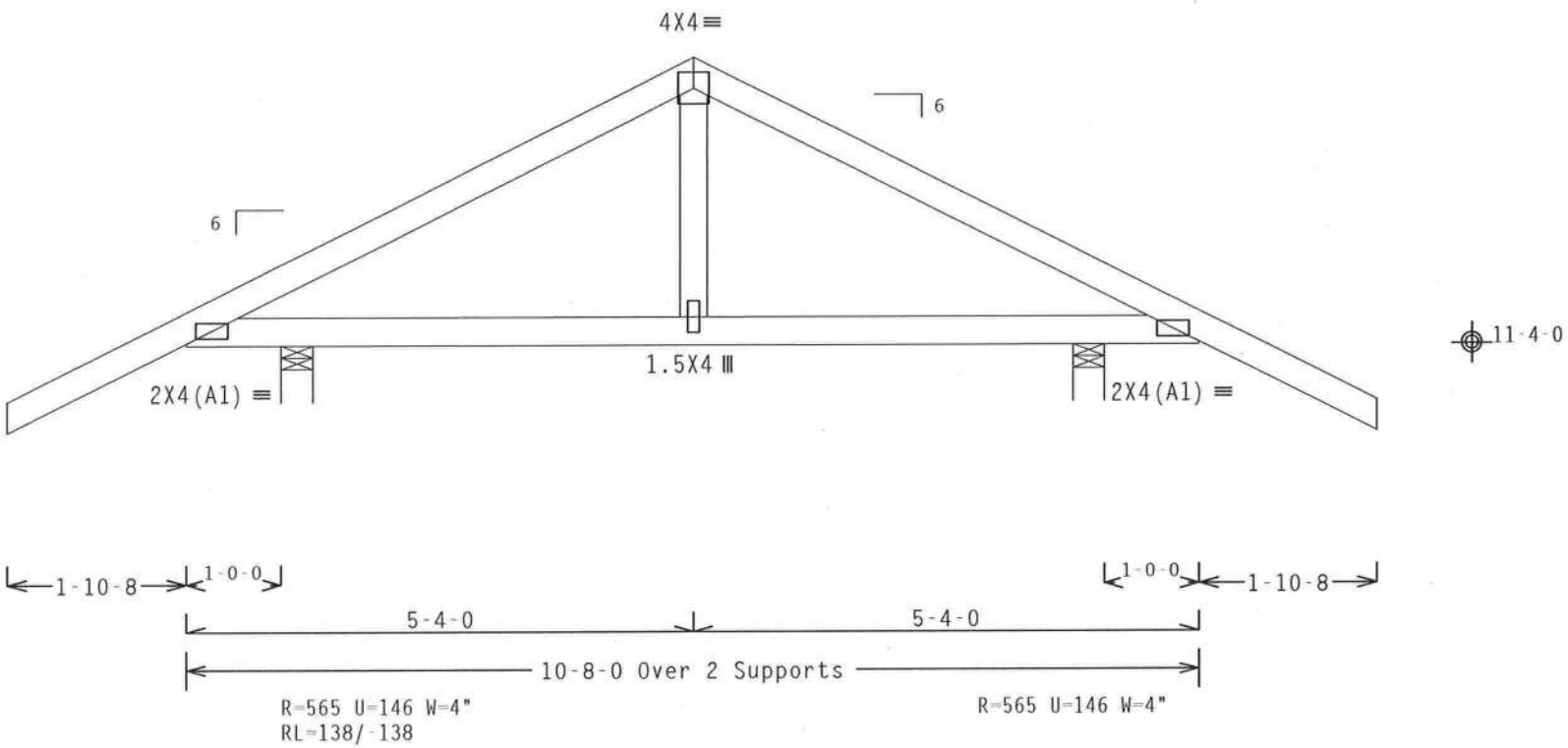

Design Crit: FBC2007Res/TPI-2002(STD)

PLT TYP. Wave | FT/RT=20%(0%)/0(0) | 9.02.00 | QTY:3 | FL/-/4/-/-/R/- | Scale =.5"/Ft.

ALPINE
ITW Building Components Group Inc.
Haines City, FL 33844
FL [illegible] 278

WARNING TRUSSES REQUIRE EXTREME CARE IN FABRICATION, HANDLING, SHIPPING, INSTALLING AND BRACING. REFER TO BCSI (BUILDING COMPONENT SAFETY INFORMATION), PUBLISHED BY TPI (TRUSS PLATE INSTITUTE, 218 NORTH LEE STREET, SUITE 312, ALEXANDRIA, VA, 22314) AND WTCA (WOOD TRUSS COUNCIL OF AMERICA, 6300 ENTERPRISE LANE, MADISON, WI 53719) FOR SAFETY PRACTICES PRIOR TO PERFORMING THESE FUNCTIONS. UNLESS OTHERWISE INDICATED TOP CHORD SHALL HAVE PROPERLY ATTACHED STRUCTURAL PANELS AND BOTTOM CHORD SHALL HAVE A PROPERLY ATTACHED RIGID CEILING.

IMPORTANT FURNISH A COPY OF THIS DESIGN TO THE INSTALLATION CONTRACTOR. ITW BCG, INC. SHALL NOT BE RESPONSIBLE FOR ANY DEVIATION FROM THIS DESIGN; ANY FAILURE TO BUILD THE TRUSS IN CONFORMANCE WITH TPI; OR FABRICATING, HANDLING, SHIPPING, INSTALLING & BRACING OF TRUSSES. DESIGN CONFORMS WITH APPLICABLE PROVISIONS OF NDS (NATIONAL DESIGN SPEC. BY AF&PA) AND TPI. ITW BCG CONNECTOR PLATES ARE MADE OF 20/18/16GA (W,H/SS/K) ASTM A653 GRADE 40/60 (W, K/H,SS) GALV. STEEL. APPLY PLATES TO EACH FACE OF TRUSS AND, UNLESS OTHERWISE LOCATED ON THIS DESIGN, POSITION PER DRAWINGS 160A-Z. ANY INSPECTION OF PLATES FOLLOWED BY (1) SHALL BE PER ANNEX A3 OF TPI1-2002 SEC.3. A SEAL ON THIS DRAWING INDICATES ACCEPTANCE OF PROFESSIONAL ENGINEERING RESPONSIBILITY SOLELY FOR THE TRUSS COMPONENT DESIGN SHOWN. THE SUITABILITY AND USE OF THIS COMPONENT FOR ANY BUILDING IS THE RESPONSIBILITY OF THE BUILDING DESIGNER PER ANSI/TPI 1 SEC. 2.

DOUGLAS FLEMING LICENSE No. 66648 STATE OF FLORIDA PROFESSIONAL ENGINEER
18 '09

TC LL	20.0 PSF	REF	R8228- 60366
TC DL	10.0 PSF	DATE	12/18/09
BC DL	10.0 PSF	DRW	HCUSR8228 09352073
BC LL	0.0 PSF	HC-ENG	JB/DF
TOT.LD.	40.0 PSF	SEQN-	68328
DUR.FAC.	1.25	FROM	AH
SPACING	24.0"	JREF-	1TXP8228Z01

(9-244--Fill in later EDGLEY -- , ** - H1.4L)

Top chord 2x4 SP #2 Dense
Bot chord 2x4 SP #2 Dense
Webs 2x4 SP #3

Roof overhang supports 2.00 psf soffit load.

In lieu of structural panels use purlins to brace all flat TC @ 24" OC.

110 mph wind, 15.00 ft mean hgt, ASCE 7-05, CLOSED bldg, Located anywhere in roof, CAT II, EXP C, wind TC DL=5.0 psf, wind BC DL=5.0 psf. Iw=1.00 GCpi(+/-)=0.18

Wind reactions based on MWFRS pressures.

#1 hip supports 1-4-8 jacks with no webs.

Deflection meets L/240 live and L/180 total load.

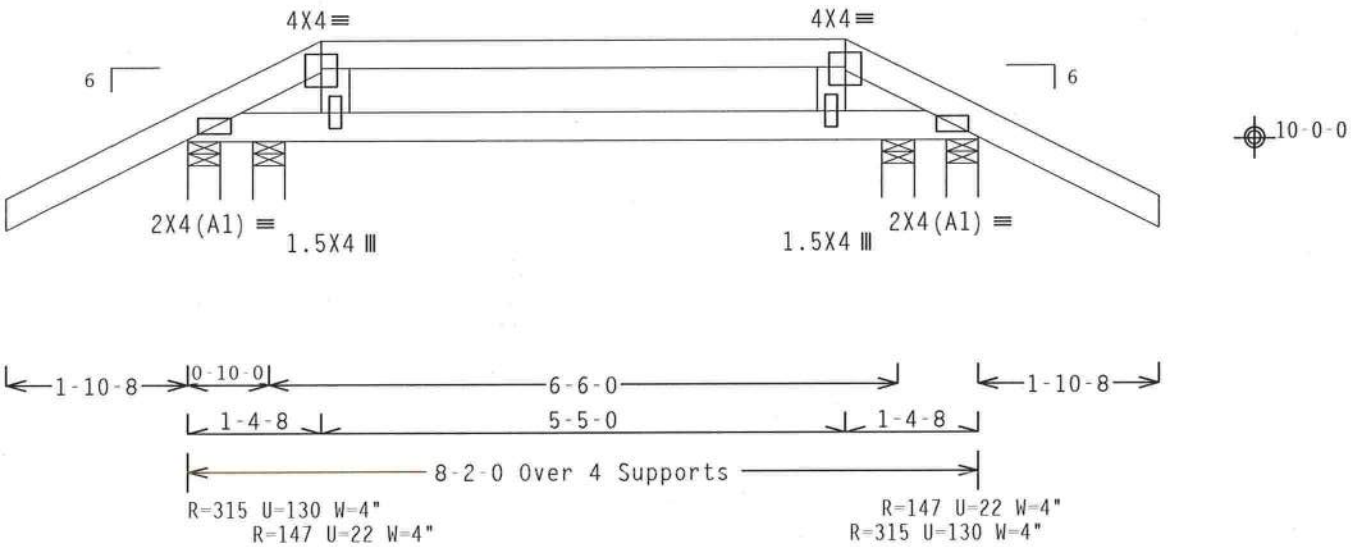

Design Crit: FBC2007Res/TPI-2002(STD)

PLT TYP. Wave | FT/RT=20%(0%)/0(0) | 9.02.00 | QTY:1 | FL/-/4/-/-/R/- | Scale =.5"/Ft.

ALPINE
ITW Building Components Group Inc.
Haines City, FL 33844
FL COA #0278

WARNING TRUSSES REQUIRE EXTREME CARE IN FABRICATION, HANDLING, SHIPPING, INSTALLING AND BRACING. REFER TO BCSI (BUILDING COMPONENT SAFETY INFORMATION), PUBLISHED BY TPI (TRUSS PLATE INSTITUTE, 218 NORTH LEE STREET, SUITE 312, ALEXANDRIA, VA, 22314) AND WTCA (WOOD TRUSS COUNCIL OF AMERICA, 6300 ENTERPRISE LANE, MADISON, WI 53719) FOR SAFETY PRACTICES PRIOR TO PERFORMING THESE FUNCTIONS. UNLESS OTHERWISE INDICATED TOP CHORD SHALL HAVE PROPERLY ATTACHED STRUCTURAL PANELS AND BOTTOM CHORD SHALL HAVE A PROPERLY ATTACHED RIGID CEILING.

IMPORTANTFURNISH A COPY OF THIS DESIGN TO THE INSTALLATION CONTRACTOR. ITW BCG, INC. SHALL NOT BE RESPONSIBLE FOR ANY DEVIATION FROM THIS DESIGN; ANY FAILURE TO BUILD THE TRUSS IN CONFORMANCE WITH TPI; OR FABRICATING, HANDLING, SHIPPING, INSTALLING & BRACING OF TRUSSES. DESIGN CONFORMS WITH APPLICABLE PROVISIONS OF NDS (NATIONAL DESIGN SPEC, BY AF&PA) AND TPI. ITW BCG CONNECTOR PLATES ARE MADE OF 20/18/16GA (W,H/SS/K) ASTM A653 GRADE 40/60 (W, K/H,SS) GALV. STEEL. APPLY PLATES TO EACH FACE OF TRUSS AND, UNLESS OTHERWISE LOCATED ON THIS DESIGN, POSITION PER DRAWINGS 160A-Z. ANY INSPECTION OF PLATES FOLLOWED BY (1) SHALL BE PER ANNEX A3 OF TPI1-2002 SEC.3. A SEAL ON THIS DRAWING INDICATES ACCEPTANCE OF PROFESSIONAL ENGINEERING RESPONSIBILITY SOLELY FOR THE TRUSS COMPONENT DESIGN SHOWN. THE SUITABILITY AND USE OF THIS COMPONENT FOR ANY BUILDING IS THE RESPONSIBILITY OF THE BUILDING DESIGNER PER ANSI/TPI 1 SEC. 2.

DOUGLAS FLEMING LICENSE No. 66648 STATE OF FLORIDA PROFESSIONAL ENGINEER

TC LL	20.0 PSF	REF	R8228- 60367
TC DL	10.0 PSF	DATE	12/18/09
BC DL	10.0 PSF	DRW	HCUSR8228 09352062
BC LL	0.0 PSF	HC-ENG	JB/DF
TOT.LD.	40.0 PSF	SEQN-	68342
DUR.FAC.	1.25	FROM	AH
SPACING	24.0"	JREF-	1TXP8228Z01

CLB WEB BRACE SUBSTITUTION

THIS DETAIL IS TO BE USED WHEN CONTINUOUS LATERAL BRACING (CLB) IS SPECIFIED ON A TRUSS DESIGN BUT AN ALTERNATIVE WEB BRACING METHOD IS DESIRED.

NOTES:

THIS DETAIL IS ONLY APPLICABLE FOR CHANGING THE SPECIFIED CLB SHOWN ON SINGLE PLY SEALED DESIGNS TO T-BRACING OR SCAB BRACING.

ALTERNATIVE BRACING SPECIFIED IN CHART BELOW MAY BE CONSERVATIVE. FOR MINIMUM ALTERNATIVE BRACING, RE-RUN DESIGN WITH APPROPRIATE BRACING.

WEB MEMBER SIZE	SPECIFIED CLB BRACING	ALTERNATIVE BRACING T OR L-BRACE	ALTERNATIVE BRACING SCAB BRACE
2X3 OR 2X4	1 ROW	2X4	1-2X4
2X3 OR 2X4	2 ROWS	2X6	2-2X4
2X6	1 ROW	2X4	1-2X6
2X6	2 ROWS	2X6	2-2X4(*)
2X8	1 ROW	2X6	1-2X8
2X8	2 ROWS	2X6	2-2X6(*)

T-BRACE, L-BRACE AND SCAB BRACE TO BE SAME SPECIES AND GRADE OR BETTER THAN WEB MEMBER UNLESS SPECIFIED OTHERWISE ON ENGINEER'S SEALED DESIGN.

(*) CENTER SCAB ON WIDE FACE OF WEB. APPLY (1) SCAB TO EACH FACE OF WEB.

T-BRACING OR L-BRACING:

APPLY TO EITHER SIDE OF WEB NARROW FACE.
ATTACH WITH 10d BOX OR GUN (0.128"x 3.",MIN) NAILS.
AT 6" O.C.
BRACE IS A MINIMUM 80% OF WEB MEMBER LENGTH

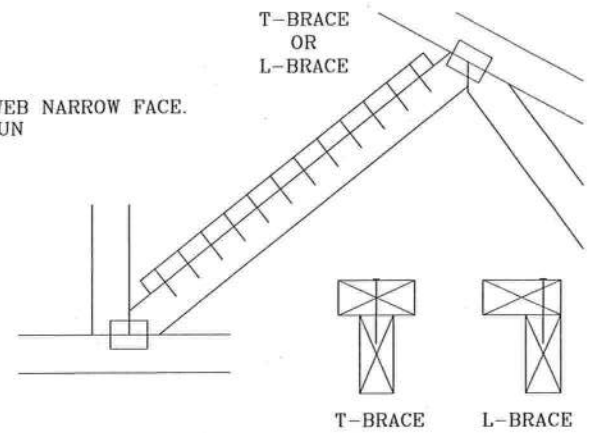

SCAB BRACING:

APPLY SCAB(S) TO WIDE FACE OF WEB.
NO MORE THAN (1) SCAB PER FACE.
ATTACH WITH 10d BOX OR GUN (0.128"x 3.",MIN) NAILS.
AT 6" O.C.
BRACE IS A MINIMUM 80% OF WEB MEMBER LENGTH

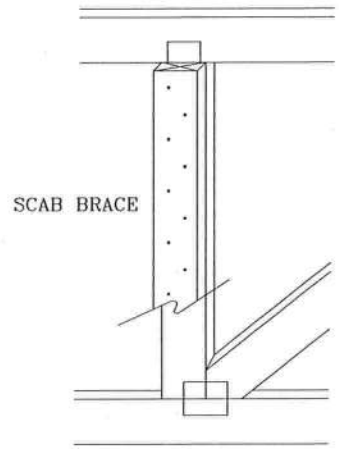

TW Building Components Group Inc.
Earth City, MO 63045

WARNING READ AND FOLLOW ALL NOTES ON THIS SHEET!
Trusses require extreme care in fabricating, handling, shipping, installing and bracing. Refer to and follow BCSI (Building Component Safety Information, by TPI and WTCA) for safety practices prior to performing these functions. Installers shall provide temporary bracing per BCSI. Unless noted otherwise, top chord shall have properly attached structural panels and bottom chord shall have a properly attached rigid ceiling. Locations shown for permanent lateral restraint of webs shall have bracing installed per BCSI sections B3 & B7. See this job's general notes page for more information.

IMPORTANT FURNISH COPY OF THIS DESIGN TO INSTALLATION CONTRACTOR.
ITW Building Components Group Inc. (ITWBCG) shall not be responsible for any deviation from this design, any failure to build the truss in conformance with TPI, or fabricating, handling, shipping, installing & bracing of trusses. ITWBCG connector plates are made of 20/18/16GA (W,H/S/K) ASTM A653 grade 37/40/50 (K/W/H,S) galv. steel. Apply plates to each face of truss, positioned as shown above and on Joint Details. A seal on this drawing or cover page indicates acceptance and professional engineering responsibility solely for the truss component design shown. The suitability and use of this component for any building is the responsibility of the Building Designer per ANST/TPI 1 Sec. 2.
ITW-BCG: www.itwbcg.com; TPI: www.tpinst.com; WTCA: www.sbcindustry.com; ICC: www.iccsafe.org

DOUGLAS FLEMING LICENSE No. 66648 STATE OF FLORIDA PROFESSIONAL ENGINEER
DEC 18 '09

TC LL	PSF	REF CLB SUBST.
TC DL	PSF	DATE 1/1/09
BC DL	PSF	DRWG BRCLBSUB0109
BC LL	PSF	
OT. LD.	PSF	
DUR. FAC.		
SPACING		

NAIL SPACING DETAIL

MINIMUM SPACING FOR SINGLE BLOCK IS SHOWN. DOUBLE NAIL SPACINGS AND STAGGER NAILING FOR TWO BLOCKS. GREATER SPACING MAY BE REQUIRED TO AVOID SPLITTING.

BLOCK LOCATION, SIZE, LENGTH,GRADE AND TOTAL NUMBER AND TYPE OF NAILS ARE TO BE SPECIFIED ON SEALED DESIGN REFERENCING THIS DETAIL.

LOAD PERPENDICULAR TO GRAIN
A – EDGE DISTANCE AND SPACING BETWEEN STAGGERED ROWS OF NAILS (6 NAIL DIAMETERS)
B – SPACING OF NAILS IN A ROW (12 NAIL DIAMETERS)
C – END DISTANCE (15 NAIL DIAMETERS)

LOAD PARALLEL TO GRAIN
A – EDGE DISTANCE (6 NAIL DIAMETERS)
C – SPACING OF NAILS IN A ROW AND END DISTANCE (15 NAIL DIAMETERS)
D – SPACING BETWEEN STAGGERED ROWS OF NAILS (7 1/2 NAIL DIAMETERS)

IF NAIL HOLES ARE PREBORED, SOME SPACING MAY BE REDUCED BY THE AMOUNTS GIVEN BELOW:
* SPACING MAY BE REDUCED BY 50%
** SPACING MAY BE REDUCED BY 33%

MINIMUM NAIL SPACING DISTANCES

NAIL TYPE	DISTANCES A	B*	C**	D
8d BOX (0.113"X 2.5",MIN)	3/4"	1 3/8"	1 3/4"	7/8"
10d BOX (0.128"X 3.",MIN)	7/8"	1 5/8"	2"	1"
12d BOX (0.128"X 3.25",MIN)	7/8"	1 5/8"	2"	1"
16d BOX (0.135"X 3.5",MIN)	7/8"	1 5/8"	2 1/8"	1 1/8"
20d BOX (0.148"X 4.",MIN)	1"	1 7/8"	2 1/4"	1 1/8"
8d COMMON (0.131"X 2.5",MIN)	7/8"	1 5/8"	2"	1"
10d COMMON (0.148"X 3.",MIN)	1"	1 7/8"	2 1/4"	1 1/8"
12d COMMON (0.148"X 3.25",MIN)	1"	1 7/8"	2 1/4"	1 1/8"
16d COMMON (0.162"X 3.5",MIN)	1'	2"	2 1/2"	1 1/4"
GUN (0.120"X 2.5",MIN)	3/4"	1 1/2"	1 7/8"	1"
GUN (0.131"X 2.5",MIN)	7/8"	1 5/8"	2"	1"
GUN (0.120"X 3.",MIN)	3/4"	1 1/2"	1 7/8"	1"
GUN (0.131"X 3.",MIN)	7/8"	1 5/8"	2"	1"

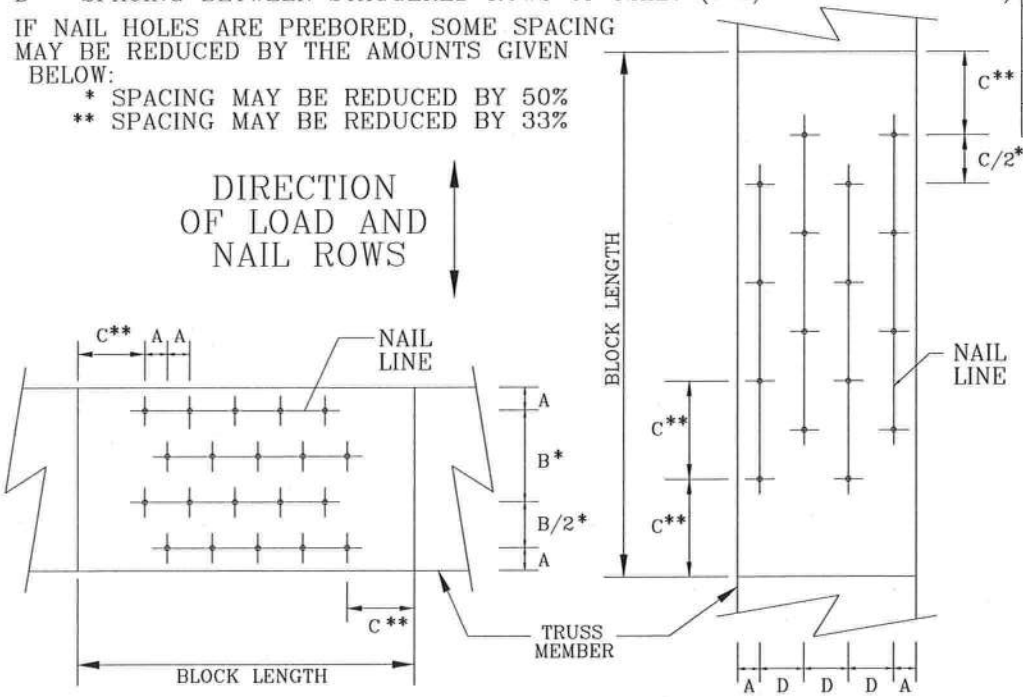

LOAD APPLIED PERPENDICULAR TO GRAIN

LOAD APPLIED PARALLEL TO GRAIN

ITW Building Components Group Inc.

Earth City, MO 63045

WARNING READ AND FOLLOW ALL NOTES ON THIS SHEET!
Trusses require extreme care in fabricating, handling, shipping, installing and bracing. Refer to and follow BCSI (Building Component Safety Information, by TPI and WTCA) for safety practices prior to performing these functions. Installers shall provide temporary bracing per BCSI. Unless noted otherwise, top chord shall have properly attached structural panels and bottom chord shall have a properly attached rigid ceiling. Locations shown for permanent lateral restraint of webs shall have bracing installed per BCSI sections B3 & B7. See this job's general notes page for more information.

IMPORTANT FURNISH COPY OF THIS DESIGN TO INSTALLATION CONTRACTOR.
ITW Building Components Group Inc. (ITWBCG) shall not be responsible for any deviation from this design, any failure to build the truss in conformance with TPI, or fabricating, handling, shipping, installing & bracing of trusses. ITWBCG connector plates are made of 20/18/16GA (W,H/S/K) ASTM A653 grade 37/40/60 (K/W/H,S) galv. steel. Apply plates to each face of truss, positioned as shown above and on Joint Details. A seal on this drawing or cover page indicates acceptance and professional engineering responsibility solely for the truss component design shown. The suitability and use of this component for any building is the responsibility of the Building Designer per ANST/TPI 1 Sec. 2.
ITW-BCG: www.itwbcg.com; TPI: www.tpinst.com; WTCA: www.sbcindustry.com; ICC: www.iccsafe.org

DOUGLAS FLEMING LICENSE No. 66648 STATE OF FLORIDA PROFESSIONAL ENGINEER

Dec 8 '09

REF	NAIL SPACE
DATE	1/1/09
DRWG	CNNAILSP0109

* HIP FRAME DETAILS

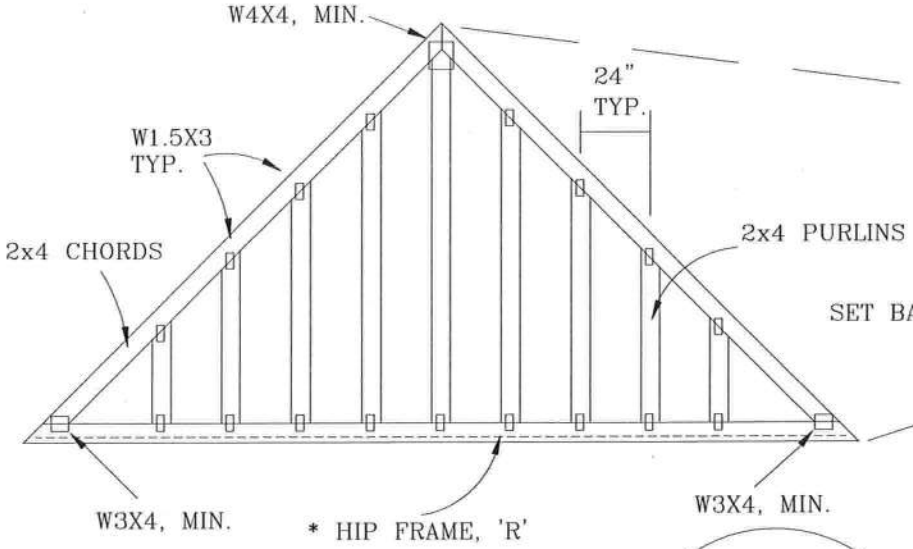

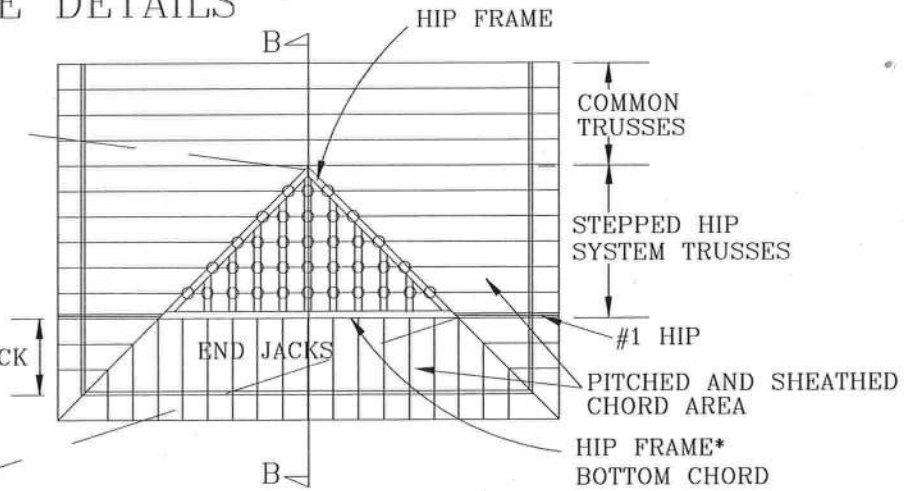

o– ATTACH HIP FRAME TO FLAT CHORDS OF STEPPED HIPS AT ALL OVERLAPPING POINTS WITH 2–10d (0.148"x3") COMMON NAILS. BOTTOM CHORD OF HIP FRAME TO BE ATTACHED TO #1 HIP WITH 10d COMMON (0.148"x3") NAILS @ 6" O.C. MAXIMUM SPACING.

HIP FRAME STOPS AT PLUMB CUT OF JACKS TO MAINTAIN PITCH CONTINUITY.

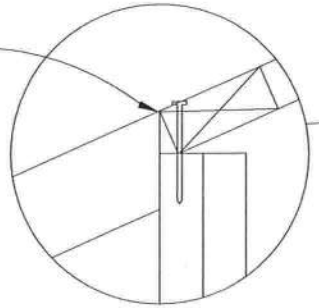

SECTION B–B

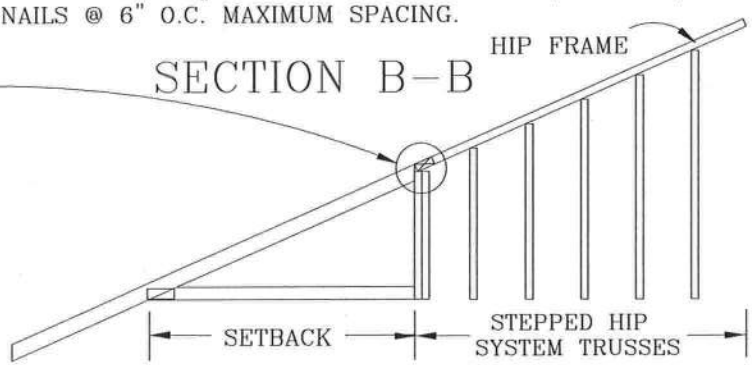

USE THIS DETAIL FOR ASCE 7–02 OR ASCE 7–05 WIND, 110 MPH, 30' MEAN HEIGHT, ENCLOSED BUILDING, EXP. C, RESIDENTIAL, WIND TC DL=4.2 PSF, Kzt=1.00

* HIP FRAME LUMBER IS SPF, SO. PINE, HF, OR DFL STANDARD, STUD GRADE, OR BETTER.

SEE ENGINEER'S SEALED DESIGN FOR SETBACK, LUMBER, PLATING, LOADING AND DURATION FACTOR REQUIRED.

'R' HIP FRAME CHORDS MAY BE TRIMMED UP TO 2" TO FIT. PURLINS MUST BE INTACT AND PROPERLY ATTACHED.

HIP FRAME – PROVIDED BY TRUSS MANUFACTURER. HIP FRAME IS DESIGNED TO PROVIDE BRACING FOR FLAT TOP CHORDS OF HIP FRAME SYSTEM WHERE INDICATED. STRUCTURAL PANELS MUST BE PROPERLY ATTACHED DIRECTLY TO HIP FRAME PURLINS.

ITW Building Components Group Inc.

Earth City, MO 63045

WARNING READ AND FOLLOW ALL NOTES ON THIS SHEET!
Trusses require extreme care in fabricating, handling, shipping, installing and bracing. Refer to and follow BCSI (Building Component Safety Information, by TPI and WTCA) for safety practices prior to performing these functions. Installers shall provide temporary bracing per BCSI. Unless noted otherwise, top chord shall have properly attached structural panels and bottom chord shall have a properly attached rigid ceiling. Locations shown for permanent lateral restraint of webs shall have bracing installed per BCSI sections B3 & B7. See this job's general notes page for more information.

IMPORTANT FURNISH COPY OF THIS DESIGN TO INSTALLATION CONTRACTOR.
ITW Building Components Group Inc. (ITWBCG) shall not be responsible for any deviation from this design, any failure to build the truss in conformance with TPI, or fabricating, handling, shipping, installing & bracing of trusses. ITWBCG connector plates are made of 20/18/16GA (W,H/S/K) ASTM A653 grade 37/40/60 (K/W/H,S) galv. steel. Apply plates to each face of truss, positioned as shown above and on Joint Details. A seal on this drawing or cover page indicates acceptance and professional engineering responsibility solely for the truss component design shown. The suitability and use of this component for any building is the responsibility of the Building Designer per ANST/TPI 1 Sec. 2.
ITW-BCG: www.itwbcg.com; TPI: www.tpinst.com; WTCA: www.sbcindustry.com; ICC: www.iccsafe.org

DOUGLAS FLEMING LICENSE No. 66648 STATE OF FLORIDA PROFESSIONAL ENGINEER
Dec 18 '09

REF	HIP FRAME
DATE	1/1/09
DRWG	HIPFRAME0109

GABLE STUD REINFORCEMENT DETAIL

ASCE 7-05: 110 MPH WIND SPEED, 15' MEAN HEIGHT, ENCLOSED, I = 1.00, EXPOSURE C, Kzt = 1.00

MAX GABLE VERTICAL LENGTH

2X4 GABLE VERTICAL SPACING	SPECIES	BRACE GRADE	NO BRACES	(1) 1X4 "L" BRACE * GROUP A	(1) 1X4 "L" BRACE * GROUP B	(1) 2X4 "L" BRACE * GROUP A	(1) 2X4 "L" BRACE * GROUP B	(2) 2X4 "L" BRACE ** GROUP A	(2) 2X4 "L" BRACE ** GROUP B	(1) 2X6 "L" BRACE * GROUP A	(1) 2X6 "L" BRACE * GROUP B	(2) 2X6 "L" BRACE ** GROUP A	(2) 2X6 "L" BRACE ** GROUP B
24" O.C.	SPF HF	#1 / #2	3' 10"	6' 8"	6' 10"	7' 11"	8' 1"	9' 5"	9' 8"	12' 5"	12' 9"	14' 0"	14' 0"
		#3	3' 9"	6' 0"	6' 0"	7' 11"	7' 11"	9' 5"	9' 5"	12' 4"	12' 4"	14' 0"	14' 0"
		STUD	3' 9"	6' 0"	6' 0"	7' 11"	7' 11"	9' 5"	9' 5"	12' 3"	12' 3"	14' 0"	14' 0"
		STANDARD	3' 9"	5' 2"	5' 2"	6' 9"	6' 9"	9' 1"	9' 1"	10' 7"	10' 7"	14' 0"	14' 0"
	SP DFL	#1	4' 3"	6' 8"	7' 2"	7' 11"	8' 6"	9' 5"	10' 2"	12' 5"	13' 5"	14' 0"	14' 0"
		#2	4' 2"	6' 8"	7' 2"	7' 11"	8' 6"	9' 5"	10' 2"	12' 5"	13' 5"	14' 0"	14' 0"
		#3	4' 0"	6' 2"	6' 2"	7' 11"	8' 1"	9' 5"	9' 11"	12' 5"	12' 8"	14' 0"	14' 0"
		STUD	4' 0"	6' 1"	6' 1"	7' 11"	8' 0"	9' 5"	9' 11"	12' 5"	12' 6"	14' 0"	14' 0"
		STANDARD	3' 10"	5' 3"	5' 3"	6' 11"	6' 11"	9' 4"	9' 4"	10' 10"	10' 10"	14' 0"	14' 0"
16" O.C.	SPF HF	#1 / #2	4' 5"	7' 8"	7' 10"	9' 1"	9' 4"	10' 10"	11' 1"	14' 0"	14' 0"	14' 0"	14' 0"
		#3	4' 4"	7' 4"	7' 4"	9' 1"	9' 1"	10' 10"	10' 10"	14' 0"	14' 0"	14' 0"	14' 0"
		STUD	4' 4"	7' 4"	7' 4"	9' 1"	9' 1"	10' 10"	10' 10"	14' 0"	14' 0"	14' 0"	14' 0"
		STANDARD	4' 4"	6' 4"	6' 4"	8' 4"	8' 4"	10' 10"	10' 10"	12' 11"	12' 11"	14' 0"	14' 0"
	SP DFL	#1	4' 10"	7' 8"	8' 3"	9' 1"	9' 9"	10' 10"	11' 8"	14' 0"	14' 0"	14' 0"	14' 0"
		#2	4' 9"	7' 8"	8' 3"	9' 1"	9' 9"	10' 10"	11' 8"	14' 0"	14' 0"	14' 0"	14' 0"
		#3	4' 6"	7' 7"	7' 7"	9' 1"	9' 6"	10' 10"	11' 4"	14' 0"	14' 0"	14' 0"	14' 0"
		STUD	4' 6"	7' 6"	7' 6"	9' 1"	9' 6"	10' 10"	11' 4"	14' 0"	14' 0"	14' 0"	14' 0"
		STANDARD	4' 5"	6' 5"	6' 5"	8' 6"	8' 6"	10' 10"	11' 1"	13' 3"	13' 3"	14' 0"	14' 0"
12" O.C.	SPF HF	#1 / #2	4' 11"	8' 5"	8' 8"	10' 0"	10' 3"	11' 11"	12' 3"	14' 0"	14' 0"	14' 0"	14' 0"
		#3	4' 9"	8' 5"	8' 5"	10' 0"	10' 0"	11' 11"	11' 11"	14' 0"	14' 0"	14' 0"	14' 0"
		STUD	4' 9"	8' 5"	8' 5"	10' 0"	10' 0"	11' 11"	11' 11"	14' 0"	14' 0"	14' 0"	14' 0"
		STANDARD	4' 9"	7' 3"	7' 3"	9' 7"	9' 7"	11' 11"	11' 11"	14' 0"	14' 0"	14' 0"	14' 0"
	SP DFL	#1	5' 4"	8' 5"	9' 1"	10' 0"	10' 9"	11' 11"	12' 10"	14' 0"	14' 0"	14' 0"	14' 0"
		#2	5' 3"	8' 5"	9' 1"	10' 0"	10' 9"	11' 11"	12' 10"	14' 0"	14' 0"	14' 0"	14' 0"
		#3	5' 0"	8' 5"	8' 5"	10' 0"	10' 6"	11' 11"	12' 6"	14' 0"	14' 0"	14' 0"	14' 0"
		STUD	5' 0"	8' 5"	8' 7"	10' 0"	10' 6"	11' 11"	12' 6"	14' 0"	14' 0"	14' 0"	14' 0"
		STANDARD	4' 11"	7' 5"	7' 5"	9' 10"	9' 10"	11' 11"	12' 3"	14' 0"	14' 0"	14' 0"	14' 0"

BRACING GROUP SPECIES AND GRADES:

GROUP A:

SPRUCE-PINE-FIR

#1 / #2	STANDARD
#3	STUD

HEM-FIR

#2	STUD
#3	STANDARD

DOUGLAS FIR-LARCH

#3
STUD
STANDARD

SOUTHERN PINE

#3
STUD
STANDARD

GROUP B:

HEM-FIR

#1 & BTR
#1

SOUTHERN PINE

#1
#2

DOUGLAS FIR-LARCH

#1
#2

GABLE TRUSS DETAIL NOTES:

LIVE LOAD DEFLECTION CRITERIA IS L/240.

PROVIDE UPLIFT CONNECTIONS FOR 80 PLF OVER CONTINUOUS BEARING (5 PSF TC DEAD LOAD).

GABLE END SUPPORTS LOAD FROM 4' 0" OUTLOOKERS WITH 2' 0" OVERHANG, OR 12" PLYWOOD OVERHANG.

ATTACH EACH "L" BRACE WITH 10d NAILS. (0.128"x3" min)

* FOR (1) "L" BRACE: SPACE NAILS AT 2" O.C. IN 18" END ZONES AND 4" O.C. BETWEEN ZONES.

** FOR (2) "L" BRACES: SPACE NAILS AT 3" O.C. IN 18" END ZONES AND 6" O.C. BETWEEN ZONES.

"L" BRACING MUST BE A MINIMUM OF 80% OF WEB MEMBER LENGTH.

GABLE VERTICAL PLATE SIZES

VERTICAL LENGTH	NO SPLICE
LESS THAN 4' 0"	1X4 OR 2X3
GREATER THAN 4' 0", BUT LESS THAN 11' 6"	2.5X4
GREATER THAN 11' 6"	3X4

\+ REFER TO COMMON TRUSS DESIGN FOR PEAK, SPLICE, AND HEEL PLATES.

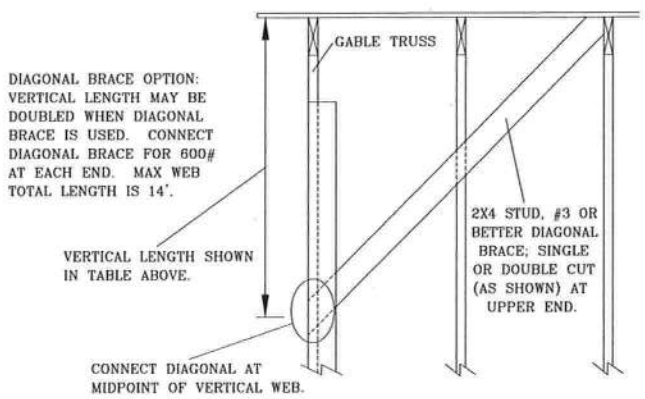

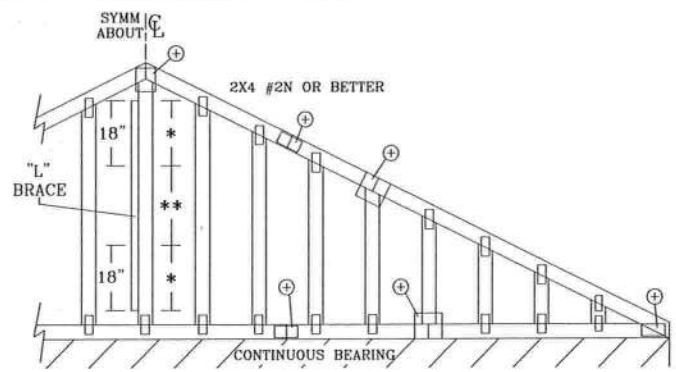

REFER TO CHART ABOVE FOR MAX GABLE VERTICAL LENGTH.

ITW Building Components Group Inc.

Earth City, MO 63045

WARNING READ AND FOLLOW ALL NOTES ON THIS SHEET!
Trusses require extreme care in fabricating, handling, shipping, installing and bracing. Refer to and follow BCSI (Building Component Safety Information, by TPI and WTCA) for safety practices prior to performing these functions. Installers shall provide temporary bracing per BCSI. Unless noted otherwise, top chord shall have properly attached structural panels and bottom chord shall have a properly attached rigid ceiling. Locations shown for permanent lateral restraint of webs shall have bracing installed per BCSI sections B3 & B7. See this job's general notes page for more information.

IMPORTANT FURNISH COPY OF THIS DESIGN TO INSTALLATION CONTRACTOR.
ITW Building Components Group Inc. (ITWBCG) shall not be responsible for any deviation from this design, any failure to build the truss in conformance with TPI, or fabricating, handling, shipping, installing & bracing of trusses. ITWBCG connector plates are made of 20/18/16GA (W,H/S/K) ASTM A653 grade 37/40/60 (K/W/H,S) galv. steel. Apply plates to each face of truss, positioned as shown above and on Joint Details. A seal on this drawing or cover page indicates acceptance and professional engineering responsibility solely for the truss component design shown. The suitability and use of this component for any building is the responsibility of the Building Designer per ANST/TPI 1 Sec. 2.
ITW-BCG: www.itwbcg.com; TPI: www.tpinst.com; WTCA: www.sbcindustry.com; ICC: www.iccsafe.org

DOUGLAS FLEMING LICENSE No. 66648 STATE OF FLORIDA PROFESSIONAL ENGINEER
Dec 18 09

MAX. TOT. LD. 60 PSF

MAX. SPACING 24.0"

REF	ASCE7-05-GAB11015
DATE	1/1/09
DRWG	A11015050109

GABLE DETAIL
FOR LET-IN VERTICALS

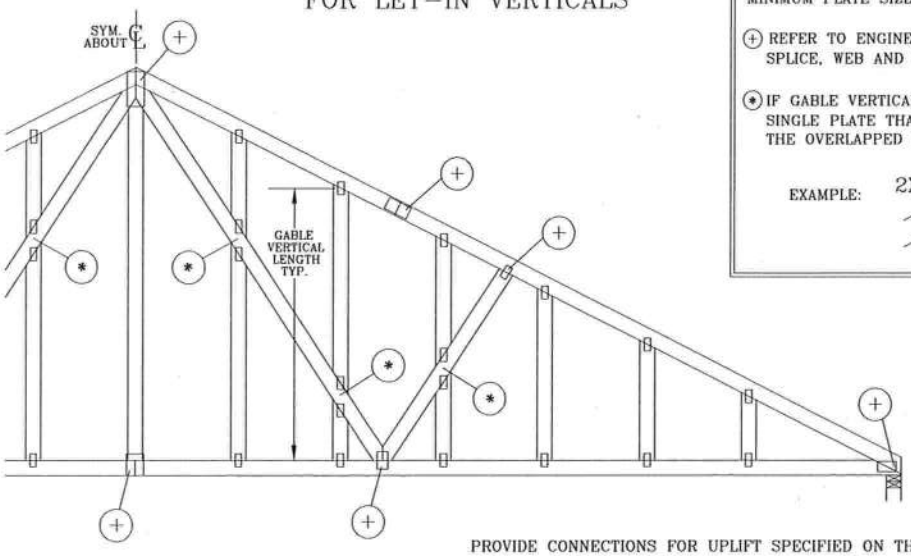

GABLE TRUSS PLATE SIZES

REFER TO APPROPRIATE ITW GABLE DETAIL FOR MINIMUM PLATE SIZES FOR VERTICAL STUDS.

(+) REFER TO ENGINEERED TRUSS DESIGN FOR PEAK, SPLICE, WEB AND HEEL PLATES.

(*) IF GABLE VERTICAL PLATES OVERLAP, USE A SINGLE PLATE THAT COVERS THE TOTAL AREA OF THE OVERLAPPED PLATES TO SPAN THE WEB.

EXAMPLE:

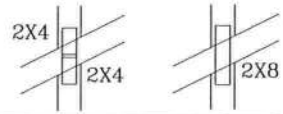

"T" REINFORCEMENT ATTACHMENT DETAIL

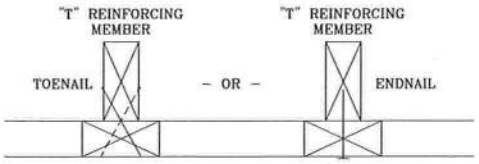

TO CONVERT FROM "L" TO "T" REINFORCING MEMBERS, MULTIPLY "T" INCREASE BY LENGTH (BASED ON APPROPRIATE ITW GABLE DETAIL).

MAXIMUM ALLOWABLE "T" REINFORCED GABLE VERTICAL LENGTH IS 14' FROM TOP TO BOTTOM CHORD.

WEB LENGTH INCREASE W/ "T" BRACE

WIND SPEED AND MRH	"T" REINF. MBR. SIZE	"T" INCREASE
140 MPH	2x4	10 %
15 FT	2x6	50 %
140 MPH	2x4	10 %
30 FT	2x6	50 %
130 MPH	2x4	10 %
15 FT	2x6	50 %
130 MPH	2x4	10 %
30 FT	2x6	50 %
120 MPH	2x4	10 %
15 FT	2x6	50 %
120 MPH	2x4	10 %
30 FT	2x6	40 %
110 MPH	2x4	10 %
15 FT	2x6	40 %
110 MPH	2x4	10 %
30 FT	2x6	50 %
100 MPH	2x4	20 %
15 FT	2x6	30 %
100 MPH	2x4	10 %
30 FT	2x6	40 %
90 MPH	2x4	20 %
15 FT	2x6	20 %
90 MPH	2x4	20 %
30 FT	2x6	30 %

EXAMPLE:
ASCE WIND SPEED = 100 MPH
MEAN ROOF HEIGHT = 30 FT, Kzt = 1.00
GABLE VERTICAL = 24" O.C. SP #3
"T" REINFORCING MEMBER SIZE = 2X4
"T" BRACE INCREASE (FROM ABOVE) = 10% = 1.10
(1) 2X4 "L" BRACE LENGTH = 6' 7"
MAXIMUM "T" REINFORCED GABLE VERTICAL LENGTH
1.10 x 6' 7" = 7' 3"

PROVIDE CONNECTIONS FOR UPLIFT SPECIFIED ON THE ENGINEERED TRUSS DESIGN.

ATTACH EACH "T" REINFORCING MEMBER WITH
END DRIVEN NAILS:
10d COMMON (0.148"X 3.",MIN) NAILS AT 4" O.C. PLUS
(4) NAILS IN TOP AND BOTTOM CHORD.

TOENAILED NAILS:
10d COMMON (0.148"x3",MIN) TOENAILS AT 4" O.C. PLUS
(4) TOENAILS IN TOP AND BOTTOM CHORD.

THIS DETAIL TO BE USED WITH THE APPROPRIATE ITW GABLE DETAIL FOR ASCE WIND LOAD.
ASCE 7-98 GABLE DETAIL DRAWINGS
A13015980109, A12015980109, A11015980109, A10015980109,
A13030980109, A12030980109, A11030980109, A10030980109
ASCE 7-02 GABLE DETAIL DRAWINGS
A13015020109, A12015020109, A11015020109, A10015020109, A14015020109,
A13030020109, A12030020109, A11030020109, A10030020109, A14030020109
ASCE 7-05 GABLE DETAIL DRAWINGS
A13015050109, A12015050109, A11015050109, A10015050109, A14015050109,
A13030050109, A12030050109, A11030050109, A10030050109, A14030050109

SEE APPROPRIATE ITW GABLE DETAIL FOR MAXIMUM UNREINFORCED GABLE VERTICAL LENGTH.

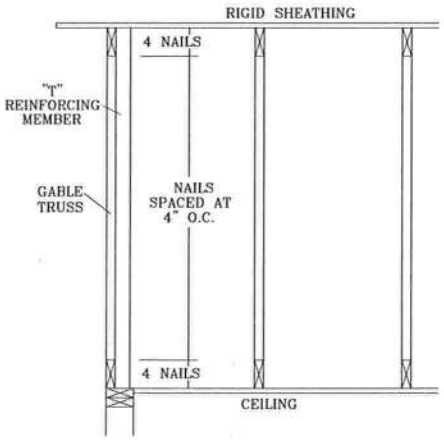

ITW Building Components Group Inc.
Earth City, MO 63045

WARNING READ AND FOLLOW ALL NOTES ON THIS SHEET!
Trusses require extreme care in fabricating, handling, shipping, installing and bracing. Refer to and follow BCSI (Building Component Safety Information, by TPI and WTCA) for safety practices prior to performing these functions. Installers shall provide temporary bracing per BCSI. Unless noted otherwise, top chord shall have properly attached structural panels and bottom chord shall have a properly attached rigid ceiling. Locations shown for permanent lateral restraint of webs shall have bracing installed per BCSI sections B3 & B7. See this job's general notes page for more information.

IMPORTANT FURNISH COPY OF THIS DESIGN TO INSTALLATION CONTRACTOR.
ITW Building Components Group Inc. (ITWBCG) shall not be responsible for any deviation from this design, any failure to build the truss in conformance with TPI, or fabricating, handling, shipping, installing & bracing of trusses. ITWBCG connector plates are made of 20/18/16GA (W,H/S/K) ASTM A653 grade 37/40/60 (K/W/H,S) galv. steel. Apply plates to each face of truss, positioned as shown above and on Joint Details. A seal on this drawing or cover page indicates acceptance and professional engineering responsibility solely for the truss component design shown. The suitability and use of this component for any building is the responsibility of the Building Designer per ANST/TPI 1 Sec. 2.
ITW-BCG: www.itwbcg.com; TPI: www.tpinst.com; WTCA: www.sbcindustry.com; ICC: www.iccsafe.org

DOUGLAS FLEMING LICENSE No. 66648 STATE OF FLORIDA PROFESSIONAL ENGINEER
DEC 18 '09

MAX TOT. LD. 60 PSF
DUR. FAC. ANY
MAX SPACING 24.0"

REF	LET-IN VERT
DATE	1/1/09
DRWG	GBLLETIN0109

Customer Watkins
Revision Permit# 28726

ITW Building Components Group, Inc.

1950 Marley Drive Haines City, FL 33844
Florida Engineering Certificate of Authorization Number: 0 278
Florida Certificate of Product Approval # FL1999
 Document ID:1U61487-Z0114101739

DOUGLAS FLEMING LICENSE No. 66648 STATE OF FLORIDA PROFESSIONAL ENGINEER
10/14/2010

Truss Fabricator:	Anderson Truss Company
Job Identification:	9-244--Fill in later EDGLEY -- , **
Truss Count:	77
Model Code:	Florida Building Code 2007 and 2009 Supplement
Truss Criteria:	FBC2007Res/TPI-2002(STD)
Engineering Software:	Alpine Software,Versions 9.02, 9.05.
Structural Engineer of Record:	The identity of the structural EOR did not exist as of
Address:	the seal date per section 61G15-31.003(5a) of the FAC
Minimum Design Loads:	Roof - 40.0 PSF @ 1.25 Duration
	Floor - N/A
	Wind - 110 MPH ASCE 7-05 -Closed

Notes:

1. Determination as to the suitability of these truss components for the structure is the responsibility of the building designer/engineer of record, as defined in ANSI/TPI 1
2. The drawing date shown on this index sheet must match the date shown on the individual truss component drawing.
3. As shown on attached drawings; the drawing number is preceded by: HCUSR487

Douglas M. Fleming
-Truss Design Engineer-

1950 Marley Drive
Haines City, FL 33844

Details: CNNAILSP-HIPFRAME-A1101505-GBLLETIN-

#	Ref Description	Drawing#	Date
1	03255--H7A	10287009	10/14/10
2	03256--H9A	10287002	10/14/10
3	03257--H11A	10287003	10/14/10
4	03258--H13A	10287004	10/14/10
5	03259--H15A	10287005	10/14/10
6	03260--H17A	10287006	10/14/10
7	03261--H19A	10287007	10/14/10
8	03262--A	10287010	10/14/10
9	03263--AG	10287008	10/14/10
10	03264--H7B	10287029	10/14/10
11	03265--H7B1	10287001	10/14/10
12	03266--H9B1	10287002	10/14/10
13	03267--H13B1	10287003	10/14/10
14	03268--H15B1	10287004	10/14/10
15	03269--B10	10287049	10/14/10
16	03270--B9	10287050	10/14/10
17	03271--H9B	10287042	10/14/10
18	03272--H11B	10287043	10/14/10
19	03273--BH1	10287059	10/14/10
20	03274--BH2	10287065	10/14/10
21	03275--BH3	10287041	10/14/10
22	03276--B1	10287066	10/14/10
23	03277--B2	10287062	10/14/10
24	03278--B3	10287061	10/14/10
25	03279--B4	10287064	10/14/10
26	03280--B5	10287063	10/14/10
27	03281--B6	10287053	10/14/10
28	03282--B7	10287058	10/14/10
29	03283--B8	10287052	10/14/10
30	03284--B3	10287068	10/14/10
31	03285--H11B1	10287005	10/14/10
32	03286--H7C	10287001	10/14/10
33	03287--C	10287011	10/14/10
34	03288--C1	10287055	10/14/10
35	03289--C2	10287057	10/14/10
36	03290--C3	10287056	10/14/10
37	03291--H7D	10287016	10/14/10
38	03292--HM7D	10287036	10/14/10

#	Ref Description	Drawing#	Date
39	03293--H9D	10287017	10/14/10
40	03294--D	10287018	10/14/10
41	03295--D5	10287033	10/14/10
42	03296--D4	10287013	10/14/10
43	03297--D3	10287035	10/14/10
44	03298--D2	10287034	10/14/10
45	03299--D1	10287040	10/14/10
46	03300--HM9D	10287038	10/14/10
47	03301--E	10287019	10/14/10
48	03302--EG2	10287025	10/14/10
49	03303--EG1	10287031	10/14/10
50	03304--HF2	10287020	10/14/10
51	03305--HF1	10287015	10/14/10
52	03306--HF1A	10287067	10/14/10
53	03307--HF3	10287039	10/14/10
54	03308--H7G	10287044	10/14/10
55	03309--H9G	10287046	10/14/10
56	03310--G	10287047	10/14/10
57	03311--EJ7	10287051	10/14/10
58	03312--EJ7A	10287028	10/14/10
59	03313--CJ5	10287030	10/14/10
60	03314--HJ7	10287022	10/14/10
61	03315--CJ3	10287037	10/14/10
62	03316--CJ1	10287045	10/14/10
63	03317--CJ5A	10287069	10/14/10
64	03318--HJ7A	10287006	10/14/10
65	03319--CJ3A	10287026	10/14/10
66	03320--CJ1A	10287027	10/14/10
67	03321--EJ7S	10287054	10/14/10
68	03322--EJ1.4	10287032	10/14/10
69	03323--HJ1.2	10287021	10/14/10
70	03324--EJ7H	10287048	10/14/10
71	03325--EJ7G1	10287007	10/14/10
72	03326--EJ7G	10287014	10/14/10
73	03327--KGE	10287008	10/14/10
74	03328--K	10287024	10/14/10
75	03329--K-1	10287023	10/14/10
76	03330--KG	10287012	10/14/10

#	Ref Description	Drawing#	Date
77	03331--H1.4L	10287060	10/14/10

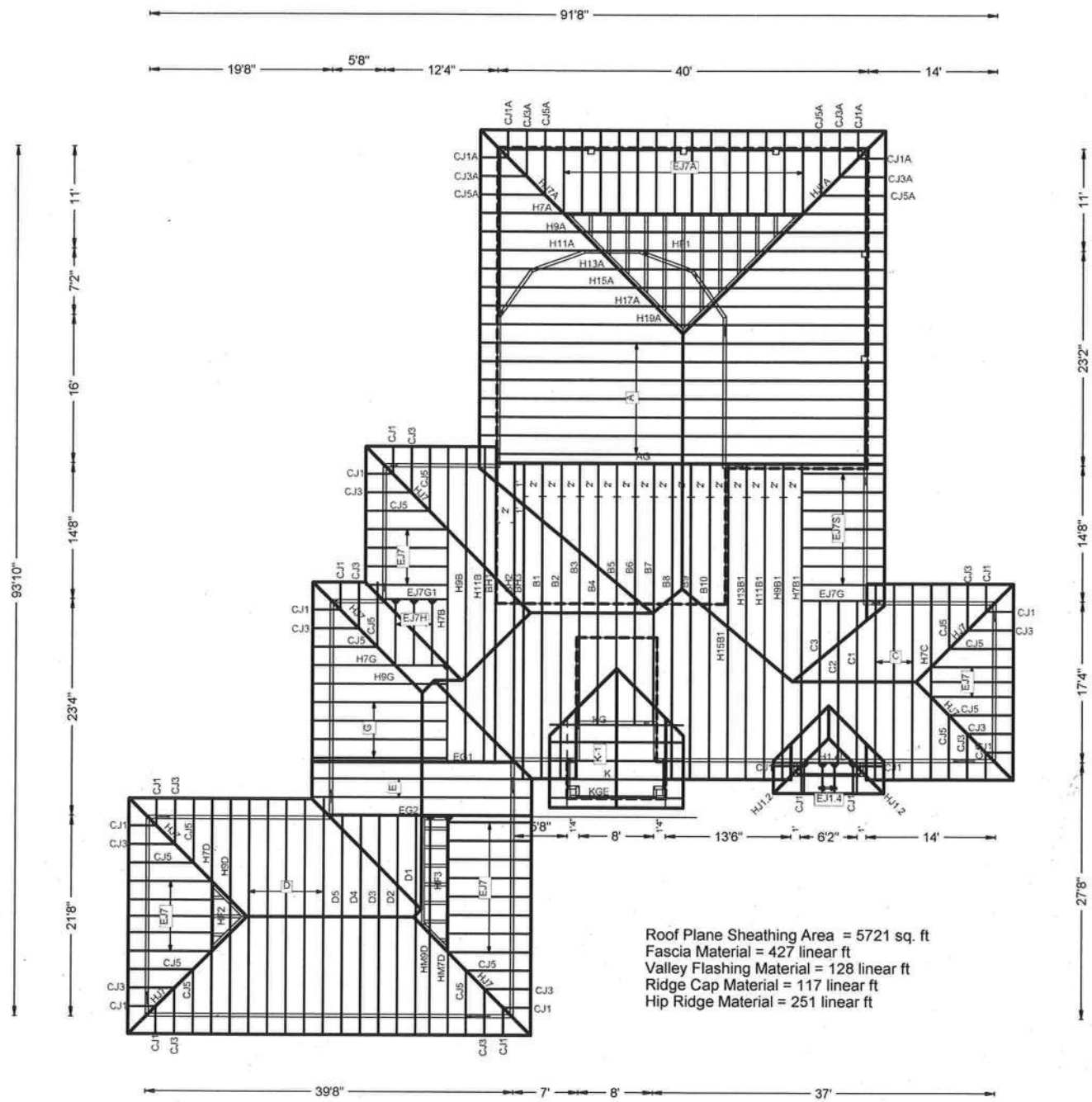

Roof Plane Sheathing Area = 5721 sq. ft
Fascia Material = 427 linear ft
Valley Flashing Material = 128 linear ft
Ridge Cap Material = 117 linear ft
Hip Ridge Material = 251 linear ft

EDGLEY CONSTRUCTION/WATKINS

JOB DESCRIPTION:: Fill in later
/: EDGLEY

JOB NO:
9-244

PAGE NO:
1 OF 1

(9-244--Fill in later EDGLEY -- , ** - H7A)

THIS DWG PREPARED FROM COMPUTER INPUT (LOADS & DIMENSIONS) SUBMITTED BY TRUSS MFR.

Top chord 2x4 SP #2 Dense :T2, T3 2x8 SP #1 Dense:
Bot chord 2x6 SP #1 Dense :B2 2x6 SP SS:
Webs 2x4 SP #3 :W3, W9 2x4 SP #2 Dense:

Roof overhang supports 2.00 psf soffit load.

Calculated horizontal deflection is 0.14" due to live load and 0.15" due to dead load.

(A) #3 or better scab brace. Same size & 80% length of web member. Attach with 10d Box or Gun (0.128"x3",min.)nails @ 6" OC.

#1 hip supports 7-0-0 jacks with no webs.

Deflection meets L/240 live and L/180 total load.

Calculated vertical deflection is 0.75" due to live load and 0.79" due to dead load at X = 20-0-0.

(I) - plates so marked were sized using a Fabrication Tolerance of 0% and a Rotational Tolerance of 0 degrees.

110 mph wind, 15.00 ft mean hgt, ASCE 7-05, CLOSED bldg, not located within 4.50 ft from roof edge, CAT II, EXP C, wind TC DL=5.0 psf, wind BC DL=5.0 psf. Iw=1.00 GCpi(+/-)=0.18

Wind reactions based on MWFRS pressures.

In lieu of structural panels use purlins to brace all flat TC @ 24" OC.

Left side jacks have 7-0-0 setback with 0-0-0 cant and 1-10-8 overhang. End jacks have 7-0-0 setback with 0-0-0 cant and 1-10-8 overhang. Right side jacks have 7-0-0 setback with 0-0-0 cant and 1-10-8 overhang.

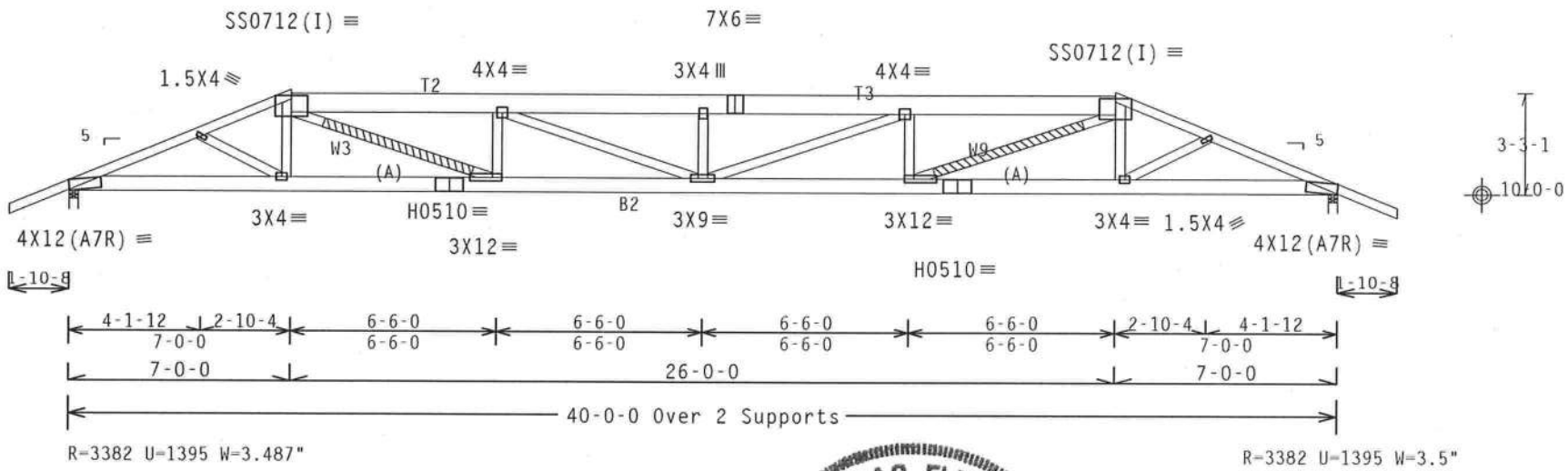

PLT TYP. 20 Gauge HS,18 Gauge HS, Wave Design Crit: FBC2007Res/TPI-2002(STD) FT/RT=20%(0%)/0(0) 9.02.03.0610.16 QTY 1 FL/-/4/-/-/R/- Scale =.1875"/Ft.

ALPINE
ITW Building Components Group Inc.
Haines City, FL 33844
FL COA #0 278

WARNING TRUSSES REQUIRE EXTREME CARE IN FABRICATION, HANDLING, SHIPPING, INSTALLING AND BRACING. REFER TO BCSI (BUILDING COMPONENT SAFETY INFORMATION), PUBLISHED BY TPI (TRUSS PLATE INSTITUTE, 218 NORTH LEE STREET, SUITE 312, ALEXANDRIA, VA. 22314) AND WTCA (WOOD TRUSS COUNCIL OF AMERICA, 6300 ENTERPRISE LANE, MADISON, WI 53719) FOR SAFETY PRACTICES PRIOR TO PERFORMING THESE FUNCTIONS. UNLESS OTHERWISE INDICATED TOP CHORD SHALL HAVE PROPERLY ATTACHED STRUCTURAL PANELS AND BOTTOM CHORD SHALL HAVE A PROPERLY ATTACHED RIGID CEILING.

IMPORTANTFURNISH A COPY OF THIS DESIGN TO THE INSTALLATION CONTRACTOR. ITW BCG, INC. SHALL NOT BE RESPONSIBLE FOR ANY DEVIATION FROM THIS DESIGN; ANY FAILURE TO BUILD THE TRUSS IN CONFORMANCE WITH TPI; OR FABRICATING, HANDLING, SHIPPING, INSTALLING & BRACING OF TRUSSES. DESIGN CONFORMS WITH APPLICABLE PROVISIONS OF NDS (NATIONAL DESIGN SPEC, BY AF&PA) AND TPI. ITW BCG CONNECTOR PLATES ARE MADE OF 20/18/16GA (H,H/SS/K) ASTM A653 GRADE 40/60 (H, K/H,SS) GALV. STEEL. APPLY PLATES TO EACH FACE OF TRUSS AND, UNLESS OTHERWISE LOCATED ON THIS DESIGN, POSITION PER DRAWINGS 1604. ANY INSPECTION OF PLATES FOLLOWED BY (I) SHALL BE PER ANNEX A3 OF TPI1-2002 SEC.3. A SEAL ON THIS DRAWING INDICATES ACCEPTANCE OF PROFESSIONAL ENGINEERING RESPONSIBILITY SOLELY FOR THE TRUSS COMPONENT DESIGN SHOWN. THE SUITABILITY AND USE OF THIS COMPONENT FOR ANY BUILDING IS THE RESPONSIBILITY OF THE BUILDING DESIGNER PER ANSI/TPI 1 SEC. 2.

DOUGLAS FLEMING LICENSE No. 66648 STATE OF FLORIDA PROFESSIONAL ENGINEER

10/14/2010

TC LL	20.0 PSF	REF	R487-- 3255
TC DL	10.0 PSF	DATE	10/14/10
BC DL	10.0 PSF	DRW	HCUSR487 10287009
BC LL	0.0 PSF	HC-ENG	KD/DF
TOT.LD.	40.0 PSF	SEQN-	77303
DUR.FAC.	1.25	FROM	AH
SPACING	24.0"	JREF-	1U61487_Z01

(9-244--Fill in later EDGLEY -- , ** - H9A)

THIS DWG PREPARED FROM COMPUTER INPUT (LOADS & DIMENSIONS) SUBMITTED BY TRUSS MFR.

Top chord 2x4 SP #2 Dense
Bot chord 2x4 SP #2 Dense
Webs 2x4 SP #3

Roof overhang supports 2.00 psf soffit load.

(A) 1x4 #3SRB SPF-S or better "T" brace. 80% length of web member. Attach with 8d Box or Gun (0.113"x2.5",min.)nails @ 6" OC.

Bottom chord checked for 10.00 psf non-concurrent live load.

MWFRS loads based on trusses located at least 7.50 ft. from roof edge.

110 mph wind, 15.00 ft mean hgt, ASCE 7-05, CLOSED bldg, not located within 4.50 ft from roof edge, CAT II, EXP C, wind TC DL=5.0 psf, wind BC DL=5.0 psf. Iw=1.00 GCpi(+/-)=0.18

Wind reactions based on MWFRS pressures.

In lieu of structural panels use purlins to brace all flat TC @ 24" OC.

Deflection meets L/240 live and L/180 total load.

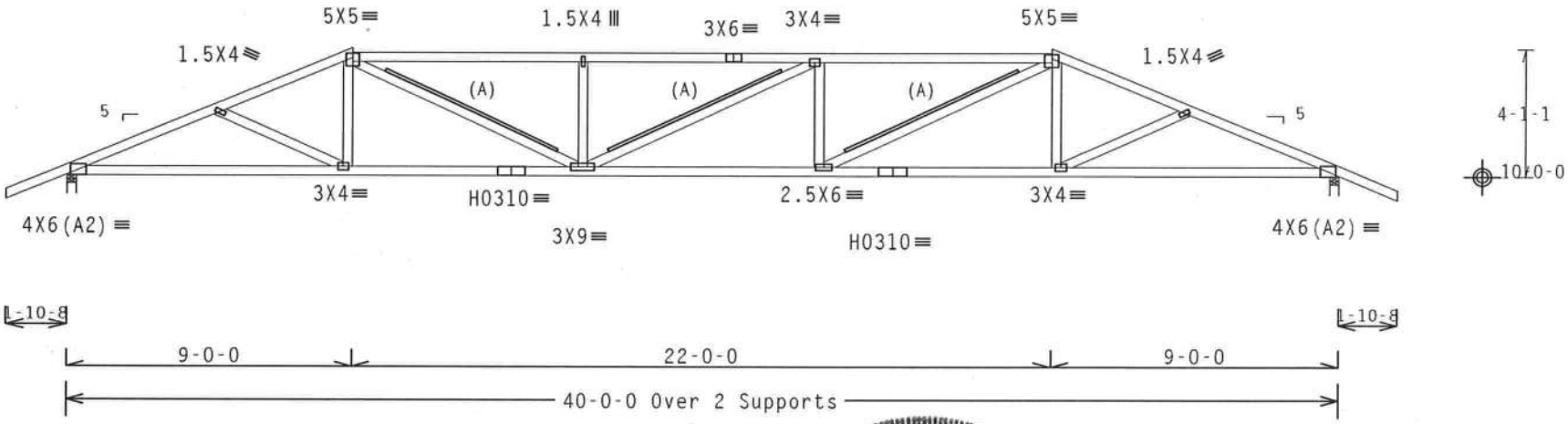

R=1757 U=478 W=3.489"
RL=157/-157

R=1757 U=478 W=3.5"

Design Crit: FBC2007Res/TPI-2002(STD)

PLT TYP. 20 Gauge HS,Wave FT/RT=20%(0%)/0(0) 9.02.03.0610.16 QTY: 1 FL/-/4/-/-/R/- Scale =.1875"/Ft.

ALPINE
ITW Building Components Group Inc.
Haines City, FL 33844
FL COA #0 278

WARNING TRUSSES REQUIRE EXTREME CARE IN FABRICATION, HANDLING, SHIPPING, INSTALLING AND BRACING. REFER TO BCSI (BUILDING COMPONENT SAFETY INFORMATION), PUBLISHED BY TPI (TRUSS PLATE INSTITUTE, 218 NORTH LEE STREET, SUITE 312, ALEXANDRIA, VA. 22314) AND WTCA (WOOD TRUSS COUNCIL OF AMERICA, 6300 ENTERPRISE LANE, MADISON, WI 53719) FOR SAFETY PRACTICES PRIOR TO PERFORMING THESE FUNCTIONS. UNLESS OTHERWISE INDICATED TOP CHORD SHALL HAVE PROPERLY ATTACHED STRUCTURAL PANELS AND BOTTOM CHORD SHALL HAVE A PROPERLY ATTACHED RIGID CEILING.

IMPORTANTFURNISH A COPY OF THIS DESIGN TO THE INSTALLATION CONTRACTOR. ITW BCG, INC. SHALL NOT BE RESPONSIBLE FOR ANY DEVIATION FROM THIS DESIGN; ANY FAILURE TO BUILD THE TRUSS IN CONFORMANCE WITH TPI; OR FABRICATING, HANDLING, SHIPPING, INSTALLING & BRACING OF TRUSSES. DESIGN CONFORMS WITH APPLICABLE PROVISIONS OF NDS (NATIONAL DESIGN SPEC, BY AF&PA) AND TPI. ITW BCG CONNECTOR PLATES ARE MADE OF 20/18/16GA (W,H/SS/R) ASTM A653 GRADE 40/60 (W, K/H,SS) GALV. STEEL. APPLY PLATES TO EACH FACE OF TRUSS AND, UNLESS OTHERWISE LOCATED ON THIS DESIGN, POSITION PER DRAWINGS 160A-2. ANY INSPECTION OF PLATES FOLLOWED BY (1) SHALL BE PER ANNEX A3 OF TPI1-2002 SEC.3. A SEAL ON THIS DRAWING INDICATES ACCEPTANCE OF PROFESSIONAL ENGINEERING RESPONSIBILITY SOLELY FOR THE TRUSS COMPONENT DESIGN SHOWN. THE SUITABILITY AND USE OF THIS COMPONENT FOR ANY BUILDING IS THE RESPONSIBILITY OF THE BUILDING DESIGNER PER ANSI/TPI 1 SEC. 2.

DOUGLAS FLEMING LICENSE No. 66648 STATE OF FLORIDA PROFESSIONAL ENGINEER
10/14/2010

TC LL	20.0 PSF	REF	R487-- 3256
TC DL	10.0 PSF	DATE	10/14/10
BC DL	10.0 PSF	DRW	HCUSR487 10287002
BC LL	0.0 PSF	HC-ENG	TCE/DF *
TOT.LD.	40.0 PSF	SEQN-	67599
DUR.FAC.	1.25	FROM	AH
SPACING	24.0"	JREF-	1U61487_Z01

(9-244--Fill in later EDGLEY -- , ** - H11A)

THIS DWG PREPARED FROM COMPUTER INPUT (LOADS & DIMENSIONS) SUBMITTED BY TRUSS MFR.

Top chord 2x4 SP #2 Dense
Bot chord 2x4 SP #2 Dense
Webs 2x4 SP #3

Roof overhang supports 2.00 psf soffit load.

In lieu of structural panels use purlins to brace all flat TC @ 24" OC.

Deflection meets L/240 live and L/180 total load.

110 mph wind, 15.00 ft mean hgt, ASCE 7-05, CLOSED bldg, not located within 4.50 ft from roof edge, CAT II, EXP C, wind TC DL=5.0 psf, wind BC DL=5.0 psf. Iw=1.00 GCpi(+/-)=0.18

Wind reactions based on MWFRS pressures.

Bottom chord checked for 10.00 psf non-concurrent live load.

MWFRS loads based on trusses located at least 7.50 ft. from roof edge.

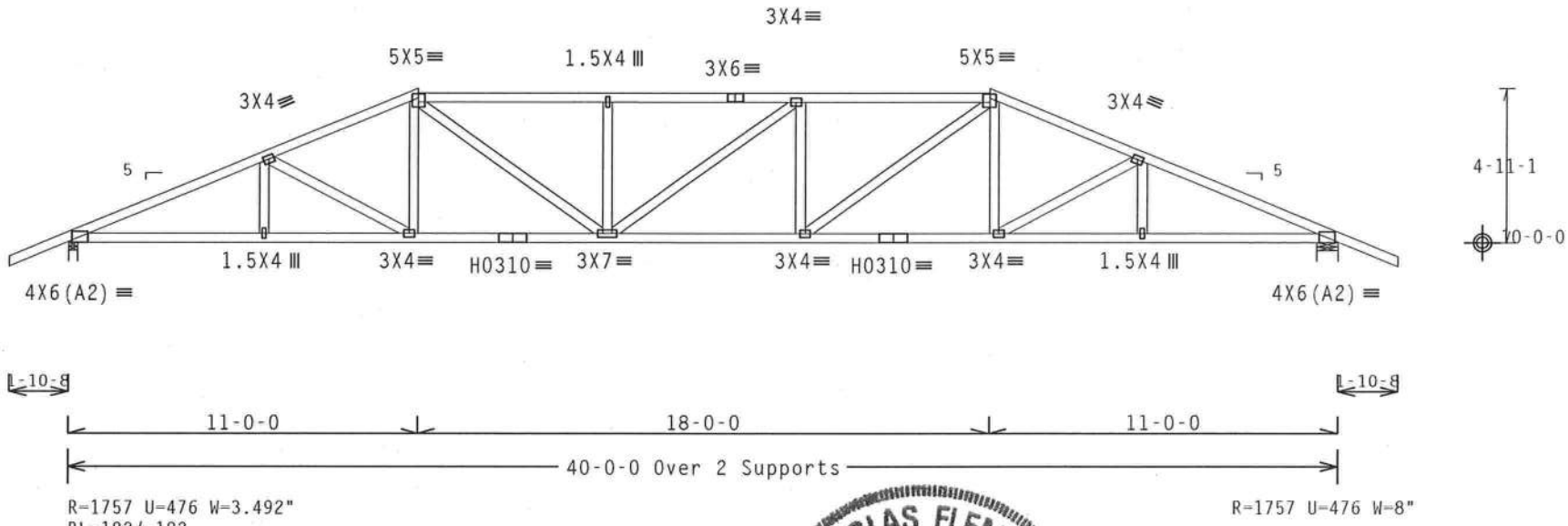

Design Crit: FBC2007Res/TPI-2002(STD)

PLT TYP. 20 Gauge HS,Wave FT/RT=20%(0%)/0(0) 09.02.03.0610.16 QTY:

FL/-/4/-/-/R/- Scale =.1875"/Ft.

ALPINE
ITW Building Components Group Inc.
Haines City, FL 33844
FL COA #0 278

WARNING TRUSSES REQUIRE EXTREME CARE IN FABRICATION, HANDLING, SHIPPING, INSTALLING AND BRACING. REFER TO BCSI (BUILDING COMPONENT SAFETY INFORMATION), PUBLISHED BY TPI (TRUSS PLATE INSTITUTE, 218 NORTH LEE STREET, SUITE 312, ALEXANDRIA, VA, 22314) AND WTCA (WOOD TRUSS COUNCIL OF AMERICA, 6300 ENTERPRISE LANE, MADISON, WI 53719) FOR SAFETY PRACTICES PRIOR TO PERFORMING THESE FUNCTIONS. UNLESS OTHERWISE INDICATED TOP CHORD SHALL HAVE PROPERLY ATTACHED STRUCTURAL PANELS AND BOTTOM CHORD SHALL HAVE A PROPERLY ATTACHED RIGID CEILING.

IMPORTANTFURNISH A COPY OF THIS DESIGN TO THE INSTALLATION CONTRACTOR. ITW BCG, INC. SHALL NOT BE RESPONSIBLE FOR ANY DEVIATION FROM THIS DESIGN; ANY FAILURE TO BUILD THE TRUSS IN CONFORMANCE WITH TPI; OR FABRICATING, HANDLING, SHIPPING, INSTALLING & BRACING OF TRUSSES. DESIGN CONFORMS WITH APPLICABLE PROVISIONS OF NDS (NATIONAL DESIGN SPEC, BY AF&PA) AND TPI. ITW BCG CONNECTOR PLATES ARE MADE OF 20/18/16GA (N,H/SS/K) ASTM A653 GRADE 40/60 (N, K/H,SS) GALV. STEEL. APPLICATION OF PLATES TO EACH FACE OF TRUSS AND, UNLESS OTHERWISE LOCATED ON THIS DESIGN, POSITION PER DRAWINGS 160A-2. ANY INSPECTION OF PLATES FOLLOWED BY (1) SHALL BE PER ANNEX A3 OF TPI1-2002 SEC.3. A SEAL ON THIS DRAWING INDICATES ACCEPTANCE OF PROFESSIONAL ENGINEERING RESPONSIBILITY SOLELY FOR THE TRUSS COMPONENT DESIGN SHOWN. THE SUITABILITY AND USE OF THIS COMPONENT FOR ANY BUILDING IS THE RESPONSIBILITY OF THE BUILDING DESIGNER PER ANSI/TPI 1 SEC. 2.

DOUGLAS FLEMING LICENSE No. 66648 STATE OF FLORIDA PROFESSIONAL ENGINEER
10/14/2010

TC LL	20.0 PSF	REF	R487-- 3257
TC DL	10.0 PSF	DATE	10/14/10
BC DL	10.0 PSF	DRW	HCUSR487 10287003
BC LL	0.0 PSF	HC-ENG	TCE/DF *
TOT.LD.	40.0 PSF	SEQN-	67605
DUR.FAC.	1.25	FROM	AH
SPACING	24.0"	JREF-	1U61487_Z01

(9-244--Fill in later EDGLEY -- , ** - H13A)

THIS DWG PREPARED FROM COMPUTER INPUT (LOADS & DIMENSIONS) SUBMITTED BY TRUSS MFR.

Top chord 2x4 SP #2 Dense
Bot chord 2x4 SP #2 Dense
Webs 2x4 SP #3

Roof overhang supports 2.00 psf soffit load.

(A) 1x4 #3SRB SPF-S or better "T" brace. 80% length of web member. Attach with 8d Box or Gun (0.113"x2.5",min.)nails @ 6" OC.

Bottom chord checked for 10.00 psf non-concurrent live load.

MWFRS loads based on trusses located at least 7.50 ft. from roof edge.

110 mph wind, 15.00 ft mean hgt, ASCE 7-05, CLOSED bldg, not located within 4.50 ft from roof edge, CAT II, EXP C, wind TC DL=5.0 psf, wind BC DL=5.0 psf. Iw=1.00 GCpi(+/-)=0.18

Wind reactions based on MWFRS pressures.

In lieu of structural panels use purlins to brace all flat TC @ 24" OC.

Deflection meets L/240 live and L/180 total load.

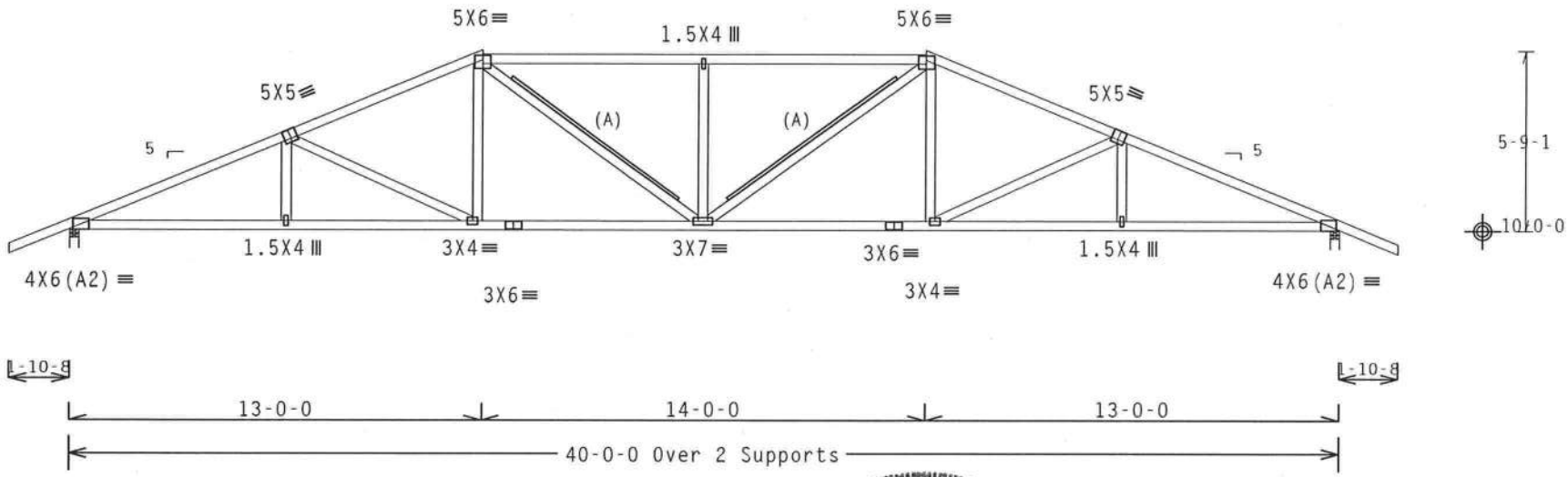

Design Crit: FBC2007Res/TPI-2002(STD)

PLT TYP. Wave FT/RT=20%(0%)/0(0) 09.02.03.0610.16 QTY: FL/-/4/-/-/R/- Scale =.1875"/Ft.

ALPINE
ITW Building Components Group Inc.
Haines City, FL 33844
FL COA #0 278

WARNING TRUSSES REQUIRE EXTREME CARE IN FABRICATION, HANDLING, SHIPPING, INSTALLING AND BRACING. REFER TO BCSI (BUILDING COMPONENT SAFETY INFORMATION), PUBLISHED BY TPI (TRUSS PLATE INSTITUTE, 218 NORTH LEE STREET, SUITE 312, ALEXANDRIA, VA, 22314) AND WTCA (WOOD TRUSS COUNCIL OF AMERICA, 6300 ENTERPRISE LANE, MADISON, WI 53719) FOR SAFETY PRACTICES PRIOR TO PERFORMING THESE FUNCTIONS. UNLESS OTHERWISE INDICATED TOP CHORD SHALL HAVE PROPERLY ATTACHED STRUCTURAL PANELS AND BOTTOM CHORD SHALL HAVE A PROPERLY ATTACHED RIGID CEILING.

IMPORTANTFURNISH A COPY OF THIS DESIGN TO THE INSTALLATION CONTRACTOR. ITW BCG, INC. SHALL NOT BE RESPONSIBLE FOR ANY DEVIATION FROM THIS DESIGN; ANY FAILURE TO BUILD THE TRUSS IN CONFORMANCE WITH TPI1; OR FABRICATING, HANDLING, SHIPPING, INSTALLING & BRACING OF TRUSSES.
DESIGN CONFORMS WITH APPLICABLE PROVISIONS OF NDS (NATIONAL DESIGN SPEC, BY AF&PA) AND TPI. ITW BCG CONNECTOR PLATES ARE MADE OF 20/18/16GA (W,H/SS/K) ASTM A653 GRADE 40/60 (W, K/H,SS) GALV. STEEL. APPLY PLATES TO EACH FACE OF TRUSS AND, UNLESS OTHERWISE LOCATED ON THIS DESIGN, POSITION PER DRAWINGS 160A-2. ANY INSPECTION OF PLATES FOLLOWED BY (1) SHALL BE PER ANNEX A3 OF TPI1-2002 SEC.3. A SEAL ON THIS DRAWING INDICATES ACCEPTANCE OF PROFESSIONAL ENGINEERING RESPONSIBILITY SOLELY FOR THE TRUSS COMPONENT DESIGN SHOWN. THE SUITABILITY AND USE OF THIS COMPONENT FOR ANY BUILDING IS THE RESPONSIBILITY OF THE BUILDING DESIGNER PER ANSI/TPI 1 SEC. 2.

DOUGLAS FLEMING LICENSE No. 66648 STATE OF FLORIDA PROFESSIONAL ENGINEER
10/14/2010

TC LL	20.0 PSF	REF	R487-- 3258
TC DL	10.0 PSF	DATE	10/14/10
BC DL	10.0 PSF	DRW	HCUSR487 10287004
BC LL	0.0 PSF	HC-ENG	TCE/DF *
TOT.LD.	40.0 PSF	SEQN-	67614
DUR.FAC.	1.25	FROM	AH
SPACING	24.0"	JREF-	1U61487_Z01

(9-244--Fill in later EDGLEY -- , ** - H15A)

Top chord 2x4 SP #2 Dense
Bot chord 2x4 SP #2 Dense
Webs 2x4 SP #3

Roof overhang supports 2.00 psf soffit load.

In lieu of structural panels use purlins to brace all flat TC @ 24" OC.

Bottom chord checked for 10.00 psf non-concurrent live load.

MWFRS loads based on trusses located at least 15.00 ft. from roof edge.

110 mph wind, 15.00 ft mean hgt, ASCE 7-05, CLOSED bldg, not located within 4.50 ft from roof edge, CAT II, EXP C, wind TC DL=5.0 psf, wind BC DL=5.0 psf. Iw=1.00 GCpi(+/-)=0.18

Wind reactions based on MWFRS pressures.

Truss passed check for 20 psf additional bottom chord live load in areas with 42"-high x 24"-wide clearance.

Deflection meets L/240 live and L/180 total load.

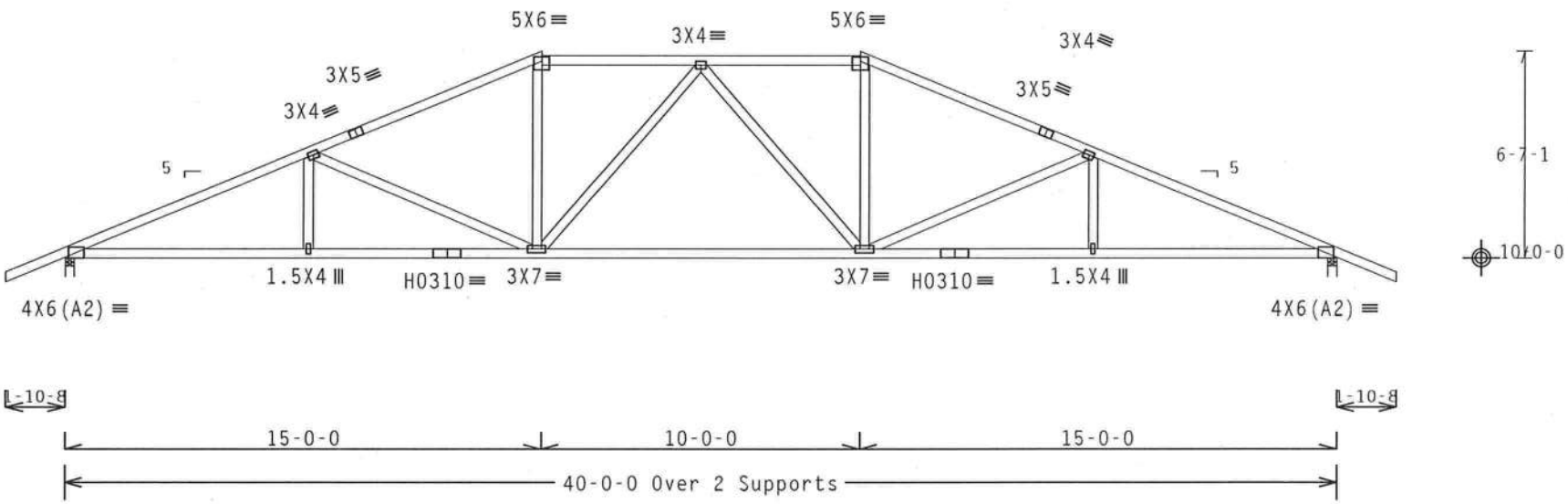

Design Crit: FBC2007Res/TPI-2002(STD)

PLT TYP. 20 Gauge HS,Wave | FT/RT=20%(0%)/0(0) | 9.02.03.0610.16 | QTY 1 | FL/-/4/-/-/R/- | Scale =.1875"/Ft.

ALPINE
ITW Building Components Group Inc.
Haines City, FL 33844
FL COA #0 278

WARNING TRUSSES REQUIRE EXTREME CARE IN FABRICATION, HANDLING, SHIPPING, INSTALLING AND BRACING. REFER TO BCSI (BUILDING COMPONENT SAFETY INFORMATION), PUBLISHED BY TPI (TRUSS PLATE INSTITUTE, 218 NORTH LEE STREET, SUITE 312, ALEXANDRIA, VA, 22314) AND WTCA (WOOD TRUSS COUNCIL OF AMERICA, 6300 ENTERPRISE LANE, MADISON, WI 53719) FOR SAFETY PRACTICES PRIOR TO PERFORMING THESE FUNCTIONS. UNLESS OTHERWISE INDICATED TOP CHORD SHALL HAVE PROPERLY ATTACHED STRUCTURAL PANELS AND BOTTOM CHORD SHALL HAVE A PROPERLY ATTACHED RIGID CEILING.

IMPORTANTFURNISH A COPY OF THIS DESIGN TO THE INSTALLATION CONTRACTOR. ITW BCG, INC. SHALL BE RESPONSIBLE FOR ANY DEVIATION FROM THIS DESIGN; ANY FAILURE TO BUILD THE TRUSS IN CONFORMANCE WITH TPI; OR FABRICATING, HANDLING, SHIPPING, INSTALLING & BRACING OF TRUSSES. DESIGN CONFORMS WITH APPLICABLE PROVISIONS OF NDS (NATIONAL DESIGN SPEC, BY AF&PA) AND TPI. ITW BCG CONNECTOR PLATES ARE MADE OF 20/18/16GA (W,H/SS/K) ASTM A653 GRADE 40/60 (W, K/H,SS) GALV. STEEL. APPLICATION OF PLATES TO EACH FACE OF TRUSS AND, UNLESS OTHERWISE LOCATED ON THIS DESIGN, POSITION PER DRAWINGS 160A. ANY INSPECTION OF PLATES FOLLOWED BY (1) SHALL BE PER ANNEX A3 OF TPI1-2002 SEC.3. A SEAL ON THIS DRAWING INDICATES ACCEPTANCE OF PROFESSIONAL ENGINEERING RESPONSIBILITY SOLELY FOR THE TRUSS COMPONENT DESIGN SHOWN. THE SUITABILITY AND USE OF THIS COMPONENT FOR ANY BUILDING IS THE RESPONSIBILITY OF THE BUILDING DESIGNER PER ANSI/TPI 1 SEC. 2.

DOUGLAS FLEMING LICENSE No. 66648 STATE OF FLORIDA PROFESSIONAL ENGINEER
10/14/2010

TC LL	20.0 PSF	REF	R487-- 3259
TC DL	10.0 PSF	DATE	10/14/10
BC DL	10.0 PSF	DRW	HCUSR487 10287005
BC LL	0.0 PSF	HC-ENG	TCE/DF *
TOT.LD.	40.0 PSF	SEQN-	67622
DUR.FAC.	1.25		
SPACING	24.0"	JREF-	1U61487_Z01

(9-244--Fill in later EDGLEY -- , ** - H17A)

THIS DWG PREPARED FROM COMPUTER INPUT (LOADS & DIMENSIONS) SUBMITTED BY TRUSS MFR.

Top chord 2x4 SP #2 Dense
Bot chord 2x4 SP #2 Dense
Webs 2x4 SP #3

Roof overhang supports 2.00 psf soffit load.

(A) 1x4 #3SRB SPF-S or better "T" brace. 80% length of web member. Attach with 8d Box or Gun (0.113"x2.5",min.)nails @ 6" OC.

Truss passed check for 20 psf additional bottom chord live load in areas with 42"-high x 24"-wide clearance.

MWFRS loads based on trusses located at least 15.00 ft. from roof edge.

110 mph wind, 15.00 ft mean hgt, ASCE 7-05, CLOSED bldg, not located within 4.50 ft from roof edge, CAT II, EXP C, wind TC DL=5.0 psf, wind BC DL=5.0 psf. Iw=1.00 GCpi(+/-)=0.18

Wind reactions based on MWFRS pressures.

In lieu of structural panels use purlins to brace all flat TC @ 24" OC.

Bottom chord checked for 10.00 psf non-concurrent live load.

Deflection meets L/240 live and L/180 total load.

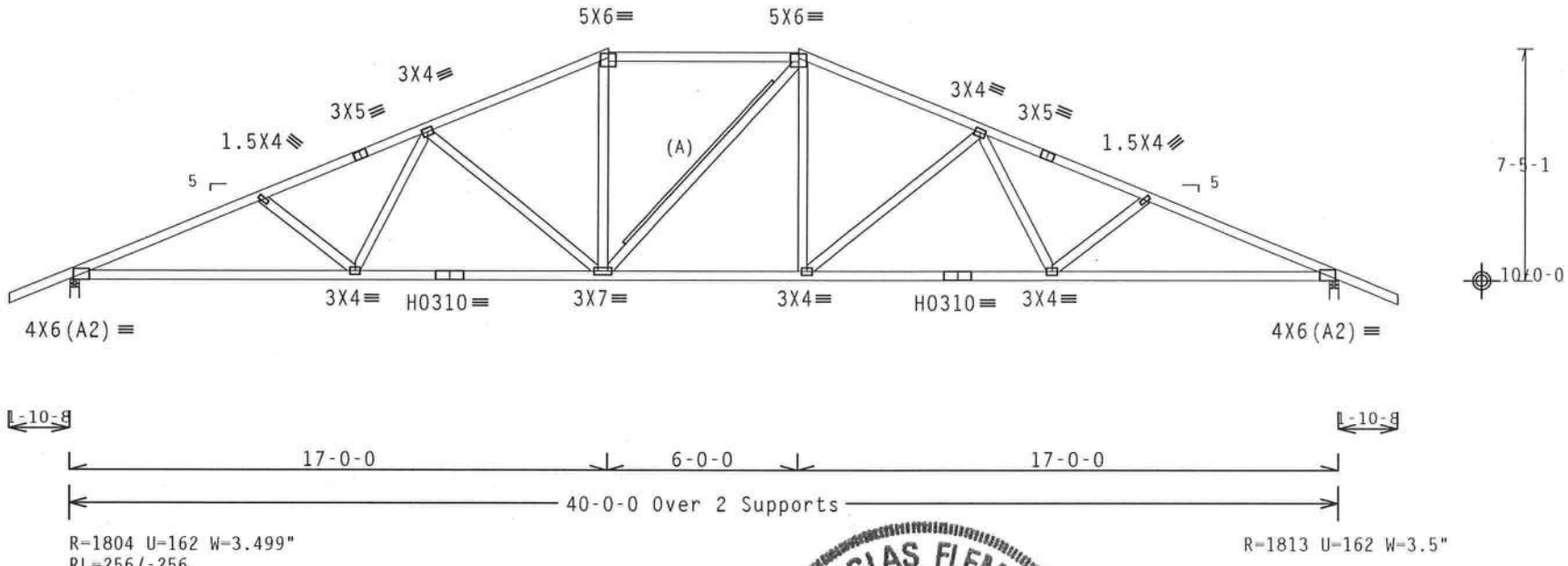

Design Crit: FBC2007Res/TPI-2002(STD)

PLT TYP. 20 Gauge HS,Wave FT/RT=20%(0%)/0(0) 9.02.03.0610.16 QTY: FL/-/4/-/-/R/- Scale =.1875"/Ft.

ALPINE
ITW Building Components Group Inc.
Haines City, FL 33844
FL COA #0 278

WARNING TRUSSES REQUIRE EXTREME CARE IN FABRICATION, HANDLING, SHIPPING, INSTALLING AND BRACING. REFER TO BCSI (BUILDING COMPONENT SAFETY INFORMATION), PUBLISHED BY TPI (TRUSS PLATE INSTITUTE, 218 NORTH LEE STREET, SUITE 312, ALEXANDRIA, VA, 22314) AND WTCA (WOOD TRUSS COUNCIL OF AMERICA, 6300 ENTERPRISE LANE, MADISON, WI 53719) FOR SAFETY PRACTICES PRIOR TO PERFORMING THESE FUNCTIONS. UNLESS OTHERWISE INDICATED TOP CHORD SHALL HAVE PROPERLY ATTACHED STRUCTURAL PANELS AND BOTTOM CHORD SHALL HAVE A PROPERLY ATTACHED RIGID CEILING.

IMPORTANTFURNISH A COPY OF THIS DESIGN TO THE INSTALLATION CONTRACTOR. ITW BCG, INC. SHALL NOT BE RESPONSIBLE FOR ANY DEVIATION FROM THIS DESIGN; ANY FAILURE TO BUILD THE TRUSS IN CONFORMANCE WITH TPI; OR FABRICATING, HANDLING, SHIPPING, INSTALLING & BRACING OF TRUSSES. DESIGN CONFORMS WITH APPLICABLE PROVISIONS OF NDS (NATIONAL DESIGN SPEC. BY AF&PA) AND TPI. ITW BCG CONNECTOR PLATES ARE MADE OF 20/18/16GA (W,H/SS/H) ASTM A653 GRADE 40/60 (W, H/H,SS) GALV. STEEL. APPLY PLATES TO EACH FACE OF TRUSS AND, UNLESS OTHERWISE LOCATED ON THIS DESIGN, POSITION PER DRAWINGS 160A-2. ANY INSPECTION OF PLATES FOLLOWED BY (1) SHALL BE PER ANNEX A3 OF TPI1-2002 SEC.3. A SEAL ON THIS DRAWING INDICATES ACCEPTANCE OF PROFESSIONAL ENGINEERING RESPONSIBILITY SOLELY FOR THE TRUSS COMPONENT DESIGN SHOWN. THE SUITABILITY AND USE OF THIS COMPONENT FOR ANY BUILDING IS THE RESPONSIBILITY OF THE BUILDING DESIGNER PER ANSI/TPI 1 SEC. 2.

DOUGLAS FLEMING LICENSE No. 66648 STATE OF FLORIDA PROFESSIONAL ENGINEER
10/14/2010

TC LL	20.0 PSF	REF	R487-- 3260
TC DL	10.0 PSF	DATE	10/14/10
BC DL	10.0 PSF	DRW	HCUSR487 10287006
BC LL	0.0 PSF	HC-ENG	TCE/DF *
TOT.LD.	40.0 PSF	SEQN-	67631
DUR.FAC.	1.25		
SPACING	24.0"	JREF-	1U61487_Z01

(9-244--Fill in later EDGLEY -- , ** - H19A)

Top chord 2x4 SP #2 Dense
Bot chord 2x4 SP #2 Dense
Webs 2x4 SP #3

Roof overhang supports 2.00 psf soffit load.

In lieu of structural panels use purlins to brace all flat TC @ 24" OC.

Bottom chord checked for 10.00 psf non-concurrent live load.

MWFRS loads based on trusses located at least 15.00 ft. from roof edge.

110 mph wind, 15.00 ft mean hgt, ASCE 7-05, CLOSED bldg, not located within 4.50 ft from roof edge, CAT II, EXP C, wind TC DL=5.0 psf, wind BC DL=5.0 psf. Iw=1.00 GCpi(+/-)=0.18

Wind reactions based on MWFRS pressures.

Truss passed check for 20 psf additional bottom chord live load in areas with 42"-high x 24"-wide clearance.

Deflection meets L/240 live and L/180 total load.

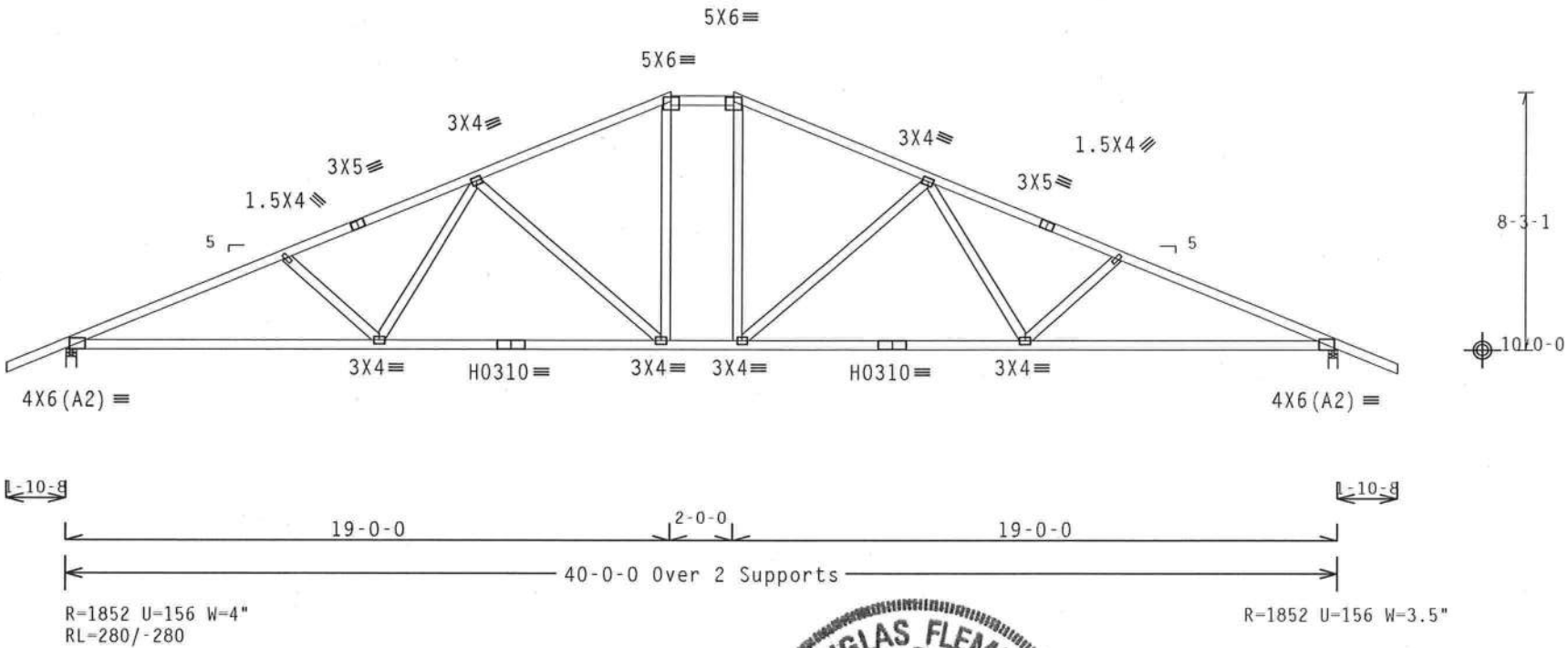

Design Crit: FBC2007Res/TPI-2002(STD)

PLT TYP. 20 Gauge HS,Wave | FT/RT=20%(0%)/0(0) | 9.02.03.0610.16 | QTY 1 | FL/-/4/-/-/R/- | Scale =.1875"/Ft.

ALPINE
ITW Building Components Group Inc.
Haines City, FL 33844
FL COA #0 278

WARNING TRUSSES REQUIRE EXTREME CARE IN FABRICATION, HANDLING, SHIPPING, INSTALLING AND BRACING. REFER TO BCSI (BUILDING COMPONENT SAFETY INFORMATION), PUBLISHED BY TPI (TRUSS PLATE INSTITUTE, 218 NORTH LEE STREET, SUITE 312, ALEXANDRIA, VA, 22314) AND WTCA (WOOD TRUSS COUNCIL OF AMERICA, 6300 ENTERPRISE LANE, MADISON, WI 53719) FOR SAFETY PRACTICES PRIOR TO PERFORMING THESE FUNCTIONS. UNLESS OTHERWISE INDICATED TOP CHORD SHALL HAVE PROPERLY ATTACHED STRUCTURAL PANELS AND BOTTOM CHORD SHALL HAVE A PROPERLY ATTACHED RIGID CEILING.

IMPORTANTFURNISH A COPY OF THIS DESIGN TO THE INSTALLATION CONTRACTOR. ITW BCG, INC. SHALL NOT BE RESPONSIBLE FOR ANY DEVIATION FROM THIS DESIGN; ANY FAILURE TO BUILD THE TRUSS IN CONFORMANCE WITH TPI; OR FABRICATING, HANDLING, SHIPPING, INSTALLING & BRACING OF TRUSSES. DESIGN CONFORMS WITH APPLICABLE PROVISIONS OF NDS (NATIONAL DESIGN SPEC. BY AF&PA) AND TPI. ITW BCG CONNECTOR PLATES ARE MADE OF 20/18/16GA (N,H/SS/K) ASTM A653 GRADE 40/60 (N, K/H,SS) GALV. STEEL. APPLY PLATES TO EACH FACE OF TRUSS AND, UNLESS OTHERWISE LOCATED ON THIS DESIGN, POSITION PER DRAWINGS 160A. ANY INSPECTION OF PLATES FOLLOWED BY (1) SHALL BE PER ANNEX A3 OF TPI1-2002 SEC.3. A SEAL ON THIS DRAWING INDICATES ACCEPTANCE OF PROFESSIONAL ENGINEERING RESPONSIBILITY SOLELY FOR THE TRUSS COMPONENT DESIGN SHOWN. THE SUITABILITY AND USE OF THIS COMPONENT FOR ANY BUILDING IS THE RESPONSIBILITY OF THE BUILDING DESIGNER PER ANSI/TPI 1 SEC. 2.

DOUGLAS FLEMING LICENSE No. 66648 STATE OF FLORIDA PROFESSIONAL ENGINEER

10/14/2010

TC LL	20.0 PSF	REF	R487-- 3261
TC DL	10.0 PSF	DATE	10/14/10
BC DL	10.0 PSF	DRW	HCUSR487 10287007
BC LL	0.0 PSF	HC-ENG	TCE/DF *
TOT.LD.	40.0 PSF	SEQN-	67636
DUR.FAC.	1.25		
SPACING	24.0"	JREF-	1U61487_Z01

(9-244--Fill in later EDGLEY -- , ** - A)

Top chord 2x4 SP #2 Dense
Bot chord 2x4 SP #2 Dense
Webs 2x4 SP #3

Roof overhang supports 2.00 psf soffit load.

(A) 1x4 #3SRB SPF-S or better "T" brace. 80% length of web member. Attach with 8d Box or Gun (0.113"x2.5",min.)nails @ 6" OC.

Bottom chord checked for 10.00 psf non-concurrent live load.

MWFRS loads based on trusses located at least 15.00 ft. from roof edge.

110 mph wind, 15.00 ft mean hgt, ASCE 7-05, CLOSED bldg, not located within 4.50 ft from roof edge, CAT II, EXP C, wind TC DL=5.0 psf, wind BC DL=5.0 psf. Iw=1.00 GCpi(+/-)=0.18

Wind reactions based on MWFRS pressures.

Truss passed check for 20 psf additional bottom chord live load in areas with 42"-high x 24"-wide clearance.

Deflection meets L/240 live and L/180 total load.

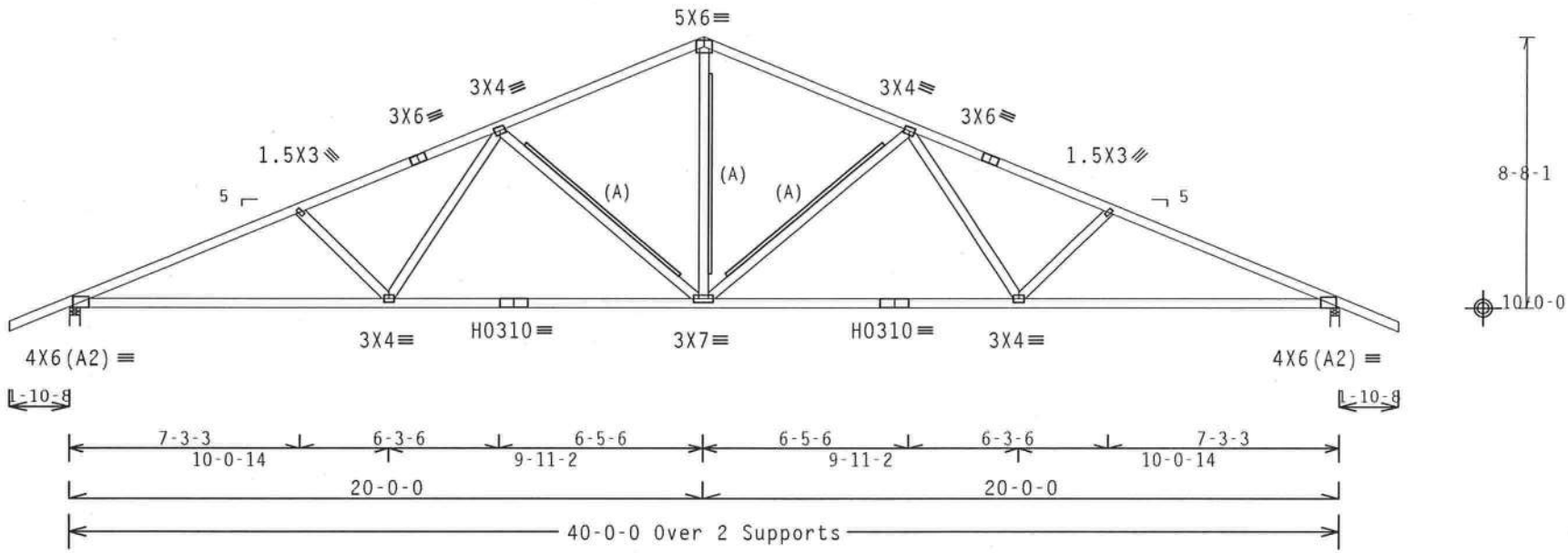

Design Crit: FBC2007Res/TPI-2002(STD)

PLT TYP. 20 Gauge HS,Wave | FT/RT=20%(0%)/0(0) | 9.05.03.0319.17 | QTY 7 | FL/-/4/-/-/R/- | Scale =.1875"/Ft.

ALPINE
ITW Building Components Group Inc.
Haines City, FL 33844
FL COA #0 278

WARNING TRUSSES REQUIRE EXTREME CARE IN FABRICATION, HANDLING, SHIPPING, INSTALLING AND BRACING. REFER TO BCSI (BUILDING COMPONENT SAFETY INFORMATION), PUBLISHED BY TPI (TRUSS PLATE INSTITUTE, 218 NORTH LEE STREET, SUITE 312, ALEXANDRIA, VA, 22314) AND WTCA (WOOD TRUSS COUNCIL OF AMERICA, 6300 ENTERPRISE LANE, MADISON, WI 53719) FOR SAFETY PRACTICES PRIOR TO PERFORMING THESE FUNCTIONS. UNLESS OTHERWISE INDICATED TOP CHORD SHALL HAVE PROPERLY ATTACHED STRUCTURAL PANELS AND BOTTOM CHORD SHALL HAVE A PROPERLY ATTACHED RIGID CEILING.

IMPORTANTFURNISH A COPY OF THIS DESIGN TO THE INSTALLATION CONTRACTOR. ITW BCG, INC. SHALL BE RESPONSIBLE FOR ANY DEVIATION FROM THIS DESIGN; ANY FAILURE TO BUILD THE TRUSS IN CONFORMANCE WITH TPI; OR FABRICATING, HANDLING, SHIPPING, INSTALLING & BRACING OF TRUSSES. DESIGN CONFORMS WITH APPLICABLE PROVISIONS OF NDS (NATIONAL DESIGN SPEC. BY AF&PA) AND TPI. ITW BCG CONNECTOR PLATES ARE MADE OF 20/18/16GA (H,H/SS/K) ASTM A653 GRADE 40/60 (H, K/H,SS) GALV. STEEL. APPLY PLATES TO EACH FACE OF TRUSS AND, UNLESS OTHERWISE LOCATED ON THIS DESIGN, POSITION PER DRAWINGS 160A. ANY INSPECTION OF PLATES FOLLOWED BY (1) SHALL BE PER ANNEX A3 OF TPI1-2002 SEC.3. A SEAL ON THIS DRAWING INDICATES ACCEPTANCE OF PROFESSIONAL ENGINEERING RESPONSIBILITY SOLELY FOR THE TRUSS COMPONENT DESIGN SHOWN. THE SUITABILITY AND USE OF THIS COMPONENT FOR ANY BUILDING IS THE RESPONSIBILITY OF THE BUILDING DESIGNER PER ANSI/TPI 1 SEC. 2.

DOUGLAS FLEMING LICENSE No. 66648 STATE OF FLORIDA PROFESSIONAL ENGINEER
10/14/2010

TC LL	20.0 PSF	REF	R487-- 3262
TC DL	10.0 PSF	DATE	10/14/10
BC DL	10.0 PSF	DRW	HCUSR487 10287010
BC LL	0.0 PSF	HC-ENG	KD/DF *
TOT.LD.	40.0 PSF	SEQN-	151129
DUR.FAC.	1.25		
SPACING	24.0"	JREF-	1U61487_Z01

(9-244--Fill in later EDGLEY -- , ** - AG)

THIS DWG PREPARED FROM COMPUTER INPUT (LOADS & DIMENSIONS) SUBMITTED BY TRUSS MFR.

Top chord 2x4 SP #2 Dense
Bot chord 2x8 SP SS :B3 2x8 SP #1 Dense:
Webs 2x4 SP #3 :W5, W6, W8, W9 2x4 SP #2 Dense:
:Lt Wedge 2x4 SP #3:

Special loads
------(Lumber Dur.Fac.=1.25 / Plate Dur.Fac.=1.25)
TC- From 62 plf at 0.00 to 62 plf at 20.00
TC- From 62 plf at 20.00 to 62 plf at 41.87
BC- From 20 plf at 0.00 to 20 plf at 40.00
BC- From 4 plf at 40.00 to 4 plf at 41.87
BC- 1311.74 lb Conc. Load at 1.94
BC- 1307.48 lb Conc. Load at 2.94, 4.94, 6.94
BC- 1139.15 lb Conc. Load at 8.94
BC- 1153.05 lb Conc. Load at 10.94,12.94
BC- 1282.56 lb Conc. Load at 14.94
BC- 1329.07 lb Conc. Load at 16.94
BC- 1517.91 lb Conc. Load at 18.94
BC- 1523.09 lb Conc. Load at 20.94
BC- 1485.56 lb Conc. Load at 22.94

Wind reactions based on MWFRS pressures.

(A) #3 or better scab brace. Same size & 80% length of web member. Attach with 10d Box or Gun (0.128"x3",min.)nails @ 6" OC.

2 COMPLETE TRUSSES REQUIRED

Nail Schedule:0.131"x3" nails
Top Chord: 1 Row @12.00" o.c.
Bot Chord: 1 Row @ 4.00" o.c.
Webs : 1 Row @ 4" o.c.
Use equal spacing between rows and stagger nails in each row to avoid splitting.

Brg blocks:0.131"x3" nails

brg	x-loc	#blocks	length/blk	#nails/blk	wall plate
2	24.333'	2	12"	14	Rigid Surface

Brg block to be same size and species as bottom chord.
Refer to drawing CNNAILSP0109 for more information.

*** Negative reaction(s) of -895# MAX. (See below) from a non-wind load case requires uplift connection.

110 mph wind, 15.00 ft mean hgt, ASCE 7-05, CLOSED bldg, not located within 4.50 ft from roof edge, CAT II, EXP C, wind TC DL=5.0 psf, wind BC DL=5.0 psf. Iw=1.00 GCpi(+/-)=0.18

Roof overhang supports 2.00 psf soffit load.

Deflection meets L/240 live and L/180 total load.

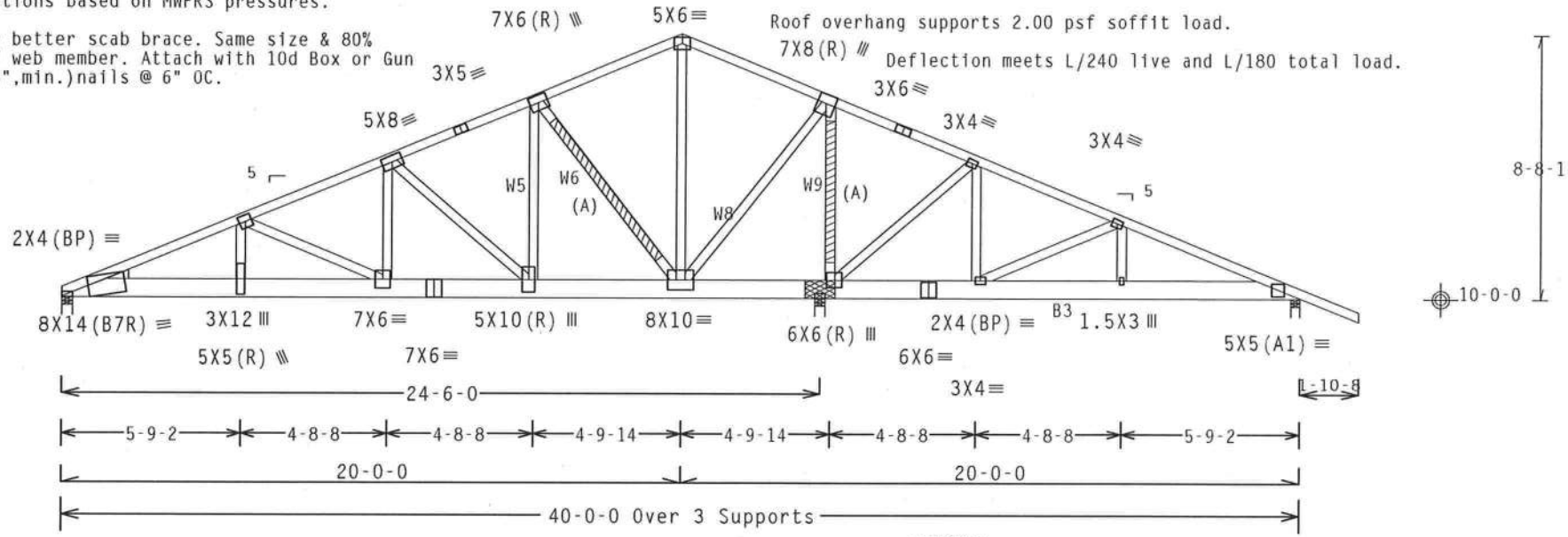

R=7820 U=1263 W=4"

R=1228 U=2521 W=4"

R=-896 Rw=64 U=0 W=3.5"
***

Design Crit: FBC2007Res/TPI-2002(STD)
FT/RT=20%(0%)/0(0)

PLT TYP. Wave

9.05.03.0319.17 QTY:

FL/-/4/-/-/R/-

Scale =.1875"/Ft.

ALPINE
ITW Building Components Group Inc.
Haines City, FL 33844
FL COA #0 278

WARNING TRUSSES REQUIRE EXTREME CARE IN FABRICATION, HANDLING, SHIPPING, INSTALLING AND BRACING. REFER TO BCSI (BUILDING COMPONENT SAFETY INFORMATION), PUBLISHED BY TPI (TRUSS PLATE INSTITUTE, 218 NORTH LEE STREET, SUITE 312, ALEXANDRIA, VA, 22314) AND WTCA (WOOD TRUSS COUNCIL OF AMERICA, 6300 ENTERPRISE LANE, MADISON, WI 53719) FOR SAFETY PRACTICES PRIOR TO PERFORMING THESE FUNCTIONS. UNLESS OTHERWISE INDICATED TOP CHORD SHALL HAVE PROPERLY ATTACHED STRUCTURAL PANELS AND BOTTOM CHORD SHALL HAVE A PROPERLY ATTACHED RIGID CEILING.

IMPORTANTFURNISH A COPY OF THIS DESIGN TO THE INSTALLATION CONTRACTOR. ITW BCG, INC. SHALL NOT BE RESPONSIBLE FOR ANY DEVIATION FROM THIS DESIGN; ANY FAILURE TO BUILD THE TRUSS IN CONFORMANCE WITH TPI; OR FABRICATING, HANDLING, SHIPPING, INSTALLING & BRACING OF TRUSSES.
DESIGN CONFORMS WITH APPLICABLE PROVISIONS OF NDS (NATIONAL DESIGN SPEC, BY AF&PA) AND TPI. ITW CONNECTOR PLATES ARE MADE OF 20/18/16GA (W,H/SS/K) ASTM A653 GRADE 40/60 (W, K/H,SS) GALV. STEEL. APPLY PLATES TO EACH FACE OF TRUSS AND, UNLESS OTHERWISE LOCATED ON THIS DESIGN, POSITION PER DRAWINGS 160A. ANY INSPECTION OF PLATES FOLLOWED BY (1) SHALL BE PER ANNEX A3 OF TPI1-2002 SEC.3. A SEAL ON THIS DRAWING INDICATES ACCEPTANCE OF PROFESSIONAL ENGINEERING RESPONSIBILITY SOLELY FOR THE TRUSS COMPONENT DESIGN SHOWN. THE SUITABILITY AND USE OF THIS COMPONENT FOR ANY BUILDING IS THE RESPONSIBILITY OF THE BUILDING DESIGNER PER ANSI/TPI 1 SEC. 2.

DOUGLAS FLEMING LICENSE No. 66648 STATE OF FLORIDA PROFESSIONAL ENGINEER

10/14/2010

TC LL	20.0 PSF	REF R487-- 3263
TC DL	10.0 PSF	DATE 10/14/10
BC DL	10.0 PSF	DRW HCUSR487 10287008
BC LL	0.0 PSF	HC-ENG KD/DF
TOT.LD.	40.0 PSF	SEQN- 150983
DUR.FAC.	1.25	FROM AH
SPACING	24.0"	JREF- 1U61487_Z01

(9-244--Fill in later EDGLEY -- , ** - H7B)

THIS DWG PREPARED FROM COMPUTER INPUT (LOADS & DIMENSIONS) SUBMITTED BY TRUSS MFR.

Top chord 2x6 SP #2 :T1 2x4 SP #2 Dense:
:T2 2x6 SP SS:
Bot chord 2x6 SP SS
Webs 2x4 SP #3 :W3, W11, W15 2x4 SP #2 Dense:
:W12, W17 2x6 SP #2:
:Lt Wedge 2x8 SP #1 Dense:

Brg blocks:0.131"x3" nails

brg	x-loc	#blocks	length/blk	#nails/blk	wall plate
1	0.000'	1	12"	4	Rigid Surface

Brg block to be same size and species as bottom chord.
Refer to drawing CNNAILSP0109 for more information.

(I) - plates so marked were sized using a Fabrication Tolerance of 0% and a Rotational Tolerance of 0 degrees.

110 mph wind, 15.00 ft mean hgt, ASCE 7-05, CLOSED bldg, not located within 4.50 ft from roof edge, CAT II, EXP C, wind TC DL=5.0 psf, wind BC DL=5.0 psf. Iw=1.00 GCpi(+/-)=0.18

Wind reactions based on MWFRS pressures.

(A) #3 or better scab brace. Same size & 80% length of web member. Attach with 10d Box or Gun (0.128"x3",min.)nails @ 6" OC.

Deflection meets L/240 live and L/180 total load.

Special loads
------(Lumber Dur.Fac.=1.25 / Plate Dur.Fac.=1.25)
TC- From 62 plf at -1.88 to 62 plf at 7.00
TC- From 62 plf at 7.00 to 62 plf at 21.67
TC- From 62 plf at 21.67 to 62 plf at 23.33
TC- From 62 plf at 23.33 to 62 plf at 24.79
TC- From 62 plf at 24.79 to 62 plf at 32.00
BC- From 4 plf at -1.88 to 4 plf at 0.00
BC- From 20 plf at 0.00 to 20 plf at 32.00
TC- 433.68 lb Conc. Load at 7.03
TC- 183.78 lb Conc. Load at 9.06,11.06,13.06
TC- -38.20 lb Conc. Load at 14.60
BC- 486.94 lb Conc. Load at 7.03
BC- 127.38 lb Conc. Load at 9.06,11.06,13.06
BC- 746.93 lb Conc. Load at 14.60
BC- 1535.63 lb Conc. Load at 21.73
BC- 504.70 lb Conc. Load at 23.73,25.73,27.73,29.73
31.73

Right end vertical not exposed to wind pressure.

Roof overhang supports 2.00 psf soffit load.

In lieu of structural panels use purlins to brace all flat TC @ 24" OC.

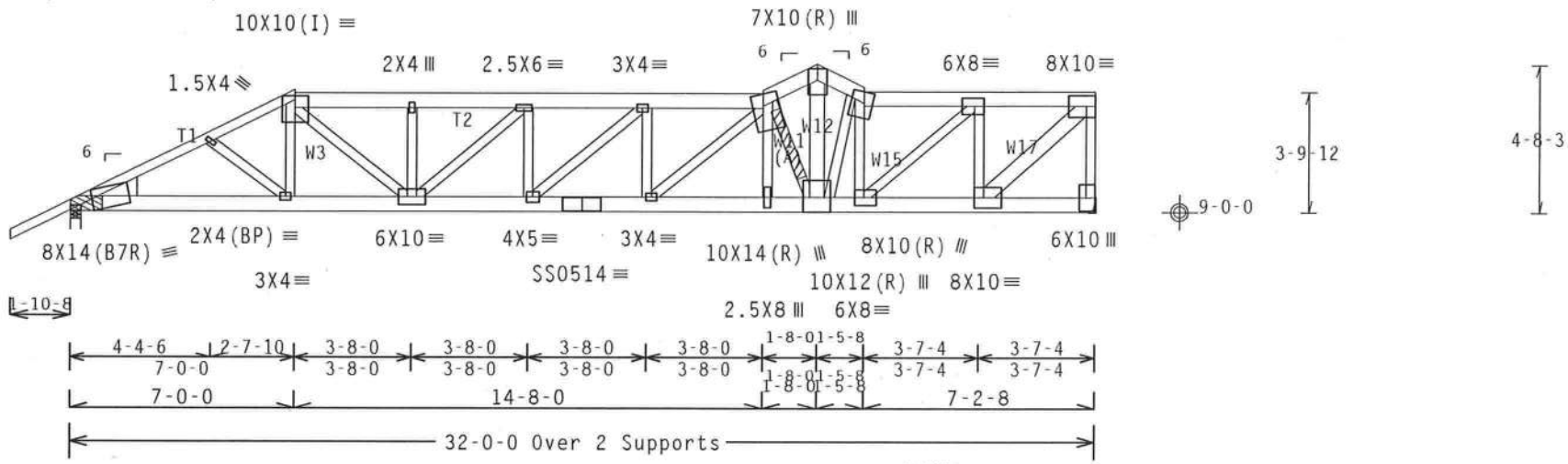

R=4009 U=1058 W=4"

R=5374 U=1095 H=Simpson HGUS28
R=1212 U=1160 Common, 0.162"x3.5" nails in Truss
R=4006 U=1060 Common, 0.162"x3.5" nails in Girder
Top chord and lumber is (2)2x8 SP #2

Design Crit: FBC2007Res/TPI-2002(STD)

PLT TYP. 18 Gauge HS,Wave FT/RT=20%(0%)/0(0) 9.05.03.0319.17 QTY 1 FL/-/4/-/-/R/- Scale =.1875"/Ft.

ALPINE
ITW Building Components Group Inc.
Haines City, FL 33844
FL COA #0 278

WARNING TRUSSES REQUIRE EXTREME CARE IN FABRICATION, HANDLING, SHIPPING, INSTALLING AND BRACING. REFER TO BCSI (BUILDING COMPONENT SAFETY INFORMATION), PUBLISHED BY TPI (TRUSS PLATE INSTITUTE, 218 NORTH LEE STREET, SUITE 312, ALEXANDRIA, VA, 22314) AND WTCA (WOOD TRUSS COUNCIL OF AMERICA, 6300 ENTERPRISE LANE, MADISON, WI 53719) FOR SAFETY PRACTICES PRIOR TO PERFORMING THESE FUNCTIONS. UNLESS OTHERWISE INDICATED TOP CHORD SHALL HAVE PROPERLY ATTACHED STRUCTURAL PANELS AND BOTTOM CHORD SHALL HAVE A PROPERLY ATTACHED RIGID CEILING.

IMPORTANTFURNISH A COPY OF THIS DESIGN TO THE INSTALLATION CONTRACTOR. ITW BCG, INC. SHALL NOT BE RESPONSIBLE FOR ANY DEVIATION FROM THIS DESIGN; ANY FAILURE TO BUILD THE TRUSS IN CONFORMANCE WITH TPI; OR FABRICATING, HANDLING, SHIPPING, INSTALLING & BRACING OF TRUSSES. DESIGN CONFORMS WITH APPLICABLE PROVISIONS OF NDS (NATIONAL DESIGN SPEC, BY AF&PA) AND TPI. ITW BCG, INC. CONNECTOR PLATES ARE MADE OF 20/18/16GA (W,H/SS/K) ASTM A653 GRADE 40/60 (W, K/H,SS) GALV. STEEL. APPLY PLATES TO EACH FACE OF TRUSS AND, UNLESS OTHERWISE LOCATED ON THIS DESIGN, POSITION PER DRAWINGS 160A. ANY INSPECTION OF PLATES FOLLOWED BY (1) SHALL BE PER ANNEX A3 OF TPI1-2002 SEC.3. A SEAL ON THIS DRAWING INDICATES ACCEPTANCE OF PROFESSIONAL ENGINEERING RESPONSIBILITY SOLELY FOR THE TRUSS COMPONENT DESIGN SHOWN. THE SUITABILITY AND USE OF THIS COMPONENT FOR ANY BUILDING IS THE RESPONSIBILITY OF THE BUILDING DESIGNER PER ANSI/TPI 1 SEC. 2.

DOUGLAS FLEMING LICENSED No. 66648 STATE OF FLORIDA PROFESSIONAL ENGINEER
10/14/2010

TC LL	20.0 PSF	REF	R487-- 3264
TC DL	10.0 PSF	DATE	10/14/10
BC DL	10.0 PSF	DRW	HCUSR487 10287029
BC LL	0.0 PSF	HC-ENG	KD/DF
TOT.LD.	40.0 PSF	SEQN-	151038
DUR.FAC.	1.25	FROM	AH
SPACING	24.0"	JREF-	1U61487_Z01

(9-244--Fill in later EDGLEY -- , ** - H7B1)

THIS DWG PREPARED FROM COMPUTER INPUT (LOADS & DIMENSIONS) SUBMITTED BY TRUSS MFR.

Top chord 2x4 SP #2 Dense :T1 2x6 SP SS:
:T2 2x6 SP #1 Dense:
Bot chord 2x6 SP SS :B2 2x6 SP #2:
Webs 2x4 SP #3 :W1, W6, W8, W11 2x4 SP #2 Dense:
:W2 2x6 SP #2:
:Lt Bearing Leg 2x6 SP #2:

Special loads
------(Lumber Dur.Fac.=1.25 / Plate Dur.Fac.=1.25)
TC- From 62 plf at 0.00 to 62 plf at 22.48
TC- From 62 plf at 22.48 to 62 plf at 23.33
TC- From 62 plf at 23.33 to 62 plf at 28.96
TC- From 62 plf at 28.96 to 62 plf at 32.00
BC- From 20 plf at 0.46 to 20 plf at 32.00
PLT- 192.77 lb Conc. Load at (0.90,13.10), (2.90,13.10), (4.90,13.10) (6.90,13.10), (8.90,13.10), (10.90,13.10), (12.90,13.10)
BC- 1206.10 lb Conc. Load at 14.54
PLB- 135.73 lb Conc. Load at (0.90, 9.04), (2.90,9.04), (4.90,9.04) (6.90,9.04), (8.90,9.04), (10.90,9.04), (12.90,9.04)

Wind reactions based on MWFRS pressures.

110 mph wind, 15.00 ft mean hgt, ASCE 7-05, CLOSED bldg, not located within 4.50 ft from roof edge, CAT II, EXP C, wind TC DL=5.0 psf, wind BC DL=5.0 psf. Iw=1.00 GCpi(+/-)=0.18

Max JT VERT DEFL: LL: 0.31" DL: 0.31" recommended camber 1/2"

(A) #3 or better scab brace. Same size & 80% length of web member. Attach with 10d Box or Gun (0.128"x3",min.)nails @ 6" OC.

In lieu of structural panels use purlins to brace all flat TC @ 24" OC.

Deflection meets L/240 live and L/180 total load.

The TC of this truss shall be braced with attached spans at 24" OC in lieu of structural sheathing.

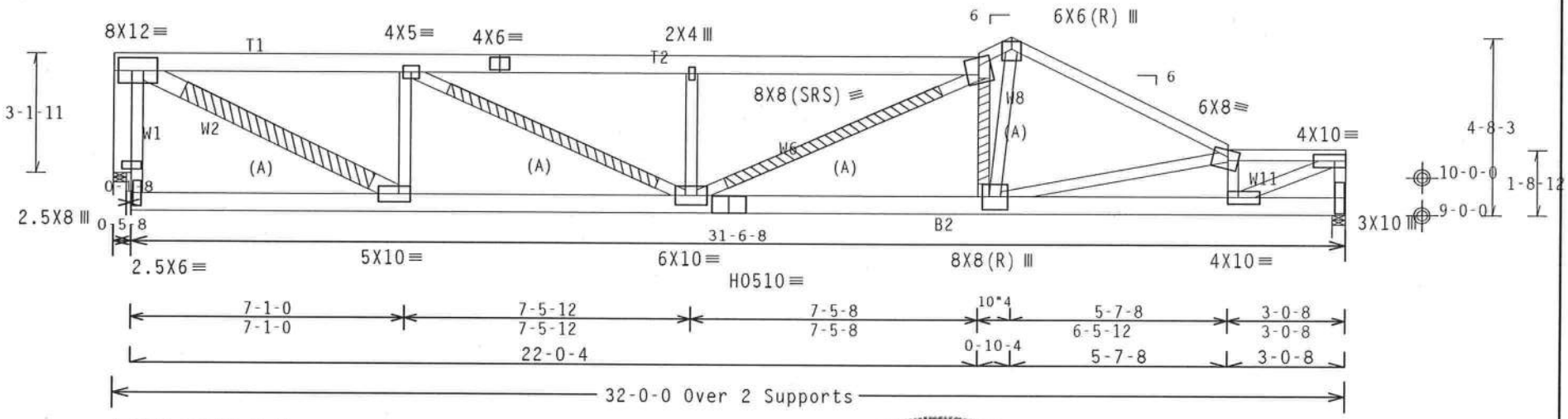

Design Crit: FBC2007Res/TPI-2002(STD)

PLT TYP. 20 Gauge HS,Wave FT/RT=20%(0%)/0(0) 9.05.03.0319.17 QTY:

FL/-/4/-/-/R/- Scale =.25"/Ft.

ALPINE
ITW Building Components Group Inc.
Haines City, FL 33844
FL COA #0 278

WARNING TPUSSES REQUIRE EXTREME CARE IN FABRICATION, HANDLING, SHIPPING, INSTALLING AND BRACING. REFER TO BCSI (BUILDING COMPONENT SAFETY INFORMATION), PUBLISHED BY TPI (TPUSS PLATE INSTITUTE, 218 NORTH LEE STREET, SUITE 312, ALEXANDRIA, VA, 22314) AND WTCA (WOOD TRUSS COUNCIL OF AMERICA, 6300 ENTERPRISE LANE, MADISON, WI 53719) FOR SAFETY PRACTICES PRIOR TO PERFORMING THESE FUNCTIONS. UNLESS OTHERWISE INDICATED TOP CHORD SHALL HAVE PROPERLY ATTACHED STRUCTURAL PANELS AND BOTTOM CHORD SHALL HAVE A PROPERLY ATTACHED RIGID CEILING.

IMPORTANTFURNISH A COPY OF THIS DESIGN TO THE INSTALLATION CONTRACTOR. ITW BCG, INC. SHALL NOT BE RESPONSIBLE FOR ANY DEVIATION FROM THIS DESIGN; ANY FAILURE TO BUILD THE TRUSS IN CONFORMANCE WITH TPI; OR FABRICATING, HANDLING, SHIPPING, INSTALLING & BRACING OF TRUSSES. DESIGN CONFORMS WITH APPLICABLE PROVISIONS OF NDS (NATIONAL DESIGN SPEC, BY AF&PA) AND TPI. ITW BCG CONNECTOR PLATES ARE MADE OF 20/18/16GA (W,H/SS/K) ASTM A653 GRADE 40/60 (W, K/H,SS) GALV. STEEL. APPLY PLATES TO EACH FACE OF TRUSS AND, UNLESS OTHERWISE LOCATED ON THIS DESIGN, POSITION PER DRAWINGS 160A. ANY INSPECTION OF PLATES FOLLOWED BY (1) SHALL BE PER ANNEX A3 OF TPI1-2002 SEC.3. A SEAL ON THIS DRAWING INDICATES ACCEPTANCE OF PROFESSIONAL ENGINEERING RESPONSIBILITY SOLELY FOR THE TRUSS COMPONENT DESIGN SHOWN. THE SUITABILITY AND USE OF THIS COMPONENT FOR ANY BUILDING IS THE RESPONSIBILITY OF THE BUILDING DESIGNER PER ANSI/TPI 1 SEC. 2.

DOUGLAS FLEMING LICENSE No. 66648 STATE OF FLORIDA PROFESSIONAL ENGINEER

10/14/2010

TC LL	20.0 PSF	REF	R487-- 3265
TC DL	10.0 PSF	DATE	10/14/10
BC DL	10.0 PSF	DRW	HCUSR487 10287001
BC LL	0.0 PSF	HC-ENG	KD/DF
TOT.LD.	40.0 PSF	SEQN-	152475
DUR.FAC.	1.25	FROM	AH
SPACING	24.0"	JREF-	1U61487_Z01

(9-244--Fill in later EDGLEY -- , ** - H9B1)

THIS DWG PREPARED FROM COMPUTER INPUT (LOADS & DIMENSIONS) SUBMITTED BY TRUSS MFR.

Top chord 2x4 SP #2 Dense
Bot chord 2x4 SP #2 Dense
Webs 2x4 SP #3 :W1 2x4 SP #2 Dense:
:Lt Bearing Leg 2x6 SP #2:

Roof overhang supports 2.00 psf soffit load.

In lieu of structural panels use purlins to brace all flat TC @ 24" OC.

Bottom chord checked for 10.00 psf non-concurrent live load.

MWFRS loads based on trusses located at least 7.50 ft. from roof edge.

110 mph wind, 15.00 ft mean hgt, ASCE 7-05, CLOSED bldg, not located within 4.50 ft from roof edge, CAT II, EXP C, wind TC DL=5.0 psf, wind BC DL=5.0 psf. Iw=1.00 GCpi(+/-)=0.18

Wind reactions based on MWFRS pressures.

(A) #3 or better scab brace. Same size & 80% length of web member. Attach with 10d Box or Gun (0.128"x3",min.)nails @ 6" OC.

Deflection meets L/240 live and L/180 total load.

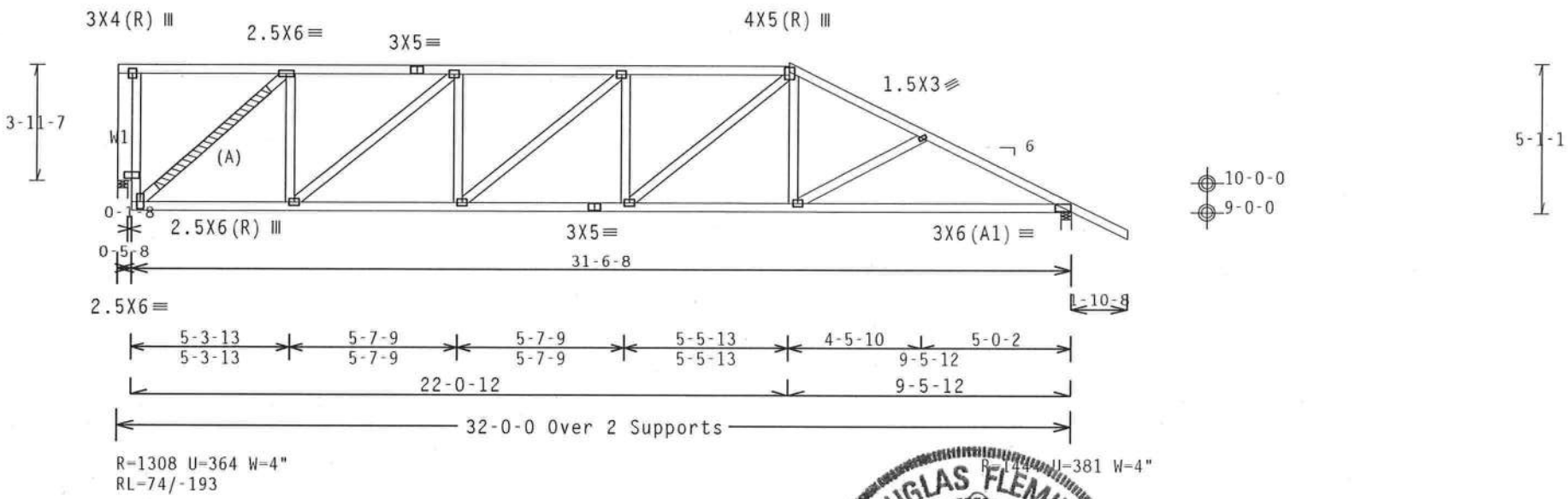

Note: All Plates Are 3X4 Except As Shown.

Design Crit: FBC2007Res/TPI-2002(STD)

PLT TYP. Wave

FT/RT=20%(0%)/0(0)

9.05.03.0319.17

QTY:

FL/-/4/-/-/R/-

Scale =.1875"/Ft.

ALPINE
ITW Building Components Group Inc.
Haines City, FL 33844
FL COA #0 278

WARNING TRUSSES REQUIRE EXTREME CARE IN FABRICATION, HANDLING, SHIPPING, INSTALLING AND BRACING. REFER TO BCSI (BUILDING COMPONENT SAFETY INFORMATION), PUBLISHED BY TPI (TRUSS PLATE INSTITUTE, 218 NORTH LEE STREET, SUITE 312, ALEXANDRIA, VA. 22314) AND WTCA (WOOD TRUSS COUNCIL OF AMERICA, 6300 ENTERPRISE LANE, MADISON, WI 53719) FOR SAFETY PRACTICES PRIOR TO PERFORMING THESE FUNCTIONS. UNLESS OTHERWISE INDICATED TOP CHORD SHALL HAVE PROPERLY ATTACHED STRUCTURAL PANELS AND BOTTOM CHORD SHALL HAVE A PROPERLY ATTACHED RIGID CEILING.

IMPORTANTFURNISH A COPY OF THIS DESIGN TO THE INSTALLATION CONTRACTOR. ITW BCG, INC. SHALL NOT BE RESPONSIBLE FOR ANY DEVIATION FROM THIS DESIGN; ANY FAILURE TO BUILD THE TRUSS IN CONFORMANCE WITH TPI1; OR FABRICATING, HANDLING, SHIPPING, INSTALLING & BRACING OF TRUSSES. DESIGN CONFORMS WITH APPLICABLE PROVISIONS OF NDS (NATIONAL DESIGN SPEC. BY AF&PA) AND TPI. ITW BCG CONNECTOR PLATES ARE MADE OF 20/18/16GA (W,H/SS/K) ASTM A653 GRADE 40/60 (W, K/H,SS) GALV. STEEL. APPLIED PLATES TO EACH FACE OF TRUSS AND, UNLESS OTHERWISE LOCATED ON THIS DESIGN, POSITION PER DRAWINGS 160A-2. ANY INSPECTION OF PLATES FOLLOWED BY (1) SHALL BE PER ANNEX A3 OF TPI1-2002 SEC.3. A SEAL ON THIS DRAWING INDICATES ACCEPTANCE OF PROFESSIONAL ENGINEERING RESPONSIBILITY SOLELY FOR THE TRUSS COMPONENT DESIGN SHOWN. THE SUITABILITY AND USE OF THIS COMPONENT FOR ANY BUILDING IS THE RESPONSIBILITY OF THE BUILDING DESIGNER PER ANSI/TPI 1 SEC. 2.

DOUGLAS FLEMING
LICENSE
No. 66648
STATE OF
FLORIDA
PROFESSIONAL ENGINEER

10/14/2010

TC LL	20.0 PSF	REF	R487-- 3266
TC DL	10.0 PSF	DATE	10/14/10
BC DL	10.0 PSF	DRW	HCUSR487 10287002
BC LL	0.0 PSF	HC-ENG	KD/DF
TOT.LD.	40.0 PSF	SEQN-	152480
DUR.FAC.	1.25	FROM	AH
SPACING	24.0"	JREF-	1U61487_Z01

(9-244--Fill in later EDGLEY -- , ** - H13B1)

THIS DWG PREPARED FROM COMPUTER INPUT (LOADS & DIMENSIONS) SUBMITTED BY TRUSS MFR.

Top chord 2x4 SP #2 Dense
Bot chord 2x4 SP #2 Dense
Webs 2x4 SP #3
:Lt Bearing Leg 2x6 SP #2:

Roof overhang supports 2.00 psf soffit load.

In lieu of structural panels use purlins to brace all flat TC @ 24" OC.

Truss passed check for 20 psf additional bottom chord live load in areas with 42"-high x 24"-wide clearance.

MWFRS loads based on trusses located at least 15.00 ft. from roof edge.

110 mph wind, 15.00 ft mean hgt, ASCE 7-05, CLOSED bldg, not located within 4.50 ft from roof edge, CAT II, EXP C, wind TC DL=5.0 psf, wind BC DL=5.0 psf. Iw=1.00 GCpi(+/-)=0.18

Wind reactions based on MWFRS pressures.

(A) #3 or better scab brace. Same size & 80% length of web member. Attach with 10d Box or Gun (0.128"x3",min.)nails @ 6" OC.

Bottom chord checked for 10.00 psf non-concurrent live load.

Deflection meets L/240 live and L/180 total load.

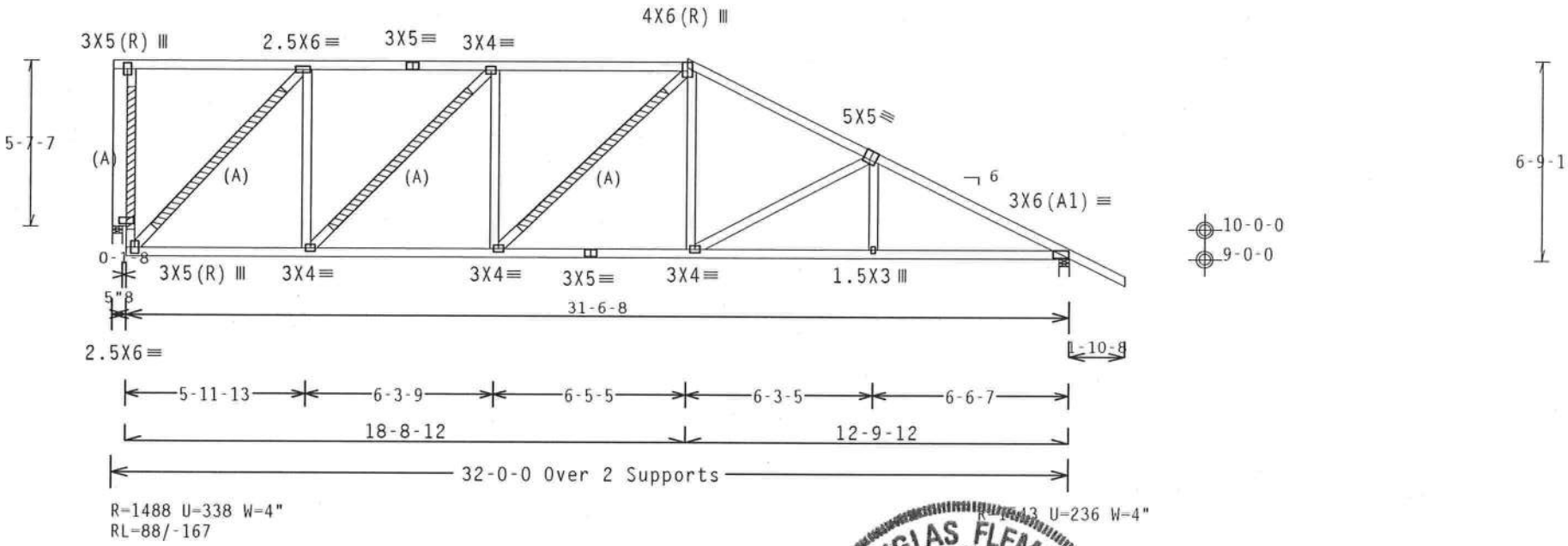

Design Crit: FBC2007Res/TPI-2002(STD)

PLT TYP. Wave | FT/RT=20%(0%)/0(0) | 9.05.03.0319.17 | QTY 1 | FL/-/4/-/-/R/- | Scale =.1875"/Ft.

ALPINE
ITW Building Components Group Inc.
Haines City, FL 33844
FL COA #0 278

WARNING TRUSSES REQUIRE EXTREME CARE IN FABRICATION, HANDLING, SHIPPING, INSTALLING AND BRACING. REFER TO BCSI (BUILDING COMPONENT SAFETY INFORMATION), PUBLISHED BY TPI (TRUSS PLATE INSTITUTE, 218 NORTH LEE STREET, SUITE 312, ALEXANDRIA, VA, 22314) AND WTCA (WOOD TRUSS COUNCIL OF AMERICA, 6300 ENTERPRISE LANE, MADISON, WI 53719) FOR SAFETY PRACTICES PRIOR TO PERFORMING THESE FUNCTIONS. UNLESS OTHERWISE INDICATED TOP CHORD SHALL HAVE PROPERLY ATTACHED STRUCTURAL PANELS AND BOTTOM CHORD SHALL HAVE A PROPERLY ATTACHED RIGID CEILING.

IMPORTANT FURNISH A COPY OF THIS DESIGN TO THE INSTALLATION CONTRACTOR. ITW BCG, INC. SHALL NOT BE RESPONSIBLE FOR ANY DEVIATION FROM THIS DESIGN; ANY FAILURE TO BUILD THE TRUSS IN CONFORMANCE WITH TPI; OR FABRICATING, HANDLING, SHIPPING, INSTALLING & BRACING OF TRUSSES. DESIGN CONFORMS WITH APPLICABLE PROVISIONS OF NDS (NATIONAL DESIGN SPEC. BY AF&PA) AND TPI. THE BCG CONNECTOR PLATES ARE MADE OF 20/18/16GA (N,H/SS/X) ASTM A653 GRADE 40/60 (N, K/H,SS) GALV. STEEL. APPLY PLATES TO EACH FACE OF TRUSS AND, UNLESS OTHERWISE LOCATED ON THIS DESIGN, POSITION PER DRAWINGS 16047. ANY INSPECTION OF PLATES FOLLOWED BY (1) SHALL BE PER ANNEX A3 OF TPI1-2002 SEC.3. A SEAL ON THIS DRAWING INDICATES ACCEPTANCE OF PROFESSIONAL ENGINEERING RESPONSIBILITY SOLELY FOR THE TRUSS COMPONENT DESIGN SHOWN. THE SUITABILITY AND USE OF THIS COMPONENT FOR ANY BUILDING IS THE RESPONSIBILITY OF THE BUILDING DESIGNER PER ANSI/TPI 1 SEC. 2.

DOUGLAS FLEMING LICENSE No.66648 STATE OF FLORIDA PROFESSIONAL ENGINEER
10/14/2010

TC LL	20.0 PSF	REF	R487-- 3267
TC DL	10.0 PSF	DATE	10/14/10
BC DL	10.0 PSF	DRW	HCUSR487 10287003
BC LL	0.0 PSF	HC-ENG	KD/DF
TOT.LD.	40.0 PSF	SEQN-	152511
DUR.FAC.	1.25	FROM	AH
SPACING	24.0"	JREF-	1U61487_Z01

(9-244--Fill in later EDGLEY -- , ** - H15B1)

Top chord 2x4 SP #2 Dense
Bot chord 2x4 SP #2 Dense
Webs 2x4 SP #3 :W1 2x4 SP #2 Dense:
:Lt Bearing Leg 2x6 SP #2:

Roof overhang supports 2.00 psf soffit load.

In lieu of structural panels use purlins to brace all flat TC @ 24" OC.

Truss passed check for 20 psf additional bottom chord live load in areas with 42"-high x 24"-wide clearance.

MWFRS loads based on trusses located at least 15.00 ft. from roof edge.

110 mph wind, 15.00 ft mean hgt, ASCE 7-05, CLOSED bldg, not located within 4.50 ft from roof edge, CAT II, EXP C, wind TC DL=5.0 psf, wind BC DL=5.0 psf. Iw=1.00 GCpi(+/-)=0.18

Wind reactions based on MWFRS pressures.

(A) #3 or better scab brace. Same size & 80% length of web member. Attach with 10d Box or Gun (0.128"x3",min.)nails @ 6" OC.

Bottom chord checked for 10.00 psf non-concurrent live load.

Deflection meets L/240 live and L/180 total load.

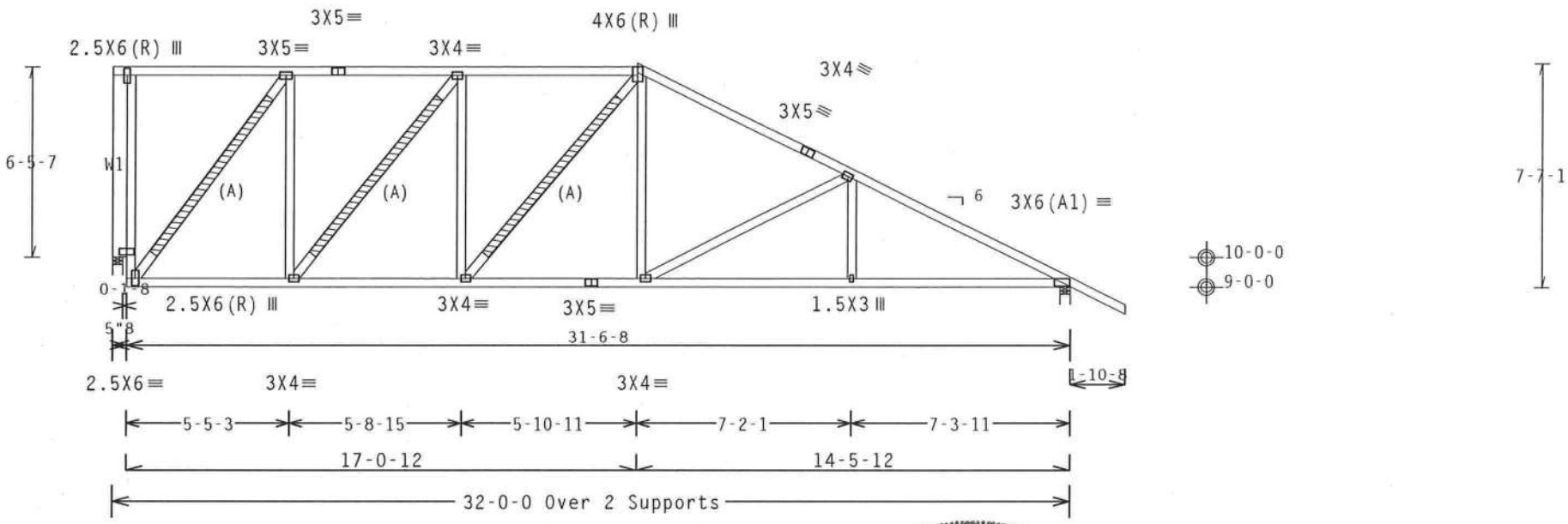

R=1509 U=333 W=4"
RL=95/-186

R=155 U=221 W=4"

Design Crit: FBC2007Res/TPI-2002(STD)

PLT TYP. Wave FT/RT=20%(0%)/0(0) 9.05.03.0319.17 QTY: FL/-/4/-/-/R/- Scale =.1875"/Ft.

ALPINE
ITW Building Components Group Inc.
Haines City, FL 33844
FL COA #0 278

WARNING TRUSSES REQUIRE EXTREME CARE IN FABRICATION, HANDLING, SHIPPING, INSTALLING AND BRACING. REFER TO BCSI (BUILDING COMPONENT SAFETY INFORMATION), PUBLISHED BY TPI (TRUSS PLATE INSTITUTE, 218 NORTH LEE STREET, SUITE 312, ALEXANDRIA, VA. 22314) AND WTCA (WOOD TRUSS COUNCIL OF AMERICA, 6300 ENTERPRISE LANE, MADISON, WI 53719) FOR SAFETY PRACTICES PRIOR TO PERFORMING THESE FUNCTIONS. UNLESS OTHERWISE INDICATED TOP CHORD SHALL HAVE PROPERLY ATTACHED STRUCTURAL PANELS AND BOTTOM CHORD SHALL HAVE A PROPERLY ATTACHED RIGID CEILING.

IMPORTANTFURNISH A COPY OF THIS DESIGN TO THE INSTALLATION CONTRACTOR. ITW BCG, INC. SHALL NOT BE RESPONSIBLE FOR ANY DEVIATION FROM THIS DESIGN; ANY FAILURE TO BUILD THE TRUSS IN CONFORMANCE WITH TPI; OR FABRICATING, HANDLING, SHIPPING, INSTALLING & BRACING OF TRUSSES. DESIGN CONFORMS WITH APPLICABLE PROVISIONS OF NDS (NATIONAL DESIGN SPEC. BY AF&PA) AND TPI. ITW BCG CONNECTOR PLATES ARE MADE OF 20/18/16GA (W,H/SS/K) ASTM A653 GRADE 40/60 (W, K/H,SS) GALV. STEEL. APPLY PLATES TO EACH FACE OF TRUSS AND, UNLESS OTHERWISE LOCATED ON THIS DESIGN, POSITION PER DRAWINGS 160A-2. ANY INSPECTION OF PLATES FOLLOWED BY (I) SHALL BE PER ANNEX A3 OF TPI1-2002 SEC.3. A SEAL ON THIS DRAWING INDICATES ACCEPTANCE OF PROFESSIONAL ENGINEERING RESPONSIBILITY SOLELY FOR THE TRUSS COMPONENT DESIGN SHOWN. THE SUITABILITY AND USE OF THIS COMPONENT FOR ANY BUILDING IS THE RESPONSIBILITY OF THE BUILDING DESIGNER PER ANSI/TPI 1 SEC. 2.

DOUGLAS FLEMING LICENSE No. 66648 STATE OF FLORIDA PROFESSIONAL ENGINEER
10/14/2010

TC LL	20.0 PSF	REF R487-- 3268
TC DL	10.0 PSF	DATE 10/14/10
BC DL	10.0 PSF	DRW HCUSR487 10287004
BC LL	0.0 PSF	HC-ENG KD/DF
TOT.LD.	40.0 PSF	SEQN- 152525
DUR.FAC.	1.25	FROM AH
SPACING	24.0"	JREF- 1U61487_Z01

(9-244--Fill in later EDGLEY -- , ** - B10)

Top chord 2x4 SP #2 Dense
Bot chord 2x4 SP #2 Dense
Webs 2x4 SP #3

Left end vertical not exposed to wind pressure.

Roof overhang supports 2.00 psf soffit load.

In lieu of structural panels use purlins to brace all flat TC @ 24" OC.

Bottom chord checked for 10.00 psf non-concurrent live load.

Deflection meets L/240 live and L/180 total load.

110 mph wind, 15.00 ft mean hgt, ASCE 7-05, CLOSED bldg, not located within 4.50 ft from roof edge, CAT II, EXP C, wind TC DL=5.0 psf, wind BC DL=5.0 psf. Iw=1.00 GCpi(+/-)=0.18

Wind reactions based on MWFRS pressures.

(A) #3 or better scab brace. Same size & 80% length of web member. Attach with 10d Box or Gun (0.128"x3",min.)nails @ 6" OC.

Truss passed check for 20 psf additional bottom chord live load in areas with 42"-high x 24"-wide clearance.

MWFRS loads based on trusses located at least 15.00 ft. from roof edge.

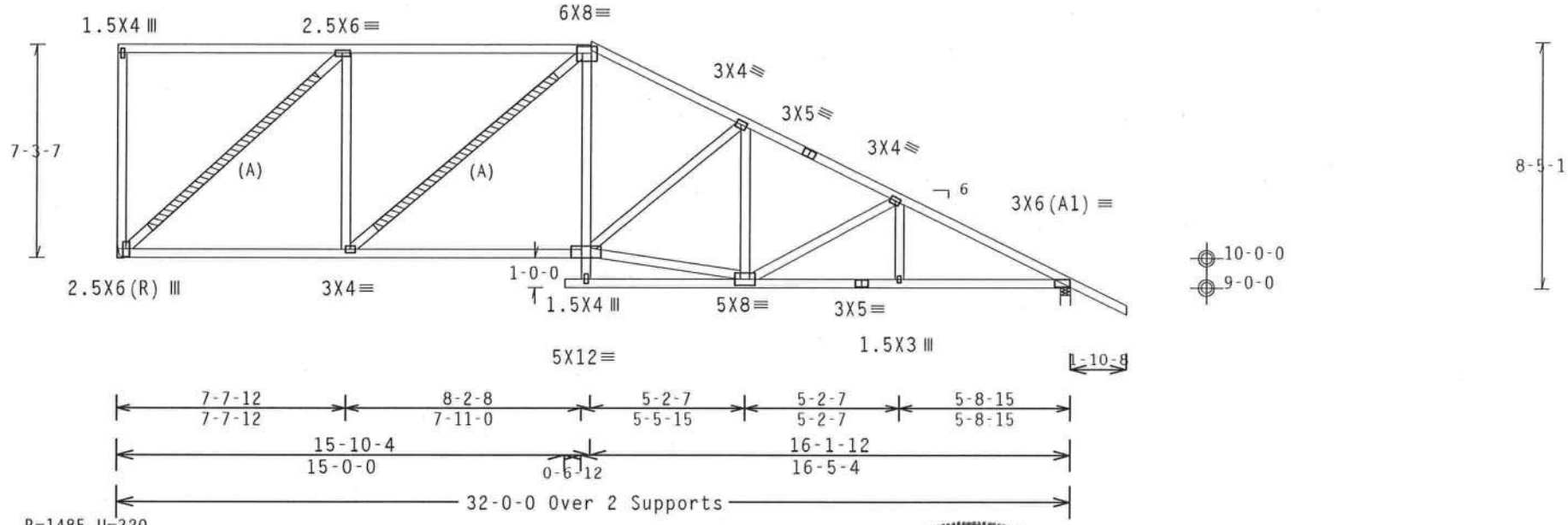

R=1485 U=320
RL=101/-205 H=Simpson HUS26
w/ (4) 10d Common, 0.148"x3.0" nails in Truss
w/ (14) 10d Common, 0.148"x3.0" nails in Girder
Supporting Member is (2)2x6 SP #2 Design Crit: FBC2007Res/TPI-2002(STD)

PLT TYP. Wave FT/RT=20%(0%)/0(0) 9.05.03.0319.17 QTY: FL/-/4/-/-/R/- Scale =.1875"/Ft.

ALPINE
ITW Building Components Group Inc.
Haines City, FL 33844
FL COA #0 278

DOUGLAS FLEMING LICENSE No. 66648 STATE OF FLORIDA PROFESSIONAL ENGINEER

10/14/2010

TC LL	20.0 PSF	REF R487-- 3269
TC DL	10.0 PSF	DATE 10/14/10
BC DL	10.0 PSF	DRW HCUSR487 10287049
BC LL	0.0 PSF	HC-ENG KD/DF
TOT.LD.	40.0 PSF	SEQN- 151055
DUR.FAC.	1.25	FROM AH
SPACING	24.0"	JREF- 1U61487_Z01

(9-244--Fill in later EDGLEY -- , ** - B9)

THIS DWG PREPARED FROM COMPUTER INPUT (LOADS & DIMENSIONS) SUBMITTED BY TRUSS MFR.

Top chord 2x4 SP #2 Dense
Bot chord 2x4 SP #2 Dense
Webs 2x4 SP #3

Left end vertical not exposed to wind pressure.

Roof overhang supports 2.00 psf soffit load.

In lieu of structural panels use purlins to brace all flat TC @ 24" OC.

Bottom chord checked for 10.00 psf non-concurrent live load.

Deflection meets L/240 live and L/180 total load.

110 mph wind, 15.00 ft mean hgt, ASCE 7-05, CLOSED bldg, not located within 4.50 ft from roof edge, CAT II, EXP C, wind TC DL=5.0 psf, wind BC DL=5.0 psf. Iw=1.00 GCpi(+/-)=0.18

Wind reactions based on MWFRS pressures.

(A) #3 or better scab brace. Same size & 80% length of web member. Attach with 10d Box or Gun (0.128"x3",min.)nails @ 6" OC.

Truss passed check for 20 psf additional bottom chord live load in areas with 42"-high x 24"-wide clearance.

MWFRS loads based on trusses located at least 15.00 ft. from roof edge.

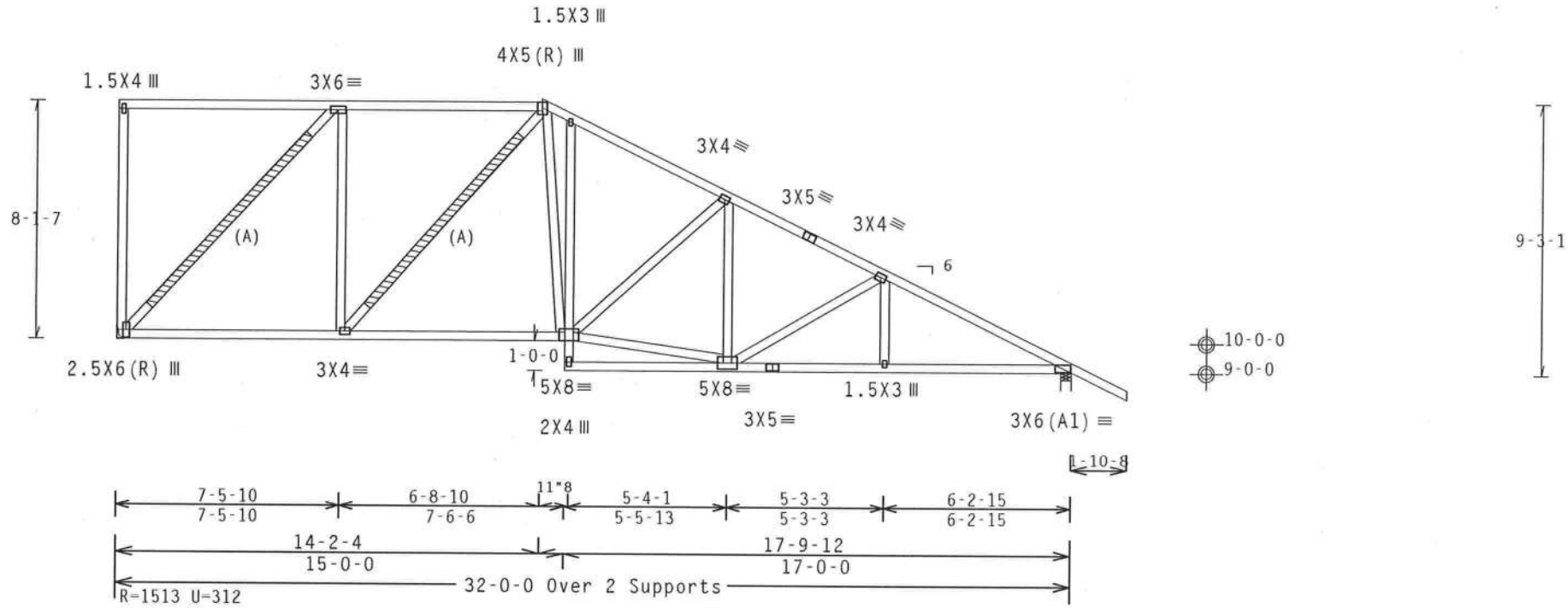

R=1513 U=312
RL=108/-224 H=Simpson HUS26
w/ (4) 10d Common, 0.148"x3.0" nails in Truss
w/ (14) 10d Common, 0.148"x3.0" nails in Girder
Supporting Member is (2)2x6 SP #2

Design Crit: FBC2007Res/TPI-2002(STD)

PLT TYP. Wave FT/RT=20%(0%)/0(0) 9.09.03.0319.17 QTY 1 FL/-/4/-/-/R/- Scale =.1875"/Ft.

ALPINE
ITW Building Components Group Inc.
Haines City, FL 33844
FL COA #0 278

WARNING TRUSSES REQUIRE EXTREME CARE IN FABRICATION, HANDLING, SHIPPING, INSTALLING AND BRACING. REFER TO BCSI (BUILDING COMPONENT SAFETY INFORMATION), PUBLISHED BY TPI (TRUSS PLATE INSTITUTE, 218 N. NORTH LEE STREET, SUITE 312, ALEXANDRIA, VA. 22314) AND WTCA (WOOD TRUSS COUNCIL OF AMERICA, 6300 ENTERPRISE LANE, MADISON, WI 53719) FOR SAFETY PRACTICES PRIOR TO PERFORMING THESE FUNCTIONS. UNLESS OTHERWISE INDICATED TOP CHORD SHALL HAVE PROPERLY ATTACHED STRUCTURAL PANELS AND BOTTOM CHORD SHALL HAVE A PROPERLY ATTACHED RIGID CEILING.

IMPORTANTFURNISH A COPY OF THIS DESIGN TO THE INSTALLATION CONTRACTOR. ITW BCG, INC. SHALL NOT BE RESPONSIBLE FOR ANY DEVIATION FROM THIS DESIGN; ANY FAILURE TO BUILD THE TRUSS IN CONFORMANCE WITH TPI; OR FABRICATING, HANDLING, SHIPPING, INSTALLING & BRACING OF TRUSSES. DESIGN CONFORMS WITH APPLICABLE PROVISIONS OF NDS (NATIONAL DESIGN SPEC. BY AF&PA) AND TPI. 1 PLY CONNECTOR PLATES ARE MADE OF 20/18/16GA (H,H/SS/K) ASTM A653 GRADE 40/60 (N, K/H,SS) GALV. STEEL. APPLY PLATES TO EACH FACE OF TRUSS AND, UNLESS OTHERWISE LOCATED ON THIS DESIGN, POSITION PER DRAWINGS 160 AND ANY INSPECTION OF PLATES FOLLOWED BY (1) SHALL BE PER ANNEX A3 OF TPI1-2002 SEC.3. A SEAL ON THIS DRAWING INDICATES ACCEPTANCE OF PROFESSIONAL ENGINEERING RESPONSIBILITY SOLELY FOR THE TRUSS COMPONENT DESIGN SHOWN. THE SUITABILITY AND USE OF THIS COMPONENT FOR ANY BUILDING IS THE RESPONSIBILITY OF THE BUILDING DESIGNER PER ANSI/TPI 1 SEC. 2.

DOUGLAS FLEMING LICENSE No. 66648 STATE OF FLORIDA PROFESSIONAL ENGINEER
10/14/2010

TC LL	20.0 PSF	REF R487-- 3270
TC DL	10.0 PSF	DATE 10/14/10
BC DL	10.0 PSF	DRW HCUSR487 10287050
BC LL	0.0 PSF	HC-ENG KD/DF
TOT.LD.	40.0 PSF	SEQN- 151064
DUR.FAC.	1.25	FROM AH
SPACING	24.0"	JREF- 1U61487_Z01

(9-244--Fill in later EDGLEY -- , ** - H9B)

THIS DWG PREPARED FROM COMPUTER INPUT (LOADS & DIMENSIONS) SUBMITTED BY TRUSS MFR.

Top chord 2x4 SP #2 Dense
Bot chord 2x4 SP #2 Dense
Webs 2x4 SP #3

Roof overhang supports 2.00 psf soffit load.

(A) #3 or better scab brace. Same size & 80% length of web member. Attach with 10d Box or Gun (0.128"x3",min.)nails @ 6" OC.

Bottom chord checked for 10.00 psf non-concurrent live load.

Deflection meets L/240 live and L/180 total load.

110 mph wind, 15.00 ft mean hgt, ASCE 7-05, CLOSED bldg, not located within 4.50 ft from roof edge, CAT II, EXP C, wind TC DL=5.0 psf, wind BC DL=5.0 psf. Iw=1.00 GCpi(+/-)=0.18

Wind reactions based on MWFRS pressures.

Right end vertical not exposed to wind pressure.

In lieu of structural panels use purlins to brace all flat TC @ 24" OC.

MWFRS loads based on trusses located at least 7.50 ft. from roof edge.

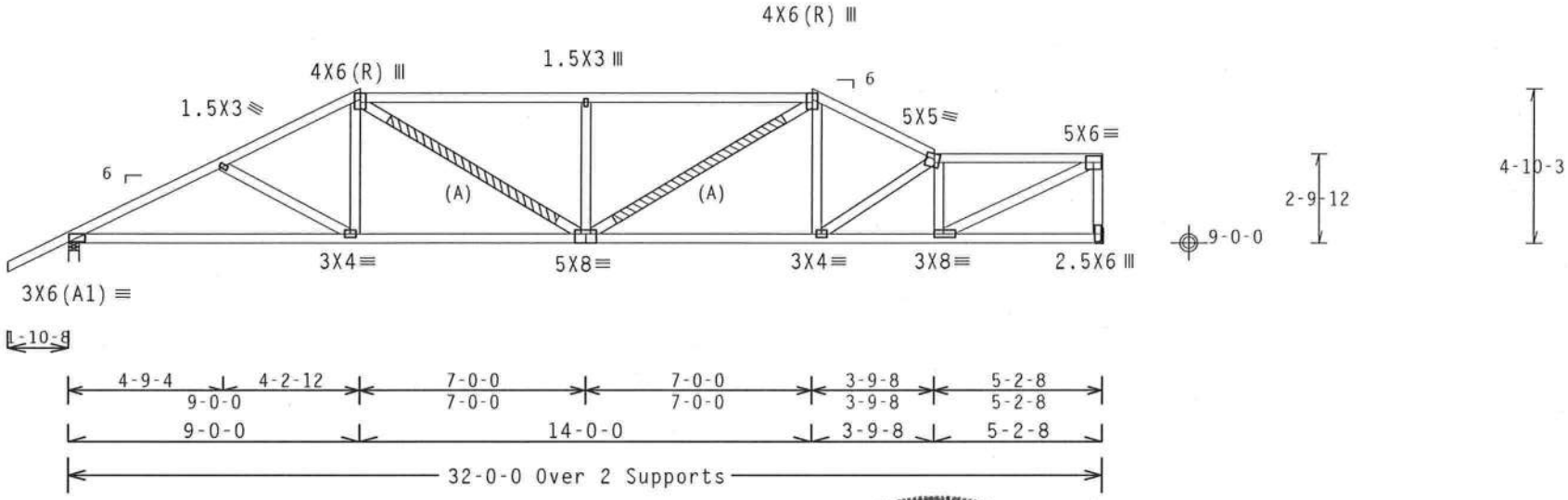

R=1453 U=385 W=4"
RL=138/-115

R=139/ U=119 H-Simpson HUS26
Top chord common, 0.148"x3.0" nails in Truss
Bottom chord common, 0.148"x3.0" nails in Girder
Supporting Member is (2)2x6 SP #2

Design Crit: FBC2007Res/TPI-2002(STD)

PLT TYP. Wave FT/RT=20%(0%)/0(0) 9.05.03.0319.17 QTY: FL/-/4/-/-/R/- Scale =.1875"/Ft.

ALPINE
ITW Building Components Group Inc.
Haines City, FL 33844
FL COA #0 278

WARNING TRUSSES REQUIRE EXTREME CARE IN FABRICATION, HANDLING, SHIPPING, INSTALLING AND BRACING. REFER TO BCSI (BUILDING COMPONENT SAFETY INFORMATION), PUBLISHED BY TPI (TRUSS PLATE INSTITUTE, 218 NORTH LEE STREET, SUITE 312, ALEXANDRIA, VA. 22314) AND WTCA (WOOD TRUSS COUNCIL OF AMERICA, 6300 ENTERPRISE LANE, MADISON, WI 53719) FOR SAFETY PRACTICES PRIOR TO PERFORMING THESE FUNCTIONS. UNLESS OTHERWISE INDICATED TOP CHORD SHALL HAVE PROPERLY ATTACHED STRUCTURAL PANELS AND BOTTOM CHORD SHALL HAVE A PROPERLY ATTACHED RIGID CEILING.

IMPORTANTFURNISH A COPY OF THIS DESIGN TO THE INSTALLATION CONTRACTOR. ITW BCG, INC. SHALL NOT BE RESPONSIBLE FOR ANY DEVIATION FROM THIS DESIGN; ANY FAILURE TO BUILD THE TRUSS IN CONFORMANCE WITH TPI; OR FABRICATING, HANDLING, SHIPPING, INSTALLING & BRACING OF TRUSSES. DESIGN CONFORMS WITH APPLICABLE PROVISIONS OF NDS (NATIONAL DESIGN SPEC. BY AF&PA) AND TPI. ITW BCG CONNECTOR PLATES ARE MADE OF 20/18/16GA (W,H/SS/K) ASTM A653 GRADE 40/60 (W, K/H,SS) GALV. STEEL. APPLY PLATES TO EACH FACE OF TRUSS AND, UNLESS OTHERWISE LOCATED ON THIS DESIGN, POSITION PER DRAWINGS 160A-2. ANY INSPECTION OF PLATES FOLLOWED BY (1) SHALL BE PER ANNEX A3 OF TPI1-2002 SEC.3. A SEAL ON THIS DRAWING INDICATES ACCEPTANCE OF PROFESSIONAL ENGINEERING RESPONSIBILITY SOLELY FOR THE TRUSS COMPONENT DESIGN SHOWN. THE SUITABILITY AND USE OF THIS COMPONENT FOR ANY BUILDING IS THE RESPONSIBILITY OF THE BUILDING DESIGNER PER ANSI/TPI 1 SEC. 2.

DOUGLAS FLEMING LICENSE No. 66648 STATE OF FLORIDA PROFESSIONAL ENGINEER
10/14/2010

TC LL	20.0 PSF	REF R487-- 3271
TC DL	10.0 PSF	DATE 10/14/10
BC DL	10.0 PSF	DRW HCUSR487 10287042
BC LL	0.0 PSF	HC-ENG KD/DF
TOT.LD.	40.0 PSF	SEQN- 151071
DUR.FAC.	1.25	FROM AH
SPACING	24.0"	JREF- 1U61487_Z01

(9-244--Fill in later EDGLEY -- , ** - H11B)

Top chord 2x4 SP #2 Dense
Bot chord 2x4 SP #2 Dense
Webs 2x4 SP #3

Roof overhang supports 2.00 psf soffit load.

In lieu of structural panels use purlins to brace all flat TC @ 24" OC.

Bottom chord checked for 10.00 psf non-concurrent live load.

MWFRS loads based on trusses located at least 15.00 ft. from roof edge.

110 mph wind, 15.00 ft mean hgt, ASCE 7-05, CLOSED bldg, not located within 4.50 ft from roof edge, CAT II, EXP C, wind TC DL=5.0 psf, wind BC DL=5.0 psf. Iw=1.00 GCpi(+/-)=0.18

Wind reactions based on MWFRS pressures.

Truss passed check for 20 psf additional bottom chord live load in areas with 42"-high x 24"-wide clearance.

Deflection meets L/240 live and L/180 total load.

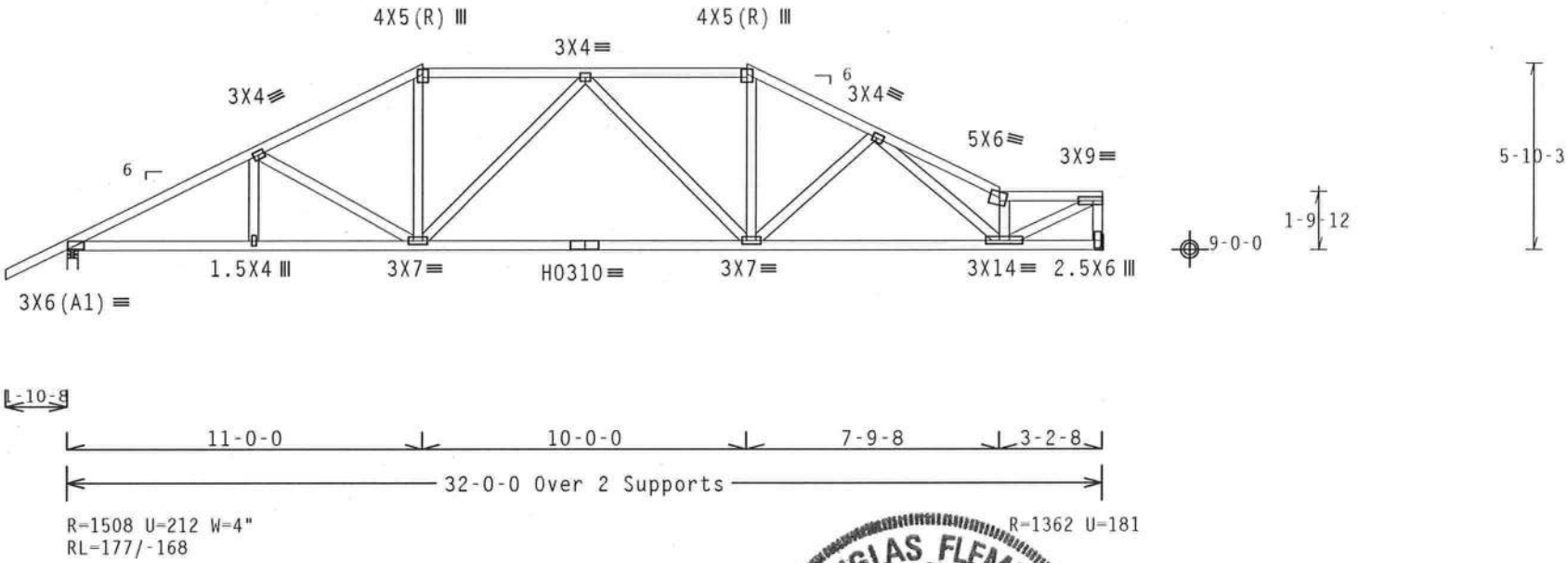

Design Crit: FBC2007Res/TPI-2002(STD)

PLT TYP. 20 Gauge HS,Wave FT/RT=20%(0%)/0(0) 9.02.03.0610.16 QTY 1 FL/-/4/-/-/R/- Scale =.1875"/Ft.

ALPINE
ITW Building Components Group Inc.
Haines City, FL 33844
FL COA #0 278

WARNING TRUSSES REQUIRE EXTREME CARE IN FABRICATION, HANDLING, SHIPPING, INSTALLING AND BRACING. REFER TO BCSI (BUILDING COMPONENT SAFETY INFORMATION), PUBLISHED BY TPI (TRUSS PLATE INSTITUTE, 218 NORTH LEE STREET, SUITE 312, ALEXANDRIA, VA. 22314) AND WTCA (WOOD TRUSS COUNCIL OF AMERICA, 6300 ENTERPRISE LANE, MADISON, WI 53719) FOR SAFETY PRACTICES PRIOR TO PERFORMING THESE FUNCTIONS. UNLESS OTHERWISE INDICATED TOP CHORD SHALL HAVE PROPERLY ATTACHED STRUCTURAL PANELS AND BOTTOM CHORD SHALL HAVE A PROPERLY ATTACHED RIGID CEILING.

IMPORTANTFURNISH A COPY OF THIS DESIGN TO THE INSTALLATION CONTRACTOR. ITW BCG, INC. SHALL NOT BE RESPONSIBLE FOR ANY DEVIATION FROM THIS DESIGN; ANY FAILURE TO BUILD THE TRUSS IN CONFORMANCE WITH TPI; OR FABRICATING, HANDLING, SHIPPING, INSTALLING & BRACING OF TRUSSES. DESIGN CONFORMS WITH APPLICABLE PROVISIONS OF NDS (NATIONAL DESIGN SPEC. BY AF&PA) AND TPI. ITW BCG CONNECTOR PLATES ARE MADE OF 20/18/16GA (W,H/SS/K) ASTM A653 GRADE 40/60 (W, K/H,SS) GALV. STEEL. APPLY PLATES TO EACH FACE OF TRUSS AND, UNLESS OTHERWISE LOCATED ON THIS DESIGN, POSITION PER DRAWINGS 1603. ANY INSPECTION OF PLATES FOLLOWED BY (1) SHALL BE PER ANNEX A3 OF TPI1-2002 SEC.3. A SEAL ON THIS DRAWING INDICATES ACCEPTANCE OF PROFESSIONAL ENGINEERING RESPONSIBILITY SOLELY FOR THE TRUSS COMPONENT DESIGN SHOWN. THE SUITABILITY AND USE OF THIS COMPONENT FOR ANY BUILDING IS THE RESPONSIBILITY OF THE BUILDING DESIGNER PER ANSI/TPI 1 SEC. 2.

DOUGLAS FLEMING LICENSE No. 66648 STATE OF FLORIDA PROFESSIONAL ENGINEER
10/14/2010

TC LL	20.0 PSF	REF	R487-- 3272
TC DL	10.0 PSF	DATE	10/14/10
BC DL	10.0 PSF	DRW	HCUSR487 10287043
BC LL	0.0 PSF	HC-ENG	TCE/DF
TOT.LD.	40.0 PSF	SEQN-	72866
DUR.FAC.	1.25	FROM	AH
SPACING	24.0"	JREF-	1U61487_Z01

(9-244--Fill in later EDGLEY -- , ** - BH1)

Top chord 2x4 SP #2 Dense
Bot chord 2x4 SP #2 Dense
Webs 2x4 SP #3

Roof overhang supports 2.00 psf soffit load.

In lieu of structural panels use purlins to brace all flat TC @ 24" OC.

Bottom chord checked for 10.00 psf non-concurrent live load.

MWFRS loads based on trusses located at least 15.00 ft. from roof edge.

110 mph wind, 15.00 ft mean hgt, ASCE 7-05, CLOSED bldg, not located within 4.50 ft from roof edge, CAT II, EXP C, wind TC DL=5.0 psf, wind BC DL=5.0 psf. Iw=1.00 GCpi(+/-)=0.18

Wind reactions based on MWFRS pressures.

Truss passed check for 20 psf additional bottom chord live load in areas with 42"-high x 24"-wide clearance.

Deflection meets L/240 live and L/180 total load.

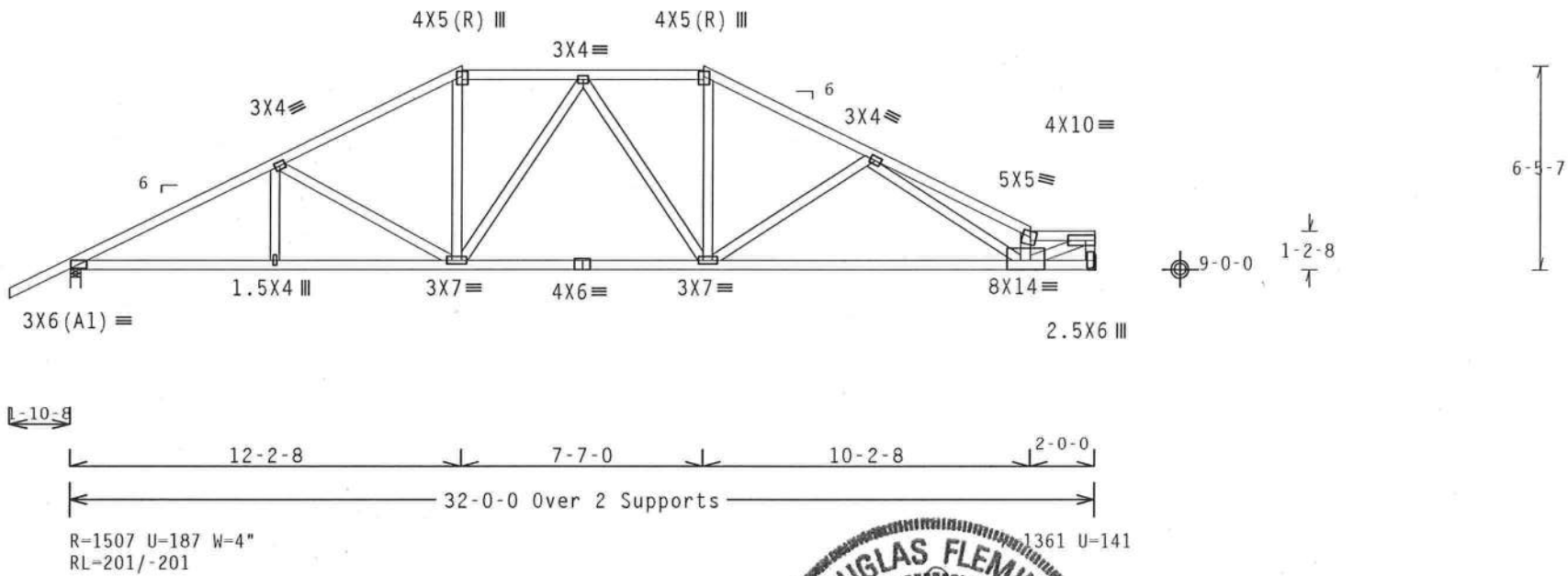

Design Crit: FBC2007Res/TPI-2002(STD)

PLT TYP. Wave | FT/RT=20%(0%)/0(0) | 9.02.03.0610.16 | QTY: | FL/-/4/-/-/R/- | Scale =.1875"/Ft.

ALPINE
ITW Building Components Group Inc.
Haines City, FL 33844
FL COA #0 278

WARNING TRUSSES REQUIRE EXTREME CARE IN FABRICATION, HANDLING, SHIPPING, INSTALLING AND BRACING. REFER TO BCSI (BUILDING COMPONENT SAFETY INFORMATION), PUBLISHED BY TPI (TRUSS PLATE INSTITUTE, 218 NORTH LEE STREET, SUITE 312, ALEXANDRIA, VA, 22314) AND WTCA (WOOD TRUSS COUNCIL OF AMERICA, 6300 ENTERPRISE LANE, MADISON, WI 53719) FOR SAFETY PRACTICES PRIOR TO PERFORMING THESE FUNCTIONS. UNLESS OTHERWISE INDICATED TOP CHORD SHALL HAVE PROPERLY ATTACHED STRUCTURAL PANELS AND BOTTOM CHORD SHALL HAVE A PROPERLY ATTACHED RIGID CEILING.

IMPORTANTFURNISH A COPY OF THIS DESIGN TO THE INSTALLATION CONTRACTOR. ITW BCG, INC. SHALL NOT BE RESPONSIBLE FOR ANY DEVIATION FROM THIS DESIGN; ANY FAILURE TO BUILD THE TRUSS IN CONFORMANCE WITH TPI; OR FABRICATING, HANDLING, SHIPPING, INSTALLING & BRACING OF TRUSSES.
DESIGN CONFORMS WITH APPLICABLE PROVISIONS OF NDS (NATIONAL DESIGN SPEC, BY AF&PA) AND TPI. ITW BCG CONNECTOR PLATES ARE MADE OF 20/18/16GA (W,H/SS/K) ASTM A653 GRADE 40/60 (W, K/H,SS) GALV. STEEL. APPLY PLATES TO EACH FACE OF TRUSS AND, UNLESS OTHERWISE LOCATED ON THIS DESIGN, POSITION PER DRAWINGS 160A-2. ANY INSPECTION OF PLATES FOLLOWED BY (1) SHALL BE PER ANNEX A3 OF TPI1-2002 SEC.3. A SEAL ON THIS DRAWING INDICATES ACCEPTANCE OF PROFESSIONAL ENGINEERING RESPONSIBILITY SOLELY FOR THE TRUSS COMPONENT DESIGN SHOWN. THE SUITABILITY AND USE OF THIS COMPONENT FOR ANY BUILDING IS THE RESPONSIBILITY OF THE BUILDING DESIGNER PER ANSI/TPI 1 SEC. 2.

DOUGLAS FLEMING LICENSE No. 66648 STATE OF FLORIDA PROFESSIONAL ENGINEER
10/14/2010

TC LL	20.0 PSF	REF R487-- 3273
TC DL	10.0 PSF	DATE 10/14/10
BC DL	10.0 PSF	DRW HCUSR487 10287059
BC LL	0.0 PSF	HC-ENG TCE/DF
TOT.LD.	40.0 PSF	SEQN- 72875
DUR.FAC.	1.25	FROM AH
SPACING	24.0"	JREF- 1U61487_Z01

(9-244--Fill in later EDGLEY -- , ** - BH2)

Top chord 2x4 SP #2 Dense
Bot chord 2x4 SP #2 Dense
Webs 2x4 SP #3

110 mph wind, 15.00 ft mean hgt, ASCE 7-05, CLOSED bldg, not located within 4.50 ft from roof edge, CAT II, EXP C, wind TC DL=5.0 psf, wind BC DL=5.0 psf. Iw=1.00 GCpi(+/-)=0.18

Max JT VERT DEFL: LL: 0.19" DL: 0.20" recommended camber 3/8"

Bottom chord checked for 10.00 psf non-concurrent live load.

MWFRS loads based on trusses located at least 15.00 ft. from roof edge.

(I) - plates so marked were sized using a Fabrication Tolerance of 0% and a Rotational Tolerance of 0 degrees.

(**) 2 plate(s) require special positioning. Refer to scaled plate plot details for special positioning requirements.

Wind reactions based on MWFRS pressures.

In lieu of structural panels use purlins to brace all flat TC @ 24" OC.

Deflection meets L/240 live and L/180 total load.

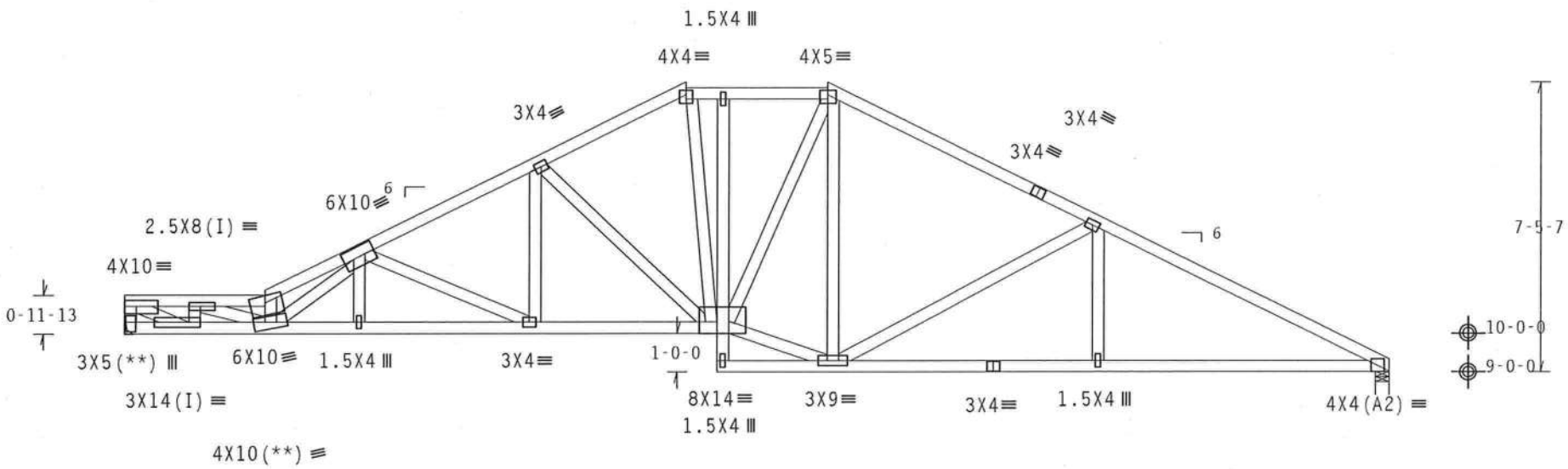

R=1312 U=125
RL=178/-204

R=1324 U=131 W=4"

Design Crit: FBC2007Res/TPI-2002(STD)

PLT TYP. Wave FT/RT=20%(0%)/0(0) 09.02.03.0610.16 QTY: 1 FL/-/4/-/-/R/- Scale =.25"/Ft.

ALPINE
ITW Building Components Group Inc.
Haines City, FL 33844
FL COA #0 278

WARNING TRUSSES REQUIRE EXTREME CARE IN FABRICATION, HANDLING, SHIPPING, INSTALLING AND BRACING. REFER TO BCSI (BUILDING COMPONENT SAFETY INFORMATION), PUBLISHED BY TPI (TRUSS PLATE INSTITUTE, 218 NORTH LEE STREET, SUITE 312, ALEXANDRIA, VA, 22314) AND WTCA (WOOD TRUSS COUNCIL OF AMERICA, 6300 ENTERPRISE LANE, MADISON, WI 53719) FOR SAFETY PRACTICES PRIOR TO PERFORMING THESE FUNCTIONS. UNLESS OTHERWISE INDICATED TOP CHORD SHALL HAVE PROPERLY ATTACHED STRUCTURAL PANELS AND BOTTOM CHORD SHALL HAVE A PROPERLY ATTACHED RIGID CEILING.

IMPORTANTFURNISH A COPY OF THIS DESIGN TO THE INSTALLATION CONTRACTOR. ITW BCG, INC. SHALL NOT BE RESPONSIBLE FOR ANY DEVIATION FROM THIS DESIGN; ANY FAILURE TO BUILD THE TRUSS IN CONFORMANCE WITH TPI; OR FABRICATING, HANDLING, SHIPPING, INSTALLING & BRACING OF TRUSSES. DESIGN CONFORMS WITH APPLICABLE PROVISIONS OF NDS (NATIONAL DESIGN SPEC, BY AF&PA) AND TPI. ITW BCG CONNECTOR PLATES ARE MADE OF 20/18/16GA (W,H/SS/K) ASTM A653 GRADE 40/60 (W, K/H,SS) GALV. STEEL. APPLY PLATES TO EACH FACE OF TRUSS AND, UNLESS OTHERWISE LOCATED ON THIS DESIGN, POSITION PER DRAWINGS 160A-Z. ANY INSPECTION OF PLATES FOLLOWED BY (I) SHALL BE PER ANNEX A3 OF TPI1-2002 SEC.3. A SEAL ON THIS DRAWING INDICATES ACCEPTANCE OF PROFESSIONAL ENGINEERING RESPONSIBILITY SOLELY FOR THE TRUSS COMPONENT DESIGN SHOWN. THE SUITABILITY AND USE OF THIS COMPONENT FOR ANY BUILDING IS THE RESPONSIBILITY OF THE BUILDING DESIGNER PER ANSI/TPI 1 SEC. 2.

DOUGLAS FLEMING LICENSE No. 66648 STATE OF FLORIDA PROFESSIONAL ENGINEER
10/14/2010

TC LL	20.0 PSF	REF R487-- 3274
TC DL	10.0 PSF	DATE 10/14/10
BC DL	10.0 PSF	DRW HCUSR487 10287065
BC LL	0.0 PSF	HC-ENG TCE/DF
TOT.LD.	40.0 PSF	SEQN- 72889
DUR.FAC.	1.25	
SPACING	24.0"	JREF- 1U61487_Z01

(9-244--Fill in later EDGLEY -- , ** - BH3)

THIS DWG PREPARED FROM COMPUTER INPUT (LOADS & DIMENSIONS) SUBMITTED BY TRUSS MFR.

Top chord 2x4 SP #2 Dense
Bot chord 2x4 SP #2 Dense
Webs 2x4 SP #3 :W2 2x4 SP #2 Dense:

Roof overhang supports 2.00 psf soffit load.

Max JT VERT DEFL: LL: 0.19" DL: 0.20" recommended camber 3/8"

Bottom chord checked for 10.00 psf non-concurrent live load.

MWFRS loads based on trusses located at least 15.00 ft. from roof edge.

110 mph wind, 15.00 ft mean hgt, ASCE 7-05, CLOSED bldg, not located within 4.50 ft from roof edge, CAT II, EXP C, wind TC DL=5.0 psf, wind BC DL=5.0 psf. Iw=1.00 GCpi(+/-)=0.18

Wind reactions based on MWFRS pressures.

In lieu of structural panels use purlins to brace all flat TC @ 24" OC.

Deflection meets L/240 live and L/180 total load.

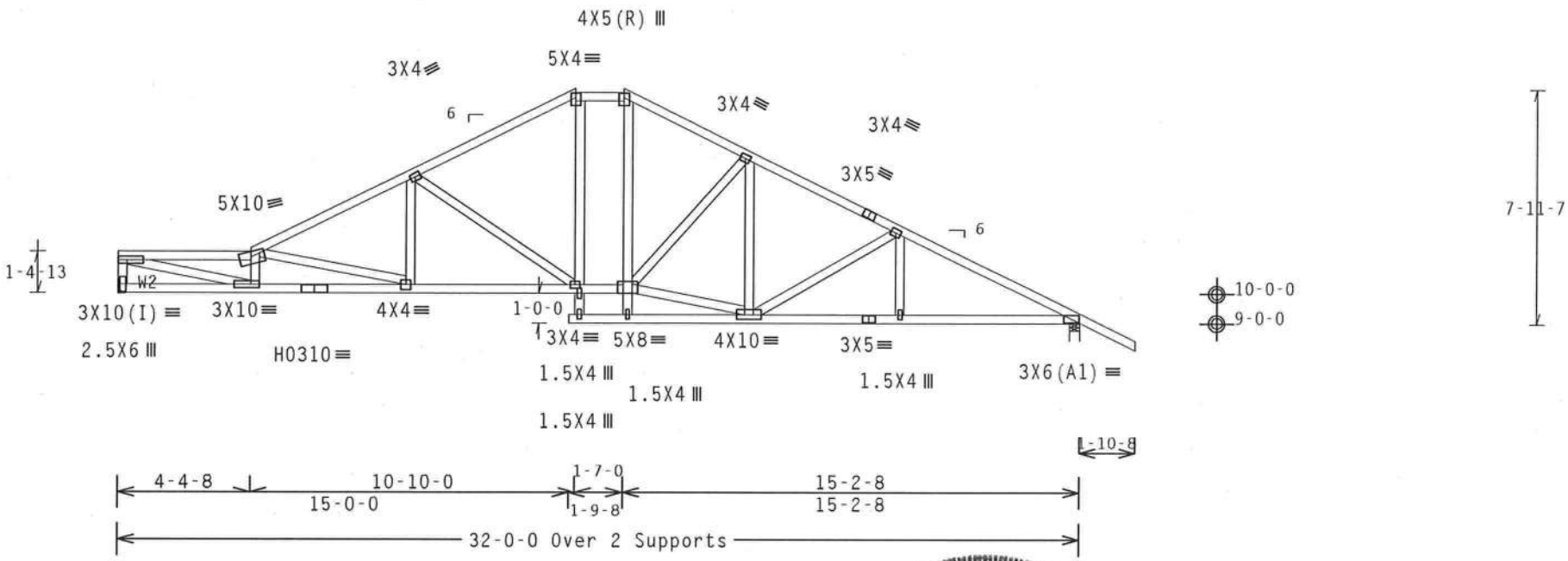

Design Crit: FBC2007Res/TPI-2002(STD)

PLT TYP. 20 Gauge HS,Wave FT/RT=20%(0%)/0(0) 9.02.03.0610.16 QTY: FL/-/4/-/-/R/- Scale =.1875"/Ft.

ALPINE
ITW Building Components Group Inc.
Haines City, FL 33844
FL COA #0 278

WARNING TRUSSES REQUIRE EXTREME CARE IN FABRICATION, HANDLING, SHIPPING, INSTALLING AND BRACING. REFER TO BCSI (BUILDING COMPONENT SAFETY INFORMATION), PUBLISHED BY TPI (TRUSS PLATE INSTITUTE, 218 NORTH LEE STREET, SUITE 312, ALEXANDRIA, VA. 22314) AND WTCA (WOOD TRUSS COUNCIL OF AMERICA, 6300 ENTERPRISE LANE, MADISON, WI 53719) FOR SAFETY PRACTICES PRIOR TO PERFORMING THESE FUNCTIONS. UNLESS OTHERWISE INDICATED TOP CHORD SHALL HAVE PROPERLY ATTACHED STRUCTURAL PANELS AND BOTTOM CHORD SHALL HAVE A PROPERLY ATTACHED RIGID CEILING.

IMPORTANTFURNISH A COPY OF THIS DESIGN TO THE INSTALLATION CONTRACTOR. ITW BCG, INC. SHALL NOT BE RESPONSIBLE FOR ANY DEVIATION FROM THIS DESIGN; ANY FAILURE TO BUILD THE TRUSS IN CONFORMANCE WITH TPI; OR FABRICATING, HANDLING, SHIPPING, INSTALLING & BRACING OF TRUSSES. DESIGN CONFORMS WITH APPLICABLE PROVISIONS OF NDS (NATIONAL DESIGN SPEC, BY AF&PA) AND TPI. ITW BCG CONNECTOR PLATES ARE MADE OF 20/18/16GA (H,H/SS/K) ASTM A653 GRADE 40/60 (H, K/H,SS) GALV. STEEL. APPLY PLATES TO EACH FACE OF TRUSS AND, UNLESS OTHERWISE LOCATED ON THIS DESIGN, POSITION PER DRAWINGS 160A-Z. ANY INSPECTION OF PLATES FOLLOWED BY (1) SHALL BE PER ANNEX A3 OF TPI1-2002 SEC.3. A SEAL ON THIS DRAWING INDICATES ACCEPTANCE OF PROFESSIONAL ENGINEERING RESPONSIBILITY SOLELY FOR THE TRUSS COMPONENT DESIGN SHOWN. THE SUITABILITY AND USE OF THIS COMPONENT FOR ANY BUILDING IS THE RESPONSIBILITY OF THE BUILDING DESIGNER PER ANSI/TPI 1 SEC. 2.

DOUGLAS FLEMING LICENSE No. 66648 STATE OF FLORIDA PROFESSIONAL ENGINEER
10/14/2010

TC LL	20.0 PSF	REF R487-- 3275
TC DL	10.0 PSF	DATE 10/14/10
BC DL	10.0 PSF	DRW HCUSR487 10287041
BC LL	0.0 PSF	HC-ENG TCE/DF
TOT.LD.	40.0 PSF	SEQN- 72900
DUR.FAC.	1.25	
SPACING	24.0"	JREF- 1U61487_Z01

(9-244--Fill in later EDGLEY -- , ** - B1)

THIS DWG PREPARED FROM COMPUTER INPUT (LOADS & DIMENSIONS) SUBMITTED BY TRUSS MFR.

Top chord 2x4 SP #2 Dense
Bot chord 2x4 SP #2 Dense
Webs 2x4 SP #3

Left end vertical not exposed to wind pressure.

Roof overhang supports 2.00 psf soffit load.

(A) #3 or better scab brace. Same size & 80% length of web member. Attach with 10d Box or Gun (0.128"x3",min.)nails @ 6" OC.

Bottom chord checked for 10.00 psf non-concurrent live load.

MWFRS loads based on trusses located at least 15.00 ft. from roof edge.

110 mph wind, 15.00 ft mean hgt, ASCE 7-05, CLOSED bldg, not located within 4.50 ft from roof edge, CAT II, EXP C, wind TC DL=5.0 psf, wind BC DL=5.0 psf. Iw=1.00 GCpi(+/-)=0.18

Wind reactions based on MWFRS pressures.

Max JT VERT DEFL: LL: 0.17" DL: 0.18" recommended camber 3/8"

In lieu of structural panels use purlins to brace all flat TC @ 24" OC.

Deflection meets L/240 live and L/180 total load.

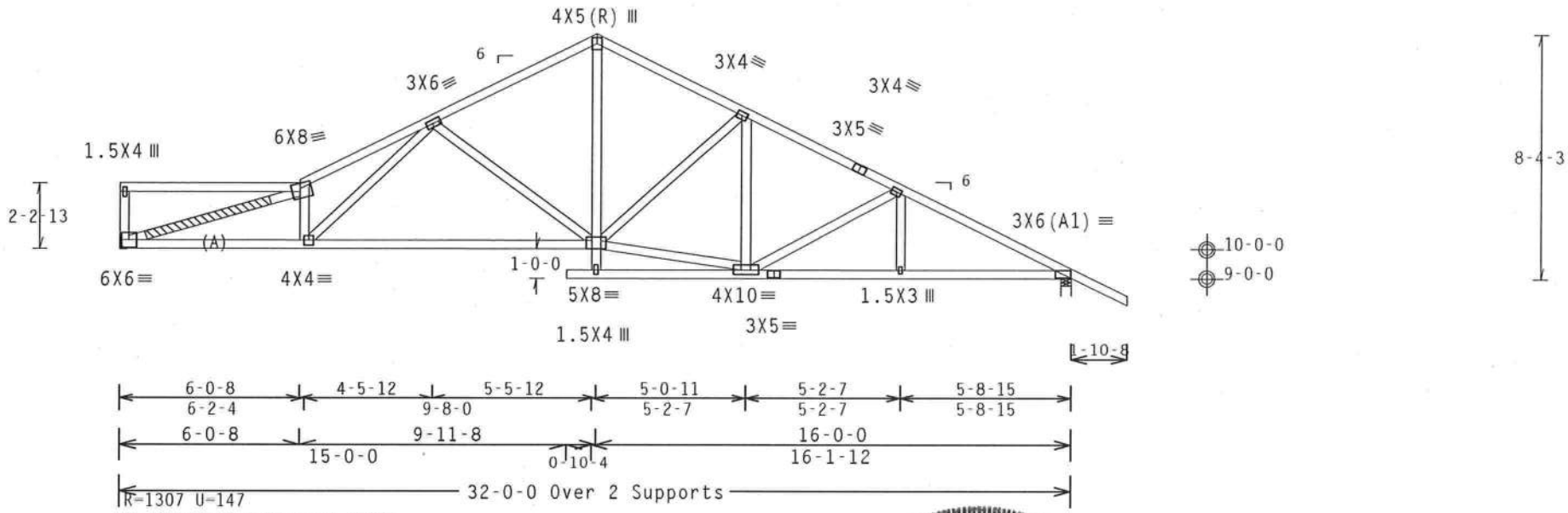

R=1307 U=147
RL=214/-243 H=Simpson HUS26
w/ (4) 10d Common, 0.148"x3.0" nails in Truss
w/ (14) 10d Common, 0.148"x3.0" nails in Girder
Supporting Member is (2)2x6 SP #2

Design Crit: FBC2007Res/TPI-2002(STD)

PLT TYP. Wave FT/RT=20%(0%)/0(0) 9.05.03.0319.17 QTY: 1 FL/-/4/-/-/R/- Scale =.1875"/Ft.

DOUGLAS FLEMING LICENSE No. 66648 STATE OF FLORIDA PROFESSIONAL ENGINEER

10/14/2010

ALPINE
ITW Building Components Group Inc.
Haines City, FL 33844
FL COA #0 278

WARNING TRUSSES REQUIRE EXTREME CARE IN FABRICATION, HANDLING, SHIPPING, INSTALLING AND BRACING. REFER TO BCSI (BUILDING COMPONENT SAFETY INFORMATION), PUBLISHED BY TPI (TRUSS PLATE INSTITUTE, 218 NORTH LEE STREET, SUITE 312, ALEXANDRIA, VA. 22314) AND WTCA (WOOD TRUSS COUNCIL OF AMERICA, 6300 ENTERPRISE LANE, MADISON, WI 53719) FOR SAFETY PRACTICES PRIOR TO PERFORMING THESE FUNCTIONS. UNLESS OTHERWISE INDICATED TOP CHORD SHALL HAVE PROPERLY ATTACHED STRUCTURAL PANELS AND BOTTOM CHORD SHALL HAVE A PROPERLY ATTACHED RIGID CEILING.

IMPORTANTFURNISH A COPY OF THIS DESIGN TO THE INSTALLATION CONTRACTOR. ITW BCG, INC. SHALL NOT BE RESPONSIBLE FOR ANY DEVIATION FROM THIS DESIGN; ANY FAILURE TO BUILD THE TRUSS IN CONFORMANCE WITH TPI; OR FABRICATING, HANDLING, SHIPPING, INSTALLING & BRACING OF TRUSSES. DESIGN CONFORMS WITH APPLICABLE PROVISIONS OF NDS (NATIONAL DESIGN SPEC. BY AF&PA) AND TPI. ITW BCG CONNECTOR PLATES ARE MADE OF 20/18/16GA (H,M/SS/H) ASTM A653 GRADE 40/60 (H, K/H,SS) GALV. STEEL. APPLY PLATES TO EACH FACE OF TRUSS AND, UNLESS OTHERWISE LOCATED ON THIS DESIGN, POSITION PER DRAWINGS 160A-Z. ANY INSPECTION OF PLATES FOLLOWED BY (1) SHALL BE PER ANNEX A3 OF TPI1-2002 SEC.3. A SEAL ON THIS DRAWING INDICATES ACCEPTANCE OF PROFESSIONAL ENGINEERING RESPONSIBILITY SOLELY FOR THE TRUSS COMPONENT DESIGN SHOWN. THE SUITABILITY AND USE OF THIS COMPONENT FOR ANY BUILDING IS THE RESPONSIBILITY OF THE BUILDING DESIGNER PER ANSI/TPI 1 SEC. 2.

TC LL	20.0 PSF	REF	R487-- 3276
TC DL	10.0 PSF	DATE	10/14/10
BC DL	10.0 PSF	DRW	HCUSR487 10287066
BC LL	0.0 PSF	HC-ENG	KD/DF
TOT.LD.	40.0 PSF	SEQN-	151078
DUR.FAC.	1.25		
SPACING	24.0"	JREF-	1U61487_Z01

(9-244--Fill in later EDGLEY -- , ** - B2)

THIS DWG PREPARED FROM COMPUTER INPUT (LOADS & DIMENSIONS) SUBMITTED BY TRUSS MFR.

Top chord 2x4 SP #2 Dense
Bot chord 2x4 SP #2 Dense
Webs 2x4 SP #3

Left end vertical not exposed to wind pressure.

Roof overhang supports 2.00 psf soffit load.

Bottom chord checked for 10.00 psf non-concurrent live load.

MWFRS loads based on trusses located at least 15.00 ft. from roof edge.

110 mph wind, 15.00 ft mean hgt, ASCE 7-05, CLOSED bldg, not located within 4.50 ft from roof edge, CAT II, EXP C, wind TC DL=5.0 psf, wind BC DL=5.0 psf. Iw=1.00 GCpi(+/-)=0.18

Wind reactions based on MWFRS pressures.

In lieu of structural panels use purlins to brace all flat TC @ 24" OC.

Deflection meets L/240 live and L/180 total load.

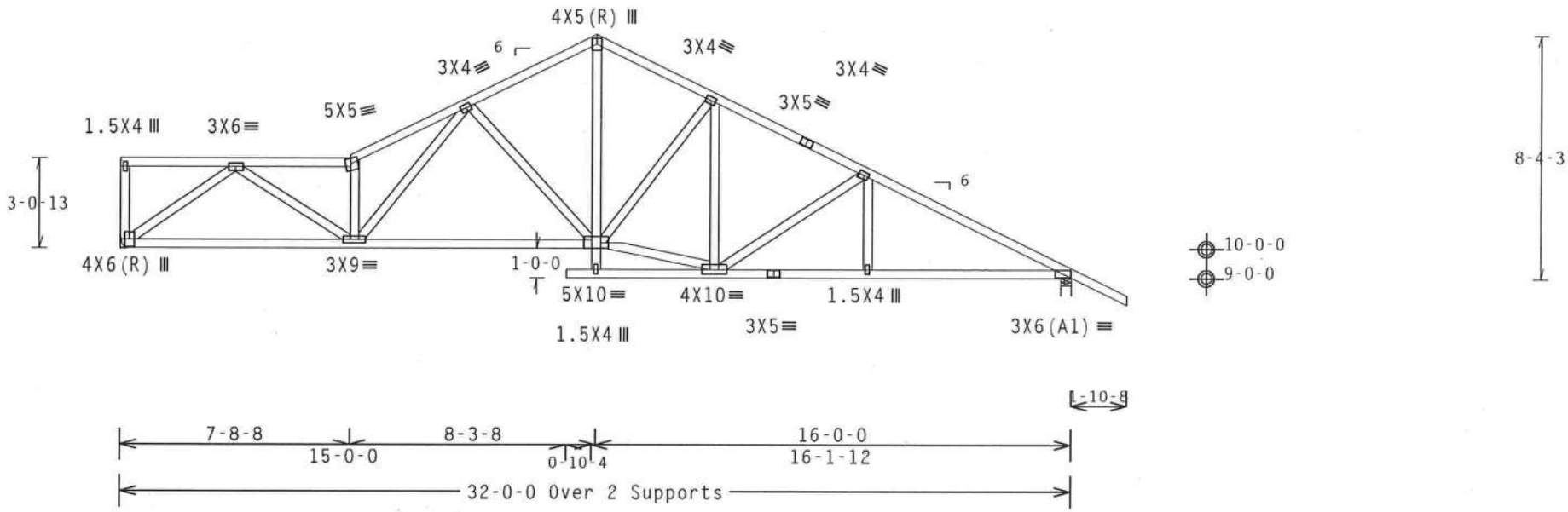

Design Crit: FBC2007Res/TPI-2002(STD)

PLT TYP. Wave

FT/RT=20%(0%)/0(0)

9.0.03.0610.16

QTY 1

FL/-/4/-/-/R/-

Scale =.1875"/Ft.

ALPINE
ITW Building Components Group Inc.
Haines City, FL 33844
FL COA #0 278

WARNING TRUSSES REQUIRE EXTREME CARE IN FABRICATION, HANDLING, SHIPPING, INSTALLING AND BRACING. REFER TO BCSI (BUILDING COMPONENT SAFETY INFORMATION), PUBLISHED BY TPI (TRUSS PLATE INSTITUTE, 218 NORTH LEE STREET, SUITE 312, ALEXANDRIA, VA. 22314) AND WTCA (WOOD TRUSS COUNCIL OF AMERICA, 6300 ENTERPRISE LANE, MADISON, WI 53719) FOR SAFETY PRACTICES PRIOR TO PERFORMING THESE FUNCTIONS. UNLESS OTHERWISE INDICATED TOP CHORD SHALL HAVE PROPERLY ATTACHED STRUCTURAL PANELS AND BOTTOM CHORD SHALL HAVE A PROPERLY ATTACHED RIGID CEILING.

IMPORTANTFURNISH A COPY OF THIS DESIGN TO THE INSTALLATION CONTRACTOR. ITW BCG, INC. SHALL NOT BE RESPONSIBLE FOR ANY DEVIATION FROM THIS DESIGN; ANY FAILURE TO BUILD THE TRUSS IN CONFORMANCE WITH TPI; OR FABRICATING, HANDLING, SHIPPING, INSTALLING & BRACING OF TRUSSES. DESIGN CONFORMS WITH APPLICABLE PROVISIONS OF NDS (NATIONAL DESIGN SPEC, BY AF&PA) AND TPI. CONNECTOR PLATES ARE MADE OF 20/18/16GA (W,H/SS/K) ASTM A653 GRADE 40/60 (W, K/H,SS) GALV. STEEL. APPLY PLATES TO EACH FACE OF TRUSS AND, UNLESS OTHERWISE LOCATED ON THIS DESIGN, POSITION PER DRAWINGS 160-1. ANY INSPECTION OF PLATES FOLLOWED BY (1) SHALL BE PER ANNEX A3 OF TPI1-2002 SEC.3. A SEAL ON THIS DRAWING INDICATES ACCEPTANCE OF PROFESSIONAL ENGINEERING RESPONSIBILITY SOLELY FOR THE TRUSS COMPONENT DESIGN SHOWN. THE SUITABILITY AND USE OF THIS COMPONENT FOR ANY BUILDING IS THE RESPONSIBILITY OF THE BUILDING DESIGNER PER ANSI/TPI 1 SEC. 2.

DOUGLAS FLEMING LICENSE No. 66648 STATE OF FLORIDA PROFESSIONAL ENGINEER

10/14/2010

TC LL	20.0 PSF	REF	R487-- 3277
TC DL	10.0 PSF	DATE	10/14/10
BC DL	10.0 PSF	DRW	HCUSR487 10287062
BC LL	0.0 PSF	HC-ENG	TCE/DF
TOT.LD.	40.0 PSF	SEQN-	72924
DUR.FAC.	1.25	FROM	AH
SPACING	24.0"	JREF-	1U61487_Z01

(9-244--Fill in later EDGLEY -- , ** - B3)

THIS DWG PREPARED FROM COMPUTER INPUT (LOADS & DIMENSIONS) SUBMITTED BY TRUSS MFR.

Top chord 2x4 SP #2 Dense
Bot chord 2x4 SP #2 Dense :B3 2x6 SP #2:
Webs 2x4 SP #3

Left end vertical not exposed to wind pressure.

In lieu of structural panels use purlins to brace all flat TC @ 24" OC.

Deflection meets L/240 live and L/180 total load.

110 mph wind, 15.00 ft mean hgt, ASCE 7-05, CLOSED bldg, not located within 4.50 ft from roof edge, CAT II, EXP C, wind TC DL=5.0 psf, wind BC DL=5.0 psf. Iw=1.00 GCpi(+/-)=0.18

Wind reactions based on MWFRS pressures.

Bottom chord checked for 10.00 psf non-concurrent live load.

MWFRS loads based on trusses located at least 15.00 ft. from roof edge.

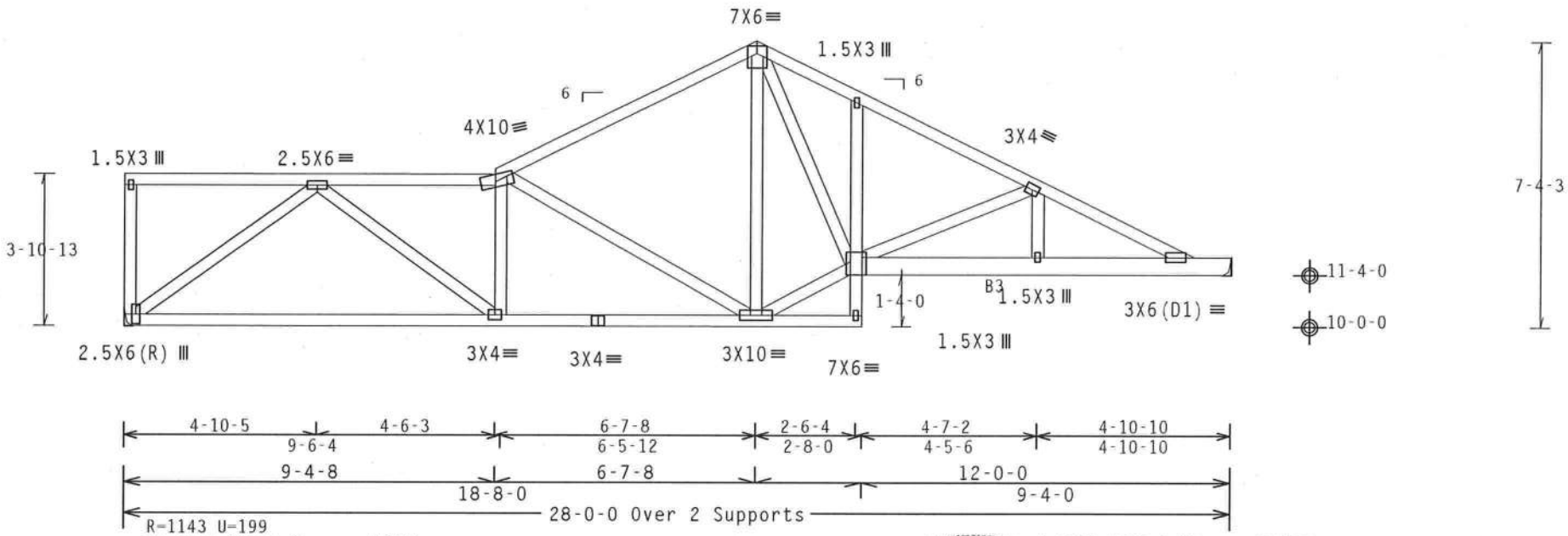

R=1143 U=199
RL=116/-150 H=Simpson LUS26
w/ (4) 10d Common, 0.148"x3.0" nails in Truss
w/ (4) 10d Common, 0.148"x3.0" nails in Girder
Supporting Member is (2)2x6 SP #2

R=1161 U=91 H=Simpson HUS26
w/ (4) 10d Common, 0.148"x3.0" nails in Truss
w/ (4) 10d, 0.148"x1.5" nails in Girder
Supporting Member is (1)2x6 SP #2

Design Crit: FBC2007Res/TPI-2002(STD)

PLT TYP. Wave FT/RT=20%(0%)/0(0) 9.05.03.0319.17 QTY: 8 FL/-/4/-/-/R/- Scale =.25"/Ft.

ALPINE
ITW Building Components Group Inc.
Haines City, FL 33844
FL COA #0 278

WARNING TRUSSES REQUIRE EXTREME CARE IN FABRICATION, HANDLING, SHIPPING, INSTALLING AND BRACING. REFER TO BCSI (BUILDING COMPONENT SAFETY INFORMATION), PUBLISHED BY TPI (TRUSS PLATE INSTITUTE, 218 NORTH LEE STREET, SUITE 312, ALEXANDRIA, VA. 22314) AND WTCA (WOOD TRUSS COUNCIL OF AMERICA, 6300 ENTERPRISE LANE, MADISON, WI 53719) FOR SAFETY PRACTICES PRIOR TO PERFORMING THESE FUNCTIONS. UNLESS OTHERWISE INDICATED TOP CHORD SHALL HAVE PROPERLY ATTACHED STRUCTURAL PANELS AND BOTTOM CHORD SHALL HAVE A PROPERLY ATTACHED RIGID CEILING.

IMPORTANTFURNISH A COPY OF THIS DESIGN TO THE INSTALLATION CONTRACTOR. ITW BCG, INC. SHALL NOT BE RESPONSIBLE FOR ANY DEVIATION FROM THIS DESIGN; ANY FAILURE TO BUILD THE TRUSS IN CONFORMANCE WITH TPI; OR FABRICATING, HANDLING, SHIPPING, INSTALLING & BRACING OF TRUSSES.
DESIGN CONFORMS WITH APPLICABLE PROVISIONS OF NDS (NATIONAL DESIGN SPEC, BY AF&PA) AND TPI. ITW BCG CONNECTOR PLATES ARE MADE OF 20/18/16GA (W,H/SS/K) ASTM A653 GRADE 40/60 (W, K/H,SS) GALV. STEEL. APPLY PLATES TO EACH FACE OF TRUSS AND, UNLESS OTHERWISE LOCATED ON THIS DESIGN, POSITION PER DRAWINGS 160A. ANY INSPECTION OF PLATES FOLLOWED BY (1) SHALL BE PER ANNEX A3 OF TPI1-2002 SEC.3. A SEAL ON THIS DRAWING INDICATES ACCEPTANCE OF PROFESSIONAL ENGINEERING RESPONSIBILITY SOLELY FOR THE TRUSS COMPONENT DESIGN SHOWN. THE SUITABILITY AND USE OF THIS COMPONENT FOR ANY BUILDING IS THE RESPONSIBILITY OF THE BUILDING DESIGNER PER ANSI/TPI 1 SEC. 2.

DOUGLAS FLEMING LICENSE No. 66648 STATE OF FLORIDA PROFESSIONAL ENGINEER
10/14/2010

TC LL	20.0 PSF	REF	R487-- 3278
TC DL	10.0 PSF	DATE	10/14/10
BC DL	10.0 PSF	DRW	HCUSR487 10287061
BC LL	0.0 PSF	HC-ENG	KD/DF
TOT.LD.	40.0 PSF	SEQN-	151018
DUR.FAC.	1.25	FROM	AH
SPACING	24.0"	JREF-	1U61487_Z01

(9-244--Fill in later EDGLEY -- , ** - B4)

THIS DWG PREPARED FROM COMPUTER INPUT (LOADS & DIMENSIONS) SUBMITTED BY TRUSS MFR.

Top chord 2x4 SP #2 Dense
Bot chord 2x4 SP #2 Dense
Webs 2x4 SP #3

Left end vertical not exposed to wind pressure.

(A) #3 or better scab brace. Same size & 80% length of web member. Attach with 10d Box or Gun (0.128"x3",min.)nails @ 6" OC.

Bottom chord checked for 10.00 psf non-concurrent live load.

MWFRS loads based on trusses located at least 15.25 ft. from roof edge.

110 mph wind, 15.25 ft mean hgt, ASCE 7-05, CLOSED bldg, not located within 4.50 ft from roof edge, CAT II, EXP C, wind TC DL=5.0 psf, wind BC DL=5.0 psf. Iw=1.00 GCpi(+/-)=0.18

Wind reactions based on MWFRS pressures.

In lieu of structural panels use purlins to brace all flat TC @ 24" OC.

Deflection meets L/240 live and L/180 total load.

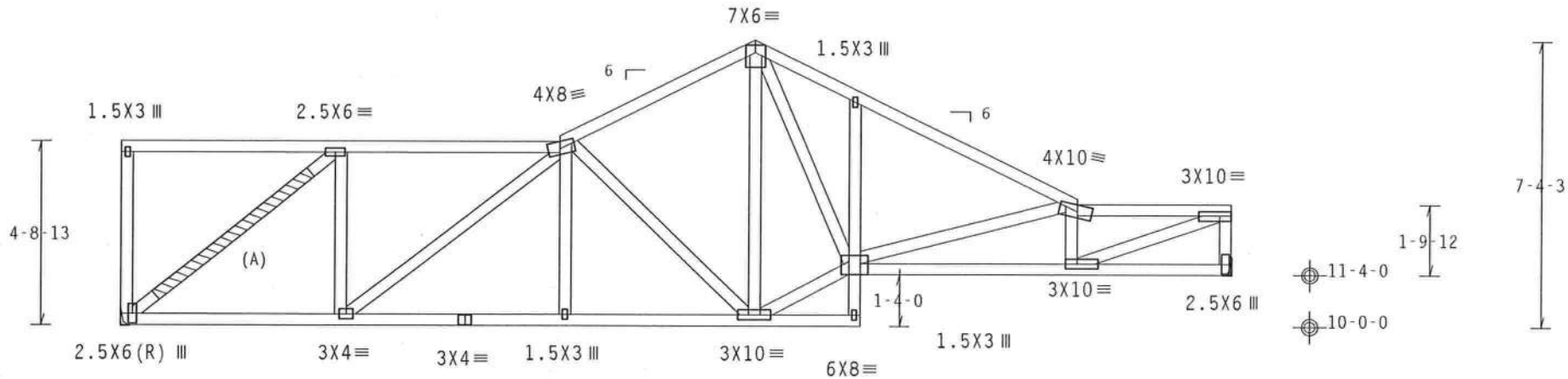

5-6-4	5-6-4	4-11-8	2-6-4	5-7-4	3-10-8
5-6-4	5-8-0	4-9-12	2-8-0	5-3-12	4-0-4

11-0-8	4-11-8	8-1-8	3-10-8
18-8-0		9-4-0	

28-0-0 Over 2 Supports

R=1153 U=228
RL=86/-111 H-Simpson LUS26
w/ (4) 10d Common, 0.148"x3.0" nails in Truss
w/ (4) 10d Common, 0.148"x3.0" nails in Girder
Supporting Member is (2)2x6 SP #2

R=1153 U=112 H-Simpson HUS26
w/ (4) 10d Common, 0.148"x3.0" nails in Truss
w/ (4) 10d Common, 0.148"x1.5" nails in Girder
Supporting Member is (1)2x6 SP #2

Design Crit: FBC2007Res/TPI-2002(STD)

PLT TYP. Wave FT/RT=20%(0%)/0(0) 9.09.03.0319.17 QTY 11 FL/-/4/-/-/R/- Scale =.25"/Ft.

ALPINE
ITW Building Components Group Inc.
Haines City, FL 33844
FL COA #0 278

WARNING TRUSSES REQUIRE EXTREME CARE IN FABRICATION, HANDLING, SHIPPING, INSTALLING AND BRACING. REFER TO BCSI (BUILDING COMPONENT SAFETY INFORMATION), PUBLISHED BY TPI (TRUSS PLATE INSTITUTE, 218 NORTH LEE STREET, SUITE 312, ALEXANDRIA, VA. 22314) AND WTCA (WOOD TRUSS COUNCIL OF AMERICA 6300 ENTERPRISE LANE, MADISON, WI 53719) FOR SAFETY PRACTICES PRIOR TO PERFORMING THESE FUNCTIONS. UNLESS OTHERWISE INDICATED TOP CHORD SHALL HAVE PROPERLY ATTACHED STRUCTURAL PANELS AND BOTTOM CHORD SHALL HAVE A PROPERLY ATTACHED RIGID CEILING.

IMPORTANTFURNISH A COPY OF THIS DESIGN TO THE INSTALLATION CONTRACTOR. ITW BCG, INC. SHALL NOT BE RESPONSIBLE FOR ANY DEVIATION FROM THIS DESIGN; ANY FAILURE TO BUILD THE TRUSS IN CONFORMANCE WITH TPI; OR FABRICATING, HANDLING, SHIPPING, INSTALLING & BRACING OF TRUSSES.
DESIGN CONFORMS WITH APPLICABLE PROVISIONS OF NDS (NATIONAL DESIGN SPEC, BY AF&PA) AND TPI. CONNECTOR PLATES ARE MADE OF 20/18/16GA (W,H/SS/K) ASTM A653 GRADE 40/60 (W, K/H,SS) GALV. STEEL. ANY PLATES TO EACH FACE OF TRUSS AND, UNLESS OTHERWISE LOCATED ON THIS DESIGN, POSITION PER DRAWINGS 160-01. ANY INSPECTION OF PLATES FOLLOWED BY (1) SHALL BE PER ANNEX A3 OF TPI1-2002 SEC.3. A SEAL ON THIS DRAWING INDICATES ACCEPTANCE OF PROFESSIONAL ENGINEERING RESPONSIBILITY SOLELY FOR THE TRUSS COMPONENT DESIGN SHOWN. THE SUITABILITY AND USE OF THIS COMPONENT FOR ANY BUILDING IS THE RESPONSIBILITY OF THE BUILDING DESIGNER PER ANSI/TPI 1 SEC. 2.

DOUGLAS FLEMING LICENSE No. 66648 STATE OF FLORIDA PROFESSIONAL ENGINEER
10/14/2010

TC LL	20.0 PSF	REF	R487-- 3279
TC DL	10.0 PSF	DATE	10/14/10
BC DL	10.0 PSF	DRW	HCUSR487 10287064
BC LL	0.0 PSF	HC-ENG	KD/DF
TOT.LD.	40.0 PSF	SEQN-	151084
DUR.FAC.	1.25	FROM	AH
SPACING	24.0"	JREF-	1U61487_Z01

(9-244--Fill in later EDGLEY -- , ** - B5)

THIS DWG PREPARED FROM COMPUTER INPUT (LOADS & DIMENSIONS) SUBMITTED BY TRUSS MFR.

Top chord 2x4 SP #2 Dense
Bot chord 2x4 SP #2 Dense
Webs 2x4 SP #3

End verticals not exposed to wind pressure.

(A) #3 or better scab brace. Same size & 80% length of web member. Attach with 10d Box or Gun (0.128"x3",min.)nails @ 6" OC.

Bottom chord checked for 10.00 psf non-concurrent live load.

MWFRS loads based on trusses located at least 15.75 ft. from roof edge.

110 mph wind, 15.75 ft mean hgt, ASCE 7-05, CLOSED bldg, not located within 4.50 ft from roof edge, CAT II, EXP C, wind TC DL=5.0 psf, wind BC DL=5.0 psf. Iw=1.00 GCpi(+/-)=0.18

Wind reactions based on MWFRS pressures.

In lieu of structural panels use purlins to brace all flat TC @ 24" OC.

Deflection meets L/240 live and L/180 total load.

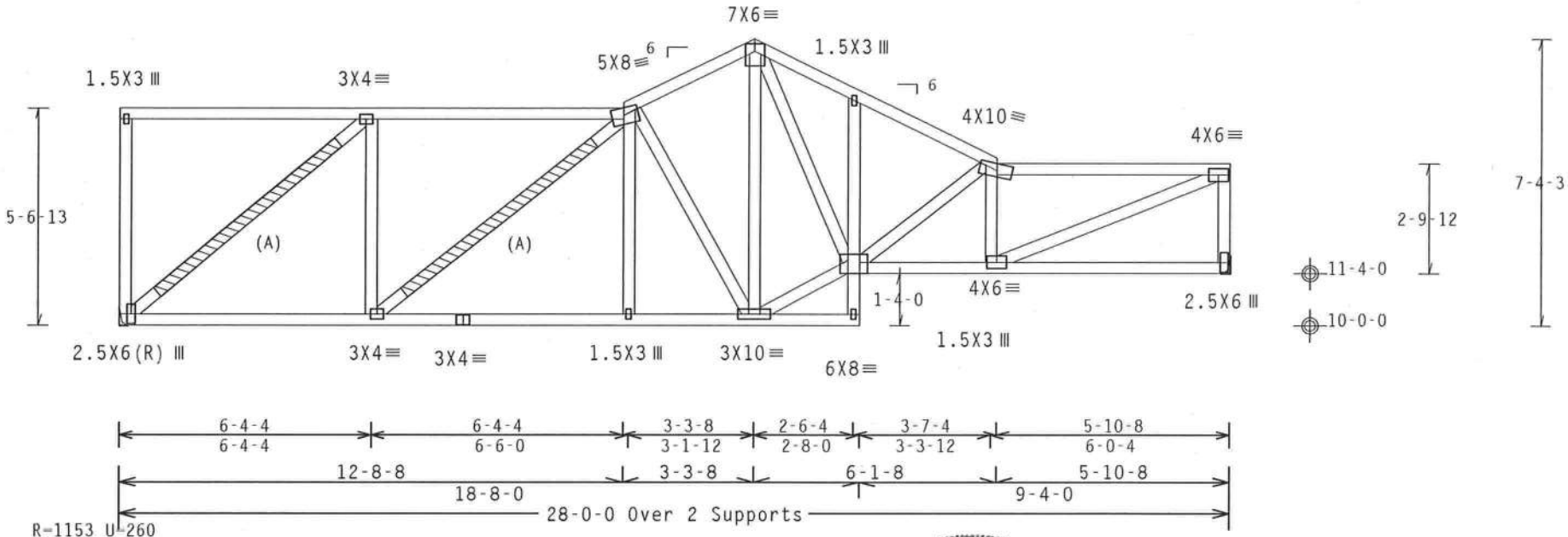

R=1153 U-260
RL=60/-82 H=Simpson LUS26
w/ (4) 10d Common, 0.148"x3.0" nails in Truss
w/ (4) 10d Common, 0.148"x3.0" nails in Girder
Supporting Member is (2)2x6 SP #2

R=1153 U-194 H=Simpson HUS26
w/ (4) 10d Common, 0.148"x3.0" nails in Truss
w/ (4) 10d Common, 0.148"x1.5" nails in Girder
Supporting Member is (1)2x6 SP #2

Design Crit: FBC2007Res/TPI-2002(STD)

PLT TYP. Wave | FT/RT=20%(0%)/0(0) | 9.05.03.0319.17 | QTY: 1 | FL/-/4/-/-/R/- | Scale =.25"/Ft.

ALPINE
ITW Building Components Group Inc.
Haines City, FL 33844
FL COA #0 278

WARNING TRUSSES REQUIRE EXTREME CARE IN FABRICATION, HANDLING, SHIPPING, INSTALLING AND BRACING. REFER TO BCSI (BUILDING COMPONENT SAFETY INFORMATION), PUBLISHED BY TPI (TRUSS PLATE INSTITUTE, 218 NORTH LEE STREET, SUITE 312, ALEXANDRIA, VA. 22314) AND WTCA (WOOD TRUSS COUNCIL OF AMERICA, 6300 ENTERPRISE LANE, MADISON, WI 53719) FOR SAFETY PRACTICES PRIOR TO PERFORMING THESE FUNCTIONS. UNLESS OTHERWISE INDICATED TOP CHORD SHALL HAVE PROPERLY ATTACHED STRUCTURAL PANELS AND BOTTOM CHORD SHALL HAVE A PROPERLY ATTACHED RIGID CEILING.

IMPORTANTFURNISH A COPY OF THIS DESIGN TO THE INSTALLATION CONTRACTOR. ITW BCG, INC. SHALL NOT BE RESPONSIBLE FOR ANY DEVIATION FROM THIS DESIGN; ANY FAILURE TO BUILD THE TRUSS IN CONFORMANCE WITH TPI; OR FABRICATING, HANDLING, SHIPPING, INSTALLING & BRACING OF TRUSSES.
DESIGN CONFORMS WITH APPLICABLE PROVISIONS OF NDS (NATIONAL DESIGN SPEC, BY AF&PA) AND TPI. ITW BCG CONNECTOR PLATES ARE MADE OF 20/18/16GA (W,H/SS/K) ASTM A653 GRADE 40/60 (H, K/H,SS) GALV. STEEL. APPLY PLATES TO EACH FACE OF TRUSS AND, UNLESS OTHERWISE LOCATED ON THIS DESIGN, POSITION PER DRAWINGS 160A. ANY INSPECTION OF PLATES FOLLOWED BY (1) SHALL BE PER ANNEX A3 OF TPI1-2002 SEC.3. A SEAL ON THIS DRAWING INDICATES ACCEPTANCE OF PROFESSIONAL ENGINEERING RESPONSIBILITY SOLELY FOR THE TRUSS COMPONENT DESIGN SHOWN. THE SUITABILITY AND USE OF THIS COMPONENT FOR ANY BUILDING IS THE RESPONSIBILITY OF THE BUILDING DESIGNER PER ANSI/TPI 1 SEC. 2.

DOUGLAS FLEMING LICENSE No. 66648 STATE OF FLORIDA PROFESSIONAL ENGINEER
10/14/2010

TC LL	20.0 PSF	REF	R487-- 3280
TC DL	10.0 PSF	DATE	10/14/10
BC DL	10.0 PSF	DRW	HCUSR487 10287063
BC LL	0.0 PSF	HC-ENG	KD/DF
TOT.LD.	40.0 PSF	SEQN-	151090
DUR.FAC.	1.25	FROM	AH
SPACING	24.0"	JREF-	1U61487_Z01

(9-244--Fill in later EDGLEY -- , ** - B6)

THIS DWG PREPARED FROM COMPUTER INPUT (LOADS & DIMENSIONS) SUBMITTED BY TRUSS MFR.

Top chord 2x4 SP #2 Dense
Bot chord 2x4 SP #2 Dense
Webs 2x4 SP #3

Left end vertical not exposed to wind pressure.

(A) #3 or better scab brace. Same size & 80% length of web member. Attach with 10d Box or Gun (0.128"x3",min.)nails @ 6" OC.

Truss passed check for 20 psf additional bottom chord live load in areas with 42"-high x 24"-wide clearance.

MWFRS loads based on trusses located at least 15.28 ft. from roof edge.

110 mph wind, 15.28 ft mean hgt, ASCE 7-05, CLOSED bldg, not located within 4.50 ft from roof edge, CAT II, EXP C, wind TC DL=5.0 psf, wind BC DL=5.0 psf. Iw=1.00 GCpi(+/-)=0.18

Wind reactions based on MWFRS pressures.

In lieu of structural panels use purlins to brace all flat TC @ 24" OC.

Bottom chord checked for 10.00 psf non-concurrent live load.

Deflection meets L/240 live and L/180 total load.

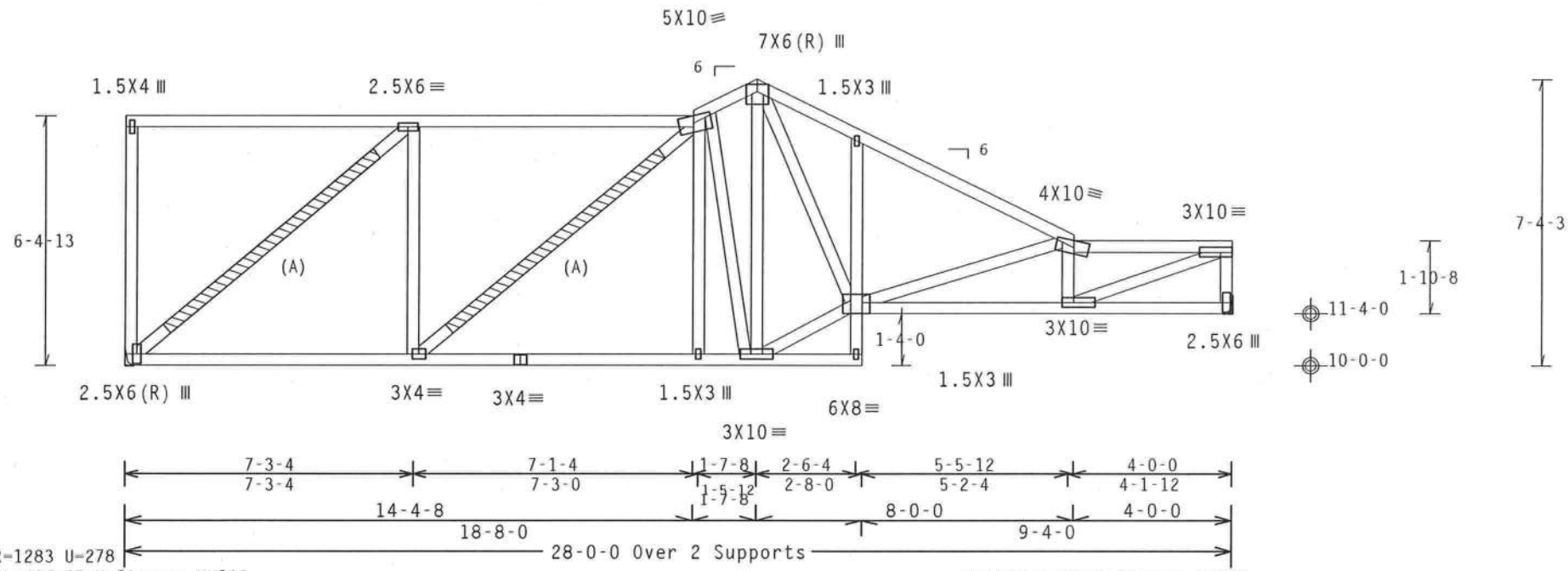

R=1283 U=278
RL=48/-97 H=Simpson HUS26
w/ (4) 10d Common, 0.148"x3.0" nails in Truss
w/ (14) 10d Common, 0.148"x3.0" nails in Girder
Supporting Member is (2)2x6 SP #2

R=1220 U=154 H=Simpson HUS26
w/ (4) 10d Common, 0.148"x3.0" nails in Truss
w/ (14) 10d Common, 0.148"x1.5" nails in Girder
Supporting Member is (1)2x6 SP #2

Design Crit: FBC2007Res/TPI-2002(STD)

PLT TYP. Wave | FT/RT=20%(0%)/0(0) | 9.0[illegible].03.0319.17 | QTY 1 | FL/-/4/-/-/R/- | Scale =.25"/Ft.

ALPINE
ITW Building Components Group Inc.
Haines City, FL 33844
FL COA #0 278

WARNING TRUSSES REQUIRE EXTREME CARE IN FABRICATION, HANDLING, SHIPPING, INSTALLING AND BRACING. REFER TO BCSI (BUILDING COMPONENT SAFETY INFORMATION), PUBLISHED BY TPI (TRUSS PLATE INSTITUTE, 218 NORTH LEE STREET, SUITE 312, ALEXANDRIA, VA. 22314) AND WTCA (WOOD TRUSS COUNCIL OF AMERICA, 6300 ENTERPRISE LANE, MADISON, WI 53719) FOR SAFETY PRACTICES PRIOR TO PERFORMING THESE FUNCTIONS. UNLESS OTHERWISE INDICATED TOP CHORD SHALL HAVE PROPERLY ATTACHED STRUCTURAL PANELS AND BOTTOM CHORD SHALL HAVE A PROPERLY ATTACHED RIGID CEILING.

IMPORTANT FURNISH A COPY OF THIS DESIGN TO THE INSTALLATION CONTRACTOR. ITW BCG, INC. SHALL NOT BE RESPONSIBLE FOR ANY DEVIATION FROM THIS DESIGN; ANY FAILURE TO BUILD THE TRUSS IN CONFORMANCE WITH TPI; OR FABRICATING, HANDLING, SHIPPING, INSTALLING & BRACING OF TRUSSES. DESIGN CONFORMS WITH APPLICABLE PROVISIONS OF NDS (NATIONAL DESIGN SPEC, BY AF&PA) AND TPI. ITW BCG CONNECTOR PLATES ARE MADE OF 20/18/16GA (H,H/SS/K) ASTM A653 GRADE 40/60 (H, K/H,SS) GALV. STEEL. APPLY PLATES TO EACH FACE OF TRUSS AND, UNLESS OTHERWISE LOCATED ON THIS DESIGN, POSITION PER DRAWINGS 160[illegible]. ANY INSPECTION OF PLATES FOLLOWED BY (1) SHALL BE PER ANNEX A3 OF TPI1-2002 SEC.3. A SEAL ON THIS DRAWING INDICATES ACCEPTANCE OF PROFESSIONAL ENGINEERING RESPONSIBILITY SOLELY FOR THE TRUSS COMPONENT DESIGN SHOWN. THE SUITABILITY AND USE OF THIS COMPONENT FOR ANY BUILDING IS THE RESPONSIBILITY OF THE BUILDING DESIGNER PER ANSI/TPI 1 SEC. 2.

DOUGLAS FLEMING LICENSED No. 66648 STATE OF FLORIDA PROFESSIONAL ENGINEER
10/14/2010

TC LL	20.0 PSF	REF	R487-- 3281
TC DL	10.0 PSF	DATE	10/14/10
BC DL	10.0 PSF	DRW	HCUSR487 10287053
BC LL	0.0 PSF	HC-ENG	KD/DF
TOT.LD.	40.0 PSF	SEQN-	151102
DUR.FAC.	1.25	FROM	AH
SPACING	24.0"	JREF-	1U61487_Z01

(9-244--Fill in later EDGLEY -- , ** - B7)

Top chord 2x4 SP #2 Dense
Bot chord 2x4 SP #2 Dense :B3 2x6 SP #2:
Webs 2x4 SP #3

Left end vertical not exposed to wind pressure.

(A) #3 or better scab brace. Same size & 80% length of web member. Attach with 10d Box or Gun (0.128"x3",min.)nails @ 6" OC.

Truss passed check for 20 psf additional bottom chord live load in areas with 42"-high x 24"-wide clearance.

MWFRS loads based on trusses located at least 15.00 ft. from roof edge.

110 mph wind, 15.00 ft mean hgt, ASCE 7-05, CLOSED bldg, not located within 4.50 ft from roof edge, CAT II, EXP C, wind TC DL=5.0 psf, wind BC DL=5.0 psf. Iw=1.00 GCpi(+/-)=0.18

Wind reactions based on MWFRS pressures.

In lieu of structural panels use purlins to brace all flat TC @ 24" OC.

Bottom chord checked for 10.00 psf non-concurrent live load.

Deflection meets L/240 live and L/180 total load.

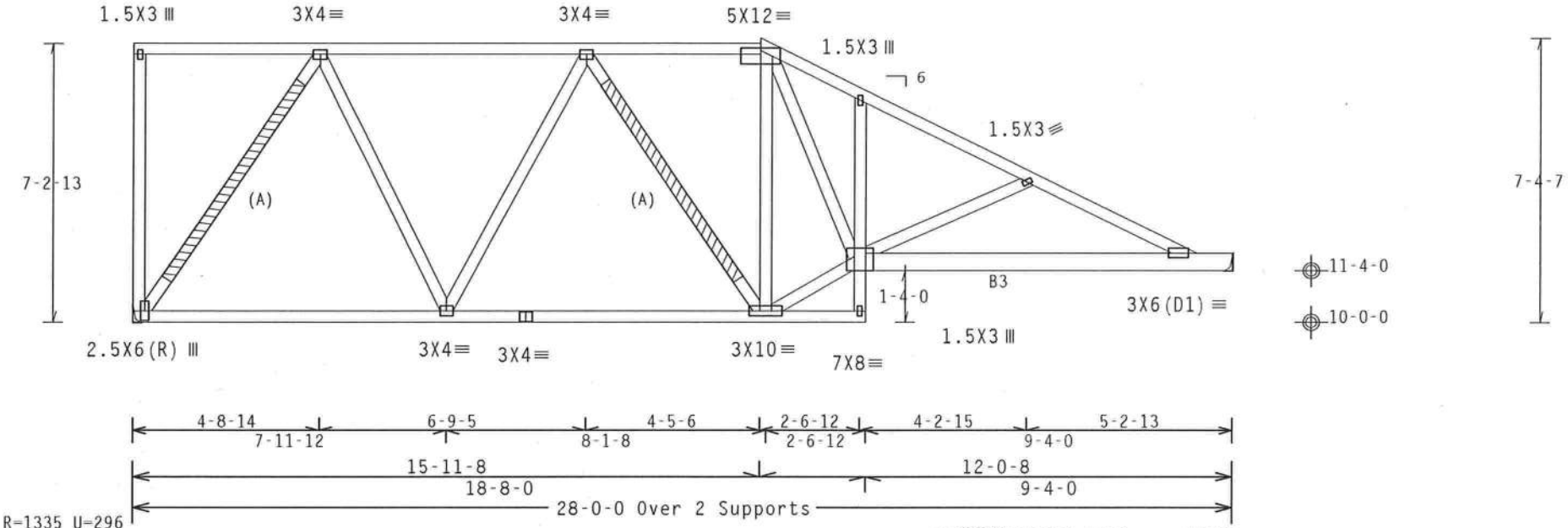

R=1335 U=296
RL=42/-125 H=Simpson HUS26
w/ (4) 10d Common, 0.148"x3.0" nails in Truss
w/ (14) 10d Common, 0.148"x3.0" nails in Girder
Supporting Member is (2)2x6 SP #2

R=120 U=-160 H=Simpson HUS26
w/ (4) 10d Common, 0.148"x3.0" nails in Truss
w/ (14) 10d Common, 0.148"x1.5" nails in Girder
Supporting Member is (1)2x6 SP #2

Design Crit: FBC2007Res/TPI-2002(STD)

PLT TYP. Wave | FT/RT=20%(0%)/0(0) | 9.05.03.0319.17 | QTY: | FL/-/4/-/-/R/- | Scale =.25"/Ft.

ALPINE
ITW Building Components Group Inc.
Haines City, FL 33844
FL COA #0 278

WARNING TRUSSES REQUIRE EXTREME CARE IN FABRICATION, HANDLING, SHIPPING, INSTALLING AND BRACING. REFER TO BCSI (BUILDING COMPONENT SAFETY INFORMATION), PUBLISHED BY TPI (TRUSS PLATE INSTITUTE, 218 NORTH LEE STREET, SUITE 312, ALEXANDRIA, VA. 22314) AND WTCA (WOOD TRUSS COUNCIL OF AMERICA, 6300 ENTERPRISE LANE, MADISON, WI 53719) FOR SAFETY PRACTICES PRIOR TO PERFORMING THESE FUNCTIONS. UNLESS OTHERWISE INDICATED TOP CHORD SHALL HAVE PROPERLY ATTACHED STRUCTURAL PANELS AND BOTTOM CHORD SHALL HAVE A PROPERLY ATTACHED RIGID CEILING.

IMPORTANTFURNISH A COPY OF THIS DESIGN TO THE INSTALLATION CONTRACTOR. ITW BCG, INC. SHALL NOT BE RESPONSIBLE FOR ANY DEVIATION FROM THIS DESIGN; ANY FAILURE TO BUILD THE TRUSS IN CONFORMANCE WITH TPI; OR FABRICATING, HANDLING, SHIPPING, INSTALLING & BRACING OF TRUSSES.
DESIGN CONFORMS WITH APPLICABLE PROVISIONS OF NDS (NATIONAL DESIGN SPEC, BY AF&PA) AND TPI. ITW BCG CONNECTOR PLATES ARE MADE OF 20/18/16GA (W,H/SS/K) ASTM A653 GRADE 40/60 (W, K/H,SS) GALV. STEEL. APPLY PLATES TO EACH FACE OF TRUSS AND, UNLESS OTHERWISE LOCATED ON THIS DESIGN, POSITION PER DRAWINGS 160A. ANY INSPECTION OF PLATES FOLLOWED BY (1) SHALL BE PER ANNEX A3 OF TPI1-2002 SEC.3. A SEAL ON THIS DRAWING INDICATES ACCEPTANCE OF PROFESSIONAL ENGINEERING RESPONSIBILITY SOLELY FOR THE TRUSS COMPONENT DESIGN SHOWN. THE SUITABILITY AND USE OF THIS COMPONENT FOR ANY BUILDING IS THE RESPONSIBILITY OF THE BUILDING DESIGNER PER ANSI/TPI 1 SEC. 2.

DOUGLAS FLEMING LICENSE No. 66648 STATE OF FLORIDA PROFESSIONAL ENGINEER
10/14/2010

TC LL	20.0 PSF	REF	R487-- 3282
TC DL	10.0 PSF	DATE	10/14/10
BC DL	10.0 PSF	DRW	HCUSR487 10287058
BC LL	0.0 PSF	HC-ENG	KD/DF
TOT.LD.	40.0 PSF	SEQN-	151113
DUR.FAC.	1.25	FROM	AH
SPACING	24.0"	JREF-	1U61487_Z01

THIS DWG PREPARED FROM COMPUTER INPUT (LOADS & DIMENSIONS) SUBMITTED BY TRUSS MFR.

(9-244--Fill in later EDGLEY -- , ** - B8)

Top chord 2x4 SP #2 Dense
Bot chord 2x4 SP #2 Dense
Webs 2x4 SP #3

Left end vertical not exposed to wind pressure.

Roof overhang supports 2.00 psf soffit load.

In lieu of structural panels use purlins to brace all flat TC @ 24" OC.

Bottom chord checked for 10.00 psf non-concurrent live load.

Deflection meets L/240 live and L/180 total load.

110 mph wind, 15.00 ft mean hgt, ASCE 7-05, CLOSED bldg, not located within 4.50 ft from roof edge, CAT II, EXP C, wind TC DL=5.0 psf, wind BC DL=5.0 psf. Iw=1.00 GCpi(+/-)=0.18

Wind reactions based on MWFRS pressures.

(A) #3 or better scab brace. Same size & 80% length of web member. Attach with 10d Box or Gun (0.128"x3",min.)nails @ 6" OC.

Truss passed check for 20 psf additional bottom chord live load in areas with 42"-high x 24"-wide clearance.

MWFRS loads based on trusses located at least 30.00 ft. from roof edge.

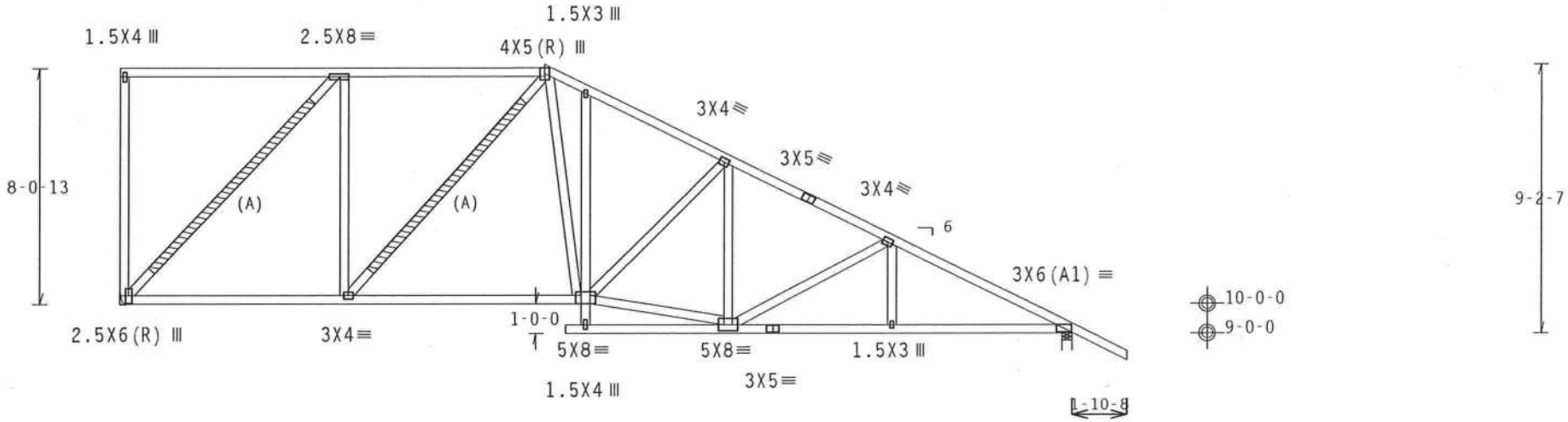

R=1516 U=313
RL=108/-222 H=Simpson HUS26
w/ (4) 10d Common, 0.148"x3.0" nails in Truss
w/ (14) 10d Common, 0.148"x3.0" nails in Girder
Supporting Member is (2)2x6 SP #2

Design Crit: FBC2007Res/TPI-2002(STD)

PLT TYP. Wave

FT/RT=20%(0%)/0(0)

09.05.03.0319.17

QTY:

FL/-/4/-/-/R/-

Scale =.1875"/Ft.

ALPINE
ITW Building Components Group Inc.
Haines City, FL 33844
FL COA #0 278

WARNING TRUSSES REQUIRE EXTREME CARE IN FABRICATION, HANDLING, SHIPPING, INSTALLING AND BRACING. REFER TO BCSI (BUILDING COMPONENT SAFETY INFORMATION), PUBLISHED BY TPI (TRUSS PLATE INSTITUTE, 218 NORTH LEE STREET, SUITE 312, ALEXANDRIA, VA. 22314) AND WTCA (WOOD TRUSS COUNCIL OF AMERICA, 6300 ENTERPRISE LANE, MADISON, WI 53719) FOR SAFETY PRACTICES PRIOR TO PERFORMING THESE FUNCTIONS. UNLESS OTHERWISE INDICATED TOP CHORD SHALL HAVE PROPERLY ATTACHED STRUCTURAL PANELS AND BOTTOM CHORD SHALL HAVE A PROPERLY ATTACHED RIGID CEILING.

IMPORTANTFURNISH A COPY OF THIS DESIGN TO THE INSTALLATION CONTRACTOR. ITW BCG, INC. SHALL NOT BE RESPONSIBLE FOR ANY DEVIATION FROM THIS DESIGN; ANY FAILURE TO BUILD THE TRUSS IN CONFORMANCE WITH TPI; OR FABRICATING, HANDLING, SHIPPING, INSTALLING & BRACING OF TRUSSES. DESIGN CONFORMS WITH APPLICABLE PROVISIONS OF NDS (NATIONAL DESIGN SPEC, BY AF&PA) AND TPI. ITW BCG CONNECTOR PLATES ARE MADE OF 20/18/16GA (W,H/SS/K) ASTM A653 GRADE 40/60 (W, K/H,SS) GALV. STEEL. APPLY PLATES TO EACH FACE OF TRUSS AND, UNLESS OTHERWISE LOCATED ON THIS DESIGN, POSITION PER DRAWINGS 160A-2. ANY INSPECTION OF PLATES FOLLOWED BY (1) SHALL BE PER ANNEX A3 OF TPI1-2002 SEC.3. A SEAL ON THIS DRAWING INDICATES ACCEPTANCE OF PROFESSIONAL ENGINEERING RESPONSIBILITY SOLELY FOR THE TRUSS COMPONENT DESIGN SHOWN. THE SUITABILITY AND USE OF THIS COMPONENT FOR ANY BUILDING IS THE RESPONSIBILITY OF THE BUILDING DESIGNER PER ANSI/TPI 1 SEC. 2.

DOUGLAS FLEMING LICENSE No. 66648 STATE OF FLORIDA PROFESSIONAL ENGINEER

10/14/2010

TC LL	20.0 PSF	REF R487-- 3283
TC DL	10.0 PSF	DATE 10/14/10
BC DL	10.0 PSF	DRW HCUSR487 10287052
BC LL	0.0 PSF	HC-ENG KD/DF
TOT.LD.	40.0 PSF	SEQN- 151119
DUR.FAC.	1.25	FROM AH
SPACING	24.0"	JREF- 1U61487_Z01

(9-244--Fill in later EDGLEY -- , ** - B3)

Top chord 2x4 SP #2 Dense
Bot chord 2x4 SP #2 Dense :B3 2x6 SP #2:
Webs 2x4 SP #3

Left end vertical not exposed to wind pressure.

In lieu of structural panels use purlins to brace all flat TC @ 24" OC.

Deflection meets L/240 live and L/180 total load.

110 mph wind, 15.00 ft mean hgt, ASCE 7-05, CLOSED bldg, not located within 4.50 ft from roof edge, CAT II, EXP C, wind TC DL=5.0 psf, wind BC DL=5.0 psf. Iw=1.00 GCpi(+/-)=0.18

Wind reactions based on MWFRS pressures.

Bottom chord checked for 10.00 psf non-concurrent live load.

MWFRS loads based on trusses located at least 15.00 ft. from roof edge.

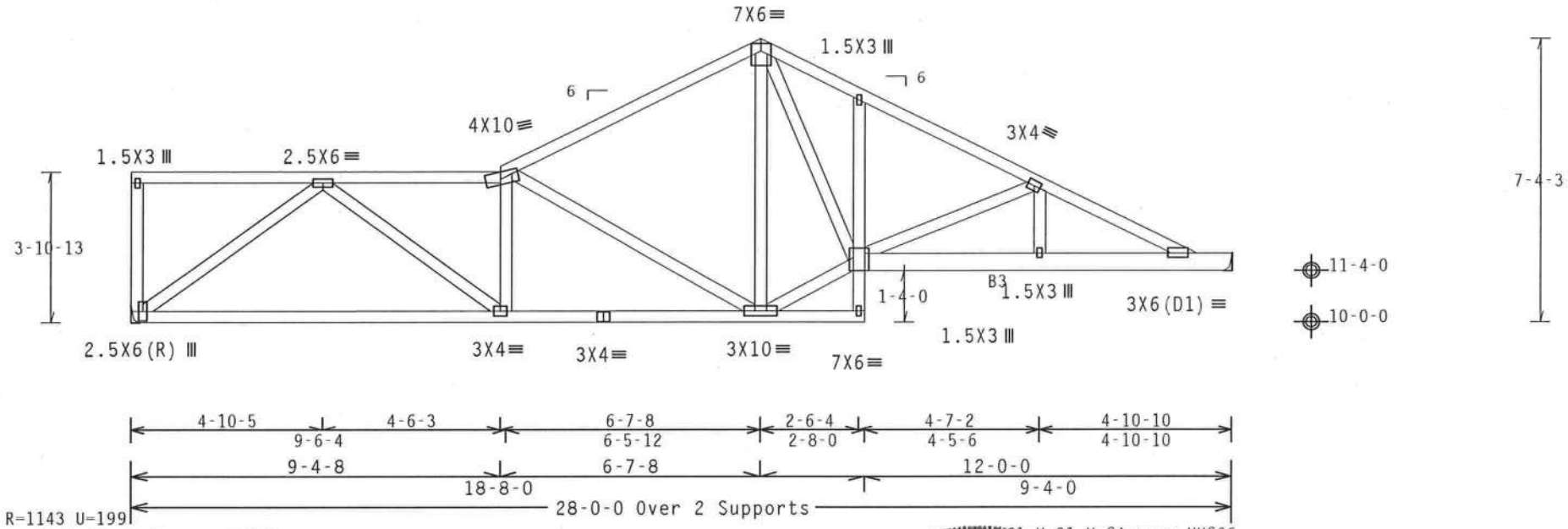

R=1143 U=199
RL=116/-150 H=Simpson LUS26
w/ (4) 10d Common, 0.148"x3.0" nails in Truss
w/ (4) 10d Common, 0.148"x3.0" nails in Girder
Supporting Member is (2)2x6 SP #2

R=1101 U=91 H=Simpson HUS26
w/ (4) 10d Common, 0.148"x3.0" nails in Truss
w/ (4) 10d 0.148"x1.5" nails in Girder
Supporting Member is (1)2x6 SP #2

Design Crit: FBC2007Res/TPI-2002(STD)

PLT TYP. Wave FT/RT=20%(0%)/0(0) 9.05.03.0319.17 QTY: FL/-/4/-/-/R/- Scale =.25"/Ft.

ALPINE
ITW Building Components Group Inc.
Haines City, FL 33844
FL COA #0 278

WARNING TRUSSES REQUIRE EXTREME CARE IN FABRICATION, HANDLING, SHIPPING, INSTALLING AND BRACING. REFER TO BCSI (BUILDING COMPONENT SAFETY INFORMATION), PUBLISHED BY TPI (TRUSS PLATE INSTITUTE, 218 NORTH LEE STREET, SUITE 312, ALEXANDRIA, VA, 22314) AND WTCA (WOOD TRUSS COUNCIL OF AMERICA, 6300 ENTERPRISE LANE, MADISON, WI 53719) FOR SAFETY PRACTICES PRIOR TO PERFORMING THESE FUNCTIONS. UNLESS OTHERWISE INDICATED TOP CHORD SHALL HAVE PROPERLY ATTACHED STRUCTURAL PANELS AND BOTTOM CHORD SHALL HAVE A PROPERLY ATTACHED RIGID CEILING.

IMPORTANTFURNISH A COPY OF THIS DESIGN TO THE INSTALLATION CONTRACTOR. ITW BCG, INC. SHALL NOT BE RESPONSIBLE FOR ANY DEVIATION FROM THIS DESIGN; ANY FAILURE TO BUILD THE TRUSS IN CONFORMANCE WITH TPI; OR FABRICATING, HANDLING, SHIPPING, INSTALLING & BRACING OF TRUSSES.
DESIGN CONFORMS WITH APPLICABLE PROVISIONS OF NDS (NATIONAL DESIGN SPEC, BY AF&PA) AND TPI. ITW BCG CONNECTOR PLATES ARE MADE OF 20/18/16GA (W,H/SS/k) ASTM A653 GRADE 40/60 (W, K/H,SS) GALV. STEEL. APPLY PLATES TO EACH FACE OF TRUSS AND, UNLESS OTHERWISE LOCATED ON THIS DESIGN, POSITION PER DRAWINGS 160A-2. ANY INSPECTION OF PLATES FOLLOWED BY (1) SHALL BE PER ANNEX A3 OF TPI1-2002 SEC.3. A SEAL ON THIS DRAWING INDICATES ACCEPTANCE OF PROFESSIONAL ENGINEERING RESPONSIBILITY SOLELY FOR THE TRUSS COMPONENT DESIGN SHOWN. THE SUITABILITY AND USE OF THIS COMPONENT FOR ANY BUILDING IS THE RESPONSIBILITY OF THE BUILDING DESIGNER PER ANSI/TPI 1 SEC. 2.

DOUGLAS FLEMING LICENSE No. 66648 STATE OF FLORIDA PROFESSIONAL ENGINEER
10/14/2010

TC LL	20.0 PSF	REF R487-- 3284
TC DL	10.0 PSF	DATE 10/14/10
BC DL	10.0 PSF	DRW HCUSR487 10287068
BC LL	0.0 PSF	HC-ENG KD/DF
TOT.LD.	40.0 PSF	SEQN- 150950
DUR.FAC.	1.25	FROM AH
SPACING	24.0"	JREF- 1U61487_Z01

(9-244--Fill in later EDGLEY -- , ** - H11B1)

Top chord 2x4 SP #2 Dense
Bot chord 2x4 SP #2 Dense
Webs 2x4 SP #3
:Lt Bearing Leg 2x6 SP #2:

Roof overhang supports 2.00 psf soffit load.

In lieu of structural panels use purlins to brace all flat TC @ 24" OC.

Truss passed check for 20 psf additional bottom chord live load in areas with 42"-high x 24"-wide clearance.

MWFRS loads based on trusses located at least 15.00 ft. from roof edge.

110 mph wind, 15.00 ft mean hgt, ASCE 7-05, CLOSED bldg, not located within 4.50 ft from roof edge, CAT II, EXP C, wind TC DL=5.0 psf, wind BC DL=5.0 psf. Iw=1.00 GCpi(+/-)=0.18

Wind reactions based on MWFRS pressures.

(A) #3 or better scab brace. Same size & 80% length of web member. Attach with 10d Box or Gun (0.128"x3",min.)nails @ 6" OC.

Bottom chord checked for 10.00 psf non-concurrent live load.

Deflection meets L/240 live and L/180 total load.

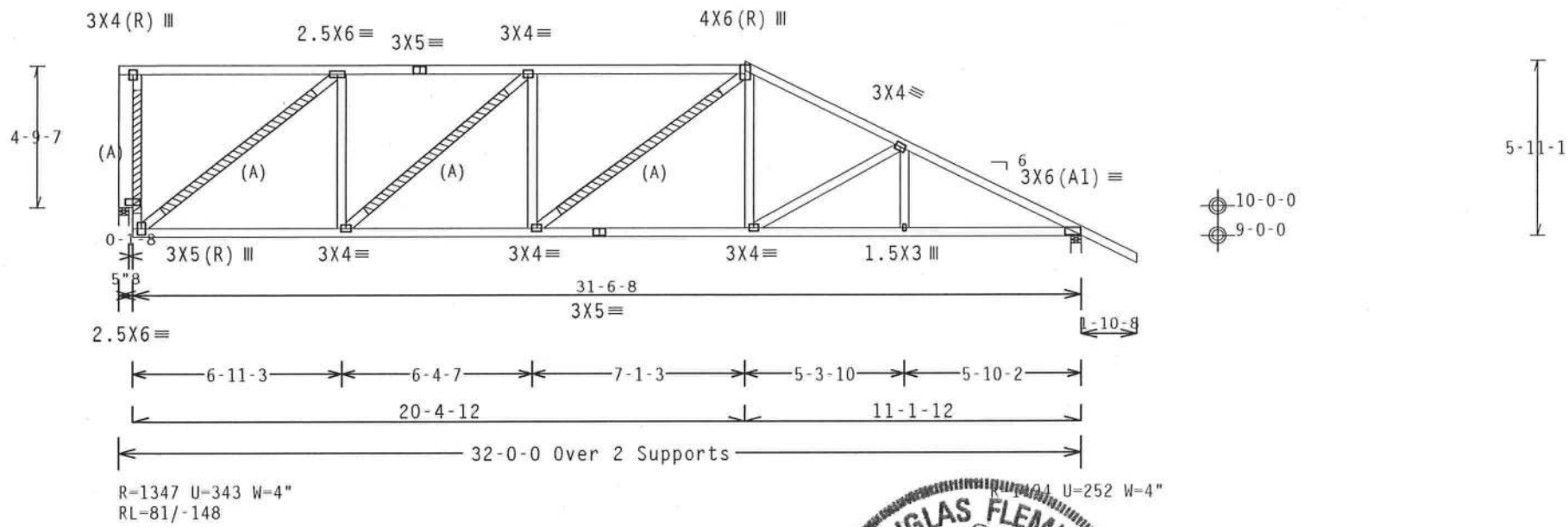

Design Crit: FBC2007Res/TPI-2002(STD)

PLT TYP. Wave | FT/RT=20%(0%)/0(0) | 9.05.03.0319.17 | QTY 1 | FL/-/4/-/-/R/- | Scale =.1875"/Ft.

ALPINE
ITW Building Components Group Inc.
Haines City, FL 33844
FL COA #0 278

WARNING TRUSSES REQUIRE EXTREME CARE IN FABRICATION, HANDLING, SHIPPING, INSTALLING AND BRACING. REFER TO BCSI (BUILDING COMPONENT SAFETY INFORMATION), PUBLISHED BY TPI (TRUSS PLATE INSTITUTE, 218 NORTH LEE STREET, SUITE 312, ALEXANDRIA, VA, 22314) AND WTCA (WOOD TRUSS COUNCIL OF AMERICA, 6300 ENTERPRISE LANE, MADISON, WI 53719) FOR SAFETY PRACTICES PRIOR TO PERFORMING THESE FUNCTIONS. UNLESS OTHERWISE INDICATED TOP CHORD SHALL HAVE PROPERLY ATTACHED STRUCTURAL PANELS AND BOTTOM CHORD SHALL HAVE A PROPERLY ATTACHED RIGID CEILING.

IMPORTANTFURNISH A COPY OF THIS DESIGN TO THE INSTALLATION CONTRACTOR. ITW BCG, INC. SHALL NOT BE RESPONSIBLE FOR ANY DEVIATION FROM THIS DESIGN; ANY FAILURE TO BUILD THE TRUSS IN CONFORMANCE WITH TPI; OR FABRICATING, HANDLING, SHIPPING, INSTALLING & BRACING OF TRUSSES.
DESIGN CONFORMS WITH APPLICABLE PROVISIONS OF NDS (NATIONAL DESIGN SPEC. BY AF&PA) AND TPI. ITW BCG CONNECTOR PLATES ARE MADE OF 20/18/16GA (W,H/SS/K) ASTM A653 GRADE 40/60 (W, K/H,SS) GALV. STEEL. APPLY PLATES TO EACH FACE OF TRUSS AND, UNLESS OTHERWISE LOCATED ON THIS DESIGN, POSITION PER DRAWINGS 1602 ANY INSPECTION OF PLATES FOLLOWED BY (1) SHALL BE PER ANNEX A3 OF TPI1-2002 SEC.3. A SEAL ON THIS DRAWING INDICATES ACCEPTANCE OF PROFESSIONAL ENGINEERING RESPONSIBILITY SOLELY FOR THE TRUSS COMPONENT DESIGN SHOWN. THE SUITABILITY AND USE OF THIS COMPONENT FOR ANY BUILDING IS THE RESPONSIBILITY OF THE BUILDING DESIGNER PER ANSI/TPI 1 SEC. 2.

DOUGLAS FLEMING LICENSE No. 66648 STATE OF FLORIDA PROFESSIONAL ENGINEER
10/14/2010

TC LL	20.0 PSF	REF	R487-- 3285
TC DL	10.0 PSF	DATE	10/14/10
BC DL	10.0 PSF	DRW	HCUSR487 10287005
BC LL	0.0 PSF	HC-ENG	KD/DF
TOT.LD.	40.0 PSF	SEQN-	152498
DUR.FAC.	1.25	FROM	AH
SPACING	24.0"	JREF-	1U61487_Z01

THIS DWG PREPARED FROM COMPUTER INPUT (LOADS & DIMENSIONS) SUBMITTED BY TRUSS MFR.

(9-244--Fill in later EDGLEY -- , ** - H7C)

Top chord 2x4 SP #2 Dense
Bot chord 2x4 SP #2 Dense
Webs 2x4 SP #3

Roof overhang supports 2.00 psf soffit load.

In lieu of structural panels use purlins to brace all flat TC @ 24" OC.

Left side jacks have 7-0-0 setback with 0-0-0 cant and 1-10-8 overhang. End jacks have 7-0-0 setback with 0-0-0 cant and 1-10-8 overhang. Right side jacks have 7-0-0 setback with 0-0-0 cant and 1-10-8 overhang.

110 mph wind, 15.00 ft mean hgt, ASCE 7-05, CLOSED bldg, not located within 4.50 ft from roof edge, CAT II, EXP C, wind TC DL=5.0 psf, wind BC DL=5.0 psf. Iw=1.00 GCpi(+/-)=0.18

Wind reactions based on MWFRS pressures.

#1 hip supports 7-0-0 jacks with no webs.

Deflection meets L/240 live and L/180 total load.

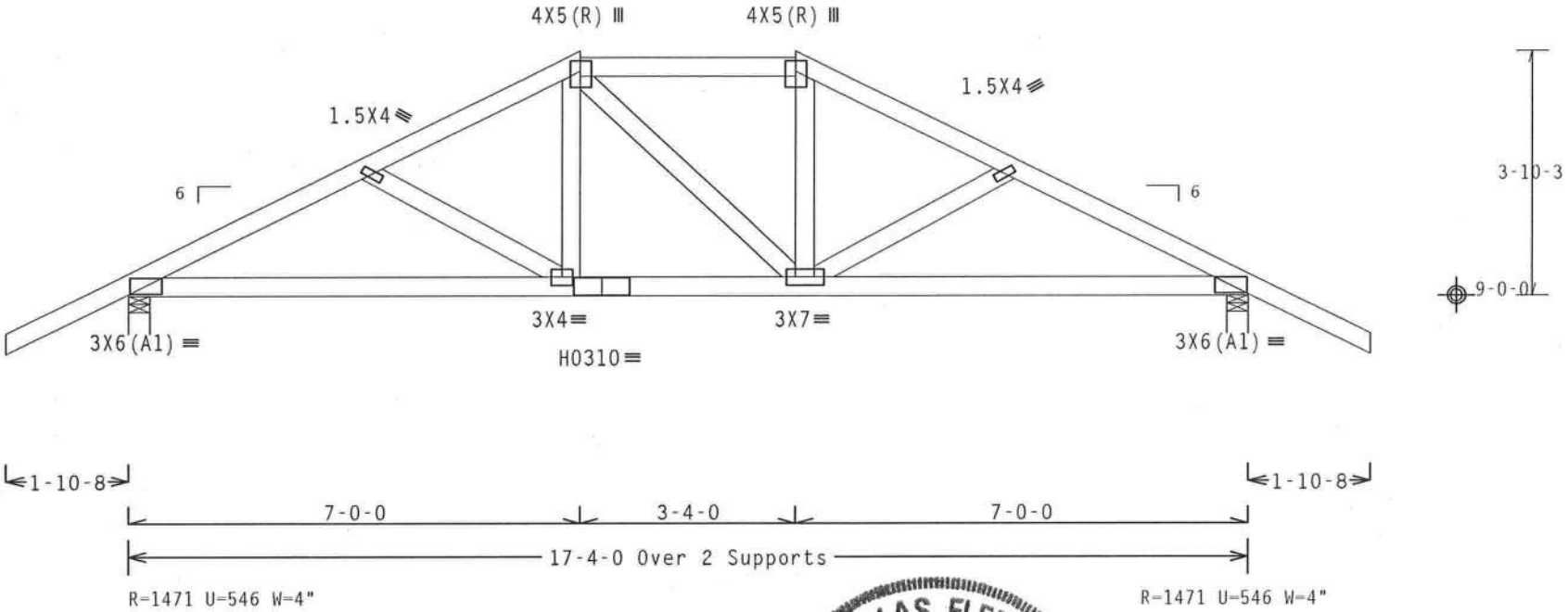

Design Crit: FBC2007Res/TPI-2002(STD)

PLT TYP. 20 Gauge HS,Wave FT/RT=20%(0%)/0(0) 9.02.03.0610.16 QTY: FL/-/4/-/-/R/- Scale =.375"/Ft.

ALPINE
ITW Building Components Group Inc.
Haines City, FL 33844
FL COA #0 278

WARNING TRUSSES REQUIRE EXTREME CARE IN FABRICATION, HANDLING, SHIPPING, INSTALLING AND BRACING. REFER TO BCSI (BUILDING COMPONENT SAFETY INFORMATION), PUBLISHED BY TPI (TRUSS PLATE INSTITUTE, 218 NORTH LEE STREET, SUITE 312, ALEXANDRIA, VA, 22314) AND WTCA (WOOD TRUSS COUNCIL OF AMERICA, 6300 ENTERPRISE LANE, MADISON, WI 53719) FOR SAFETY PRACTICES PRIOR TO PERFORMING THESE FUNCTIONS. UNLESS OTHERWISE INDICATED TOP CHORD SHALL HAVE PROPERLY ATTACHED STRUCTURAL PANELS AND BOTTOM CHORD SHALL HAVE A PROPERLY ATTACHED RIGID CEILING.

IMPORTANTFURNISH A COPY OF THIS DESIGN TO THE INSTALLATION CONTRACTOR. ITW BCG, INC. SHALL NOT BE RESPONSIBLE FOR ANY DEVIATION FROM THIS DESIGN; ANY FAILURE TO BUILD THE TRUSS IN CONFORMANCE WITH TPI; OR FABRICATING, HANDLING, SHIPPING, INSTALLING & BRACING OF TRUSSES.
DESIGN CONFORMS WITH APPLICABLE PROVISIONS OF NDS (NATIONAL DESIGN SPEC, BY AF&PA) AND TPI. ITW CONNECTOR PLATES APE MADE OF 20/18/16GA (W,H/SS/K) ASTM A653 GRADE 40/60 (W, K/H,SS) GALV. STEEL. APPLY PLATES TO EACH FACE OF TRUSS AND, UNLESS OTHEPWISE LOCATED ON THIS DESIGN, POSITION PER DRAWINGS 160A-ANY INSPECTION OF PLATES FOLLOWED BY (I) SHALL BE PER ANNEX A3 OF TPI1-2002 SEC.3. A SEAL ON THIS DRAWING INDICATES ACCEPTANCE OF PROFESSIONAL ENGINEERING RESPONSIBILITY SOLELY FOR THE TRUSS COMPONENT DESIGN SHOWN. THE SUITABILITY AND USE OF THIS COMPONENT FOR ANY BUILDING IS THE RESPONSIBILITY OF THE BUILDING DESIGNER PER ANSI/TPI 1 SEC. 2.

DOUGLAS FLEMING LICENSE No. 66648 STATE OF FLORIDA PROFESSIONAL ENGINEER
10/14/2010

TC LL	20.0 PSF	REF	R487-- 3286
TC DL	10.0 PSF	DATE	10/14/10
BC DL	10.0 PSF	DRW	HCUSR487 10287001
BC LL	0.0 PSF	HC-ENG	TCE/DF
TOT.LD.	40.0 PSF	SEQN-	68140
DUR.FAC.	1.25	FROM	AH
SPACING	24.0"	JREF-	1U61487_Z01

THIS DWG PREPARED FROM COMPUTER INPUT (LOADS & DIMENSIONS) SUBMITTED BY TRUSS MFR.

(9-244--Fill in later EDGLEY -- , ** - C)

Top chord 2x4 SP #2 Dense
Bot chord 2x4 SP #2 Dense
Webs 2x4 SP #3

Roof overhang supports 2.00 psf soffit load.

Bottom chord checked for 10.00 psf non-concurrent live load.

MWFRS loads based on trusses located at least 7.50 ft. from roof edge.

110 mph wind, 15.00 ft mean hgt, ASCE 7-05, CLOSED bldg, not located within 4.50 ft from roof edge, CAT II, EXP C, wind TC DL=5.0 psf, wind BC DL=5.0 psf. Iw=1.00 GCpi(+/-)=0.18

Wind reactions based on MWFRS pressures.

Deflection meets L/240 live and L/180 total load.

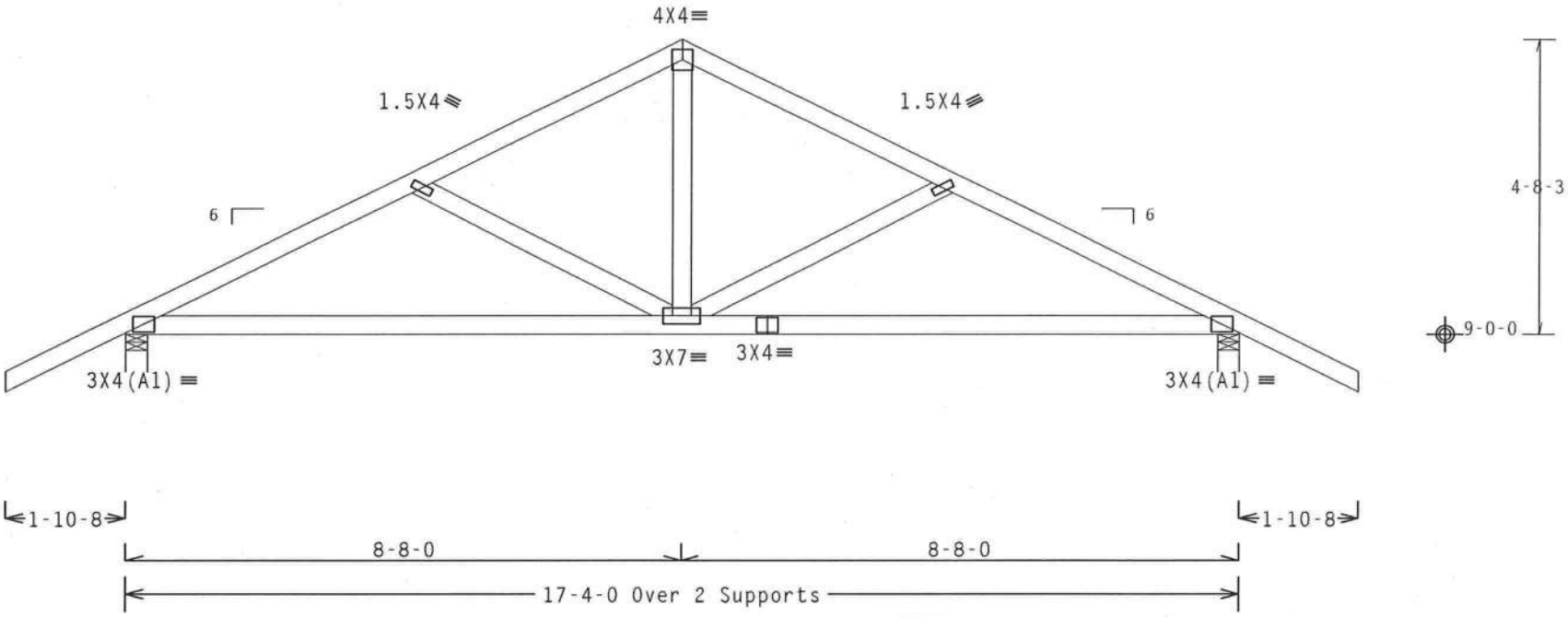

Design Crit: FBC2007Res/TPI-2002(STD)

PLT TYP. Wave | FT/RT=20%(0%)/0(0) | 9.02.03.0610.16 | QTY 3 | FL/-/4/-/-/R/- | Scale =.375"/Ft.

ALPINE
ITW Building Components Group Inc.
Haines City, FL 33844
FL COA #0 278

WARNING TRUSSES REQUIRE EXTREME CARE IN FABRICATION, HANDLING, SHIPPING, INSTALLING AND BRACING. REFER TO BCSI (BUILDING COMPONENT SAFETY INFORMATION), PUBLISHED BY TPI (TRUSS PLATE INSTITUTE, 218 NORTH LEE STREET, SUITE 312, ALEXANDRIA, VA, 22314) AND WTCA (WOOD TRUSS COUNCIL OF AMERICA, 6300 ENTERPRISE LANE, MADISON, WI 53719) FOR SAFETY PRACTICES PRIOR TO PERFORMING THESE FUNCTIONS. UNLESS OTHERWISE INDICATED TOP CHORD SHALL HAVE PROPERLY ATTACHED STRUCTURAL PANELS AND BOTTOM CHORD SHALL HAVE A PROPERLY ATTACHED RIGID CEILING.

IMPORTANTFURNISH A COPY OF THIS DESIGN TO THE INSTALLATION CONTRACTOR. ITW BCG, INC. SHALL NOT BE RESPONSIBLE FOR ANY DEVIATION FROM THIS DESIGN; ANY FAILURE TO BUILD THE TRUSS IN CONFORMANCE WITH TPI; OR FABRICATING, HANDLING, SHIPPING, INSTALLING & BRACING OF TRUSSES. DESIGN CONFORMS WITH APPLICABLE PROVISIONS OF NDS (NATIONAL DESIGN SPEC, BY AF&PA) AND TPI. ITW BCG CONNECTOR PLATES ARE MADE OF 20/18/16GA (W,H/SS/K) ASTM A653 GRADE 40/60 (W, K/H,SS) GALV. STEEL. APPLY PLATES TO EACH FACE OF TRUSS AND, UNLESS OTHERWISE LOCATED ON THIS DESIGN, POSITION PER DRAWINGS 160A. ANY INSPECTION OF PLATES FOLLOWED BY (1) SHALL BE PER ANNEX A3 OF TPI1-2002 SEC.3. A SEAL ON THIS DRAWING INDICATES ACCEPTANCE OF PROFESSIONAL ENGINEERING RESPONSIBILITY SOLELY FOR THE TRUSS COMPONENT DESIGN SHOWN. THE SUITABILITY AND USE OF THIS COMPONENT FOR ANY BUILDING IS THE RESPONSIBILITY OF THE BUILDING DESIGNER PER ANSI/TPI 1 SEC. 2.

DOUGLAS FLEMING LICENSE No. 66648 STATE OF FLORIDA PROFESSIONAL ENGINEER

10/14/2010

TC LL	20.0 PSF	REF	R487-- 3287
TC DL	10.0 PSF	DATE	10/14/10
BC DL	10.0 PSF	DRW	HCUSR487 10287011
BC LL	0.0 PSF	HC-ENG	TCE/DF *
TOT.LD.	40.0 PSF	SEQN-	68145
DUR.FAC.	1.25	FROM	AH
SPACING	24.0"	JREF-	1U61487_Z01

(9-244--Fill in later EDGLEY -- , ** - C1)

THIS DWG PREPARED FROM COMPUTER INPUT (LOADS & DIMENSIONS) SUBMITTED BY TRUSS MFR.

Top chord 2x4 SP #2 Dense
Bot chord 2x4 SP #2 Dense
Webs 2x4 SP #3

In lieu of structural panels use purlins to brace all flat TC @ 24" OC.

Bottom chord checked for 10.00 psf non-concurrent live load.

MWFRS loads based on trusses located at least 15.00 ft. from roof edge.

110 mph wind, 15.00 ft mean hgt, ASCE 7-05, CLOSED bldg, not located within 4.50 ft from roof edge, CAT II, EXP C, wind TC DL=5.0 psf, wind BC DL=5.0 psf. Iw=1.00 GCpi(+/-)=0.18

Wind reactions based on MWFRS pressures.

Deflection meets L/240 live and L/180 total load.

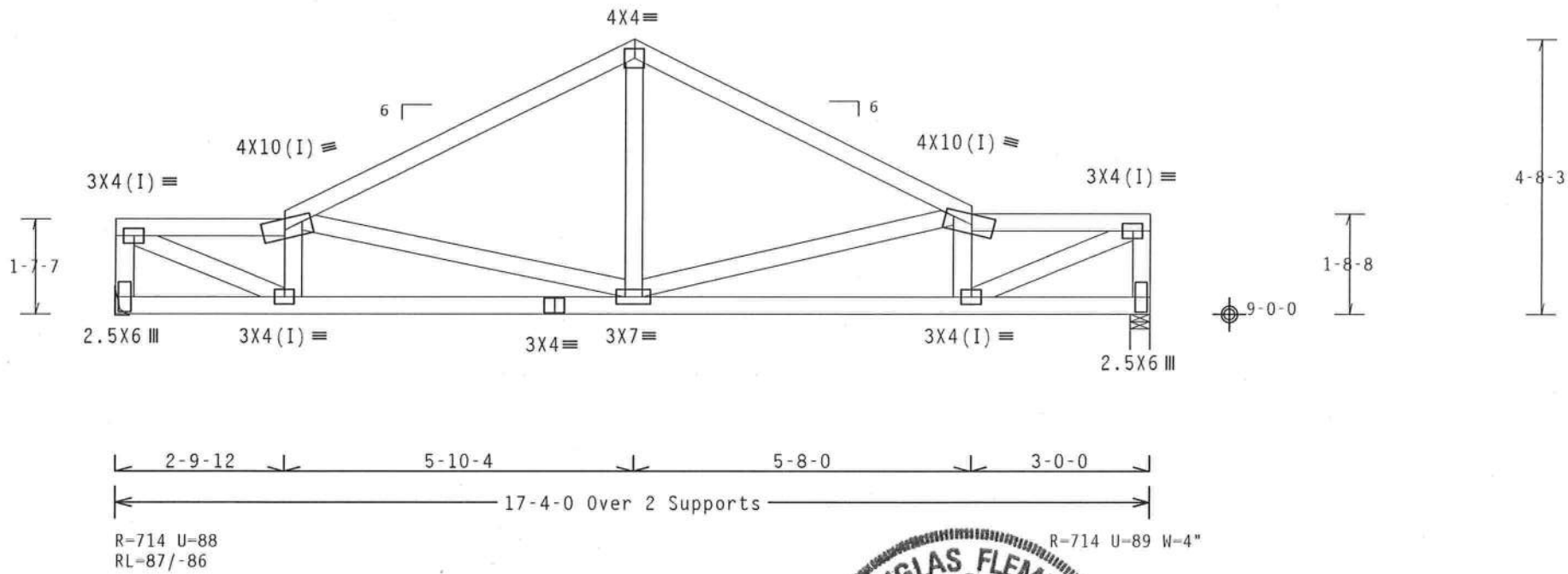

Design Crit: FBC2007Res/TPI-2002(STD)

PLT TYP. Wave | FT/RT=20%(0%)/0(0) | 9.03.03.0610.16 | QTY 1 | FL/-/4/-/-/R/- | Scale =.375"/Ft.

ALPINE
ITW Building Components Group Inc.
Haines City, FL 33844
FL COA #0 278

WARNING TRUSSES REQUIRE EXTREME CARE IN FABRICATION, HANDLING, SHIPPING, INSTALLING AND BRACING. REFER TO BCSI (BUILDING COMPONENT SAFETY INFORMATION), PUBLISHED BY TPI (TRUSS PLATE INSTITUTE, 218 NORTH LEE STREET, SUITE 312, ALEXANDRIA, VA. 22314) AND WTCA (WOOD TRUSS COUNCIL OF AMERICA, 6300 ENTERPRISE LANE, MADISON, WI 53719) FOR SAFETY PRACTICES PRIOR TO PERFORMING THESE FUNCTIONS. UNLESS OTHERWISE INDICATED TOP CHORD SHALL HAVE PROPERLY ATTACHED STRUCTURAL PANELS AND BOTTOM CHORD SHALL HAVE A PROPERLY ATTACHED RIGID CEILING.

IMPORTANTFURNISH A COPY OF THIS DESIGN TO THE INSTALLATION CONTRACTOR. ITW BCG, INC. SHALL NOT BE RESPONSIBLE FOR ANY DEVIATION FROM THIS DESIGN; ANY FAILURE TO BUILD THE TRUSS IN CONFORMANCE WITH TPI; OR FABRICATING, HANDLING, SHIPPING, INSTALLING & BRACING OF TRUSSES. DESIGN CONFORMS WITH APPLICABLE PROVISIONS OF NDS (NATIONAL DESIGN SPEC, BY AF&PA) AND TPI. ITW BCG CONNECTOR PLATES ARE MADE OF 20/18/16GA (W,H/SS/K) ASTM A653 GRADE 40/60 (W, K/H,SS) GALV. STEEL. APPLY PLATES TO EACH FACE OF TRUSS AND, UNLESS OTHERWISE LOCATED ON THIS DESIGN, POSITION PER DRAWINGS 1604. ANY INSPECTION OF PLATES FOLLOWED BY (1) SHALL BE PER ANNEX A3 OF TPI1-2002 SEC.3. A SEAL ON THIS DRAWING INDICATES ACCEPTANCE OF PROFESSIONAL ENGINEERING RESPONSIBILITY SOLELY FOR THE TRUSS COMPONENT DESIGN SHOWN. THE SUITABILITY AND USE OF THIS COMPONENT FOR ANY BUILDING IS THE RESPONSIBILITY OF THE BUILDING DESIGNER PER ANSI/TPI 1 SEC. 2.

DOUGLAS FLEMING LICENSE No. 66648 STATE OF FLORIDA PROFESSIONAL ENGINEER
10/14/2010

TC LL	20.0 PSF	REF	R487-- 3288
TC DL	10.0 PSF	DATE	10/14/10
BC DL	10.0 PSF	DRW	HCUSR487 10287055
BC LL	0.0 PSF	HC-ENG	TCE/DF
TOT.LD.	40.0 PSF	SEQN-	73035
DUR.FAC.	1.25		
SPACING	24.0"	JREF-	1U61487_Z01

(9-244--Fill in later EDGLEY -- , ** - C2)

THIS DWG PREPARED FROM COMPUTER INPUT (LOADS & DIMENSIONS) SUBMITTED BY TRUSS MFR.

Top chord 2x4 SP #2 Dense
Bot chord 2x4 SP #2 Dense
Webs 2x4 SP #3

End verticals not exposed to wind pressure.

In lieu of structural panels use purlins to brace all flat TC @ 24" OC.

Deflection meets L/240 live and L/180 total load.

110 mph wind, 15.00 ft mean hgt, ASCE 7-05, CLOSED bldg, not located within 4.50 ft from roof edge, CAT II, EXP C, wind TC DL=5.0 psf, wind BC DL=5.0 psf. Iw=1.00 GCpi(+/-)=0.18

Wind reactions based on MWFRS pressures.

Bottom chord checked for 10.00 psf non-concurrent live load.

MWFRS loads based on trusses located at least 15.00 ft. from roof edge.

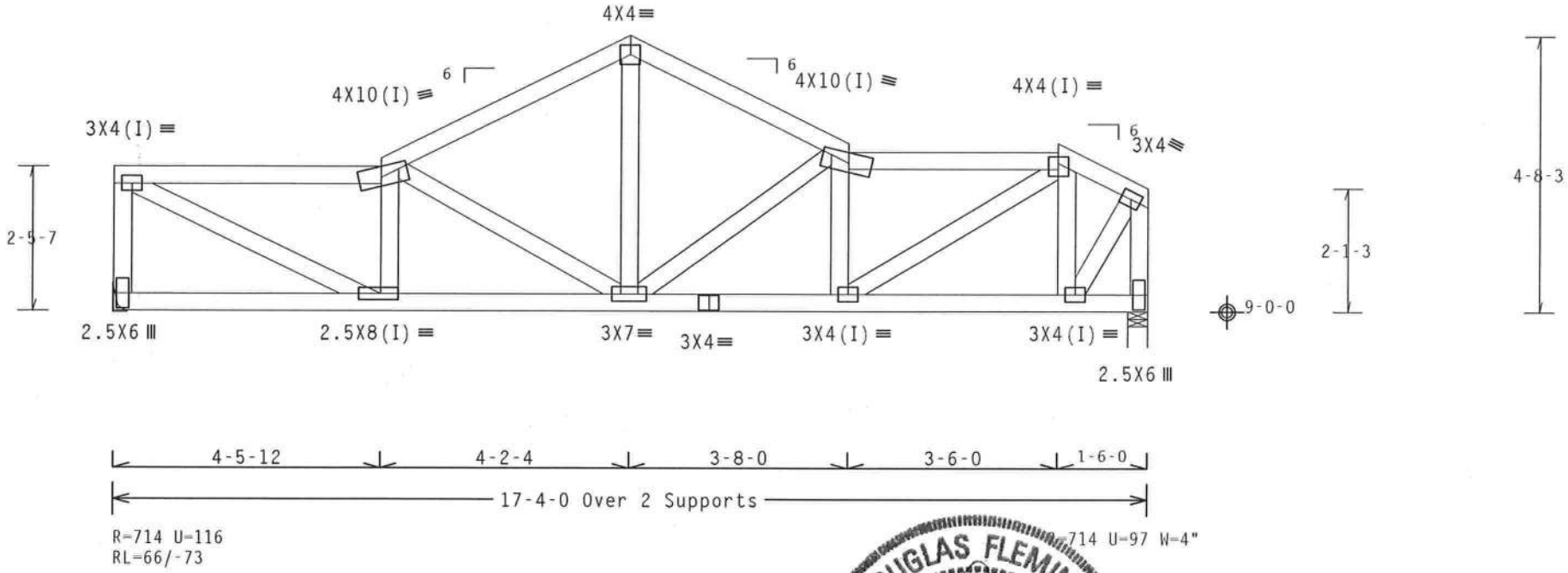

Design Crit: FBC2007Res/TPI-2002(STD)

PLT TYP. Wave

FT/RT=20%(0%)/0(0)

9.02.03.0610.16

QTY: 1

FL/-/4/-/-/R/-

Scale =.375"/Ft.

ALPINE
ITW Building Components Group Inc.
Haines City, FL 33844
FL COA #0 278

WARNING TRUSSES REQUIRE EXTREME CARE IN FABRICATION, HANDLING, SHIPPING, INSTALLING AND BRACING. REFER TO BCSI (BUILDING COMPONENT SAFETY INFORMATION), PUBLISHED BY TPI (TRUSS PLATE INSTITUTE, 218 NORTH LEE STREET, SUITE 312, ALEXANDRIA, VA, 22314) AND WTCA (WOOD TRUSS COUNCIL OF AMERICA, 6300 ENTERPRISE LANE, MADISON, WI 53719) FOR SAFETY PRACTICES PRIOR TO PERFORMING THESE FUNCTIONS. UNLESS OTHERWISE INDICATED TOP CHORD SHALL HAVE PROPERLY ATTACHED STRUCTURAL PANELS AND BOTTOM CHORD SHALL HAVE A PROPERLY ATTACHED RIGID CEILING.

IMPORTANTFURNISH A COPY OF THIS DESIGN TO THE INSTALLATION CONTRACTOR. ITW BCG, INC. SHALL NOT BE RESPONSIBLE FOR ANY DEVIATION FROM THIS DESIGN; ANY FAILURE TO BUILD THE TRUSS IN CONFORMANCE WITH TPI; OR FABRICATING, HANDLING, SHIPPING, INSTALLING & BRACING OF TRUSSES. DESIGN CONFORMS WITH APPLICABLE PROVISIONS OF NDS (NATIONAL DESIGN SPEC. BY AF&PA) AND TPI. ITW BCG CONNECTOR PLATES ARE MADE OF 20/18/16GA (W,H/SS/K) ASTM A653 GRADE 40/60 (W, K/H,SS) GALV. STEEL. APPLY PLATES TO EACH FACE OF TRUSS AND, UNLESS OTHERWISE LOCATED ON THIS DESIGN, POSITION PER DRAWINGS 160A-2. ANY INSPECTION OF PLATES FOLLOWED BY (I) SHALL BE PER ANNEX A3 OF TPI1-2002 SEC.3. A SEAL ON THIS DRAWING INDICATES ACCEPTANCE OF PROFESSIONAL ENGINEERING RESPONSIBILITY SOLELY FOR THE TRUSS COMPONENT DESIGN SHOWN. THE SUITABILITY AND USE OF THIS COMPONENT FOR ANY BUILDING IS THE RESPONSIBILITY OF THE BUILDING DESIGNER PER ANSI/TPI 1 SEC. 2.

DOUGLAS FLEMING LICENSE No. 66648 STATE OF FLORIDA PROFESSIONAL ENGINEER

10/14/2010

TC LL	20.0 PSF	REF R487-- 3289
TC DL	10.0 PSF	DATE 10/14/10
BC DL	10.0 PSF	DRW HCUSR487 10287057
BC LL	0.0 PSF	HC-ENG TCE/DF
TOT.LD.	40.0 PSF	SEQN- 73030
DUR.FAC.	1.25	
SPACING	24.0"	JREF- 1U61487_Z01

(9-244--Fill in later EDGLEY -- , ** - C3)

THIS DWG PREPARED FROM COMPUTER INPUT (LOADS & DIMENSIONS) SUBMITTED BY TRUSS MFR.

Top chord 2x4 SP #2 Dense
Bot chord 2x4 SP #2 Dense
Webs 2x4 SP #3

End verticals not exposed to wind pressure.

In lieu of structural panels use purlins to brace all flat TC @ 24" OC.

Deflection meets L/240 live and L/180 total load.

110 mph wind, 15.00 ft mean hgt, ASCE 7-05, CLOSED bldg, not located within 4.50 ft from roof edge, CAT II, EXP C, wind TC DL=5.0 psf, wind BC DL=5.0 psf. Iw=1.00 GCpi(+/-)=0.18

Wind reactions based on MWFRS pressures.

Bottom chord checked for 10.00 psf non-concurrent live load.

MWFRS loads based on trusses located at least 15.00 ft. from roof edge.

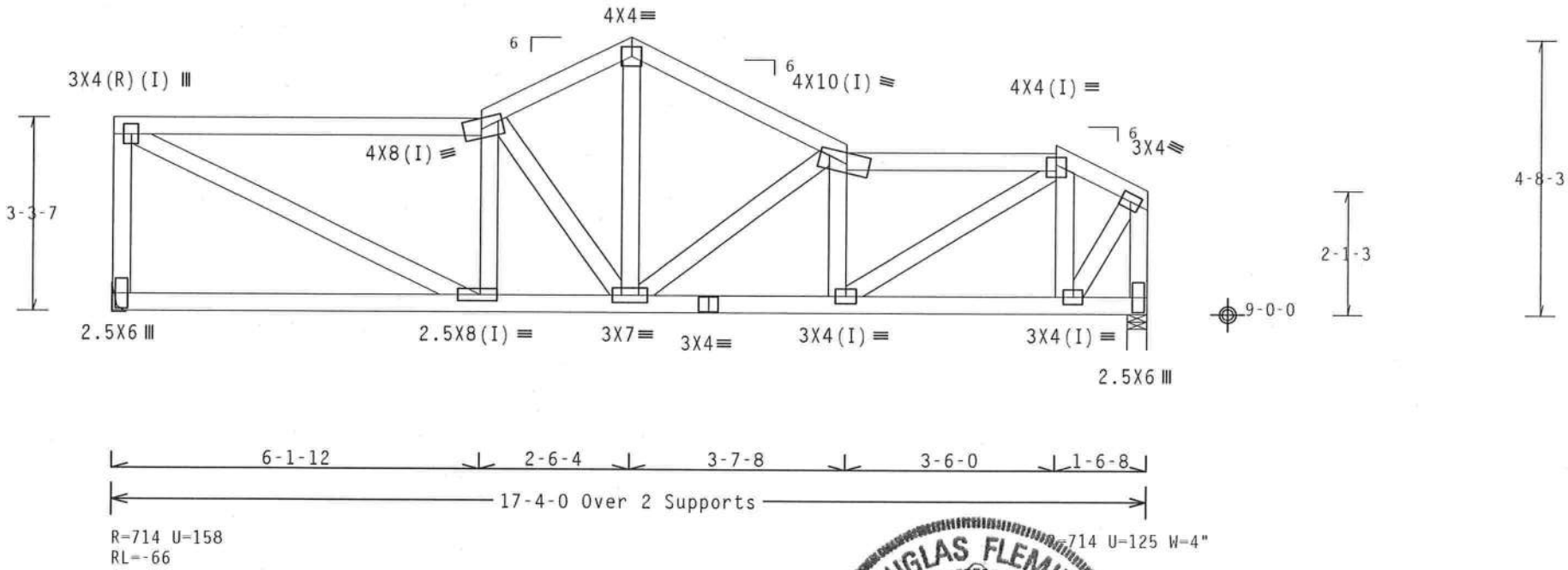

Design Crit: FBC2007Res/TPI-2002(STD)

PLT TYP. Wave

FT/RT=20%(0%)/0(0)

9.02.03.0610.16

QTY:

FL/-/4/-/-/R/-

Scale =.375"/Ft.

ALPINE
ITW Building Components Group Inc.
Haines City, FL 33844
FL COA #0 278

WARNING TRUSSES REQUIRE EXTREME CARE IN FABRICATION, HANDLING, SHIPPING, INSTALLING AND BRACING. REFER TO BCSI (BUILDING COMPONENT SAFETY INFORMATION), PUBLISHED BY TPI (TRUSS PLATE INSTITUTE, 218 NORTH LEE STREET, SUITE 312, ALEXANDRIA, VA. 22314) AND WTCA (WOOD TRUSS COUNCIL OF AMERICA, 6300 ENTERPRISE LANE, MADISON, WI 53719) FOR SAFETY PRACTICES PRIOR TO PERFORMING THESE FUNCTIONS. UNLESS OTHERWISE INDICATED TOP CHORD SHALL HAVE PROPERLY ATTACHED STRUCTURAL PANELS AND BOTTOM CHORD SHALL HAVE A PROPERLY ATTACHED RIGID CEILING.

IMPORTANTFURNISH A COPY OF THIS DESIGN TO THE INSTALLATION CONTRACTOR. ITW BCG, INC. SHALL NOT BE RESPONSIBLE FOR ANY DEVIATION FROM THIS DESIGN; ANY FAILURE TO BUILD THE TRUSS IN CONFORMANCE WITH TPI; OR FABRICATING, HANDLING, SHIPPING, INSTALLING & BRACING OF TRUSSES. DESIGN CONFORMS WITH APPLICABLE PROVISIONS OF NDS (NATIONAL DESIGN SPEC. BY AF&PA) AND TPI. ITW BCG CONNECTOR PLATES ARE MADE OF 20/18/16GA (W,H/SS/K) ASTM A653 GRADE 40/60 (W, K/H,SS) GALV. STEEL. APPLY PLATES TO EACH FACE OF TRUSS AND, UNLESS OTHERWISE LOCATED ON THIS DESIGN, POSITION PER DRAWINGS 160A-Z. ANY INSPECTION OF PLATES FOLLOWED BY (1) SHALL BE PER ANNEX A3 OF TPI1-2002 SEC.3. A SEAL ON THIS DRAWING INDICATES ACCEPTANCE OF PROFESSIONAL ENGINEERING RESPONSIBILITY SOLELY FOR THE TRUSS COMPONENT DESIGN SHOWN. THE SUITABILITY AND USE OF THIS COMPONENT FOR ANY BUILDING IS THE RESPONSIBILITY OF THE BUILDING DESIGNER PER ANSI/TPI 1 SEC. 2.

DOUGLAS FLEMING LICENSE No. 66648 STATE OF FLORIDA PROFESSIONAL ENGINEER

10/14/2010

TC LL	20.0 PSF	REF R487-- 3290
TC DL	10.0 PSF	DATE 10/14/10
BC DL	10.0 PSF	DRW HCUSR487 10287056
BC LL	0.0 PSF	HC-ENG TCE/DF
TOT.LD.	40.0 PSF	SEQN- 73025
DUR.FAC.	1.25	
SPACING	24.0"	JREF- 1U61487_Z01

(9-244--Fill in later EDGLEY -- , ** - H7D)

THIS DWG PREPARED FROM COMPUTER INPUT (LOADS & DIMENSIONS) SUBMITTED BY TRUSS MFR.

Top chord 2x4 SP #2 Dense
Bot chord 2x4 SP #2 Dense
Webs 2x4 SP #3

Roof overhang supports 2.00 psf soffit load.

In lieu of structural panels use purlins to brace all flat TC @ 24" OC.

Left side jacks have 7-0-0 setback with 0-0-0 cant and 1-10-8 overhang. End jacks have 7-0-0 setback with 0-0-0 cant and 1-10-8 overhang. Right side jacks have 7-0-0 setback with 0-0-0 cant and 1-10-8 overhang.

110 mph wind, 15.00 ft mean hgt, ASCE 7-05, CLOSED bldg, not located within 4.50 ft from roof edge, CAT II, EXP C, wind TC DL=5.0 psf, wind BC DL=5.0 psf. Iw=1.00 GCpi(+/-)=0.18

Wind reactions based on MWFRS pressures.

#1 hip supports 7-0-0 jacks with no webs.

Deflection meets L/240 live and L/180 total load.

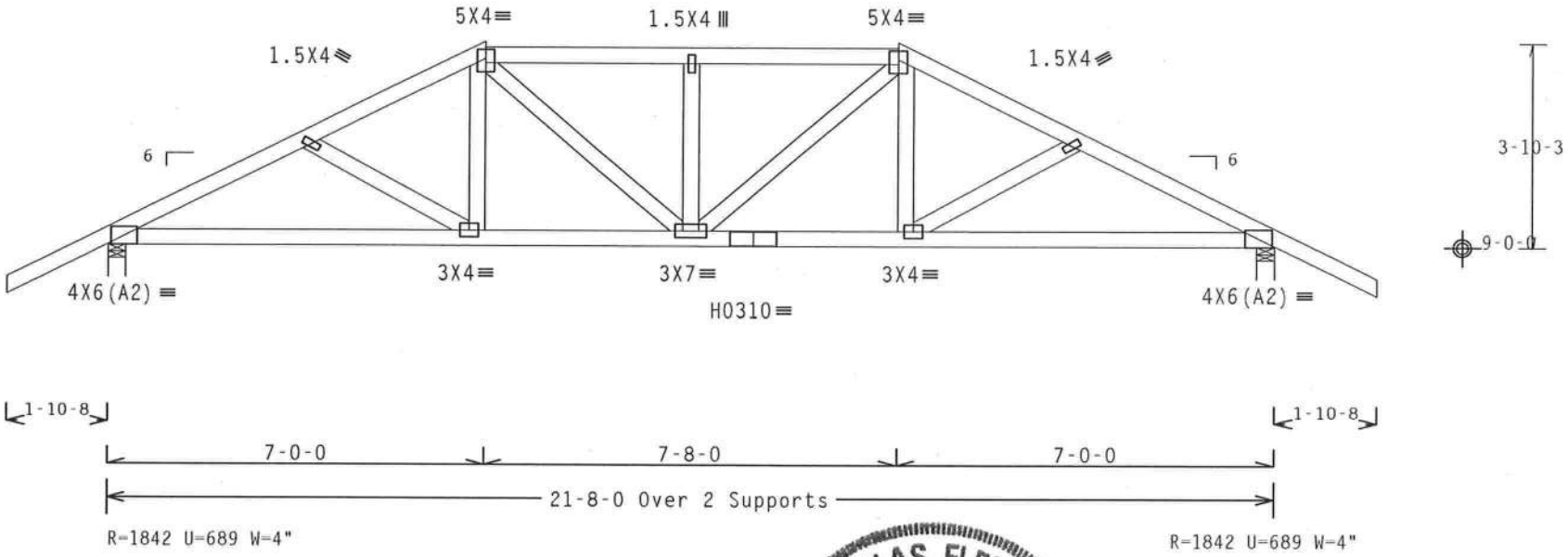

Design Crit: FBC2007Res/TPI-2002(STD)

PLT TYP. 20 Gauge HS,Wave

FT/RT=20%(0%)/0(0) 9.02.03.0610.16 QTY:

FL/-/4/-/-/R/-

Scale =.3125"/Ft.

ALPINE
ITW Building Components Group Inc.
Haines City, FL 33844
FL COA #0 278

WARNING TRUSSES REQUIRE EXTREME CARE IN FABRICATION, HANDLING, SHIPPING, INSTALLING AND BRACING. REFER TO BCSI (BUILDING COMPONENT SAFETY INFORMATION). PUBLISHED BY TPI (TRUSS PLATE INSTITUTE, 218 NORTH LEE STREET, SUITE 312, ALEXANDRIA, VA, 22314) AND WTCA (WOOD TRUSS COUNCIL OF AMERICA, 6300 ENTERPRISE LANE, MADISON, WI 53719) FOR SAFETY PRACTICES PRIOR TO PERFORMING THESE FUNCTIONS. UNLESS OTHERWISE INDICATED TOP CHORD SHALL HAVE PROPERLY ATTACHED STRUCTURAL PANELS AND BOTTOM CHORD SHALL HAVE A PROPERLY ATTACHED RIGID CEILING.

IMPORTANTFURNISH A COPY OF THIS DESIGN TO THE INSTALLATION CONTRACTOR. ITW BCG, INC. SHALL NOT BE RESPONSIBLE FOR ANY DEVIATION FROM THIS DESIGN; ANY FAILURE TO BUILD THE TRUSS IN CONFORMANCE WITH TPI; OR FABRICATING, HANDLING, SHIPPING, INSTALLING & BRACING OF TRUSSES. DESIGN CONFORMS WITH APPLICABLE PROVISIONS OF NDS (NATIONAL DESIGN SPEC. BY AF&PA) AND TPI. ITW BCG CONNECTOR PLATES ARE MADE OF 20/18/16GA (W,H/SS/K) ASTM A653 GRADE 40/60 (W, K/H,SS) GALV. STEEL. APPLY PLATES TO EACH FACE OF TRUSS AND, UNLESS OTHERWISE LOCATED ON THIS DESIGN, POSITION PER DRAWINGS 160A. ANY INSPECTION OF PLATES FOLLOWED BY (1) SHALL BE PER ANNEX A3 OF TPI1-2002 SEC.3. A SEAL ON THIS DRAWING INDICATES ACCEPTANCE OF PROFESSIONAL ENGINEERING RESPONSIBILITY SOLELY FOR THE TRUSS COMPONENT DESIGN SHOWN. THE SUITABILITY AND USE OF THIS COMPONENT FOR ANY BUILDING IS THE RESPONSIBILITY OF THE BUILDING DESIGNER PER ANSI/TPI 1 SEC. 2.

DOUGLAS FLEMING LICENSE No. 66648 STATE OF FLORIDA PROFESSIONAL ENGINEER

10/14/2010

TC LL	20.0 PSF	REF R487-- 3291
TC DL	10.0 PSF	DATE 10/14/10
BC DL	10.0 PSF	DRW HCUSR487 10287016
BC LL	0.0 PSF	HC-ENG TCE/DF
TOT.LD.	40.0 PSF	SEQN- 68178
DUR.FAC.	1.25	FROM AH
SPACING	24.0"	JREF- 1U61487_Z01

(9-244--Fill in later EDGLEY -- , ** - HM7D)

Top chord 2x4 SP #2 Dense :T2 2x6 SP #2:
Bot chord 2x6 SP #2
Webs 2x4 SP #3

Roof overhang supports 2.00 psf soffit load.

(A) (2) #3 or better scab braces. Same size & 80% length of web member. Attach one to each face w/10d Box or Gun (0.128"x3",min.)nails @ 6" OC.

#1 hip supports 7-0-0 jacks with no webs.

Deflection meets L/240 live and L/180 total load.

110 mph wind, 15.00 ft mean hgt, ASCE 7-05, CLOSED bldg, not located within 4.50 ft from roof edge, CAT II, EXP C, wind TC DL=5.0 psf, wind BC DL=5.0 psf. Iw=1.00 GCpi(+/-)=0.18

Wind reactions based on MWFRS pressures.

Right end vertical not exposed to wind pressure.

In lieu of structural panels use purlins to brace all flat TC @ 24" OC.

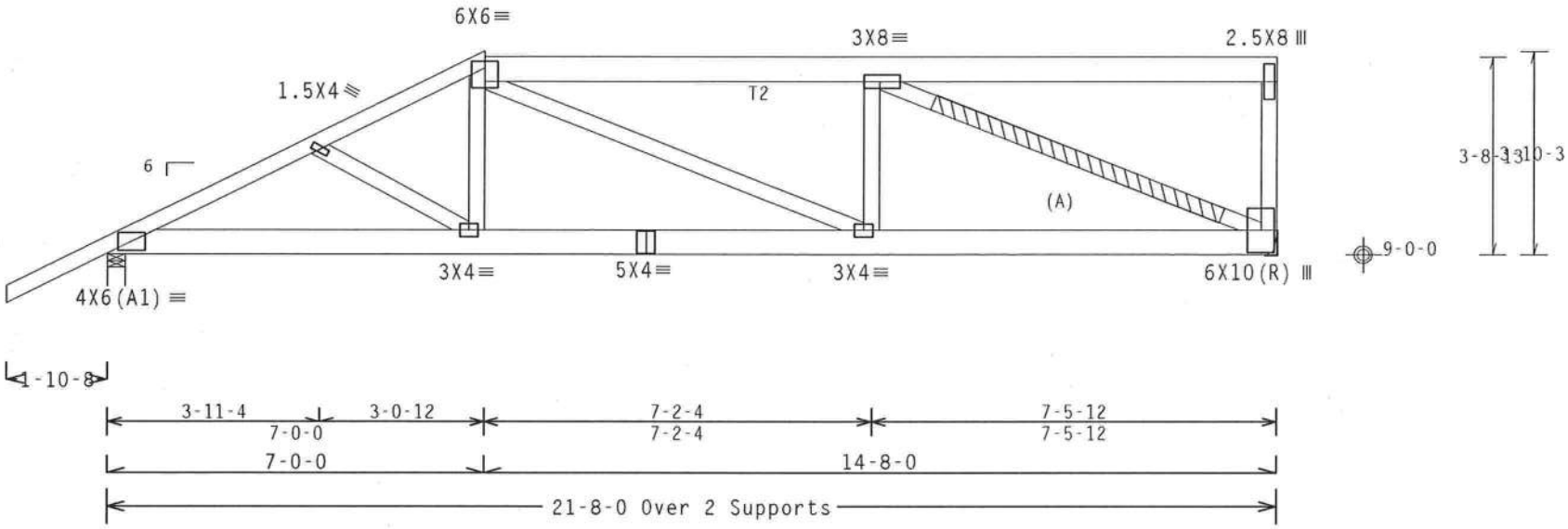

R=1752 U=677 W=4"

[illegible] U-773 H-Simpson HUS26
[illegible] 10d Common, 0.148"x3.0" nails in Truss
[illegible] 10d Common, 0.148"x3.0" nails in Girder
[illegible] member is (2)1.50x 5.50 SP SolidSawn

Design Crit: FBC2007Res/TPI-2002(STD)

PLT TYP. Wave FT/RT=20%(0%)/0(0) 9.0[illegible].03.0610.16 QTY 1 FL/-/4/-/-/R/- Scale =.3125"/Ft.

ALPINE
ITW Building Components Group Inc.
Haines City, FL 33844
FL COA #0 278

WARNING TRUSSES REQUIRE EXTREME CARE IN FABRICATION, HANDLING, SHIPPING, INSTALLING AND BRACING. REFER TO BCSI (BUILDING COMPONENT SAFETY INFORMATION), PUBLISHED BY TPI (TRUSS PLATE INSTITUTE, 218 NORTH LEE STREET, SUITE 312, ALEXANDRIA, VA. 22314) AND WTCA (WOOD TRUSS COUNCIL OF AMERICA, 6309 ENTERPRISE LANE, MADISON, WI 53719) FOR SAFETY PRACTICES PRIOR TO PERFORMING THESE FUNCTIONS. UNLESS OTHERWISE INDICATED TOP CHORD SHALL HAVE PROPERLY ATTACHED STRUCTURAL PANELS AND BOTTOM CHORD SHALL HAVE A PROPERLY ATTACHED RIGID CEILING.

IMPORTANTFURNISH A COPY OF THIS DESIGN TO THE INSTALLATION CONTRACTOR. ITW BCG, INC. SHALL NOT BE RESPONSIBLE FOR ANY DEVIATION FROM THIS DESIGN; ANY FAILURE TO BUILD THE TRUSS IN CONFORMANCE WITH TPI; OR FABRICATING, HANDLING, SHIPPING, INSTALLING & BRACING OF TRUSSES. DESIGN CONFORMS WITH APPLICABLE PROVISIONS OF NDS (NATIONAL DESIGN SPEC. BY AF&PA) AND TPI. CONNECTOR PLATES ARE MADE OF 20/18/16GA (W,H/SS/X) ASTM A653 GRADE 40/60 (W, X/H,SS) GALV. STEEL. APPLY PLATES TO EACH FACE OF TRUSS AND, UNLESS OTHERWISE LOCATED ON THIS DESIGN, POSITION PER DRAWINGS 16[illegible]. ANY INSPECTION OF PLATES FOLLOWED BY (1) SHALL BE PER ANNEX A3 OF TPI1-2002 SEC.3. A SEAL ON THIS DRAWING INDICATES ACCEPTANCE OF PROFESSIONAL ENGINEERING RESPONSIBILITY SOLELY FOR THE TRUSS COMPONENT DESIGN SHOWN. THE SUITABILITY AND USE OF THIS COMPONENT FOR ANY BUILDING IS THE RESPONSIBILITY OF THE BUILDING DESIGNER PER ANSI/TPI 1 SEC. 2.

DOUGLAS FLEMING LICENSED No. 66648 STATE OF FLORIDA PROFESSIONAL ENGINEER
10/14/2010

TC LL	20.0 PSF	REF	R487-- 3292
TC DL	10.0 PSF	DATE	10/14/10
BC DL	10.0 PSF	DRW	HCUSR487 10287036
BC LL	0.0 PSF	HC-ENG	KD/DF
TOT.LD.	40.0 PSF	SEQN-	77299
DUR.FAC.	1.25	FROM	AH
SPACING	24.0"	JREF-	1U61487_Z01

(9-244--Fill in later EDGLEY -- , ** - H9D)

THIS DWG PREPARED FROM COMPUTER INPUT (LOADS & DIMENSIONS) SUBMITTED BY TRUSS MFR.

Top chord 2x4 SP #2 Dense
Bot chord 2x4 SP #2 Dense
Webs 2x4 SP #3

Roof overhang supports 2.00 psf soffit load.

In lieu of structural panels use purlins to brace all flat TC @ 24" OC.

Deflection meets L/240 live and L/180 total load.

110 mph wind, 15.00 ft mean hgt, ASCE 7-05, CLOSED bldg, not located within 4.50 ft from roof edge, CAT II, EXP C, wind TC DL=5.0 psf, wind BC DL=5.0 psf. Iw=1.00 GCpi(+/-)=0.18

Wind reactions based on MWFRS pressures.

Bottom chord checked for 10.00 psf non-concurrent live load.

MWFRS loads based on trusses located at least 7.50 ft. from roof edge.

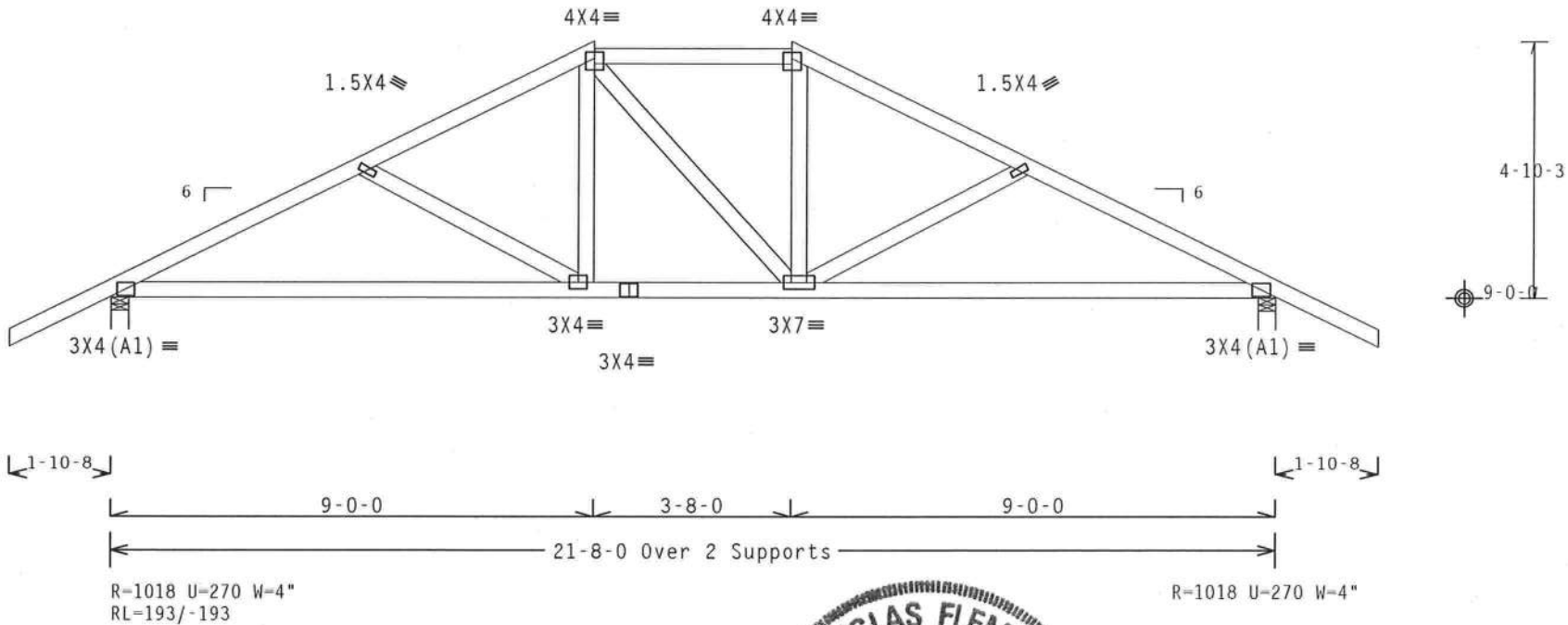

Design Crit: FBC2007Res/TPI-2002(STD)

PLT TYP. Wave FT/RT=20%(0%)/0(0) 9.02.03.0610.16 QTY 1 FL/-/4/-/-/R/- Scale =.3125"/Ft.

ALPINE
ITW Building Components Group Inc.
Haines City, FL 33844
FL COA #0 278

WARNING TRUSSES REQUIRE EXTREME CARE IN FABRICATION, HANDLING, SHIPPING, INSTALLING AND BRACING. REFER TO BCSI (BUILDING COMPONENT SAFETY INFORMATION), PUBLISHED BY TPI (TRUSS PLATE INSTITUTE, 218 N. NORTH LEE STREET, SUITE 312, ALEXANDRIA, VA. 22314) AND WTCA (WOOD TRUSS COUNCIL OF AMERICA, 6300 ENTERPRISE LANE, MADISON, WI 53719) FOR SAFETY PRACTICES PRIOR TO PERFORMING THESE FUNCTIONS. UNLESS OTHERWISE INDICATED TOP CHORD SHALL HAVE PROPERLY ATTACHED STRUCTURAL PANELS AND BOTTOM CHORD SHALL HAVE A PROPERLY ATTACHED RIGID CEILING.

IMPORTANTFURNISH A COPY OF THIS DESIGN TO THE INSTALLATION CONTRACTOR. ITW BCG, INC. SHALL NOT BE RESPONSIBLE FOR ANY DEVIATION FROM THIS DESIGN; ANY FAILURE TO BUILD THE TRUSS IN CONFORMANCE WITH TPI; OR FABRICATING, HANDLING, SHIPPING, INSTALLING & BRACING OF TRUSSES. DESIGN CONFORMS WITH APPLICABLE PROVISIONS OF NDS (NATIONAL DESIGN SPEC, BY AF&PA) AND TPI. THE PLATE CONNECTOR PLATES ARE MADE OF 20/18/16GA (W,H/SS/K) ASTM A653 GRADE 40/60 (W, K/H,SS) GALV. STEEL. APPLY PLATES TO EACH FACE OF TRUSS AND, UNLESS OTHERWISE LOCATED ON THIS DESIGN, POSITION PER DRAWINGS 1603. ANY INSPECTION OF PLATES FOLLOWED BY (1) SHALL BE PER ANNEX A3 OF TPI1-2002 SEC.3. A SEAL ON THIS DRAWING INDICATES ACCEPTANCE OF PROFESSIONAL ENGINEERING RESPONSIBILITY SOLELY FOR THE TRUSS COMPONENT DESIGN SHOWN. THE SUITABILITY AND USE OF THIS COMPONENT FOR ANY BUILDING IS THE RESPONSIBILITY OF THE BUILDING DESIGNER PER ANSI/TPI 1 SEC. 2.

DOUGLAS FLEMING LICENSE No. 66648 STATE OF FLORIDA PROFESSIONAL ENGINEER
10/14/2010

TC LL	20.0 PSF	REF	R487-- 3293
TC DL	10.0 PSF	DATE	10/14/10
BC DL	10.0 PSF	DRW	HCUSR487 10287017
BC LL	0.0 PSF	HC-ENG	TCE/DF *
TOT.LD.	40.0 PSF	SEQN-	68183
DUR.FAC.	1.25	FROM	AH
SPACING	24.0"	JREF-	1U61487_Z01

(9-244--Fill in later EDGLEY -- , ** - D)

THIS DWG PREPARED FROM COMPUTER INPUT (LOADS & DIMENSIONS) SUBMITTED BY TRUSS MFR.

Top chord 2x4 SP #2 Dense
Bot chord 2x4 SP #2 Dense
Webs 2x4 SP #3

Roof overhang supports 2.00 psf soffit load.

Bottom chord checked for 10.00 psf non-concurrent live load.

MWFRS loads based on trusses located at least 7.50 ft. from roof edge.

110 mph wind, 15.00 ft mean hgt, ASCE 7-05, CLOSED bldg, not located within 4.50 ft from roof edge, CAT II, EXP C, wind TC DL=5.0 psf, wind BC DL=5.0 psf. Iw=1.00 GCpi(+/-)=0.18

Wind reactions based on MWFRS pressures.

Deflection meets L/240 live and L/180 total load.

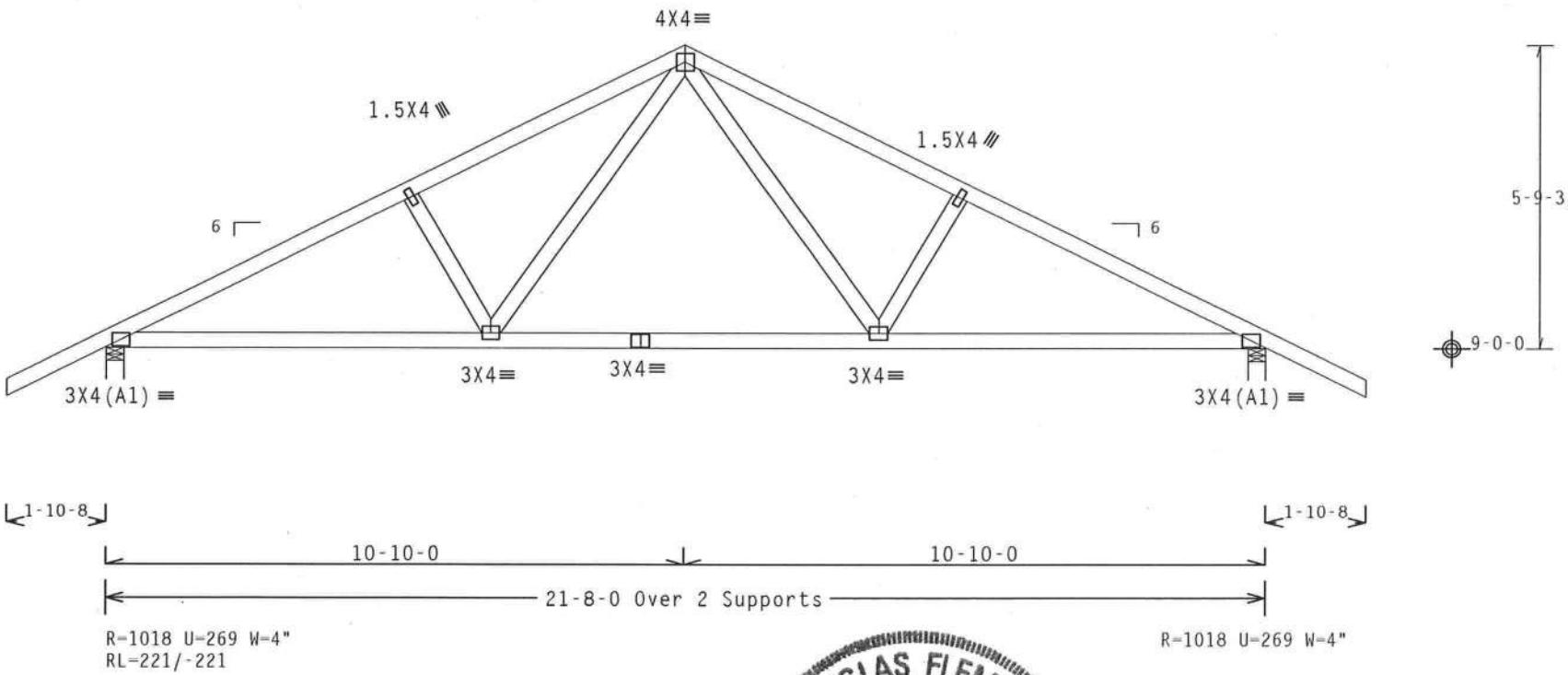

Design Crit: FBC2007Res/TPI-2002(STD)

PLT TYP. Wave FT/RT=20%(0%)/0(0) 9.0.03.0610.16 QTY 5 FL/-/4/-/-/R/- Scale =.3125"/Ft.

ALPINE
ITW Building Components Group Inc.
Haines City, FL 33844
FL COA #0 278

WARNING TRUSSES REQUIRE EXTREME CARE IN FABRICATION, HANDLING, SHIPPING, INSTALLING AND BRACING. REFER TO BCSI (BUILDING COMPONENT SAFETY INFORMATION), PUBLISHED BY TPI (TRUSS PLATE INSTITUTE, 218 NORTH LEE STREET, SUITE 312, ALEXANDRIA, VA, 22314) AND WTCA (WOOD TRUSS COUNCIL OF AMERICA, 6300 ENTERPRISE LANE, MADISON, WI 53719) FOR SAFETY PRACTICES PRIOR TO PERFORMING THESE FUNCTIONS. UNLESS OTHERWISE INDICATED TOP CHORD SHALL HAVE PROPERLY ATTACHED STRUCTURAL PANELS AND BOTTOM CHORD SHALL HAVE A PROPERLY ATTACHED RIGID CEILING.

IMPORTANTFURNISH A COPY OF THIS DESIGN TO THE INSTALLATION CONTRACTOR. ITW BCG, INC. SHALL NOT BE RESPONSIBLE FOR ANY DEVIATION FROM THIS DESIGN; ANY FAILURE TO BUILD THE TRUSS IN CONFORMANCE WITH TPI; OR FABRICATING, HANDLING, SHIPPING, INSTALLING & BRACING OF TRUSSES. DESIGN CONFORMS WITH APPLICABLE PROVISIONS OF NDS (NATIONAL DESIGN SPEC, BY AF&PA) AND TPI. CONNECTOR PLATES ARE MADE OF 20/18/16GA (W,H/SS/K) ASTM A653 GRADE 40/60 (W, K/H,SS) GALV. STEEL. APPLY PLATES TO EACH FACE OF TRUSS AND, UNLESS OTHERWISE LOCATED ON THIS DESIGN, POSITION PER DRAWINGS 160 ANY INSPECTION OF PLATES FOLLOWED BY (1) SHALL BE PER ANNEX A3 OF TPI1-2002 SEC.3. A SEAL ON THIS DRAWING INDICATES ACCEPTANCE OF PROFESSIONAL ENGINEERING RESPONSIBILITY SOLELY FOR THE TRUSS COMPONENT DESIGN SHOWN. THE SUITABILITY AND USE OF THIS COMPONENT FOR ANY BUILDING IS THE RESPONSIBILITY OF THE BUILDING DESIGNER PER ANSI/TPI 1 SEC. 2.

DOUGLAS FLEMING LICENSE No. 66648 STATE OF FLORIDA PROFESSIONAL ENGINEER
10/14/2010

TC LL	20.0 PSF	REF	R487-- 3294
TC DL	10.0 PSF	DATE	10/14/10
BC DL	10.0 PSF	DRW	HCUSR487 10287018
BC LL	0.0 PSF	HC-ENG	TCE/DF *
TOT.LD.	40.0 PSF	SEQN-	68188
DUR.FAC.	1.25	FROM	AH
SPACING	24.0"	JREF-	1U61487_Z01

(9-244--Fill in later EDGLEY -- , ** - D5)

THIS DWG PREPARED FROM COMPUTER INPUT (LOADS & DIMENSIONS) SUBMITTED BY TRUSS MFR.

Top chord 2x4 SP #2 Dense
Bot chord 2x4 SP #2 Dense
Webs 2x4 SP #3

Roof overhang supports 2.00 psf soffit load.

In lieu of structural panels use purlins to brace all flat TC @ 24" OC.

Bottom chord checked for 10.00 psf non-concurrent live load.

MWFRS loads based on trusses located at least 15.00 ft. from roof edge.

(**) 2 plate(s) require special positioning. Refer to scaled plate plot details for special positioning requirements.

110 mph wind, 15.00 ft mean hgt, ASCE 7-05, CLOSED bldg, not located within 4.50 ft from roof edge, CAT II, EXP C, wind TC DL=5.0 psf, wind BC DL=5.0 psf. Iw=1.00 GCpi(+/-)=0.18

Wind reactions based on MWFRS pressures.

Deflection meets L/240 live and L/180 total load.

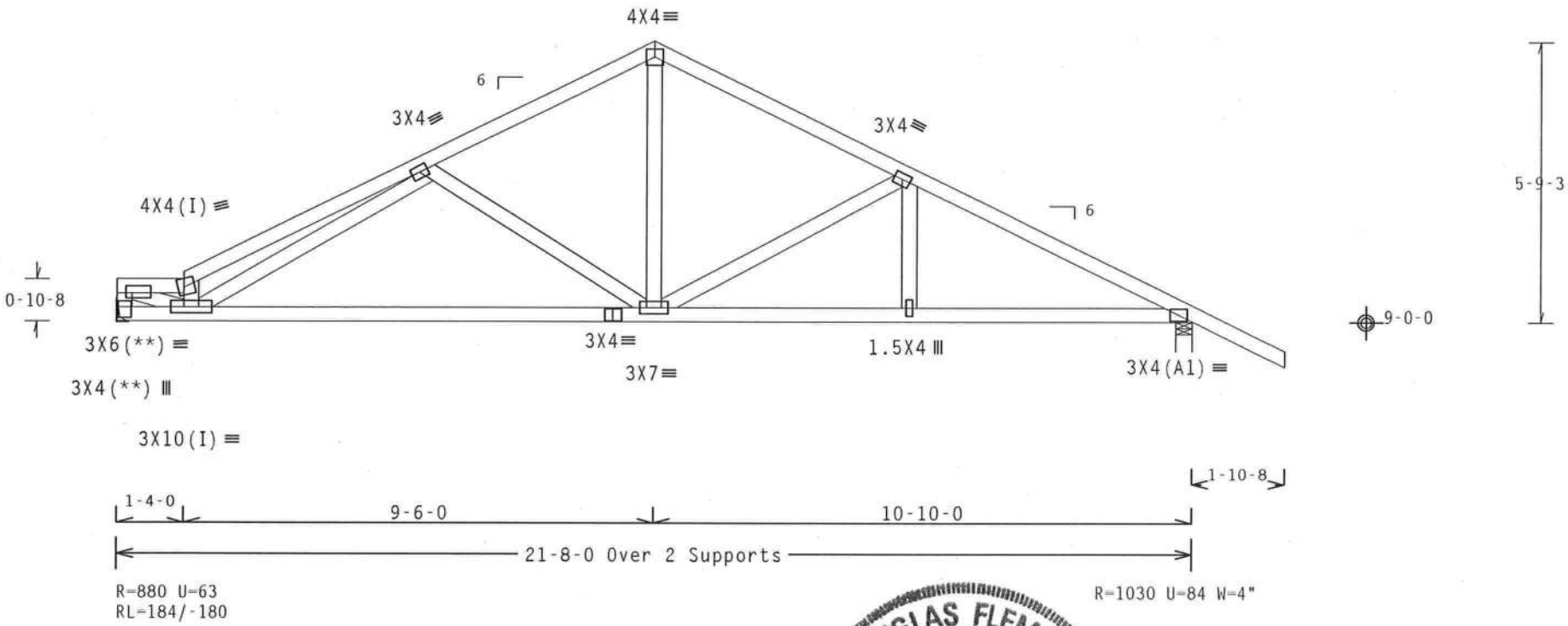

Design Crit: FBC2007Res/TPI-2002(STD)

PLT TYP. Wave FT/RT=20%(0%)/0(0) 9.02.03.0610.16 QTY 1 FL/-/4/-/-/R/- Scale =.3125"/Ft.

ALPINE
ITW Building Components Group Inc.
Haines City, FL 33844
FL COA #0 278

WARNING TRUSSES REQUIRE EXTREME CARE IN FABRICATION, HANDLING, SHIPPING, INSTALLING AND BRACING. REFER TO BCSI (BUILDING COMPONENT SAFETY INFORMATION), PUBLISHED BY TPI (TRUSS PLATE INSTITUTE, 218 NORTH LEE STREET, SUITE 312, ALEXANDRIA, VA, 22314) AND WTCA (WOOD TRUSS COUNCIL OF AMERICA, 6300 ENTERPRISE LANE, MADISON, WI 53719) FOR SAFETY PRACTICES PRIOR TO PERFORMING THESE FUNCTIONS. UNLESS OTHERWISE INDICATED TOP CHORD SHALL HAVE PROPERLY ATTACHED STRUCTURAL PANELS AND BOTTOM CHORD SHALL HAVE A PROPERLY ATTACHED RIGID CEILING.

IMPORTANTFURNISH A COPY OF THIS DESIGN TO THE INSTALLATION CONTRACTOR. ITW BCG, INC. SHALL NOT BE RESPONSIBLE FOR ANY DEVIATION FROM THIS DESIGN; ANY FAILURE TO BUILD THE TRUSS IN CONFORMANCE WITH TPI; OR FABRICATING, HANDLING, SHIPPING, INSTALLING & BRACING OF TRUSSES. DESIGN CONFORMS WITH APPLICABLE PROVISIONS OF NDS (NATIONAL DESIGN SPEC, BY AF&PA) AND TPI. IT IS ASSUMED CONNECTOR PLATES ARE MADE OF 20/18/16GA (W,H/SS/K) ASTM A653 GRADE 40/60 (W, K/H,SS) GALV. STEEL. APPLY PLATES TO EACH FACE OF TRUSS AND, UNLESS OTHERWISE LOCATED ON THIS DESIGN, POSITION PER DRAWINGS 160[illegible]. ANY INSPECTION OF PLATES FOLLOWED BY (1) SHALL BE PER ANNEX A3 OF TPI1-2002 SEC.3. A SEAL ON THIS DRAWING INDICATES ACCEPTANCE OF PROFESSIONAL ENGINEERING RESPONSIBILITY SOLELY FOR THE TRUSS COMPONENT DESIGN SHOWN. THE SUITABILITY AND USE OF THIS COMPONENT FOR ANY BUILDING IS THE RESPONSIBILITY OF THE BUILDING DESIGNER PER ANSI/TPI 1 SEC. 2.

DOUGLAS FLEMING LICENSE No. 66648 STATE OF FLORIDA PROFESSIONAL ENGINEER

10/14/2010

TC LL	20.0 PSF	REF	R487-- 3295
TC DL	10.0 PSF	DATE	10/14/10
BC DL	10.0 PSF	DRW	HCUSR487 10287033
BC LL	0.0 PSF	HC-ENG	TCE/DF
TOT.LD.	40.0 PSF	SEQN-	72795
DUR.FAC.	1.25	FROM	AH
SPACING	24.0"	JREF-	1U61487_Z01

(9-244--Fill in later EDGLEY -- , ** - D4)

THIS DWG PREPARED FROM COMPUTER INPUT (LOADS & DIMENSIONS) SUBMITTED BY TRUSS MFR.

Top chord 2x4 SP #2 Dense
Bot chord 2x4 SP #2 Dense
Webs 2x4 SP #3

Roof overhang supports 2.00 psf soffit load.

In lieu of structural panels use purlins to brace all flat TC @ 24" OC.

Deflection meets L/240 live and L/180 total load.

110 mph wind, 15.00 ft mean hgt, ASCE 7-05, CLOSED bldg, not located within 4.50 ft from roof edge, CAT II, EXP C, wind TC DL=5.0 psf, wind BC DL=5.0 psf. Iw=1.00 GCpi(+/-)=0.18

Wind reactions based on MWFRS pressures.

Bottom chord checked for 10.00 psf non-concurrent live load.

MWFRS loads based on trusses located at least 15.00 ft. from roof edge.

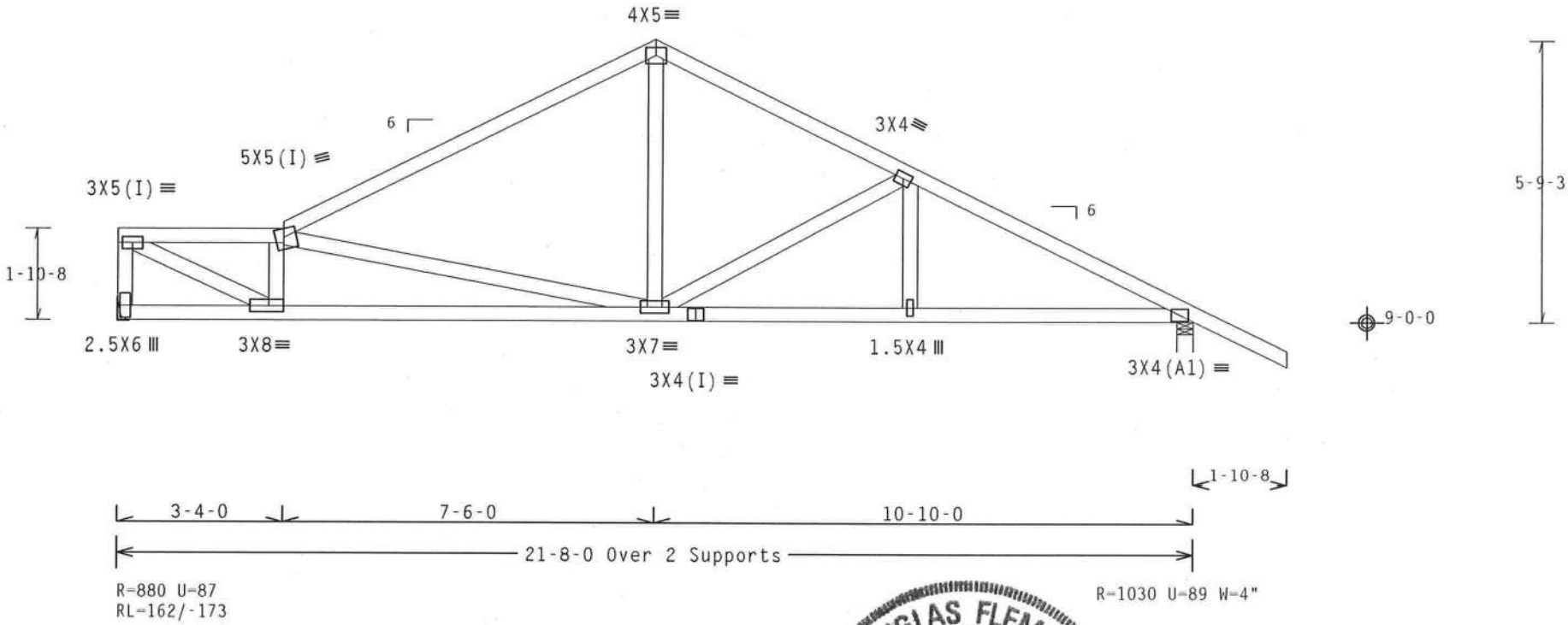

Design Crit: FBC2007Res/TPI-2002(STD)

PLT TYP. Wave FT/RT=20%(0%)/0(0) 9.02.03.0610.16 QTY 1 FL/-/4/-/-/R/- Scale =.3125"/Ft.

ALPINE
ITW Building Components Group Inc.
Haines City, FL 33844
FL COA #0 278

WARNING TRUSSES REQUIRE EXTREME CARE IN FABRICATION, HANDLING, SHIPPING, INSTALLING AND BRACING. REFER TO BCSI (BUILDING COMPONENT SAFETY INFORMATION), PUBLISHED BY TPI (TRUSS PLATE INSTITUTE, 218 NORTH LEE STREET, SUITE 312, ALEXANDRIA, VA, 22314) AND WTCA (WOOD TRUSS COUNCIL OF AMERICA, 6300 ENTERPRISE LANE, MADISON, WI 53719) FOR SAFETY PRACTICES PRIOR TO PERFORMING THESE FUNCTIONS. UNLESS OTHERWISE INDICATED TOP CHORD SHALL HAVE PROPERLY ATTACHED STRUCTURAL PANELS AND BOTTOM CHORD SHALL HAVE A PROPERLY ATTACHED RIGID CEILING.

IMPORTANTFURNISH A COPY OF THIS DESIGN TO THE INSTALLATION CONTRACTOR. ITW BCG, INC. SHALL NOT BE RESPONSIBLE FOR ANY DEVIATION FROM THIS DESIGN; ANY FAILURE TO BUILD THE TRUSS IN CONFORMANCE WITH TPI; OR FABRICATING, HANDLING, SHIPPING, INSTALLING & BRACING OF TRUSSES. DESIGN CONFORMS WITH APPLICABLE PROVISIONS OF NDS (NATIONAL DESIGN SPEC, BY AF&PA) AND TPI. ITW BCG CONNECTOR PLATES ARE MADE OF 20/18/16GA (W,H/SS/k) ASTM A653 GRADE 40/60 (W, K/H,SS) GALV. STEEL. APPLY PLATES TO EACH FACE OF TRUSS AND, UNLESS OTHERWISE LOCATED ON THIS DESIGN, POSITION PER DRAWINGS 1604 ANY INSPECTION OF PLATES FOLLOWED BY (1) SHALL BE PER ANNEX A3 OF TPI1-2002 SEC.3. A SEAL ON THIS DRAWING INDICATES ACCEPTANCE OF PROFESSIONAL ENGINEERING RESPONSIBILITY SOLELY FOR THE TRUSS COMPONENT DESIGN SHOWN. THE SUITABILITY AND USE OF THIS COMPONENT FOR ANY BUILDING IS THE RESPONSIBILITY OF THE BUILDING DESIGNER PER ANSI/TPI 1 SEC. 2.

DOUGLAS FLEMING LICENSE No. 66648 STATE OF FLORIDA PROFESSIONAL ENGINEER

10/14/2010

TC LL	20.0 PSF	REF	R487-- 3296
TC DL	10.0 PSF	DATE	10/14/10
BC DL	10.0 PSF	DRW	HCUSR487 10287013
BC LL	0.0 PSF	HC-ENG	TCE/DF
TOT.LD.	40.0 PSF	SEQN-	72810
DUR.FAC.	1.25	FROM	AH
SPACING	24.0"	JREF-	1U61487_Z01

(9-244--Fill in later EDGLEY -- , ** - D3)

Top chord 2x4 SP #2 Dense
Bot chord 2x4 SP #2 Dense
Webs 2x4 SP #3

Left end vertical not exposed to wind pressure.

Roof overhang supports 2.00 psf soffit load.

Bottom chord checked for 10.00 psf non-concurrent live load.

MWFRS loads based on trusses located at least 15.00 ft. from roof edge.

110 mph wind, 15.00 ft mean hgt, ASCE 7-05, CLOSED bldg, not located within 4.50 ft from roof edge, CAT II, EXP C, wind TC DL=5.0 psf, wind BC DL=5.0 psf. Iw=1.00 GCpi(+/-)=0.18

Wind reactions based on MWFRS pressures.

In lieu of structural panels use purlins to brace all flat TC @ 24" OC.

Deflection meets L/240 live and L/180 total load.

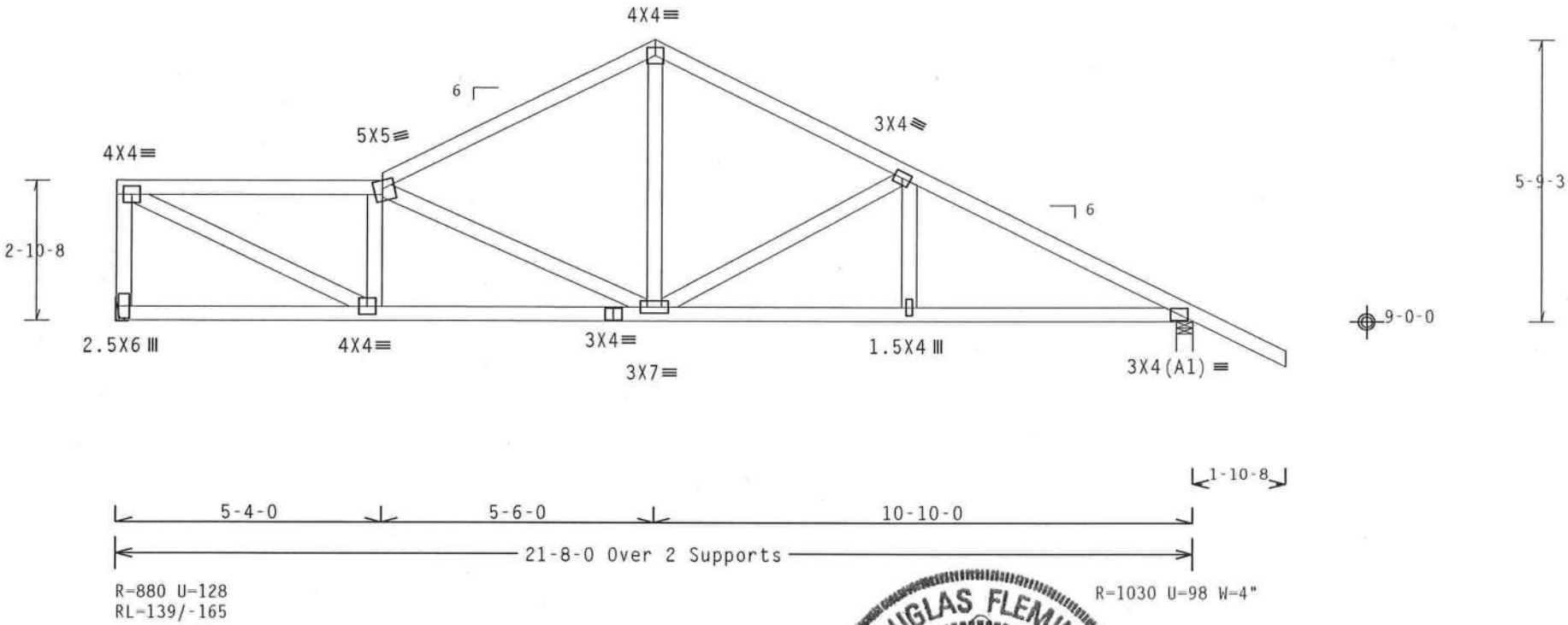

Design Crit: FBC2007Res/TPI-2002(STD)

PLT TYP. Wave FT/RT=20%(0%)/0(0) 9.02.03.0610.16 QTY: 1 FL/-/4/-/-/R/- Scale =.3125"/Ft.

ALPINE
ITW Building Components Group Inc.
Haines City, FL 33844
FL COA #0 278

WARNING TRUSSES REQUIRE EXTREME CARE IN FABRICATION, HANDLING, SHIPPING, INSTALLING AND BRACING. REFER TO BCSI (BUILDING COMPONENT SAFETY INFORMATION), PUBLISHED BY TPI (TRUSS PLATE INSTITUTE, 218 NORTH LEE STREET, SUITE 312, ALEXANDRIA, VA, 22314) AND WTCA (WOOD TRUSS COUNCIL OF AMERICA, 6300 ENTERPRISE LANE, MADISON, WI 53719) FOR SAFETY PRACTICES PRIOR TO PERFORMING THESE FUNCTIONS. UNLESS OTHERWISE INDICATED TOP CHORD SHALL HAVE PROPERLY ATTACHED STRUCTURAL PANELS AND BOTTOM CHORD SHALL HAVE A PROPERLY ATTACHED RIGID CEILING.

IMPORTANTFURNISH A COPY OF THIS DESIGN TO THE INSTALLATION CONTRACTOR. ITW BCG, INC. SHALL NOT BE RESPONSIBLE FOR ANY DEVIATION FROM THIS DESIGN; ANY FAILURE TO BUILD THE TRUSS IN COMFORMANCE WITH TPI; OR FABRICATING, HANDLING, SHIPPING, INSTALLING & BRACING OF TRUSSES. DESIGN CONFORMS WITH APPLICABLE PROVISIONS OF NDS (NATIONAL DESIGN SPEC. BY AF&PA) AND TPI. ITW BCG CONNECTOR PLATES ARE MADE OF 20/18/16GA (W,H/SS/K) ASTM A653 GRADE 40/60 (W, K/H,SS) GALV. STEEL. APPLY PLATES TO EACH FACE OF TRUSS AND, UNLESS OTHERWISE LOCATED ON THIS DESIGN, POSITION PER DRAWINGS 160A-Z. ANY INSPECTION OF PLATES FOLLOWED BY (1) SHALL BE PER ANNEX A3 OF TPI1-2002 SEC.3. A SEAL ON THIS DRAWING INDICATES ACCEPTANCE OF PROFESSIONAL ENGINEERING RESPONSIBILITY SOLELY FOR THE TRUSS COMPONENT DESIGN SHOWN. THE SUITABILITY AND USE OF THIS COMPONENT FOR ANY BUILDING IS THE RESPONSIBILITY OF THE BUILDING DESIGNER PER ANSI/TPI 1 SEC. 2.

DOUGLAS FLEMING LICENSE No. 66648 STATE OF FLORIDA PROFESSIONAL ENGINEER
10/14/2010

TC LL	20.0 PSF	REF	R487-- 3297
TC DL	10.0 PSF	DATE	10/14/10
BC DL	10.0 PSF	DRW	HCUSR487 10287035
BC LL	0.0 PSF	HC-ENG	TCE/DF
TOT.LD.	40.0 PSF	SEQN-	72818
DUR.FAC.	1.25	FROM	AH
SPACING	24.0"	JREF-	1U61487_Z01

(9-244--Fill in later EDGLEY -- , ** - D2)

Top chord 2x4 SP #2 Dense
Bot chord 2x4 SP #2 Dense
Webs 2x4 SP #3

Left end vertical not exposed to wind pressure.

Roof overhang supports 2.00 psf soffit load.

Bottom chord checked for 10.00 psf non-concurrent live load.

MWFRS loads based on trusses located at least 7.50 ft. from roof edge.

110 mph wind, 15.00 ft mean hgt, ASCE 7-05, CLOSED bldg, not located within 4.50 ft from roof edge, CAT II, EXP C, wind TC DL=5.0 psf, wind BC DL=5.0 psf. Iw=1.00 GCpi(+/-)=0.18

Wind reactions based on MWFRS pressures.

In lieu of structural panels use purlins to brace all flat TC @ 24" OC.

Deflection meets L/240 live and L/180 total load.

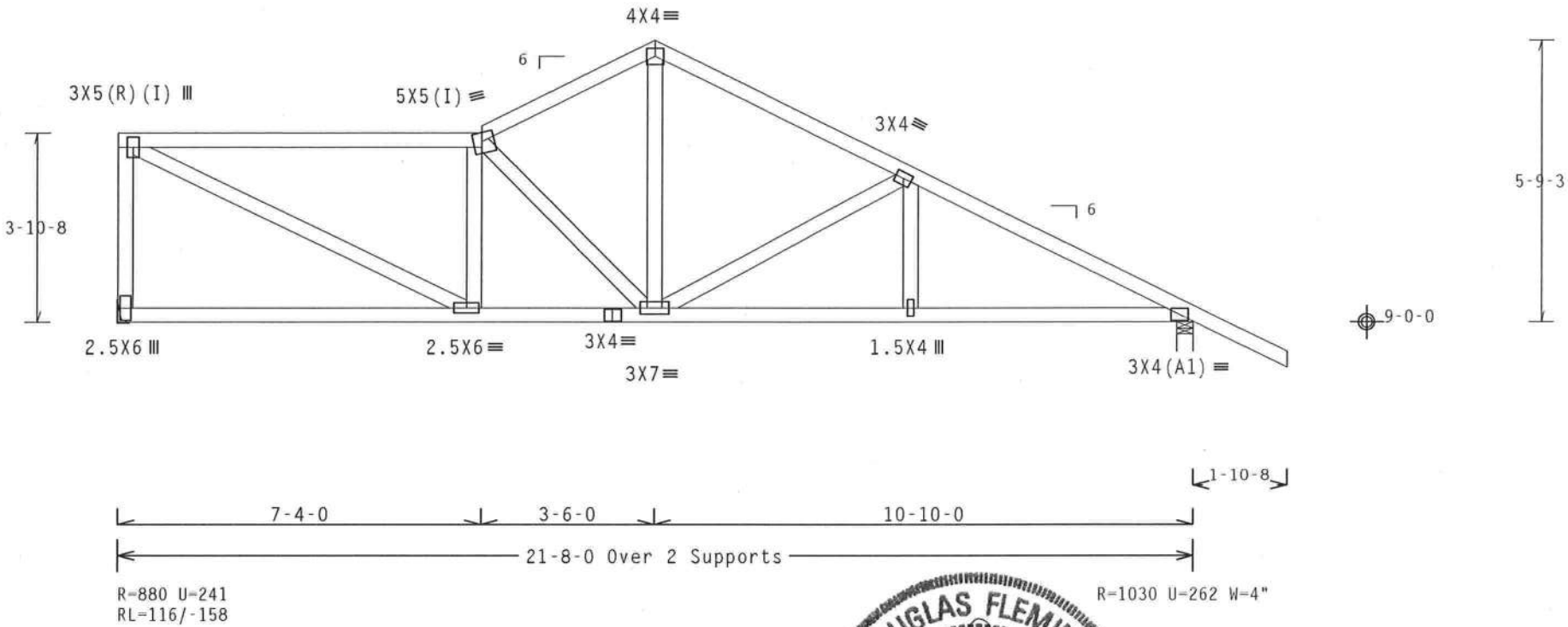

Design Crit: FBC2007Res/TPI-2002(STD)
FT/RT=20%(0%)/0(0)

PLT TYP. Wave

09.02.03.0610.16 QTY:

FL/-/4/-/-/R/-

Scale =.3125"/Ft.

ALPINE
ITW Building Components Group Inc.
Haines City, FL 33844
FL COA #0 278

WARNING TRUSSES REQUIRE EXTREME CARE IN FABRICATION, HANDLING, SHIPPING, INSTALLING AND BRACING. REFER TO BCSI (BUILDING COMPONENT SAFETY INFORMATION), PUBLISHED BY TPI (TRUSS PLATE INSTITUTE, 218 NORTH LEE STREET, SUITE 312, ALEXANDRIA, VA, 22314) AND WTCA (WOOD TRUSS COUNCIL OF AMERICA, 6300 ENTERPRISE LANE, MADISON, WI 53719) FOR SAFETY PRACTICES PRIOR TO PERFORMING THESE FUNCTIONS. UNLESS OTHERWISE INDICATED TOP CHORD SHALL HAVE PROPERLY ATTACHED STRUCTURAL PANELS AND BOTTOM CHORD SHALL HAVE A PROPERLY ATTACHED RIGID CEILING.

IMPORTANTFURNISH A COPY OF THIS DESIGN TO THE INSTALLATION CONTRACTOR. ITW BCG, INC. SHALL NOT BE RESPONSIBLE FOR ANY DEVIATION FROM THIS DESIGN; ANY FAILURE TO BUILD THE TRUSS IN CONFORMANCE WITH TPI1; OR FABRICATING, HANDLING, SHIPPING, INSTALLING & BRACING OF TRUSSES. DESIGN CONFORMS WITH APPLICABLE PROVISIONS OF NDS (NATIONAL DESIGN SPEC, BY AF&PA) AND TPI. ITW CONNECTOR PLATES ARE MADE OF 20/18/16GA (W,H/SS/K) ASTM A653 GRADE 40/60 (W, K/H,SS) GALV. STEEL. APPLY PLATES TO EACH FACE OF TRUSS AND, UNLESS OTHERWISE LOCATED ON THIS DESIGN, POSITION PER DRAWINGS 160A-2. ANY INSPECTION OF PLATES FOLLOWED BY (1) SHALL BE PER ANNEX A3 OF TPI1-2002 SEC.3. A SEAL ON THIS DRAWING INDICATES ACCEPTANCE OF PROFESSIONAL ENGINEERING RESPONSIBILITY SOLELY FOR THE TRUSS COMPONENT DESIGN SHOWN. THE SUITABILITY AND USE OF THIS COMPONENT FOR ANY BUILDING IS THE RESPONSIBILITY OF THE BUILDING DESIGNER PER ANSI/TPI 1 SEC. 2.

DOUGLAS FLEMING LICENSE No. 66648 STATE OF FLORIDA PROFESSIONAL ENGINEER

10/14/2010

TC LL	20.0 PSF	REF R487-- 3298
TC DL	10.0 PSF	DATE 10/14/10
BC DL	10.0 PSF	DRW HCUSR487 10287034
BC LL	0.0 PSF	HC-ENG TCE/DF
TOT.LD.	40.0 PSF	SEQN- 72826
DUR.FAC.	1.25	FROM AH
SPACING	24.0"	JREF- 1U61487_Z01

(9-244--Fill in later EDGLEY -- , ** - D1)

Top chord 2x4 SP #2 Dense
Bot chord 2x4 SP #2 Dense
Webs 2x4 SP #3

Left end vertical not exposed to wind pressure.

Roof overhang supports 2.00 psf soffit load.

Max JT VERT DEFL: LL: 0.11" DL: 0.15" recommended camber 1/4"

Bottom chord checked for 10.00 psf non-concurrent live load.

Deflection meets L/240 live and L/180 total load.

(**) 1 plate(s) require special positioning. Refer to scaled plate plot details for special positioning requirements.

110 mph wind, 15.00 ft mean hgt, ASCE 7-05, CLOSED bldg, not located within 4.50 ft from roof edge, CAT II, EXP C, wind TC DL=5.0 psf, wind BC DL=5.0 psf. Iw=1.00 GCpi(+/-)=0.18

Wind reactions based on MWFRS pressures.

In lieu of structural panels use purlins to brace all flat TC @ 24" OC.

MWFRS loads based on trusses located at least 7.50 ft. from roof edge.

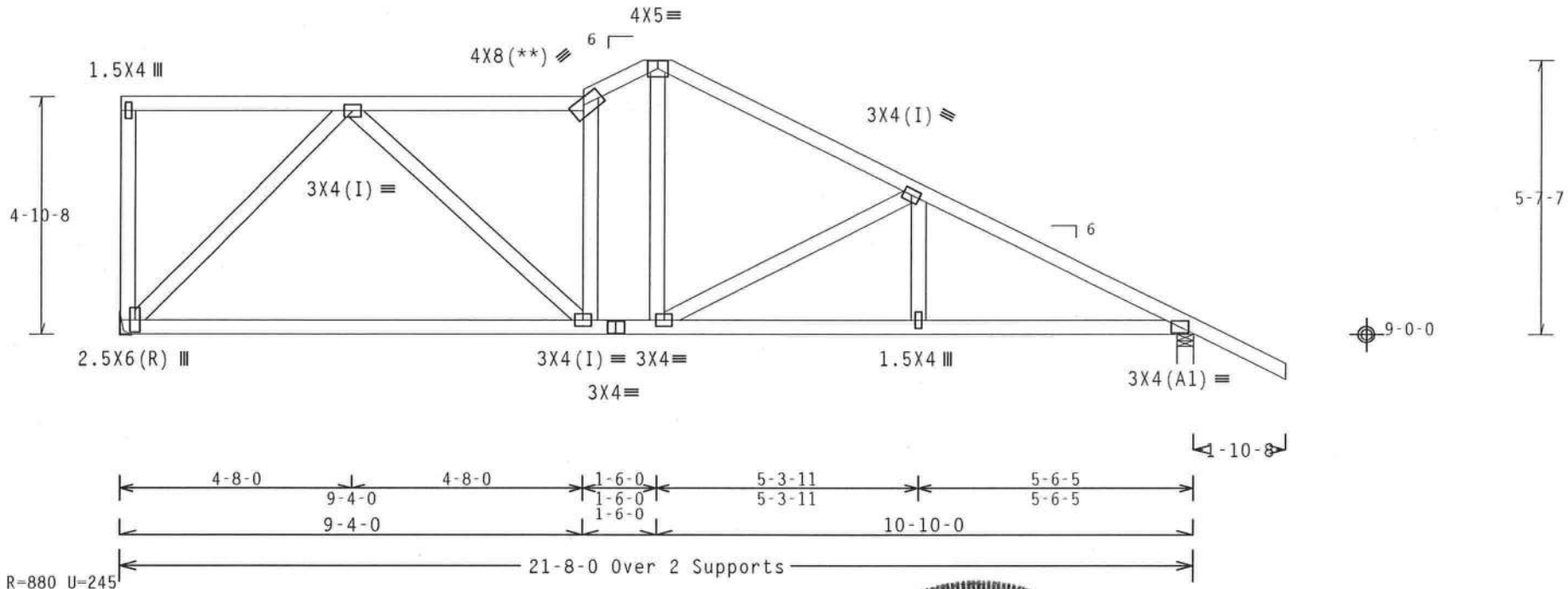

R=880 U=245
RL=90/-192 H=Simpson LU26
w/ (4) 10d, 0.148"x1.5" nails in Truss
w/ (6) 16d Common, 0.162"x3.5" nails in Girder
Supporting Member is (2)2x6 SP #2

R=1030 U=252 W=4"

Design Crit: FBC2007Res/TPI-2002(STD)

PLT TYP. Wave FT/RT=20%(0%)/0(0) 9.05.03.0319.17 QTY: 1 FL/-/4/-/-/R/- Scale =.3125"/Ft.

ALPINE
ITW Building Components Group Inc.
Haines City, FL 33844
FL COA #0 278

WARNING TRUSSES REQUIRE EXTREME CARE IN FABRICATION, HANDLING, SHIPPING, INSTALLING AND BRACING. REFER TO BCSI (BUILDING COMPONENT SAFETY INFORMATION), PUBLISHED BY TPI (TRUSS PLATE INSTITUTE, 216 NORTH LEE STREET, SUITE 312, ALEXANDRIA, VA, 22314) AND WTCA (WOOD TRUSS COUNCIL OF AMERICA, 6300 ENTERPRISE LANE, MADISON, WI 53719) FOR SAFETY PRACTICES PRIOR TO PERFORMING THESE FUNCTIONS. UNLESS OTHERWISE INDICATED TOP CHORD SHALL HAVE PROPERLY ATTACHED STRUCTURAL PANELS AND BOTTOM CHORD SHALL HAVE A PROPERLY ATTACHED RIGID CEILING.

IMPORTANTFURNISH A COPY OF THIS DESIGN TO THE INSTALLATION CONTRACTOR. ITW BCG, INC. SHALL NOT BE RESPONSIBLE FOR ANY DEVIATION FROM THIS DESIGN; ANY FAILURE TO BUILD THE TRUSS IN COMFORMANCE WITH TPI; OR FABRICATING, HANDLING, SHIPPING, INSTALLING & BRACING OF TRUSSES. DESIGN CONFORMS WITH APPLICABLE PROVISIONS OF NDS (NATIONAL DESIGN SPEC, BY AF&PA) AND TPI. ITW BCG CONNECTOR PLATES ARE MADE OF 20/18/16GA (W,H/SS/K) ASTM A653 GRADE 40/60 (W, K/H,SS) GALV. STEEL. APPLY PLATES TO EACH FACE OF TRUSS AND, UNLESS OTHERWISE LOCATED ON THIS DESIGN, POSITION PER DRAWINGS 160A-Z. ANY INSPECTION OF PLATES FOLLOWED BY (1) SHALL BE PER ANNEX A3 OF TPI1-2002 SEC.3. A SEAL ON THIS DRAWING INDICATES ACCEPTANCE OF PROFESSIONAL ENGINEERING RESPONSIBILITY SOLELY FOR THE TRUSS COMPONENT DESIGN SHOWN. THE SUITABILITY AND USE OF THIS COMPONENT FOR ANY BUILDING IS THE RESPONSIBILITY OF THE BUILDING DESIGNER PER ANSI/TPI 1 SEC. 2.

DOUGLAS FLEMING LICENSE No. 66648 STATE OF FLORIDA PROFESSIONAL ENGINEER
10/14/2010

TC LL	20.0 PSF	REF	R487-- 3299
TC DL	10.0 PSF	DATE	10/14/10
BC DL	10.0 PSF	DRW	HCUSR487 10287040
BC LL	0.0 PSF	HC-ENG	KD/DF
TOT.LD.	40.0 PSF	SEQN-	151138
DUR.FAC.	1.25	FROM	AH
SPACING	24.0"	JREF-	1U61487_Z01

(9-244--Fill in later EDGLEY -- , ** - HM9D)

Top chord 2x4 SP #2 Dense
Bot chord 2x4 SP #2 Dense
Webs 2x4 SP #3

Roof overhang supports 2.00 psf soffit load.

(A) 1x4 #3SRB SPF-S or better "T" brace. 80% length of web member. Attach with 8d Box or Gun (0.113"x2.5",min.)nails @ 6" OC.

Bottom chord checked for 10.00 psf non-concurrent live load.

Deflection meets L/240 live and L/180 total load.

110 mph wind, 15.00 ft mean hgt, ASCE 7-05, CLOSED bldg, not located within 4.50 ft from roof edge, CAT II, EXP C, wind TC DL=5.0 psf, wind BC DL=5.0 psf. Iw=1.00 GCpi(+/-)=0.18

Wind reactions based on MWFRS pressures.

Right end vertical not exposed to wind pressure.

In lieu of structural panels use purlins to brace all flat TC @ 24" OC.

MWFRS loads based on trusses located at least 7.50 ft. from roof edge.

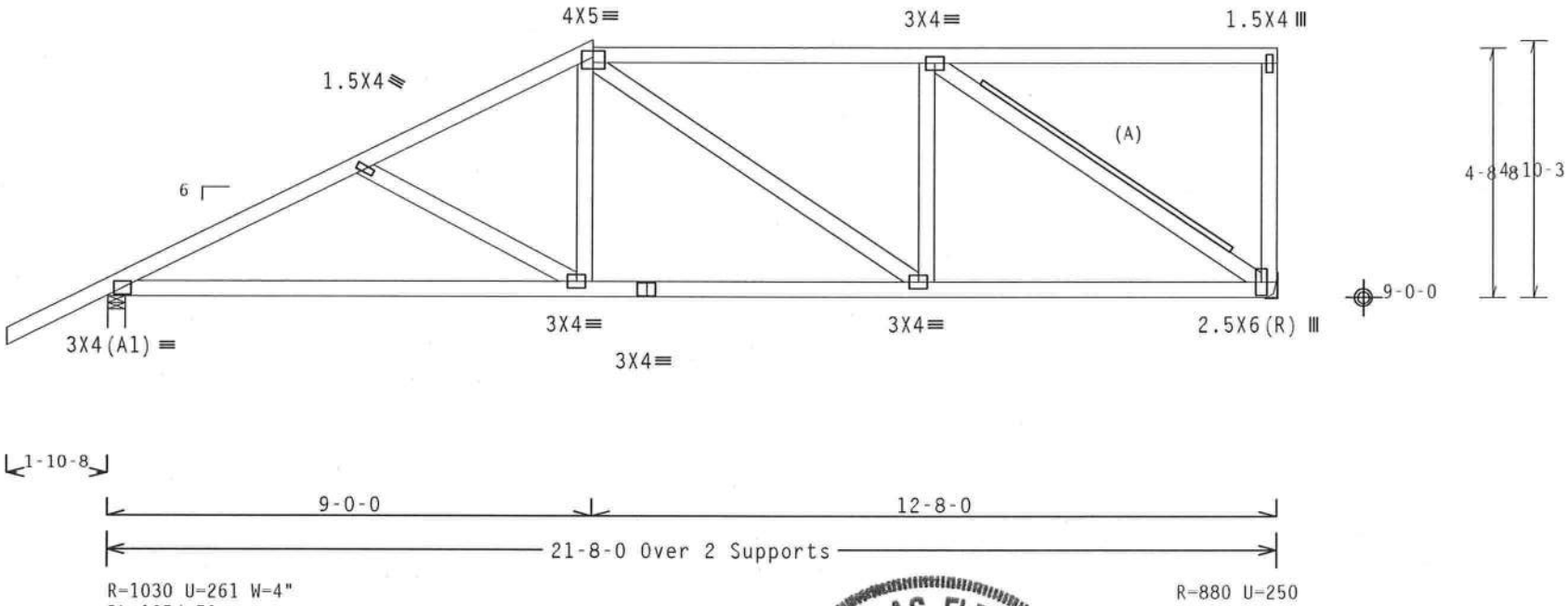

Design Crit: FBC2007Res/TPI-2002(STD)

PLT TYP. Wave FT/RT=20%(0%)/0(0) 9.02.03.0610.16 QTY 1 FL/-/4/-/-/R/- Scale =.3125"/Ft.

ALPINE
ITW Building Components Group Inc.
Haines City, FL 33844
FL COA #0 278

WARNING TRUSSES REQUIRE EXTREME CARE IN FABRICATION, HANDLING, SHIPPING, INSTALLING AND BRACING. REFER TO BCSI (BUILDING COMPONENT SAFETY INFORMATION), PUBLISHED BY TPI (TRUSS PLATE INSTITUTE, 218 NORTH LEE STREET, SUITE 312, ALEXANDRIA, VA. 22314) AND WTCA (WOOD TRUSS COUNCIL OF AMERICA, 6300 ENTERPRISE LANE, MADISON, WI 53719) FOR SAFETY PRACTICES PRIOR TO PERFORMING THESE FUNCTIONS. UNLESS OTHERWISE INDICATED TOP CHORD SHALL HAVE PROPERLY ATTACHED STRUCTURAL PANELS AND BOTTOM CHORD SHALL HAVE A PROPERLY ATTACHED RIGID CEILING.

IMPORTANTFURNISH A COPY OF THIS DESIGN TO THE INSTALLATION CONTRACTOR. ITW BCG, INC. SHALL NOT BE RESPONSIBLE FOR ANY DEVIATION FROM THIS DESIGN; ANY FAILURE TO BUILD THE TRUSS IN CONFORMANCE WITH TPI; OR FABRICATING, HANDLING, SHIPPING, INSTALLING & BRACING OF TRUSSES. DESIGN CONFORMS WITH APPLICABLE PROVISIONS OF NDS (NATIONAL DESIGN SPEC, BY AF&PA) AND TPI. ITW BCG CONNECTOR PLATES ARE MADE OF 20/18/16GA (W,H/SS/K) ASTM A653 GRADE 40/60 (W, K/H,SS) GALV. STEEL. APPLY PLATES TO EACH FACE OF TRUSS AND, UNLESS OTHERWISE LOCATED ON THIS DESIGN, POSITION PER DRAWINGS 160A. ANY INSPECTION OF PLATES FOLLOWED BY (1) SHALL BE PER ANNEX A3 OF TPI1-2002 SEC.3. A SEAL ON THIS DRAWING INDICATES ACCEPTANCE OF PROFESSIONAL ENGINEERING RESPONSIBILITY SOLELY FOR THE TRUSS COMPONENT DESIGN SHOWN. THE SUITABILITY AND USE OF THIS COMPONENT FOR ANY BUILDING IS THE RESPONSIBILITY OF THE BUILDING DESIGNER PER ANSI/TPI 1 SEC. 2.

DOUGLAS FLEMING LICENSE No. 66648 STATE OF FLORIDA PROFESSIONAL ENGINEER

10/14/2010

TC LL	20.0 PSF	REF	R487-- 3300
TC DL	10.0 PSF	DATE	10/14/10
BC DL	10.0 PSF	DRW	HCUSR487 10287038
BC LL	0.0 PSF	HC-ENG	TCE/DF
TOT.LD.	40.0 PSF	SEQN-	68221
DUR.FAC.	1.25	FROM	AH
SPACING	24.0"	JREF-	1U61487_Z01

(9-244--Fill in later EDGLEY -- , ** - E)

THIS DWG PREPARED FROM COMPUTER INPUT (LOADS & DIMENSIONS) SUBMITTED BY TRUSS MFR.

Top chord 2x4 SP #2 Dense
Bot chord 2x4 SP #2 Dense
Webs 2x4 SP #3

Roof overhang supports 2.00 psf soffit load.

Bottom chord checked for 10.00 psf non-concurrent live load.

MWFRS loads based on trusses located at least 15.00 ft. from roof edge.

110 mph wind, 15.00 ft mean hgt, ASCE 7-05, CLOSED bldg, not located within 4.50 ft from roof edge, CAT II, EXP C, wind TC DL=5.0 psf, wind BC DL=5.0 psf. Iw=1.00 GCpi(+/-)=0.18

Wind reactions based on MWFRS pressures.

Deflection meets L/240 live and L/180 total load.

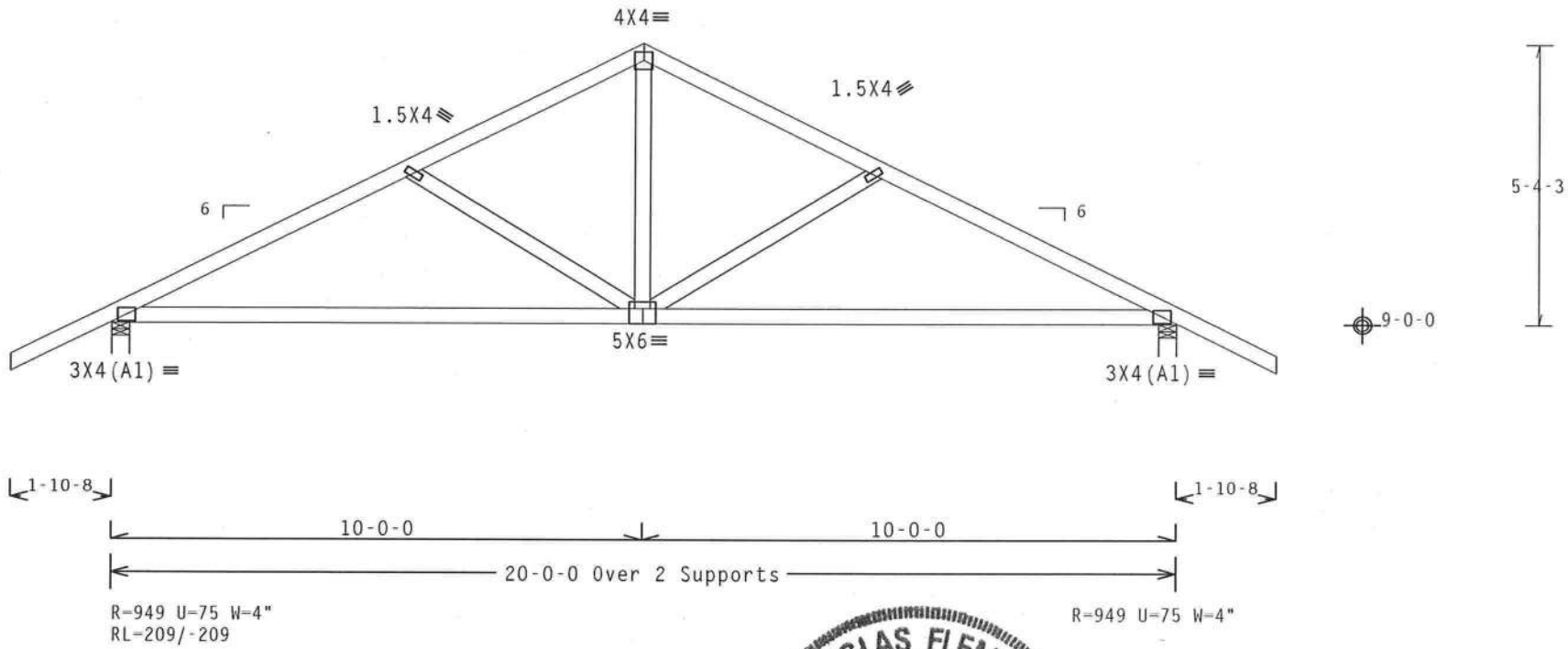

Design Crit: FBC2007Res/TPI-2002(STD)

PLT TYP. Wave | FT/RT=20%(0%)/0(0) | 9.04.03.0610.16 | QTY 2 | FL/-/4/-/-/R/- | Scale =.3125"/Ft.

ALPINE
ITW Building Components Group Inc.
Haines City, FL 33844
FL COA #0 278

WARNING TRUSSES REQUIRE EXTREME CARE IN FABRICATION, HANDLING, SHIPPING, INSTALLING AND BRACING. REFER TO BCSI (BUILDING COMPONENT SAFETY INFORMATION), PUBLISHED BY TPI (TRUSS PLATE INSTITUTE, 218 NORTH LEE STREET, SUITE 312, ALEXANDRIA, VA. 22314) AND WTCA (WOOD TRUSS COUNCIL OF AMERICA, 6300 ENTERPRISE LANE, MADISON, WI 53719) FOR SAFETY PRACTICES PRIOR TO PERFORMING THESE FUNCTIONS. UNLESS OTHERWISE INDICATED TOP CHORD SHALL HAVE PROPERLY ATTACHED STRUCTURAL PANELS AND BOTTOM CHORD SHALL HAVE A PROPERLY ATTACHED RIGID CEILING.

IMPORTANTFURNISH A COPY OF THIS DESIGN TO THE INSTALLATION CONTRACTOR. ITW BCG, INC. SHALL NOT BE RESPONSIBLE FOR ANY DEVIATION FROM THIS DESIGN; ANY FAILURE TO BUILD THE TRUSS IN CONFORMANCE WITH TPI; OR FABRICATING, HANDLING, SHIPPING, INSTALLING & BRACING OF TRUSSES. DESIGN CONFORMS WITH APPLICABLE PROVISIONS OF NDS (NATIONAL DESIGN SPEC, BY AF&PA) AND TPI. CONNECTOR PLATES ARE MADE OF 20/18/16GA (W,H/SS/K) ASTM A653 GRADE 40/60 (W, K/H,SS) GALV. STEEL. APPLY PLATES TO EACH FACE OF TRUSS AND, UNLESS OTHERWISE LOCATED ON THIS DESIGN, POSITION PER DRAWINGS 160 ANY INSPECTION OF PLATES FOLLOWED BY (1) SHALL BE PER ANNEX A3 OF TPI1-2002 SEC.3. A SEAL ON THIS DRAWING INDICATES ACCEPTANCE OF PROFESSIONAL ENGINEERING RESPONSIBILITY SOLELY FOR THE TRUSS COMPONENT DESIGN SHOWN. THE SUITABILITY AND USE OF THIS COMPONENT FOR ANY BUILDING IS THE RESPONSIBILITY OF THE BUILDING DESIGNER PER ANSI/TPI 1 SEC. 2.

DOUGLAS FLEMING LICENSE No. 66648 STATE OF FLORIDA PROFESSIONAL ENGINEER
10/14/2010

TC LL	20.0 PSF	REF	R487-- 3301
TC DL	10.0 PSF	DATE	10/14/10
BC DL	10.0 PSF	DRW	HCUSR487 10287019
BC LL	0.0 PSF	HC-ENG	TCE/DF *
TOT.LD.	40.0 PSF	SEQN-	68291
DUR.FAC.	1.25	FROM	AH
SPACING	24.0"	JREF-	1U61487_Z01

THIS DWG PREPARED FROM COMPUTER INPUT (LOADS & DIMENSIONS) SUBMITTED BY TRUSS MFR.

(9-244--Fill in later EDGLEY -- , ** - EG2)

Top chord 2x4 SP #2 Dense
Bot chord 2x6 SP #2
Webs 2x4 SP #3

Special loads
------(Lumber Dur.Fac.=1.25 / Plate Dur.Fac.=1.25)
TC- From 62 plf at 0.00 to 62 plf at 10.00
TC- From 62 plf at 10.00 to 62 plf at 21.88
BC- From 20 plf at 0.00 to 20 plf at 20.00
BC- From 4 plf at 20.00 to 4 plf at 21.88
BC- 879.89 lb Conc. Load at 1.40, 3.40, 5.40, 7.40 9.40,10.94
BC- 1839.12 lb Conc. Load at 12.94

Roof overhang supports 2.00 psf soffit load.

2 COMPLETE TRUSSES REQUIRED

Nail Schedule:0.131"x3" nails
Top Chord: 1 Row @12.00" o.c.
Bot Chord: 1 Row @ 4.25" o.c.
Webs : 1 Row @ 4" o.c.
Use equal spacing between rows and stagger nails in each row to avoid splitting.

110 mph wind, 15.00 ft mean hgt, ASCE 7-05, CLOSED bldg, not located within 4.50 ft from roof edge, CAT II, EXP C, wind TC DL=5.0 psf, wind BC DL=5.0 psf. Iw=1.00 GCpi(+/-)=0.18

Wind reactions based on MWFRS pressures.

Deflection meets L/240 live and L/180 total load.

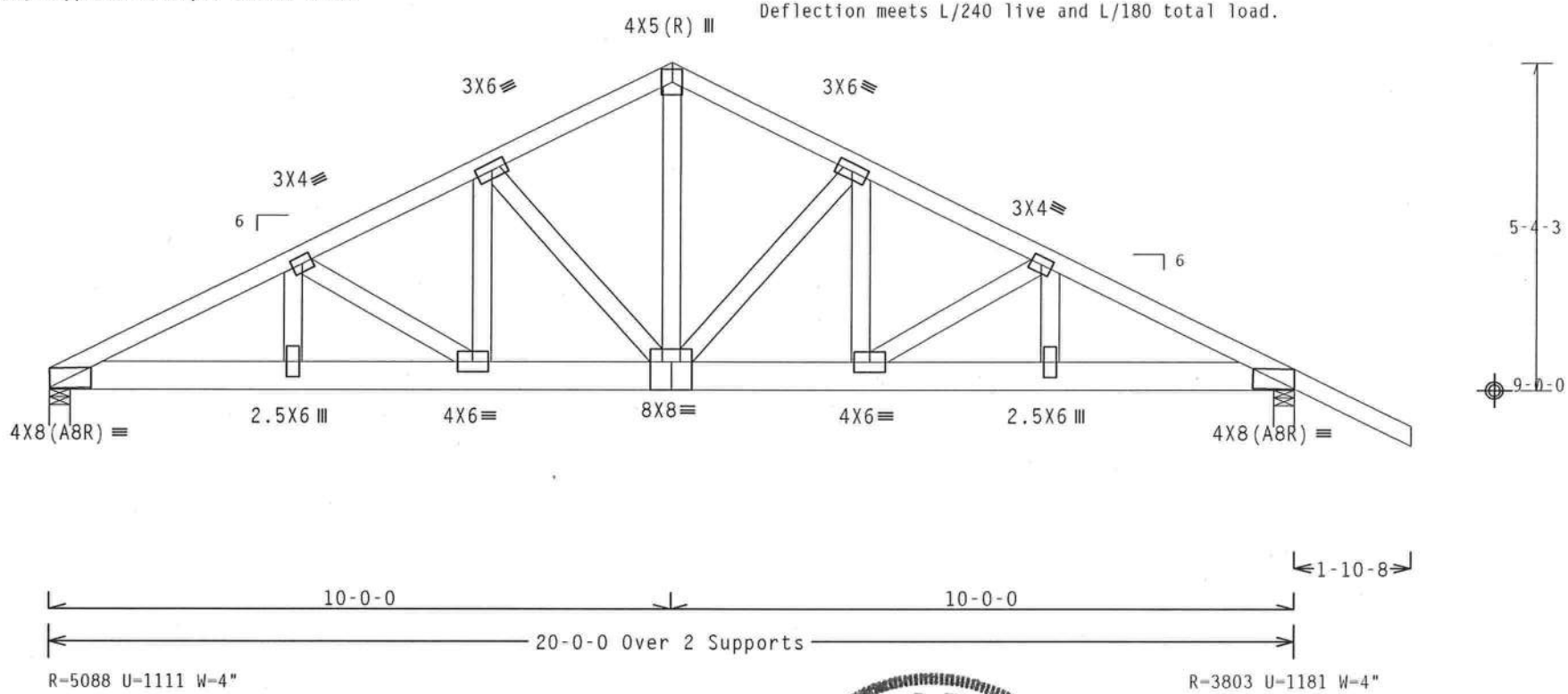

Design Crit: FBC2007Res/TPI-2002(STD)

PLT TYP. Wave FT/RT=20%(0%)/0(0) 9.0.03.0610.16 QTY 1 FL/-/4/-/-/R/- Scale =.375"/Ft.

ALPINE
ITW Building Components Group Inc.
Haines City, FL 33844
FL COA #0 278

WARNING TRUSSES REQUIRE EXTREME CARE IN FABRICATION, HANDLING, SHIPPING, INSTALLING AND BRACING. REFER TO BCSI (BUILDING COMPONENT SAFETY INFORMATION), PUBLISHED BY TPI (TRUSS PLATE INSTITUTE, 218 NORTH LEE STREET, SUITE 312, ALEXANDRIA, VA, 22314) AND WTCA (WOOD TRUSS COUNCIL OF AMERICA, 6300 ENTERPRISE LANE, MADISON, WI 53719) FOR SAFETY PRACTICES PRIOR TO PERFORMING THESE FUNCTIONS. UNLESS OTHERWISE INDICATED TOP CHORD SHALL HAVE PROPERLY ATTACHED STRUCTURAL PANELS AND BOTTOM CHORD SHALL HAVE A PROPERLY ATTACHED RIGID CEILING.

IMPORTANTFURNISH A COPY OF THIS DESIGN TO THE INSTALLATION CONTRACTOR. ITW BCG, INC. SHALL NOT BE RESPONSIBLE FOR ANY DEVIATION FROM THIS DESIGN; ANY FAILURE TO BUILD THE TRUSS IN CONFORMANCE WITH TPI; OR FABRICATING, HANDLING, SHIPPING, INSTALLING & BRACING OF TRUSSES. DESIGN CONFORMS WITH APPLICABLE PROVISIONS OF NDS (NATIONAL DESIGN SPEC, BY AF&PA) AND TPI. CONNECTOR PLATES ARE MADE OF 20/18/16GA (W,H/SS/K) ASTM A653 GRADE 40/60 (W, K/H,SS) GALV. STEEL. APPLY PLATES TO EACH FACE OF TRUSS AND, UNLESS OTHERWISE LOCATED ON THIS DESIGN, POSITION PER DRAWINGS 160 AND ANY INSPECTION OF PLATES FOLLOWED BY (1) SHALL BE PER ANNEX A3 OF TPI1-2002 SEC.3. A SEAL ON THIS DRAWING INDICATES ACCEPTANCE OF PROFESSIONAL ENGINEERING RESPONSIBILITY SOLELY FOR THE TRUSS COMPONENT DESIGN SHOWN. THE SUITABILITY AND USE OF THIS COMPONENT FOR ANY BUILDING IS THE RESPONSIBILITY OF THE BUILDING DESIGNER PER ANSI/TPI 1 SEC. 2.

DOUGLAS FLEMING LICENSE No. 66648 STATE OF FLORIDA PROFESSIONAL ENGINEER
10/14/2010

TC LL	20.0 PSF	REF	R487-- 3302
TC DL	10.0 PSF	DATE	10/14/10
BC DL	10.0 PSF	DRW	HCUSR487 10287025
BC LL	0.0 PSF	HC-ENG	TCE/DF
TOT.LD.	40.0 PSF	SEQN-	68299
DUR.FAC.	1.25	FROM	AH
SPACING	24.0"	JREF-	1U61487_Z01

(9-244--Fill in later EDGLEY -- , ** - EG1)

THIS DWG PREPARED FROM COMPUTER INPUT (LOADS & DIMENSIONS) SUBMITTED BY TRUSS MFR.

Top chord 2x4 SP #2 Dense
Bot chord 2x6 SP #2 :B2 2x6 SP SS:
Webs 2x4 SP #3 :W7 2x4 SP #2 Dense:
:Lt Wedge 2x4 SP #3::Rt Wedge 2x4 SP #3:

Special loads
------(Lumber Dur.Fac.=1.25 / Plate Dur.Fac.=1.25)
TC- From 62 plf at -1.88 to 62 plf at 10.00
TC- From 62 plf at 10.00 to 62 plf at 20.00
BC- From 4 plf at -1.88 to 4 plf at 0.00
BC- From 20 plf at 0.00 to 20 plf at 20.00
BC- 5373.73 lb Conc. Load at 12.73
BC- 1307.47 lb Conc. Load at 14.73
BC- 1362.37 lb Conc. Load at 16.73
BC- 1360.70 lb Conc. Load at 17.94

Roof overhang supports 2.00 psf soffit load.

Deflection meets L/240 live and L/180 total load.

2 COMPLETE TRUSSES REQUIRED

Nail Schedule:0.131"x3" nails
Top Chord: 1 Row @12.00" o.c.
Bot Chord: 1 Row @ 3.25" o.c.
Webs : 1 Row @ 4" o.c.
Use equal spacing between rows and stagger nails in each row to avoid splitting.
4" o.c. spacing of nails perpendicular and parallel to grain required in area over bearings greater than 4"

110 mph wind, 15.00 ft mean hgt, ASCE 7-05, CLOSED bldg, not located within 4.50 ft from roof edge, CAT II, EXP C, wind TC DL=5.0 psf, wind BC DL=5.0 psf. Iw=1.00 GCpi(+/-)=0.18

Wind reactions based on MWFRS pressures.

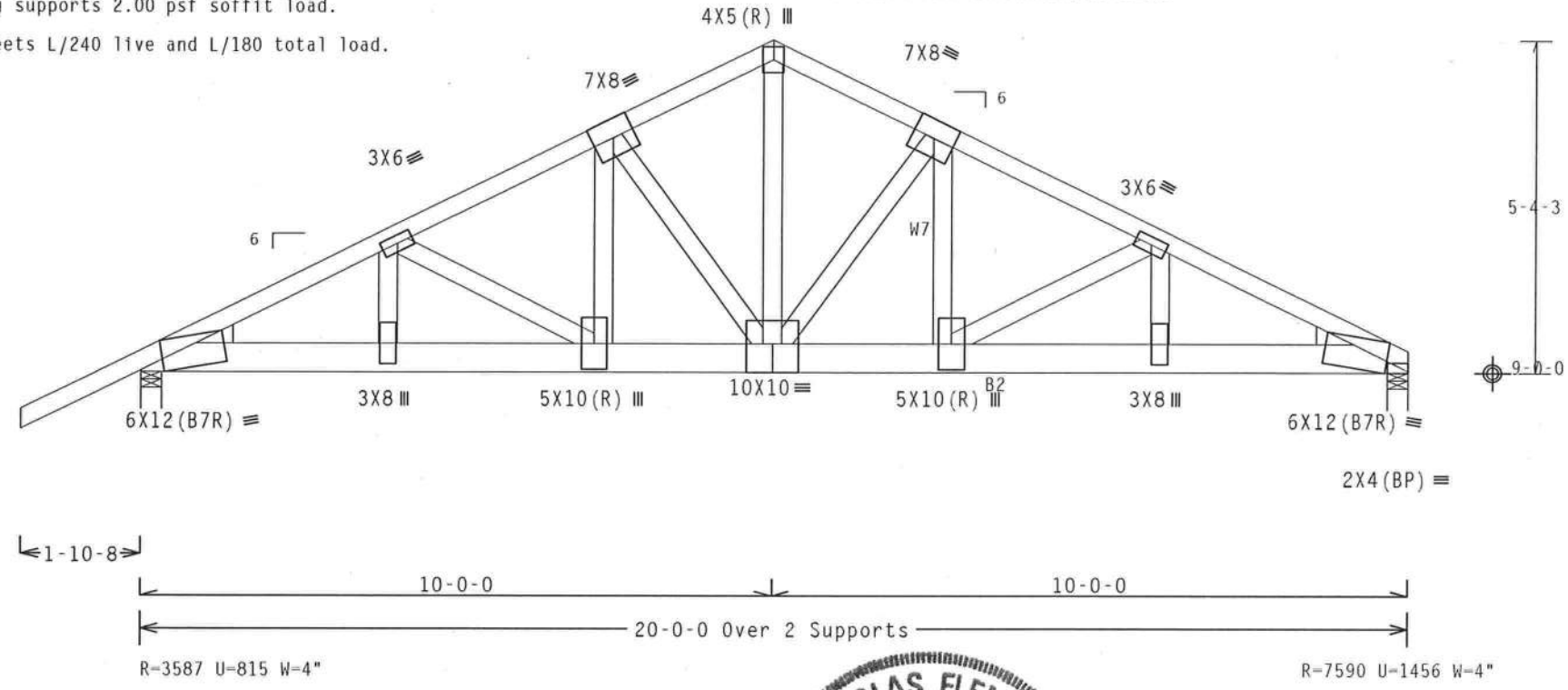

Design Crit: FBC2007Res/TPI-2002(STD)
FT/RT=20%(0%)/0(0) 9.02.03.0610.16

PLT TYP. Wave

QTY: FL/-/4/-/-/R/-

Scale =.375"/Ft.

ALPINE
ITW Building Components Group Inc.
Haines City, FL 33844
FL COA #0 278

WARNING TRUSSES REQUIRE EXTREME CARE IN FABRICATION, HANDLING, SHIPPING, INSTALLING AND BRACING. REFER TO BCSI (BUILDING COMPONENT SAFETY INFORMATION), PUBLISHED BY TPI (TRUSS PLATE INSTITUTE, 218 NORTH LEE STREET, SUITE 312, ALEXANDRIA, VA. 22314) AND WTCA (WOOD TRUSS COUNCIL OF AMERICA, 6300 ENTERPRISE LANE, MADISON, WI 53719) FOR SAFETY PRACTICES PRIOR TO PERFORMING THESE FUNCTIONS. UNLESS OTHERWISE INDICATED TOP CHORD SHALL HAVE PROPERLY ATTACHED STRUCTURAL PANELS AND BOTTOM CHORD SHALL HAVE A PROPERLY ATTACHED RIGID CEILING.

IMPORTANTFURNISH A COPY OF THIS DESIGN TO THE INSTALLATION CONTRACTOR. ITW BCG, INC. SHALL NOT BE RESPONSIBLE FOR ANY DEVIATION FROM THIS DESIGN; ANY FAILURE TO BUILD THE TRUSS IN CONFORMANCE WITH ANSI/TPI; OR FABRICATING, HANDLING, SHIPPING, INSTALLING & BRACING OF TRUSSES. DESIGN CONFORMS WITH APPLICABLE PROVISIONS OF NDS (NATIONAL DESIGN SPEC, BY AF&PA) AND TPI. ITW BCG CONNECTOR PLATES ARE MADE OF 20/18/16GA (W,H/SS/K) ASTM A653 GRADE 40/60 (W, K/H,SS) GALV. STEEL. APPLY PLATES TO EACH FACE OF TRUSS AND, UNLESS OTHERWISE LOCATED ON THIS DESIGN, POSITION PER DRAWINGS 160A. ANY INSPECTION OF PLATES FOLLOWED BY (1) SHALL BE PER ANNEX A3 OF TPI1-2002 SEC.3. A SEAL ON THIS DRAWING INDICATES ACCEPTANCE OF PROFESSIONAL ENGINEERING RESPONSIBILITY SOLELY FOR THE TRUSS COMPONENT DESIGN SHOWN. THE SUITABILITY AND USE OF THIS COMPONENT FOR ANY BUILDING IS THE RESPONSIBILITY OF THE BUILDING DESIGNER PER ANSI/TPI 1 SEC. 2.

DOUGLAS FLEMING LICENSE No. 66648 STATE OF FLORIDA PROFESSIONAL ENGINEER

10/14/2010

TC LL	20.0 PSF	REF	R487-- 3303
TC DL	10.0 PSF	DATE	10/14/10
BC DL	10.0 PSF	DRW	HCUSR487 10287031
BC LL	0.0 PSF	HC-ENG	TCE/DF
TOT.LD.	40.0 PSF	SEQN-	68305
DUR.FAC.	1.25	FROM	AH
SPACING	24.0"	JREF-	1U61487_Z01

(9-244--Fill in later EDGLEY -- , ** - HF2)

THIS DWG PREPARED FROM COMPUTER INPUT (LOADS & DIMENSIONS) SUBMITTED BY TRUSS MFR.

Top chord 2x4 SP #2 Dense
Bot chord 2x4 SP #2 Dense
Webs 2x4 SP #3

Note: This design is not to be used as a roof truss.
It is only to be used as a roof Hip Frame.
See detail HIPFRAME0109 for more information.

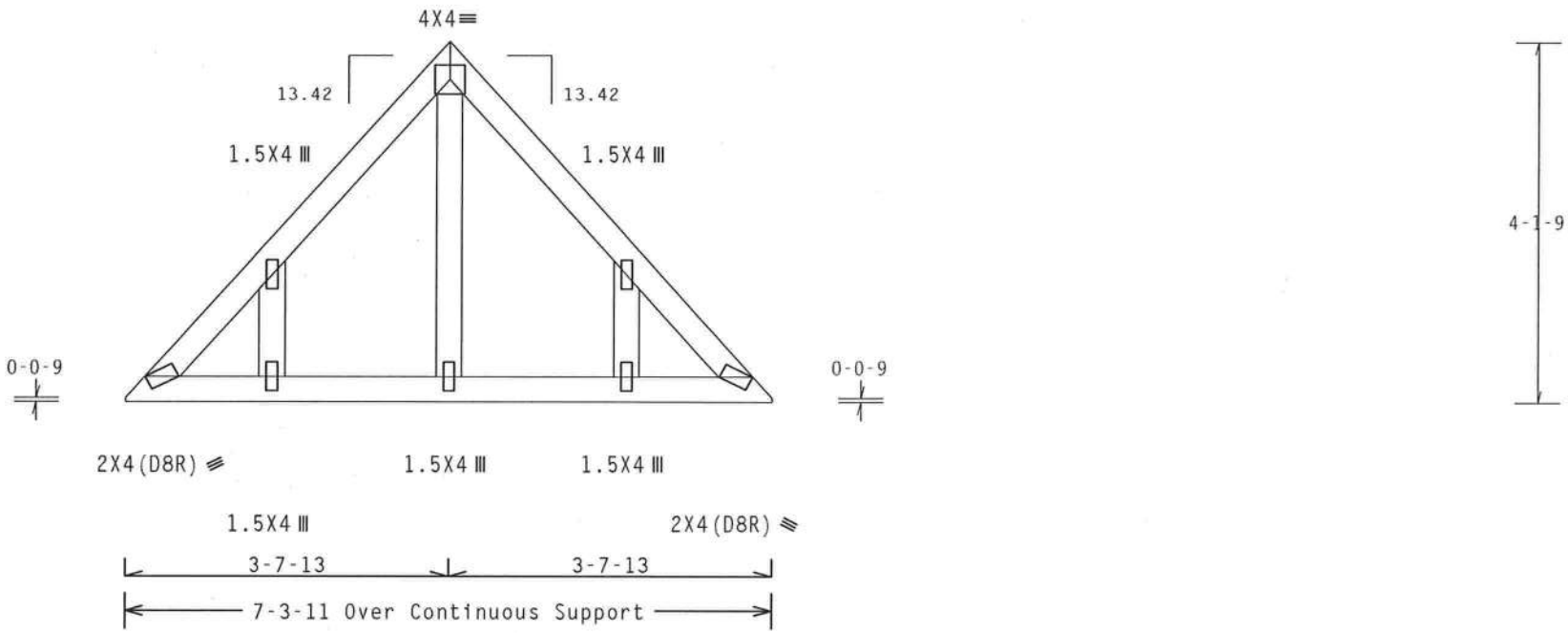

Design Crit: FBC2007Res/TPI-2002(STD)

PLT TYP. Wave FT/RT=20%(0%)/0(0) 9.02.03.0610.16 QTY 1 FL/-/4/-/-/R/- Scale =.5"/Ft.

ALPINE
ITW Building Components Group Inc.
Haines City, FL 33844
FL COA #0 278

WARNING TRUSSES REQUIRE EXTREME CARE IN FABRICATION, HANDLING, SHIPPING, INSTALLING AND BRACING. REFER TO BCSI (BUILDING COMPONENT SAFETY INFORMATION), PUBLISHED BY TPI (TRUSS PLATE INSTITUTE, 218 NORTH LEE STREET, SUITE 312, ALEXANDRIA, VA. 22314) AND WTCA (WOOD TRUSS COUNCIL OF AMERICA, 6300 ENTERPRISE LANE, MADISON, WI 53719) FOR SAFETY PRACTICES PRIOR TO PERFORMING THESE FUNCTIONS. UNLESS OTHERWISE INDICATED TOP CHORD SHALL HAVE PROPERLY ATTACHED STRUCTURAL PANELS AND BOTTOM CHORD SHALL HAVE A PROPERLY ATTACHED RIGID CEILING.

IMPORTANTFURNISH A COPY OF THIS DESIGN TO THE INSTALLATION CONTRACTOR. ITW BCG, INC. SHALL NOT BE RESPONSIBLE FOR ANY DEVIATION FROM THIS DESIGN; ANY FAILURE TO BUILD THE TRUSS IN CONFORMANCE WITH TPI; OR FABRICATING, HANDLING, SHIPPING, INSTALLING & BRACING OF TRUSSES. DESIGN CONFORMS WITH APPLICABLE PROVISIONS OF NDS (NATIONAL DESIGN SPEC. BY AF&PA) AND TPI. IT IS ASSUMED CONNECTOR PLATES ARE MADE OF 20/18/16GA (H,H/SS/K) ASTM A653 GRADE 40/60 (H, K/H,SS) GALV. STEEL. APPLY PLATES TO EACH FACE OF TRUSS AND, UNLESS OTHERWISE LOCATED ON THIS DESIGN, POSITION PER DRAWINGS 160[illegible]. ANY INSPECTION OF PLATES FOLLOWED BY (1) SHALL BE PER ANNEX A3 OF TPI1-2002 SEC.3. A SEAL ON THIS DRAWING INDICATES ACCEPTANCE OF PROFESSIONAL ENGINEERING RESPONSIBILITY SOLELY FOR THE TRUSS COMPONENT DESIGN SHOWN. THE SUITABILITY AND USE OF THIS COMPONENT FOR ANY BUILDING IS THE RESPONSIBILITY OF THE BUILDING DESIGNER PER ANSI/TPI 1 SEC. 2.

DOUGLAS FLEMING LICENSE No. 66648 STATE OF FLORIDA PROFESSIONAL ENGINEER

10/14/2010

TC LL	20.0 PSF	REF	R487-- 3304
TC DL	10.0 PSF	DATE	10/14/10
BC DL	10.0 PSF	DRW	HCUSR487 10287020
BC LL	0.0 PSF	HC-ENG	TCE/DF
TOT.LD.	40.0 PSF	SEQN-	68348
DUR.FAC.	1.25	FROM	AH
SPACING	24.0"	JREF-	1U61487_Z01

(9-244--Fill in later EDGLEY -- , ** - HF1)

THIS DWG PREPARED FROM COMPUTER INPUT (LOADS & DIMENSIONS) SUBMITTED BY TRUSS MFR.

Top chord 2x4 SP #2 Dense
Bot chord 2x4 SP #2 Dense
Webs 2x4 SP #3

Note: This design is not to be used as a roof truss.
It is only to be used as a roof Hip Frame.
See detail HIPFRAME0109 for more information.

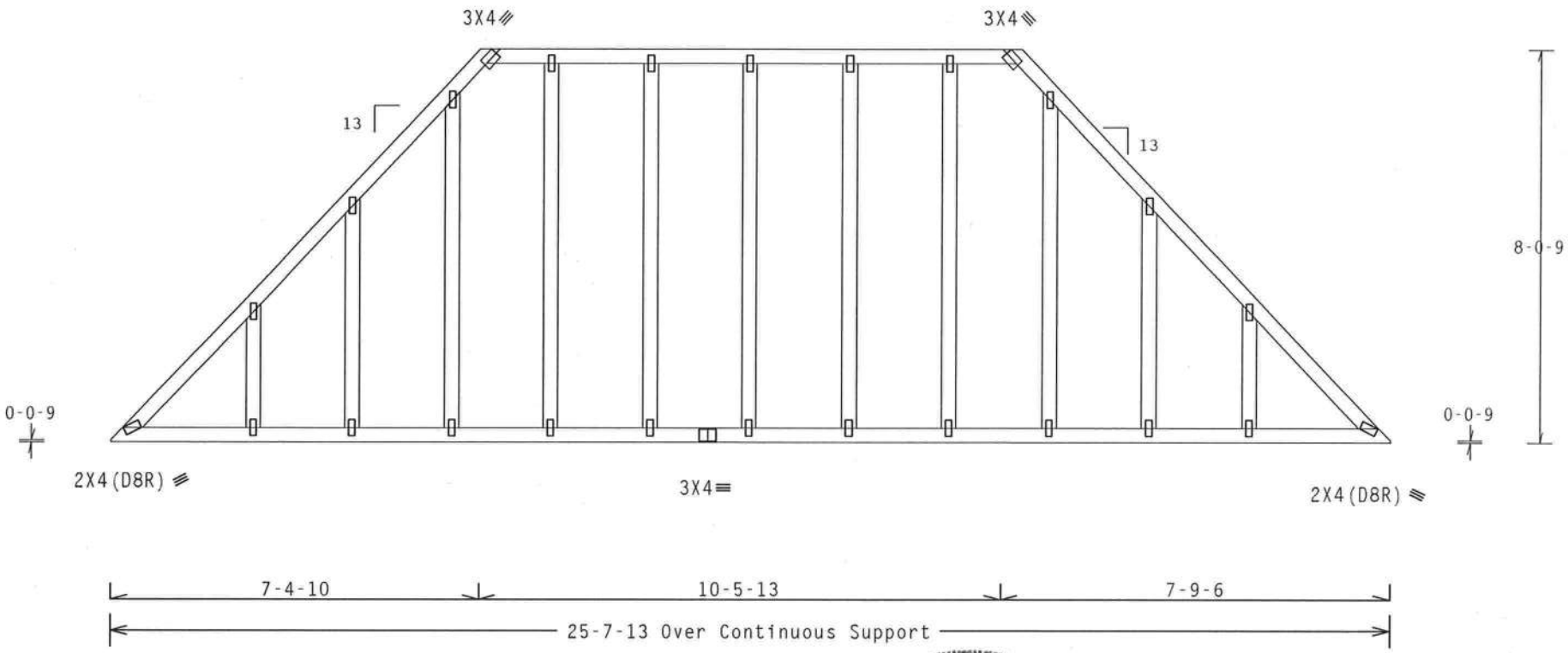

Note: All Plates Are 1.5X4 Except As Shown.

Design Crit: FBC2007Res/TPI-2002(STD)

PLT TYP. Wave FT/RT=20%(0%)/0(0) 9.02.03.0610.16 QTY: FL/-/4/-/-/R/- Scale =.3125"/Ft.

ALPINE
ITW Building Components Group Inc.
Haines City, FL 33844
FL COA #0 278

WARNING TPUSSES REQUIRE EXTREME CARE IN FABRICATION, HANDLING, SHIPPING, INSTALLING AND BRACING. REFER TO BCSI (BUILDING COMPONENT SAFETY INFORMATION), PUBLISHED BY TPI (TPUSS PLATE INSTITUTE, 218 NORTH LEE STREET, SUITE 312, ALEXANDRIA, VA. 22314) AND WTCA (WOOD TRUSS COUNCIL OF AMERICA, 6300 ENTERPRISE LANE, MADISON, WI 53719) FOR SAFETY PRACTICES PRIOR TO PERFORMING THESE FUNCTIONS. UNLESS OTHERWISE INDICATED TOP CHORD SHALL HAVE PROPERLY ATTACHED STRUCTURAL PANELS AND BOTTOM CHORD SHALL HAVE A PROPERLY ATTACHED RIGID CEILING.

IMPORTANTFURNISH A COPY OF THIS DESIGN TO THE INSTALLATION CONTRACTOR. ITW BCG, INC. SHALL NOT BE RESPONSIBLE FOR ANY DEVIATION FROM THIS DESIGN; ANY FAILURE TO BUILD THE TRUSS IN CONFORMANCE WITH TPI1; OR FABRICATING, HANDLING, SHIPPING, INSTALLING & BRACING OF TRUSSES. DESIGN CONFORMS WITH APPLICABLE PROVISIONS OF NDS (NATIONAL DESIGN SPEC. BY AF&PA) AND TPI. ITW BCG CONNECTOR PLATES ARE MADE OF 20/18/16GA (W,H/SS/X) ASTM A653 GRADE 40/60 (W, X/H,SS) GALV. STEEL. APPLY PLATES TO EACH FACE OF TRUSS AND, UNLESS OTHERWISE LOCATED ON THIS DESIGN, POSITION PER DRAWINGS 160A-3. ANY INSPECTION OF PLATES FOLLOWED BY (1) SHALL BE PER ANNEX A3 OF TPI1-2002 SEC.3. A SEAL ON THIS DRAWING INDICATES ACCEPTANCE OF PROFESSIONAL ENGINEERING RESPONSIBILITY SOLELY FOR THE TRUSS COMPONENT DESIGN SHOWN. THE SUITABILITY AND USE OF THIS COMPONENT FOR ANY BUILDING IS THE RESPONSIBILITY OF THE BUILDING DESIGNER PER ANSI/TPI 1 SEC. 2.

DOUGLAS FLEMING LICENSE No. 66648 STATE OF FLORIDA PROFESSIONAL ENGINEER

10/14/2010

TC LL	20.0 PSF	REF	R487-- 3305
TC DL	10.0 PSF	DATE	10/14/10
BC DL	10.0 PSF	DRW	HCUSR487 10287015
BC LL	0.0 PSF	HC-ENG	TCE/DF
TOT.LD.	40.0 PSF	SEQN-	68345
DUR.FAC.	1.25		
SPACING	24.0"	JREF-	1U61487_Z01

(9-244--Fill in later EDGLEY -- , ** - HF1A)

THIS DWG PREPARED FROM COMPUTER INPUT (LOADS & DIMENSIONS) SUBMITTED BY TRUSS MFR.

Top chord 2x4 SP #2 Dense
Bot chord 2x4 SP #2 Dense
Webs 2x4 SP #3

Note: This design is not to be used as a roof truss.
It is only to be used as a roof Hip Frame.
See detail HIPFRAME0109 for more information.

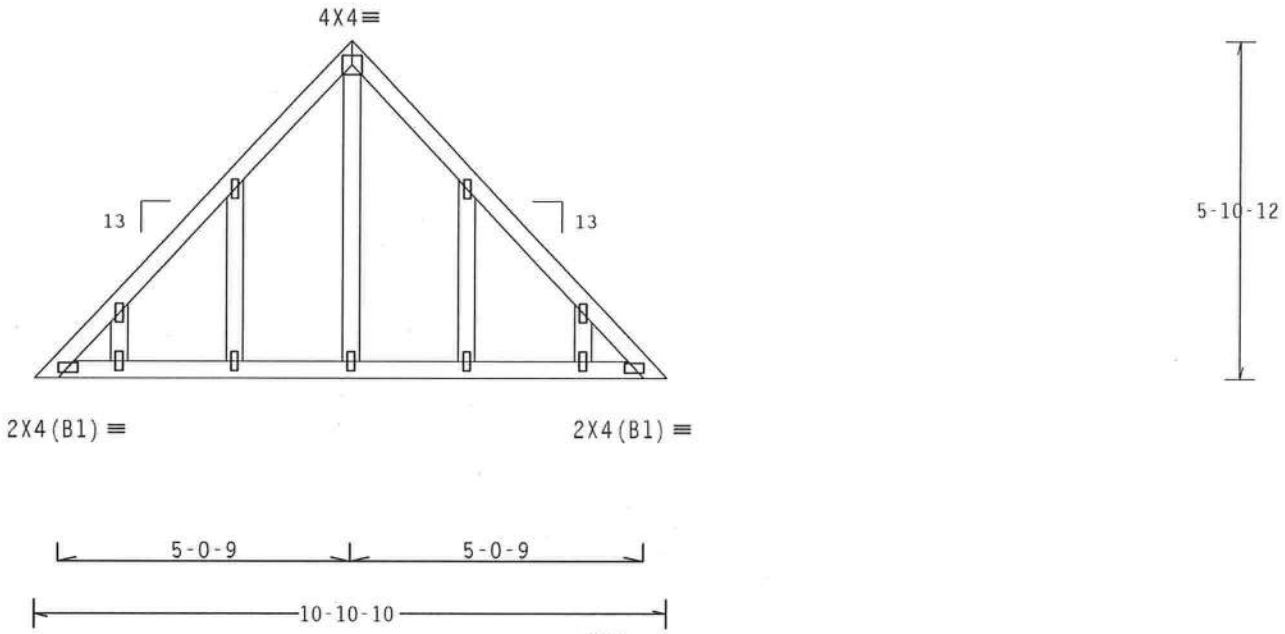

Note: All Plates Are 1.5X4 Except As Shown.

Design Crit: FBC2007Res/TPI-2002(STD)

PLT TYP. Wave FT/RT=20%(0%)/0(0) 9.0.03.0610.16 QTY 1 FL/-/4/-/-/R/- Scale =.3125"/Ft.

ALPINE
ITW Building Components Group Inc.
Haines City, FL 33844
FL COA #0 278

WARNING TRUSSES REQUIRE EXTREME CARE IN FABRICATION, HANDLING, SHIPPING, INSTALLING AND BRACING. REFER TO BCSI (BUILDING COMPONENT SAFETY INFORMATION), PUBLISHED BY TPI (TRUSS PLATE INSTITUTE, 218 NORTH LEE STREET, SUITE 312, ALEXANDRIA, VA. 22314) AND WTCA (WOOD TRUSS COUNCIL OF AMERICA, 6300 ENTERPRISE LANE, MADISON, WI 53719) FOR SAFETY PRACTICES PRIOR TO PERFORMING THESE FUNCTIONS. UNLESS OTHERWISE INDICATED TOP CHORD SHALL HAVE PROPERLY ATTACHED STRUCTURAL PANELS AND BOTTOM CHORD SHALL HAVE A PROPERLY ATTACHED RIGID CEILING.

IMPORTANTFURNISH A COPY OF THIS DESIGN TO THE INSTALLATION CONTRACTOR. ITW BCG, INC. SHALL NOT BE RESPONSIBLE FOR ANY DEVIATION FROM THIS DESIGN; ANY FAILURE TO BUILD THE TRUSS IN CONFORMANCE WITH TPI; OR FABRICATING, HANDLING, SHIPPING, INSTALLING & BRACING OF TRUSSES. DESIGN CONFORMS WITH APPLICABLE PROVISIONS OF NDS (NATIONAL DESIGN SPEC. BY AF&PA) AND TPI. ITW BCG, INC. CONNECTOR PLATES ARE MADE OF 20/18/16GA (W,H/SS/K) ASTM A653 GRADE 40/60 (W, K/H,SS) GALV. STEEL. APPLY PLATES TO EACH FACE OF TRUSS AND, UNLESS OTHERWISE LOCATED ON THIS DESIGN, POSITION PER DRAWINGS 160[illegible]. ANY INSPECTION OF PLATES FOLLOWED BY (1) SHALL BE PER ANNEX A3 OF TPI1-2002 SEC.3. A SEAL ON THIS DRAWING INDICATES ACCEPTANCE OF PROFESSIONAL ENGINEERING RESPONSIBILITY SOLELY FOR THE TRUSS COMPONENT DESIGN SHOWN. THE SUITABILITY AND USE OF THIS COMPONENT FOR ANY BUILDING IS THE RESPONSIBILITY OF THE BUILDING DESIGNER PER ANSI/TPI 1 SEC. 2.

DOUGLAS FLEMING LICENSE No. 66648 STATE OF FLORIDA PROFESSIONAL ENGINEER

10/14/2010

TC LL	20.0 PSF	REF R487-- 3306
TC DL	10.0 PSF	DATE 10/14/10
BC DL	10.0 PSF	DRW HCUSR487 10287067
BC LL	0.0 PSF	HC-ENG TCE/DF
TOT.LD.	40.0 PSF	SEQN- 68354
DUR.FAC.	1.25	
SPACING	24.0"	JREF- 1U61487_Z01

(9-244--Fill in later EDGLEY -- , ** - HF3)

THIS DWG PREPARED FROM COMPUTER INPUT (LOADS & DIMENSIONS) SUBMITTED BY TRUSS MFR.

Top chord 2x4 SP #2 Dense
Bot chord 2x4 SP #2 Dense
Webs 2x4 SP #3

Note: This design is not to be used as a roof truss.
It is only to be used as a roof Hip Frame.
See detail HIPFRAME0109 for more information.

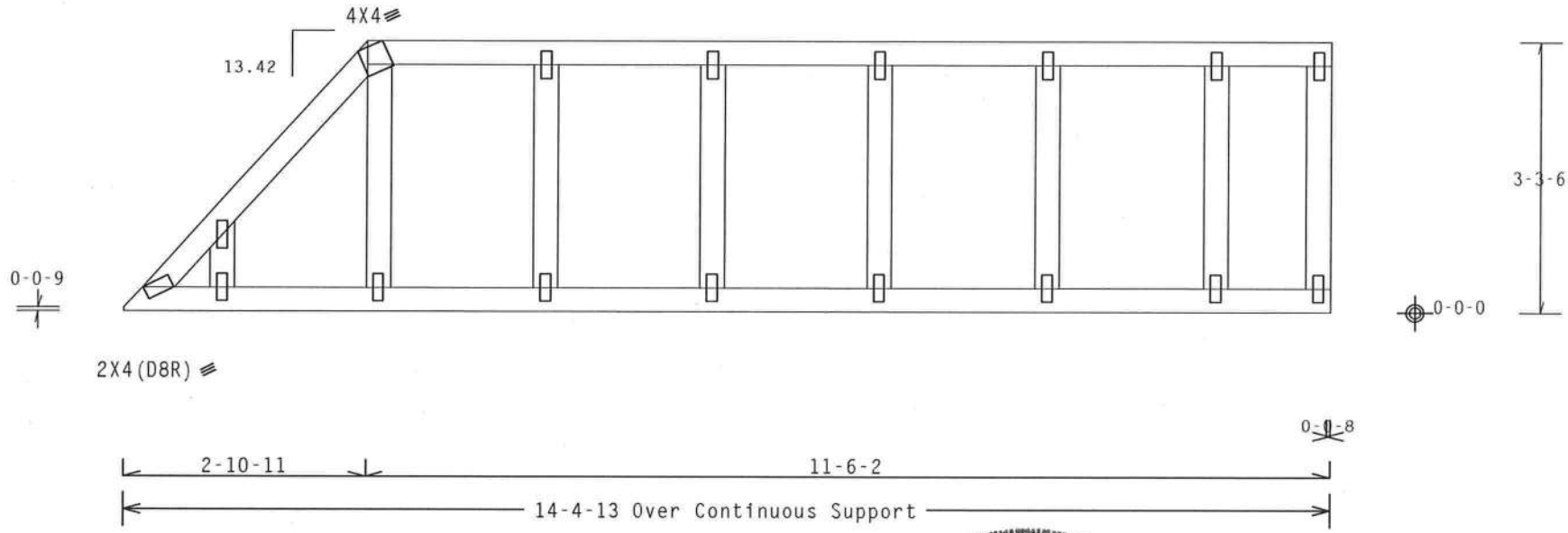

Note: All Plates Are 1.5X4 Except As Shown.

Design Crit: FBC2007Res/TPI-2002(STD)

PLT TYP. Wave FT/RT=20%(0%)/0(0) 9.02.03.0610.16 QTY: FL/-/4/-/-/R/- Scale =.5"/Ft.

ALPINE
ITW Building Components Group Inc.
Haines City, FL 33844
FL COA #0 278

WARNING TRUSSES REQUIRE EXTREME CARE IN FABRICATION, HANDLING, SHIPPING, INSTALLING AND BRACING. REFER TO BCSI (BUILDING COMPONENT SAFETY INFORMATION), PUBLISHED BY TPI (TRUSS PLATE INSTITUTE, 218 NORTH LEE STREET, SUITE 312, ALEXANDRIA, VA. 22314) AND WTCA (WOOD TRUSS COUNCIL OF AMERICA, 6300 ENTERPRISE LANE, MADISON, WI 53719) FOR SAFETY PRACTICES PRIOR TO PERFORMING THESE FUNCTIONS. UNLESS OTHERWISE INDICATED TOP CHORD SHALL HAVE PROPERLY ATTACHED STRUCTURAL PANELS AND BOTTOM CHORD SHALL HAVE A PROPERLY ATTACHED RIGID CEILING.

IMPORTANTFURNISH A COPY OF THIS DESIGN TO THE INSTALLATION CONTRACTOR. ITW BCG, INC. SHALL NOT BE RESPONSIBLE FOR ANY DEVIATION FROM THIS DESIGN; ANY FAILURE TO BUILD THE TRUSS IN CONFORMANCE WITH TPI; OR FABRICATING, HANDLING, SHIPPING, INSTALLING & BRACING OF TRUSSES.
DESIGN CONFORMS WITH APPLICABLE PROVISIONS OF NDS (NATIONAL DESIGN SPEC. BY AF&PA) AND TPI. ITW CONNECTOR PLATES ARE MADE OF 20/18/16GA (W,H/SS/K) ASTM A653 GRADE 40/60 (W, K/H,SS) GALV. STEEL. APPLY PLATES TO EACH FACE OF TRUSS AND, UNLESS OTHERWISE LOCATED ON THIS DESIGN, POSITION PER DRAWINGS 160A-2. ANY INSPECTION OF PLATES FOLLOWED BY (1) SHALL BE PER ANNEX A3 OF TP11-2002 SEC.3. A SEAL ON THIS DRAWING INDICATES ACCEPTANCE OF PROFESSIONAL ENGINEERING RESPONSIBILITY SOLELY FOR THE TRUSS COMPONENT DESIGN SHOWN. THE SUITABILITY AND USE OF THIS COMPONENT FOR ANY BUILDING IS THE RESPONSIBILITY OF THE BUILDING DESIGNER PER ANSI/TPI 1 SEC. 2.

DOUGLAS FLEMING LICENSE No. 66648 STATE OF FLORIDA PROFESSIONAL ENGINEER
10/14/2010

TC LL	20.0 PSF	REF R487-- 3307
TC DL	10.0 PSF	DATE 10/14/10
BC DL	10.0 PSF	DRW HCUSR487 10287039
BC LL	0.0 PSF	HC-ENG TCE/DF
TOT.LD.	40.0 PSF	SEQN- 68351
DUR.FAC.	1.25	FROM AH
SPACING	24.0"	JREF- 1U61487_Z01

(9-244--Fill in later EDGLEY -- , ** - H7G)

Top chord 2x4 SP #2 Dense
Bot chord 2x6 SP #2
Webs 2x4 SP #3

110 mph wind, 15.00 ft mean hgt, ASCE 7-05, CLOSED bldg, not located within 4.50 ft from roof edge, CAT II, EXP C, wind TC DL=5.0 psf, wind BC DL=5.0 psf. Iw=1.00 GCpi(+/-)=0.18

Wind reactions based on MWFRS pressures.

Roof overhang supports 2.00 psf soffit load.

In lieu of structural panels use purlins to brace all flat TC @ 24" OC.

Deflection meets L/240 live and L/180 total load.

Special loads
------(Lumber Dur.Fac.=1.25 / Plate Dur.Fac.=1.25)
TC- From 62 plf at -1.87 to 62 plf at 7.00
TC- From 62 plf at 7.00 to 62 plf at 12.67
BC- From 4 plf at -1.87 to 4 plf at 0.00
BC- From 20 plf at 0.00 to 20 plf at 12.67
TC- 444.48 lb Conc. Load at 7.03
TC- 194.58 lb Conc. Load at 9.06,11.06
BC- 491.03 lb Conc. Load at 7.03
BC- 131.47 lb Conc. Load at 9.06,11.06

Right end vertical not exposed to wind pressure.

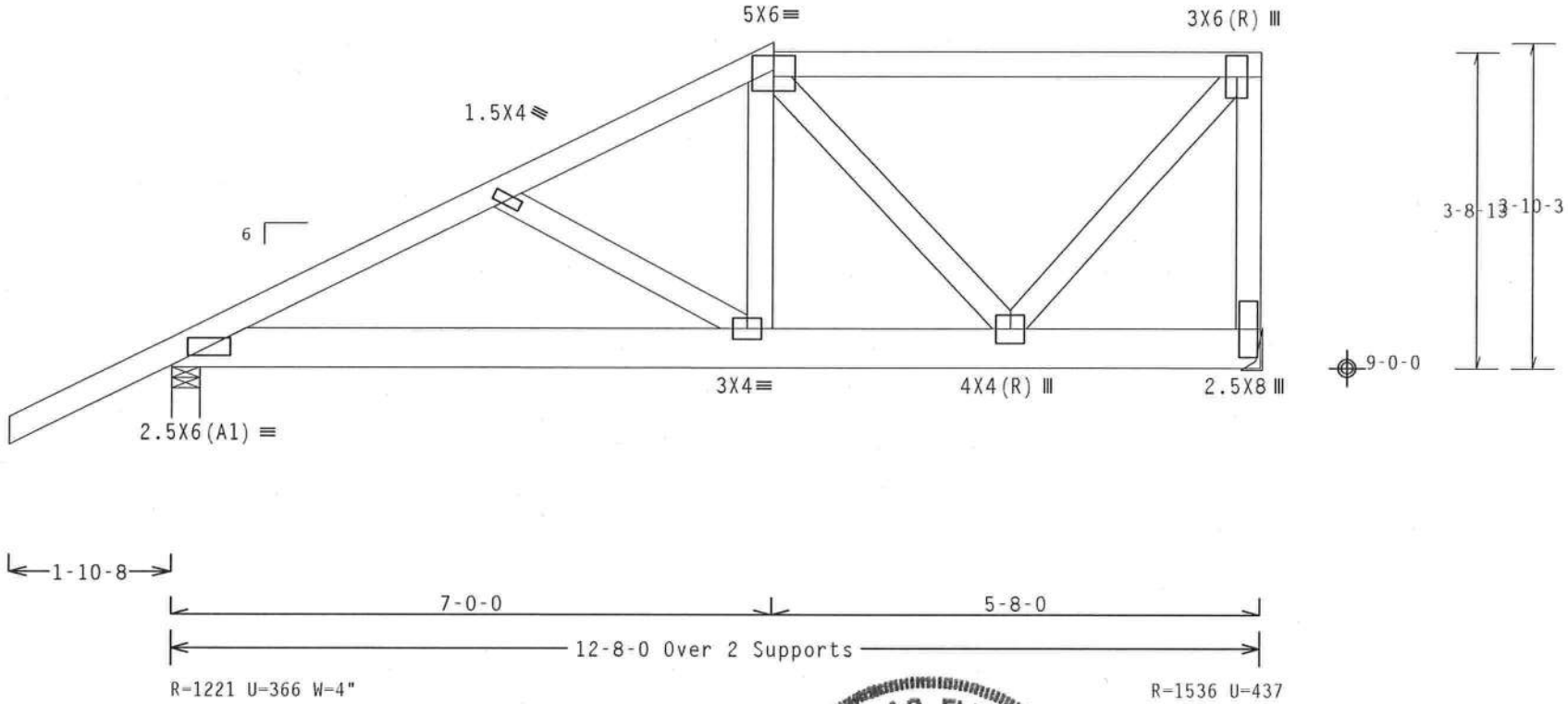

Design Crit: FBC2007Res/TPI-2002(STD)
PLT TYP. Wave FT/RT=20%(0%)/0(0) 9.02.03.0610.16 QTY 1 FL/-/4/-/-/R/- Scale =.5"/Ft.

ALPINE
ITW Building Components Group Inc.
Haines City, FL 33844
FL COA #0 278

WARNING TRUSSES REQUIRE EXTREME CARE IN FABRICATION, HANDLING, SHIPPING, INSTALLING AND BRACING. REFER TO BCSI (BUILDING COMPONENT SAFETY INFORMATION), PUBLISHED BY TPI (TRUSS PLATE INSTITUTE, 218 NORTH LEE STREET, SUITE 312, ALEXANDRIA, VA. 22314) AND WTCA (WOOD TRUSS COUNCIL OF AMERICA, 6300 ENTERPRISE LANE, MADISON, WI 53719) FOR SAFETY PRACTICES PRIOR TO PERFORMING THESE FUNCTIONS. UNLESS OTHERWISE INDICATED TOP CHORD SHALL HAVE PROPERLY ATTACHED STRUCTURAL PANELS AND BOTTOM CHORD SHALL HAVE A PROPERLY ATTACHED RIGID CEILING.

IMPORTANTFURNISH A COPY OF THIS DESIGN TO THE INSTALLATION CONTRACTOR. ITW BCG, INC. SHALL NOT BE RESPONSIBLE FOR ANY DEVIATION FROM THIS DESIGN; ANY FAILURE TO BUILD THE TRUSS IN CONFORMANCE WITH TPI; OR FABRICATING, HANDLING, SHIPPING, INSTALLING & BRACING OF TRUSSES.
DESIGN CONFORMS WITH APPLICABLE PROVISIONS OF NDS (NATIONAL DESIGN SPEC. BY AF&PA) AND TPI. THIS DESIGN CONNECTOR PLATES ARE MADE OF 20/18/16GA (W,H/SS/K) ASTM A653 GRADE 40/60 (W, K/H,SS) GALV. STEEL. APPLY PLATES TO EACH FACE OF TRUSS AND, UNLESS OTHERWISE LOCATED ON THIS DESIGN, POSITION PER DRAWINGS 160A. ANY INSPECTION OF PLATES FOLLOWED BY (1) SHALL BE PER ANNEX A3 OF TPI1-2002 SEC.3. A SEAL ON THIS DRAWING INDICATES ACCEPTANCE OF PROFESSIONAL ENGINEERING RESPONSIBILITY SOLELY FOR THE TRUSS COMPONENT DESIGN SHOWN. THE SUITABILITY AND USE OF THIS COMPONENT FOR ANY BUILDING IS THE RESPONSIBILITY OF THE BUILDING DESIGNER PER ANSI/TPI 1 SEC. 2.

DOUGLAS FLEMING LICENSE No. 66648 STATE OF FLORIDA PROFESSIONAL ENGINEER
10/14/2010

TC LL	20.0 PSF	REF R487-- 3308
TC DL	10.0 PSF	DATE 10/14/10
BC DL	10.0 PSF	DRW HCUSR487 10287044
BC LL	0.0 PSF	HC-ENG TCE/DF
TOT.LD.	40.0 PSF	SEQN- 68311
DUR.FAC.	1.25	FROM AH
SPACING	24.0"	JREF- 1U61487_Z01

THIS DWG PREPARED FROM COMPUTER INPUT (LOADS & DIMENSIONS) SUBMITTED BY TRUSS MFR.

(9-244--Fill in later EDGLEY -- , ** - H9G)

Top chord 2x4 SP #2 Dense
Bot chord 2x4 SP #2 Dense
Webs 2x4 SP #3

Roof overhang supports 2.00 psf soffit load.

In lieu of structural panels use purlins to brace all flat TC @ 24" OC.

Bottom chord checked for 10.00 psf non-concurrent live load.

MWFRS loads based on trusses located at least 15.00 ft. from roof edge.

110 mph wind, 15.00 ft mean hgt, ASCE 7-05, CLOSED bldg, not located within 4.50 ft from roof edge, CAT II, EXP C, wind TC DL=5.0 psf, wind BC DL=5.0 psf. Iw=1.00 GCpi(+/-)=0.18

Wind reactions based on MWFRS pressures.

Right end vertical not exposed to wind pressure.

Deflection meets L/240 live and L/180 total load.

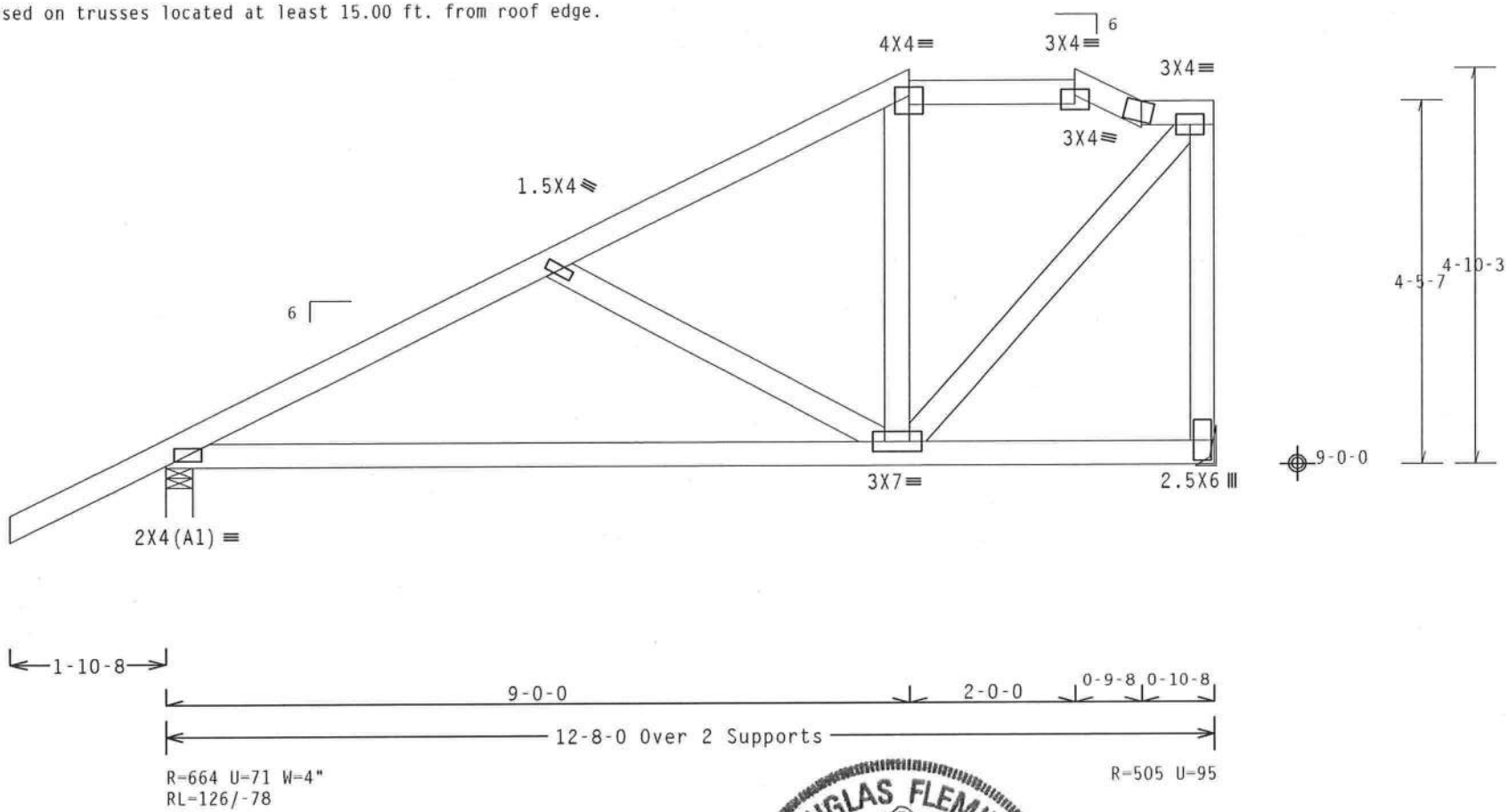

Design Crit: FBC2007Res/TPI-2002(STD)
FT/RT=20%(0%)/0(0)

PLT TYP. Wave

9.02.03.0610.16 QTY 1

FL/-/4/-/-/R/-

Scale =.5"/Ft.

TC LL	20.0 PSF	REF R487-- 3309
TC DL	10.0 PSF	DATE 10/14/10
BC DL	10.0 PSF	DRW HCUSR487 10287046
BC LL	0.0 PSF	HC-ENG TCE/DF
TOT.LD.	40.0 PSF	SEQN- 68316
DUR.FAC.	1.25	FROM AH
SPACING	24.0"	JREF- 1U61487_Z01

ALPINE
ITW Building Components Group Inc.
Haines City, FL 33844
FL COA #0 278

WARNING TRUSSES REQUIRE EXTREME CARE IN FABRICATION, HANDLING, SHIPPING, INSTALLING AND BRACING. REFER TO BCSI (BUILDING COMPONENT SAFETY INFORMATION), PUBLISHED BY TPI (TRUSS PLATE INSTITUTE, 218 NORTH LEE STREET, SUITE 312, ALEXANDRIA, VA. 22314) AND WTCA (WOOD TRUSS COUNCIL OF AMERICA, 6300 ENTERPRISE LANE, MADISON, WI 53719) FOR SAFETY PRACTICES PRIOR TO PERFORMING THESE FUNCTIONS. UNLESS OTHERWISE INDICATED TOP CHORD SHALL HAVE PROPERLY ATTACHED STRUCTURAL PANELS AND BOTTOM CHORD SHALL HAVE A PROPERLY ATTACHED RIGID CEILING.

IMPORTANTFURNISH A COPY OF THIS DESIGN TO THE INSTALLATION CONTRACTOR. ITW BCG, INC. SHALL NOT BE RESPONSIBLE FOR ANY DEVIATION FROM THIS DESIGN; ANY FAILURE TO BUILD THE TRUSS IN CONFORMANCE WITH TPI1; OR FABRICATING, HANDLING, SHIPPING, INSTALLING & BRACING OF TRUSSES. DESIGN CONFORMS WITH APPLICABLE PROVISIONS OF NDS (NATIONAL DESIGN SPEC. BY AF&PA) AND TPI. ITW BCG CONNECTOR PLATES ARE MADE OF 20/18/16GA (H,H/SS/X) ASTM A653 GRADE 40/60 (H, X/H,SS) GALV. STEEL. APPLY PLATES TO EACH FACE OF TRUSS AND, UNLESS OTHERWISE LOCATED ON THIS DESIGN, POSITION PER DRAWINGS 1604A. ANY INSPECTION OF PLATES FOLLOWED BY (1) SHALL BE PER ANNEX A3 OF TPI1-2002 SEC.3. A SEAL ON THIS DRAWING INDICATES ACCEPTANCE OF PROFESSIONAL ENGINEERING RESPONSIBILITY SOLELY FOR THE TRUSS COMPONENT DESIGN SHOWN. THE SUITABILITY AND USE OF THIS COMPONENT FOR ANY BUILDING IS THE RESPONSIBILITY OF THE BUILDING DESIGNER PER ANSI/TPI 1 SEC. 2.

DOUGLAS FLEMING LICENSE No. 66648 STATE OF FLORIDA PROFESSIONAL ENGINEER

10/14/2010

THIS DWG PREPARED FROM COMPUTER INPUT (LOADS & DIMENSIONS) SUBMITTED BY TRUSS MFR.

(9-244--Fill in later EDGLEY -- , ** - G)

Top chord 2x4 SP #2 Dense
Bot chord 2x4 SP #2 Dense
Webs 2x4 SP #3

Roof overhang supports 2.00 psf soffit load.

Bottom chord checked for 10.00 psf non-concurrent live load.

Deflection meets L/240 live and L/180 total load.

110 mph wind, 15.00 ft mean hgt, ASCE 7-05, CLOSED bldg, not located within 4.50 ft from roof edge, CAT II, EXP C, wind TC DL=5.0 psf, wind BC DL=5.0 psf. Iw=1.00 GCpi(+/-)=0.18

Wind reactions based on MWFRS pressures.

Right end vertical not exposed to wind pressure.

MWFRS loads based on trusses located at least 15.00 ft. from roof edge.

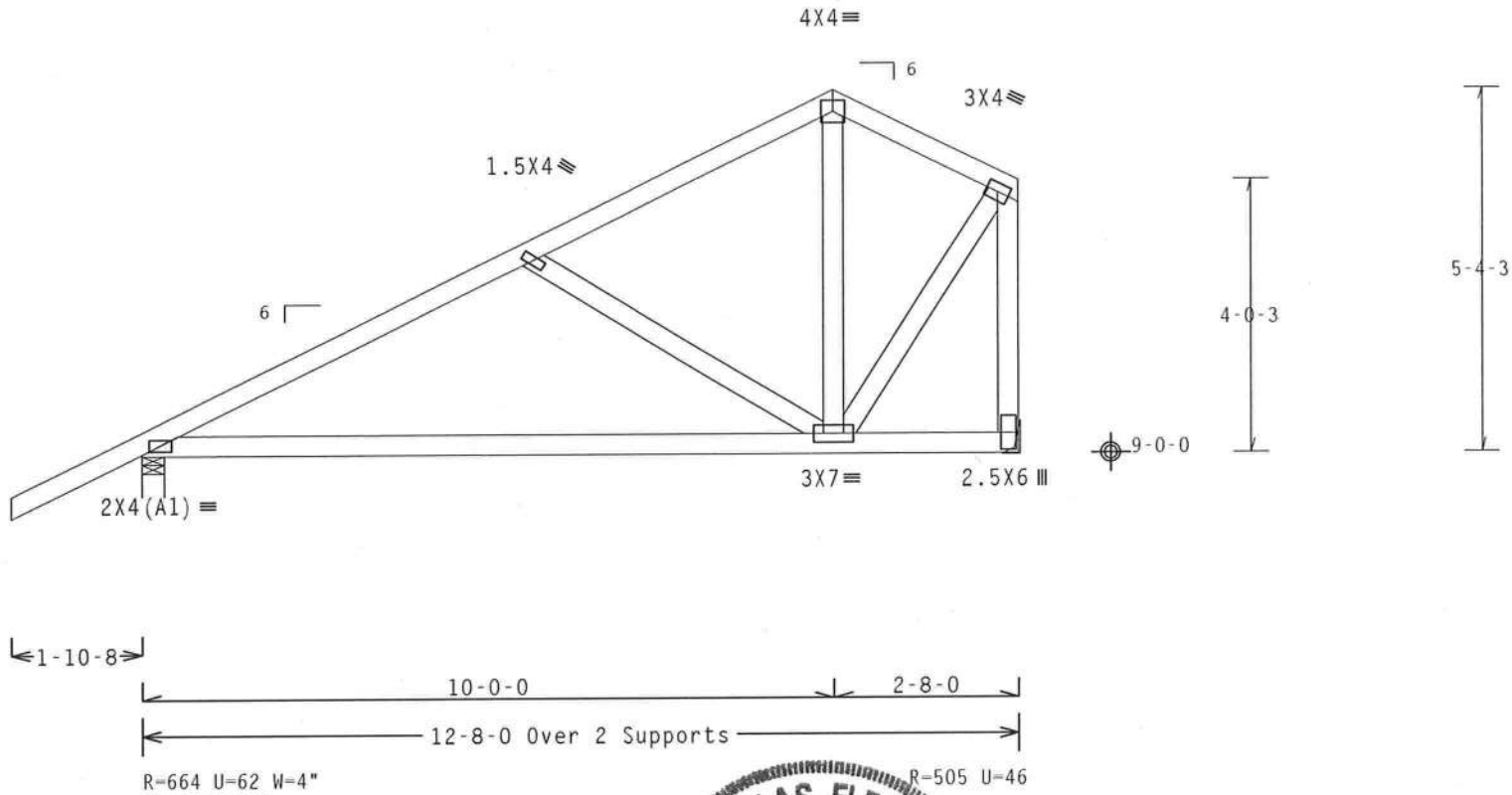

Design Crit: FBC2007Res/TPI-2002(STD)
FT/RT=20%(0%)/0(0)

PLT TYP. Wave

9.02.03.0610.16 QTY 4

FL/-/4/-/-/R/-

Scale =.375"/Ft.

ALPINE
ITW Building Components Group Inc.
Haines City, FL 33844
FL COA #0 278

WARNING TRUSSES REQUIRE EXTREME CARE IN FABRICATION, HANDLING, SHIPPING, INSTALLING AND BRACING. REFER TO BCSI (BUILDING COMPONENT SAFETY INFORMATION), PUBLISHED BY TPI (TRUSS PLATE INSTITUTE, 218 NORTH LEE STREET, SUITE 312, ALEXANDRIA, VA. 22314) AND WTCA (WOOD TRUSS COUNCIL OF AMERICA, 6300 ENTERPRISE LANE, MADISON, WI 53719) FOR SAFETY PRACTICES PRIOR TO PERFORMING THESE FUNCTIONS. UNLESS OTHERWISE INDICATED TOP CHORD SHALL HAVE PROPERLY ATTACHED STRUCTURAL PANELS AND BOTTOM CHORD SHALL HAVE A PROPERLY ATTACHED RIGID CEILING.

IMPORTANTFURNISH A COPY OF THIS DESIGN TO THE INSTALLATION CONTRACTOR. ITW BCG, INC. SHALL NOT BE RESPONSIBLE FOR ANY DEVIATION FROM THIS DESIGN; ANY FAILURE TO BUILD THE TRUSS IN CONFORMANCE WITH TPI; OR FABRICATING, HANDLING, SHIPPING, INSTALLING & BRACING OF TRUSSES. DESIGN CONFORMS WITH APPLICABLE PROVISIONS OF NDS (NATIONAL DESIGN SPEC, BY AF&PA) AND TPI. ITW BCG CONNECTOR PLATES ARE MADE OF 20/18/16GA (W,H/SS/K) ASTM A653 GRADE 40/60 (W, K/H,SS) GALV. STEEL. APPLY PLATES TO EACH FACE OF TRUSS AND, UNLESS OTHERWISE LOCATED ON THIS DESIGN, POSITION PER DRAWINGS 160A. ANY INSPECTION OF PLATES FOLLOWED BY (1) SHALL BE PER ANNEX A3 OF TPI1-2002 SEC.3. A SEAL ON THIS DRAWING INDICATES ACCEPTANCE OF PROFESSIONAL ENGINEERING RESPONSIBILITY SOLELY FOR THE TRUSS COMPONENT DESIGN SHOWN. THE SUITABILITY AND USE OF THIS COMPONENT FOR ANY BUILDING IS THE RESPONSIBILITY OF THE BUILDING DESIGNER PER ANSI/TPI 1 SEC. 2.

DOUGLAS FLEMING LICENSE No. 66648 STATE OF FLORIDA PROFESSIONAL ENGINEER

10/14/2010

TC LL	20.0 PSF	REF	R487-- 3310
TC DL	10.0 PSF	DATE	10/14/10
BC DL	10.0 PSF	DRW	HCUSR487 10287047
BC LL	0.0 PSF	HC-ENG	TCE/DF
TOT.LD.	40.0 PSF	SEQN-	68321
DUR.FAC.	1.25	FROM	AH
SPACING	24.0"	JREF-	1U61487_Z01

THIS DWG PREPARED FROM COMPUTER INPUT (LOADS & DIMENSIONS) SUBMITTED BY TRUSS MFR.

(9-244--Fill in later EDGLEY -- , ** - EJ7)

Top chord 2x4 SP #2 Dense
Bot chord 2x4 SP #2 Dense

Roof overhang supports 2.00 psf soffit load.

Bottom chord checked for 10.00 psf non-concurrent live load.

MWFRS loads based on trusses located at least 7.50 ft. from roof edge.

110 mph wind, 15.00 ft mean hgt, ASCE 7-05, CLOSED bldg, not located within 4.50 ft from roof edge, CAT II, EXP C, wind TC DL=5.0 psf, wind BC DL=5.0 psf. Iw=1.00 GCpi(+/-)=0.18

Wind reactions based on MWFRS pressures.

Deflection meets L/240 live and L/180 total load.

Provide (2) 16d common nails(0.162"x3.5"), toe nailed at Top chord.
Provide (2) 16d common nails(0.162"x3.5"), toe nailed at Bot chord.

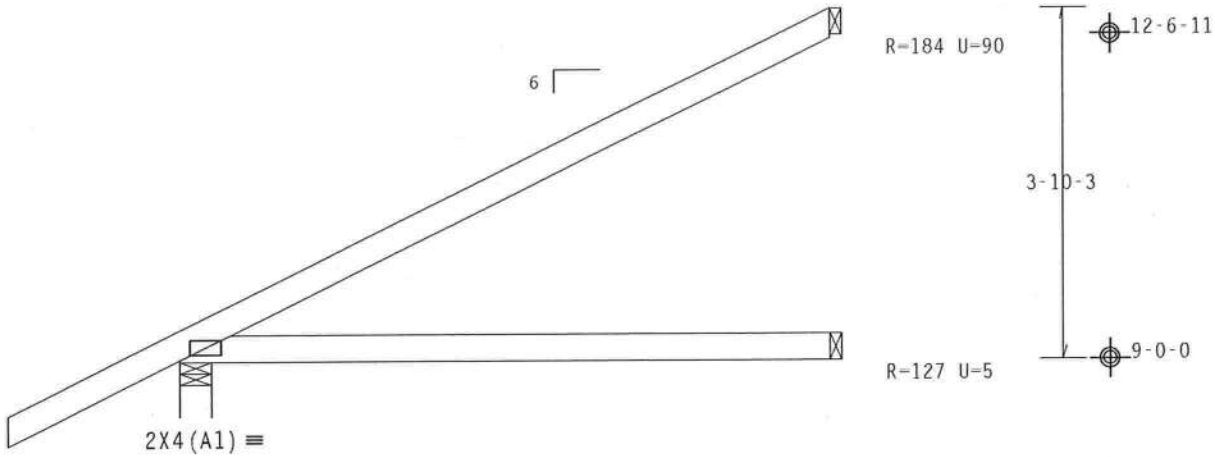

1-10-8

7-0-0 Over 3 Supports

R=440 U=93 W=4"
RL=151/-62

Design Crit: FBC2007Res/TPI-2002(STD)
FT/RT=20%(0%)/0(0)

PLT TYP. Wave

9.02.03.0610.16 QTY:20 FL/-/4/-/-/R/- Scale =.5"/Ft.

ALPINE
ITW Building Components Group Inc.
Haines City, FL 33844
FL COA #0 278

WARNING TRUSSES REQUIRE EXTREME CARE IN FABRICATION, HANDLING, SHIPPING, INSTALLING AND BRACING. REFER TO BCSI (BUILDING COMPONENT SAFETY INFORMATION), PUBLISHED BY TPI (TRUSS PLATE INSTITUTE, 218 NORTH LEE STREET, SUITE 312, ALEXANDRIA, VA. 22314) AND WTCA (WOOD TRUSS COUNCIL OF AMERICA, 6300 ENTERPRISE LANE, MADISON, WI 53719) FOR SAFETY PRACTICES PRIOR TO PERFORMING THESE FUNCTIONS. UNLESS OTHERWISE INDICATED TOP CHORD SHALL HAVE PROPERLY ATTACHED STRUCTURAL PANELS AND BOTTOM CHORD SHALL HAVE A PROPERLY ATTACHED RIGID CEILING.

IMPORTANTFURNISH A COPY OF THIS DESIGN TO THE INSTALLATION CONTRACTOR. ITW BCG, INC. SHALL NOT BE RESPONSIBLE FOR ANY DEVIATION FROM THIS DESIGN; ANY FAILURE TO BUILD THE TRUSS IN CONFORMANCE WITH TPI; OR FABRICATING, HANDLING, SHIPPING, INSTALLING & BRACING OF TRUSSES. DESIGN CONFORMS WITH APPLICABLE PROVISIONS OF NDS (NATIONAL DESIGN SPEC. BY AF&PA) AND TPI. ITW CONNECTOR PLATES ARE MADE OF 20/18/16GA (W,H/SS/K) ASTM A653 GRADE 40/60 (W, K/H,SS) GALV. STEEL. APPLY PLATES TO EACH FACE OF TRUSS AND, UNLESS OTHERWISE LOCATED ON THIS DESIGN, POSITION PER DRAWINGS 160A-1. ANY INSPECTION OF PLATES FOLLOWED BY (1) SHALL BE PER ANNEX A3 OF TPI1-2002 SEC.3. A SEAL ON THIS DRAWING INDICATES ACCEPTANCE OF PROFESSIONAL ENGINEERING RESPONSIBILITY SOLELY FOR THE TRUSS COMPONENT DESIGN SHOWN. THE SUITABILITY AND USE OF THIS COMPONENT FOR ANY BUILDING IS THE RESPONSIBILITY OF THE BUILDING DESIGNER PER ANSI/TPI 1 SEC. 2.

DOUGLAS FLEMING LICENSE No. 66648 STATE OF FLORIDA PROFESSIONAL ENGINEER
10/14/2010

TC LL	20.0 PSF	REF	R487-- 3311
TC DL	10.0 PSF	DATE	10/14/10
BC DL	10.0 PSF	DRW	HCUSR487 10287051
BC LL	0.0 PSF	HC-ENG	TCE/DF
TOT.LD.	40.0 PSF	SEQN-	67650
DUR.FAC.	1.25	FROM	AH
SPACING	24.0"	JREF-	1U61487_Z01

(9-244--Fill in later EDGLEY -- , ** - EJ7A)

Top chord 2x4 SP #2 Dense
Bot chord 2x4 SP #2 Dense

Roof overhang supports 2.00 psf soffit load.

Bottom chord checked for 10.00 psf non-concurrent live load.

MWFRS loads based on trusses located at least 7.50 ft. from roof edge.

110 mph wind, 15.00 ft mean hgt, ASCE 7-05, CLOSED bldg, not located within 4.50 ft from roof edge, CAT II, EXP C, wind TC DL=5.0 psf, wind BC DL=5.0 psf. Iw=1.00 GCpi(+/-)=0.18

Wind reactions based on MWFRS pressures.

Deflection meets L/240 live and L/180 total load.

Provide (2) 16d common nails(0.162"x3.5"), toe nailed at Top chord.
Provide (2) 16d common nails(0.162"x3.5"), toe nailed at Bot chord.

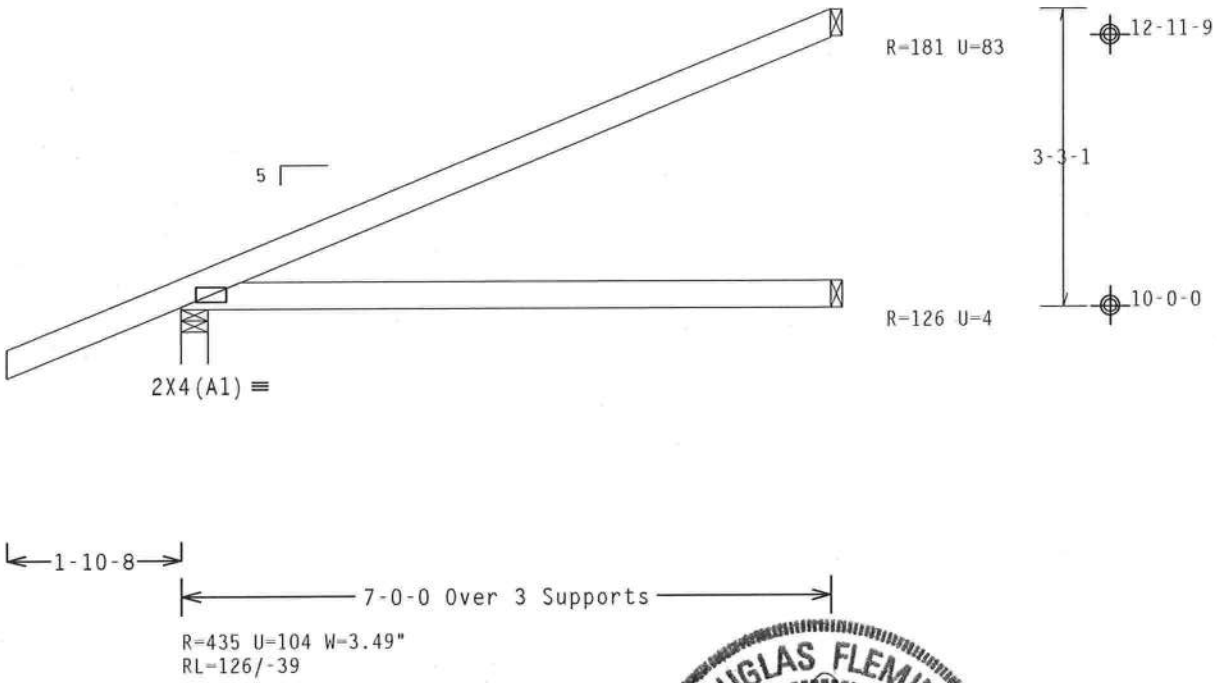

Design Crit: FBC2007Res/TPI-2002(STD)
FT/RT=20%(0%)/0(0) 9.02.03.0610.16 QTY: 4 FL/-/4/-/-/R/- Scale =.5"/Ft.

PLT TYP. Wave

ALPINE
ITW Building Components Group Inc.
Haines City, FL 33844
FL COA #0 278

WARNING TRUSSES REQUIRE EXTREME CARE IN FABRICATION, HANDLING, SHIPPING, INSTALLING AND BRACING. REFER TO BCSI (BUILDING COMPONENT SAFETY INFORMATION), PUBLISHED BY TPI (TRUSS PLATE INSTITUTE, 218 NORTH LEE STREET, SUITE 312, ALEXANDRIA, VA, 22314) AND WTCA (WOOD TRUSS COUNCIL OF AMERICA, 6300 ENTERPRISE LANE, MADISON, WI 53719) FOR SAFETY PRACTICES PRIOR TO PERFORMING THESE FUNCTIONS. UNLESS OTHERWISE INDICATED TOP CHORD SHALL HAVE PROPERLY ATTACHED STRUCTURAL PANELS AND BOTTOM CHORD SHALL HAVE A PROPERLY ATTACHED RIGID CEILING.

IMPORTANTFURNISH A COPY OF THIS DESIGN TO THE INSTALLATION CONTRACTOR. ITW BCG, INC. SHALL NOT BE RESPONSIBLE FOR ANY DEVIATION FROM THIS DESIGN; ANY FAILURE TO BUILD THE TRUSS IN CONFORMANCE WITH TPI1; OR FABRICATING, HANDLING, SHIPPING, INSTALLING & BRACING OF TRUSSES. DESIGN CONFORMS WITH APPLICABLE PROVISIONS OF NDS (NATIONAL DESIGN SPEC. BY AF&PA) AND TPI. ITW CONNECTOR PLATES ARE MADE OF 20/18/16GA (W,H/SS/K) ASTM A653 GRADE 40/60 (W, K/H,SS) GALV. STEEL. APPLY PLATES TO EACH FACE OF TRUSS AND, UNLESS OTHERWISE LOCATED ON THIS DESIGN, POSITION PER DRAWINGS 160A-1. ANY INSPECTION OF PLATES FOLLOWED BY (1) SHALL BE PER ANNEX A3 OF TPI1-2002 SEC.3. A SEAL ON THIS DRAWING INDICATES ACCEPTANCE OF PROFESSIONAL ENGINEERING RESPONSIBILITY SOLELY FOR THE TRUSS COMPONENT DESIGN SHOWN. THE SUITABILITY AND USE OF THIS COMPONENT FOR ANY BUILDING IS THE RESPONSIBILITY OF THE BUILDING DESIGNER PER ANSI/TPI 1 SEC. 2.

DOUGLAS FLEMING LICENSE No. 66648 STATE OF FLORIDA PROFESSIONAL ENGINEER
10/14/2010

TC LL	20.0 PSF	REF	R487-- 3312
TC DL	10.0 PSF	DATE	10/14/10
BC DL	10.0 PSF	DRW	HCUSR487 10287028
BC LL	0.0 PSF	HC-ENG	TCE/DF
TOT.LD.	40.0 PSF	SEQN-	67570
DUR.FAC.	1.25	FROM	GA
SPACING	24.0"	JREF-	1U61487_Z01

THIS DWG PREPARED FROM COMPUTER INPUT (LOADS & DIMENSIONS) SUBMITTED BY TRUSS MFR.

(9-244--Fill in later EDGLEY -- , ** - CJ5)

Top chord 2x4 SP #2 Dense
Bot chord 2x4 SP #2 Dense

Roof overhang supports 2.00 psf soffit load.

Bottom chord checked for 10.00 psf non-concurrent live load.

Provide (2) 16d common nails(0.162"x3.5"), toe nailed at Top chord.
Provide (2) 16d common nails(0.162"x3.5"), toe nailed at Bot chord.

110 mph wind, 15.00 ft mean hgt, ASCE 7-05, CLOSED bldg, not located within 4.50 ft from roof edge, CAT II, EXP C, wind TC DL=5.0 psf, wind BC DL=5.0 psf. Iw=1.00 GCpi(+/-)=0.18

Wind reactions based on MWFRS pressures.

Deflection meets L/240 live and L/180 total load.

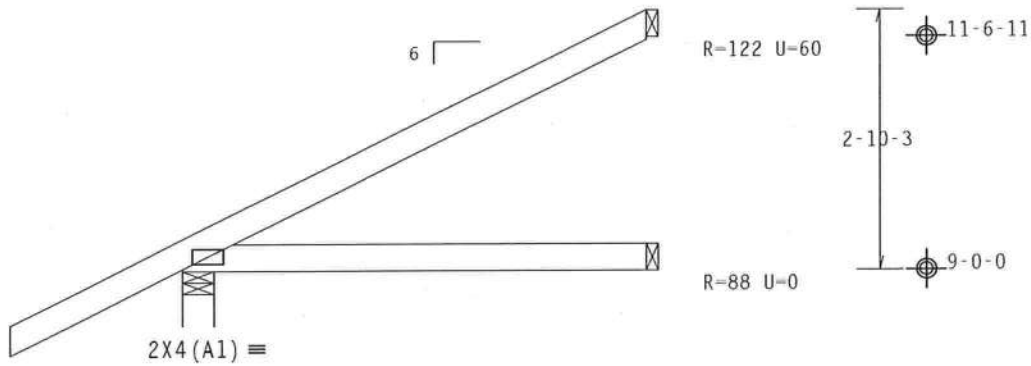

1-10-8

5-0-0 Over 3 Supports

R=365 U=84 W=4"
RL=117/-55

Design Crit: FBC2007Res/TPI-2002(STD)
FT/RT=20%(0%)/0(0)

PLT TYP. Wave

9.02.03.0610.16 QTY: 4 FL/-/4/-/-/R/-

Scale =.5"/Ft.

ALPINE
ITW Building Components Group Inc.
Haines City, FL 33844
FL COA #0 278

WARNING TRUSSES REQUIRE EXTREME CARE IN FABRICATION, HANDLING, SHIPPING, INSTALLING AND BRACING. REFER TO BCSI (BUILDING COMPONENT SAFETY INFORMATION), PUBLISHED BY TPI (TRUSS PLATE INSTITUTE, 218 NORTH LEE STREET, SUITE 312, ALEXANDRIA, VA. 22314) AND WTCA (WOOD TRUSS COUNCIL OF AMERICA, 6300 ENTERPRISE LANE, MADISON, WI 53719) FOR SAFETY PRACTICES PRIOR TO PERFORMING THESE FUNCTIONS. UNLESS OTHERWISE INDICATED TOP CHORD SHALL HAVE PROPERLY ATTACHED STRUCTURAL PANELS AND BOTTOM CHORD SHALL HAVE A PROPERLY ATTACHED RIGID CEILING.

IMPORTANTFURNISH A COPY OF THIS DESIGN TO THE INSTALLATION CONTRACTOR. ITW BCG, INC. SHALL NOT BE RESPONSIBLE FOR ANY DEVIATION FROM THIS DESIGN; ANY FAILURE TO BUILD THE TRUSS IN CONFORMANCE WITH TPI; OR FABRICATING, HANDLING, SHIPPING, INSTALLING & BRACING OF TRUSSES.
DESIGN CONFORMS WITH APPLICABLE PROVISIONS OF NDS (NATIONAL DESIGN SPEC. BY AF&PA) AND TPI. ITW CONNECTOR PLATES ARE MADE OF 20/18/16GA (W,H/SS/K) ASTM A653 GRADE 40/60 (W, K/H,SS) GALV. STEEL. APPLY PLATES TO EACH FACE OF TRUSS AND, UNLESS OTHERWISE LOCATED ON THIS DESIGN, POSITION PER DRAWINGS 160A-2. ANY INSPECTION OF PLATES FOLLOWED BY (1) SHALL BE PER ANNEX A3 OF TPI1-2002 SEC.3. A SEAL ON THIS DRAWING INDICATES ACCEPTANCE OF PROFESSIONAL ENGINEERING RESPONSIBILITY SOLELY FOR THE TRUSS COMPONENT DESIGN SHOWN. THE SUITABILITY AND USE OF THIS COMPONENT FOR ANY BUILDING IS THE RESPONSIBILITY OF THE BUILDING DESIGNER PER ANSI/TPI 1 SEC. 2.

DOUGLAS FLEMING
LICENSE
No. 66648
STATE OF
FLORIDA
PROFESSIONAL ENGINEER
10/14/2010

TC LL	20.0 PSF	REF R487-- 3313
TC DL	10.0 PSF	DATE 10/14/10
BC DL	10.0 PSF	DRW HCUSR487 10287030
BC LL	0.0 PSF	HC-ENG TCE/DF
TOT.LD.	40.0 PSF	SEQN- 67653
DUR.FAC.	1.25	FROM AH
SPACING	24.0"	JREF- 1U61487_Z01

THIS DWG PREPARED FROM COMPUTER INPUT (LOADS & DIMENSIONS) SUBMITTED BY TRUSS MFR.

(9-244--Fill in later EDGLEY -- , ** - HJ7)

Top chord 2x4 SP #2 Dense
Bot chord 2x4 SP #2 Dense
Webs 2x4 SP #3

Hipjack supports 7-0-0 setback jacks with no webs.

Deflection meets L/240 live and L/180 total load.

110 mph wind, 15.00 ft mean hgt, ASCE 7-05, CLOSED bldg, Located anywhere in roof, CAT II, EXP C, wind TC DL=5.0 psf, wind BC DL=5.0 psf. Iw=1.00 GCpi(+/-)=0.18

Wind reactions based on MWFRS pressures.

Provide (2) 16d common nails(0.162"x3.5"), toe nailed at Top chord.
Provide (3) 16d common nails(0.162"x3.5"), toe nailed at Bot chord.

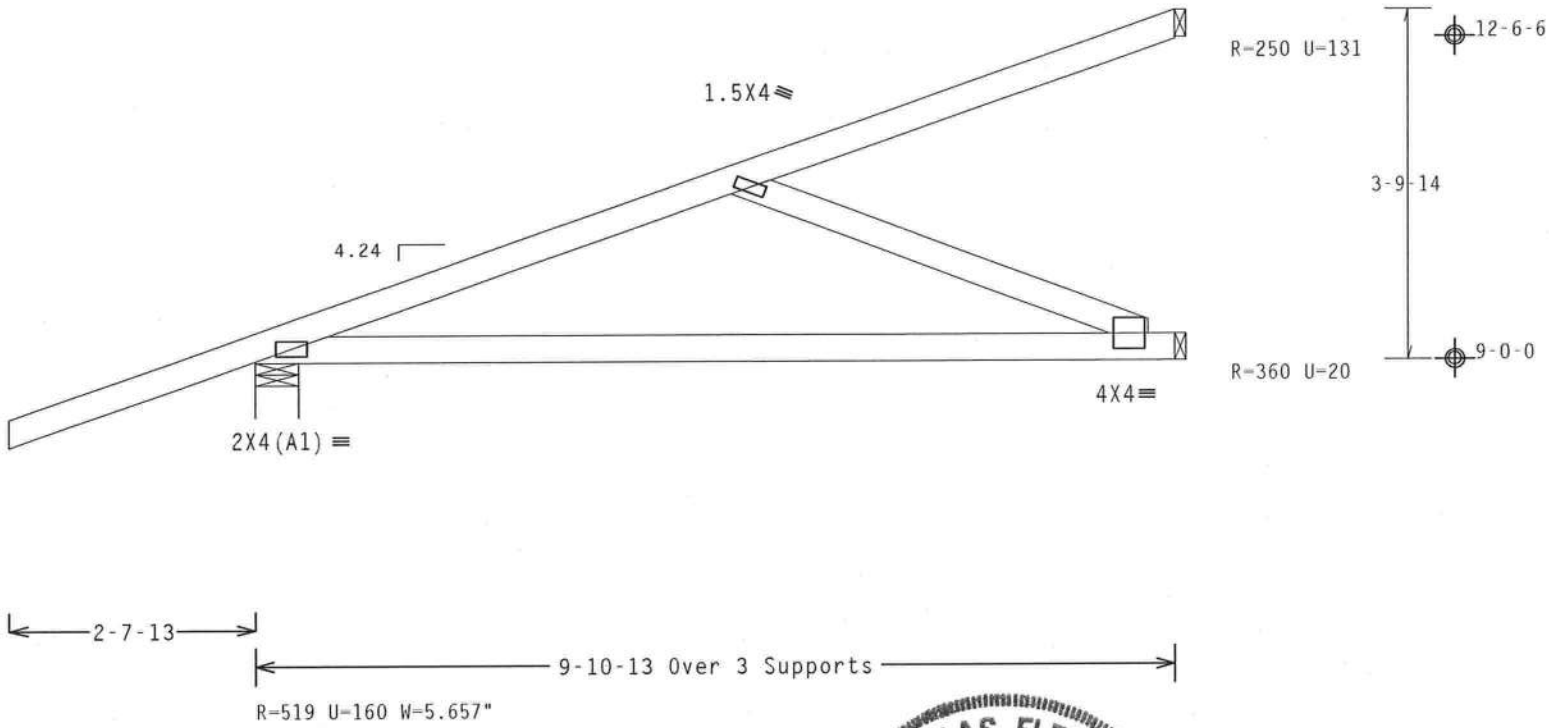

Design Crit: FBC2007Res/TPI-2002(STD)
FT/RT=20%(0%)/0(0)

PLT TYP. Wave

9.02.03.0610.16 QTY 7

FL/-/4/-/-/R/-

Scale =.5"/Ft.

ALPINE
ITW Building Components Group Inc.
Haines City, FL 33844
FL COA #0 278

WARNING TRUSSES REQUIRE EXTREME CARE IN FABRICATION, HANDLING, SHIPPING, INSTALLING AND BRACING. REFER TO BCSI (BUILDING COMPONENT SAFETY INFORMATION), PUBLISHED BY TPI (TRUSS PLATE INSTITUTE, 218 NORTH LEE STREET, SUITE 312, ALEXANDRIA, VA, 22314) AND WTCA (WOOD TRUSS COUNCIL OF AMERICA, 6300 ENTERPRISE LANE, MADISON, WI 53719) FOR SAFETY PRACTICES PRIOR TO PERFORMING THESE FUNCTIONS. UNLESS OTHERWISE INDICATED TOP CHORD SHALL HAVE PROPERLY ATTACHED STRUCTURAL PANELS AND BOTTOM CHORD SHALL HAVE A PROPERLY ATTACHED RIGID CEILING.

IMPORTANTFURNISH A COPY OF THIS DESIGN TO THE INSTALLATION CONTRACTOR. ITW BCG, INC. SHALL NOT BE RESPONSIBLE FOR ANY DEVIATION FROM THIS DESIGN; ANY FAILURE TO BUILD THE TRUSS IN CONFORMANCE WITH TPI; OR FABRICATING, HANDLING, SHIPPING, INSTALLING & BRACING OF TRUSSES. DESIGN CONFORMS WITH APPLICABLE PROVISIONS OF NDS (NATIONAL DESIGN SPEC. BY AF&PA) AND TPI. ITW BCG CONNECTOR PLATES ARE MADE OF 20/18/16GA (W,H/SS/K) ASTM A653 GRADE 40/60 (W, K/H,SS) GALV. STEEL. APPLY PLATES TO EACH FACE OF TRUSS AND, UNLESS OTHERWISE LOCATED ON THIS DESIGN, POSITION PER DRAWINGS 1604. ANY INSPECTION OF PLATES FOLLOWED BY (I) SHALL BE PER ANNEX A3 OF TPI1-2002 SEC.3. A SEAL ON THIS DRAWING INDICATES ACCEPTANCE OF PROFESSIONAL ENGINEERING RESPONSIBILITY SOLELY FOR THE TRUSS COMPONENT DESIGN SHOWN. THE SUITABILITY AND USE OF THIS COMPONENT FOR ANY BUILDING IS THE RESPONSIBILITY OF THE BUILDING DESIGNER PER ANSI/TPI 1 SEC. 2.

DOUGLAS FLEMING LICENSE No. 66648 STATE OF FLORIDA PROFESSIONAL ENGINEER

10/14/2010

TC LL	20.0 PSF	REF	R487-- 3314
TC DL	10.0 PSF	DATE	10/14/10
BC DL	10.0 PSF	DRW	HCUSR487 10287022
BC LL	0.0 PSF	HC-ENG	TCE/DF
TOT.LD.	40.0 PSF	SEQN-	67663
DUR.FAC.	1.25	FROM	AH
SPACING	24.0"	JREF-	1U61487_Z01

THIS DWG PREPARED FROM COMPUTER INPUT (LOADS & DIMENSIONS) SUBMITTED BY TRUSS MFR.

(9-244--Fill in later EDGLEY -- , ** - CJ3)

Top chord 2x4 SP #2 Dense
Bot chord 2x4 SP #2 Dense

Roof overhang supports 2.00 psf soffit load.

Bottom chord checked for 10.00 psf non-concurrent live load.

Provide (2) 16d common nails(0.162"x3.5"), toe nailed at Top chord.
Provide (2) 16d common nails(0.162"x3.5"), toe nailed at Bot chord.

110 mph wind, 15.00 ft mean hgt, ASCE 7-05, CLOSED bldg, Located anywhere in roof, CAT II, EXP C, wind TC DL=5.0 psf, wind BC DL=5.0 psf. Iw=1.00 GCpi(+/-)=0.18

Wind reactions based on MWFRS pressures.

Deflection meets L/240 live and L/180 total load.

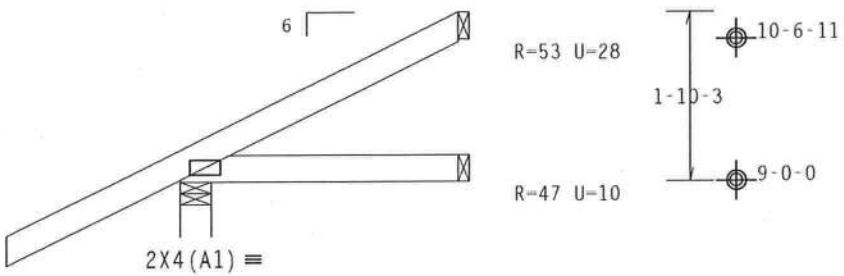

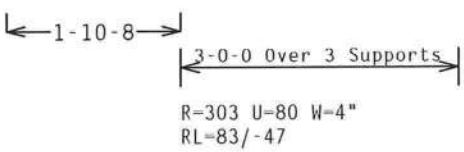

Design Crit: FBC2007Res/TPI-2002(STD)

PLT TYP. Wave FT/RT=20%(0%)/0(0) 9.02.03.0610.16 QTY: 4 FL/-/4/-/-/R/- Scale =.5"/Ft.

ALPINE
ITW Building Components Group Inc.
Haines City, FL 33844
FL COA #0 278

WARNING TRUSSES REQUIRE EXTREME CARE IN FABRICATION, HANDLING, SHIPPING, INSTALLING AND BRACING. REFER TO BCSI (BUILDING COMPONENT SAFETY INFORMATION), PUBLISHED BY TPI (TRUSS PLATE INSTITUTE, 218 NORTH LEE STREET, SUITE 312, ALEXANDRIA, VA, 22314) AND WTCA (WOOD TRUSS COUNCIL OF AMERICA, 6300 ENTERPRISE LANE, MADISON, WI 53719) FOR SAFETY PRACTICES PRIOR TO PERFORMING THESE FUNCTIONS. UNLESS OTHERWISE INDICATED TOP CHORD SHALL HAVE PROPERLY ATTACHED STRUCTURAL PANELS AND BOTTOM CHORD SHALL HAVE A PROPERLY ATTACHED RIGID CEILING.

IMPORTANTFURNISH A COPY OF THIS DESIGN TO THE INSTALLATION CONTRACTOR. ITW BCG, INC. SHALL NOT BE RESPONSIBLE FOR ANY DEVIATION FROM THIS DESIGN; ANY FAILURE TO BUILD THE TRUSS IN CONFORMANCE WITH TPI1; OR FABRICATING, HANDLING, SHIPPING, INSTALLING & BRACING OF TRUSSES.
DESIGN CONFORMS WITH APPLICABLE PROVISIONS OF NDS (NATIONAL DESIGN SPEC, BY AF&PA) AND TPI. ITW BCG, INC. CONNECTOR PLATES ARE MADE OF 20/18/16GA (W,H/SS/k) ASTM A653 GRADE 40/60 (W, K/H,SS) GALV. STEEL. APPLY PLATES TO EACH FACE OF TRUSS AND, UNLESS OTHERWISE LOCATED ON THIS DESIGN, POSITION PER DRAWINGS 160A-2. ANY INSPECTION OF PLATES FOLLOWED BY (1) SHALL BE PER ANNEX A3 OF TPI1-2002 SEC.3. A SEAL ON THIS DRAWING INDICATES ACCEPTANCE OF PROFESSIONAL ENGINEERING RESPONSIBILITY SOLELY FOR THE TRUSS COMPONENT DESIGN SHOWN. THE SUITABILITY AND USE OF THIS COMPONENT FOR ANY BUILDING IS THE RESPONSIBILITY OF THE BUILDING DESIGNER PER ANSI/TPI 1 SEC. 2.

DOUGLAS FLEMING LICENSE No. 66648 STATE OF FLORIDA PROFESSIONAL ENGINEER
10/14/2010

TC LL	20.0 PSF	REF	R487-- 3315
TC DL	10.0 PSF	DATE	10/14/10
BC DL	10.0 PSF	DRW	HCUSR487 10287037
BC LL	0.0 PSF	HC-ENG	TCE/DF
TOT.LD.	40.0 PSF	SEQN-	67656
DUR.FAC.	1.25	FROM	AH
SPACING	24.0"	JREF-	1U61487_Z01

(9-244--Fill in later EDGLEY -- , ** - CJ1)

Top chord 2x4 SP #2 Dense
Bot chord 2x4 SP #2 Dense

Roof overhang supports 2.00 psf soffit load.

Bottom chord checked for 10.00 psf non-concurrent live load.

Provide (2) 16d common nails(0.162"x3.5"), toe nailed at Top chord.
Provide (2) 16d common nails(0.162"x3.5"), toe nailed at Bot chord.

110 mph wind, 15.00 ft mean hgt, ASCE 7-05, CLOSED bldg, Located anywhere in roof, CAT II, EXP C, wind TC DL=5.0 psf, wind BC DL=5.0 psf. Iw=1.00 GCpi(+/-)=0.18

Wind reactions based on MWFRS pressures.

Deflection meets L/240 live and L/180 total load.

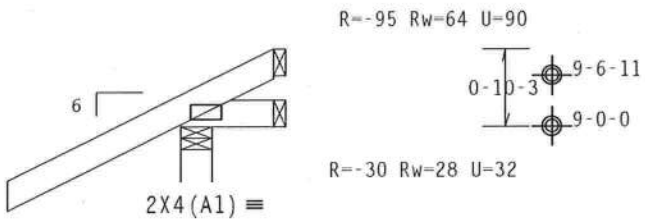

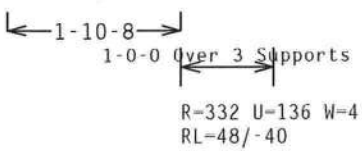

Design Crit: FBC2007Res/TPI-2002(STD)

PLT TYP. Wave FT/RT=20%(0%)/0(0) 9.03.03.0610.16 QTY 18 FL/-/4/-/-/R/- Scale =.5"/Ft.

ALPINE
ITW Building Components Group Inc.
Haines City, FL 33844
FL COA #0 278

WARNING TRUSSES REQUIRE EXTREME CARE IN FABRICATION, HANDLING, SHIPPING, INSTALLING AND BRACING. REFER TO BCSI (BUILDING COMPONENT SAFETY INFORMATION), PUBLISHED BY TPI (TRUSS PLATE INSTITUTE, 218 NORTH LEE STREET, SUITE 312, ALEXANDRIA, VA, 22314) AND WTCA (WOOD TRUSS COUNCIL OF AMERICA, 6300 ENTERPRISE LANE, MADISON, WI 53719) FOR SAFETY PRACTICES PRIOR TO PERFORMING THESE FUNCTIONS. UNLESS OTHERWISE INDICATED TOP CHORD SHALL HAVE PROPERLY ATTACHED STRUCTURAL PANELS AND BOTTOM CHORD SHALL HAVE A PROPERLY ATTACHED RIGID CEILING.

IMPORTANTFURNISH A COPY OF THIS DESIGN TO THE INSTALLATION CONTRACTOR. ITW BCG, INC. SHALL NOT BE RESPONSIBLE FOR ANY DEVIATION FROM THIS DESIGN; ANY FAILURE TO BUILD THE TRUSS IN CONFORMANCE WITH TPI; OR FABRICATING, HANDLING, SHIPPING, INSTALLING & BRACING OF TRUSSES. DESIGN CONFORMS WITH APPLICABLE PROVISIONS OF NDS (NATIONAL DESIGN SPEC. BY AF&PA) AND TPI. ITW BCG CONNECTOR PLATES ARE MADE OF 20/18/16GA (W,H/SS/K) ASTM A653 GRADE 40/60 (W, K/H,SS) GALV. STEEL. APPLY PLATES TO EACH FACE OF TRUSS AND, UNLESS OTHERWISE LOCATED ON THIS DESIGN, POSITION PER DRAWINGS 1604. ANY INSPECTION OF PLATES FOLLOWED BY (I) SHALL BE PER ANNEX A3 OF TPI1-2002 SEC.3. A SEAL ON THIS DRAWING INDICATES ACCEPTANCE OF PROFESSIONAL ENGINEERING RESPONSIBILITY SOLELY FOR THE TRUSS COMPONENT DESIGN SHOWN. THE SUITABILITY AND USE OF THIS COMPONENT FOR ANY BUILDING IS THE RESPONSIBILITY OF THE BUILDING DESIGNER PER ANSI/TPI 1 SEC. 2.

DOUGLAS FLEMING LICENSE No. 66648 STATE OF FLORIDA PROFESSIONAL ENGINEER
10/14/2010

TC LL	20.0 PSF	REF	R487-- 3316
TC DL	10.0 PSF	DATE	10/14/10
BC DL	10.0 PSF	DRW	HCUSR487 10287045
BC LL	0.0 PSF	HC-ENG	TCE/DF
TOT.LD.	40.0 PSF	SEQN-	67660
DUR.FAC.	1.25	FROM	AH
SPACING	24.0"	JREF-	1U61487_Z01

THIS DWG PREPARED FROM COMPUTER INPUT (LOADS & DIMENSIONS) SUBMITTED BY TRUSS MFR.

(9-244--Fill in later EDGLEY -- , ** - CJ5A)

Top chord 2x4 SP #2 Dense
Bot chord 2x4 SP #2 Dense

Roof overhang supports 2.00 psf soffit load.

Bottom chord checked for 10.00 psf non-concurrent live load.

Provide (2) 16d common nails(0.162"x3.5"), toe nailed at Top chord.
Provide (2) 16d common nails(0.162"x3.5"), toe nailed at Bot chord.

110 mph wind, 15.00 ft mean hgt, ASCE 7-05, CLOSED bldg, not located within 4.50 ft from roof edge, CAT II, EXP C, wind TC DL=5.0 psf, wind BC DL=5.0 psf. Iw=1.00 GCpi(+/-)=0.18

Wind reactions based on MWFRS pressures.

Deflection meets L/240 live and L/180 total load.

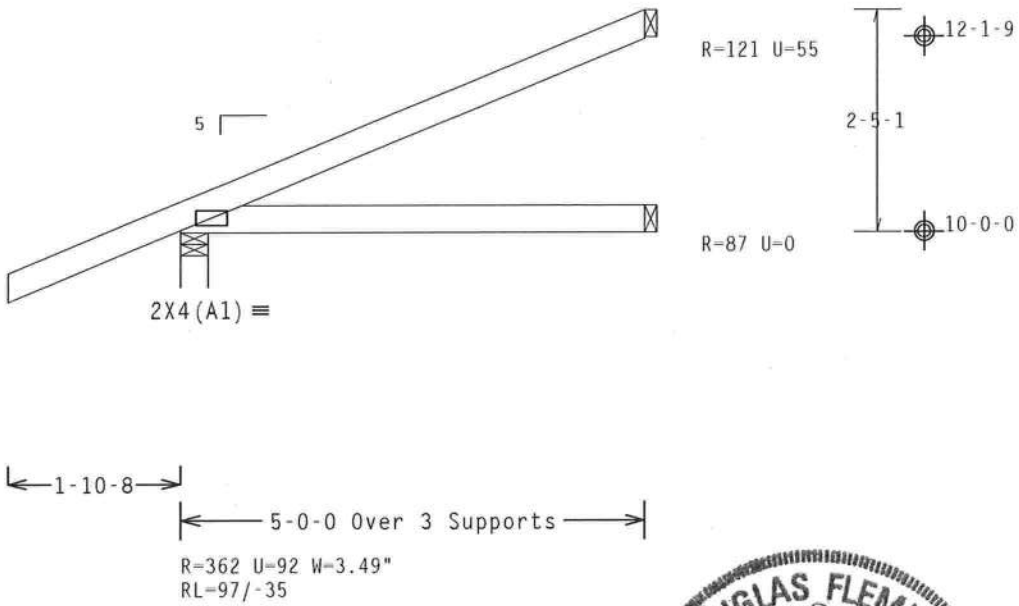

Design Crit: FBC2007Res/TPI-2002(STD)

PLT TYP. Wave FT/RT=20%(0%)/0(0) 9.03.03.0610.16 QTY 4 FL/-/4/-/-/R/- Scale =.5"/Ft.

ALPINE
ITW Building Components Group Inc.
Haines City, FL 33844
FL COA #0 278

WARNING TRUSSES REQUIRE EXTREME CARE IN FABRICATION, HANDLING, SHIPPING, INSTALLING AND BRACING. REFER TO BCSI (BUILDING COMPONENT SAFETY INFORMATION), PUBLISHED BY TPI (TRUSS PLATE INSTITUTE, 218 NORTH LEE STREET, SUITE 312, ALEXANDRIA, VA. 22314) AND WTCA (WOOD TRUSS COUNCIL OF AMERICA, 6300 ENTERPRISE LANE, MADISON, WI 53719) FOR SAFETY PRACTICES PRIOR TO PERFORMING THESE FUNCTIONS. UNLESS OTHERWISE INDICATED TOP CHORD SHALL HAVE PROPERLY ATTACHED STRUCTURAL PANELS AND BOTTOM CHORD SHALL HAVE A PROPERLY ATTACHED RIGID CEILING.

IMPORTANTFURNISH A COPY OF THIS DESIGN TO THE INSTALLATION CONTRACTOR. ITW BCG, INC. SHALL NOT BE RESPONSIBLE FOR ANY DEVIATION FROM THIS DESIGN; ANY FAILURE TO BUILD THE TRUSS IN CONFORMANCE WITH TPI; OR FABRICATING, HANDLING, SHIPPING, INSTALLING & BRACING OF TRUSSES. DESIGN CONFORMS WITH APPLICABLE PROVISIONS OF NDS (NATIONAL DESIGN SPEC, BY AF&PA) AND TPI. ITW BCG CONNECTOR PLATES ARE MADE OF 20/18/16GA (W,H/SS/K) ASTM A653 GRADE 40/60 (W, K/H,SS) GALV. STEEL. APPLY PLATES TO EACH FACE OF TRUSS AND, UNLESS OTHERWISE LOCATED ON THIS DESIGN, POSITION PER DRAWINGS 1604. ANY INSPECTION OF PLATES FOLLOWED BY (1) SHALL BE PER ANNEX A3 OF TPI1-2002 SEC.3. A SEAL ON THIS DRAWING INDICATES ACCEPTANCE OF PROFESSIONAL ENGINEERING RESPONSIBILITY SOLELY FOR THE TRUSS COMPONENT DESIGN SHOWN. THE SUITABILITY AND USE OF THIS COMPONENT FOR ANY BUILDING IS THE RESPONSIBILITY OF THE BUILDING DESIGNER PER ANSI/TPI 1 SEC. 2.

DOUGLAS FLEMING LICENSE No. 66648 STATE OF FLORIDA PROFESSIONAL ENGINEER

10/14/2010

TC LL	20.0 PSF	REF	R487-- 3317
TC DL	10.0 PSF	DATE	10/14/10
BC DL	10.0 PSF	DRW	HCUSR487 10287069
BC LL	0.0 PSF	HC-ENG	TCE/DF
TOT.LD.	40.0 PSF	SEQN-	67573
DUR.FAC.	1.25	FROM	AH
SPACING	24.0"	JREF-	1U61487_Z01

THIS DWG PREPARED FROM COMPUTER INPUT (LOADS & DIMENSIONS) SUBMITTED BY TRUSS MFR.

(9-244--Fill in later EDGLEY -- , ** - HJ7A)

Top chord 2x4 SP #2 Dense
Bot chord 2x4 SP #2 Dense
Webs 2x4 SP #3

Hipjack supports 7-0-0 setback jacks with no webs.

Deflection meets L/240 live and L/180 total load.

110 mph wind, 15.00 ft mean hgt, ASCE 7-05, CLOSED bldg, not located within 4.50 ft from roof edge, CAT II, EXP C, wind TC DL=5.0 psf, wind BC DL=5.0 psf. Iw=1.00 GCpi(+/-)=0.18

Wind reactions based on MWFRS pressures.

Provide (2) 16d common nails(0.162"x3.5"), toe nailed at Top chord.
Provide (3) 16d common nails(0.162"x3.5"), toe nailed at Bot chord.

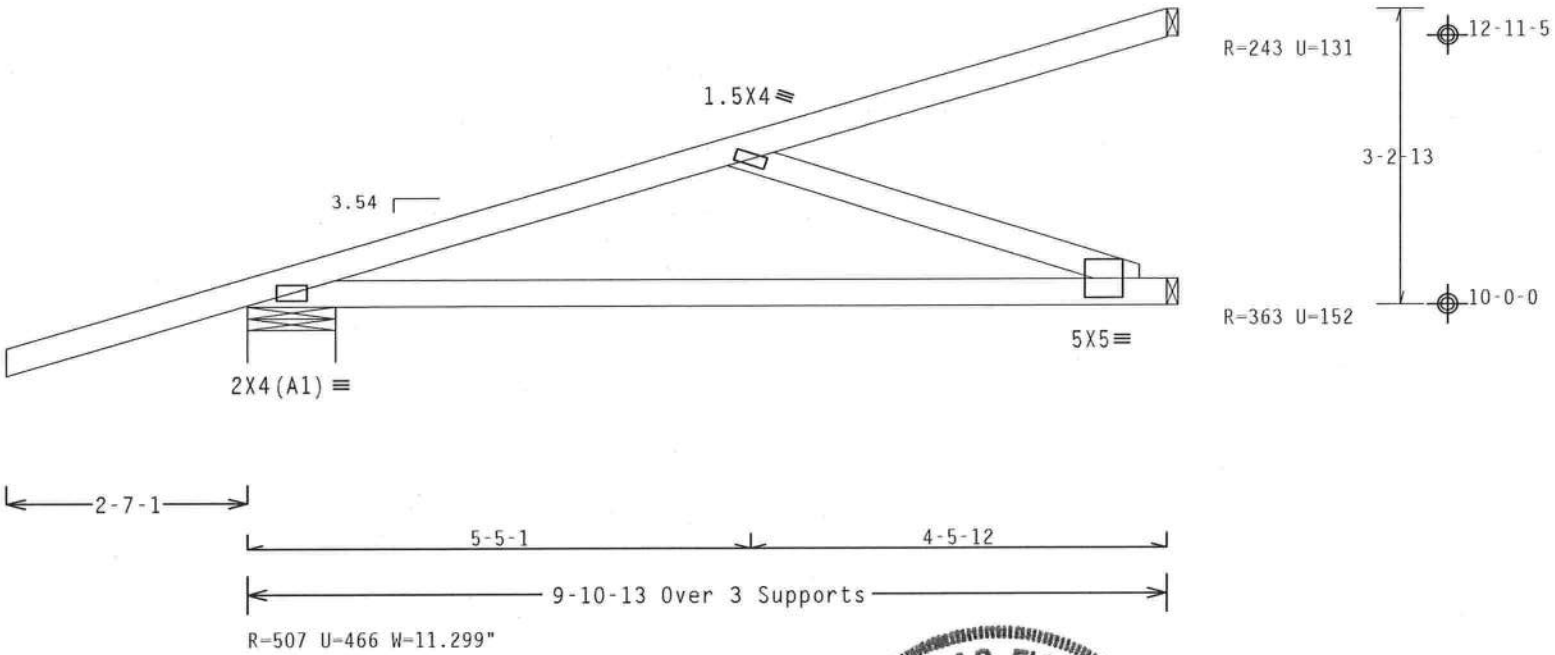

Design Crit: FBC2007Res/TPI-2002(STD)

PLT TYP. Wave | FT/RT=20%(0%)/0(0) | 9.0[illegible].03.0319.17 | QTY 2 | FL/-/4/-/-/R/- | Scale =.5"/Ft.

ALPINE
ITW Building Components Group Inc.
Haines City, FL 33844
FL COA #0 278

WARNING TRUSSES REQUIRE EXTREME CARE IN FABRICATION, HANDLING, SHIPPING, INSTALLING AND BRACING. REFER TO BCSI (BUILDING COMPONENT SAFETY INFORMATION), PUBLISHED BY TPI (TRUSS PLATE INSTITUTE, 218 NORTH LEE STREET, SUITE 312, ALEXANDRIA, VA, 22314) AND WTCA (WOOD TRUSS COUNCIL OF AMERICA, 6300 ENTERPRISE LANE, MADISON, WI 53719) FOR SAFETY PRACTICES PRIOR TO PERFORMING THESE FUNCTIONS. UNLESS OTHERWISE INDICATED TOP CHORD SHALL HAVE PROPERLY ATTACHED STRUCTURAL PANELS AND BOTTOM CHORD SHALL HAVE A PROPERLY ATTACHED RIGID CEILING.

IMPORTANTFURNISH A COPY OF THIS DESIGN TO THE INSTALLATION CONTRACTOR. ITW BCG, INC. SHALL NOT BE RESPONSIBLE FOR ANY DEVIATION FROM THIS DESIGN; ANY FAILURE TO BUILD THE TRUSS IN CONFORMANCE WITH TPI; OR FABRICATING, HANDLING, SHIPPING, INSTALLING & BRACING OF TRUSSES. DESIGN CONFORMS WITH APPLICABLE PROVISIONS OF NDS (NATIONAL DESIGN SPEC, BY AF&PA) AND TPI. [illegible] CONNECTOR PLATES ARE MADE OF 20/18/16GA (W,H/SS/k) ASTM A653 GRADE 40/60 (W, K/H,SS) GALV. STEEL. APPLY PLATES TO EACH FACE OF TRUSS AND, UNLESS OTHERWISE LOCATED ON THIS DESIGN, POSITION PER DRAWINGS 160[illegible]. ANY INSPECTION OF PLATES FOLLOWED BY (1) SHALL BE PER ANNEX A3 OF TPI1-2002 SEC.3. A SEAL ON THIS DRAWING INDICATES ACCEPTANCE OF PROFESSIONAL ENGINEERING RESPONSIBILITY SOLELY FOR THE TRUSS COMPONENT DESIGN SHOWN. THE SUITABILITY AND USE OF THIS COMPONENT FOR ANY BUILDING IS THE RESPONSIBILITY OF THE BUILDING DESIGNER PER ANSI/TPI 1 SEC. 2.

DOUGLAS FLEMING LICENSE No. 66648 STATE OF FLORIDA PROFESSIONAL ENGINEER
10/14/2010

TC LL	20.0 PSF	REF	R487-- 3318
TC DL	10.0 PSF	DATE	10/14/10
BC DL	10.0 PSF	DRW	HCUSR487 10287006
BC LL	0.0 PSF	HC-ENG	KD/DF
TOT.LD.	40.0 PSF	SEQN-	151542
DUR.FAC.	1.25	FROM	AH
SPACING	24.0"	JREF-	1U61487_Z01

THIS DWG PREPARED FROM COMPUTER INPUT (LOADS & DIMENSIONS) SUBMITTED BY TRUSS MFR.

(9-244--Fill in later EDGLEY -- , ** - CJ3A)

Top chord 2x4 SP #2 Dense
Bot chord 2x4 SP #2 Dense

Roof overhang supports 2.00 psf soffit load.

Bottom chord checked for 10.00 psf non-concurrent live load.

Provide (2) 16d common nails(0.162"x3.5"), toe nailed at Top chord.
Provide (2) 16d common nails(0.162"x3.5"), toe nailed at Bot chord.

110 mph wind, 15.00 ft mean hgt, ASCE 7-05, CLOSED bldg, Located anywhere in roof, CAT II, EXP C, wind TC DL=5.0 psf, wind BC DL=5.0 psf. Iw=1.00 GCpi(+/-)=0.18

Wind reactions based on MWFRS pressures.

Deflection meets L/240 live and L/180 total load.

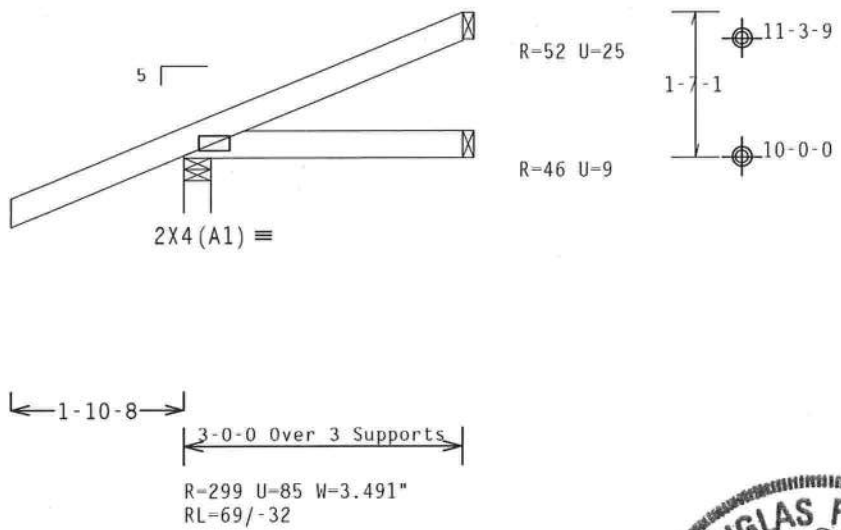

Design Crit: FBC2007Res/TPI-2002(STD)

PLT TYP. Wave | FT/RT=20%(0%)/0(0) | 9.03.03.0610.16 | QTY 4 | FL/-/4/-/-/R/- | Scale =.5"/Ft.

ALPINE
ITW Building Components Group Inc.
Haines City, FL 33844
FL COA #0 278

WARNING TRUSSES REQUIRE EXTREME CARE IN FABRICATION, HANDLING, SHIPPING, INSTALLING AND BRACING. REFER TO BCSI (BUILDING COMPONENT SAFETY INFORMATION), PUBLISHED BY TPI (TRUSS PLATE INSTITUTE, 218 NORTH LEE STREET, SUITE 312, ALEXANDRIA, VA, 22314) AND WTCA (WOOD TRUSS COUNCIL OF AMERICA, 6300 ENTERPRISE LANE, MADISON, WI 53719) FOR SAFETY PRACTICES PRIOR TO PERFORMING THESE FUNCTIONS. UNLESS OTHERWISE INDICATED TOP CHORD SHALL HAVE PROPERLY ATTACHED STRUCTURAL PANELS AND BOTTOM CHORD SHALL HAVE A PROPERLY ATTACHED RIGID CEILING.

IMPORTANTFURNISH A COPY OF THIS DESIGN TO THE INSTALLATION CONTRACTOR. ITW BCG, INC. SHALL NOT BE RESPONSIBLE FOR ANY DEVIATION FROM THIS DESIGN; ANY FAILURE TO BUILD THE TRUSS IN CONFORMANCE WITH TPI; OR FABRICATING, HANDLING, SHIPPING, INSTALLING & BRACING OF TRUSSES. DESIGN CONFORMS WITH APPLICABLE PROVISIONS OF NDS (NATIONAL DESIGN SPEC, BY AF&PA) AND TPI. ITW BCG CONNECTOR PLATES ARE MADE OF 20/18/16GA (W,H/SS/K) ASTM A653 GRADE 40/60 (W, K/H,SS) GALV. STEEL. APPLY PLATES TO EACH FACE OF TRUSS AND, UNLESS OTHERWISE LOCATED ON THIS DESIGN, POSITION PER DRAWINGS 160A. ANY INSPECTION OF PLATES FOLLOWED BY (1) SHALL BE PER ANNEX A3 OF TPI1-2002 SEC.3. A SEAL ON THIS DRAWING INDICATES ACCEPTANCE OF PROFESSIONAL ENGINEERING RESPONSIBILITY SOLELY FOR THE TRUSS COMPONENT DESIGN SHOWN. THE SUITABILITY AND USE OF THIS COMPONENT FOR ANY BUILDING IS THE RESPONSIBILITY OF THE BUILDING DESIGNER PER ANSI/TPI 1 SEC. 2.

DOUGLAS FLEMING LICENSE No. 66648 STATE OF FLORIDA PROFESSIONAL ENGINEER

10/14/2010

TC LL	20.0 PSF	REF	R487-- 3319
TC DL	10.0 PSF	DATE	10/14/10
BC DL	10.0 PSF	DRW	HCUSR487 10287026
BC LL	0.0 PSF	HC-ENG	TCE/DF
TOT.LD.	40.0 PSF	SEQN-	67576
DUR.FAC.	1.25	FROM	AH
SPACING	24.0"	JREF-	1U61487_Z01

THIS DWG PREPARED FROM COMPUTER INPUT (LOADS & DIMENSIONS) SUBMITTED BY TRUSS MFR.

(9-244--Fill in later EDGLEY -- , ** - CJ1A)

Top chord 2x4 SP #2 Dense
Bot chord 2x4 SP #2 Dense

Roof overhang supports 2.00 psf soffit load.

Bottom chord checked for 10.00 psf non-concurrent live load.

Provide (2) 16d common nails(0.162"x3.5"), toe nailed at Top chord.
Provide (2) 16d common nails(0.162"x3.5"), toe nailed at Bot chord.

110 mph wind, 15.00 ft mean hgt, ASCE 7-05, CLOSED bldg, Located anywhere in roof, CAT II, EXP C, wind TC DL=5.0 psf, wind BC DL=5.0 psf. Iw=1.00 GCpi(+/-)=0.18

Wind reactions based on MWFRS pressures.

Deflection meets L/240 live and L/180 total load.

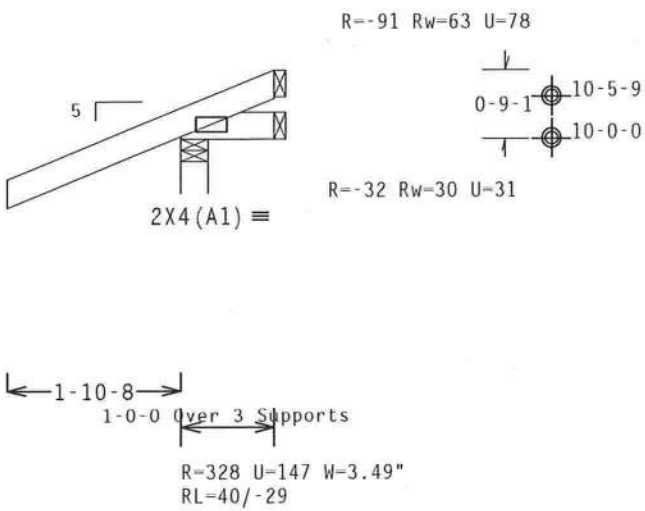

Design Crit: FBC2007Res/TPI-2002(STD)

PLT TYP. Wave FT/RT=20%(0%)/0(0) 09.02.03.0610.16 QTY:4 FL/-/4/-/-/R/- Scale =.5"/Ft.

ALPINE
ITW Building Components Group Inc.
Haines City, FL 33844
FL COA #0 278

WARNING TRUSSES REQUIRE EXTREME CARE IN FABRICATION, HANDLING, SHIPPING, INSTALLING AND BRACING. REFER TO BCSI (BUILDING COMPONENT SAFETY INFORMATION), PUBLISHED BY TPI (TRUSS PLATE INSTITUTE, 218 NORTH LEE STREET, SUITE 312, ALEXANDRIA, VA, 22314) AND WTCA (WOOD TRUSS COUNCIL OF AMERICA, 6300 ENTERPRISE LANE, MADISON, WI 53719) FOR SAFETY PRACTICES PRIOR TO PERFORMING THESE FUNCTIONS. UNLESS OTHERWISE INDICATED TOP CHORD SHALL HAVE PROPERLY ATTACHED STRUCTURAL PANELS AND BOTTOM CHORD SHALL HAVE A PROPERLY ATTACHED RIGID CEILING.

IMPORTANTFURNISH A COPY OF THIS DESIGN TO THE INSTALLATION CONTRACTOR. ITW BCG, INC. SHALL NOT BE RESPONSIBLE FOR ANY DEVIATION FROM THIS DESIGN; ANY FAILURE TO BUILD THE TRUSS IN CONFORMANCE WITH TPI1; OR FABRICATING, HANDLING, SHIPPING, INSTALLING & BRACING OF TRUSSES.
DESIGN CONFORMS WITH APPLICABLE PROVISIONS OF NDS (NATIONAL DESIGN SPEC, BY AF&PA) AND TPI. ITW BCG CONNECTOR PLATES ARE MADE OF 20/18/16GA (W,H/SS/K) ASTM A653 GRADE 40/60 (W, K/H,SS) GALV. STEEL. APPLY PLATES TO EACH FACE OF TRUSS AND, UNLESS OTHERWISE LOCATED ON THIS DESIGN, POSITION PER DRAWINGS 160A-Z. ANY INSPECTION OF PLATES FOLLOWED BY (I) SHALL BE PER ANNEX A3 OF TPI1-2002 SEC.3. A SEAL ON THIS DRAWING INDICATES ACCEPTANCE OF PROFESSIONAL ENGINEERING RESPONSIBILITY SOLELY FOR THE TRUSS COMPONENT DESIGN SHOWN. THE SUITABILITY AND USE OF THIS COMPONENT FOR ANY BUILDING IS THE RESPONSIBILITY OF THE BUILDING DESIGNER PER ANSI/TPI 1 SEC. 2.

DOUGLAS FLEMING LICENSE No. 66848 STATE OF FLORIDA PROFESSIONAL ENGINEER
10/14/2010

TC LL	20.0 PSF	REF	R487-- 3320
TC DL	10.0 PSF	DATE	10/14/10
BC DL	10.0 PSF	DRW	HCUSR487 10287027
BC LL	0.0 PSF	HC-ENG	TCE/DF
TOT.LD.	40.0 PSF	SEQN-	67579
DUR.FAC.	1.25	FROM	AH
SPACING	24.0"	JREF-	1U61487_Z01

THIS DWG PREPARED FROM COMPUTER INPUT (LOADS & DIMENSIONS) SUBMITTED BY TRUSS MFR.

(9-244--Fill in later EDGLEY -- , ** - EJ7S)

Top chord 2x4 SP #2 Dense
Bot chord 2x4 SP #2 Dense
Webs 2x4 SP #3

Roof overhang supports 2.00 psf soffit load.

Bottom chord checked for 10.00 psf non-concurrent live load.

Provide (2) 16d common nails(0.162"x3.5"), toe nailed at Top chord.
Provide (2) 16d common nails(0.162"x3.5"), toe nailed at Bot chord.

110 mph wind, 15.00 ft mean hgt, ASCE 7-05, CLOSED bldg, Located anywhere in roof, CAT II, EXP C, wind TC DL=5.0 psf, wind BC DL=5.0 psf. Iw=1.00 GCpi(+/-)=0.18

Wind reactions based on MWFRS pressures.

Deflection meets L/240 live and L/180 total load.

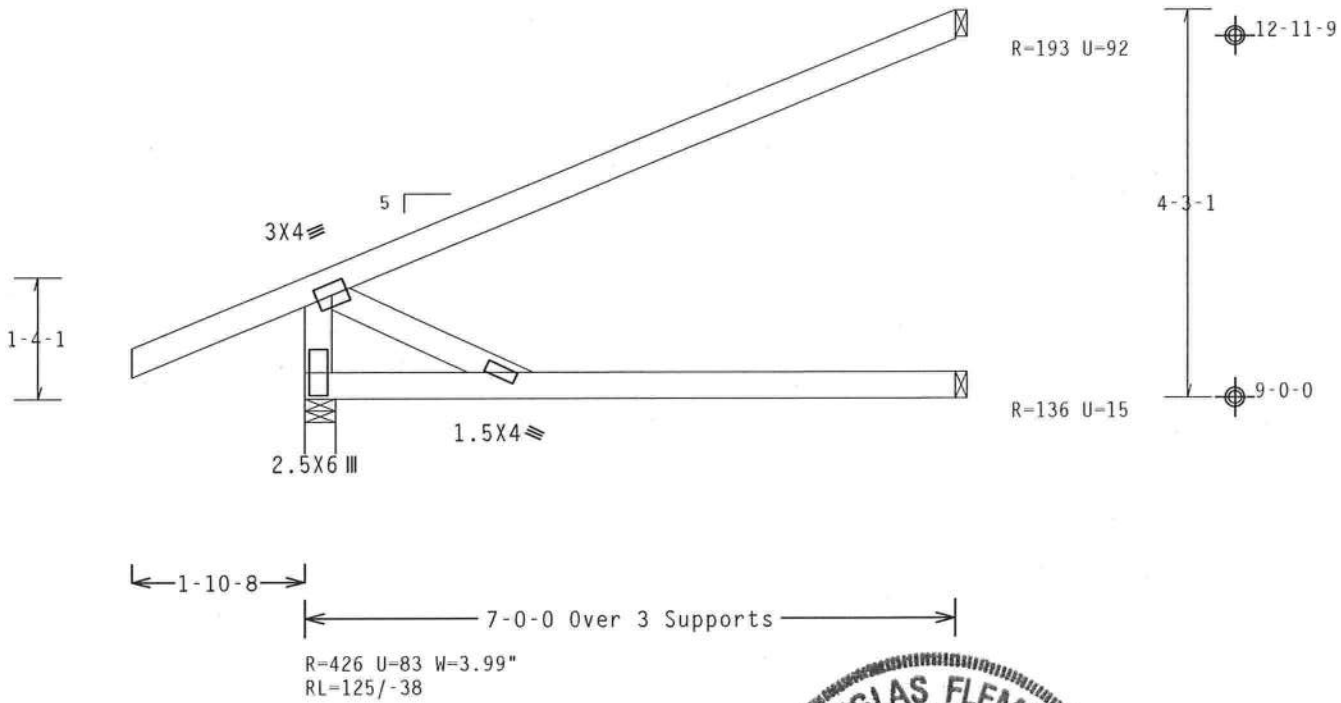

Design Crit: FBC2007Res/TPI-2002(STD)

PLT TYP. Wave FT/RT=20%(0%)/0(0) 9.03.03.0610.16 QTY 7 FL/-/4/-/-/R/- Scale =.5"/Ft.

ALPINE
ITW Building Components Group Inc.
Haines City, FL 33844
FL COA #0 278

WARNING TRUSSES REQUIRE EXTREME CARE IN FABRICATION, HANDLING, SHIPPING, INSTALLING AND BRACING. REFER TO BCSI (BUILDING COMPONENT SAFETY INFORMATION), PUBLISHED BY TPI (TRUSS PLATE INSTITUTE, 218 NORTH LEE STREET, SUITE 312, ALEXANDRIA, VA, 22314) AND WTCA (WOOD TRUSS COUNCIL OF AMERICA, 6300 ENTERPRISE LANE, MADISON, WI 53719) FOR SAFETY PRACTICES PRIOR TO PERFORMING THESE FUNCTIONS. UNLESS OTHERWISE INDICATED TOP CHORD SHALL HAVE PROPERLY ATTACHED STRUCTURAL PANELS AND BOTTOM CHORD SHALL HAVE A PROPERLY ATTACHED RIGID CEILING.

IMPORTANTFURNISH A COPY OF THIS DESIGN TO THE INSTALLATION CONTRACTOR. ITW BCG, INC. SHALL NOT BE RESPONSIBLE FOR ANY DEVIATION FROM THIS DESIGN; ANY FAILURE TO BUILD THE TRUSS IN CONFORMANCE WITH TPI; OR FABRICATING, HANDLING, SHIPPING, INSTALLING & BRACING OF TRUSSES. DESIGN CONFORMS WITH APPLICABLE PROVISIONS OF NDS (NATIONAL DESIGN SPEC, BY AF&PA) AND TPI. THIS TRUSS CONNECTOR PLATES ARE MADE OF 20/18/16GA (W,H/SS/K) ASTM A653 GRADE 40/60 (W, K/H,SS) GALV. STEEL. APPLY PLATES TO EACH FACE OF TRUSS AND, UNLESS OTHERWISE LOCATED ON THIS DESIGN, POSITION PER DRAWINGS 160-2. ANY INSPECTION OF PLATES FOLLOWED BY (1) SHALL BE PER ANNEX A3 OF TPI1-2002 SEC.3. A SEAL ON THIS DRAWING INDICATES ACCEPTANCE OF PROFESSIONAL ENGINEERING RESPONSIBILITY SOLELY FOR THE TRUSS COMPONENT DESIGN SHOWN. THE SUITABILITY AND USE OF THIS COMPONENT FOR ANY BUILDING IS THE RESPONSIBILITY OF THE BUILDING DESIGNER PER ANSI/TPI 1 SEC. 2.

DOUGLAS FLEMING LICENSE No. 66648 STATE OF FLORIDA PROFESSIONAL ENGINEER
10/14/2010

TC LL	20.0 PSF	REF	R487-- 3321
TC DL	10.0 PSF	DATE	10/14/10
BC DL	10.0 PSF	DRW	HCUSR487 10287054
BC LL	0.0 PSF	HC-ENG	TCE/DF *
TOT.LD.	40.0 PSF	SEQN-	67647
DUR.FAC.	1.25	FROM	AH
SPACING	24.0"	JREF-	1U61487_Z01

THIS DWG PREPARED FROM COMPUTER INPUT (LOADS & DIMENSIONS) SUBMITTED BY TRUSS MFR.

(9-244--Fill in later EDGLEY -- , ** - EJ1.4)

Top chord 2x4 SP #2 Dense
Bot chord 2x4 SP #2 Dense

Roof overhang supports 2.00 psf soffit load.

Bottom chord checked for 10.00 psf non-concurrent live load.

MWFRS loads based on trusses located at least 7.50 ft. from roof edge.

110 mph wind, 15.00 ft mean hgt, ASCE 7-05, CLOSED bldg, Located anywhere in roof, CAT II, EXP C, wind TC DL=5.0 psf, wind BC DL=5.0 psf. Iw=1.00 GCpi(+/-)=0.18

Wind reactions based on MWFRS pressures.

Deflection meets L/240 live and L/180 total load.

Provide (2) 16d common nails(0.162"x3.5"), toe nailed at Top chord.
Provide (2) 16d common nails(0.162"x3.5"), toe nailed at Bot chord.

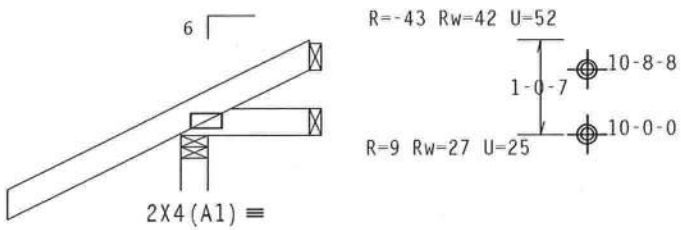

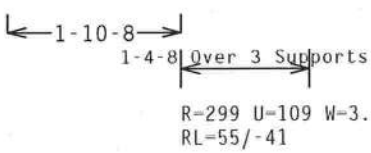

Design Crit: FBC2007Res/TPI-2002(STD)

PLT TYP. Wave FT/RT=20%(0%)/0(0) 09.02.03.0610.16 QTY: FL/-/4/-/-/R/- Scale =.5"/Ft.

ALPINE
ITW Building Components Group Inc.
Haines City, FL 33844
FL COA #0 278

WARNING TRUSSES REQUIRE EXTREME CARE IN FABRICATION, HANDLING, SHIPPING, INSTALLING AND BRACING. REFER TO BCSI (BUILDING COMPONENT SAFETY INFORMATION), PUBLISHED BY TPI (TRUSS PLATE INSTITUTE, 218 NORTH LEE STREET, SUITE 312, ALEXANDRIA, VA. 22314) AND WTCA (WOOD TRUSS COUNCIL OF AMERICA, 6300 ENTERPRISE LANE, MADISON, WI 53719) FOR SAFETY PRACTICES PRIOR TO PERFORMING THESE FUNCTIONS. UNLESS OTHERWISE INDICATED TOP CHORD SHALL HAVE PROPERLY ATTACHED STRUCTURAL PANELS AND BOTTOM CHORD SHALL HAVE A PROPERLY ATTACHED RIGID CEILING.

IMPORTANTFURNISH A COPY OF THIS DESIGN TO THE INSTALLATION CONTRACTOR. ITW BCG, INC. SHALL NOT BE RESPONSIBLE FOR ANY DEVIATION FROM THIS DESIGN; ANY FAILURE TO BUILD THE TRUSS IN CONFORMANCE WITH TPI; OR FABRICATING, HANDLING, SHIPPING, INSTALLING & BRACING OF TRUSSES.
DESIGN CONFORMS WITH APPLICABLE PROVISIONS OF NDS (NATIONAL DESIGN SPEC, BY AF&PA) AND TPI. ITW BCG CONNECTOR PLATES ARE MADE OF 20/18/16GA (W,H/SS/K) ASTM A653 GRADE 40/60 (W, K/H,SS) GALV. STEEL. APPLY PLATES TO EACH FACE OF TRUSS AND, UNLESS OTHERWISE LOCATED ON THIS DESIGN, POSITION PER DRAWINGS 160A-Z. ANY INSPECTION OF PLATES FOLLOWED BY (1) SHALL BE PER ANNEX A3 OF TPI1-2002 SEC.3. A SEAL ON THIS DRAWING INDICATES ACCEPTANCE OF PROFESSIONAL ENGINEERING RESPONSIBILITY SOLELY FOR THE TRUSS COMPONENT DESIGN SHOWN. THE SUITABILITY AND USE OF THIS COMPONENT FOR ANY BUILDING IS THE RESPONSIBILITY OF THE BUILDING DESIGNER PER ANSI/TPI 1 SEC. 2.

DOUGLAS FLEMING LICENSE No. 66648 STATE OF FLORIDA PROFESSIONAL ENGINEER
10/14/2010

TC LL	20.0 PSF	REF R487-- 3322
TC DL	10.0 PSF	DATE 10/14/10
BC DL	10.0 PSF	DRW HCUSR487 10287032
BC LL	0.0 PSF	HC-ENG TCE/DF
TOT.LD.	40.0 PSF	SEQN- 67805
DUR.FAC.	1.25	FROM AH
SPACING	24.0"	JREF- 1U61487_Z01

THIS DWG PREPARED FROM COMPUTER INPUT (LOADS & DIMENSIONS) SUBMITTED BY TRUSS MFR.

(9-244--Fill in later EDGLEY -- , ** - HJ1.2)

Top chord 2x4 SP #2 Dense
Bot chord 2x4 SP #2 Dense

Hipjack supports 1-4-8 setback jacks with no webs.

Deflection meets L/240 live and L/180 total load.

110 mph wind, 15.00 ft mean hgt, ASCE 7-05, CLOSED bldg, Located anywhere in roof, CAT II, EXP C, wind TC DL=5.0 psf, wind BC DL=5.0 psf. Iw=1.00 GCpi(+/-)=0.18

Wind reactions based on MWFRS pressures.

Provide (2) 16d common nails(0.162"x3.5"), toe nailed at Top chord.
Provide (2) 16d common nails(0.162"x3.5"), toe nailed at Bot chord.

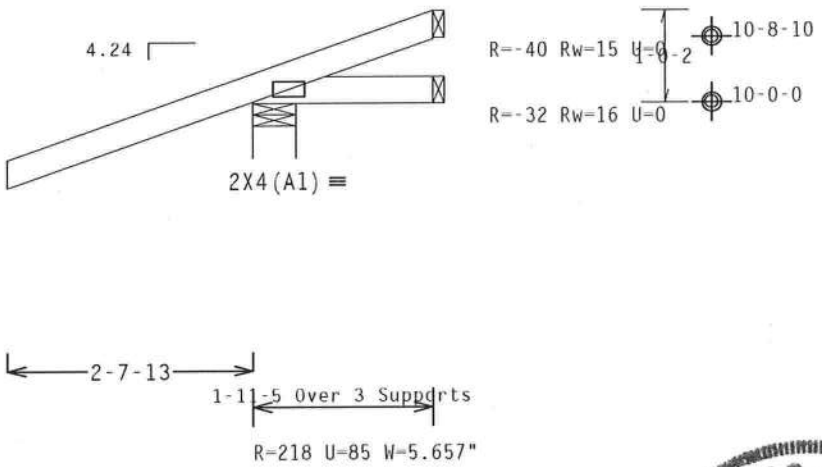

Design Crit: FBC2007Res/TPI-2002(STD)

PLT TYP. Wave FT/RT=20%(0%)/0(0) 9.02.03.0610.16 QTY 2 FL/-/4/-/-/R/- Scale =.5"/Ft.

ALPINE
ITW Building Components Group Inc.
Haines City, FL 33844
FL COA #0 278

WARNING TRUSSES REQUIRE EXTREME CARE IN FABRICATION, HANDLING, SHIPPING, INSTALLING AND BRACING. REFER TO BCSI (BUILDING COMPONENT SAFETY INFORMATION), PUBLISHED BY TPI (TRUSS PLATE INSTITUTE, 218 NORTH LEE STREET, SUITE 312, ALEXANDRIA, VA. 22314) AND WTCA (WOOD TRUSS COUNCIL OF AMERICA, 630 ENTERPRISE LANE, MADISON, WI 53719) FOR SAFETY PRACTICES PRIOR TO PERFORMING THESE FUNCTIONS. UNLESS OTHERWISE INDICATED TOP CHORD SHALL HAVE PROPERLY ATTACHED STRUCTURAL PANELS AND BOTTOM CHORD SHALL HAVE A PROPERLY ATTACHED RIGID CEILING.

IMPORTANTFURNISH A COPY OF THIS DESIGN TO THE INSTALLATION CONTRACTOR. ITW BCG, INC. SHALL NOT BE RESPONSIBLE FOR ANY DEVIATION FROM THIS DESIGN; ANY FAILURE TO BUILD THE TRUSS IN CONFORMANCE WITH TPI; OR FABRICATING, HANDLING, SHIPPING, INSTALLING & BRACING OF TRUSSES.
DESIGN CONFORMS WITH APPLICABLE PROVISIONS OF NDS (NATIONAL DESIGN SPEC, BY AF&PA) AND TPI. IT IS A VIOLATION OF LAW TO ALTER THIS DESIGN. CONNECTOR PLATES ARE MADE OF 20/18/16GA (W,H/SS/K) ASTM A653 GRADE 40/60 (W, K/H,SS) GALV. STEEL. APPLY PLATES TO EACH FACE OF TRUSS AND, UNLESS OTHERWISE LOCATED ON THIS DESIGN, POSITION PER DRAWINGS 160[illegible]. ANY INSPECTION OF PLATES FOLLOWED BY (1) SHALL BE PER ANNEX A3 OF TPI1-2002 SEC.3. A SEAL ON THIS DRAWING INDICATES ACCEPTANCE OF PROFESSIONAL ENGINEERING RESPONSIBILITY SOLELY FOR THE TRUSS COMPONENT DESIGN SHOWN. THE SUITABILITY AND USE OF THIS COMPONENT FOR ANY BUILDING IS THE RESPONSIBILITY OF THE BUILDING DESIGNER PER ANSI/TPI 1 SEC. 2.

DOUGLAS FLEMING LICENSE No. 66648 STATE OF FLORIDA PROFESSIONAL ENGINEER
10/14/2010

TC LL	20.0 PSF	REF	R487-- 3323
TC DL	10.0 PSF	DATE	10/14/10
BC DL	10.0 PSF	DRW	HCUSR487 10287021
BC LL	0.0 PSF	HC-ENG	TCE/DF
TOT.LD.	40.0 PSF	SEQN-	59107
DUR.FAC.	1.25	FROM	AH
SPACING	24.0"	JREF-	1U61487_Z01

THIS DWG PREPARED FROM COMPUTER INPUT (LOADS & DIMENSIONS) SUBMITTED BY TRUSS MFR.

(9-244--Fill in later EDGLEY -- , ** - EJ7H)

Top chord 2x4 SP #2 Dense
Bot chord 2x4 SP #2 Dense

Bottom chord checked for 10.00 psf non-concurrent live load.

Deflection meets L/240 live and L/180 total load.

Provide (2) 16d common nails(0.162"x3.5"), toe nailed at Top chord.
Provide (2) 16d common nails(0.162"x3.5"), toe nailed at Bot chord.

110 mph wind, 15.00 ft mean hgt, ASCE 7-05, CLOSED bldg, not located within 4.50 ft from roof edge, CAT II, EXP C, wind TC DL=5.0 psf, wind BC DL=5.0 psf. Iw=1.00 GCpi(+/-)=0.18

Wind reactions based on MWFRS pressures.

MWFRS loads based on trusses located at least 7.50 ft. from roof edge.

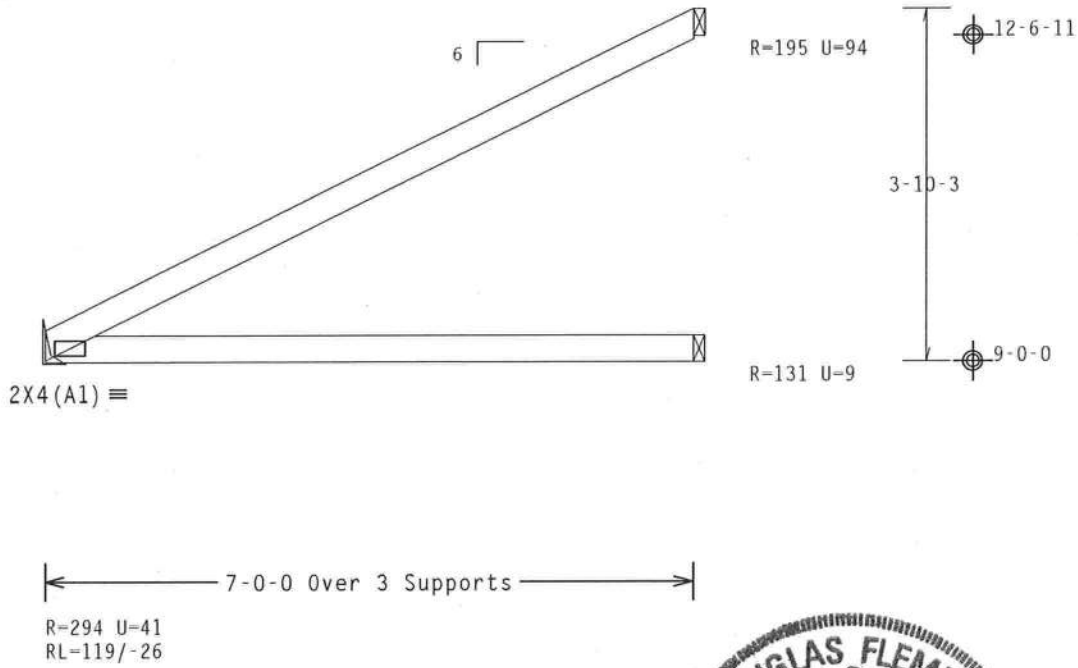

Design Crit: FBC2007Res/TPI-2002(STD)

PLT TYP. Wave

FT/RT=20%(0%)/0(0)

9.0.03.0610.16 QTY 3

FL/-/4/-/-/R/-

Scale =.5"/Ft.

ALPINE
ITW Building Components Group Inc.
Haines City, FL 33844
FL COA #0 278

WARNING TRUSSES REQUIRE EXTREME CARE IN FABRICATION, HANDLING, SHIPPING, INSTALLING AND BRACING. REFER TO BCSI (BUILDING COMPONENT SAFETY INFORMATION), PUBLISHED BY TPI (TRUSS PLATE INSTITUTE, 218 NORTH LEE STREET, SUITE 312, ALEXANDRIA, VA. 22314) AND WTCA (WOOD TRUSS COUNCIL OF AMERICA, 6300 ENTERPRISE LANE, MADISON, WI 53719) FOR SAFETY PRACTICES PRIOR TO PERFORMING THESE FUNCTIONS. UNLESS OTHERWISE INDICATED TOP CHORD SHALL HAVE PROPERLY ATTACHED STRUCTURAL PANELS AND BOTTOM CHORD SHALL HAVE A PROPERLY ATTACHED RIGID CEILING.

IMPORTANTFURNISH A COPY OF THIS DESIGN TO THE INSTALLATION CONTRACTOR. ITW BCG, INC. SHALL NOT BE RESPONSIBLE FOR ANY DEVIATION FROM THIS DESIGN; ANY FAILURE TO BUILD THE TRUSS IN CONFORMANCE WITH TPI; OR FABRICATING, HANDLING, SHIPPING, INSTALLING & BRACING OF TRUSSES.
DESIGN CONFORMS WITH APPLICABLE PROVISIONS OF NDS (NATIONAL DESIGN SPEC, BY AF&PA) AND TPI. ITW BCG, INC. CONNECTOR PLATES ARE MADE OF 20/18/16GA (W,H/SS/K) ASTM A653 GRADE 40/60 (W, K/H,SS) GALV. STEEL. APPLY PLATES TO EACH FACE OF TRUSS AND, UNLESS OTHERWISE LOCATED ON THIS DESIGN, POSITION PER DRAWINGS 1603. ANY INSPECTION OF PLATES FOLLOWED BY (1) SHALL BE PER ANNEX A3 OF TPI1-2002 SEC.3. A SEAL ON THIS DRAWING INDICATES ACCEPTANCE OF PROFESSIONAL ENGINEERING RESPONSIBILITY SOLELY FOR THE TRUSS COMPONENT DESIGN SHOWN. THE SUITABILITY AND USE OF THIS COMPONENT FOR ANY BUILDING IS THE RESPONSIBILITY OF THE BUILDING DESIGNER PER ANSI/TPI 1 SEC. 2.

DOUGLAS FLEMING LICENSE No. 66648 STATE OF FLORIDA PROFESSIONAL ENGINEER

10/14/2010

TC LL	20.0 PSF	REF	R487-- 3324
TC DL	10.0 PSF	DATE	10/14/10
BC DL	10.0 PSF	DRW	HCUSR487 10287048
BC LL	0.0 PSF	HC-ENG	TCE/DF
TOT.LD.	40.0 PSF	SEQN-	67808
DUR.FAC.	1.25	FROM	AH
SPACING	24.0"	JREF-	1U61487_Z01

THIS DWG PREPARED FROM COMPUTER INPUT (LOADS & DIMENSIONS) SUBMITTED BY TRUSS MFR.

(9-244--Fill in later EDGLEY -- , ** - EJ7G1)

Top chord 2x4 SP #2 Dense
Bot chord 2x6 SP SS
Webs 2x4 SP #3

110 mph wind, 15.00 ft mean hgt, ASCE 7-05, CLOSED bldg, not located within 4.50 ft from roof edge, CAT II, EXP C, wind TC DL=5.0 psf, wind BC DL=5.0 psf. Iw=1.00 GCpi(+/-)=0.18

Wind reactions based on MWFRS pressures.

Special loads
------(Lumber Dur.Fac.=1.25 / Plate Dur.Fac.=1.25)
TC- From 62 plf at 0.00 to 62 plf at 7.00
BC- From 20 plf at 0.00 to 20 plf at 7.00
BC- 293.51 lb Conc. Load at 1.40, 3.40, 5.40

Right end vertical not exposed to wind pressure.

Deflection meets L/240 live and L/180 total load.

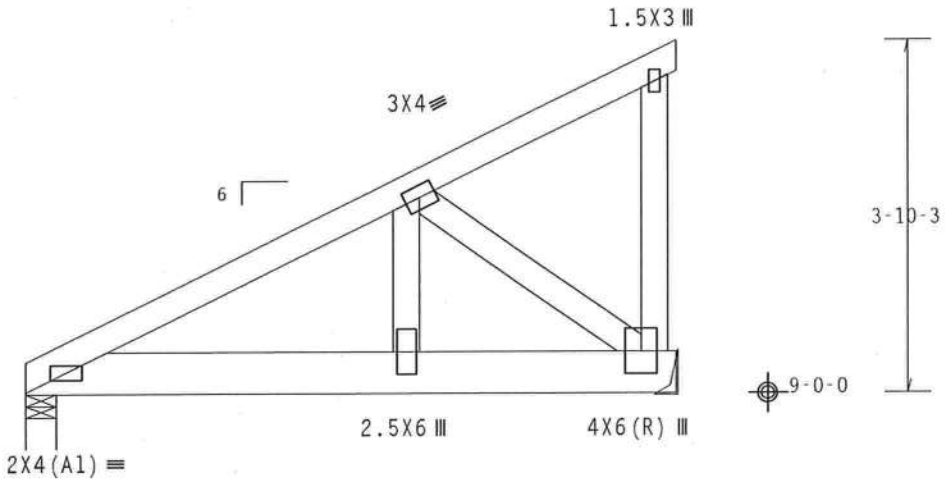

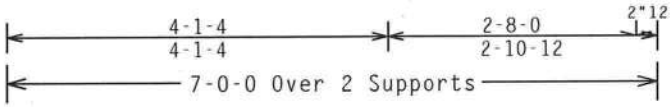

R=749 U=143 W=4"

R=708 U=136 H=Simpson LU26
w/ (4) 10d, 0.148"x1.5" nails in Truss
w/ (6) 16d Common, 0.162"x3.5" nails in Girder
Supporting Member is (1)2x6 SP

Design Crit: FBC2007Res/TPI-2002(STD)
PLT TYP. Wave FT/RT=20%(0%)/0(0) 9.05.03.0319.17 QTY 1 FL/-/4/-/-/R/- Scale =.5"/Ft.

ALPINE
ITW Building Components Group Inc.
Haines City, FL 33844
FL COA #0 278

WARNING TRUSSES REQUIRE EXTREME CARE IN FABRICATION, HANDLING, SHIPPING, INSTALLING AND BRACING. REFER TO BCSI (BUILDING COMPONENT SAFETY INFORMATION), PUBLISHED BY TPI (TRUSS PLATE INSTITUTE, 218 NORTH LEE STREET, SUITE 312, ALEXANDRIA, VA. 22314) AND WTCA (WOOD TRUSS COUNCIL OF AMERICA, 6300 ENTERPRISE LANE, MADISON, WI 53719) FOR SAFETY PRACTICES PRIOR TO PERFORMING THESE FUNCTIONS. UNLESS OTHERWISE INDICATED TOP CHORD SHALL HAVE PROPERLY ATTACHED STRUCTURAL PANELS AND BOTTOM CHORD SHALL HAVE A PROPERLY ATTACHED RIGID CEILING.

IMPORTANTFURNISH A COPY OF THIS DESIGN TO THE INSTALLATION CONTRACTOR. ITW BCG, INC. SHALL NOT BE RESPONSIBLE FOR ANY DEVIATION FROM THIS DESIGN; ANY FAILURE TO BUILD THE TRUSS IN CONFORMANCE WITH TPI1; OR FABRICATING, HANDLING, SHIPPING, INSTALLING & BRACING OF TRUSSES.
DESIGN CONFORMS WITH APPLICABLE PROVISIONS OF NDS (NATIONAL DESIGN SPEC. BY AF&PA) AND TPI. THIS DESIGN CONNECTOR PLATES ARE MADE OF 20/18/16GA (W,H/SS/K) ASTM A653 GRADE 40/60 (W, K/H,SS) GALV. STEEL. APPLY PLATES TO EACH FACE OF TRUSS AND, UNLESS OTHERWISE LOCATED ON THIS DESIGN, POSITION PER DRAWINGS 160[illegible]. ANY INSPECTION OF PLATES FOLLOWED BY (1) SHALL BE PER ANNEX A3 OF TPI1-2002 SEC.3. A SEAL ON THIS DRAWING INDICATES ACCEPTANCE OF PROFESSIONAL ENGINEERING RESPONSIBILITY SOLELY FOR THE TRUSS COMPONENT DESIGN SHOWN. THE SUITABILITY AND USE OF THIS COMPONENT FOR ANY BUILDING IS THE RESPONSIBILITY OF THE BUILDING DESIGNER PER ANSI/TPI 1 SEC. 2.

DOUGLAS FLEMING LICENSE No. 66648 STATE OF FLORIDA PROFESSIONAL ENGINEER
10/14/2010

TC LL	20.0 PSF	REF	R487-- 3325
TC DL	10.0 PSF	DATE	10/14/10
BC DL	10.0 PSF	DRW	HCUSR487 10287007
BC LL	0.0 PSF	HC-ENG	KD/DF
TOT.LD.	40.0 PSF	SEQN-	151536
DUR.FAC.	1.25	FROM	AH
SPACING	24.0"	JREF-	1U61487_Z01

THIS DWG PREPARED FROM COMPUTER INPUT (LOADS & DIMENSIONS) SUBMITTED BY TRUSS MFR.

(9-244--Fill in later EDGLEY -- , ** - EJ7G)

Top chord 2x4 SP #2 Dense
Bot chord 2x6 SP #2
Webs 2x4 SP #3

110 mph wind, 15.00 ft mean hgt, ASCE 7-05, CLOSED bldg, not located within 4.50 ft from roof edge, CAT II, EXP C, wind TC DL=5.0 psf, wind BC DL=5.0 psf. Iw=1.00 GCpi(+/-)=0.18

Wind reactions based on MWFRS pressures.

Deflection meets L/240 live and L/180 total load.

Special loads
------(Lumber Dur.Fac.=1.25 / Plate Dur.Fac.=1.25)
TC- From 62 plf at -1.88 to 62 plf at 7.00
BC- From 4 plf at -1.88 to 4 plf at 0.00
BC- From 20 plf at 0.00 to 20 plf at 7.00
BC- 713.79 lb Conc. Load at 1.06, 3.06, 5.06

Right end vertical not exposed to wind pressure.

Roof overhang supports 2.00 psf soffit load.

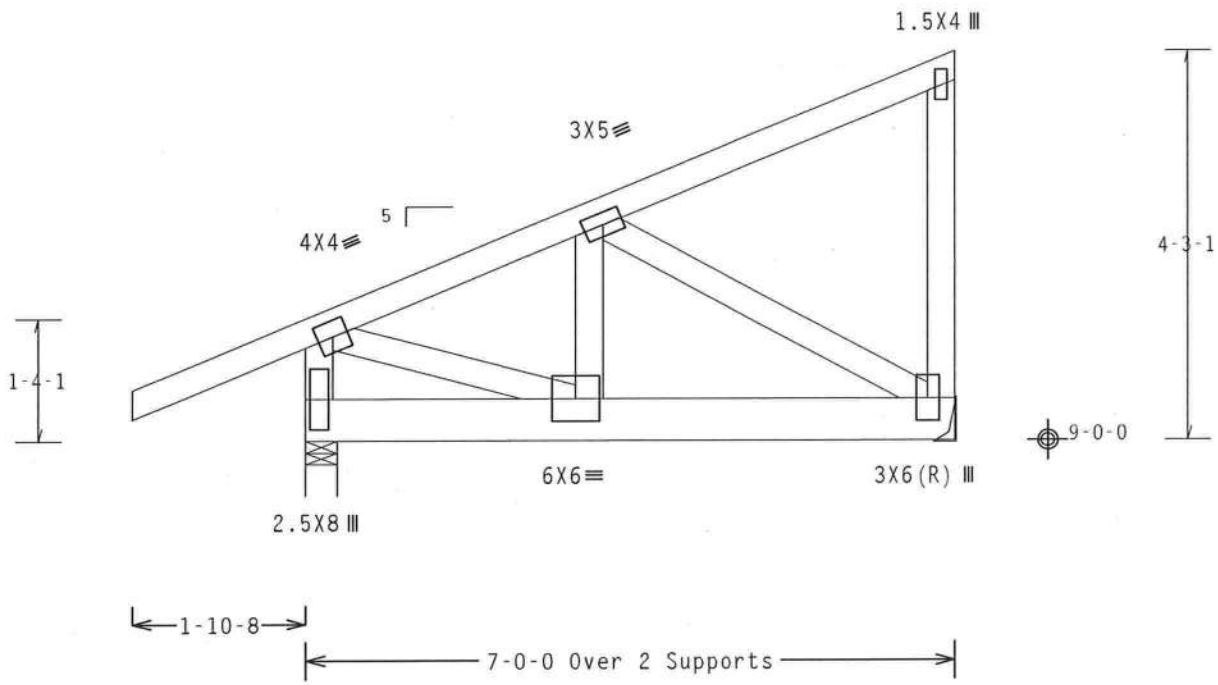

Design Crit: FBC2007Res/TPI-2002(STD)
PLT TYP. Wave FT/RT=20%(0%)/0(0) 9.02.03.0610.16 QTY 1 FL/-/4/-/-/R/- Scale =.5"/Ft.

ALPINE
ITW Building Components Group Inc.
Haines City, FL 33844
FL COA #0 278

WARNING TRUSSES REQUIRE EXTREME CARE IN FABRICATION, HANDLING, SHIPPING, INSTALLING AND BRACING. REFER TO BCSI (BUILDING COMPONENT SAFETY INFORMATION), PUBLISHED BY TPI (TRUSS PLATE INSTITUTE, 218 NORTH LEE STREET, SUITE 312, ALEXANDRIA, VA, 22314) AND WTCA (WOOD TRUSS COUNCIL OF AMERICA, 6300 ENTERPRISE LANE, MADISON, WI 53719) FOR SAFETY PRACTICES PRIOR TO PERFORMING THESE FUNCTIONS. UNLESS OTHERWISE INDICATED TOP CHORD SHALL HAVE PROPERLY ATTACHED STRUCTURAL PANELS AND BOTTOM CHORD SHALL HAVE A PROPERLY ATTACHED RIGID CEILING.

IMPORTANTFURNISH A COPY OF THIS DESIGN TO THE INSTALLATION CONTRACTOR. ITW BCG, INC. SHALL NOT BE RESPONSIBLE FOR ANY DEVIATION FROM THIS DESIGN; ANY FAILURE TO BUILD THE TRUSS IN CONFORMANCE WITH TPI; OR FABRICATING, HANDLING, SHIPPING, INSTALLING & BRACING OF TRUSSES.
DESIGN CONFORMS WITH APPLICABLE PROVISIONS OF NDS (NATIONAL DESIGN SPEC. BY AF&PA) AND TPI. 1 OF 1
CONNECTOR PLATES ARE MADE OF 20/18/16GA (H,H/SS/K) ASTM A653 GRADE 40/60 (H, K/H,SS) GALV. STEEL. APPLY PLATES TO EACH FACE OF TRUSS AND, UNLESS OTHERWISE LOCATED ON THIS DESIGN, POSITION PER DRAWINGS 160A. ANY INSPECTION OF PLATES FOLLOWED BY (1) SHALL BE PER ANNEX A3 OF TPI1-2002 SEC.3. A SEAL ON THIS DRAWING INDICATES ACCEPTANCE OF PROFESSIONAL ENGINEERING RESPONSIBILITY SOLELY FOR THE TRUSS COMPONENT DESIGN SHOWN. THE SUITABILITY AND USE OF THIS COMPONENT FOR ANY BUILDING IS THE RESPONSIBILITY OF THE BUILDING DESIGNER PER ANSI/TPI 1 SEC. 2.

DOUGLAS FLEMING LICENSE No. 66648 STATE OF FLORIDA PROFESSIONAL ENGINEER
10/14/2010

TC LL	20.0 PSF	REF	R487-- 3326
TC DL	10.0 PSF	DATE	10/14/10
BC DL	10.0 PSF	DRW	HCUSR487 10287014
BC LL	0.0 PSF	HC-ENG	TCE/DF
TOT.LD.	40.0 PSF	SEQN-	68171
DUR.FAC.	1.25		
SPACING	24.0"	JREF-	1U61487_Z01

(9-244--Fill in later EDGLEY -- , ** - KGE)

Top chord 2x4 SP #2 Dense
Bot chord 2x4 SP #2 Dense
Webs 2x4 SP #3
:Stack Chord SC1 2x4 SP #2 Dense::Stack Chord SC2 2x4 SP #2 Dense:

Roof overhang supports 2.00 psf soffit load.

See DWGS A11015050109 & GBLLETIN0109 for more requirements.

Stacked top chord must NOT be notched or cut in area (NNL). Dropped top chord braced at 24" o.c. intervals. Attach stacked top chord (SC) to dropped top chord in notchable area using 3x4 tie-plates 24" o.c. Center plate on stacked/dropped chord interface, plate length perpendicular to chord length. Splice top chord in notchable area using 3x6.

THE BUILDING DESIGNER IS RESPONSIBLE FOR THE DESIGN OF THE ROOF AND CEILING DIAPHRAGMS, GABLE END SHEAR WALLS, AND SUPPORTING SHEAR WALLS. SHEAR WALLS MUST PROVIDE CONTINUOUS LATERAL RESTRAINT TO THE GABLE END. ALL CONNECTIONS TO BE DESIGNED BY THE BUILDING DESIGNER.

110 mph wind, 15.00 ft mean hgt, ASCE 7-05, CLOSED bldg, Located anywhere in roof, CAT II, EXP C, wind TC DL=5.0 psf, wind BC DL=5.0 psf. Iw=1.00 GCpi(+/-)=0.18

Wind reactions based on MWFRS pressures.

Truss spaced at 24.0" OC designed to support 1-0-0 top chord outlookers. Cladding load shall not exceed 10.00 PSF. Top chord must not be cut or notched.

Bottom chord checked for 10.00 psf non-concurrent live load.

Deflection meets L/240 live and L/180 total load.

+ MEMBER TO BE LATERALLY BRACED FOR OUT OF PLANE WIND LOADS. BRACING SYSTEM TO BE DESIGNED AND FURNISHED BY OTHERS.

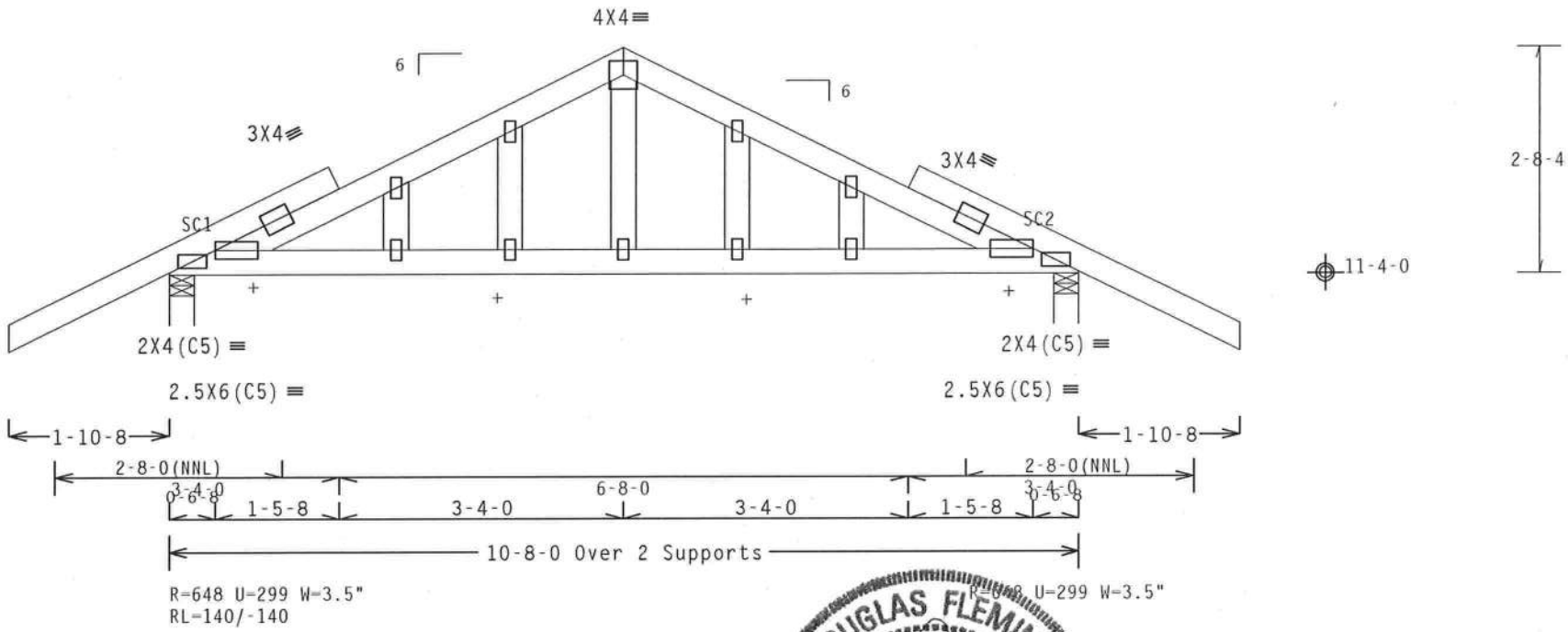

Note: All Plates Are 1.5X3 Except As Shown.

Design Crit: FBC2007Res/TPI-2002(STD)

PLT TYP. Wave FT/RT=20%(0%)/0(0) 09.05.03.0319.17 QTY: FL/-/4/-/-/R/- Scale =.5"/Ft.

ALPINE
ITW Building Components Group Inc.
Haines City, FL 33844
FL COA #0 278

WARNING TRUSSES REQUIRE EXTREME CARE IN FABRICATION, HANDLING, SHIPPING, INSTALLING AND BRACING. REFER TO BCSI (BUILDING COMPONENT SAFETY INFORMATION), PUBLISHED BY TPI (TRUSS PLATE INSTITUTE, 218 NORTH LEE STREET, SUITE 312, ALEXANDRIA, VA. 22314) AND WTCA (WOOD TRUSS COUNCIL OF AMERICA, 6300 ENTERPRISE LANE, MADISON, WI 53719) FOR SAFETY PRACTICES PRIOR TO PERFORMING THESE FUNCTIONS. UNLESS OTHERWISE INDICATED TOP CHORD SHALL HAVE PROPERLY ATTACHED STRUCTURAL PANELS AND BOTTOM CHORD SHALL HAVE A PROPERLY ATTACHED RIGID CEILING.

IMPORTANTFURNISH A COPY OF THIS DESIGN TO THE INSTALLATION CONTRACTOR. ITW BCG, INC. SHALL NOT BE RESPONSIBLE FOR ANY DEVIATION FROM THIS DESIGN; ANY FAILURE TO BUILD THE TRUSS IN CONFORMANCE WITH TPI; OR FABRICATING, HANDLING, SHIPPING, INSTALLING & BRACING OF TRUSSES.
DESIGN CONFORMS WITH APPLICABLE PROVISIONS OF NDS (NATIONAL DESIGN SPEC, BY AF&PA) AND TPI. ITW BCG CONNECTOR PLATES ARE MADE OF 20/18/16GA (W,H/SS/K) ASTM A653 GRADE 40/60 (W, K/H,SS) GALV. STEEL. APPLY PLATES TO EACH FACE OF TRUSS AND, UNLESS OTHERWISE LOCATED ON THIS DESIGN, POSITION PER DRAWINGS 160A-2. ANY INSPECTION OF PLATES FOLLOWED BY (1) SHALL BE PER ANNEX A3 OF TPI1-2002 SEC.3. A SEAL ON THIS DRAWING INDICATES ACCEPTANCE OF PROFESSIONAL ENGINEERING RESPONSIBILITY SOLELY FOR THE TRUSS COMPONENT DESIGN SHOWN. THE SUITABILITY AND USE OF THIS COMPONENT FOR ANY BUILDING IS THE RESPONSIBILITY OF THE BUILDING DESIGNER PER ANSI/TPI 1 SEC. 2.

DOUGLAS FLEMING LICENSE No. 66648 STATE OF FLORIDA PROFESSIONAL ENGINEER
10/14/2010

TC LL	20.0 PSF	REF R487-- 3327
TC DL	10.0 PSF	DATE 10/14/10
BC DL	10.0 PSF	DRW HCUSR487 10287008
BC LL	0.0 PSF	HC-ENG KD/DF
TOT.LD.	40.0 PSF	SEQN- 151407
DUR.FAC.	1.25	FROM AH
SPACING	24.0"	JREF- 1U61487_Z01

(9-244--Fill in later EDGLEY -- , ** - K)

Top chord 2x4 SP #2 Dense
Bot chord 2x4 SP #2 Dense
Webs 2x4 SP #3

Roof overhang supports 2.00 psf soffit load.

Bottom chord checked for 10.00 psf non-concurrent live load.

110 mph wind, 15.00 ft mean hgt, ASCE 7-05, CLOSED bldg, Located anywhere in roof, CAT II, EXP C, wind TC DL=5.0 psf, wind BC DL=5.0 psf. Iw=1.00 GCpi(+/-)=0.18

Wind reactions based on MWFRS pressures.

Deflection meets L/240 live and L/180 total load.

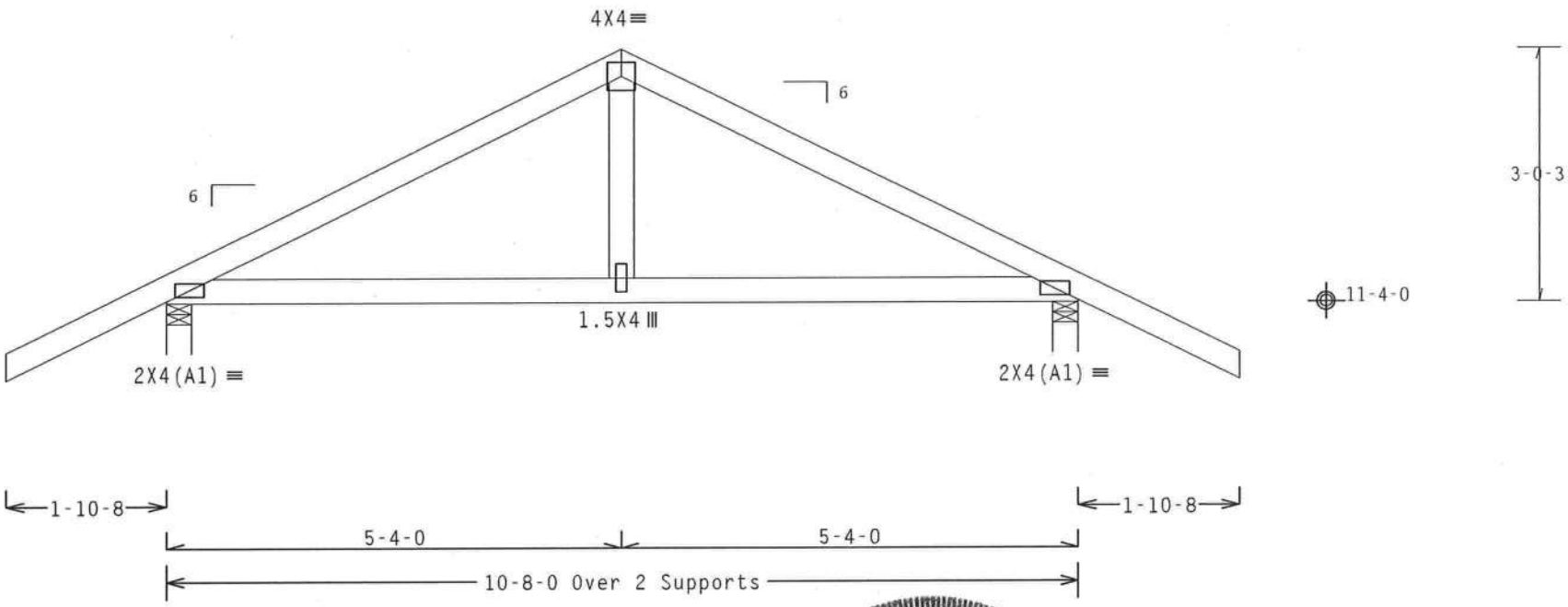

Design Crit: FBC2007Res/TPI-2002(STD)
FT/RT=20%(0%)/0(0) 09.02.03.0610.16 QTY: 1

PLT TYP. Wave

FL/-/4/-/-/R/-

Scale =.5"/Ft.

ALPINE
ITW Building Components Group Inc.
Haines City, FL 33844
FL COA #0 278

WARNING TRUSSES REQUIRE EXTREME CARE IN FABRICATION, HANDLING, SHIPPING, INSTALLING AND BRACING. REFER TO BCSI (BUILDING COMPONENT SAFETY INFORMATION), PUBLISHED BY TPI (TRUSS PLATE INSTITUTE, 218 NORTH LEE STREET, SUITE 312, ALEXANDRIA, VA. 22314) AND WTCA (WOOD TRUSS COUNCIL OF AMERICA, 6300 ENTERPRISE LANE, MADISON, WI 53719) FOR SAFETY PRACTICES PRIOR TO PERFORMING THESE FUNCTIONS. UNLESS OTHERWISE INDICATED TOP CHORD SHALL HAVE PROPERLY ATTACHED STRUCTURAL PANELS AND BOTTOM CHORD SHALL HAVE A PROPERLY ATTACHED RIGID CEILING.

IMPORTANTFURNISH A COPY OF THIS DESIGN TO THE INSTALLATION CONTRACTOR. ITW BCG, INC. SHALL NOT BE RESPONSIBLE FOR ANY DEVIATION FROM THIS DESIGN; ANY FAILURE TO BUILD THE TRUSS IN CONFORMANCE WITH TPI; OR FABRICATING, HANDLING, SHIPPING, INSTALLING & BRACING OF TRUSSES.
DESIGN CONFORMS WITH APPLICABLE PROVISIONS OF NDS (NATIONAL DESIGN SPEC. BY AF&PA) AND TPI. ITW BCG CONNECTOR PLATES ARE MADE OF 20/18/16GA (W,H/SS/K) ASTM A653 GRADE 40/60 (W, K/H,SS) GALV. STEEL. APPLY PLATES TO EACH FACE OF TRUSS AND, UNLESS OTHERWISE LOCATED ON THIS DESIGN, POSITION PER DRAWINGS 160A-Z. ANY INSPECTION OF PLATES FOLLOWED BY (1) SHALL BE PER ANNEX A3 OF TPI1-2002 SEC.3. A SEAL ON THIS DRAWING INDICATES ACCEPTANCE OF PROFESSIONAL ENGINEERING RESPONSIBILITY SOLELY FOR THE TRUSS COMPONENT DESIGN SHOWN. THE SUITABILITY AND USE OF THIS COMPONENT FOR ANY BUILDING IS THE RESPONSIBILITY OF THE BUILDING DESIGNER PER ANSI/TPI 1 SEC. 2.

DOUGLAS FLEMING LICENSE No. 66648 STATE OF FLORIDA PROFESSIONAL ENGINEER
10/14/2010

TC LL	20.0 PSF	REF	R487-- 3328
TC DL	10.0 PSF	DATE	10/14/10
BC DL	10.0 PSF	DRW	HCUSR487 10287024
BC LL	0.0 PSF	HC-ENG	TCE/DF *
TOT.LD.	40.0 PSF	SEQN-	68325
DUR.FAC.	1.25	FROM	AH
SPACING	24.0"	JREF-	1U61487_Z01

THIS DWG PREPARED FROM COMPUTER INPUT (LOADS & DIMENSIONS) SUBMITTED BY TRUSS MFR.

(9-244--Fill in later EDGLEY -- , ** - K-1)

Top chord 2x4 SP #2 Dense
Bot chord 2x4 SP #2 Dense
Webs 2x4 SP #3

Roof overhang supports 2.00 psf soffit load.

Bottom chord checked for 10.00 psf non-concurrent live load.

110 mph wind, 15.00 ft mean hgt, ASCE 7-05, CLOSED bldg, not located within 4.50 ft from roof edge, CAT II, EXP C, wind TC DL=5.0 psf, wind BC DL=5.0 psf. Iw=1.00 GCpi(+/-)=0.18

Wind reactions based on MWFRS pressures.

Deflection meets L/240 live and L/180 total load.

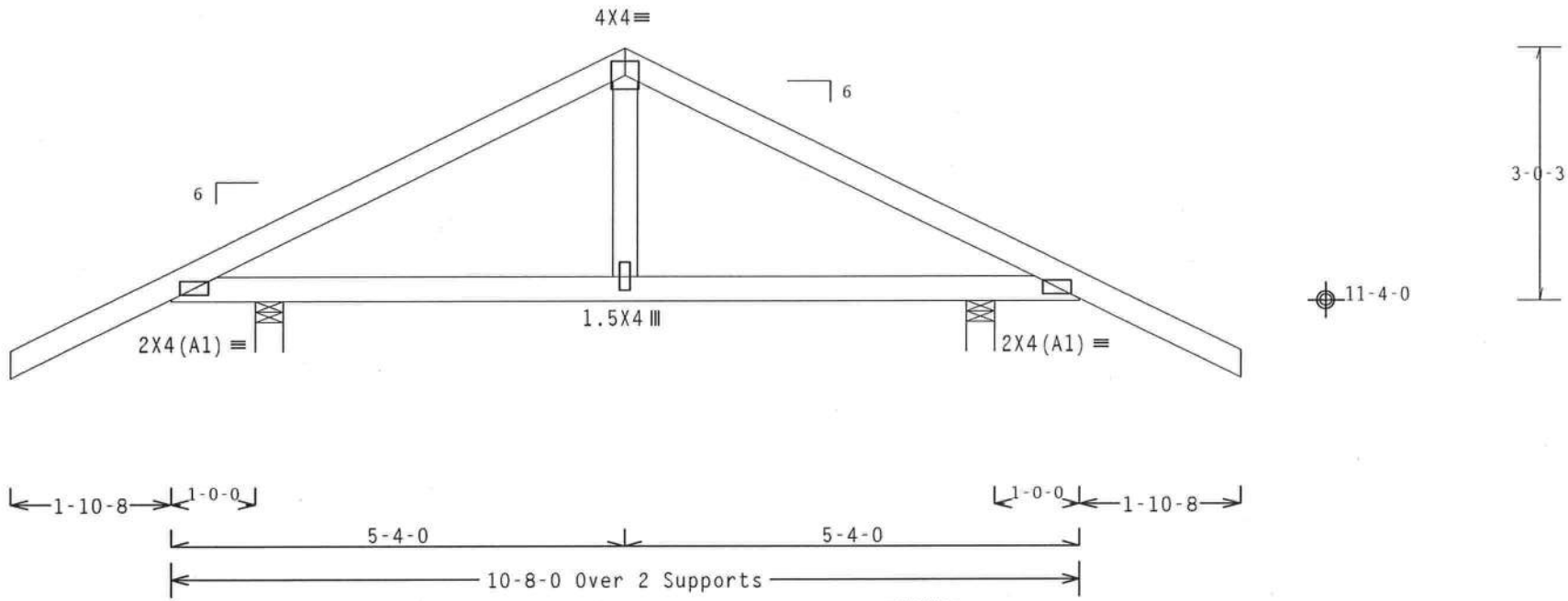

Design Crit: FBC2007Res/TPI-2002(STD)

PLT TYP. Wave | FT/RT=20%(0%)/0(0) | 9.02.03.0610.16 | QTY 2 | FL/-/4/-/-/R/- | Scale =.5"/Ft.

ALPINE
ITW Building Components Group Inc.
Haines City, FL 33844
FL COA #0 278

WARNING TRUSSES REQUIRE EXTREME CARE IN FABRICATION, HANDLING, SHIPPING, INSTALLING AND BRACING. REFER TO BCSI (BUILDING COMPONENT SAFETY INFORMATION), PUBLISHED BY TPI (TRUSS PLATE INSTITUTE, 218 NORTH LEE STREET, SUITE 312, ALEXANDRIA, VA, 22314) AND WTCA (WOOD TRUSS COUNCIL OF AMERICA, 6300 ENTERPRISE LANE, MADISON, WI 53719) FOR SAFETY PRACTICES PRIOR TO PERFORMING THESE FUNCTIONS. UNLESS OTHERWISE INDICATED TOP CHORD SHALL HAVE PROPERLY ATTACHED STRUCTURAL PANELS AND BOTTOM CHORD SHALL HAVE A PROPERLY ATTACHED RIGID CEILING.

IMPORTANTFURNISH A COPY OF THIS DESIGN TO THE INSTALLATION CONTRACTOR. ITW BCG, INC. SHALL NOT BE RESPONSIBLE FOR ANY DEVIATION FROM THIS DESIGN; ANY FAILURE TO BUILD THE TRUSS IN CONFORMANCE WITH TPI; OR FABRICATING, HANDLING, SHIPPING, INSTALLING & BRACING OF TRUSSES.
DESIGN CONFORMS WITH APPLICABLE PROVISIONS OF NDS (NATIONAL DESIGN SPEC, BY AF&PA) AND TPI. ITW BCG, INC. CONNECTOR PLATES ARE MADE OF 20/18/16GA (W,H/SS/K) ASTM A653 GRADE 40/60 (W, K/H,SS) GALV. STEEL. APPLY PLATES TO EACH FACE OF TRUSS AND, UNLESS OTHERWISE LOCATED ON THIS DESIGN, POSITION PER DRAWINGS 160A. ANY INSPECTION OF PLATES FOLLOWED BY (1) SHALL BE PER ANNEX A3 OF TPI1-2002 SEC.3. A SEAL ON THIS DRAWING INDICATES ACCEPTANCE OF PROFESSIONAL ENGINEERING RESPONSIBILITY SOLELY FOR THE TRUSS COMPONENT DESIGN SHOWN. THE SUITABILITY AND USE OF THIS COMPONENT FOR ANY BUILDING IS THE RESPONSIBILITY OF THE BUILDING DESIGNER PER ANSI/TPI 1 SEC. 2.

DOUGLAS FLEMING LICENSE No. 66648 STATE OF FLORIDA PROFESSIONAL ENGINEER
10/14/2010

TC LL	20.0 PSF	REF R487-- 3329
TC DL	10.0 PSF	DATE 10/14/10
BC DL	10.0 PSF	DRW HCUSR487 10287023
BC LL	0.0 PSF	HC-ENG TCE/DF
TOT.LD.	40.0 PSF	SEQN- 68328
DUR.FAC.	1.25	FROM AH
SPACING	24.0"	JREF- 1U61487_Z01

THIS DWG PREPARED FROM COMPUTER INPUT (LOADS & DIMENSIONS) SUBMITTED BY TRUSS MFR.

(9-244--Fill in later EDGLEY -- , ** - KG)

Top chord 2x4 SP #2 Dense
Bot chord 2x6 SP SS
Webs 2x4 SP #3
:Lt Slider 2x4 SP #3: BLOCK LENGTH = 1.500'
:Rt Slider 2x4 SP #3: BLOCK LENGTH = 1.500'

Roof overhang supports 2.00 psf soffit load.

Deflection meets L/240 live and L/180 total load.

110 mph wind, 15.00 ft mean hgt, ASCE 7-05, CLOSED bldg, Located anywhere in roof, CAT II, EXP C, wind TC DL=5.0 psf, wind BC DL=5.0 psf. Iw=1.00 GCpi(+/-)=0.18

Wind reactions based on MWFRS pressures.

Girder supports 28-0-0 span to BC one face and 2-0-0 span to TC/BC split opposite face.

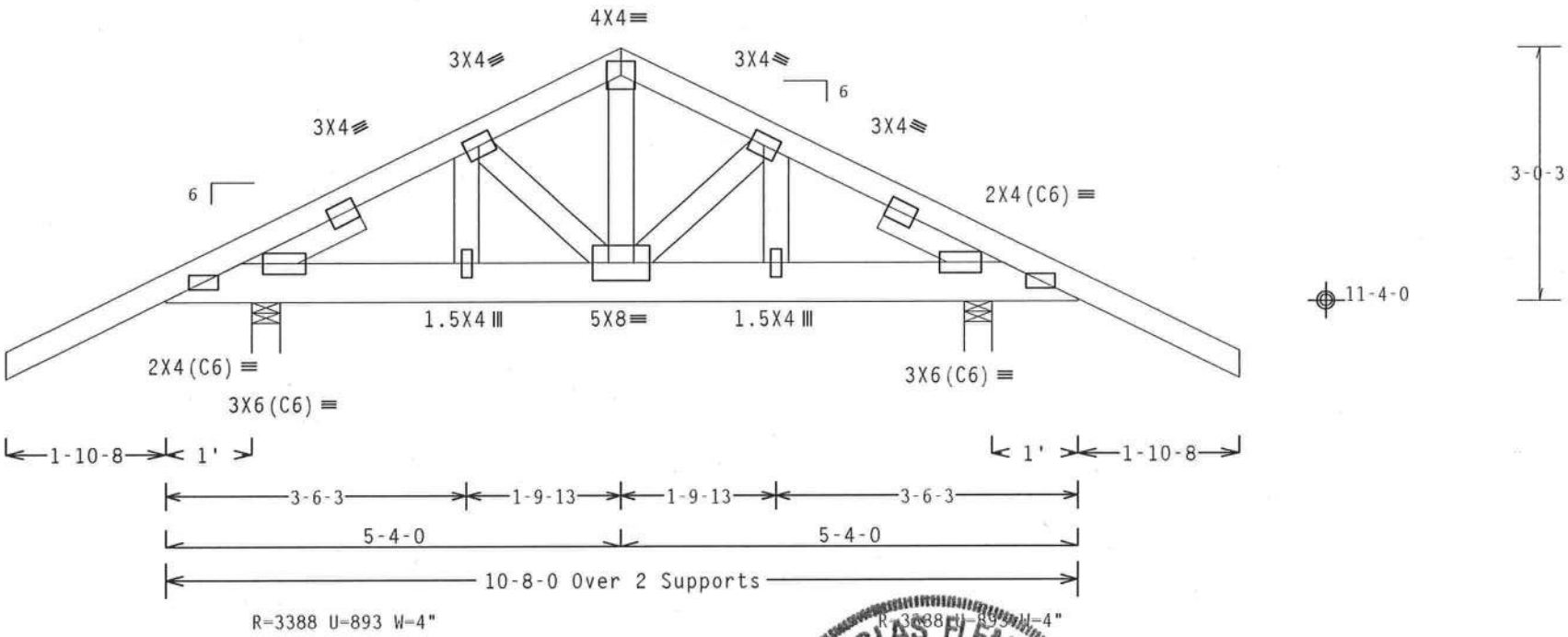

Design Crit: FBC2007Res/TPI-2002(STD)

PLT TYP. Wave FT/RT=20%(0%)/0(0) 9.05.03.0319.17 QTY: 1 FL/-/4/-/-/R/- Scale =.5"/Ft.

ALPINE
ITW Building Components Group Inc.
Haines City, FL 33844
FL COA #0 278

WARNING TRUSSES REQUIRE EXTREME CARE IN FABRICATION, HANDLING, SHIPPING, INSTALLING AND BRACING. REFER TO BCSI (BUILDING COMPONENT SAFETY INFORMATION), PUBLISHED BY TPI (TRUSS PLATE INSTITUTE, 218 NORTH LEE STREET, SUITE 312, ALEXANDRIA, VA. 22314) AND WTCA (WOOD TRUSS COUNCIL OF AMERICA, 6300 ENTERPRISE LANE, MADISON, WI 53719) FOR SAFETY PRACTICES PRIOR TO PERFORMING THESE FUNCTIONS. UNLESS OTHERWISE INDICATED TOP CHORD SHALL HAVE PROPERLY ATTACHED STRUCTURAL PANELS AND BOTTOM CHORD SHALL HAVE A PROPERLY ATTACHED RIGID CEILING.

IMPORTANTFURNISH A COPY OF THIS DESIGN TO THE INSTALLATION CONTRACTOR. ITW BCG, INC. SHALL NOT BE RESPONSIBLE FOR ANY DEVIATION FROM THIS DESIGN; ANY FAILURE TO BUILD THE TRUSS IN CONFORMANCE WITH TPI1; OR FABRICATING, HANDLING, SHIPPING, INSTALLING & BRACING OF TRUSSES.
DESIGN CONFORMS WITH APPLICABLE PROVISIONS OF NDS (NATIONAL DESIGN SPEC. BY AF&PA) AND TPI. ITW BCG CONNECTOR PLATES ARE MADE OF 20/18/16GA (W,H/SS/K) ASTM A653 GRADE 40/60 (W, K/H,SS) GALV. STEEL. APPLY PLATES TO EACH FACE OF TRUSS AND, UNLESS OTHERWISE LOCATED ON THIS DESIGN, POSITION PER DRAWINGS 160A-2. ANY INSPECTION OF PLATES FOLLOWED BY (1) SHALL BE PER ANNEX A3 OF TPI1-2002 SEC.3. A SEAL ON THIS DRAWING INDICATES ACCEPTANCE OF PROFESSIONAL ENGINEERING RESPONSIBILITY SOLELY FOR THE TRUSS COMPONENT DESIGN SHOWN. THE SUITABILITY AND USE OF THIS COMPONENT FOR ANY BUILDING IS THE RESPONSIBILITY OF THE BUILDING DESIGNER PER ANSI/TPI 1 SEC. 2.

DOUGLAS FLEMING LICENSE No. 66648 STATE OF FLORIDA PROFESSIONAL ENGINEER
10/14/2010

TC LL	20.0 PSF	REF R487-- 3330
TC DL	10.0 PSF	DATE 10/14/10
BC DL	10.0 PSF	DRW HCUSR487 10287012
BC LL	0.0 PSF	HC-ENG KD/DF
TOT.LD.	40.0 PSF	SEQN- 151011
DUR.FAC.	1.25	FROM AH
SPACING	24.0"	JREF- 1U61487_Z01

THIS DWG PREPARED FROM COMPUTER INPUT (LOADS & DIMENSIONS) SUBMITTED BY TRUSS MFR.

(9-244--Fill in later EDGLEY -- , ** - H1.4L)

Top chord 2x4 SP #2 Dense
Bot chord 2x4 SP #2 Dense
Webs 2x4 SP #3

Roof overhang supports 2.00 psf soffit load.

In lieu of structural panels use purlins to brace all flat TC @ 24" OC.

Deflection meets L/240 live and L/180 total load.

110 mph wind, 15.00 ft mean hgt, ASCE 7-05, CLOSED bldg, Located anywhere in roof, CAT II, EXP C, wind TC DL=5.0 psf, wind BC DL=5.0 psf. Iw=1.00 GCpi(+/-)=0.18

Wind reactions based on MWFRS pressures.

#1 hip supports 1-4-8 jacks with no webs.

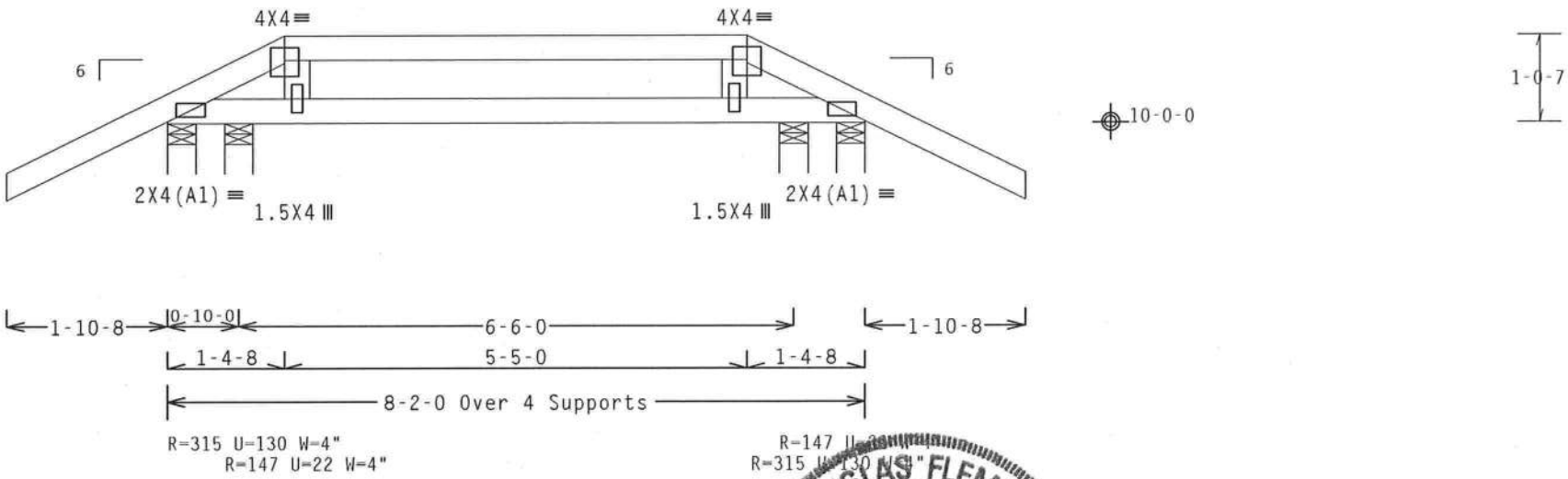

Design Crit: FBC2007Res/TPI-2002(STD)

PLT TYP. Wave | FT/RT=20%(0%)/0(0) | 9.03.03.0610.16 | QTY 1 | FL/-/4/-/-/R/- | Scale =.5"/Ft.

ALPINE
ITW Building Components Group Inc.
Haines City, FL 33844
FL COA #0 278

WARNING TRUSSES REQUIRE EXTREME CARE IN FABRICATION, HANDLING, SHIPPING, INSTALLING AND BRACING. REFER TO BCSI (BUILDING COMPONENT SAFETY INFORMATION), PUBLISHED BY TPI (TRUSS PLATE INSTITUTE, 218 NORTH LEE STREET, SUITE 312, ALEXANDRIA, VA, 22314) AND WTCA (WOOD TRUSS COUNCIL OF AMERICA, 6300 ENTERPRISE LANE, MADISON, WI 53719) FOR SAFETY PRACTICES PRIOR TO PERFORMING THESE FUNCTIONS. UNLESS OTHERWISE INDICATED TOP CHORD SHALL HAVE PROPERLY ATTACHED STRUCTURAL PANELS AND BOTTOM CHORD SHALL HAVE A PROPERLY ATTACHED RIGID CEILING.

IMPORTANTFURNISH A COPY OF THIS DESIGN TO THE INSTALLATION CONTRACTOR. ITW BCG, INC. SHALL NOT BE RESPONSIBLE FOR ANY DEVIATION FROM THIS DESIGN; ANY FAILURE TO BUILD THE TRUSS IN CONFORMANCE WITH TPI; OR FABRICATING, HANDLING, SHIPPING, INSTALLING & BRACING OF TRUSSES. DESIGN CONFORMS WITH APPLICABLE PROVISIONS OF NDS (NATIONAL DESIGN SPEC, BY AF&PA) AND TPI. [illegible] CONNECTOR PLATES ARE MADE OF 20/18/16GA (W,H/SS/K) ASTM A653 GRADE 40/60 (W, K/H,SS) GALV. STEEL. A[illegible] PLATES TO EACH FACE OF TRUSS AND, UNLESS OTHERWISE LOCATED ON THIS DESIGN, POSITION PER DRAWINGS 16[illegible]. ANY INSPECTION OF PLATES FOLLOWED BY (1) SHALL BE PER ANNEX A3 OF TPI1-2002 SEC.3. A SEAL ON THIS DRAWING INDICATES ACCEPTANCE OF PROFESSIONAL ENGINEERING RESPONSIBILITY SOLELY FOR THE TRUSS COMPONENT DESIGN SHOWN. THE SUITABILITY AND USE OF THIS COMPONENT FOR ANY BUILDING IS THE RESPONSIBILITY OF THE BUILDING DESIGNER PER ANSI/TPI 1 SEC. 2.

DOUGLAS FLEMING LICENSE No. 66648 STATE OF FLORIDA PROFESSIONAL ENGINEER
10/14/2010

TC LL	20.0 PSF	REF	R487-- 3331
TC DL	10.0 PSF	DATE	10/14/10
BC DL	10.0 PSF	DRW	HCUSR487 10287060
BC LL	0.0 PSF	HC-ENG	TCE/DF
TOT.LD.	40.0 PSF	SEQN-	68342
DUR.FAC.	1.25	FROM	AH
SPACING	24.0"	JREF-	1U61487_Z01