DATE 11/22/2005

Columbia County Building Permit

This Permit Expires One Year From the Date of Issue

PERMIT
000023883

APPLICANT MELANIE RODER PHONE 386.752.2281

ADDRESS 387 SW KEMP CT. LAKE CITY FL 32024

OWNER SPARKS CONTRACTORS,INC. PHONE 386.623.0575

ADDRESS 157 SW EDNA COURT LAKE CITY FL 32024

CONTRACTOR JOSH SPARKS PHONE 386.752.2281

LOCATION OF PROPERTY SR-247-S TO EMERALD FOREST S.D,TL TO EDNA CT.TL, AND IT'S THE 2ND LOT ON R.

TYPE DEVELOPMENT SFD/UTILITY ESTIMATED COST OF CONSTRUCTION 84400.00

HEATED FLOOR AREA 1688.00 TOTAL AREA 2484.00 HEIGHT 17.40 STORIES 1

FOUNDATION CONC WALLS FRAMED ROOF PITCH 5'12 FLOOR CONC

LAND USE & ZONING RSF-2 MAX. HEIGHT 35

Minimum Set Back Requirments: STREET-FRONT 25.00 REAR 15.00 SIDE 10.00

NO. EX.D.U. 0 FLOOD ZONE X DEVELOPMENT PERMIT NO.

PARCEL ID 11-4S-16-02919-250 SUBDIVISION EMERALD FOREST

LOT 50 BLOCK PHASE 3 UNIT TOTAL ACRES .50

000000891		CBC1252260	Melanie Roder	
Culvert Permit No.	Culvert Waiver	Contractor's License Number	Applicant/Owner/Contractor	
18"X32'MITERED	05-1098-N	BLK	JTH	N
Driveway Connection	Septic Tank Number	LU & Zoning checked by	Approved for Issuance	New Resident

COMMENTS: 1 FOOT ABOVE ROAD

Check # or Cash 2763

FOR BUILDING & ZONING DEPARTMENT ONLY

(footer/Slab)

Temporary Power _____ date/app. by Foundation _____ date/app. by Monolithic _____ date/app. by

Under slab rough-in plumbing _____ date/app. by Slab _____ date/app. by Sheathing/Nailing _____ date/app. by

Framing _____ date/app. by Rough-in plumbing above slab and below wood floor _____ date/app. by

Electrical rough-in _____ date/app. by Heat & Air Duct _____ date/app. by Peri. beam (Lintel) _____ date/app. by

Permanent power _____ date/app. by C.O. Final _____ date/app. by Culvert _____ date/app. by

M/H tie downs, blocking, electricity and plumbing _____ date/app. by Pool _____ date/app. by

Reconnection _____ date/app. by Pump pole _____ date/app. by Utility Pole _____ date/app. by

M/H Pole _____ date/app. by Travel Trailer _____ date/app. by Re-roof _____ date/app. by

BUILDING PERMIT FEE $ 425.00 CERTIFICATION FEE $ 12.42 SURCHARGE FEE $ 12.42

MISC. FEES $ .00 ZONING CERT. FEE $ 50.00 FIRE FEE $ .00 WASTE FEE $

FLOOD DEVELOPMENT FEE $ FLOOD ZONE FEE $ 25.00 CULVERT FEE $ 25.00 **TOTAL FEE** 549.84

INSPECTORS OFFICE CH CLERKS OFFICE CH

NOTICE: IN ADDITION TO THE REQUIREMENTS OF THIS PERMIT, THERE MAY BE ADDITIONAL RESTRICTIONS APPLICABLE TO THIS PROPERTY THAT MAY BE FOUND IN THE PUBLIC RECORDS OF THIS COUNTY. AND THERE MAY BE ADDITIONAL PERMITS REQUIRED FROM OTHER GOVERNMENTAL ENTITIES SUCH AS WATER MANAGEMENT DISTRICTS, STATE AGENCIES, OR FEDERAL AGENCIES.

"WARNING TO OWNER: YOUR FAILURE TO RECORD A NOTICE OF COMMENCEMENT MAY RESULT IN YOUR PAYING TWICE FOR IMPROVEMENTS TO YOUR PROPERTY. IF YOU INTEND TO OBTAIN FINANCING, CONSULT WITH YOUR LENDER OR AN ATTORNEY BEFORE RECORDING YOUR NOTICE OF COMMENCEMENT."

This Permit Must Be Prominently Posted on Premises During Construction

PLEASE NOTIFY THE COLUMBIA COUNTY BUILDING DEPARTMENT AT LEAST 24 HOURS IN ADVANCE OF EACH INSPECTION, IN ORDER THAT IT MAY BE MADE WITHOUT DELAY OR INCONVIENCE, PHONE 758-1008. THIS PERMIT IS NOT VALID UNLESS THE WORK AUTHORIZED BY IT IS COMMENCED WITHIN 6 MONTHS AFTER ISSUANCE.

The Issuance of this Permit Does Not Waive Compliance by Permittee with Deed Restrictions.

Permit # 23883

THIS INSTRUMENT PREPARED BY
& RETURN TO:
Columbia County Bank
Linda Evans
173 NW Hillsboro Street
Lake City, FL 32055
REC: $

Inst:2005029267 Date:11/28/2005 Time:11:03
DC,P.DeWitt Cason,Columbia County B:1066 P:186

NOTICE OF COMMENCEMENT

THE UNDERSIGNED hereby gives notice that improvement will be made to certain real property, and in accordance with Chapter 713, Florida Statutes, the following information is provided in this Notice of Commencement:

1. Description of Property: Lot # 50 Emerald Forest Subdivision

2. General Description of Improvements: 2,484 square foot single family residence

3. Owner Information: Sparks Contractors, Inc.
162 SW Country Court
Lake City, FL 32024

Owner's Interest in Property: Fee Simple

4. Contractor: Owner

5. Lender: Columbia County Bank
173 NW Hillsboro Street
Lake City, FL 32055

6. Additional persons within the State of Florida designated by Owner upon whom notices or other documents may be served as provided by Section 713.13(1)(a)7., Florida Statutes:

7. Expiration date of Notice of Commencement is one (1) year from the date of recording.

Sparks Contractors, Inc.

Jacob Sparks, President

STATE OF FLORIDA}
COUNTY OF Columbia}

The foregoing instrument was acknowledged before me this 22 day of November, 2005 by Jacob Sparks as President of Sparks Contractors, Inc.

LINDA EVANS
MY COMMISSION # DD 129038
EXPIRES: June 25, 2006
Bonded Thru Notary Public Underwriters

NOTARY PUBLIC
Linda Evans
Name:
State of Florida at Large (SEAL)
Personally Known:
Produced Identification: Drivers Lic.
Type:
My Commission Expires:

(NOC)

Columbia County Building Department
Culvert Permit

Culvert Permit No.
000000891

DATE 11/22/2005 PARCEL ID # 11-4S-16-02919-250

APPLICANT MELANIE RODER PHONE 752.2281

ADDRESS 387 SW KEMP CT LAKE CITY FL 32024

OWNER SPARKS CONTRACTORS, INC. PHONE 386.623.0575

ADDRESS 157 SW EDNA CT LAKE CITY FL 32024

CONTRACTOR JOSH SPARKS PHONE 386.623.0578

LOCATION OF PROPERTY SR-247-S TO EMERALD FOREST,TL TO EDNA CT,TL AND IT'S THE 2ND LOT ON THE R.

SUBDIVISION/LOT/BLOCK/PHASE/UNIT EMERALD FOREST 50 III

SIGNATURE Melanie Roder

INSTALLATION REQUIREMENTS

[X] Culvert size will be 18 inches in diameter with a total lenght of 32 feet, leaving 24 feet of driving surface. Both ends will be mitered 4 foot with a 4 : 1 slope and poured with a 4 inch thick reinforced concrete slab.

INSTALLATION NOTE: Turnouts will be required as follows:
a) a majority of the current and existing driveway turnouts are paved, or;
b) the driveway to be served will be paved or formed with concrete.
Turnouts shall be concrete or paved a minimum of 12 feet wide or the width of the concrete or paved driveway, whichever is greater. The width shall conform to the current and existing paved or concreted turnouts.

[ ] Culvert installation shall conform to the approved site plan standards.

[ ] Department of Transportation Permit installation approved standards.

[ ] Other

ALL PROPER SAFETY REQUIREMENTS SHOULD BE FOLLOWED DURING THE INSTALATION OF THE CULVERT.

135 NE Hernando Ave., Suite B-21
Lake City, FL 32055
Phone: 386-758-1008 Fax: 386-758-2160

Amount Paid 25.00

CERTIFICATE OF

OCCUPANCY

COLUMBIA COUNTY, FLORIDA

Department of Building and Zoning Inspection

This Certificate of Occupancy is issued to the below named permit holder for the building and premises at the below named location, and certifies that the work has been completed in accordance with the Columbia County Building Code.

Parcel Number 11-4S-16-02919-250 **Building permit No.** 000023883

Use Classification SFD/UTILITY **Fire:** 35.52

Permit Holder JOSH SPARKS **Waste:** 73.50

Owner of Building SPARKS CONTRACTORS,INC. **Total:** 109.02

Location: 157 SW EDNA CT (EMERALD FOREST, LOT 50)

Date: 04/06/2006

Harry Dicks

Building Inspector

POST IN A CONSPICUOUS PLACE
(Business Places Only)

Lot 50 Emerald Forest

Columbia County Building Permit Application

#23883 Revised 9-23-04

For Office Use Only Application # 0511.52 Date Received 11-15-05 By [illegible] Permit # 8911

Application Approved by - Zoning Official BLK Date 11.11.05 Plans Examiner OK JTH Date 11-17-05

Flood Zone X Development Permit N/A Zoning RSF-2 Land Use Plan Map Category RSF-2

Comments Per PLAT

- Talked w/ Linda. 11.22.05 - 2763 54.84

Applicants Name Linda Roder Phone 752-2281

Address 387 S.W. Kemp Ct. Lake City FL 32024

Owners Name Sparks Contractors Inc. Phone 623-0575

911 Address 157 S.W. Edna Ct. Lake City FL 32024

Contractors Name Josh Sparks Phone 623-0575

Address P.O. Bo 1479 Lake City FL 32056

Fee Simple Owner Name & Address N/A

Bonding Co. Name & Address N/A

Architect/Engineer Name & Address David Disosway / Mark Disosway

Mortgage Lenders Name & Address CCB

Circle the correct power company - FL Power & Light - Clay Elec. - Suwannee Valley Elec. - Progressive Energy

Property ID Number 11-4S-16-02919-250 Estimated Cost of Construction 75,000

Subdivision Name Emerald Forest Sec Lot 50 Block ___ Unit ___ Phase 3

Driving Directions 247 S. Lon Emerald Forest, Lon SW Edna Court, 2nd Lot on R

Type of Construction SFD Number of Existing Dwellings on Property 0

Total Acreage ___ Lot Size .5 Do you need a Culvert Permit or Culvert Waiver or Have an Existing Drive

Actual Distance of Structure from Property Lines - Front 40 Side 21.55 Side 21.55 Rear 186.09

Total Building Height 17'-4" Number of Stories 1 Heated Floor Area 1688 Roof Pitch 12-5/12-6

Porch 280 Garage 516 TOTAL 2484

Application is hereby made to obtain a permit to do work and installations as indicated. I certify that no work or installation has commenced prior to the issuance of a permit and that all work be performed to meet the standards of all laws regulating construction in this jurisdiction.

OWNERS AFFIDAVIT: I hereby certify that all the foregoing information is accurate and all work will be done in compliance with all applicable laws and regulating construction and zoning.

WARNING TO OWNER: YOUR FAILURE TO RECORD A NOTICE OF COMMENCMENT MAY RESULT IN YOU PAYING TWICE FOR IMPROVEMENTS TO YOUR PROPERTY. IF YOU INTEND TO OBTAIN FINANCING, CONSULT WITH YOUR LENDER OR ATTORNEY BEFORE RECORDING YOUR NOTICE OF COMMENCEMENT.

Owner Builder or Agent (Including Contractor)

Contractor Signature

Contractors License Number CBC 1252260

Competency Card Number

NOTARY STAMP/SEAL

Linda R. Roder
Commission #DD303[illegible]
Expires: Mar 24, 20[illegible]
Bonded Thru
Atlantic Bonding Co., Inc.

STATE OF FLORIDA
COUNTY OF COLUMBIA

Sworn to (or affirmed) and subscribed before me this 27 day of September 2005.

Personally known ✓ or Produced Identification ___

Notary Signature

PLAT BOOK 6, PAGE 85

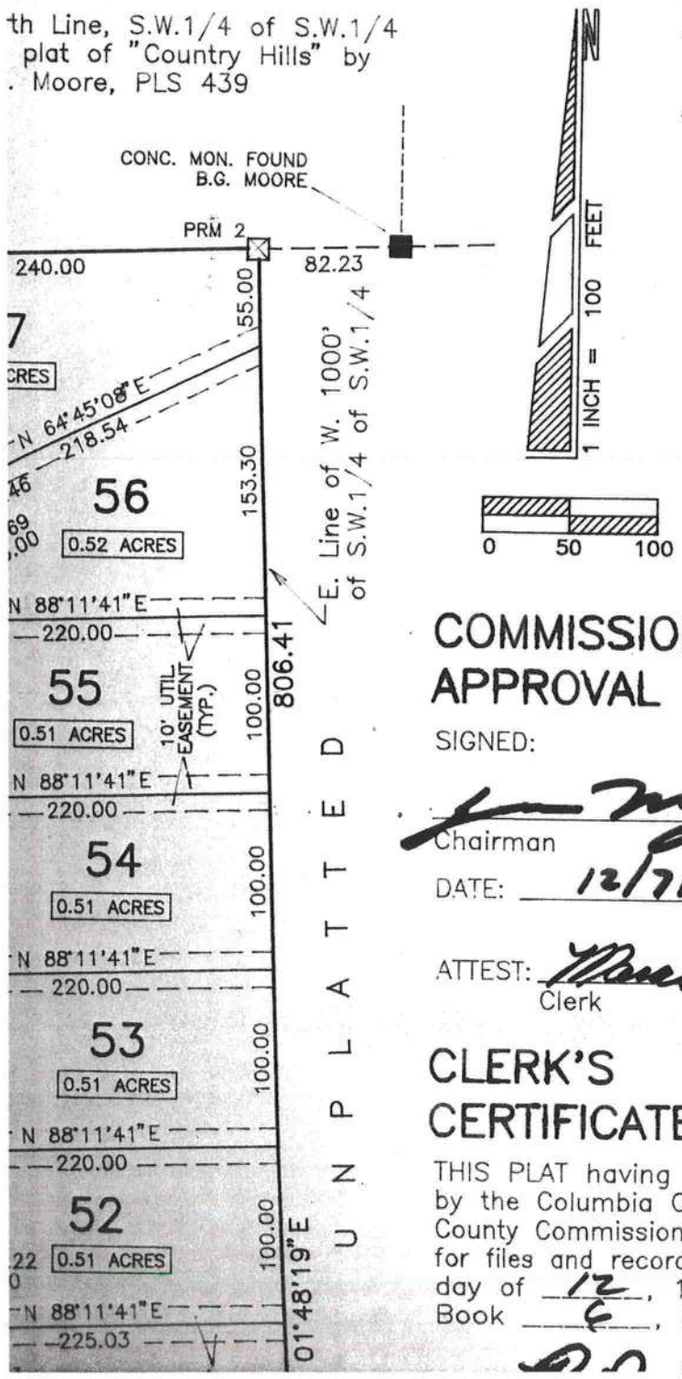

EMERALD FOREST PHASE 3

A SUBDIVISION IN SECTION 11 TOWNSHIP 4 SOUTH, RANGE 16 EAST COLUMBIA COUNTY, FLORIDA

COMMISSION APPROVAL

SIGNED:

Chairman

DATE: 12/7/92

ATTEST: Mark Rice
Clerk

CLERK'S CERTIFICATE

THIS PLAT having been approved by the Columbia County board of County Commissioners is accepted for files and recorded this 9 day of 12, 1992, in Plat Book 6, Page 85.

DESCRIPTION

BEGIN at the Northwest corner of "Emerald Forest Phase 2", a subdivision as recorded in Plat Book 6, Page 77 of the Public Records of Columbia County, Florida and run N.01°48'19"W. along the West line of Section 11, Township 4 South, Range 16 East a distance of 160.09 feet to a point on the South line of "Laurel Meadows Estates", an unrecorded subdivision; thence N.88°05'59"E. along said South line 2.25 feet to the Southeast corner of said "Laurel Meadows Estates"; thence N.01°36'42"W. along the East line of said "Laurel Meadows Estates" 659.77 feet to the Southwest corner of "Country Hills", a subdivision as recorded in Plat book 3, Page 58 of the Public Records of Columbia County, Florida; thence N.88°12'56"E. along the South line of said "Country Hills", being also the North line of the Southwest 1/4 of the Southwest 1/4 of said Section 11, as shown on said recorded Plat of "Country Hills", by B.G. Moore, PLS 439, a distance of 995.52 feet; thence S.01°48'19"E. along the East line of the West 1000 feet of the Southwest 1/4 of the Southwest 1/4 a distance of 806.41 feet to a point on the North line of "Emerald Forest Phase 2", a subdivision as recorded in Plat book 6, Page 77 of the Public Records of Columbia County, Florida; thence S.87°26'41"W. along said North line 280.09 feet; thence S.02°33'19"E. along the West line of Lot 33 of said "Emerald Forest Phase 2" a distance of 195.02 feet to the Point of Curve of a curve concave to the Northeast having a radius of 25.00 feet and a central angle of 90°; thence Southeasterly along the arc of said curve 39.27 feet to a point on the Northerly right-of-way line of Emerald Way; thence S.87°26'41"W. along said Northerly right-of-way line 110.00 feet to the Point of Curve of a curve concave to the Northwest having a radius of 25.00 feet and a central angle of 90°; thence Northeasterly along the arc of said curve 39.27 feet to the Point of Tangency of said curve; thence N.02°33'19"W. along the East line of Lot 32 of said "Emerald Forest Phase 2" a distance of 195.02 feet; thence S.87°26'41"W. along the North line of said "Emerald Forest Phase 2" a distance of 400.00 feet; thence S.02°33'19"E. along the West line of Lot 29 a distance of 195.02 feet to the Point of Curve of a curve concave to the Northeast having a radius of 25.00 feet and a central angle of 90°; thence Southeasterly along the arc of said curve 39.27 feet to a point on the Northerly right-of-way line of Emerald Way; thence S.87°26'41"W. along said Northerly right-of-way line 110.00 feet to the Point of Curve of a curve concave to the Northwest having a radius of 25.00 feet and a central

SIGNED: _____
Clerk of Circuit Court

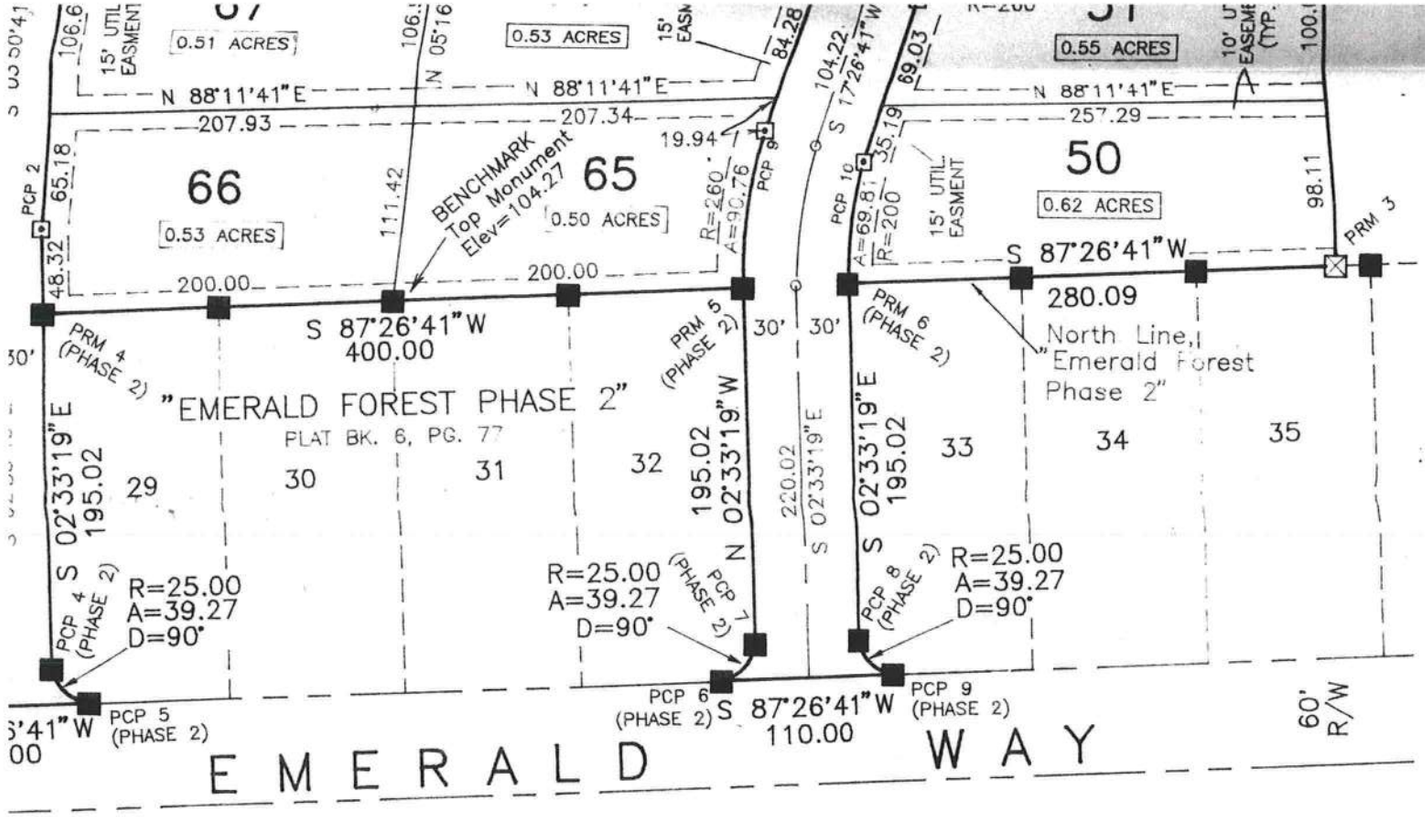

LEGEND & NOTES

1.) PRM X ☒ = P.R.M. set with brass cap monument number and da

2.) PCP X ⊡ = P.C.P. set with brass cap monument number and da

3.) □ = Concrete monument set, st

4.) ■ = Concrete monument found

5.) Boundary based on description furn found in place and client instructi

6.) Bearings projected from south line on a survey by B.R. Wattles, PLS

7.) Interior improvements or undergrou present were not located with this

ENTS that DDP Corporation, as owner, Florida, as mortgagee, and Edna G. ised the lands hereon shown to be o be known as EMERALD FOREST PHASE Easements are hereby dedicated to the es as shown hereon.

Witness: _____

Witness: _____

Witness: _____

Witness: _____

n Central Florida

ACKNOWLEDGEMENT:

STATE OF FLORIDA, COUNTY OF COLUMBIA

The foregoing dedication was acknowledged before me this 20th day of Nov 1992 by O.P. Daughtry, III, President of DDP Corporation, on behalf of the corporation. He is personally known to me or has produced _____ as identification and (did/did not) take an oath.

SIGNED: _____
Notary Public

My Commission Expires:

ACKNOWLEDGEMENT:

STATE OF FLORIDA, COUNTY OF COLUMBIA

The foregoing dedication was acknowledged before me this 20th day of Nov. 1992, by Edna G. Kirby. She is personally known to me or has produced _____ as identification and (did/did not) take an oath.

SIGNED: Cindy R. Duffany
Notary Public

My Commission Expires:

ACKNOWLEDGEM

STATE OF FLORIDA, COUNT COLUMBIA

The foregoing dedication acknowledged before me day of 1 by David M. Barber, Asst. President of Barnett Bar North Central Florida, a F banking Corporation, on b of the corporation. H personally known to me or produced _____ identification and (did/did take an oath.

SIGNED: _____
Notary Public

My Commission

mped PLS 3628,

mped PLS 3628,

ped PLS 3628.

place with survey.

ed, monumentation

Secion 10 and based

encroachments, if
urvey.

8.) Survey closure precision exceeds the requirements of the Minimum Technical Standards for Land Surveying in the State of Florida.

9.) According to the Official Flood Hazard Maps (FIRM) of Columbia County, the described development does not lie within a Flood Zone "A" area. It is within Flood Zone "X", which has been determined to be outside of the 500 year flood plane (ref: Community Panel No. 120070 0175 B).

10.) Preliminary approval date: September 3, 1992.

NOTICE: There may be additional restrictions that are not recorded on this Plat that may be found in the Public Records of this County.

NOTICE: All Utility easements shown on this Plat shall constitute easements for the construction, installation, maintenance, and operation of electricity, telephone, CATV, and other public utilities which may serve the lands encompassed by this Plat.

ACCEPTANCE FOR MAINTENANCE

I HEREBY CERTIFY that the improvements have been constructed in an acceptable manner and in accordance with County specifications or that a performance bond or instrument in the amount of $_____ has been posted to assure completion of all required improvements and maintenance in case of default.

NT:
OF

SIGNED: J. L. Brooks DATE: 12-7-92
Director of Public Works

COUNTY ATTORNEY'S CERTIFICATE

I HEREBY CERTIFY that I have examined the foregoing Plat and that it complies with the Columbia County Subdivision Ordinance and Chapter 177 of the Florida Statutes.

SIGNED: Marlin Feagle DATE: 12-3-92
County Attorney, Columbia Co.

SURVEYOR'S CERTIFICATE

I HEREBY CERTIFY this Plat to be a true and correct representation of the lands surveyed and shown hereon, that the survey was made under my responsible supervision, direction and control, that Permanent Reference Monuments have been set as shown and that the survey complies with the Columbia County Subdivision Ordinance and Chapter 177 of the Florida Statutes.

SIGNED: Donald F. Lee DATE: 11/20/92

SEAL

Donald F. Lee, P.L.S.
Florida Reg. # 3628

950 S. RIDGEWOOD DRIVE
LAKE CITY, FLORIDA 32055
PH: (904) 755-6166

Recording	$ 18.50
DocStamps	$ 279.30
Intangible Tax	$
Total	$ 297.80

Inst:2005026171 Date:10/20/2005 Time:12:55
Doc Stamp-Deed : 279.30
MK DC,P.DeWitt Cason,Columbia County B:1062 P:1295

Prepared by and return to:
David E. Menet, Esq.
Attorney at Law
Salter, Feiber, Murphy, Hutson, & Menet, P.A.
Post Office Box 357399
Gainesville, FL 32635-7399
352-376-8201
File Number: **05-1975.7** (dgg)

[Space Above This Line For Recording Data]

RETURN TO: SFM:H&M

Warranty Deed

This Warranty Deed made this **14th** day of **October, 2005** between **Christopher J. Curry, a married person** whose post office address is **P.O. Box 215, Lake City, FL 32056**, grantor, and **Sparks Contractors, Inc., a Florida corporation** whose post office address is **162 SW Country Court, Lake City, FL 32024**, grantee:

(Whenever used herein the terms "grantor" and "grantee" include all the parties to this instrument and the heirs, legal representatives, and assigns of individuals, and the successors and assigns of corporations, trusts and trustees)

Witnesseth, that said grantor, for and in consideration of the sum of TEN AND NO/100 DOLLARS ($10.00) and other good and valuable considerations to said grantor in hand paid by said grantee, the receipt whereof is hereby acknowledged, has granted, bargained, and sold to the said grantee, and grantee's heirs and assigns forever, the following described land, situate, lying and being in **Columbia County, Florida** to-wit:

Lot Fifty (50, EMERALD FOREST PHASE III, a Subdivision according to the plat thereof recorded in Plat Book 6, Page 85, of Public Records of Columbia County, Florida.

Parcel Identification Number: R02919-250

Grantor warrants that at the time of this conveyance, the subject property is not the Grantor's homestead within the meaning set forth in the constitution of the state of Florida, nor is it contiguous to or a part of homestead property. Grantor's residence and homestead address is:
118 SW Sweetbriar Lane, Lake City, Florida 32024.

Subject to covenants, conditions, restrictions, easements, reservations, and limitations of record, if any.

Together with all the tenements, hereditaments and appurtenances thereto belonging or in anywise appertaining.

To Have and to Hold, the same in fee simple forever.

And the grantor hereby covenants with said grantee that the grantor is lawfully seized of said land in fee simple; that the grantor has good right and lawful authority to sell and convey said land; that the grantor hereby fully warrants the title to said land and will defend the same against the lawful claims of all persons whomsoever; and that said land is free of all encumbrances, except taxes accruing subsequent to **December 31, 2004**.

DoubleTime®

In Witness Whereof, grantor has hereunto set grantor's hand and seal the day and year first above written.

Signed, sealed and delivered in our presence:

Witness Name: PATRICK TREES

Witness Name: Ben Curry

(Seal)
Christopher J. Curry

State of Florida
County of Alachua

The foregoing instrument was acknowledged before me this 13 day of October, 2005 by Christopher J. Curry, who [_] is personally known or [X] has produced a driver's license as identification.

[Notary Seal]

JESSICA D LAW
Notary Public - State of Florida
My Commission Expires Nov 3, 2007
Commission # DD264346
Bonded By National Notary Assn.

Notary Public

Printed Name: Jessica Law

My Commission Expires: Nov. 3 2007

Inst:2005026171 Date:10/20/2005 Time:12:55
Doc Stamp-Deed : 279.30
DC,P.DeWitt Cason,Columbia County B:1062 P:1296

DoubleTime®

Site Plan Lot 50 Emerald Forest

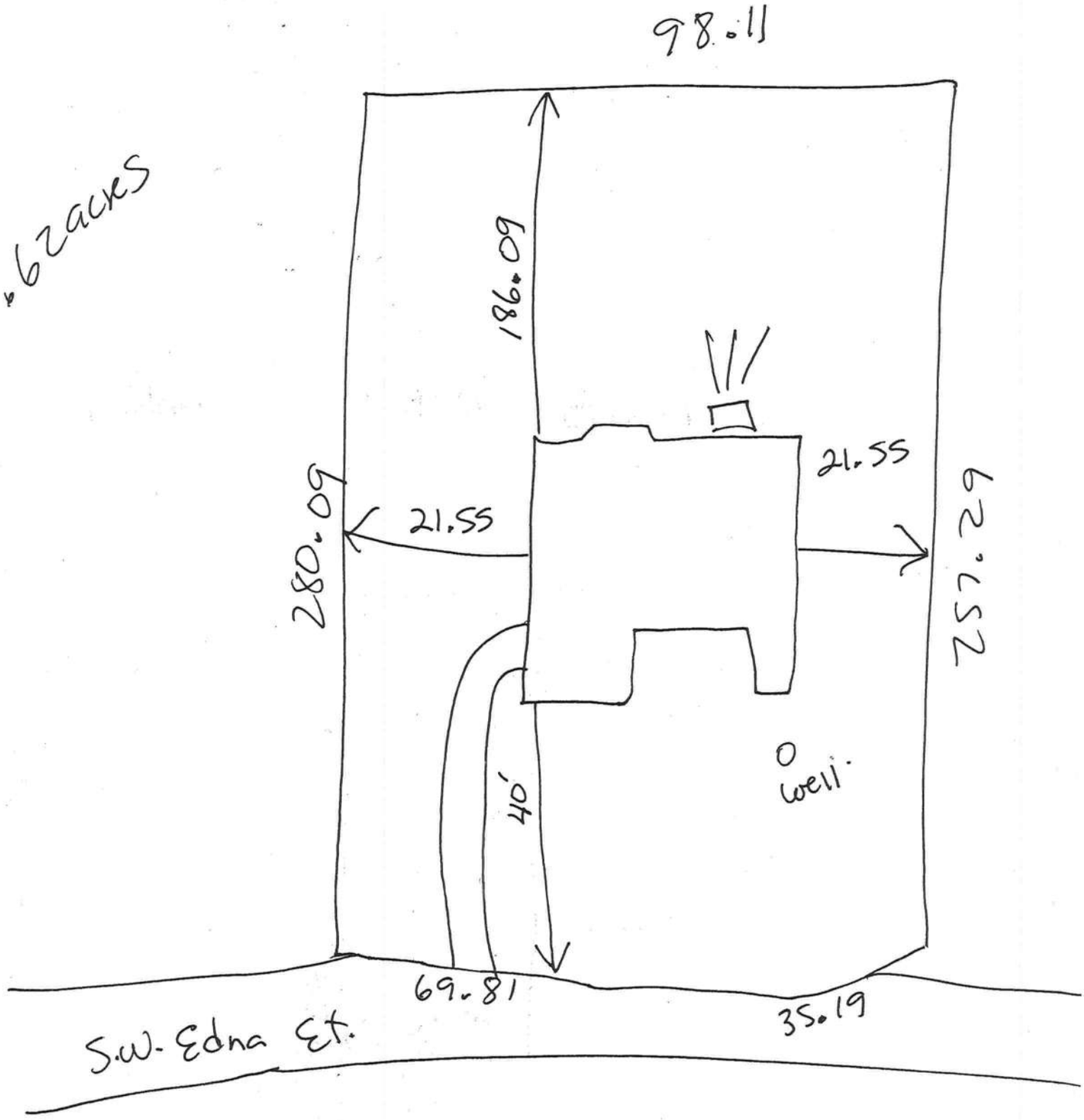

Application for Onsite Sewage Disposal System Construction Permit. Part II Site Plan

Permit Application Number: 05-1098N

ALL CHANGES MUST BE APPROVED BY THE COUNTY HEALTH UNIT

SPARKS CONST/CR 05-3120

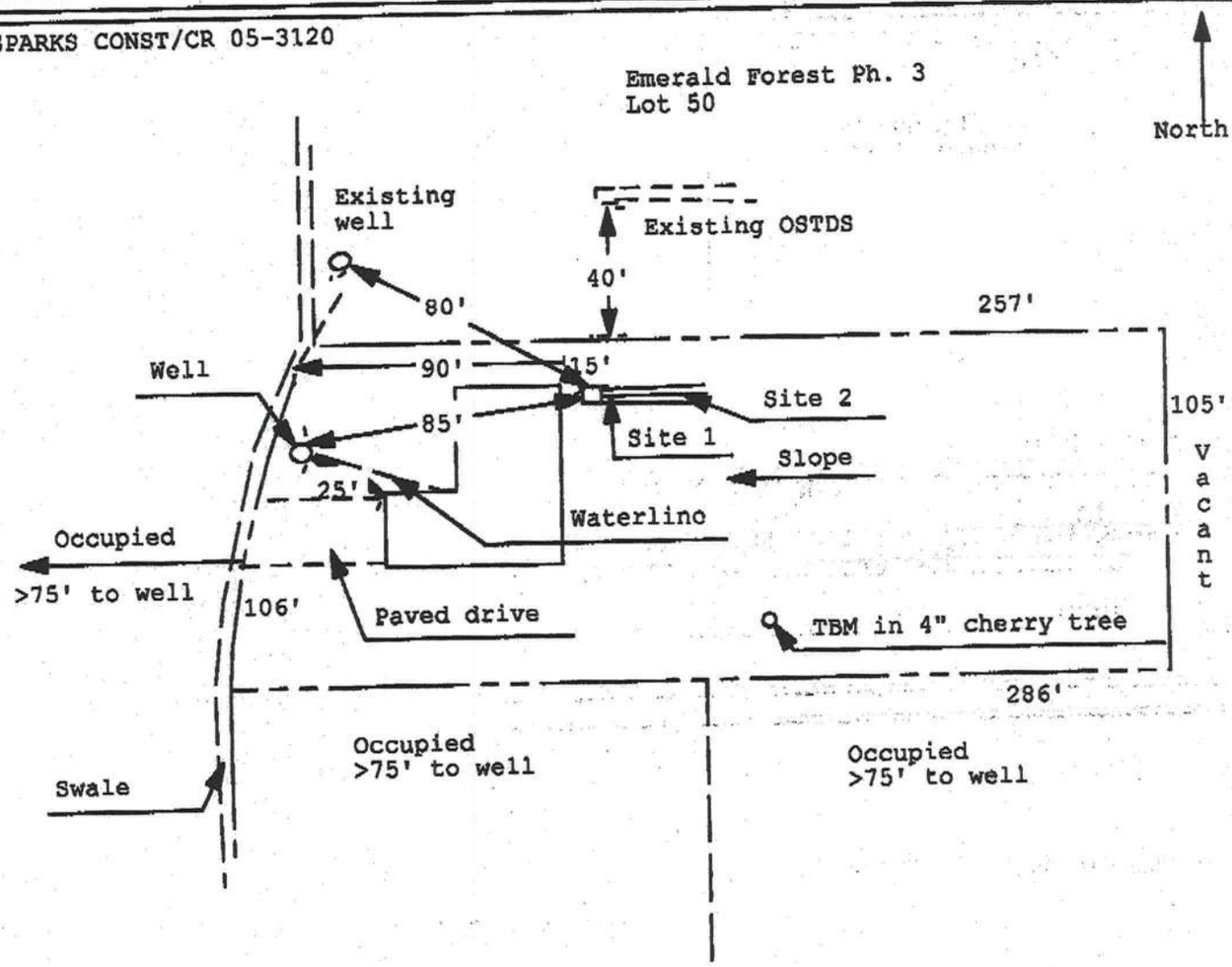

1 inch = 50 feet

Site Plan Submitted By Paul Lloyd Date 9/29/05

Plan Approved ✓ Not Approved ____ Date 10/26/05

By [illegible] Columbia CPHU

Notes: ____

FORM 600A-2001 EnergyGauge® 3.4

FLORIDA ENERGY EFFICIENCY CODE FOR BUILDING CONSTRUCTION

Florida Department of Community Affairs

Residential Whole Building Performance Method A

Project Name:	**509016SparksConstructionSpecHouse**	Builder:	
Address:	**Lot: 50, Sub: Emerald Forest, Plat:**	Permitting Office:	
City, State:	**Lake City, FL**	Permit Number:	
Owner:	**Spec House**	Jurisdiction Number:	
Climate Zone:	**North**		

1. New construction or existing		New	__
2. Single family or multi-family		Single family	__
3. Number of units, if multi-family		1	__
4. Number of Bedrooms		3	__
5. Is this a worst case?		Yes	__
6. Conditioned floor area (ft²)		1688 ft²	__
7. Glass area & type	Single Pane	Double Pane	
a. Clear glass, default U-factor	0.0 ft²	273.0 ft²	__
b. Default tint, default U-factor	0.0 ft²	0.0 ft²	__
c. Labeled U-factor or SHGC	0.0 ft²	0.0 ft²	__
8. Floor types			
a. Slab-On-Grade Edge Insulation		R=0.0, 187.0(p) ft	__
b. N/A			__
c. N/A			__
9. Wall types			
a. Frame, Wood, Exterior		R=13.0, 1167.0 ft²	__
b. Frame, Wood, Adjacent		R=13.0, 156.0 ft²	__
c. N/A			__
d. N/A			__
e. N/A			__
10. Ceiling types			__
a. Under Attic		R=30.0, 1815.0 ft²	
b. N/A			__
c. N/A			__
11. Ducts			__
a. Sup: Unc. Ret: Unc. AH: Interior		Sup. R=6.0, 175.0 ft	
b. N/A			__
			__

12. Cooling systems		
a. Central Unit	Cap: 37.0 kBtu/hr	__
	SEER: 11.00	__
b. N/A		__
		__
c. N/A		__
		__
13. Heating systems		
a. Electric Heat Pump	Cap: 37.0 kBtu/hr	__
	HSPF: 7.30	__
b. N/A		__
		__
c. N/A		__
		__
14. Hot water systems		
a. Electric Resistance	Cap: 40.0 gallons	__
	EF: 0.89	__
b. N/A		__
		__
c. Conservation credits		__
(HR-Heat recovery, Solar DHP-Dedicated heat pump)		
15. HVAC credits		__
(CF-Ceiling fan, CV-Cross ventilation, HF-Whole house fan, PT-Programmable Thermostat, MZ-C-Multizone cooling, MZ-H-Multizone heating)		

Glass/Floor Area: 0.16

Total as-built points: 25663
Total base points: 26033

PASS

I hereby certify that the plans and specifications covered by this calculation are in compliance with the Florida Energy Code.

PREPARED BY: Ben Sparks

DATE: 10-4-05 Ben Sparks

I hereby certify that this building, as designed, is in compliance with the Florida Energy Code.

OWNER/AGENT: Linda Rodda

DATE: 10-18-05

Review of the plans and specifications covered by this calculation indicates compliance with the Florida Energy Code. Before construction is completed this building will be inspected for compliance with Section 553.908 Florida Statutes.

GREAT SEAL OF THE STATE OF FLORIDA — IN GOD WE TRUST

BUILDING OFFICIAL: _____

DATE: _____

SUMMER CALCULATIONS

Residential Whole Building Performance Method A - Details

ADDRESS: **Lot: 50, Sub: Emerald Forest, Plat: , Lake City, FL,** PERMIT #:

BASE

GLASS TYPES

.18 X	Conditioned Floor Area	X BSPM	= Points
.18	**1688.0**	**20.04**	**6089.0**

AS-BUILT

Type/SC	Overhang Ornt	Len	Hgt	Area X	SPM X	SOF =	Points
Double, Clear	SE	1.5	6.5	30.0	42.75	0.90	1157.3
Double, Clear	E	2.0	7.5	18.0	42.06	0.90	682.0
Double, Clear	SE	5.5	7.5	24.0	42.75	0.56	573.0
Double, Clear	S	15.0	7.5	18.0	35.87	0.45	291.3
Double, Clear	SE	8.1	6.5	30.0	42.75	0.45	583.1
Double, Clear	SE	8.0	8.0	20.0	42.75	0.49	423.1
Double, Clear	SE	8.0	3.0	6.0	42.75	0.38	98.0
Double, Clear	SW	1.5	5.5	15.0	40.16	0.86	519.9
Double, Clear	SW	1.5	1.5	4.0	40.16	0.49	78.8
Double, Clear	NW	0.0	0.0	30.0	25.97	1.00	779.2
Double, Clear	NW	7.0	9.0	14.0	25.97	0.68	248.7
Double, Clear	NW	7.0	3.0	18.0	25.97	0.53	248.6
Double, Clear	NE	1.5	4.5	16.0	29.56	0.86	408.2
Double, Clear	NE	1.5	5.5	30.0	29.56	0.91	802.9
As-Built Total:				**273.0**			**6894.0**

WALL TYPES	Area X	BSPM =	Points	Type	R-Value	Area X	SPM =	Points
Adjacent	156.0	0.70	109.2	Frame, Wood, Exterior	13.0	1167.0	1.50	1750.5
Exterior	1167.0	1.70	1983.9	Frame, Wood, Adjacent	13.0	156.0	0.60	93.6
Base Total:	**1323.0**		**2093.1**	**As-Built Total:**		**1323.0**		**1844.1**

DOOR TYPES	Area X	BSPM =	Points	Type	Area X	SPM =	Points
Adjacent	20.0	2.40	48.0	Exterior Insulated	20.0	4.10	82.0
Exterior	40.0	6.10	244.0	Exterior Insulated	20.0	4.10	82.0
				Adjacent Insulated	20.0	1.60	32.0
Base Total:	**60.0**		**292.0**	**As-Built Total:**	**60.0**		**196.0**

CEILING TYPES	Area X	BSPM =	Points	Type	R-Value	Area X	SPM X SCM =	Points
Under Attic	1688.0	1.73	2920.2	Under Attic	30.0	1815.0	1.73 X 1.00	3139.9
Base Total:	**1688.0**		**2920.2**	**As-Built Total:**		**1815.0**		**3139.9**

FLOOR TYPES	Area X	BSPM =	Points	Type	R-Value	Area X	SPM =	Points
Slab	187.0(p)	-37.0	-6919.0	Slab-On-Grade Edge Insulation	0.0	187.0(p	-41.20	-7704.4
Raised	0.0	0.00	0.0					
Base Total:			**-6919.0**	**As-Built Total:**		**187.0**		**-7704.4**

SUMMER CALCULATIONS

Residential Whole Building Performance Method A - Details

ADDRESS: **Lot: 50, Sub: Emerald Forest, Plat: , Lake City, FL,** PERMIT #:

BASE						AS-BUILT							
INFILTRATION	Area	X	BSPM	=	Points				Area	X	SPM	=	Points
	1688.0		10.21		17234.5				1688.0		10.21		17234.5
Summer Base Points:					**21709.8**	**Summer As-Built Points:**							**21604.1**
Total Summer Points	X	System Multiplier	=	Cooling Points		Total Component	X	Cap Ratio	X	Duct Multiplier (DM x DSM x AHU)	X	System Multiplier	X	Credit Multiplier	=	Cooling Points
21709.8		**0.4266**		**9261.4**		21604.1 **21604.1**		1.000 **1.00**		(1.090 x 1.147 x 0.91) **1.138**		0.310 **0.310**		1.000 **1.000**		7626.3 **7626.3**

WINTER CALCULATIONS

Residential Whole Building Performance Method A - Details

ADDRESS: **Lot: 50, Sub: Emerald Forest, Plat: , Lake City, FL,** PERMIT #:

BASE

GLASS TYPES

.18 X	Conditioned Floor Area	X BWPM	= Points
.18	**1688.0**	**12.74**	**3870.9**

AS-BUILT

Type/SC	Overhang Ornt	Len	Hgt	Area X	WPM X	WOF =	Points
Double, Clear	SE	1.5	6.5	30.0	14.71	1.08	477.2
Double, Clear	E	2.0	7.5	18.0	18.79	1.04	351.7
Double, Clear	SE	5.5	7.5	24.0	14.71	1.66	586.6
Double, Clear	S	15.0	7.5	18.0	13.30	3.51	839.0
Double, Clear	SE	8.1	6.5	30.0	14.71	2.14	945.1
Double, Clear	SE	8.0	8.0	20.0	14.71	1.94	569.3
Double, Clear	SE	8.0	3.0	6.0	14.71	2.63	232.3
Double, Clear	SW	1.5	5.5	15.0	16.74	1.07	269.2
Double, Clear	SW	1.5	1.5	4.0	16.74	1.60	107.1
Double, Clear	NW	0.0	0.0	30.0	24.30	1.00	728.9
Double, Clear	NW	7.0	9.0	14.0	24.30	1.02	347.3
Double, Clear	NW	7.0	3.0	18.0	24.30	1.03	452.4
Double, Clear	NE	1.5	4.5	16.0	23.57	1.01	381.9
Double, Clear	NE	1.5	5.5	30.0	23.57	1.01	712.7
As-Built Total:				**273.0**			**7000.7**

WALL TYPES	Area X	BWPM =	Points	Type	R-Value	Area X	WPM =	Points
Adjacent	156.0	3.60	561.6	Frame, Wood, Exterior	13.0	1167.0	3.40	3967.8
Exterior	1167.0	3.70	4317.9	Frame, Wood, Adjacent	13.0	156.0	3.30	514.8
Base Total:	**1323.0**		**4879.5**	**As-Built Total:**		**1323.0**		**4482.6**

DOOR TYPES	Area X	BWPM =	Points	Type	Area X	WPM =	Points
Adjacent	20.0	11.50	230.0	Exterior Insulated	20.0	8.40	168.0
Exterior	40.0	12.30	492.0	Exterior Insulated	20.0	8.40	168.0
				Adjacent Insulated	20.0	8.00	160.0
Base Total:	**60.0**		**722.0**	**As-Built Total:**	**60.0**		**496.0**

CEILING TYPES	Area X	BWPM =	Points	Type	R-Value	Area X	WPM X WCM =	Points
Under Attic	1688.0	2.05	3460.4	Under Attic	30.0	1815.0	2.05 X 1.00	3720.8
Base Total:	**1688.0**		**3460.4**	**As-Built Total:**		**1815.0**		**3720.8**

FLOOR TYPES	Area X	BWPM =	Points	Type	R-Value	Area X	WPM =	Points
Slab	187.0(p)	8.9	1664.3	Slab-On-Grade Edge Insulation	0.0	187.0(p	18.80	3515.6
Raised	0.0	0.00	0.0					
Base Total:			**1664.3**	**As-Built Total:**		**187.0**		**3515.6**

WINTER CALCULATIONS

Residential Whole Building Performance Method A - Details

ADDRESS: **Lot: 50, Sub: Emerald Forest, Plat: , Lake City, FL,** PERMIT #:

BASE				AS-BUILT						
INFILTRATION	Area X	BWPM	= Points				Area X	WPM	=	Points
	1688.0	-0.59	-995.9				1688.0	-0.59		-995.9
Winter Base Points:			**13601.2**	**Winter As-Built Points:**						**18219.7**
Total Winter Points	X System Multiplier	=	Heating Points	Total Component	X Cap Ratio	X Duct Multiplier (DM x DSM x AHU)	X System Multiplier	X Credit Multiplier	=	Heating Points
13601.2	**0.6274**		**8533.4**	18219.7 **18219.7**	1.000 **1.00**	(1.069 x 1.169 x 0.93) **1.162**	0.467 **0.467**	1.000 **1.000**		9891.2 **9891.2**

WATER HEATING & CODE COMPLIANCE STATUS

Residential Whole Building Performance Method A - Details

ADDRESS: **Lot: 50, Sub: Emerald Forest, Plat: , Lake City, FL,** PERMIT #:

BASE				AS-BUILT							
WATER HEATING											
Number of Bedrooms	X	Multiplier	= Total	Tank Volume	EF	Number of Bedrooms	X	Tank Ratio	X Multiplier	X Credit Multiplier	= Total
3		2746.00	8238.0	40.0	0.89	3		1.00	2715.15	1.00	8145.4
				As-Built Total:							**8145.4**

CODE COMPLIANCE STATUS

BASE				AS-BUILT			
Cooling Points +	Heating Points +	Hot Water Points =	Total Points	Cooling Points +	Heating Points +	Hot Water Points =	Total Points
9261	**8533**	**8238**	**26033**	**7626**	**9891**	**8145**	**25663**

PASS

Code Compliance Checklist

Residential Whole Building Performance Method A - Details

ADDRESS: **Lot: 50, Sub: Emerald Forest, Plat: , Lake City, FL,** PERMIT #:

6A-21 INFILTRATION REDUCTION COMPLIANCE CHECKLIST

COMPONENTS	SECTION	REQUIREMENTS FOR EACH PRACTICE	CHECK
Exterior Windows & Doors	606.1.ABC.1.1	Maximum:.3 cfm/sq.ft. window area; .5 cfm/sq.ft. door area.	
Exterior & Adjacent Walls	606.1.ABC.1.2.1	Caulk, gasket, weatherstrip or seal between: windows/doors & frames, surrounding wall; foundation & wall sole or sill plate; joints between exterior wall panels at corners; utility penetrations; between wall panels & top/bottom plates; between walls and floor. EXCEPTION: Frame walls where a continuous infiltration barrier is installed that extends from, and is sealed to, the foundation to the top plate.	
Floors	606.1.ABC.1.2.2	Penetrations/openings >1/8" sealed unless backed by truss or joint members. EXCEPTION: Frame floors where a continuous infiltration barrier is installed that is sealed to the perimeter, penetrations and seams.	
Ceilings	606.1.ABC.1.2.3	Between walls & ceilings; penetrations of ceiling plane of top floor; around shafts, chases, soffits, chimneys, cabinets sealed to continuous air barrier; gaps in gyp board & top plate; attic access. EXCEPTION: Frame ceilings where a continuous infiltration barrier is installed that is sealed at the perimeter, at penetrations and seams.	
Recessed Lighting Fixtures	606.1.ABC.1.2.4	Type IC rated with no penetrations, sealed; or Type IC or non-IC rated, installed inside a sealed box with 1/2" clearance & 3" from insulation; or Type IC rated with < 2.0 cfm from conditioned space, tested.	
Multi-story Houses	606.1.ABC.1.2.5	Air barrier on perimeter of floor cavity between floors.	
Additional Infiltration reqts	606.1.ABC.1.3	Exhaust fans vented to outdoors, dampers; combustion space heaters comply with NFPA, have combustion air.	

6A-22 OTHER PRESCRIPTIVE MEASURES (must be met or exceeded by all residences.)

COMPONENTS	SECTION	REQUIREMENTS	CHECK
Water Heaters	612.1	Comply with efficiency requirements in Table 6-12. Switch or clearly marked circuit breaker (electric) or cutoff (gas) must be provided. External or built-in heat trap required.	
Swimming Pools & Spas	612.1	Spas & heated pools must have covers (except solar heated). Non-commercial pools must have a pump timer. Gas spa & pool heaters must have a minimum thermal efficiency of 78%.	
Shower heads	612.1	Water flow must be restricted to no more than 2.5 gallons per minute at 80 PSIG.	
Air Distribution Systems	610.1	All ducts, fittings, mechanical equipment and plenum chambers shall be mechanically attached, sealed, insulated, and installed in accordance with the criteria of Section 610. Ducts in unconditioned attics: R-6 min. insulation.	
HVAC Controls	607.1	Separate readily accessible manual or automatic thermostat for each system.	
Insulation	604.1, 602.1	Ceilings-Min. R-19. Common walls-Frame R-11 or CBS R-3 both sides. Common ceiling & floors R-11.	

ENERGY PERFORMANCE LEVEL (EPL) DISPLAY CARD

ESTIMATED ENERGY PERFORMANCE SCORE* = 83.1

The higher the score, the more efficient the home.

Spec House, Lot: 50, Sub: Emerald Forest, Plat: , Lake City, FL,

1. New construction or existing		New	
2. Single family or multi-family		Single family	
3. Number of units, if multi-family		1	
4. Number of Bedrooms		3	
5. Is this a worst case?		Yes	
6. Conditioned floor area (ft²)		1688 ft²	
7. Glass area & type	Single Pane	Double Pane	
a. Clear glass, default U-factor	0.0 ft²	273.0 ft²	
b. Default tint, default U-factor	0.0 ft²	0.0 ft²	
c. Labeled U-factor or SHGC	0.0 ft²	0.0 ft²	
8. Floor types			
a. Slab-On-Grade Edge Insulation		R=0.0, 187.0(p) ft	
b. N/A			
c. N/A			
9. Wall types			
a. Frame, Wood, Exterior		R=13.0, 1167.0 ft²	
b. Frame, Wood, Adjacent		R=13.0, 156.0 ft²	
c. N/A			
d. N/A			
e. N/A			
10. Ceiling types			
a. Under Attic		R=30.0, 1815.0 ft²	
b. N/A			
c. N/A			
11. Ducts			
a. Sup: Unc. Ret: Unc. AH: Interior		Sup. R=6.0, 175.0 ft	
b. N/A			

12. Cooling systems		
a. Central Unit	Cap: 37.0 kBtu/hr	
	SEER: 11.00	
b. N/A		
c. N/A		
13. Heating systems		
a. Electric Heat Pump	Cap: 37.0 kBtu/hr	
	HSPF: 7.30	
b. N/A		
c. N/A		
14. Hot water systems		
a. Electric Resistance	Cap: 40.0 gallons	
	EF: 0.89	
b. N/A		
c. Conservation credits (HR-Heat recovery, Solar DHP-Dedicated heat pump)		
15. HVAC credits (CF-Ceiling fan, CV-Cross ventilation, HF-Whole house fan, PT-Programmable Thermostat, MZ-C-Multizone cooling, MZ-H-Multizone heating)		

I certify that this home has complied with the Florida Energy Efficiency Code For Building Construction through the above energy saving features which will be installed (or exceeded) in this home before final inspection. Otherwise, a new EPL Display Card will be completed based on installed Code compliant features.

Builder Signature: _____ Date: _____

Address of New Home: _____ City/FL Zip: _____

**NOTE: The home's estimated energy performance score is only available through the FLA/RES computer program. This is not a Building Energy Rating. If your score is 80 or greater (or 86 for a US EPA/DOE EnergyStar™ designation), your home may qualify for energy efficiency mortgage (EEM) incentives if you obtain a Florida Energy Gauge Rating. Contact the Energy Gauge Hotline at 321/638-1492 or see the Energy Gauge web site at www.fsec.ucf.edu for information and a list of certified Raters. For information about Florida's Energy Efficiency Code For Building Construction, contact the Department of Community Affairs at 850/488-7824.*

EnergyGauge® (Version: FLR2PB v3.4)

LIMITED POWER OF ATTORNEY

I, Josh Sparks, do hereby authorize Linda or Melanie Roder to be my representative and act on my behalf in all aspects of applying for a septic & building permits to be placed on property in Suwannee County, Florida described as follows:

Owner's Name: Sparks Contractors Inc → lots 50 Emerald Forest

Section 11 Twp 4S Rge 16

Tax Parcel No. 02919-250 → Lot 40 Turkey Run

X _____
(Contractor's Signature)

9-27-05
(Date)

Sworn to and subscribed before me this 27 day of Sept, 2005.

_____
Notary Public

My Commission expires: 3-24-08
Commission No: DD303275
Personally Known: _____
Produced ID (Type): _____

Linda R. Roder
Commission #DD303275
Expires: Mar 24, 2008
Bonded Thru
Atlantic Bonding Co., Inc.

HALL'S PUMP & WELL SERVICE, INC.

SPECIALIZING IN 4"-6" WELLS

DONALD AND MARY HALL
OWNERS

PHONE (904) 752-1994
FAX (904) 755-7022
[redacted]
LAKE CITY, FLORIDA 32055
904 NW Main Blvd.

June 12, 2002

NOTICE TO ALL CONTRACTORS

Please be advised that due to the new building codes we will use a large capacity diaphram tank on all new wells. This will insure a minimum of one (1) minute draw down or one (1) minute refill. If a smaller diaphram tank is used then we will install a cycle stop valve which will produce the same results.

If you have any questions please feel free to call our office anytime.

Thank you,

Donald D. Hall
DDH/jk

Project Information for: L132306
Builder: SPARKS Date: 11/14/2005
Lot: LOT 50 EMERALD FORREST Start Number: 1606
Subdivision: N/A
County or City: COLUMBIA COUNTY
Truss Page Count: 32

Truss Design Load Information (UNO) Design Program: MiTek 5.2 / 6.2

Gravity		**Wind**		**Building Code:**	FBC2001
Roof (psf):	42	Wind Standard:	ASCE 7-98		
Floor (psf):	55	Wind Speed (mph):	120		

Note: See individual truss drawings for special loading conditions

Building Designer, responsible for Structural Engineering: (See attached)
SPARKS, JOSHUA D. CBC 1252260
Address: 130 S W COUNTRY CT
LIVE OAK FL 32060 Designer: 114

Truss Design Engineer: Thomas, E. Miller, P.E., 56877 - Byron K. Anderson, PE FL 60987
Company: Structural Engineering and Inspections, Inc. EB 9196
Address 16105 N. Florida Ave, Ste B, Lutz, FL 33549

Notes:
1. Truss Design Engineer is responsible for the individual trusses as components only.
2. Determination as to the suitability and use of these truss components for the structure is the responsibility of the Building Designer of Record, as defined in ANSI/TPI
3. The seal date shown on the individual truss component drawings must match the seal date on this index sheet.
4. Trusses designed for veritcal loads only, unless noted otherwise.

#	Truss ID	Dwg. #	Seal Date	#	Truss ID	Dwg. #	Seal Date
1	CJ1	1114051606	11/14/2005				
2	CJ3	1114051607	11/14/2005				
3	CJ5	1114051608	11/14/2005				
4	EJ7	1114051609	11/14/2005				
5	EJ7A	1114051610	11/14/2005				
6	EJ7B	1114051611	11/14/2005				
7	EJ7C	1114051612	11/14/2005				
8	HJ7	1114051613	11/14/2005				
9	T01	1114051614	11/14/2005				
10	T01G	1114051615	11/14/2005				
11	T02	1114051616	11/14/2005				
12	T02G	1114051617	11/14/2005				
13	T03	1114051618	11/14/2005				
14	T03G	1114051619	11/14/2005				
15	T04	1114051620	11/14/2005				
16	T05	1114051621	11/14/2005				
17	T06	1114051622	11/14/2005				
18	T07	1114051623	11/14/2005				
19	T08	1114051624	11/14/2005				
20	T09	1114051625	11/14/2005				
21	T10	1114051626	11/14/2005				
22	T11	1114051627	11/14/2005				
23	T12	1114051628	11/14/2005				
24	T13	1114051629	11/14/2005				
25	T14	1114051630	11/14/2005				
26	T15	1114051631	11/14/2005				
27	T16	1114051632	11/14/2005				
28	T17	1114051633	11/14/2005				
29	T18	1114051634	11/14/2005				
30	T19	1114051635	11/14/2005				
31	T20	1114051636	11/14/2005				
32	T21	1114051637	11/14/2005				

NOV 14 2005

Dwg.#1114051605

Log On

DBPR Home | Online Services Home | Help | Site Map

Public Services

- Search for a Licensee
- Apply for a License
- View Application Status
- Apply to Retake Exam
- Find Exam Information
- Find a CE Course
- File a Complaint
- AB&T Delinquent Invoice & Activity List Search

User Services

- Renew a License
- Change License Status
- Maintain Account
- Change My Address
- View Messages
- Change My PIN
- View Continuing Ed

Term Glossary

Online Help

08:50:44 AM

Search Results

Please see our glossary of terms for an explanation of the license status shown in these search results.

License Type	Name	Name Type	License Number/ Rank	Status/ Expires
Certified Building Contractor	SPARKS, JOSHUA DAVID	Primary	CBC1252260 Cert Building	Current, Active 08/31/2006

New S

| Terms of Use | | Privacy Statement |

NOVEMBER 14,2005 TRUSS DESIGN ENGINEER:
THOMAS E. MILLER PE 56877, BYRON K. ANDERSON PE 60987
STRUCTURAL ENGINEERING AND INSPECTIONS, INC. EB 9196
16105 N. FLORIDA AVE. STE B, LUTZ, FL 33549

Job	Truss	Truss Type	Qty	Ply	Dwg.#1114051606
L132306	CJ1	MONO TRUSS	4	1	Job Reference (optional)

Builders FirstSource, Lake City, Fl 32055 — 6.200 s Jul 13 2005 MiTek Industries, Inc. Tue Sep 27 15:52:44 2005 Page 1

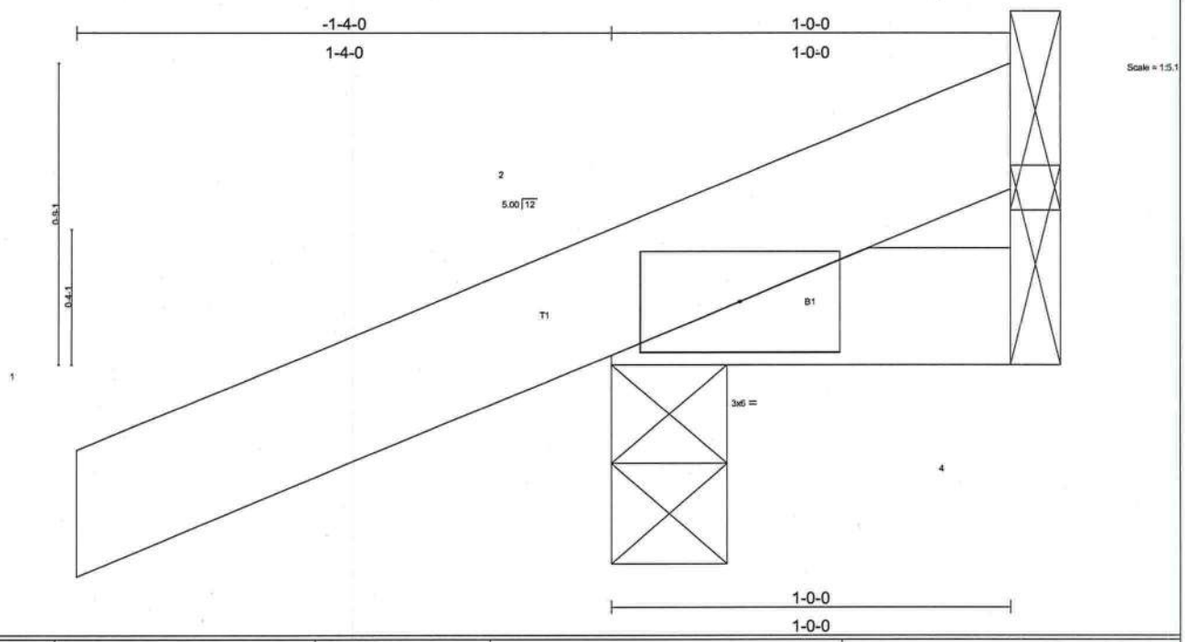

LOADING (psf)		SPACING	2-0-0	CSI		DEFL	in	(loc)	l/defl	L/d	PLATES	GRIP
TCLL	20.0	Plates Increase	1.25	TC	0.12	Vert(LL)	-0.00	2	>999	240	MT20	244/190
TCDL	7.0	Lumber Increase	1.25	BC	0.01	Vert(TL)	-0.00	2	>999	180		
BCLL	10.0	Rep Stress Incr	YES	WB	0.00	Horz(TL)	-0.00	3	n/a	n/a		
BCDL	5.0	Code FBC2001/TPI2002		(Matrix)							Weight: 5 lb	

LUMBER
TOP CHORD 2 X 4 SYP No.2D
BOT CHORD 2 X 4 SYP No.2D

BRACING
TOP CHORD Structural wood sheathing directly applied or 1-0-0 oc purlins.
BOT CHORD Rigid ceiling directly applied or 10-0-0 oc bracing.

REACTIONS (lb/size) 2=166/0-3-8, 4=14/Mechanical, 3=-26/Mechanical
Max Horz 2=64(load case 5)
Max Uplift2=-198(load case 5), 4=-11(load case 3), 3=-26(load case 1)
Max Grav 2=166(load case 1), 4=14(load case 1), 3=49(load case 5)

FORCES (lb) - Maximum Compression/Maximum Tension
TOP CHORD 1-2=0/26, 2-3=-33/20
BOT CHORD 2-4=0/0

NOTES
1) Wind: ASCE 7-98; 120mph (3-second gust); h=20ft; TCDL=4.2psf; BCDL=3.0psf; Category II; Exp B; enclosed; MWFRS gable end zone and C-C Exterior(2) zone; porch left and right exposed; Lumber DOL=1.60 plate grip DOL=1.60. This truss is designed for C-C for members and forces, and for MWFRS for reactions specified.
2) Refer to girder(s) for truss to truss connections.
3) Provide mechanical connection (by others) of truss to bearing plate capable of withstanding 198 lb uplift at joint 2, 11 lb uplift at joint 4 and 26 lb uplift at joint 3.

LOAD CASE(S) Standard

NOVEMBER 14,2005 TRUSS DESIGN ENGINEER:
THOMAS E. MILLER PE 56877, BYRON K. ANDERSON PE 60987
STRUCTURAL ENGINEERING AND INSPECTIONS, INC. EB 9196
16105 N. FLORIDA AVE. STE B, LUTZ, FL 33549

Job	Truss	Truss Type	Qty	Ply	Dwg.#1114051607
L132306	CJ3	MONO TRUSS	4	1	Job Reference (optional)

Builders FirstSource, Lake City, Fl 32055 — 6.200 s Jul 13 2005 MiTek Industries, Inc. Tue Sep 27 15:52:45 2005 Page 1

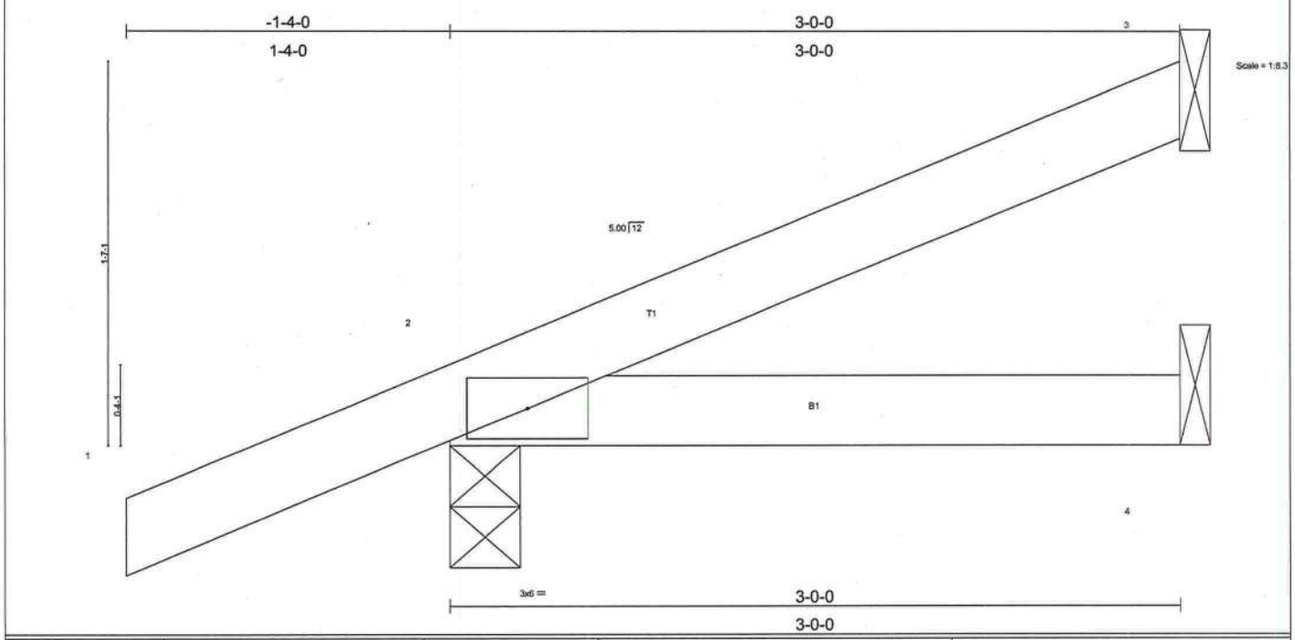

LOADING (psf)		SPACING	2-0-0	CSI		DEFL	in	(loc)	l/defl	L/d	PLATES	GRIP
TCLL	20.0	Plates Increase	1.25	TC	0.14	Vert(LL)	0.01	2-4	>999	240	MT20	244/190
TCDL	7.0	Lumber Increase	1.25	BC	0.09	Vert(TL)	0.01	2-4	>999	180		
BCLL	10.0	Rep Stress Incr	YES	WB	0.00	Horz(TL)	-0.00	3	n/a	n/a		
BCDL	5.0	Code FBC2001/TPI2002		(Matrix)							Weight: 12 lb	

LUMBER
TOP CHORD 2 X 4 SYP No.2D
BOT CHORD 2 X 4 SYP No.2D

BRACING
TOP CHORD Structural wood sheathing directly applied or 3-0-0 oc purlins.
BOT CHORD Rigid ceiling directly applied or 10-0-0 oc bracing.

REACTIONS (lb/size) 3=54/Mechanical, 2=218/0-3-8, 4=42/Mechanical
Max Horz 2=109(load case 5)
Max Uplift3=-50(load case 5), 2=-214(load case 5), 4=-33(load case 3)

FORCES (lb) - Maximum Compression/Maximum Tension
TOP CHORD 1-2=0/27, 2-3=-58/16
BOT CHORD 2-4=0/0

NOTES
1) Wind: ASCE 7-98; 120mph (3-second gust); h=20ft; TCDL=4.2psf; BCDL=3.0psf; Category II; Exp B; enclosed; MWFRS gable end zone and C-C Exterior(2) zone; porch left and right exposed; Lumber DOL=1.60 plate grip DOL=1.60. This truss is designed for C-C for members and forces, and for MWFRS for reactions specified.
2) Refer to girder(s) for truss to truss connections.
3) Provide mechanical connection (by others) of truss to bearing plate capable of withstanding 50 lb uplift at joint 3, 214 lb uplift at joint 2 and 33 lb uplift at joint 4.

LOAD CASE(S) Standard

NOVEMBER 14,2005 TRUSS DESIGN ENGINEER:
THOMAS E. MILLER PE 56877, BYRON K. ANDERSON PE 60987
STRUCTURAL ENGINEERING AND INSPECTIONS, INC. EB 9196
16105 N. FLORIDA AVE. STE B, LUTZ, FL 33549

Job	Truss	Truss Type	Qty	Ply	Dwg.#1114051608
L132306	CJ5	MONO TRUSS	4	1	Job Reference (optional)

Builders FirstSource, Lake City, Fl 32055 — 6.200 s Jul 13 2005 MiTek Industries, Inc. Tue Sep 27 15:52:45 2005 Page 1

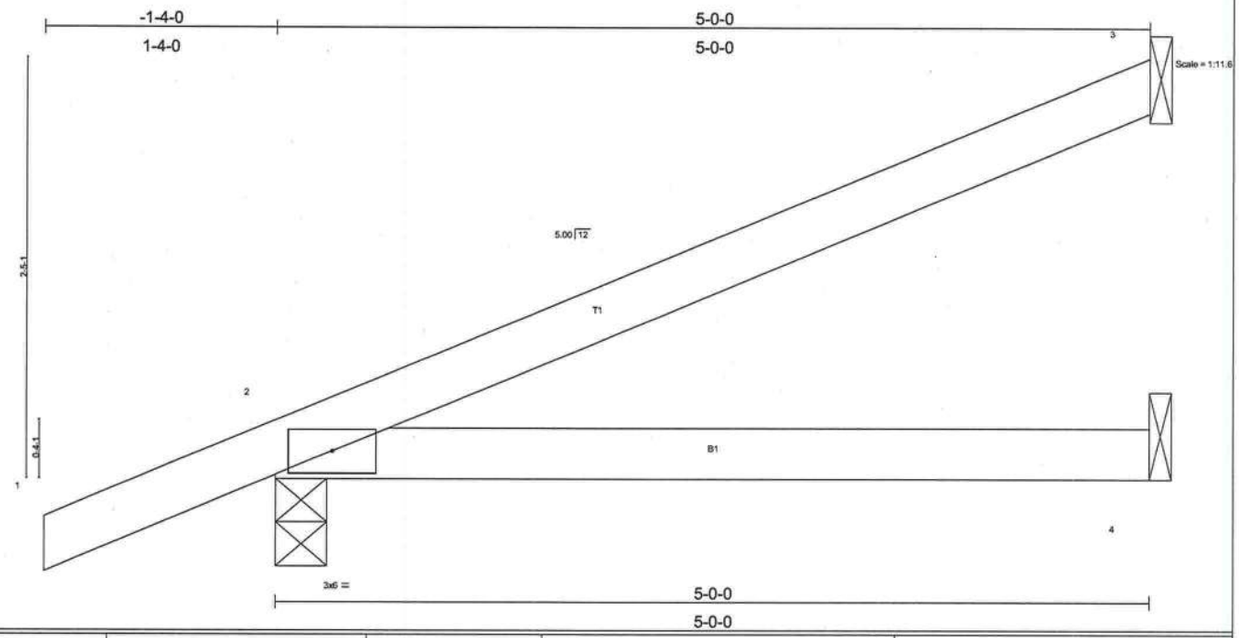

LOADING (psf)		SPACING 2-0-0		CSI		DEFL	in	(loc)	l/defl	L/d	PLATES	GRIP
TCLL	20.0	Plates Increase	1.25	TC	0.34	Vert(LL)	0.10	2-4	>592	240	MT20	244/190
TCDL	7.0	Lumber Increase	1.25	BC	0.26	Vert(TL)	0.09	2-4	>673	180		
BCLL	10.0	Rep Stress Incr	YES	WB	0.00	Horz(TL)	-0.00	3	n/a	n/a		
BCDL	5.0	Code FBC2001/TPI2002		(Matrix)							Weight: 18 lb	

LUMBER
TOP CHORD 2 X 4 SYP No.2D
BOT CHORD 2 X 4 SYP No.2D

BRACING
TOP CHORD Structural wood sheathing directly applied or 5-0-0 oc purlins.
BOT CHORD Rigid ceiling directly applied or 10-0-0 oc bracing.

REACTIONS (lb/size) 3=117/Mechanical, 2=293/0-3-8, 4=72/Mechanical
Max Horz 2=155(load case 5)
Max Uplift3=-119(load case 5), 2=-262(load case 5), 4=-57(load case 3)

FORCES (lb) - Maximum Compression/Maximum Tension
TOP CHORD 1-2=0/27, 2-3=-113/36
BOT CHORD 2-4=0/0

NOTES
1) Wind: ASCE 7-98; 120mph (3-second gust); h=20ft; TCDL=4.2psf; BCDL=3.0psf; Category II; Exp B; enclosed; MWFRS gable end zone and C-C Exterior(2) zone; porch left and right exposed; Lumber DOL=1.60 plate grip DOL=1.60. This truss is designed for C-C for members and forces, and for MWFRS for reactions specified.
2) Refer to girder(s) for truss to truss connections.
3) Provide mechanical connection (by others) of truss to bearing plate capable of withstanding 119 lb uplift at joint 3, 262 lb uplift at joint 2 and 57 lb uplift at joint 4.

LOAD CASE(S) Standard

NOVEMBER 14,2005 TRUSS DESIGN ENGINEER:
THOMAS E. MILLER PE 56877, BYRON K. ANDERSON PE 60987
STRUCTURAL ENGINEERING AND INSPECTIONS, INC. EB 9196
16105 N. FLORIDA AVE. STE B, LUTZ, FL 33549

Job	Truss	Truss Type	Qty	Ply	Dwg.#1114051609
L132306	EJ7	MONO TRUSS	28	1	Job Reference (optional)

Builders FirstSource, Lake City, Fl 32055

6.200 s Jul 13 2005 MiTek Industries, Inc. Tue Sep 27 15:52:46 2005 Page 1

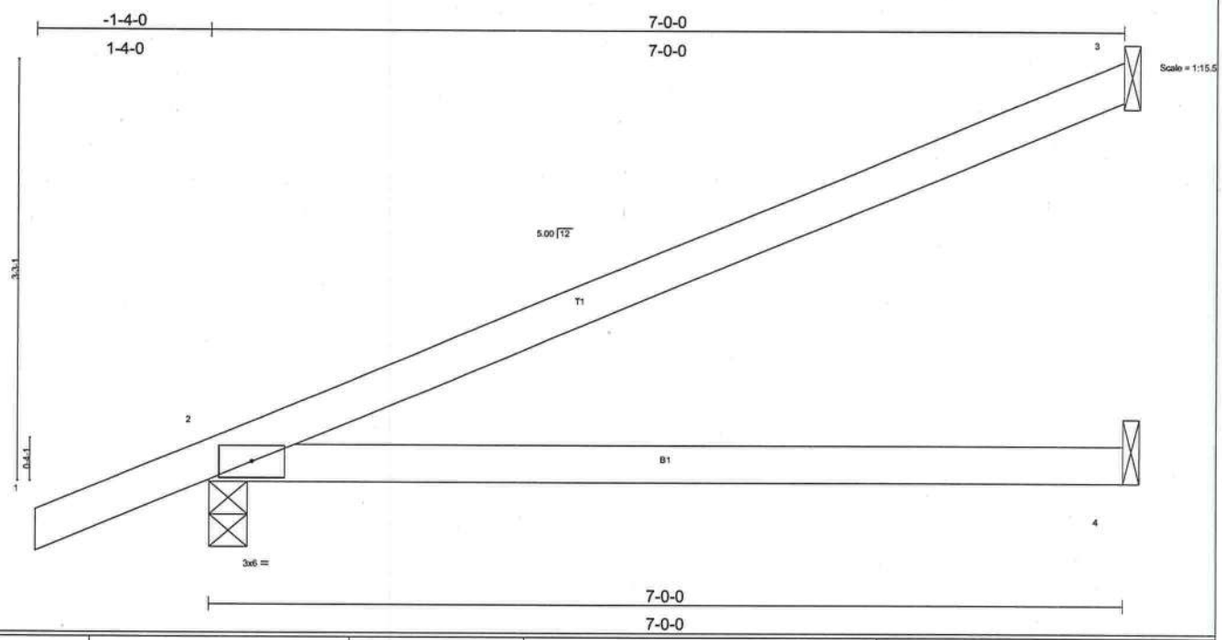

LOADING (psf)		SPACING	2-0-0	CSI		DEFL	in	(loc)	l/defl	L/d	PLATES	GRIP
TCLL	20.0	Plates Increase	1.25	TC	0.35	Vert(LL)	0.31	2-4	>259	240	MT20	244/190
TCDL	7.0	Lumber Increase	1.25	BC	0.38	Vert(TL)	0.27	2-4	>305	180		
BCLL	10.0	Rep Stress Incr	YES	WB	0.00	Horz(TL)	-0.00	3	n/a	n/a		
BCDL	5.0	Code FBC2001/TPI2002		(Matrix)							Weight: 24 lb	

LUMBER
TOP CHORD 2 X 4 SYP No.1D
BOT CHORD 2 X 4 SYP No.1D

BRACING
TOP CHORD Structural wood sheathing directly applied or 6-0-0 oc purlins.
BOT CHORD Rigid ceiling directly applied or 10-0-0 oc bracing.

REACTIONS (lb/size) 3=168/Mechanical, 2=374/0-3-8, 4=109/Mechanical
Max Horz 2=201(load case 5)
Max Uplift3=-171(load case 5), 2=-318(load case 5), 4=-90(load case 5)

FORCES (lb) - Maximum Compression/Maximum Tension
TOP CHORD 1-2=0/27, 2-3=-90/52
BOT CHORD 2-4=0/0

NOTES
1) Wind: ASCE 7-98; 120mph (3-second gust); h=20ft; TCDL=4.2psf; BCDL=3.0psf; Category II; Exp B; enclosed; MWFRS gable end zone and C-C Interior(1) zone; porch left and right exposed; Lumber DOL=1.60 plate grip DOL=1.60. This truss is designed for C-C for members and forces, and for MWFRS for reactions specified.
2) Refer to girder(s) for truss to truss connections.
3) Provide mechanical connection (by others) of truss to bearing plate capable of withstanding 171 lb uplift at joint 3, 318 lb uplift at joint 2 and 90 lb uplift at joint 4.

LOAD CASE(S) Standard

NOVEMBER 14,2005 TRUSS DESIGN ENGINEER:
THOMAS E. MILLER PE 56877, BYRON K. ANDERSON PE 60987
STRUCTURAL ENGINEERING AND INSPECTIONS, INC. EB 9196
16105 N. FLORIDA AVE. STE B, LUTZ, FL 33549

Job	Truss	Truss Type	Qty	Ply	Dwg.#1114051610
L132306	EJ7A	MONO HIP	2	1	Job Reference (optional)

Builders FirstSource, Lake City, Fl 32055 — 6.200 s Jul 13 2005 MiTek Industries, Inc. Tue Sep 27 15:52:47 2005 Page 1

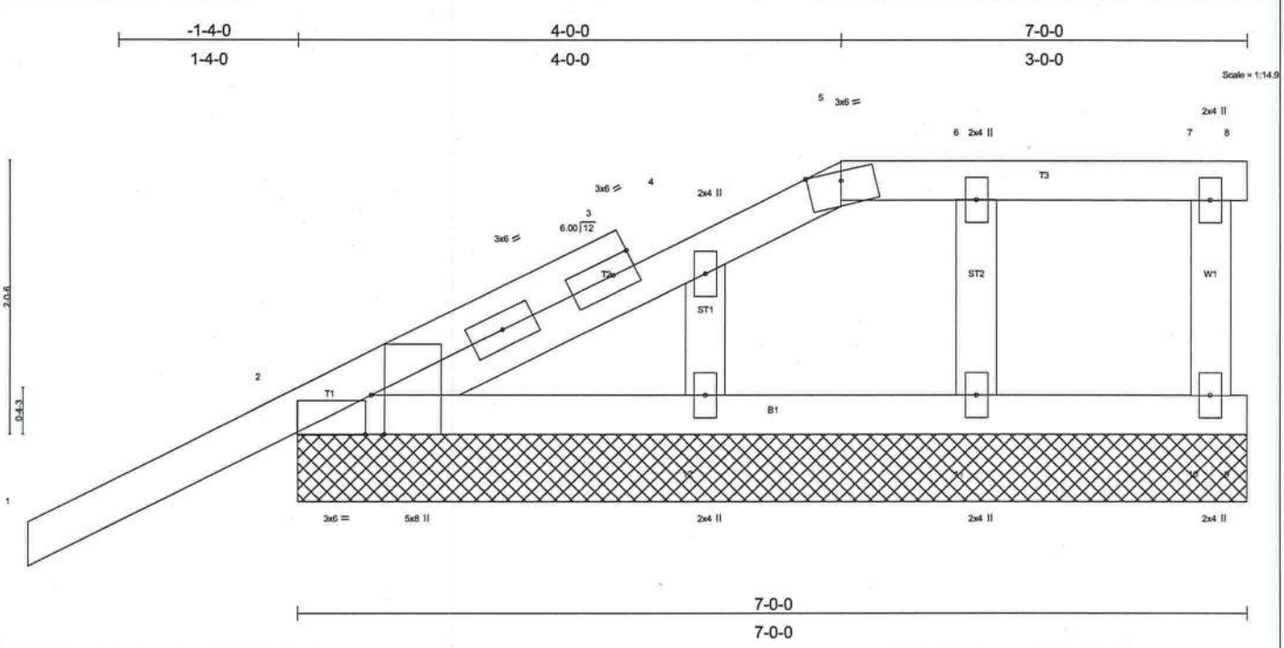

Plate Offsets (X,Y): [2:0-3-8,Edge], [2:0-0-8,Edge]

LOADING (psf)		SPACING 2-0-0		CSI		DEFL in (loc) l/defl L/d		PLATES GRIP
TCLL	20.0	Plates Increase	1.25	TC	0.41	Vert(LL) -0.01 1 n/r 90		MT20 244/190
TCDL	7.0	Lumber Increase	1.25	BC	0.05	Vert(TL) -0.03 1 n/r 80		
BCLL	10.0	Rep Stress Incr	NO	WB	0.06	Horz(TL) -0.00 8 n/a n/a		
BCDL	5.0	Code FBC2001/TPI2002		(Matrix)				Weight: 34 lb

LUMBER
TOP CHORD 2 X 4 SYP No.2D
BOT CHORD 2 X 4 SYP No.2D
WEBS 2 X 4 SYP No.3
OTHERS 2 X 4 SYP No.3

BRACING
TOP CHORD Structural wood sheathing directly applied or 6-0-0 oc purlins.
BOT CHORD Rigid ceiling directly applied or 10-0-0 oc bracing.

REACTIONS (lb/size) 2=395/7-0-0, 8=-18/7-0-0, 9=-19/7-0-0, 11=231/7-0-0, 12=248/7-0-0, 10=156/7-0-0
Max Horz 2=169(load case 5)
Max Uplift2=-297(load case 5), 8=-20(load case 8), 9=-20(load case 8), 11=-120(load case 3), 12=-78(load case 5), 10=-63(load case 4)
Max Grav 2=395(load case 1), 8=13(load case 4), 11=231(load case 1), 12=248(load case 1), 10=162(load case 8)

FORCES (lb) - Maximum Compression/Maximum Tension
TOP CHORD 1-2=-20/75, 2-3=-80/0, 3-4=-108/42, 4-5=-39/4, 5-6=-1/0, 6-7=0/0, 7-8=0/0
BOT CHORD 2-12=0/0, 11-12=0/0, 10-11=0/0, 9-10=0/0
WEBS 6-11=-176/223, 4-12=-179/245, 7-10=-108/116

NOTES
1) Unbalanced roof live loads have been considered for this design.
2) Wind: ASCE 7-98; 120mph (3-second gust); h=20ft; TCDL=4.2psf; BCDL=3.0psf; Category II; Exp B; enclosed; MWFRS gable end zone and C-C Exterior(2) zone; Lumber DOL=1.60 plate grip DOL=1.60. This truss is designed for C-C for members and forces, and for MWFRS for reactions specified.
3) Truss designed for wind loads in the plane of the truss only. For studs exposed to wind (normal to the face), see MiTek "Standard Gable End Detail"
4) Provide adequate drainage to prevent water ponding.
5) Gable requires continuous bottom chord bearing.
6) Gable studs spaced at 2-0-0 oc.
7) Provide mechanical connection (by others) of truss to bearing plate capable of withstanding 297 lb uplift at joint 2, 20 lb uplift at joint 8, 20 lb uplift at joint 9, 120 lb uplift at joint 11, 78 lb uplift at joint 12 and 63 lb uplift at joint 10.
8) In the LOAD CASE(S) section, loads applied to the face of the truss are noted as front (F) or back (B).

LOAD CASE(S) Standard
1) Regular: Lumber Increase=1.25, Plate Increase=1.25
Uniform Loads (plf)
Vert: 1-5=-87(F=-33), 5-8=-87(F=-33), 2-9=-30

NOVEMBER 14,2005 TRUSS DESIGN ENGINEER:
THOMAS E. MILLER PE 56877, BYRON K. ANDERSON PE 60987
STRUCTURAL ENGINEERING AND INSPECTIONS, INC. EB 9196
16105 N. FLORIDA AVE. STE B, LUTZ, FL 33549

Job	Truss	Truss Type	Qty	Ply	Dwg.#1114051611
L132306	EJ7B	MONO HIP	2	1	Job Reference (optional)

Builders FirstSource, Lake City, Fl 32055 — 6.200 s Jul 13 2005 MiTek Industries, Inc. Tue Sep 27 15:52:47 2005 Page 1

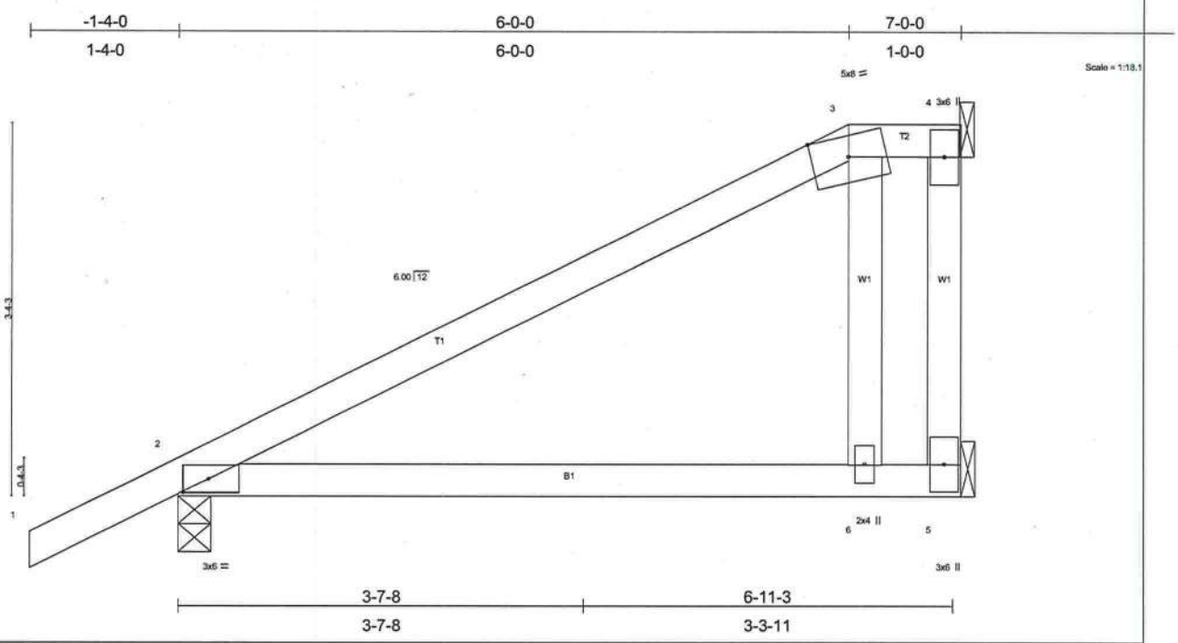

Plate Offsets (X,Y): [2:0-2-12,0-1-8]

LOADING (psf)		SPACING	2-0-0	CSI		DEFL	in	(loc)	l/defl	L/d	PLATES	GRIP
TCLL	20.0	Plates Increase	1.25	TC	0.65	Vert(LL)	0.09	2-6	>926	240	MT20	244/190
TCDL	7.0	Lumber Increase	1.25	BC	0.31	Vert(TL)	-0.11	2-6	>758	180		
BCLL	10.0	Rep Stress Incr	YES	WB	0.09	Horz(TL)	-0.01	4	n/a	n/a		
BCDL	5.0	Code FBC2001/TPI2002		(Matrix)							Weight: 33 lb	

LUMBER
TOP CHORD 2 X 4 SYP No.2D
BOT CHORD 2 X 4 SYP No.2D
WEBS 2 X 4 SYP No.3

BRACING
TOP CHORD Structural wood sheathing directly applied or 6-0-0 oc purlins, except end verticals.
BOT CHORD Rigid ceiling directly applied or 10-0-0 oc bracing.

REACTIONS (lb/size) 5=201/Mechanical, 2=370/0-3-8, 4=72/Mechanical
Max Horz 2=216(load case 5)
Max Uplift5=-192(load case 5), 2=-211(load case 5)

FORCES (lb) - Maximum Compression/Maximum Tension
TOP CHORD 1-2=0/31, 2-3=-194/3, 3-4=-107/119, 4-5=0/0
BOT CHORD 2-6=-136/111, 5-6=-118/107
WEBS 3-6=-82/372

NOTES
1) Wind: ASCE 7-98; 120mph (3-second gust); h=20ft; TCDL=4.2psf; BCDL=3.0psf; Category II; Exp B; enclosed; MWFRS gable end zone and C-C Exterior(2) zone; Lumber DOL=1.60 plate grip DOL=1.60. This truss is designed for C-C for members and forces, and for MWFRS for reactions specified.
2) Provide adequate drainage to prevent water ponding.
3) Refer to girder(s) for truss to truss connections.
4) Provide mechanical connection (by others) of truss to bearing plate capable of withstanding 192 lb uplift at joint 5 and 211 lb uplift at joint 2.
5) Gap between inside of top chord bearing and first diagonal or vertical web shall not exceed 0.500in.

LOAD CASE(S) Standard

NOVEMBER 14,2005 TRUSS DESIGN ENGINEER:
THOMAS E. MILLER PE 56877, BYRON K. ANDERSON PE 60987
STRUCTURAL ENGINEERING AND INSPECTIONS, INC. EB 9196
16105 N. FLORIDA AVE. STE B, LUTZ, FL 33549

Job	Truss	Truss Type	Qty	Ply	Dwg.#1114051612
L132306	EJ7C	SPECIAL	5	1	Job Reference (optional)

Builders FirstSource, Lake City, Fl 32055 — 6.200 s Jul 13 2005 MiTek Industries, Inc. Tue Sep 27 15:52:48 2005 Page 1

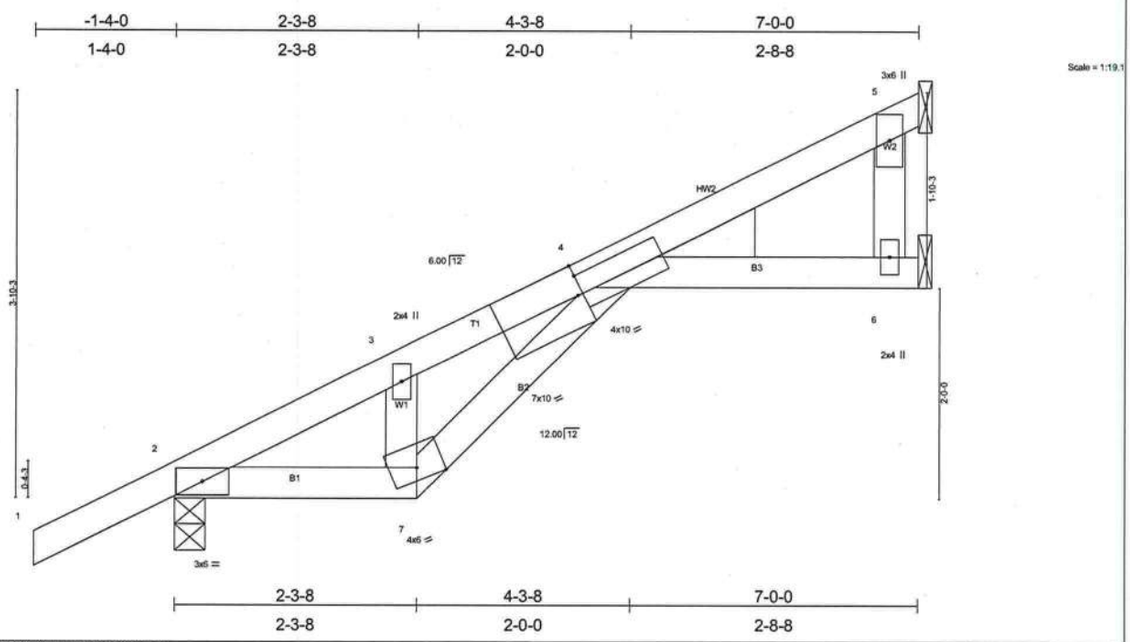

Plate Offsets (X,Y): [4:0-0-9,Edge], [4:0-0-9,0-2-3]

LOADING (psf)		SPACING	2-0-0	CSI		DEFL	in	(loc)	l/defl	L/d	PLATES	GRIP
TCLL	20.0	Plates Increase	1.25	TC	0.38	Vert(LL)	0.17	4	>452	240	MT20	244/190
TCDL	7.0	Lumber Increase	1.25	BC	0.43	Vert(TL)	-0.15	4	>544	180		
BCLL	10.0	Rep Stress Incr	YES	WB	0.09	Horz(TL)	-0.09	6	n/a	n/a		
BCDL	5.0	Code FBC2001/TPI2002		(Matrix)							Weight: 31 lb	

LUMBER
TOP CHORD 2 X 4 SYP No.2D
BOT CHORD 2 X 4 SYP No.2D
WEBS 2 X 4 SYP No.3
WEDGE
Right: 2 X 6 SYP No.1D

BRACING
TOP CHORD Structural wood sheathing directly applied or 6-0-0 oc purlins.
BOT CHORD Rigid ceiling directly applied or 7-10-10 oc bracing.

REACTIONS (lb/size) 2=365/0-3-8, 5=141/Mechanical, 6=126/Mechanical
Max Horz 2=235(load case 5)
Max Uplift2=-200(load case 5), 5=-116(load case 5), 6=-52(load case 5)

FORCES (lb) - Maximum Compression/Maximum Tension
TOP CHORD 1-2=0/31, 2-3=-475/254, 3-4=-498/381, 4-5=-106/56
BOT CHORD 2-7=-483/396, 4-7=-552/479, 4-6=0/0
WEBS 3-7=-227/358, 5-6=0/0

NOTES
1) Wind: ASCE 7-98; 120mph (3-second gust); h=20ft; TCDL=4.2psf; BCDL=3.0psf; Category II; Exp B; enclosed; MWFRS gable end zone and C-C Exterior(2) zone; Lumber DOL=1.60 plate grip DOL=1.60. This truss is designed for C-C for members and forces, and for MWFRS for reactions specified.
2) Refer to girder(s) for truss to truss connections.
3) Provide mechanical connection (by others) of truss to bearing plate capable of withstanding 200 lb uplift at joint 2, 116 lb uplift at joint 5 and 52 lb uplift at joint 6.
4) Gap between inside of top chord bearing and first diagonal or vertical web shall not exceed 0.500in.

LOAD CASE(S) Standard

NOVEMBER 14,2005 TRUSS DESIGN ENGINEER:
THOMAS E. MILLER PE 56877, BYRON K. ANDERSON PE 60987
STRUCTURAL ENGINEERING AND INSPECTIONS, INC. EB 9196
16105 N. FLORIDA AVE. STE B, LUTZ, FL 33549

Job	Truss	Truss Type	Qty	Ply	Dwg.#1114051613
L132306	HJ7	MONO TRUSS	2	1	Job Reference (optional)

Builders FirstSource, Lake City, Fl 32055 — 6.200 s Jul 13 2005 MiTek Industries, Inc. Tue Sep 27 15:52:49 2005 Page 1

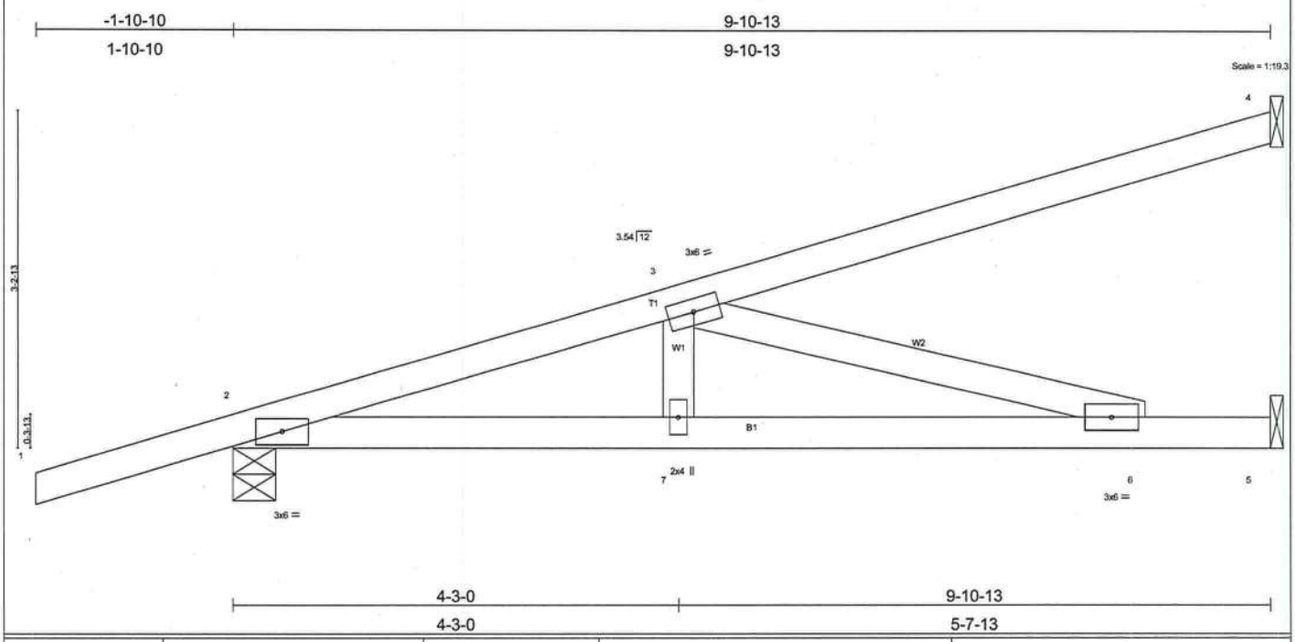

LOADING (psf)		SPACING 2-0-0		CSI		DEFL	in	(loc)	l/defl	L/d	PLATES	GRIP
TCLL	20.0	Plates Increase	1.25	TC	0.57	Vert(LL)	0.21	6-7	>547	240	MT20	244/190
TCDL	7.0	Lumber Increase	1.25	BC	0.89	Vert(TL)	-0.30	6-7	>387	180		
BCLL	10.0	Rep Stress Incr	NO	WB	0.45	Horz(TL)	0.01	5	n/a	n/a		
BCDL	5.0	Code FBC2001/TPI2002		(Matrix)							Weight: 41 lb	

LUMBER
TOP CHORD 2 X 4 SYP No.2D
BOT CHORD 2 X 4 SYP No.2D
WEBS 2 X 4 SYP No.3

BRACING
TOP CHORD Structural wood sheathing directly applied or 5-10-15 oc purlins.
BOT CHORD Rigid ceiling directly applied or 6-2-11 oc bracing.

REACTIONS (lb/size) 4=277/Mechanical, 2=468/0-4-15, 5=383/Mechanical
Max Horz 2=244(load case 2)
Max Uplift4=-272(load case 2), 2=-428(load case 2), 5=-237(load case 2)

FORCES (lb) - Maximum Compression/Maximum Tension
TOP CHORD 1-2=0/28, 2-3=-1103/709, 3-4=-100/58
BOT CHORD 2-7=-872/1045, 6-7=-872/1045, 5-6=0/0
WEBS 3-7=-165/270, 3-6=-1087/906

NOTES
1) Wind: ASCE 7-98; 120mph (3-second gust); h=20ft; TCDL=4.2psf; BCDL=3.0psf; Category II; Exp B; enclosed; MWFRS gable end zone; porch left and right exposed; Lumber DOL=1.60 plate grip DOL=1.60.
2) Refer to girder(s) for truss to truss connections.
3) Provide mechanical connection (by others) of truss to bearing plate capable of withstanding 272 lb uplift at joint 4, 428 lb uplift at joint 2 and 237 lb uplift at joint 5.
4) In the LOAD CASE(S) section, loads applied to the face of the truss are noted as front (F) or back (B).

LOAD CASE(S) Standard
1) Regular: Lumber Increase=1.25, Plate Increase=1.25
Uniform Loads (plf)
Vert: 1-2=-54
Trapezoidal Loads (plf)
Vert: 2=-3(F=26, B=26)-to-4=-134(F=-40, B=-40), 2=-0(F=15, B=15)-to-5=-74(F=-22, B=-22)

NOVEMBER 14,2005 TRUSS DESIGN ENGINEER:
THOMAS E. MILLER PE 56877, BYRON K. ANDERSON PE 60987
STRUCTURAL ENGINEERING AND INSPECTIONS, INC. EB 9196
16105 N. FLORIDA AVE. STE B, LUTZ, FL 33549

Job	Truss	Truss Type	Qty	Ply	Dwg.#1114051614
L132306	T01	COMMON	13	1	Job Reference (optional)

Builders FirstSource, Lake City, Fl 32055 — 6.200 s Jul 13 2005 MiTek Industries, Inc. Tue Sep 27 15:52:50 2005 Page 1

-1-4-0	5-9-4	11-0-0	16-2-12	22-0-0	23-4-0
1-4-0	5-9-4	5-2-12	5-2-12	5-9-4	1-4-0

Scale = 1:40.5

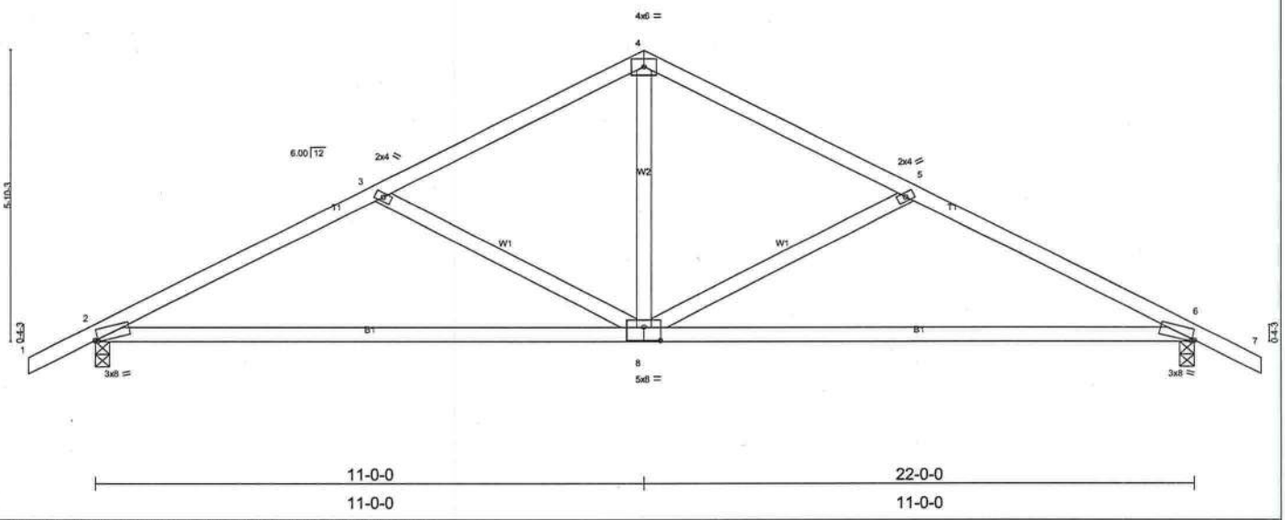

11-0-0	22-0-0
11-0-0	11-0-0

Plate Offsets (X,Y): [2:0-0-10,Edge], [6:0-0-10,Edge], [8:0-4-0,0-3-4]

LOADING (psf)		SPACING	2-0-0	CSI		DEFL	in	(loc)	l/defl	L/d	PLATES	GRIP
TCLL	20.0	Plates Increase	1.25	TC	0.33	Vert(LL)	-0.25	2-8	>999	240	MT20	244/190
TCDL	7.0	Lumber Increase	1.25	BC	0.63	Vert(TL)	-0.43	2-8	>602	180		
BCLL	10.0	Rep Stress Incr	YES	WB	0.25	Horz(TL)	0.04	6	n/a	n/a		
BCDL	5.0	Code FBC2001/TPI2002		(Matrix)							Weight: 99 lb	

LUMBER
TOP CHORD 2 X 4 SYP No.2D
BOT CHORD 2 X 4 SYP No.2D
WEBS 2 X 4 SYP No.3

BRACING
TOP CHORD Structural wood sheathing directly applied or 4-9-14 oc purlins.
BOT CHORD Rigid ceiling directly applied or 7-7-1 oc bracing.

REACTIONS (lb/size) 2=992/0-3-8, 6=992/0-3-8
Max Horz 2=-165(load case 6)
Max Uplift2=-463(load case 5), 6=-463(load case 6)

FORCES (lb) - Maximum Compression/Maximum Tension
TOP CHORD 1-2=0/31, 2-3=-1481/1014, 3-4=-1152/777, 4-5=-1152/777, 5-6=-1481/1014, 6-7=0/31
BOT CHORD 2-8=-730/1285, 6-8=-730/1285
WEBS 3-8=-381/447, 4-8=-354/701, 5-8=-381/447

NOTES
1) Unbalanced roof live loads have been considered for this design.
2) Wind: ASCE 7-98; 120mph (3-second gust); h=20ft; TCDL=4.2psf; BCDL=3.0psf; Category II; Exp B; enclosed; MWFRS gable end zone and C-C Exterior(2) zone; Lumber DOL=1.60 plate grip DOL=1.60. This truss is designed for C-C for members and forces, and for MWFRS for reactions specified.
3) Provide mechanical connection (by others) of truss to bearing plate capable of withstanding 463 lb uplift at joint 2 and 463 lb uplift at joint 6.

LOAD CASE(S) Standard

NOVEMBER 14,2005 TRUSS DESIGN ENGINEER:
THOMAS E. MILLER PE 56877, BYRON K. ANDERSON PE 60987
STRUCTURAL ENGINEERING AND INSPECTIONS, INC. EB 9196
16105 N. FLORIDA AVE. STE B, LUTZ, FL 33549

Job	Truss	Truss Type	Qty	Ply	Dwg.#1114051615
L132306	T01G	COMMON	1	1	Job Reference (optional)

Builders FirstSource, Lake City, Fl 32055 — 6.200 s Jul 13 2005 MiTek Industries, Inc. Tue Sep 27 15:52:50 2005 Page 1

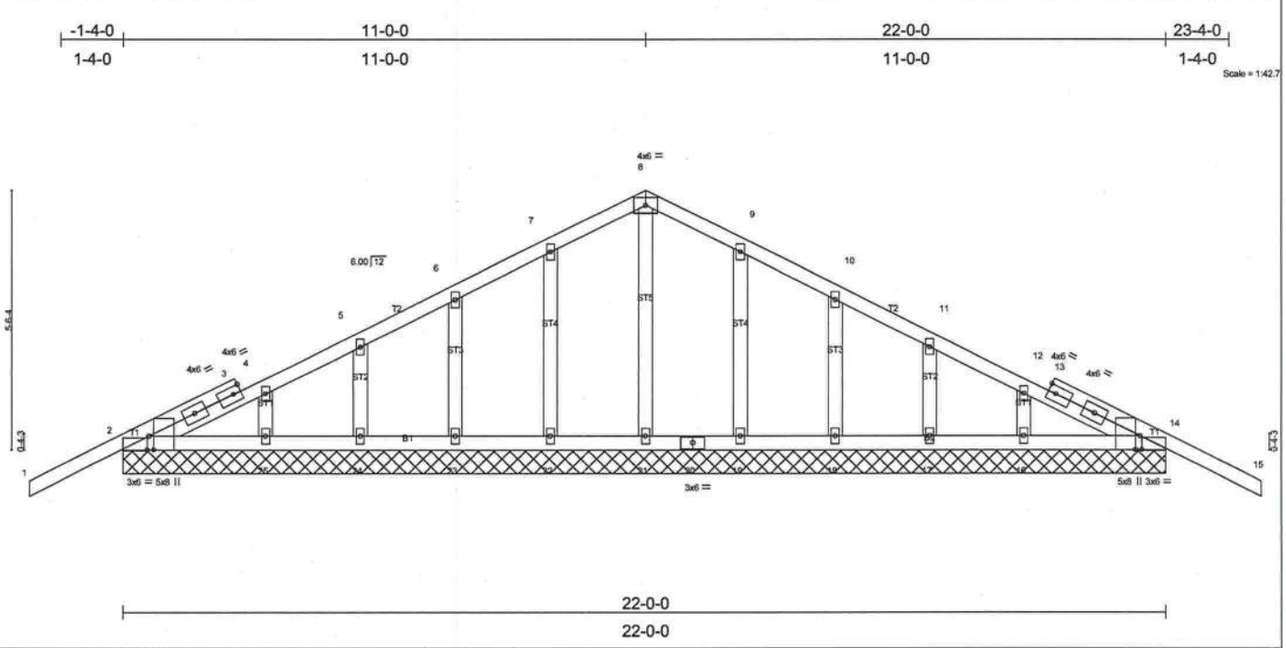

Plate Offsets (X,Y): [2:0-3-8,Edge], [2:0-0-8,Edge], [14:0-3-8,Edge], [14:0-0-8,Edge]

LOADING (psf)		SPACING 2-0-0		CSI		DEFL	in	(loc)	l/defl	L/d	PLATES	GRIP
TCLL	20.0	Plates Increase	1.25	TC	0.38	Vert(LL)	-0.03	15	n/r	90	MT20	244/190
TCDL	7.0	Lumber Increase	1.25	BC	0.06	Vert(TL)	-0.05	15	n/r	80		
BCLL	10.0	Rep Stress Incr	NO	WB	0.08	Horz(TL)	0.00	14	n/a	n/a		
BCDL	5.0	Code FBC2001/TPI2002		(Matrix)							Weight: 119 lb	

LUMBER
TOP CHORD 2 X 4 SYP No.2D
BOT CHORD 2 X 4 SYP No.2D
OTHERS 2 X 4 SYP No.3

BRACING
TOP CHORD Structural wood sheathing directly applied or 6-0-0 oc purlins.
BOT CHORD Rigid ceiling directly applied or 10-0-0 oc bracing.

REACTIONS (lb/size) 2=402/22-0-0, 14=402/22-0-0, 21=216/22-0-0, 22=234/22-0-0, 23=234/22-0-0, 24=234/22-0-0, 25=249/22-0-0, 19=234/22-0-0, 18=234/22-0-0, 17=234/22-0-0, 16=249/22-0-0
Max Horz 2=175(load case 5)
Max Uplift2=-275(load case 5), 14=-303(load case 6), 22=-138(load case 5), 23=-138(load case 5), 24=-157(load case 5), 25=-81(load case 6), 19=-135(load case 6), 18=-139(load case 6), 17=-156(load case 6), 16=-86(load case 6)
Max Grav 2=402(load case 1), 14=402(load case 1), 21=216(load case 1), 22=238(load case 7), 23=234(load case 1), 24=234(load case 7), 25=249(load case 1), 19=238(load case 8), 18=234(load case 1), 17=234(load case 8), 16=249(load case 1)

FORCES (lb) - Maximum Compression/Maximum Tension
TOP CHORD 1-2=-11/75, 2-3=-100/81, 3-4=-109/72, 4-5=-66/116, 5-6=-60/150, 6-7=-59/214, 7-8=-59/285, 8-9=-59/285, 9-10=-59/214, 10-11=-60/135, 11-12=-59/53, 12-13=-37/27, 13-14=-80/20, 14-15=-11/75
BOT CHORD 2-25=0/166, 24-25=0/166, 23-24=0/166, 22-23=0/166, 21-22=0/166, 20-21=0/166, 19-20=0/166, 18-19=0/166, 17-18=0/166, 16-17=0/166, 14-16=0/166
WEBS 8-21=-156/0, 7-22=-178/187, 6-23=-174/203, 5-24=-176/209, 4-25=-181/162, 9-19=-178/187, 10-18=-174/203, 11-17=-176/209, 12-16=-181/162

NOTES
1) Unbalanced roof live loads have been considered for this design.
2) Wind: ASCE 7-98; 120mph (3-second gust); h=20ft; TCDL=4.2psf; BCDL=3.0psf; Category II; Exp B; enclosed; MWFRS gable end zone and C-C Exterior(2) zone; Lumber DOL=1.60 plate grip DOL=1.60. This truss is designed for C-C for members and forces, and for MWFRS for reactions specified.
3) Truss designed for wind loads in the plane of the truss only. For studs exposed to wind (normal to the face), see MiTek "Standard Gable End Detail"
4) All plates are 2x4 MT20 unless otherwise indicated.
5) Gable requires continuous bottom chord bearing.
6) Gable studs spaced at 2-0-0 oc.
7) Provide mechanical connection (by others) of truss to bearing plate capable of withstanding 275 lb uplift at joint 2, 303 lb uplift at joint 14, 138 lb uplift at joint 22, 138 lb uplift at joint 23, 157 lb uplift at joint 24, 81 lb uplift at joint 25, 135 lb uplift at joint 19, 139 lb uplift at joint 18, 156 lb uplift at joint 17 and 86 lb uplift at joint 16.
8) In the LOAD CASE(S) section, loads applied to the face of the truss are noted as front (F) or back (B).

LOAD CASE(S) Standard
1) Regular: Lumber Increase=1.25, Plate Increase=1.25
Uniform Loads (plf)
Vert: 1-8=-87(F=-33), 8-15=-87(F=-33), 2-14=-30

NOVEMBER 14,2005 TRUSS DESIGN ENGINEER:
THOMAS E. MILLER PE 56877, BYRON K. ANDERSON PE 60987
STRUCTURAL ENGINEERING AND INSPECTIONS, INC. EB 9196
16105 N. FLORIDA AVE. STE B, LUTZ, FL 33549

Job	Truss	Truss Type	Qty	Ply	Dwg.#1114051616
L132306	T02	COMMON	3	1	Job Reference (optional)

Builders FirstSource, Lake City, Fl 32055 — 6.200 s Jul 13 2005 MiTek Industries, Inc. Tue Sep 27 15:52:51 2005 Page 1

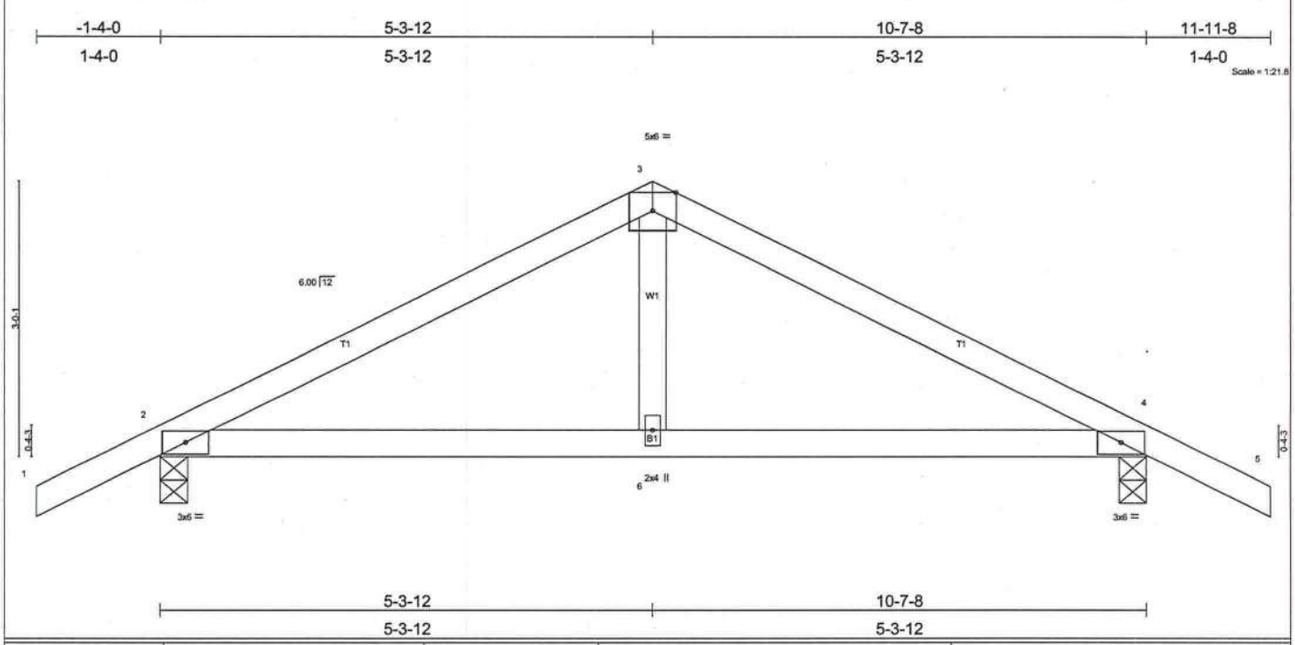

LOADING (psf)		SPACING	2-0-0	CSI		DEFL	in	(loc)	l/defl	L/d	PLATES	GRIP
TCLL	20.0	Plates Increase	1.25	TC	0.35	Vert(LL)	0.07	2-6	>999	240	MT20	244/190
TCDL	7.0	Lumber Increase	1.25	BC	0.20	Vert(TL)	0.06	2-6	>999	180		
BCLL	10.0	Rep Stress Incr	YES	WB	0.07	Horz(TL)	-0.01	4	n/a	n/a		
BCDL	5.0	Code FBC2001/TPI2002		(Matrix)							Weight: 42 lb	

LUMBER
TOP CHORD 2 X 4 SYP No.2D
BOT CHORD 2 X 4 SYP No.2D
WEBS 2 X 4 SYP No.3

BRACING
TOP CHORD Structural wood sheathing directly applied or 6-0-0 oc purlins.
BOT CHORD Rigid ceiling directly applied or 7-9-15 oc bracing.

REACTIONS (lb/size) 2=514/0-3-8, 4=514/0-3-8
Max Horz 2=-98(load case 6)
Max Uplift2=-432(load case 5), 4=-432(load case 6)

FORCES (lb) - Maximum Compression/Maximum Tension
TOP CHORD 1-2=0/31, 2-3=-599/921, 3-4=-599/921, 4-5=0/31
BOT CHORD 2-6=-650/481, 4-6=-650/481
WEBS 3-6=-410/190

NOTES
1) Unbalanced roof live loads have been considered for this design.
2) Wind: ASCE 7-98; 120mph (3-second gust); h=20ft; TCDL=4.2psf; BCDL=3.0psf; Category II; Exp B; enclosed; MWFRS gable end zone and C-C Exterior(2) zone; porch left and right exposed; Lumber DOL=1.60 plate grip DOL=1.60. This truss is designed for C-C for members and forces, and for MWFRS for reactions specified.
3) Provide mechanical connection (by others) of truss to bearing plate capable of withstanding 432 lb uplift at joint 2 and 432 lb uplift at joint 4.

LOAD CASE(S) Standard

NOVEMBER 14,2005 TRUSS DESIGN ENGINEER:
THOMAS E. MILLER PE 56877, BYRON K. ANDERSON PE 60987
STRUCTURAL ENGINEERING AND INSPECTIONS, INC. EB 9196
16105 N. FLORIDA AVE. STE B, LUTZ, FL 33549

Job	Truss	Truss Type	Qty	Ply	Dwg.#1114051617
L132306	T02G	COMMON	1	1	Job Reference (optional)

Builders FirstSource, Lake City, Fl 32055

6.200 s Jul 13 2005 MiTek Industries, Inc. Tue Sep 27 15:52:52 2005 Page 1

-1-4-0 | 5-3-12 | 10-7-8 | 11-11-8

1-4-0 | 5-3-12 | 5-3-12 | 1-4-0

Scale: 1/2"=1'

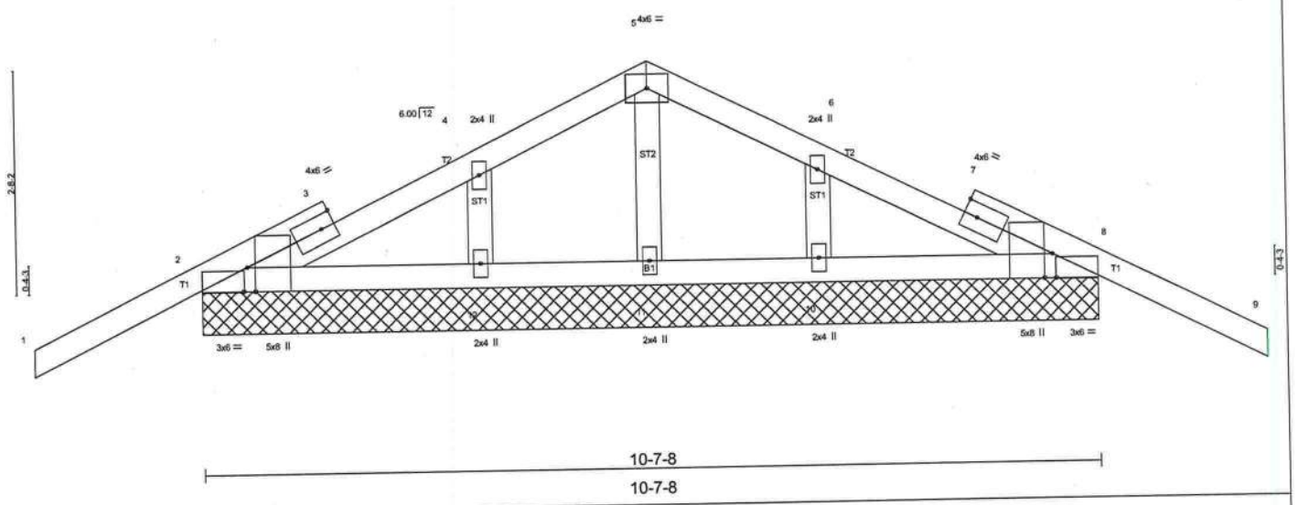

Plate Offsets (X,Y): [2:0-3-8,Edge], [2:0-0-8,Edge], [8:0-3-8,Edge], [8:0-0-8,Edge]

LOADING (psf)		SPACING	2-0-0	CSI		DEFL	in	(loc)	l/defl	L/d	PLATES	GRIP
TCLL	20.0	Plates Increase	1.25	TC	0.40	Vert(LL)	-0.03	9	n/r	90	MT20	244/190
TCDL	7.0	Lumber Increase	1.25	BC	0.04	Vert(TL)	-0.04	9	n/r	80		
BCLL	10.0	Rep Stress Incr	NO	WB	0.06	Horz(TL)	0.00	8	n/a	n/a		
BCDL	5.0	Code FBC2001/TPI2002		(Matrix)							Weight: 50 lb	

LUMBER
TOP CHORD 2 X 4 SYP No.2D
BOT CHORD 2 X 4 SYP No.2D
OTHERS 2 X 4 SYP No.3

BRACING
TOP CHORD Structural wood sheathing directly applied or 6-0-0 oc purlins.
BOT CHORD Rigid ceiling directly applied or 6-0-0 oc bracing.

REACTIONS (lb/size) 2=395/10-7-8, 8=395/10-7-8, 11=211/10-7-8, 12=295/10-7-8, 10=295/10-7-8
Max Horz 2=108(load case 5)
Max Uplift2=-312(load case 5), 8=-328(load case 6), 11=-49(load case 5), 12=-116(load case 5), 10=-121(load case 6)
Max Grav 2=395(load case 7), 8=395(load case 8), 11=211(load case 1), 12=299(load case 7), 10=299(load case 8)

FORCES (lb) - Maximum Compression/Maximum Tension
TOP CHORD 1-2=-16/75, 2-3=-38/67, 3-4=-15/68, 4-5=-30/155, 5-6=-30/155, 6-7=0/68, 7-8=-38/53, 8-9=-16/75
BOT CHORD 2-12=-15/116, 11-12=-15/116, 10-11=-15/116, 8-10=-15/116
WEBS 5-11=-166/66, 4-12=-215/257, 6-10=-215/257

NOTES
1) Unbalanced roof live loads have been considered for this design.
2) Wind: ASCE 7-98; 120mph (3-second gust); h=20ft; TCDL=4.2psf; BCDL=3.0psf; Category II; Exp B; enclosed; MWFRS gable end zone and C-C Exterior(2) zone; Lumber DOL=1.60 plate grip DOL=1.60. This truss is designed for C-C for members and forces, and for MWFRS for reactions specified.
3) Truss designed for wind loads in the plane of the truss only. For studs exposed to wind (normal to the face), see MiTek "Standard Gable End Detail"
4) Gable requires continuous bottom chord bearing.
5) Gable studs spaced at 2-0-0 oc.
6) Provide mechanical connection (by others) of truss to bearing plate capable of withstanding 312 lb uplift at joint 2, 328 lb uplift at joint 8, 49 lb uplift at joint 11, 116 lb uplift at joint 12 and 121 lb uplift at joint 10.
7) In the LOAD CASE(S) section, loads applied to the face of the truss are noted as front (F) or back (B).

LOAD CASE(S) Standard
1) Regular: Lumber Increase=1.25, Plate Increase=1.25
Uniform Loads (plf)
Vert: 1-5=-87(F=-33), 5-9=-87(F=-33), 2-8=-30

NOVEMBER 14,2005 TRUSS DESIGN ENGINEER:
THOMAS E. MILLER PE 56877, BYRON K. ANDERSON PE 60987
STRUCTURAL ENGINEERING AND INSPECTIONS, INC. EB 9196
16105 N. FLORIDA AVE. STE B, LUTZ, FL 33549

Job	Truss	Truss Type	Qty	Ply	Dwg.#1114051618
L132306	T03	COMMON	2	1	Job Reference (optional)

Builders FirstSource, Lake City, Fl 32055

6.200 s Jul 13 2005 MiTek Industries, Inc. Tue Sep 27 15:52:53 2005 Page 1

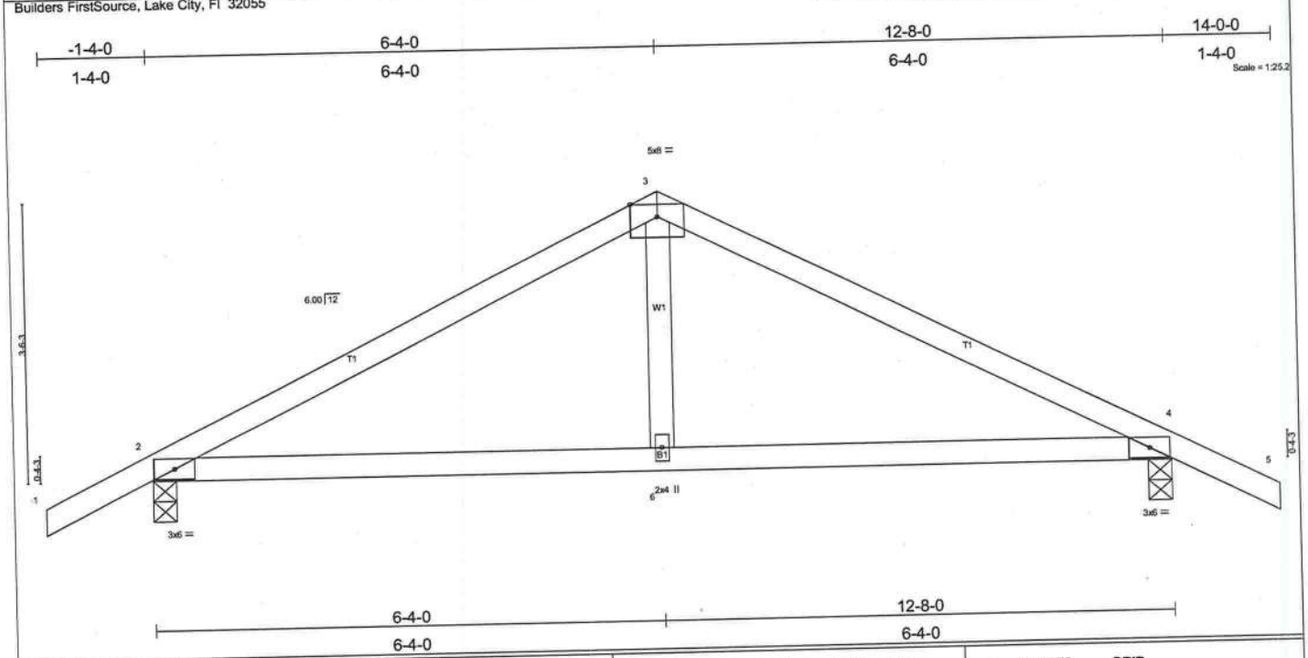

LOADING (psf)		SPACING	2-0-0	CSI		DEFL	in	(loc)	l/defl	L/d	PLATES	GRIP
TCLL	20.0	Plates Increase	1.25	TC	0.35	Vert(LL)	-0.05	2-6	>999	240	MT20	244/190
TCDL	7.0	Lumber Increase	1.25	BC	0.33	Vert(TL)	-0.08	2-6	>999	180		
BCLL	10.0	Rep Stress Incr	YES	WB	0.08	Horz(TL)	0.01	4	n/a	n/a		
BCDL	5.0	Code FBC2001/TPI2002		(Matrix)							Weight: 49 lb	

LUMBER
TOP CHORD 2 X 4 SYP No.2D
BOT CHORD 2 X 4 SYP No.2D
WEBS 2 X 4 SYP No.3

BRACING
TOP CHORD Structural wood sheathing directly applied or 6-0-0 oc purlins.
BOT CHORD Rigid ceiling directly applied or 10-0-0 oc bracing.

REACTIONS (lb/size) 2=600/0-3-8, 4=600/0-3-8
Max Horz 2=-110(load case 6)
Max Uplift2=-311(load case 5), 4=-311(load case 6)

FORCES (lb) - Maximum Compression/Maximum Tension
TOP CHORD 1-2=0/31, 2-3=-735/507, 3-4=-735/507, 4-5=0/31
BOT CHORD 2-6=-261/594, 4-6=-261/594
WEBS 3-6=0/235

NOTES
1) Unbalanced roof live loads have been considered for this design.
2) Wind: ASCE 7-98; 120mph (3-second gust); h=20ft; TCDL=4.2psf; BCDL=3.0psf; Category II; Exp B; enclosed; MWFRS gable end zone and C-C Exterior(2) zone; Lumber DOL=1.60 plate grip DOL=1.60. This truss is designed for C-C for members and forces, and for MWFRS for reactions specified.
3) Provide mechanical connection (by others) of truss to bearing plate capable of withstanding 311 lb uplift at joint 2 and 311 lb uplift at joint 4.

LOAD CASE(S) Standard

NOVEMBER 14,2005 TRUSS DESIGN ENGINEER:
THOMAS E. MILLER PE 56877, BYRON K. ANDERSON PE 60987
STRUCTURAL ENGINEERING AND INSPECTIONS, INC. EB 9196
16105 N. FLORIDA AVE. STE B, LUTZ, FL 33549

Job	Truss	Truss Type	Qty	Ply	Dwg.#1114051619
L132306	T03G	COMMON	1	1	Job Reference (optional)

Builders FirstSource, Lake City, Fl 32055

6.200 s Jul 13 2005 MiTek Industries, Inc. Tue Sep 27 15:52:54 2005 Page 1

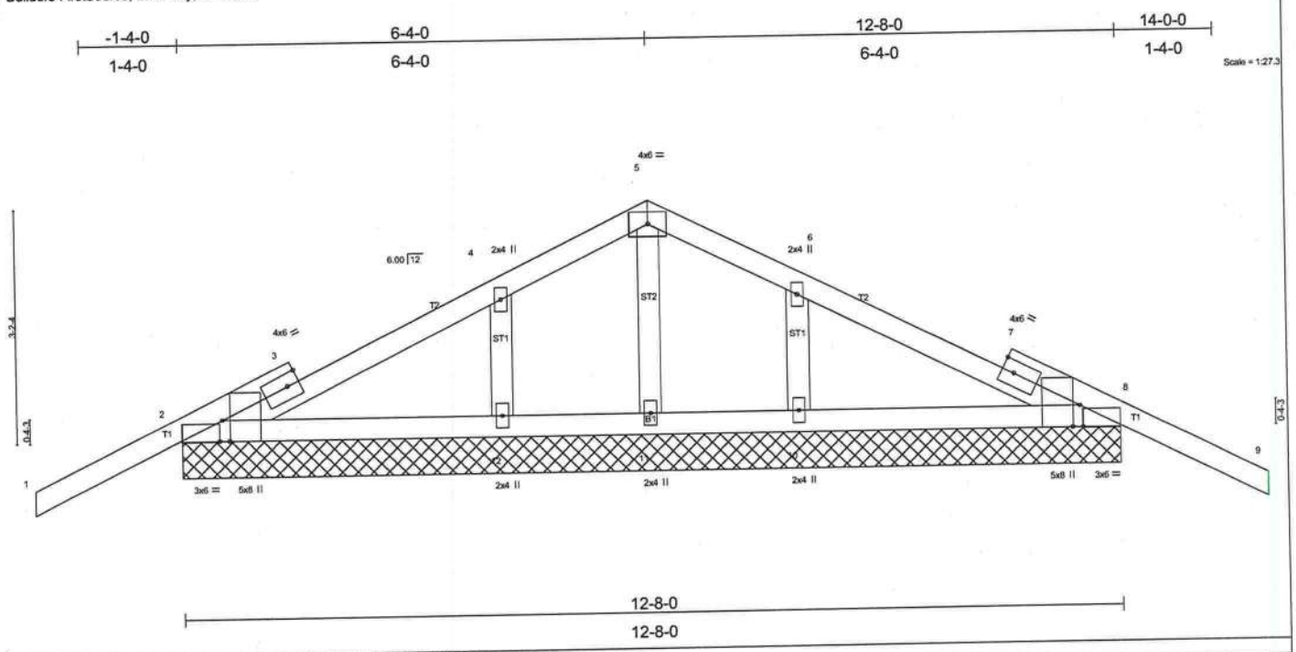

Plate Offsets (X,Y): [2:0-3-8,Edge], [2:0-0-8,Edge], [8:0-3-8,Edge], [8:0-0-8,Edge]

LOADING (psf)		SPACING	2-0-0	CSI		DEFL	in	(loc)	l/defl	L/d	PLATES	GRIP
TCLL	20.0	Plates Increase	1.25	TC	0.39	Vert(LL)	-0.02	9	n/r	90	MT20	244/190
TCDL	7.0	Lumber Increase	1.25	BC	0.09	Vert(TL)	-0.03	9	n/r	80		
BCLL	10.0	Rep Stress Incr	NO	WB	0.09	Horz(TL)	0.00	8	n/a	n/a		
BCDL	5.0	Code FBC2001/TPI2002		(Matrix)							Weight: 59 lb	

LUMBER
TOP CHORD 2 X 4 SYP No.2D
BOT CHORD 2 X 4 SYP No.2D
OTHERS 2 X 4 SYP No.3

BRACING
TOP CHORD Structural wood sheathing directly applied or 10-0-0 oc purlins.
BOT CHORD Rigid ceiling directly applied or 6-0-0 oc bracing.

REACTIONS (lb/size) 2=385/12-8-0, 8=385/12-8-0, 11=201/12-8-0, 12=430/12-8-0, 10=430/12-8-0
Max Horz 2=-120(load case 6)
Max Uplift2=-295(load case 5), 8=-312(load case 6), 11=-41(load case 5), 12=-197(load case 5), 10=-202(load case 6)
Max Grav 2=394(load case 7), 8=394(load case 8), 11=201(load case 1), 12=432(load case 7), 10=432(load case 8)

FORCES (lb) - Maximum Compression/Maximum Tension
TOP CHORD 1-2=-14/75, 2-3=-78/96, 3-4=-79/205, 4-5=0/140, 5-6=0/140, 6-7=-64/205, 7-8=-52/96, 8-9=-14/75
BOT CHORD 2-12=-117/219, 11-12=-117/219, 10-11=-116/219, 8-10=-116/219
WEBS 5-11=-195/48, 4-12=-304/347, 6-10=-304/347

NOTES
1) Unbalanced roof live loads have been considered for this design.
2) Wind: ASCE 7-98; 120mph (3-second gust); h=20ft; TCDL=4.2psf; BCDL=3.0psf; Category II; Exp B; enclosed; MWFRS gable end zone and C-C Exterior(2) zone; Lumber DOL=1.60 plate grip DOL=1.60. This truss is designed for C-C for members and forces, and for MWFRS for reactions specified.
3) Truss designed for wind loads in the plane of the truss only. For studs exposed to wind (normal to the face), see MiTek "Standard Gable End Detail"
4) Gable requires continuous bottom chord bearing.
5) Gable studs spaced at 2-0-0 oc.
6) Provide mechanical connection (by others) of truss to bearing plate capable of withstanding 295 lb uplift at joint 2, 312 lb uplift at joint 8, 41 lb uplift at joint 11, 197 lb uplift at joint 12 and 202 lb uplift at joint 10.
7) In the LOAD CASE(S) section, loads applied to the face of the truss are noted as front (F) or back (B).

LOAD CASE(S) Standard
1) Regular: Lumber Increase=1.25, Plate Increase=1.25
Uniform Loads (plf)
Vert: 1-5=-87(F=-33), 5-9=-87(F=-33), 2-8=-30

NOVEMBER 14,2005 TRUSS DESIGN ENGINEER:
THOMAS E. MILLER PE 56877, BYRON K. ANDERSON PE 60987
STRUCTURAL ENGINEERING AND INSPECTIONS, INC. EB 9196
16105 N. FLORIDA AVE. STE B, LUTZ, FL 33549

Job	Truss	Truss Type	Qty	Ply	Dwg.#1114051620
L132306	T04	COMMON	1	2	Job Reference (optional)

Builders FirstSource, Lake City, Fl 32055

6.200 s Jul 13 2005 MiTek Industries, Inc. Tue Sep 27 15:52:55 2005 Page 1

-1-4-0	3-5-4	6-4-0	9-2-12	12-8-0
1-4-0	3-5-4	2-10-12	2-10-12	3-5-4

Scale = 1:23.0

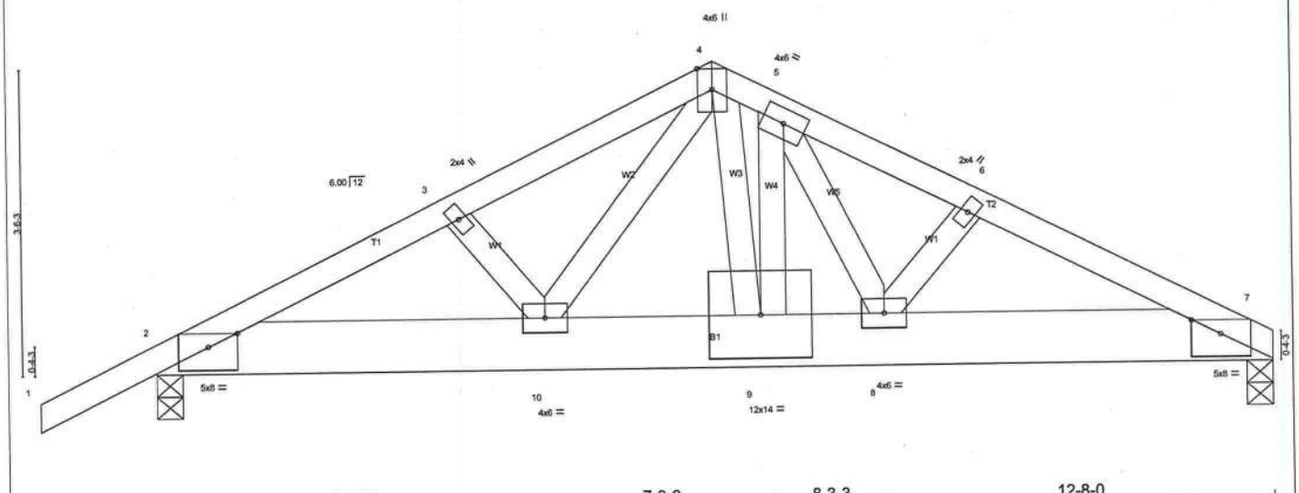

4-4-13	7-0-0	8-3-3	12-8-0
4-4-13	2-7-3	1-3-3	4-4-13

Plate Offsets (X,Y): [2:0-4-0,0-1-15], [7:0-4-0,0-1-15]

LOADING (psf)		SPACING	2-0-0	CSI		DEFL	in	(loc)	l/defl	L/d	PLATES	GRIP
TCLL	20.0	Plates Increase	1.25	TC	0.22	Vert(LL)	-0.05	8	>999	240	MT20	244/190
TCDL	7.0	Lumber Increase	1.25	BC	0.49	Vert(TL)	-0.09	8	>999	180		
BCLL	10.0	Rep Stress Incr	NO	WB	0.29	Horz(TL)	0.02	7	n/a	n/a		
BCDL	5.0	Code FBC2001/TPI2002		(Matrix)							Weight: 166 lb	

LUMBER
TOP CHORD 2 X 4 SYP No.2D
BOT CHORD 2 X 8 SYP No.1D
WEBS 2 X 4 SYP No.3 "Except"
W3 2 X 4 SYP No.2D

BRACING
TOP CHORD Structural wood sheathing directly applied or 5-10-2 oc purlins.
BOT CHORD Rigid ceiling directly applied or 10-0-0 oc bracing.

REACTIONS (lb/size) 7=3707/0-3-8, 2=2121/0-3-8
Max Horz 2=132(load case 4)
Max Uplift7=-1741(load case 5), 2=-1045(load case 4)

FORCES (lb) - Maximum Compression/Maximum Tension
TOP CHORD 1-2=0/37, 2-3=-4100/1855, 3-4=-4011/1849, 4-5=-4443/2129, 5-6=-5433/2565, 6-7=-5545/2588
BOT CHORD 2-10=-1684/3636, 9-10=-1628/3605, 8-9=-1893/4188, 7-8=-2284/4971
WEBS 3-10=-89/136, 4-10=-103/112, 6-8=-279/223, 5-9=-606/370, 4-9=-1610/3303, 5-8=-724/1503

NOTES
1) 2-ply truss to be connected together with 0.131"x3" Nails as follows:
Top chords connected as follows: 2 X 4 - 1 row at 0-9-0 oc.
Bottom chords connected as follows: 2 X 8 - 2 rows at 0-9-0 oc.
Webs connected as follows: 2 X 4 - 1 row at 0-9-0 oc, Except member 5-9 2 X 4 - 1 row at 0-8-0 oc.
2) All loads are considered equally applied to all plies, except if noted as front (F) or back (B) face in the LOAD CASE(S) section. Ply to ply connections have been provided to distribute only loads noted as (F) or (B), unless otherwise indicated.
3) Unbalanced roof live loads have been considered for this design.
4) Wind: ASCE 7-98; 120mph (3-second gust); h=20ft; TCDL=4.2psf; BCDL=3.0psf; Category II; Exp B; enclosed; MWFRS gable end zone; Lumber DOL=1.60 plate grip DOL=1.60.
5) Provide mechanical connection (by others) of truss to bearing plate capable of withstanding 1741 lb uplift at joint 7 and 1045 lb uplift at joint 2.
6) Girder carries tie-in span(s): 27-4-0 from 8-0-0 to 12-8-0
7) Hanger(s) or other connection device(s) shall be provided sufficient to support concentrated load(s) 2470 lb down and 1190 lb up at 7-0-0 on bottom chord. The design/selection of such connection device(s) is the responsibility of others.

LOAD CASE(S) Standard
1) Regular: Lumber Increase=1.25, Plate Increase=1.25
Uniform Loads (plf)
Vert: 1-4=-54, 4-7=-54, 2-8=-30, 7-8=-556(F=-526)
Concentrated Loads (lb)
Vert: 9=-2470(F)

NOVEMBER 14,2005 TRUSS DESIGN ENGINEER:
THOMAS E. MILLER PE 56877, BYRON K. ANDERSON PE 60987
STRUCTURAL ENGINEERING AND INSPECTIONS, INC. EB 9196
16105 N. FLORIDA AVE. STE B, LUTZ, FL 33549

Job	Truss	Truss Type	Qty	Ply	Dwg.#1114051621
L132306	T05	HIP	1	1	Job Reference (optional)

Builders FirstSource, Lake City, Fl 32055

6.200 s Jul 13 2005 MiTek Industries, Inc. Tue Sep 27 15:52:56 2005 Page 1

-1-4-0	3-0-0	8-4-14	13-8-0	18-11-2	24-4-0	27-4-0
1-4-0	3-0-0	5-4-14	5-3-2	5-3-2	5-4-14	3-0-0

Scale: 1/4"=1'

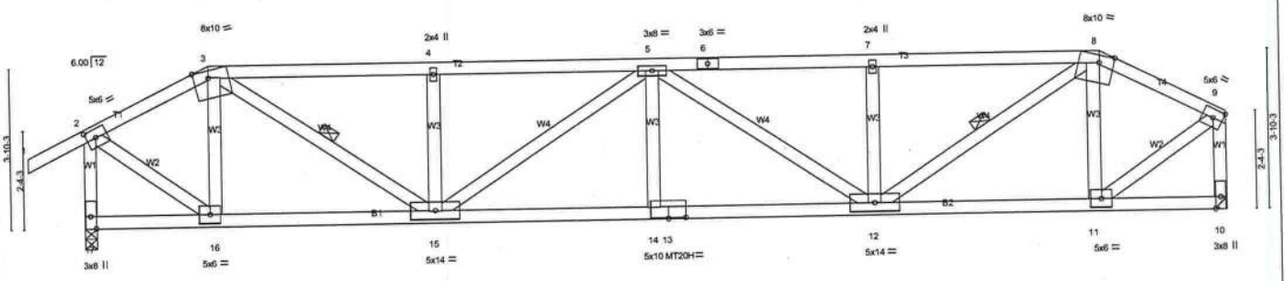

3-0-0	8-4-14	13-8-0	18-11-2	24-4-0	27-4-0
3-0-0	5-4-14	5-3-2	5-3-2	5-4-14	3-0-0

Plate Offsets (X,Y): [2:0-2-11,0-2-8], [3:0-4-3,Edge], [8:0-4-3,Edge], [13:0-5-0,0-0-4]

LOADING (psf)		SPACING	2-0-0	CSI		DEFL	in	(loc)	l/defl	L/d	PLATES	GRIP
TCLL	20.0	Plates Increase	1.25	TC	0.62	Vert(LL)	0.28	14	>999	240	MT20	244/190
TCDL	7.0	Lumber Increase	1.25	BC	0.81	Vert(TL)	-0.44	14-15	>745	180	MT20H	187/143
BCLL	10.0	Rep Stress Incr	NO	WB	0.86	Horz(TL)	0.10	10	n/a	n/a		
BCDL	5.0	Code FBC2001/TPI2002		(Matrix)							Weight: 160 lb	

LUMBER
TOP CHORD 2 X 4 SYP No.2D
BOT CHORD 2 X 4 SYP No.1D
WEBS 2 X 4 SYP No.3 *Except*
W1 2 X 4 SYP No.2D, W1 2 X 4 SYP No.2D

BRACING
TOP CHORD Structural wood sheathing directly applied or 2-10-11 oc purlins, except end verticals.
BOT CHORD Rigid ceiling directly applied or 4-1-1 oc bracing.
WEBS 1 Row at midpt 3-15, 8-12

REACTIONS (lb/size) 17=2555/0-3-8, 10=2470/Mechanical
Max Horz 17=152(load case 4)
Max Uplift17=-1367(load case 3), 10=-1343(load case 2)

FORCES (lb) - Maximum Compression/Maximum Tension
TOP CHORD 1-2=0/36, 2-3=-2189/1262, 3-4=-4090/2449, 4-5=-4090/2449, 5-6=-4096/2431, 6-7=-4096/2431, 7-8=-4097/2430, 8-9=-2200/1237, 2-17=-2482/1376, 9-10=-2395/1348
BOT CHORD 16-17=-122/25, 15-16=-1053/1866, 14-15=-2698/4795, 13-14=-2698/4795, 12-13=-2698/4795, 11-12=-1008/1881, 10-11=-36/44
WEBS 3-16=-1034/777, 3-15=-1531/2670, 4-15=-638/640, 5-15=-858/495, 5-14=0/342, 5-12=-853/498, 7-12=-638/639, 8-12=-1533/2665, 8-11=-1033/778, 2-16=-1243/2306, 9-11=-1245/2298

NOTES
1) Unbalanced roof live loads have been considered for this design.
2) Wind: ASCE 7-98; 120mph (3-second gust); h=20ft; TCDL=4.2psf; BCDL=3.0psf; Category II; Exp B; enclosed; MWFRS gable end zone; end vertical left exposed; Lumber DOL=1.60 plate grip DOL=1.60.
3) Provide adequate drainage to prevent water ponding.
4) All plates are MT20 plates unless otherwise indicated.
5) Refer to girder(s) for truss to truss connections.
6) Provide mechanical connection (by others) of truss to bearing plate capable of withstanding 1367 lb uplift at joint 17 and 1343 lb uplift at joint 10.
7) Girder carries hip end with 0-0-0 right side setback, 0-0-0 left side setback, and 7-0-0 end setback.
8) In the LOAD CASE(S) section, loads applied to the face of the truss are noted as front (F) or back (B).

LOAD CASE(S) Standard
1) Regular: Lumber Increase=1.25, Plate Increase=1.25
Uniform Loads (plf)
Vert: 1-2=-54, 2-3=-118(F=-64), 3-8=-118(F=-64), 8-9=-118(F=-64), 10-17=-65(F=-35)

NOVEMBER 14,2005 TRUSS DESIGN ENGINEER:
THOMAS E. MILLER PE 56877, BYRON K. ANDERSON PE 60987
STRUCTURAL ENGINEERING AND INSPECTIONS, INC. EB 9196
16105 N. FLORIDA AVE. STE B, LUTZ, FL 33549

Job	Truss	Truss Type	Qty	Ply	Dwg.#1114051622
L132306	T06	HIP	1	1	Job Reference (optional)

Builders FirstSource, Lake City, Fl 32055 — 6.200 s Jul 13 2005 MiTek Industries, Inc. Tue Sep 27 15:52:57 2005 Page 1

-1-4-0	5-0-0	10-9-5	16-6-11	22-4-0	27-4-0
1-4-0	5-0-0	5-9-5	5-9-5	5-9-5	5-0-0

Scale: 1/4"=1'

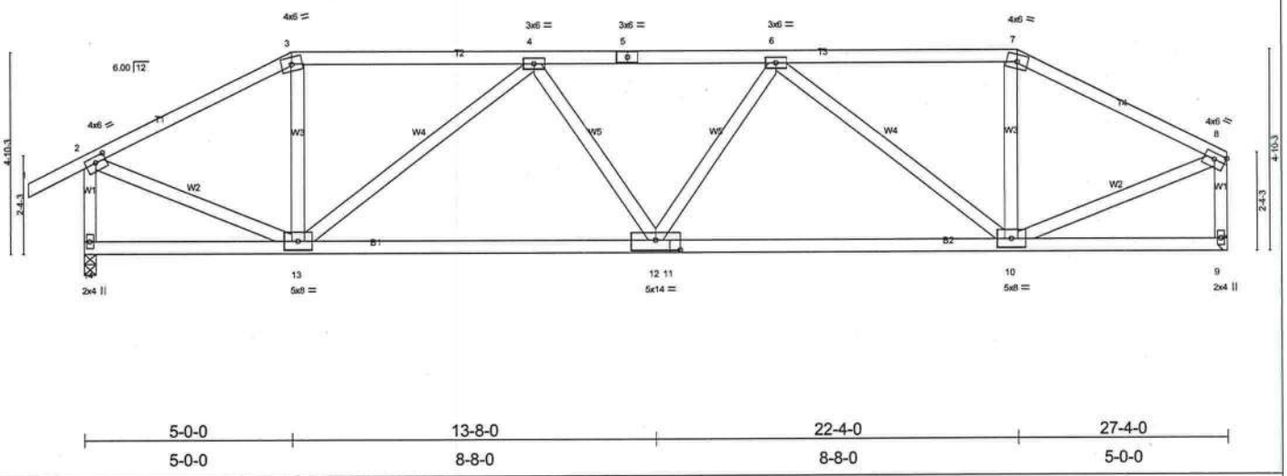

5-0-0	13-8-0	22-4-0	27-4-0
5-0-0	8-8-0	8-8-0	5-0-0

Plate Offsets (X,Y): [2:0-3-0,0-1-12], [8:Edge,0-1-12], [11:0-7-0,0-3-0]

LOADING (psf)		SPACING	2-0-0	CSI		DEFL	in	(loc)	l/defl	L/d	PLATES	GRIP
TCLL	20.0	Plates Increase	1.25	TC	0.26	Vert(LL)	-0.14	10-12	>999	240	MT20	244/190
TCDL	7.0	Lumber Increase	1.25	BC	0.49	Vert(TL)	-0.23	10-12	>999	180		
BCLL	10.0	Rep Stress Incr	YES	WB	0.71	Horz(TL)	0.04	9	n/a	n/a		
BCDL	5.0	Code FBC2001/TPI2002		(Matrix)							Weight: 155 lb	

LUMBER
TOP CHORD 2 X 4 SYP No.2D
BOT CHORD 2 X 4 SYP No.2D
WEBS 2 X 4 SYP No.3 *Except*
W1 2 X 4 SYP No.2D, W1 2 X 4 SYP No.2D

BRACING
TOP CHORD Structural wood sheathing directly applied or 4-10-10 oc purlins, except end verticals.
BOT CHORD Rigid ceiling directly applied or 7-1-12 oc bracing.

REACTIONS (lb/size) 14=1218/0-3-8, 9=1134/Mechanical
Max Horz 14=176(load case 5)
Max Uplift14=-454(load case 4), 9=-430(load case 3)

FORCES (lb) - Maximum Compression/Maximum Tension
TOP CHORD 1-2=0/36, 2-3=-1233/706, 3-4=-1059/707, 4-5=-1705/985, 5-6=-1705/985, 6-7=-1068/691, 7-8=-1241/684, 2-14=-1161/763, 8-9=-1075/637
BOT CHORD 13-14=-159/52, 12-13=-836/1617, 11-12=-829/1620, 10-11=-829/1620, 9-10=-67/60
WEBS 3-13=-49/289, 4-13=-756/421, 4-12=0/179, 6-12=0/176, 6-10=-751/423, 7-10=-51/288, 2-13=-438/1101, 8-10=-494/1087

NOTES
1) Unbalanced roof live loads have been considered for this design.
2) Wind: ASCE 7-98; 120mph (3-second gust); h=20ft; TCDL=4.2psf; BCDL=3.0psf; Category II; Exp B; enclosed; MWFRS gable end zone and C-C Exterior(2) zone; end vertical left exposed; Lumber DOL=1.60 plate grip DOL=1.60. This truss is designed for C-C for members and forces, and for MWFRS for reactions specified.
3) Provide adequate drainage to prevent water ponding.
4) Refer to girder(s) for truss to truss connections.
5) Provide mechanical connection (by others) of truss to bearing plate capable of withstanding 454 lb uplift at joint 14 and 430 lb uplift at joint 9.

LOAD CASE(S) Standard

NOVEMBER 14,2005 TRUSS DESIGN ENGINEER:
THOMAS E. MILLER PE 56877, BYRON K. ANDERSON PE 60987
STRUCTURAL ENGINEERING AND INSPECTIONS, INC. EB 9196
16105 N. FLORIDA AVE. STE B, LUTZ, FL 33549

Job	Truss	Truss Type	Qty	Ply	Dwg.#1114051623
L132306	T07	HIP	1	1	Job Reference (optional)

Builders FirstSource, Lake City, Fl 32055

6.200 s Jul 13 2005 MiTek Industries, Inc. Tue Sep 27 15:52:57 2005 Page 1

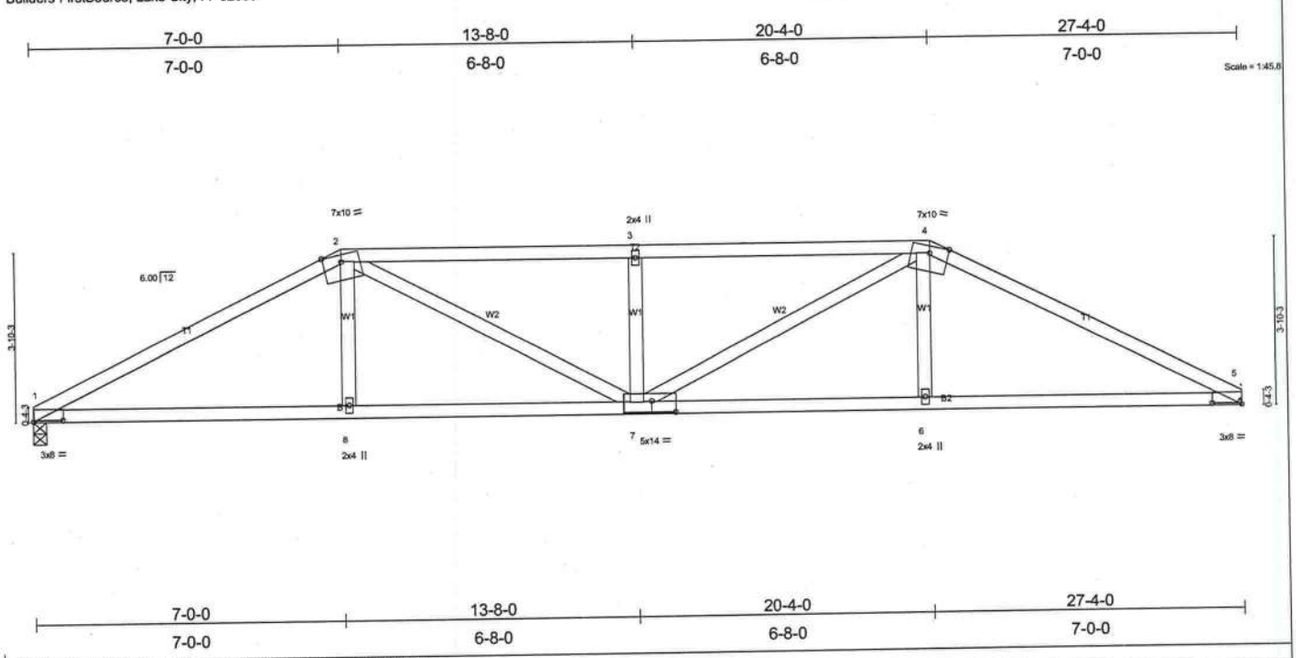

Plate Offsets (X,Y): [1:0-8-0,0-0-6], [5:0-8-0,0-0-6], [7:0-6-8,0-3-0]

LOADING (psf)		SPACING	2-0-0	CSI		DEFL	in	(loc)	l/defl	L/d	PLATES	GRIP
TCLL	20.0	Plates Increase	1.25	TC	0.53	Vert(LL)	-0.15	7-8	>999	240	MT20	244/190
TCDL	7.0	Lumber Increase	1.25	BC	0.54	Vert(TL)	-0.23	7-8	>999	180		
BCLL	10.0	Rep Stress Incr	YES	WB	0.33	Horz(TL)	0.07	5	n/a	n/a		
BCDL	5.0	Code FBC2001/TPI2002		(Matrix)							Weight: 120 lb	

LUMBER
TOP CHORD 2 X 4 SYP No.2D
BOT CHORD 2 X 4 SYP No.2D
WEBS 2 X 4 SYP No.3

BRACING
TOP CHORD Structural wood sheathing directly applied or 4-1-9 oc purlins.
BOT CHORD Rigid ceiling directly applied or 6-5-14 oc bracing.

REACTIONS (lb/size) 1=1139/0-3-8, 5=1139/Mechanical
Max Horz 1=84(load case 5)
Max Uplift1=-383(load case 4), 5=-383(load case 3)

FORCES (lb) - Maximum Compression/Maximum Tension
TOP CHORD 1-2=-2045/1125, 2-3=-2235/1309, 3-4=-2235/1309, 4-5=-2057/1132
BOT CHORD 1-8=-870/1753, 7-8=-870/1763, 6-7=-879/1778, 5-6=-879/1768
WEBS 2-8=-0/246, 2-7=-351/661, 3-7=-352/322, 4-7=-347/647, 4-6=-0/248

NOTES
1) Unbalanced roof live loads have been considered for this design.
2) Wind: ASCE 7-98; 120mph (3-second gust); h=20ft; TCDL=4.2psf; BCDL=3.0psf; Category II; Exp B; enclosed; MWFRS gable end zone and C-C Exterior(2) zone; Lumber DOL=1.60 plate grip DOL=1.60. This truss is designed for C-C for members and forces, and for MWFRS for reactions specified.
3) Provide adequate drainage to prevent water ponding.
4) Refer to girder(s) for truss to truss connections.
5) Provide mechanical connection (by others) of truss to bearing plate capable of withstanding 383 lb uplift at joint 1 and 383 lb uplift at joint 5.

LOAD CASE(S) Standard

NOVEMBER 14,2005 TRUSS DESIGN ENGINEER:
THOMAS E. MILLER PE 56877, BYRON K. ANDERSON PE 60987
STRUCTURAL ENGINEERING AND INSPECTIONS, INC. EB 9196
16105 N. FLORIDA AVE. STE B, LUTZ, FL 33549

Job	Truss	Truss Type	Qty	Ply	Dwg.#1114051624
L132306	T08	HIP	1	1	Job Reference (optional)

Builders FirstSource, Lake City, Fl 32055

6.200 s Jul 13 2005 MiTek Industries, Inc. Tue Sep 27 15:52:58 2005 Page 1

4-9-4	9-0-0	13-8-0	18-4-0	22-6-12	27-4-0	28-8-0
4-9-4	4-2-12	4-8-0	4-8-0	4-2-12	4-9-4	1-4-0

Scale: 1/4"=1'

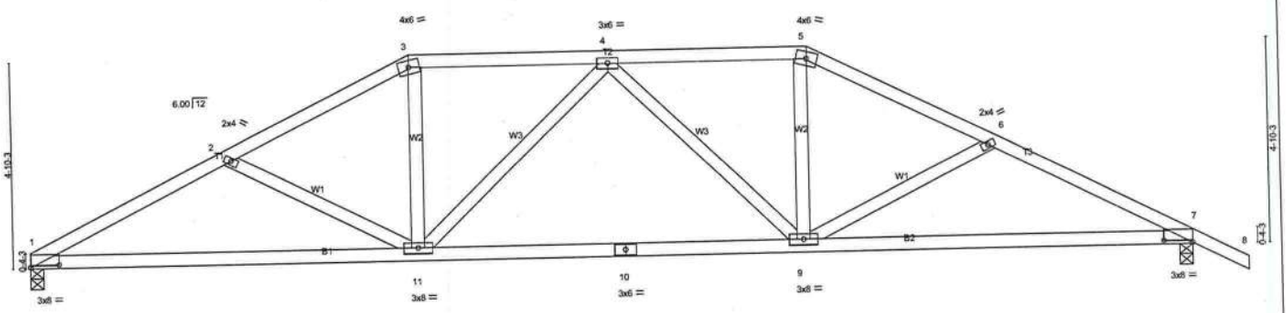

9-0-0	18-4-0	27-4-0
9-0-0	9-4-0	9-0-0

Plate Offsets (X,Y): [1:0-8-0,0-0-10], [7:0-8-0,0-0-10]

LOADING (psf)		SPACING	2-0-0	CSI		DEFL	in	(loc)	l/defl	L/d	PLATES	GRIP
TCLL	20.0	Plates Increase	1.25	TC	0.28	Vert(LL)	-0.18	1-11	>999	240	MT20	244/190
TCDL	7.0	Lumber Increase	1.25	BC	0.54	Vert(TL)	-0.30	1-11	>999	180		
BCLL	10.0	Rep Stress Incr	YES	WB	0.20	Horz(TL)	0.07	7	n/a	n/a		
BCDL	5.0	Code FBC2001/TPI2002		(Matrix)							Weight: 132 lb	

LUMBER
TOP CHORD 2 X 4 SYP No.2D
BOT CHORD 2 X 4 SYP No.2D
WEBS 2 X 4 SYP No.3

BRACING
TOP CHORD Structural wood sheathing directly applied or 4-2-11 oc purlins.
BOT CHORD Rigid ceiling directly applied or 6-6-3 oc bracing.

REACTIONS (lb/size) 1=1134/0-3-8, 7=1218/0-3-8
Max Horz 1=-156(load case 6)
Max Uplift1=-393(load case 5), 7=-498(load case 6)

FORCES (lb) - Maximum Compression/Maximum Tension
TOP CHORD 1-2=-2038/1261, 2-3=-1780/1060, 3-4=-1559/1022, 4-5=-1553/1011, 5-6=-1773/1046, 6-7=-2023/1231, 7-8=0/31
BOT CHORD 1-11=-972/1783, 10-11=-740/1678, 9-10=-740/1678, 7-9=-937/1765
WEBS 2-11=-277/375, 3-11=-219/531, 4-11=-266/206, 4-9=-271/210, 5-9=-208/526, 6-9=-262/347

NOTES
1) Unbalanced roof live loads have been considered for this design.
2) Wind: ASCE 7-98; 120mph (3-second gust); h=20ft; TCDL=4.2psf; BCDL=3.0psf; Category II; Exp B; enclosed; MWFRS gable end zone and C-C Exterior(2) zone; Lumber DOL=1.60 plate grip DOL=1.60. This truss is designed for C-C for members and forces, and for MWFRS for reactions specified.
3) Provide adequate drainage to prevent water ponding.
4) Provide mechanical connection (by others) of truss to bearing plate capable of withstanding 393 lb uplift at joint 1 and 498 lb uplift at joint 7.

LOAD CASE(S) Standard

NOVEMBER 14,2005 TRUSS DESIGN ENGINEER:
THOMAS E. MILLER PE 56877, BYRON K. ANDERSON PE 60987
STRUCTURAL ENGINEERING AND INSPECTIONS, INC. EB 9196
16105 N. FLORIDA AVE. STE B, LUTZ, FL 33549

Job	Truss	Truss Type	Qty	Ply	Dwg.#1114051625
L132306	T09	HIP	1	1	Job Reference (optional)

Builders FirstSource, Lake City, Fl 32055

6.200 s Jul 13 2005 MiTek Industries, Inc. Tue Sep 27 15:52:59 2005 Page 1

5-9-4	11-0-0	16-4-0	21-6-12	27-4-0	28-8-0
5-9-4	5-2-12	5-4-0	5-2-12	5-9-4	1-4-0

Scale: 1/4"=1'

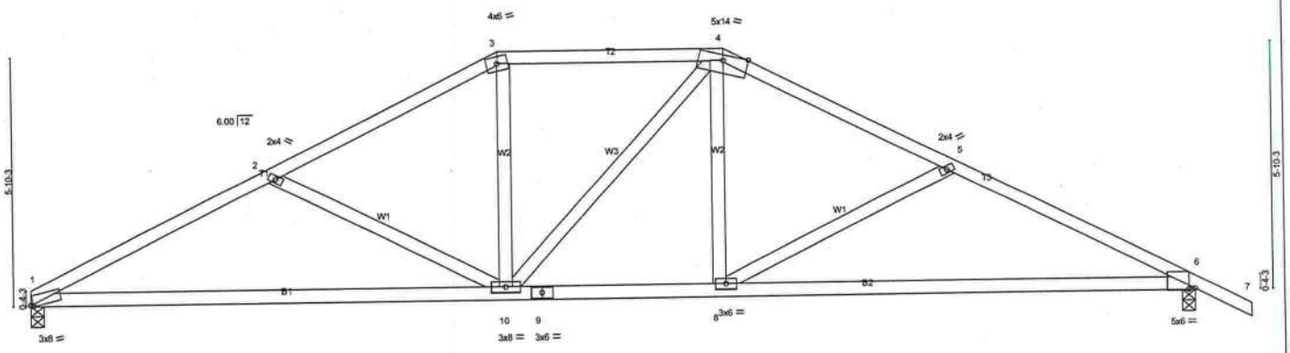

11-0-0	16-4-0	27-4-0
11-0-0	5-4-0	11-0-0

Plate Offsets (X,Y): [1:0-0-10,Edge], [6:0-1-11,Edge]

LOADING (psf)		SPACING	2-0-0	CSI		DEFL	in	(loc)	l/defl	L/d	PLATES	GRIP
TCLL	20.0	Plates Increase	1.25	TC	0.45	Vert(LL)	-0.39	1-10	>840	240	MT20	244/190
TCDL	7.0	Lumber Increase	1.25	BC	0.62	Vert(TL)	-0.66	1-10	>493	180		
BCLL	10.0	Rep Stress Incr	YES	WB	0.26	Horz(TL)	0.07	6	n/a	n/a		
BCDL	5.0	Code FBC2001/TPI2002		(Matrix)							Weight: 132 lb	

LUMBER
TOP CHORD 2 X 4 SYP No.2D
BOT CHORD 2 X 4 SYP No.2D
WEBS 2 X 4 SYP No.3

BRACING
TOP CHORD Structural wood sheathing directly applied or 3-11-6 oc purlins.
BOT CHORD Rigid ceiling directly applied or 6-4-5 oc bracing.

REACTIONS (lb/size) 1=1134/0-3-8, 6=1218/0-3-8
Max Horz 1=-180(load case 6)
Max Uplift1=-418(load case 5), 6=-524(load case 6)

FORCES (lb) - Maximum Compression/Maximum Tension
TOP CHORD 1-2=-1959/1293, 2-3=-1616/1031, 3-4=-1391/1006, 4-5=-1611/1023, 5-6=-1948/1271, 6-7=0/31
BOT CHORD 1-10=-985/1717, 9-10=-554/1387, 8-9=-554/1387, 6-8=-958/1704
WEBS 2-10=-379/482, 3-10=-178/417, 4-10=-132/140, 4-8=-161/412, 5-8=-368/459

NOTES
1) Unbalanced roof live loads have been considered for this design.
2) Wind: ASCE 7-98; 120mph (3-second gust); h=20ft; TCDL=4.2psf; BCDL=3.0psf; Category II; Exp B; enclosed; MWFRS gable end zone and C-C Exterior(2) zone; Lumber DOL=1.60 plate grip DOL=1.60. This truss is designed for C-C for members and forces, and for MWFRS for reactions specified.
3) Provide adequate drainage to prevent water ponding.
4) Provide mechanical connection (by others) of truss to bearing plate capable of withstanding 418 lb uplift at joint 1 and 524 lb uplift at joint 6.

LOAD CASE(S) Standard

NOVEMBER 14,2005 TRUSS DESIGN ENGINEER:
THOMAS E. MILLER PE 56877, BYRON K. ANDERSON PE 60987
STRUCTURAL ENGINEERING AND INSPECTIONS, INC. EB 9196
16105 N. FLORIDA AVE. STE B, LUTZ, FL 33549

Job	Truss	Truss Type	Qty	Ply	Dwg.#1114051626
L132306	T10	HIP	1	1	Job Reference (optional)

Builders FirstSource, Lake City, Fl 32055

6.200 s Jul 13 2005 MiTek Industries, Inc. Tue Sep 27 15:53:00 2005 Page 1

6-9-4	13-0-0	14-4-0	20-6-12	27-4-0	28-8-0
6-9-4	6-2-12	1-4-0	6-2-12	6-9-4	1-4-0

Scale: 1/4"=1'

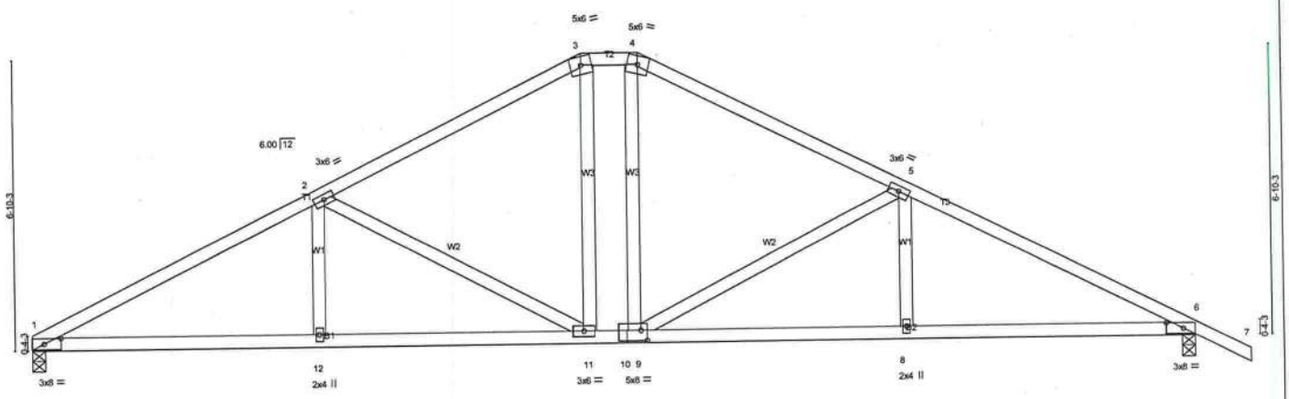

6-9-4	13-0-0	14-4-0	20-6-12	27-4-0
6-9-4	6-2-12	1-4-0	6-2-12	6-9-4

Plate Offsets (X,Y): [1:0-4-12,0-1-8], [6:0-4-12,0-1-8], [10:0-1-12,0-3-0]

LOADING (psf)		SPACING	2-0-0	CSI		DEFL	in	(loc)	l/defl	L/d	PLATES	GRIP
TCLL	20.0	Plates Increase	1.25	TC	0.44	Vert(LL)	0.13	1-12	>999	240	MT20	244/190
TCDL	7.0	Lumber Increase	1.25	BC	0.51	Vert(TL)	-0.19	8-9	>999	180		
BCLL	10.0	Rep Stress Incr	YES	WB	0.62	Horz(TL)	0.07	6	n/a	n/a		
BCDL	5.0	Code FBC2001/TPI2002		(Matrix)							Weight: 137 lb	

LUMBER
TOP CHORD 2 X 4 SYP No.2D
BOT CHORD 2 X 4 SYP No.2D
WEBS 2 X 4 SYP No.3

BRACING
TOP CHORD Structural wood sheathing directly applied or 4-2-13 oc purlins.
BOT CHORD Rigid ceiling directly applied or 6-3-3 oc bracing.

REACTIONS (lb/size) 1=1134/0-3-8, 6=1218/0-3-8
Max Horz 1=-204(load case 6)
Max Uplift1=-440(load case 5), 6=-545(load case 6)

FORCES (lb) - Maximum Compression/Maximum Tension
TOP CHORD 1-2=-2049/1299, 2-3=-1409/1002, 3-4=-1195/990, 4-5=-1408/1001, 5-6=-2036/1275, 6-7=0/31
BOT CHORD 1-12=-973/1757, 11-12=-973/1757, 10-11=-475/1195, 9-10=-475/1195, 8-9=-947/1744, 6-8=-947/1744
WEBS 2-12=0/249, 2-11=-681/571, 3-11=-241/407, 4-9=-234/403, 5-9=-665/541, 5-8=0/242

NOTES
1) Unbalanced roof live loads have been considered for this design.
2) Wind: ASCE 7-98; 120mph (3-second gust); h=20ft; TCDL=4.2psf; BCDL=3.0psf; Category II; Exp B; enclosed; MWFRS gable end zone and C-C Exterior(2) zone; Lumber DOL=1.60 plate grip DOL=1.60. This truss is designed for C-C for members and forces, and for MWFRS for reactions specified.
3) Provide adequate drainage to prevent water ponding.
4) Provide mechanical connection (by others) of truss to bearing plate capable of withstanding 440 lb uplift at joint 1 and 545 lb uplift at joint 6.

LOAD CASE(S) Standard

NOVEMBER 14,2005 TRUSS DESIGN ENGINEER:
THOMAS E. MILLER PE 56877, BYRON K. ANDERSON PE 60987
STRUCTURAL ENGINEERING AND INSPECTIONS, INC. EB 9196
16105 N. FLORIDA AVE. STE B, LUTZ, FL 33549

Job	Truss	Truss Type	Qty	Ply	Dwg.#1114051627
L132306	T11	COMMON	7	1	Job Reference (optional)

Builders FirstSource, Lake City, Fl 32055

6.200 s Jul 13 2005 MiTek Industries, Inc. Tue Sep 27 15:53:00 2005 Page 1

7-1-4	13-8-0	20-2-12	27-4-0	28-8-0
7-1-4	6-6-12	6-6-12	7-1-4	1-4-0

Scale = 1:47.0

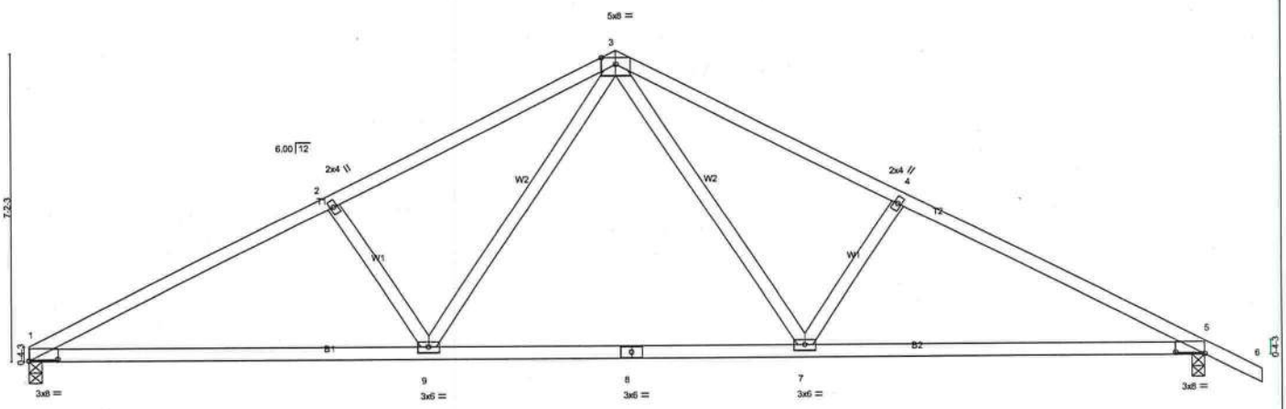

9-3-8	18-0-8	27-4-0
9-3-8	8-9-0	9-3-8

Plate Offsets (X,Y): [1:0-8-0,0-0-6], [5:0-8-0,0-0-6]

LOADING (psf)		SPACING	2-0-0	CSI		DEFL	in	(loc)	l/defl	L/d	PLATES	GRIP
TCLL	20.0	Plates Increase	1.25	TC	0.47	Vert(LL)	-0.24	1-9	>999	240	MT20	244/190
TCDL	7.0	Lumber Increase	1.25	BC	0.54	Vert(TL)	-0.40	1-9	>819	180		
BCLL	10.0	Rep Stress Incr	YES	WB	0.53	Horz(TL)	0.06	5	n/a	n/a		
BCDL	5.0	Code FBC2001/TPI2002		(Matrix)							Weight: 124 lb	

LUMBER
TOP CHORD 2 X 4 SYP No.2D
BOT CHORD 2 X 4 SYP No.2D
WEBS 2 X 4 SYP No.3

BRACING
TOP CHORD Structural wood sheathing directly applied or 3-11-4 oc purlins.
BOT CHORD Rigid ceiling directly applied or 6-2-13 oc bracing.

REACTIONS (lb/size) 1=1134/0-3-8, 5=1218/0-3-8
Max Horz 1=-211(load case 6)
Max Uplift1=-446(load case 5), 5=-551(load case 6)

FORCES (lb) - Maximum Compression/Maximum Tension
TOP CHORD 1-2=-1954/1303, 2-3=-1766/1280, 3-4=-1758/1264, 4-5=-1945/1286, 5-6=0/31
BOT CHORD 1-9=-972/1691, 8-9=-468/1129, 7-8=-468/1129, 5-7=-952/1681
WEBS 2-9=-369/489, 3-9=-447/717, 3-7=-421/704, 4-7=-362/477

NOTES
1) Unbalanced roof live loads have been considered for this design.
2) Wind: ASCE 7-98; 120mph (3-second gust); h=20ft; TCDL=4.2psf; BCDL=3.0psf; Category II; Exp B; enclosed; MWFRS gable end zone and C-C Exterior(2) zone; Lumber DOL=1.60 plate grip DOL=1.60. This truss is designed for C-C for members and forces, and for MWFRS for reactions specified.
3) Provide mechanical connection (by others) of truss to bearing plate capable of withstanding 446 lb uplift at joint 1 and 551 lb uplift at joint 5.

LOAD CASE(S) Standard

NOVEMBER 14,2005 TRUSS DESIGN ENGINEER:
THOMAS E. MILLER PE 56877, BYRON K. ANDERSON PE 60987
STRUCTURAL ENGINEERING AND INSPECTIONS, INC. EB 9196
16105 N. FLORIDA AVE. STE B, LUTZ, FL 33549

Job	Truss	Truss Type	Qty	Ply	Dwg.#1114051628
L132306	T12	COMMON	3	1	Job Reference (optional)

Builders FirstSource, Lake City, Fl 32055 — 6.200 s Jul 13 2005 MiTek Industries, Inc. Tue Sep 27 15:53:01 2005 Page 1

7-1-4	13-8-0	20-2-12	27-4-0
7-1-4	6-6-12	6-6-12	7-1-4

Scale = 1:45.3

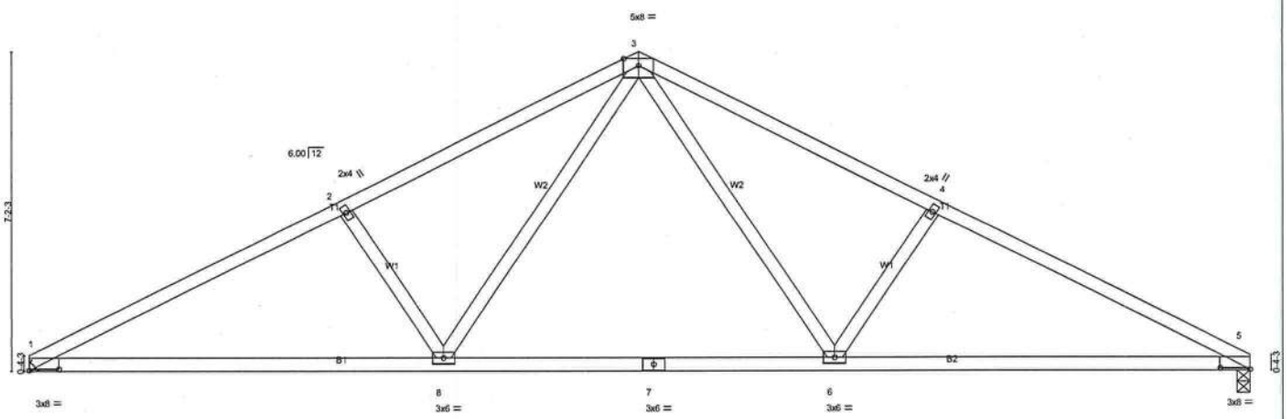

9-3-8	18-0-8	27-4-0
9-3-8	8-9-0	9-3-8

Plate Offsets (X,Y): [1:0-8-0,0-0-6], [5:0-8-0,0-0-6]

LOADING (psf)		SPACING	2-0-0	CSI		DEFL	in	(loc)	l/defl	L/d	PLATES	GRIP
TCLL	20.0	Plates Increase	1.25	TC	0.47	Vert(LL)	-0.24	1-8	>999	240	MT20	244/190
TCDL	7.0	Lumber Increase	1.25	BC	0.54	Vert(TL)	-0.40	1-8	>816	180		
BCLL	10.0	Rep Stress Incr	YES	WB	0.53	Horz(TL)	0.06	5	n/a	n/a		
BCDL	5.0	Code FBC2001/TPI2002		(Matrix)							Weight: 122 lb	

LUMBER
TOP CHORD 2 X 4 SYP No.2D
BOT CHORD 2 X 4 SYP No.2D
WEBS 2 X 4 SYP No.3

BRACING
TOP CHORD Structural wood sheathing directly applied or 3-11-3 oc purlins.
BOT CHORD Rigid ceiling directly applied or 6-0-7 oc bracing.

REACTIONS (lb/size) 1=1136/Mechanical, 5=1136/0-3-8
Max Horz 1=163(load case 5)
Max Uplift1=-447(load case 5), 5=-447(load case 6)

FORCES (lb) - Maximum Compression/Maximum Tension
TOP CHORD 1-2=-1958/1312, 2-3=-1771/1289, 3-4=-1771/1289, 4-5=-1958/1312
BOT CHORD 1-8=-1040/1696, 7-8=-537/1134, 6-7=-537/1134, 5-6=-1040/1696
WEBS 2-8=-369/490, 3-8=-445/716, 3-6=-445/716, 4-6=-369/490

NOTES
1) Unbalanced roof live loads have been considered for this design.
2) Wind: ASCE 7-98; 120mph (3-second gust); h=20ft; TCDL=4.2psf; BCDL=3.0psf; Category II; Exp B; enclosed; MWFRS gable end zone and C-C Exterior(2) zone; Lumber DOL=1.60 plate grip DOL=1.60. This truss is designed for C-C for members and forces, and for MWFRS for reactions specified.
3) Refer to girder(s) for truss to truss connections.
4) Provide mechanical connection (by others) of truss to bearing plate capable of withstanding 447 lb uplift at joint 1 and 447 lb uplift at joint 5.

LOAD CASE(S) Standard

NOVEMBER 14,2005 TRUSS DESIGN ENGINEER:
THOMAS E. MILLER PE 56877, BYRON K. ANDERSON PE 60987
STRUCTURAL ENGINEERING AND INSPECTIONS, INC. EB 9196
16105 N. FLORIDA AVE. STE B, LUTZ, FL 33549

Job	Truss	Truss Type	Qty	Ply	Dwg.#1114051629
L132306	T13	SPECIAL	1	2	Job Reference (optional)

Builders FirstSource, Lake City, Fl 32055 — 6.200 s Jul 13 2005 MiTek Industries, Inc. Tue Sep 27 15:53:02 2005 Page 1

-1-4-0	3-0-0	4-3-8	7-9-12	11-4-0	13-4-0	18-0-9	22-7-7	27-4-0
1-4-0	3-0-0	1-3-8	3-6-4	3-6-4	2-0-0	4-8-9	4-6-13	4-8-9

Scale = 1:48.9

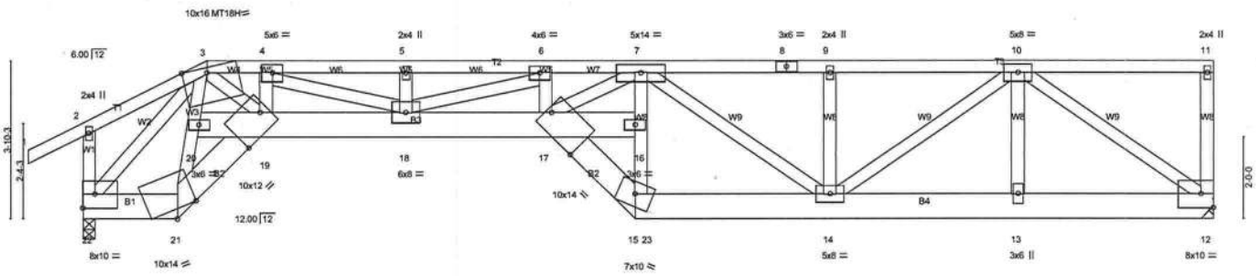

2-3-8	4-3-8	7-9-12	11-4-0	13-4-0	18-0-9	22-7-7	27-4-0
2-3-8	2-0-0	3-6-4	3-6-4	2-0-0	4-8-9	4-6-13	4-8-9

Plate Offsets (X,Y): [3:0-7-3,Edge], [17:1-0-8,0-5-0], [19:0-9-12,0-5-0]

LOADING (psf)		SPACING	2-0-0	CSI		DEFL	in	(loc)	l/defl	L/d	PLATES	GRIP
TCLL	20.0	Plates Increase	1.25	TC	0.65	Vert(LL)	0.46	17-18	>711	240	MT20	244/190
TCDL	7.0	Lumber Increase	1.25	BC	0.76	Vert(TL)	-0.73	17-18	>445	180	MT18H	244/190
BCLL	10.0	Rep Stress Incr	NO	WB	0.70	Horz(TL)	0.31	12	n/a	n/a		
BCDL	5.0	Code FBC2001/TPI2002		(Matrix)							Weight: 432 lb	

LUMBER
TOP CHORD 2 X 4 SYP No.2D
BOT CHORD 2 X 8 SYP No.1D *Except*
B3 2 X 8 SYP 2400F 2.0E
WEBS 2 X 4 SYP No.3 *Except*
W4 2 X 4 SYP No.2D, W7 2 X 4 SYP No.2D, W1 2 X 4 SYP No.2D

BRACING
TOP CHORD Structural wood sheathing directly applied or 3-1-15 oc purlins, except end verticals.
BOT CHORD Rigid ceiling directly applied or 10-0-0 oc bracing, Except:
8-10-3 oc bracing: 17-18
9-11-10 oc bracing: 14-15.

REACTIONS (lb/size) 12=3103/Mechanical, 22=3355/0-3-8
Max Horz 22=197(load case 4)
Max Uplift12=-1753(load case 3), 22=-1684(load case 3)

FORCES (lb) - Maximum Compression/Maximum Tension
TOP CHORD 1-2=0/36, 2-3=-250/209, 3-4=-8535/4561, 4-5=-12545/6770, 5-6=-12545/6770, 6-7=-14737/8067, 7-8=-6014/3383, 8-9=-6014/3383, 9-10=-6014/3383, 10-11=-92/69, 11-12=-261/252, 2-22=-314/295
BOT CHORD 21-22=-1417/2595, 19-21=-2055/3992, 19-20=-126/234, 18-19=-4436/8535, 17-18=-7942/14737, 16-17=-331/579, 15-17=-5113/9280, 15-23=-4397/7826, 14-23=-4398/7826, 13-14=-2078/3683, 12-13=-2078/3683
WEBS 20-21=-2291/1234, 3-20=-2294/1239, 3-19=-3932/7439, 4-19=-1878/1084, 4-18=-2404/4347, 5-18=-178/165, 6-18=-2385/1428, 6-17=-544/931, 7-17=-4225/7962, 15-16=-4955/2895, 7-16=-3275/1868, 7-14=-2251/1262, 9-14=-537/541, 10-14=-1626/2905, 10-13=0/387, 10-12=-4476/2505, 3-22=-3781/1928

NOTES
1) 2-ply truss to be connected together with 0.131"x3" Nails as follows:
Top chords connected as follows: 2 X 4 - 1 row at 0-9-0 oc.
Bottom chords connected as follows: 2 X 8 - 2 rows at 0-9-0 oc.
Webs connected as follows: 2 X 4 - 1 row at 0-9-0 oc.
2) All loads are considered equally applied to all plies, except if noted as front (F) or back (B) face in the LOAD CASE(S) section. Ply to ply connections have been provided to distribute only loads noted as (F) or (B), unless otherwise indicated.
3) Unbalanced roof live loads have been considered for this design.
4) Wind: ASCE 7-98; 120mph (3-second gust); h=20ft; TCDL=4.2psf; BCDL=3.0psf; Category II; Exp B; enclosed; MWFRS gable end zone; end vertical left exposed; Lumber DOL=1.60 plate grip DOL=1.60.
5) Provide adequate drainage to prevent water ponding.
6) All plates are MT20 plates unless otherwise indicated.
7) Refer to girder(s) for truss to truss connections.
8) Provide mechanical connection (by others) of truss to bearing plate capable of withstanding 1753 lb uplift at joint 12 and 1684 lb uplift at joint 22.
9) Girder carries tie-in span(s): 7-0-0 from 0-0-0 to 13-4-0
10) Girder carries hip end with 0-0-0 right side setback, 13-8-0 left side setback, and 7-0-0 end setback.
11) Hanger(s) or other connection device(s) shall be provided sufficient to support concentrated load(s) 1052 lb down and 679 lb up at 13-4-0 on bottom chord. The design/selection of such connection device(s) is the responsibility of others.

LOAD CASE(S) Standard
1) Regular: Lumber Increase=1.25, Plate Increase=1.25
Uniform Loads (plf)
Vert: 1-2=-54, 2-3=-54, 3-7=-54, 7-11=-118(F=-64), 21-22=-129(F=-99), 19-21=-129(F=-99), 19-20=-99(F), 17-19=-129(F=-99), 16-17=-99(F), 15-17=-129(F=-99), 15-23=-30, 12-23=-65(F=-35)
Concentrated Loads (lb)
Vert: 16=-1052(F)

NOVEMBER 14,2005 TRUSS DESIGN ENGINEER:
THOMAS E. MILLER PE 56877, BYRON K. ANDERSON PE 60987
STRUCTURAL ENGINEERING AND INSPECTIONS, INC. EB 9196
16105 N. FLORIDA AVE. STE B, LUTZ, FL 33549

Job	Truss	Truss Type	Qty	Ply	Dwg.#1114051630
L132306	T14	SPECIAL	1	1	Job Reference (optional)

Builders FirstSource, Lake City, Fl 32055 — 6.200 s Jul 13 2005 MiTek Industries, Inc. Tue Sep 27 15:53:03 2005 Page 1

-1-4-0	2-3-8	5-0-0	11-4-0	13-4-0	20-4-0	27-4-0
1-4-0	2-3-8	2-8-8	6-4-0	2-0-0	7-0-0	7-0-0

Scale = 1:48.9

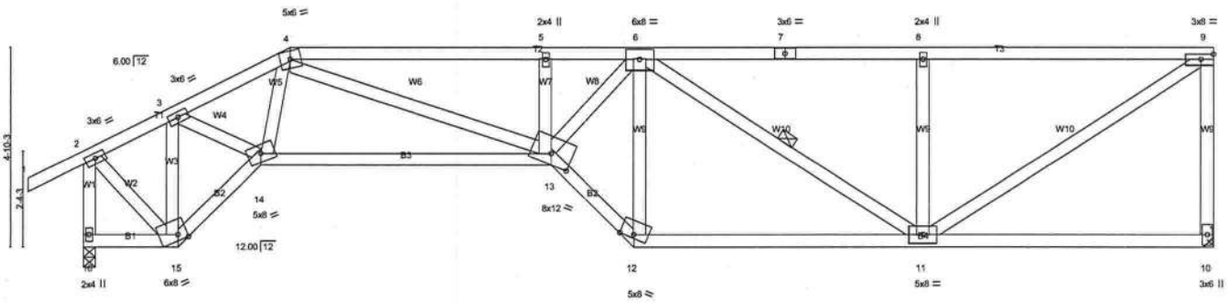

2-3-8	4-3-8	11-4-0	13-4-0	20-4-0	27-4-0
2-3-8	2-0-0	7-0-8	2-0-0	7-0-0	7-0-0

Plate Offsets (X,Y): [13:0-6-0,0-3-4], [15:0-2-11,Edge]

LOADING (psf)		SPACING	2-0-0	CSI		DEFL	in	(loc)	l/defl	L/d	PLATES	GRIP
TCLL	20.0	Plates Increase	1.25	TC	0.90	Vert(LL)	-0.22	13-14	>999	240	MT20	244/190
TCDL	7.0	Lumber Increase	1.25	BC	0.53	Vert(TL)	-0.36	13-14	>912	180		
BCLL	10.0	Rep Stress Incr	YES	WB	0.97	Horz(TL)	0.16	10	n/a	n/a		
BCDL	5.0	Code FBC2001/TPI2002		(Matrix)							Weight: 165 lb	

LUMBER
TOP CHORD 2 X 4 SYP No.2D
BOT CHORD 2 X 4 SYP No.2D
WEBS 2 X 4 SYP No.3 *Except*
W1 2 X 4 SYP No.2D

BRACING
TOP CHORD Structural wood sheathing directly applied or 3-6-11 oc purlins, except end verticals.
BOT CHORD Rigid ceiling directly applied or 5-8-4 oc bracing.
WEBS 1 Row at midpt 6-11

REACTIONS (lb/size) 10=1134/Mechanical, 16=1218/0-3-8
Max Horz 16=252(load case 5)
Max Uplift10=-551(load case 4), 16=-466(load case 4)

FORCES (lb) - Maximum Compression/Maximum Tension
TOP CHORD 1-2=0/36, 2-3=-803/509, 3-4=-2101/1308, 4-5=-2950/1666, 5-6=-2940/1656, 6-7=-1350/719, 7-8=-1350/719, 8-9=-1350/719, 9-10=-1032/607, 2-16=-1157/748
BOT CHORD 15-16=-273/30, 14-15=-731/925, 13-14=-1206/1830, 12-13=-1301/2366, 11-12=-967/1738, 10-11=-28/54
WEBS 3-15=-1256/783, 3-14=-800/1423, 4-14=-114/167, 4-13=-605/1209, 5-13=-185/177, 6-13=-1118/1944, 6-12=-1493/915, 6-11=-466/297, 8-11=-398/359, 9-11=-830/1556, 2-15=-404/891

NOTES
1) Wind: ASCE 7-98; 120mph (3-second gust); h=20ft; TCDL=4.2psf; BCDL=3.0psf; Category II; Exp B; enclosed; MWFRS gable end zone and C-C Exterior(2) zone; end vertical left exposed; Lumber DOL=1.60 plate grip DOL=1.60. This truss is designed for C-C for members and forces, and for MWFRS for reactions specified.
2) Provide adequate drainage to prevent water ponding.
3) Refer to girder(s) for truss to truss connections.
4) Provide mechanical connection (by others) of truss to bearing plate capable of withstanding 551 lb uplift at joint 10 and 466 lb uplift at joint 16.

LOAD CASE(S) Standard

NOVEMBER 14,2005 TRUSS DESIGN ENGINEER:
THOMAS E. MILLER PE 56877, BYRON K. ANDERSON PE 60987
STRUCTURAL ENGINEERING AND INSPECTIONS, INC. EB 9196
16105 N. FLORIDA AVE. STE B, LUTZ, FL 33549

Job	Truss	Truss Type	Qty	Ply	Dwg.#1114051631
L132306	T15	SPECIAL	1	1	Job Reference (optional)

Builders FirstSource, Lake City, Fl 32055 — 6.200 s Jul 13 2005 MiTek Industries, Inc. Tue Sep 27 15:53:04 2005 Page 1

-1-4-0	2-3-8	4-3-8	7-0-0	11-4-0	13-4-0	20-4-0	27-4-0
1-4-0	2-3-8	2-0-0	2-8-8	4-4-0	2-0-0	7-0-0	7-0-0

Scale = 1:48.9

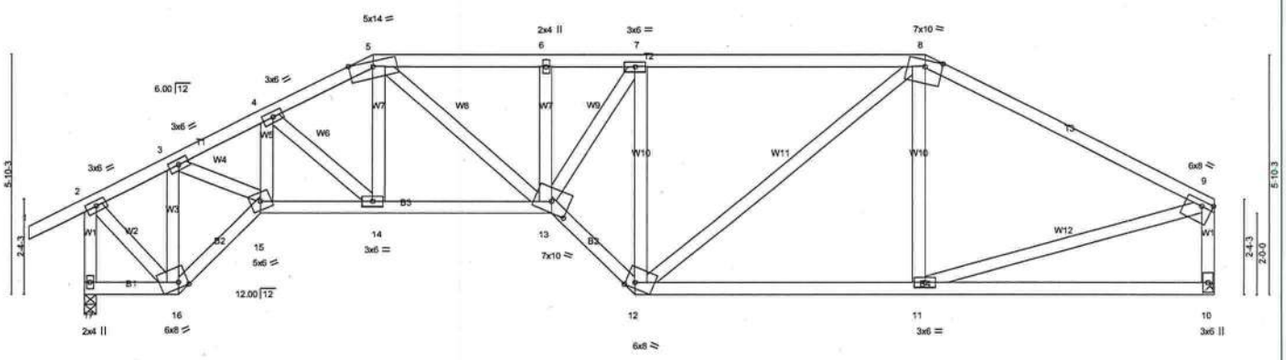

2-3-8	4-3-8	7-0-0	11-4-0	13-4-0	20-4-0	27-4-0
2-3-8	2-0-0	2-8-8	4-4-0	2-0-0	7-0-0	7-0-0

Plate Offsets (X,Y): [9:0-3-0,0-1-8], [12:0-2-11,Edge], [13:0-5-0,0-3-4], [16:0-2-11,Edge]

LOADING (psf)		SPACING	2-0-0	CSI		DEFL	in	(loc)	l/defl	L/d	PLATES	GRIP
TCLL	20.0	Plates Increase	1.25	TC	0.46	Vert(LL)	0.12	13	>999	240	MT20	244/190
TCDL	7.0	Lumber Increase	1.25	BC	0.45	Vert(TL)	-0.20	13-14	>999	180		
BCLL	10.0	Rep Stress Incr	YES	WB	0.74	Horz(TL)	0.12	10	n/a	n/a		
BCDL	5.0	Code FBC2001/TPI2002		(Matrix)							Weight: 175 lb	

LUMBER
TOP CHORD 2 X 4 SYP No.2D
BOT CHORD 2 X 4 SYP No.2D
WEBS 2 X 4 SYP No.3 *Except*
W1 2 X 4 SYP No.2D, W1 2 X 4 SYP No.2D

BRACING
TOP CHORD Structural wood sheathing directly applied or 4-3-6 oc purlins, except end verticals.
BOT CHORD Rigid ceiling directly applied or 6-6-0 oc bracing.

REACTIONS (lb/size) 17=1218/0-3-8, 10=1134/Mechanical
Max Horz 17=199(load case 5)
Max Uplift17=-455(load case 5), 10=-377(load case 3)

FORCES (lb) - Maximum Compression/Maximum Tension
TOP CHORD 1-2=0/36, 2-3=-822/550, 3-4=-2038/1255, 4-5=-1867/1142, 5-6=-2069/1266, 6-7=-2069/1267, 7-8=-1433/945, 8-9=-1325/767, 2-17=-1183/798, 9-10=-1027/672
BOT CHORD 16-17=-151/60, 15-16=-559/906, 14-15=-1009/1798, 13-14=-837/1671, 12-13=-926/1876, 11-12=-552/1111, 10-11=-132/145
WEBS 3-16=-1215/709, 3-15=-684/1302, 4-15=-84/89, 4-14=-180/231, 5-14=-136/256, 5-13=-300/580, 6-13=-96/101, 7-13=-630/1239, 7-12=-1336/758, 8-12=-270/492, 8-11=-88/187, 2-16=-464/948, 9-11=-444/1011

NOTES
1) Unbalanced roof live loads have been considered for this design.
2) Wind: ASCE 7-98; 120mph (3-second gust); h=20ft; TCDL=4.2psf; BCDL=3.0psf; Category II; Exp B; enclosed; MWFRS gable end zone and C-C Exterior(2) zone; end vertical left exposed; Lumber DOL=1.60 plate grip DOL=1.60. This truss is designed for C-C for members and forces, and for MWFRS for reactions specified.
3) Provide adequate drainage to prevent water ponding.
4) Refer to girder(s) for truss to truss connections.
5) Provide mechanical connection (by others) of truss to bearing plate capable of withstanding 455 lb uplift at joint 17 and 377 lb uplift at joint 10.

LOAD CASE(S) Standard

NOVEMBER 14,2005 TRUSS DESIGN ENGINEER:
THOMAS E. MILLER PE 56877, BYRON K. ANDERSON PE 60987
STRUCTURAL ENGINEERING AND INSPECTIONS, INC. EB 9196
16105 N. FLORIDA AVE. STE B, LUTZ, FL 33549

Job	Truss	Truss Type	Qty	Ply	Dwg.#1114051632
L132306	T16	HIP	1	1	Job Reference (optional)

Builders FirstSource, Lake City, Fl 32055 — 6.200 s Jul 13 2005 MiTek Industries, Inc. Tue Sep 27 15:53:05 2005 Page 1

4-7-12	9-0-0	13-8-0	18-4-0	22-8-4	27-4-0
4-7-12	4-4-4	4-8-0	4-8-0	4-4-4	4-7-12

Scale = 1:46.3

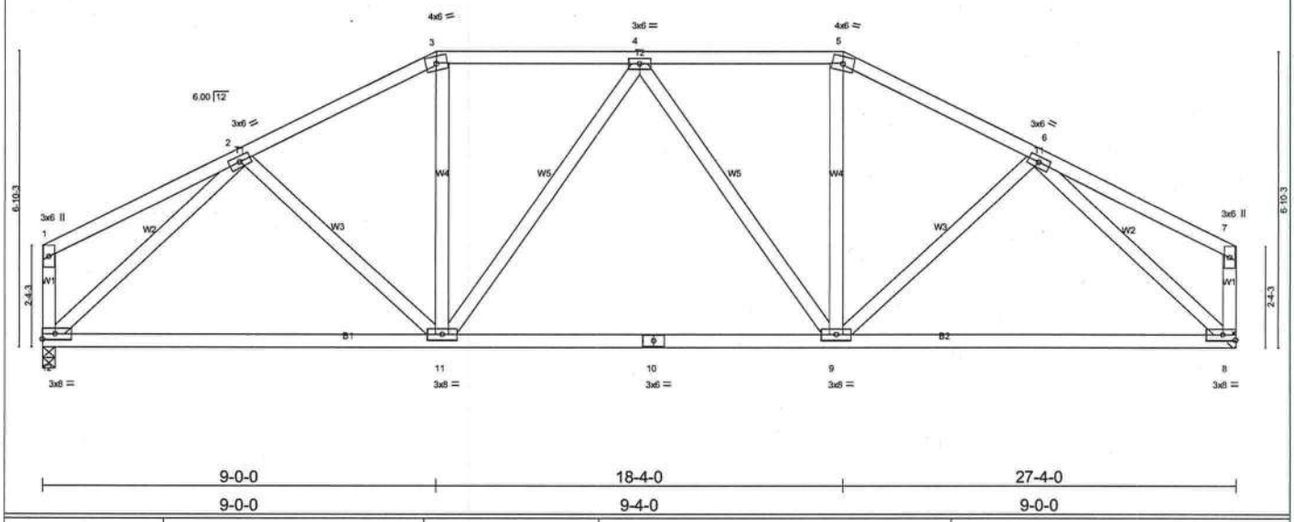

9-0-0	18-4-0	27-4-0
9-0-0	9-4-0	9-0-0

LOADING (psf)		SPACING	2-0-0	CSI		DEFL	in	(loc)	l/defl	L/d	PLATES	GRIP
TCLL	20.0	Plates Increase	1.25	TC	0.34	Vert(LL)	-0.11	9-11	>999	240	MT20	244/190
TCDL	7.0	Lumber Increase	1.25	BC	0.43	Vert(TL)	-0.19	9-11	>999	180		
BCLL	10.0	Rep Stress Incr	YES	WB	0.76	Horz(TL)	0.04	8	n/a	n/a		
BCDL	5.0	Code FBC2001/TPI2002		(Matrix)							Weight: 167 lb	

LUMBER
TOP CHORD 2 X 4 SYP No.2D
BOT CHORD 2 X 4 SYP No.2D
WEBS 2 X 4 SYP No.3 *Except*
W1 2 X 4 SYP No.2D, W1 2 X 4 SYP No.2D

BRACING
TOP CHORD Structural wood sheathing directly applied or 5-9-2 oc purlins, except end verticals.
BOT CHORD Rigid ceiling directly applied or 8-7-7 oc bracing.

REACTIONS (lb/size) 12=1136/0-3-8, 8=1136/Mechanical
Max Horz 12=-105(load case 6)
Max Uplift12=-386(load case 5), 8=-386(load case 6)

FORCES (lb) - Maximum Compression/Maximum Tension
TOP CHORD 1-2=-210/129, 2-3=-1258/825, 3-4=-1086/808, 4-5=-1086/808, 5-6=-1258/825, 6-7=-210/129, 1-12=-196/180, 7-8=-196/180
BOT CHORD 11-12=-571/959, 10-11=-570/1169, 9-10=-570/1169, 8-9=-571/959
WEBS 2-11=-73/254, 3-11=-111/291, 4-11=-229/187, 4-9=-229/187, 5-9=-111/291, 6-9=-73/254, 2-12=-1153/750, 6-8=-1153/750

NOTES
1) Unbalanced roof live loads have been considered for this design.
2) Wind: ASCE 7-98; 120mph (3-second gust); h=20ft; TCDL=4.2psf; BCDL=3.0psf; Category II; Exp B; enclosed; MWFRS gable end zone and C-C Exterior(2) zone; Lumber DOL=1.60 plate grip DOL=1.60. This truss is designed for C-C for members and forces, and for MWFRS for reactions specified.
3) Provide adequate drainage to prevent water ponding.
4) Refer to girder(s) for truss to truss connections.
5) Provide mechanical connection (by others) of truss to bearing plate capable of withstanding 386 lb uplift at joint 12 and 386 lb uplift at joint 8.

LOAD CASE(S) Standard

NOVEMBER 14,2005 TRUSS DESIGN ENGINEER:
THOMAS E. MILLER PE 56877, BYRON K. ANDERSON PE 60987
STRUCTURAL ENGINEERING AND INSPECTIONS, INC. EB 9196
16105 N. FLORIDA AVE. STE B, LUTZ, FL 33549

Job	Truss	Truss Type	Qty	Ply	Dwg.#1114051633
L132306	T17	SPECIAL	1	1	Job Reference (optional)

Builders FirstSource, Lake City, Fl 32055 — 6.200 s Jul 13 2005 MiTek Industries, Inc. Tue Sep 27 15:53:06 2005 Page 1

5-9-4	11-0-0	16-4-0	17-0-0	22-0-4	27-4-0
5-9-4	5-2-12	5-4-0	0-8-0	5-0-4	5-3-12

Scale = 1:46.6

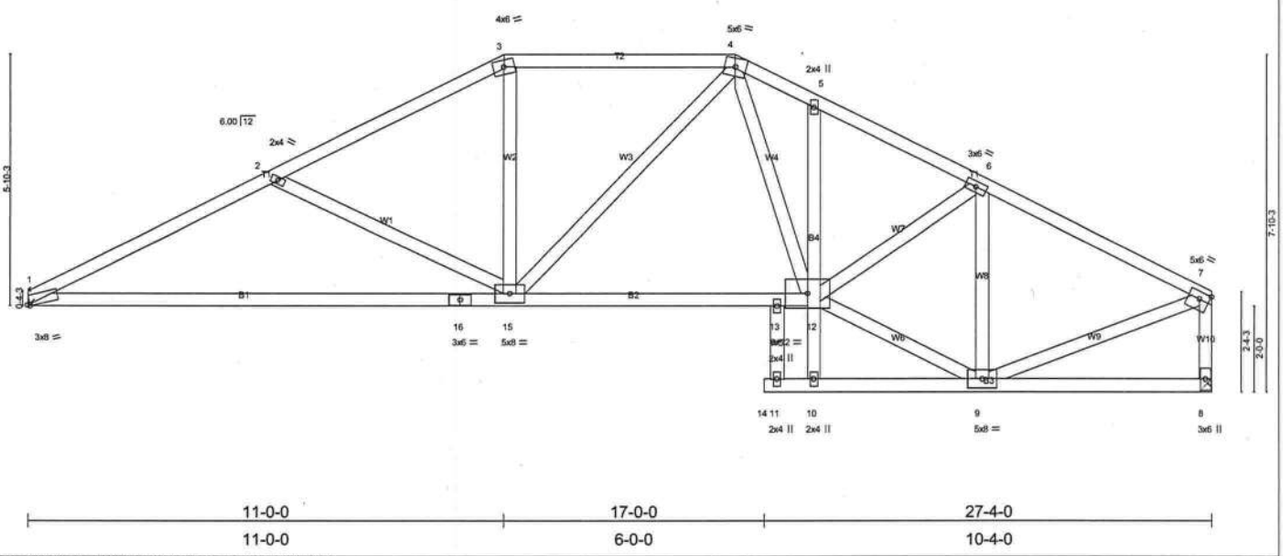

11-0-0	17-0-0	27-4-0
11-0-0	6-0-0	10-4-0

Plate Offsets (X,Y): [1:0-0-10,Edge], [7:0-2-12,0-2-0]

LOADING (psf)		SPACING	2-0-0	CSI		DEFL	in	(loc)	l/defl	L/d	PLATES	GRIP
TCLL	20.0	Plates Increase	1.25	TC	0.43	Vert(LL)	-0.35	1-15	>930	240	MT20	244/190
TCDL	7.0	Lumber Increase	1.25	BC	0.70	Vert(TL)	-0.59	1-15	>546	180		
BCLL	10.0	Rep Stress Incr	YES	WB	0.37	Horz(TL)	0.08	8	n/a	n/a		
BCDL	5.0	Code FBC2001/TPI2002		(Matrix)							Weight: 165 lb	

LUMBER
TOP CHORD 2 X 4 SYP No.2D
BOT CHORD 2 X 4 SYP No.2D *Except*
B4 2 X 4 SYP No.3
WEBS 2 X 4 SYP No.3 *Except*
W10 2 X 4 SYP No.2D

BRACING
TOP CHORD Structural wood sheathing directly applied or 3-11-12 oc purlins, except end verticals.
BOT CHORD Rigid ceiling directly applied or 6-1-11 oc bracing. Except:
1 Row at midpt 5-10

REACTIONS (lb/size) 1=1139/Mechanical, 8=1141/Mechanical
Max Horz 1=135(load case 5)
Max Uplift1=-418(load case 5), 8=-418(load case 6)

FORCES (lb) - Maximum Compression/Maximum Tension
TOP CHORD 1-2=-1978/1298, 2-3=-1638/1040, 3-4=-1412/1015, 4-5=-1663/1200, 5-6=-1722/1125, 6-7=-1235/779, 7-8=-1055/713
BOT CHORD 1-16=-1058/1732, 15-16=-1058/1732, 13-15=-628/1349, 12-13=-628/1349, 10-12=0/97, 5-12=-76/160, 11-14=0/0, 10-11=0/0, 9-10=-23/20, 8-9=-78/95
WEBS 2-15=-376/477, 3-15=-162/424, 4-15=-100/212, 4-12=-351/454, 6-12=-172/538, 6-9=-793/557, 7-9=-564/1029, 11-13=-18/1, 9-12=-649/1156

NOTES
1) Unbalanced roof live loads have been considered for this design.
2) Wind: ASCE 7-98; 120mph (3-second gust); h=20ft; TCDL=4.2psf; BCDL=3.0psf; Category II; Exp B; enclosed; MWFRS gable end zone and C-C Exterior(2) zone; Lumber DOL=1.60 plate grip DOL=1.60. This truss is designed for C-C for members and forces, and for MWFRS for reactions specified.
3) Provide adequate drainage to prevent water ponding.
4) Refer to girder(s) for truss to truss connections.
5) Provide mechanical connection (by others) of truss to bearing plate capable of withstanding 418 lb uplift at joint 1 and 418 lb uplift at joint 8.

LOAD CASE(S) Standard

NOVEMBER 14,2005 TRUSS DESIGN ENGINEER:
THOMAS E. MILLER PE 56877, BYRON K. ANDERSON PE 60987
STRUCTURAL ENGINEERING AND INSPECTIONS, INC. EB 9196
16105 N. FLORIDA AVE. STE B, LUTZ, FL 33549

Job	Truss	Truss Type	Qty	Ply	Dwg.#1114051634
L132306	T18	SPECIAL	1	1	Job Reference (optional)

Builders FirstSource, Lake City, Fl 32055 — 6.200 s Jul 13 2005 MiTek Industries, Inc. Tue Sep 27 15:53:07 2005 Page 1

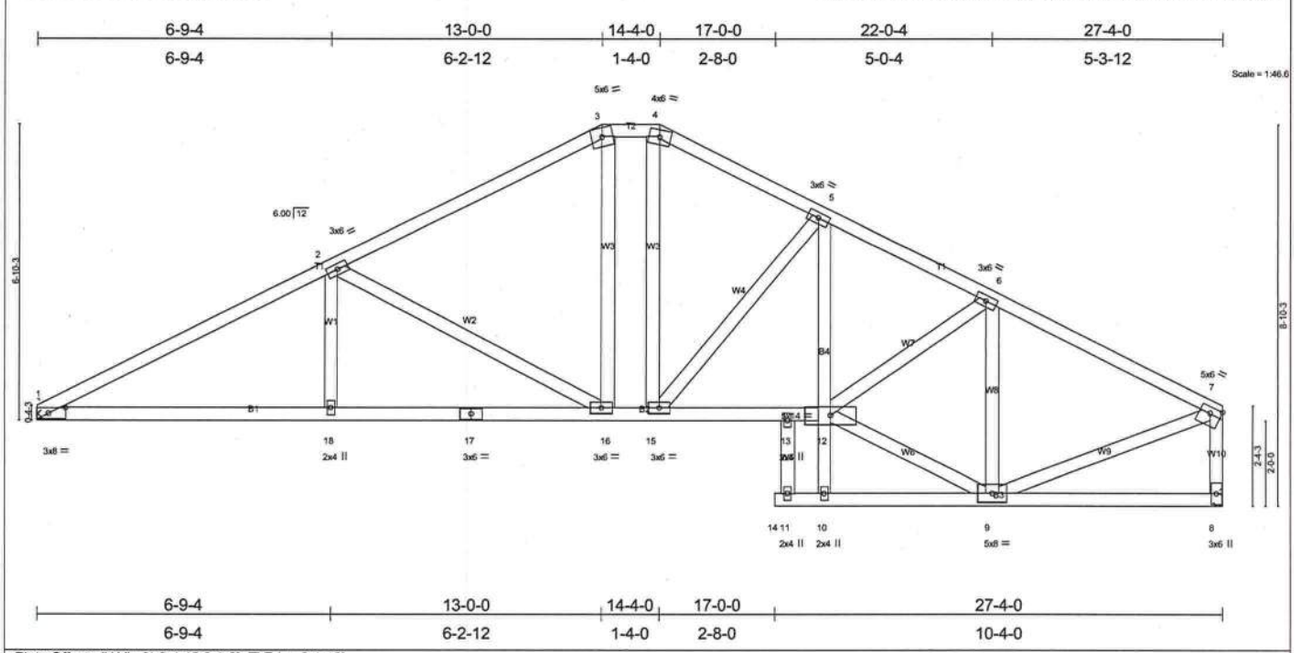

Plate Offsets (X,Y): [1:0-4-12,0-1-8], [7:Edge,0-1-12]

LOADING (psf)		SPACING	2-0-0	CSI		DEFL	in	(loc)	l/defl	L/d	PLATES	GRIP
TCLL	20.0	Plates Increase	1.25	TC	0.44	Vert(LL)	0.12	1-18	>999	240	MT20	244/190
TCDL	7.0	Lumber Increase	1.25	BC	0.51	Vert(TL)	-0.19	1-18	>999	180		
BCLL	10.0	Rep Stress Incr	YES	WB	0.62	Horz(TL)	0.08	8	n/a	n/a		
BCDL	5.0	Code FBC2001/TPI2002		(Matrix)							Weight: 172 lb	

LUMBER
TOP CHORD 2 X 4 SYP No.2D
BOT CHORD 2 X 4 SYP No.2D *Except*
B4 2 X 4 SYP No.3
WEBS 2 X 4 SYP No.3 *Except*
W10 2 X 4 SYP No.2D

BRACING
TOP CHORD Structural wood sheathing directly applied or 4-2-11 oc purlins, except end verticals.
BOT CHORD Rigid ceiling directly applied or 6-0-7 oc bracing.

REACTIONS (lb/size) 1=1139/Mechanical, 8=1141/Mechanical
Max Horz 1=159(load case 5)
Max Uplift1=-440(load case 5), 8=-439(load case 6)

FORCES (lb) - Maximum Compression/Maximum Tension
TOP CHORD 1-2=-2063/1309, 2-3=-1416/1006, 3-4=-1200/992, 4-5=-1374/1034, 5-6=-1721/1182, 6-7=-1234/811, 7-8=-1056/739
BOT CHORD 1-18=-1050/1770, 17-18=-1050/1770, 16-17=-1050/1770, 15-16=-546/1200, 13-15=-801/1497, 12-13=-801/1499, 10-12=0/67, 5-12=-153/358, 11-14=0/0, 10-11=0/0, 9-10=-46/57, 8-9=-80/96
WEBS 2-18=0/249, 2-16=-680/576, 3-16=-171/382, 4-15=-384/481, 5-15=-527/406, 6-12=-206/541, 6-9=-780/574, 7-9=-591/1026, 11-13=-51/56, 9-12=-657/1119

NOTES
1) Unbalanced roof live loads have been considered for this design.
2) Wind: ASCE 7-98; 120mph (3-second gust); h=20ft; TCDL=4.2psf; BCDL=3.0psf; Category II; Exp B; enclosed; MWFRS gable end zone and C-C Exterior(2) zone; Lumber DOL=1.60 plate grip DOL=1.60. This truss is designed for C-C for members and forces, and for MWFRS for reactions specified.
3) Provide adequate drainage to prevent water ponding.
4) Refer to girder(s) for truss to truss connections.
5) Provide mechanical connection (by others) of truss to bearing plate capable of withstanding 440 lb uplift at joint 1 and 439 lb uplift at joint 8.

LOAD CASE(S) Standard

NOVEMBER 14,2005 TRUSS DESIGN ENGINEER:
THOMAS E. MILLER PE 56877, BYRON K. ANDERSON PE 60987
STRUCTURAL ENGINEERING AND INSPECTIONS, INC. EB 9196
16105 N. FLORIDA AVE. STE B, LUTZ, FL 33549

Job	Truss	Truss Type	Qty	Ply	Dwg.#1114051635
L132306	T19	HIP	1	1	Job Reference (optional)

Builders FirstSource, Lake City, Fl 32055 — 6.200 s Jul 13 2005 MiTek Industries, Inc. Tue Sep 27 15:53:08 2005 Page 1

3-9-14	7-0-0	11-10-11	16-9-5	21-8-0	24-10-2	28-8-0
3-9-14	3-2-2	4-10-11	4-10-11	4-10-11	3-2-2	3-9-14

Scale: 1/4"=1'

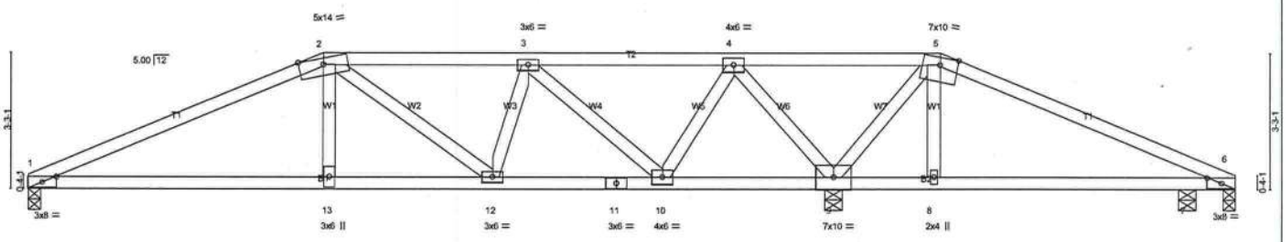

3-9-14	7-0-0	11-0-9	15-1-2	19-1-12	21-8-0	24-10-2	27-6-4	28-8-0
3-9-14	3-2-2	4-0-9	4-0-9	4-0-9	2-6-4	3-2-2	2-8-3	1-1-12

Plate Offsets (X,Y): [1:0-4-2,0-1-8], [6:0-4-2,0-1-8]

LOADING (psf)		SPACING	2-0-0	CSI		DEFL	in	(loc)	l/defl	L/d	PLATES	GRIP
TCLL	20.0	Plates Increase	1.25	TC	0.67	Vert(LL)	0.20	1-13	>999	240	MT20	244/190
TCDL	7.0	Lumber Increase	1.25	BC	0.68	Vert(TL)	-0.23	1-13	>999	180		
BCLL	10.0	Rep Stress Incr	NO	WB	0.74	Horz(TL)	0.05	9	n/a	n/a		
BCDL	5.0	Code FBC2001/TPI2002		(Matrix)							Weight: 128 lb	

LUMBER
TOP CHORD 2 X 4 SYP No.2D
BOT CHORD 2 X 4 SYP No.2D
WEBS 2 X 4 SYP No.3

BRACING
TOP CHORD Structural wood sheathing directly applied or 3-8-7 oc purlins.
BOT CHORD Rigid ceiling directly applied or 5-0-11 oc bracing.

REACTIONS (lb/size) 1=1237/0-3-8, 6=-376/0-3-8, 9=3630/0-4-15, 7=411/0-4-15
Max Horz 1=70(load case 4)
Max Uplift1=-837(load case 4), 6=-376(load case 1), 9=-2315(load case 2), 7=-205(load case 5)
Max Grav 1=1243(load case 6), 6=215(load case 3), 9=3630(load case 1), 7=411(load case 7)

FORCES (lb) - Maximum Compression/Maximum Tension
TOP CHORD 1-2=-2591/1721, 2-3=-1937/1384, 3-4=-583/468, 4-5=-1149/1809, 5-6=-561/791
BOT CHORD 1-13=-1531/2337, 12-13=-1554/2377, 11-12=-1207/1779, 10-11=-1207/1779, 9-10=-236/185, 8-9=-669/542, 7-8=-702/554, 6-7=-702/554
WEBS 2-13=-490/815, 2-12=-552/455, 3-12=-312/584, 3-10=-1647/1155, 4-10=-978/1587, 4-9=-2543/1815, 5-9=-1861/1111, 5-8=-255/678

NOTES
1) Unbalanced roof live loads have been considered for this design.
2) Wind: ASCE 7-98; 120mph (3-second gust); h=20ft; TCDL=4.2psf; BCDL=3.0psf; Category II; Exp B; enclosed; MWFRS gable end zone; porch left and right exposed; Lumber DOL=1.60 plate grip DOL=1.60.
3) Provide adequate drainage to prevent water ponding.
4) Provide mechanical connection (by others) of truss to bearing plate capable of withstanding 837 lb uplift at joint 1, 376 lb uplift at joint 6, 2315 lb uplift at joint 9 and 205 lb uplift at joint 7.
5) Girder carries hip end with 7-0-0 end setback.
6) Hanger(s) or other connection device(s) shall be provided sufficient to support concentrated load(s) 539 lb down and 321 lb up at 21-8-0, and 539 lb down and 321 lb up at 7-0-0 on bottom chord. The design/selection of such connection device(s) is the responsibility of others.
7) In the LOAD CASE(S) section, loads applied to the face of the truss are noted as front (F) or back (B).

LOAD CASE(S) Standard
1) Regular: Lumber Increase=1.25, Plate Increase=1.25
Uniform Loads (plf)
Vert: 1-2=-54, 2-5=-118(F=-64), 5-6=-54, 1-13=-30, 8-13=-65(F=-35), 6-8=-30
Concentrated Loads (lb)
Vert: 13=-539(F) 8=-539(F)

NOVEMBER 14,2005 TRUSS DESIGN ENGINEER:
THOMAS E. MILLER PE 56877, BYRON K. ANDERSON PE 60987
STRUCTURAL ENGINEERING AND INSPECTIONS, INC. EB 9196
16105 N. FLORIDA AVE. STE B, LUTZ, FL 33549

Job	Truss	Truss Type	Qty	Ply	Dwg.#1114051636
L132306	T20	SPECIAL	1	1	Job Reference (optional)

Builders FirstSource, Lake City, Fl 32055 — 6.200 s Jul 13 2005 MiTek Industries, Inc. Tue Sep 27 15:53:08 2005 Page 1

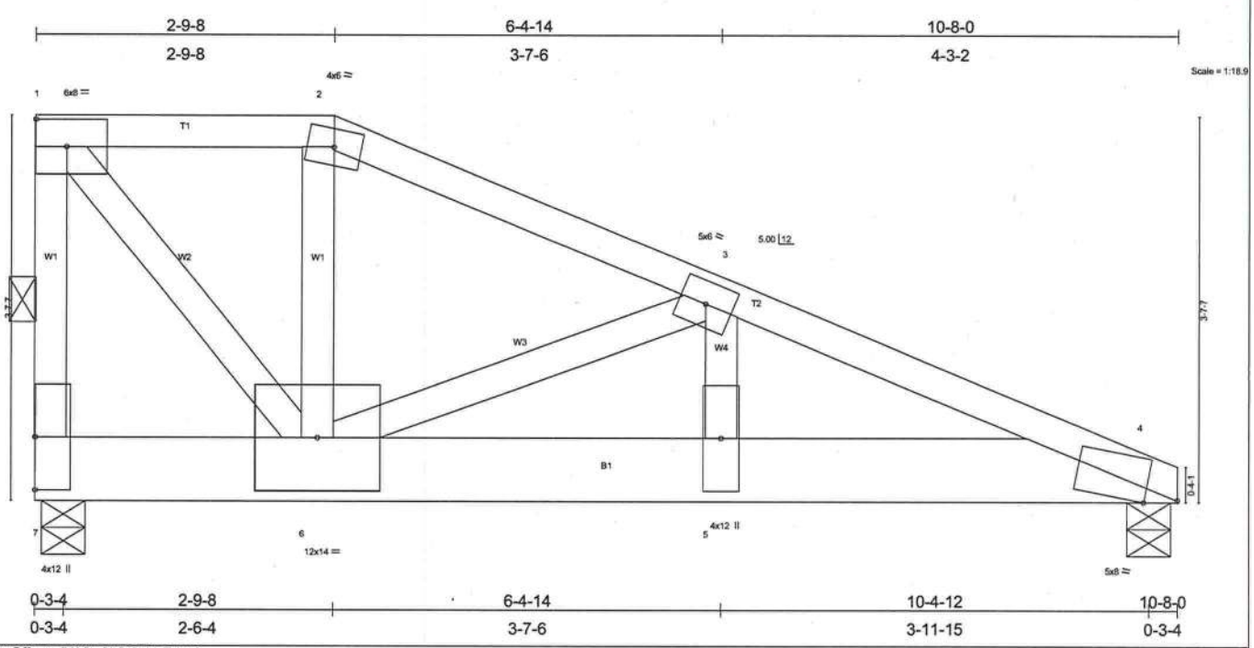

Plate Offsets (X,Y): [4:0-3-11,Edge]

LOADING (psf)		SPACING	2-0-0	CSI		DEFL	in	(loc)	l/defl	L/d	PLATES	GRIP
TCLL	20.0	Plates Increase	1.25	TC	0.55	Vert(LL)	-0.10	5	>999	240	MT20	244/190
TCDL	7.0	Lumber Increase	1.25	BC	0.89	Vert(TL)	-0.15	5-6	>811	180		
BCLL	10.0	Rep Stress Incr	NO	WB	0.90	Horz(TL)	0.03	4	n/a	n/a		
BCDL	5.0	Code FBC2001/TPI2002		(Matrix)							Weight: 71 lb	

LUMBER
TOP CHORD 2 X 4 SYP No.2D
BOT CHORD 2 X 8 SYP No.1D
WEBS 2 X 4 SYP No.3 *Except*
W2 2 X 4 SYP No.2D

BRACING
TOP CHORD Structural wood sheathing directly applied or 2-7-9 oc purlins, except end verticals.
BOT CHORD Rigid ceiling directly applied or 6-1-7 oc bracing.
WEBS 1 Row at midpt 1-7

REACTIONS (lb/size) 7=3132/0-4-15, 4=3132/0-4-15
Max Horz 7=-174(load case 5)
Max Uplift7=-1485(load case 3), 4=-1475(load case 5)

FORCES (lb) - Maximum Compression/Maximum Tension
TOP CHORD 1-7=-2577/1233, 1-2=-2025/976, 2-3=-2188/1006, 3-4=-5086/2366
BOT CHORD 6-7=0/154, 5-6=-2141/4681, 4-5=-2141/4681
WEBS 1-6=-1544/3194, 2-6=-288/653, 3-6=-2935/1475, 3-5=-919/2053

NOTES
1) Wind: ASCE 7-98; 120mph (3-second gust); h=20ft; TCDL=4.2psf; BCDL=3.0psf; Category II; Exp B; enclosed; MWFRS gable end zone; Lumber DOL=1.60 plate grip DOL=1.60.
2) Provide adequate drainage to prevent water ponding.
3) Provide mechanical connection (by others) of truss to bearing plate capable of withstanding 1485 lb uplift at joint 7 and 1475 lb uplift at joint 4.
4) Girder carries tie-in span(s): 27-4-0 from 0-0-0 to 10-8-0
5) In the LOAD CASE(S) section, loads applied to the face of the truss are noted as front (F) or back (B).

LOAD CASE(S) Standard
1) Regular: Lumber Increase=1.25, Plate Increase=1.25
Uniform Loads (plf)
Vert: 1-2=-54, 2-4=-54, 4-7=-553(F=-523)

NOVEMBER 14,2005 TRUSS DESIGN ENGINEER:
THOMAS E. MILLER PE 56877, BYRON K. ANDERSON PE 60987
STRUCTURAL ENGINEERING AND INSPECTIONS, INC. EB 9196
16105 N. FLORIDA AVE. STE B, LUTZ, FL 33549

Job	Truss	Truss Type	Qty	Ply	Dwg.#1114051637
L132306	T21	COMMON	1	2	Job Reference (optional)

Builders FirstSource, Lake City, Fl 32055

6.200 s Jul 13 2005 MiTek Industries, Inc. Tue Sep 27 15:53:09 2005 Page 1

-1-4-0	5-9-4	11-0-0	16-2-12	22-0-0
1-4-0	5-9-4	5-2-12	5-2-12	5-9-4

Scale = 1:38.3

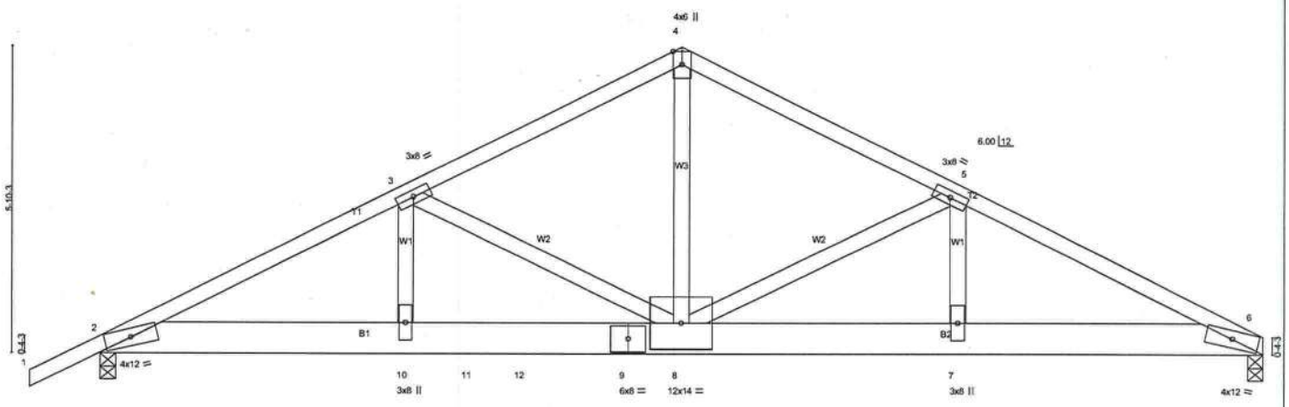

5-9-4	7-0-0	11-0-0	16-2-12	22-0-0
5-9-4	1-2-12	4-0-0	5-2-12	5-9-4

LOADING (psf)		SPACING	2-0-0	CSI		DEFL	in	(loc)	l/defl	L/d	PLATES	GRIP
TCLL	20.0	Plates Increase	1.25	TC	0.56	Vert(LL)	-0.22	8-10	>999	240	MT20	244/190
TCDL	7.0	Lumber Increase	1.25	BC	0.96	Vert(TL)	-0.35	8-10	>744	180		
BCLL	10.0	Rep Stress Incr	NO	WB	0.60	Horz(TL)	-0.08	2	n/a	n/a		
BCDL	5.0	Code FBC2001/TPI2002		(Matrix)							Weight: 275 lb	

LUMBER
TOP CHORD 2 X 4 SYP No.2D
BOT CHORD 2 X 8 SYP No.1D
WEBS 2 X 4 SYP No.3 *Except*
W3 2 X 4 SYP No.2D

BRACING
TOP CHORD Structural wood sheathing directly applied or 3-7-11 oc purlins.
BOT CHORD Rigid ceiling directly applied or 9-2-3 oc bracing.

REACTIONS (lb/size) 6=6686/0-3-8, 2=5087/0-3-8
Max Horz 6=188(load case 5)
Max Uplift6=-3142(load case 4), 2=-2437(load case 5)

FORCES (lb) - Maximum Compression/Maximum Tension
TOP CHORD 4-5=-8105/3812, 5-6=-11511/5375, 1-2=0/37, 2-3=-10927/5062, 3-4=-8089/3818
BOT CHORD 2-10=-4397/9733, 10-11=-4397/9733, 11-12=-4397/9733, 9-12=-4397/9733, 8-9=-4397/9733, 7-8=-4850/10286, 6-7=-4850/10286
WEBS 5-7=-1310/2815, 5-8=-3510/1787, 4-8=-3194/6863, 3-8=-2883/1468, 3-10=-999/2301

NOTES
1) 2-ply truss to be connected together with 0.131"x3" Nails as follows:
Top chords connected as follows: 2 X 4 - 1 row at 0-9-0 oc.
Bottom chords connected as follows: 2 X 8 - 2 rows at 0-4-0 oc.
Webs connected as follows: 2 X 4 - 1 row at 0-9-0 oc.
2) All loads are considered equally applied to all plies, except if noted as front (F) or back (B) face in the LOAD CASE(S) section. Ply to ply connections have been provided to distribute only loads noted as (F) or (B), unless otherwise indicated.
3) Unbalanced roof live loads have been considered for this design.
4) Wind: ASCE 7-98; 120mph (3-second gust); h=20ft; TCDL=4.2psf; BCDL=3.0psf; Category II; Exp B; enclosed; MWFRS gable end zone; Lumber DOL=1.60 plate grip DOL=1.60.
5) Provide mechanical connection (by others) of truss to bearing plate capable of withstanding 3142 lb uplift at joint 6 and 2437 lb uplift at joint 2.
6) Girder carries tie-in span(s): 27-4-0 from 8-0-0 to 22-0-0
7) Hanger(s) or other connection device(s) shall be provided sufficient to support concentrated load(s) 2584 lb down and 1245 lb up at 7-0-0 on bottom chord. The design/selection of such connection device(s) is the responsibility of others.

LOAD CASE(S) Standard
1) Regular: Lumber Increase=1.25, Plate Increase=1.25
Uniform Loads (plf)
Vert: 4-6=-54, 1-4=-54, 2-12=-30, 6-12=-556(F=-526)
Concentrated Loads (lb)
Vert: 11=-2584(F)

NOVEMBER 14,2005 TRUSS DESIGN ENGINEER:
THOMAS E. MILLER PE 56877, BYRON K. ANDERSON PE 60987
STRUCTURAL ENGINEERING AND INSPECTIONS, INC. EB 9196
16105 N. FLORIDA AVE. STE B, LUTZ, FL 33549

Symbols

PLATE LOCATION AND ORIENTATION

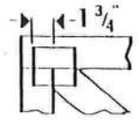

* Center plate on joint unless dimensions indicate otherwise. Dimensions are in inches. Apply plates to both sides of truss and securely seal.

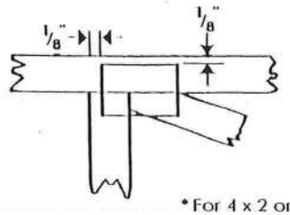

* For 4 x 2 orientation, locate plates 1/8" from outside edge of truss and vertical web.

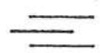

* This symbol indicates the required direction of slots in connector plates.

PLATE SIZE

4 x 4

The first dimension is the width perpendicular to slots. Second dimension is the length parallel to slots.

LATERAL BRACING

Indicates location of required continuous lateral bracing.

BEARING

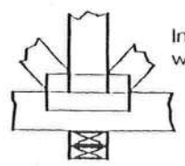

Indicates location of joints at which bearings (supports) occur.

Numbering System

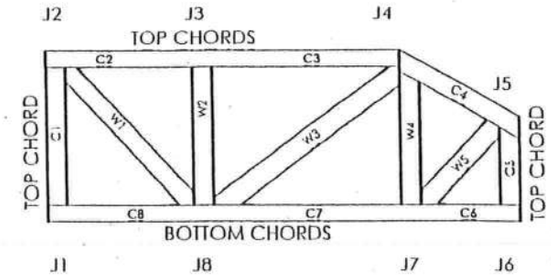

JOINTS AND CHORDS ARE NUMBERED CLOCKWISE AROUND THE TRUSS STARTING AT THE LOWEST JOINT FARTHEST TO THE LEFT.

WEBS ARE NUMBERED FROM LEFT TO RIGHT

CONNECTOR PLATE CODE APPROVALS

BOCA	96-31, 96-67
ICBO	3907, 4922
SBCCI	9667, 9432A
WISC/DILHR	960022-W, 970036-N
NER	561

MiTek Engineering Reference Sheet: MII-7473

General Safety Notes

Failure to Follow Could Cause Property Damage or Personal Injury

1. Provide copies of this truss design to the building designer, erection supervisor, property owner and all other interested parties.
2. Cut members to bear tightly against each other.
3. Place plates on each face of truss at each joint and embed fully. Avoid knots and wane at joint locations.
4. Unless otherwise noted, locate chord splices at ¼ panel length (± 6" from adjacent joint.)
5. Unless otherwise noted, moisture content of lumber shall not exceed 19% at time of fabrication.
6. Unless expressly noted, this design is not applicable for use with fire retardant or preservative treated lumber.
7. Camber is a non-structural consideration and is the responsibility of truss fabricator. General practice is to camber for dead load deflection.
8. Plate type, size and location dimensions shown indicate minimum plating requirements.
9. Lumber shall be of the species and size, and in all respects, equal to or better than the grade specified.
10. Top chords must be sheathed or purlins provided at spacing shown on design.
11. Bottom chords require lateral bracing at 10 ft. spacing, or less, if no ceiling is installed, unless otherwise noted.
12. Anchorage and / or load transferring connections to trusses are the responsibility of others unless shown.
13. Do not overload roof or floor trusses with stacks of construction materials.
14. Do not cut or alter truss member or plate without prior approval of a professional engineer.
15. Care should be exercised in handling, erection and installation of trusses.

© 1993 MiTek® Holdings, Inc.

Lot 5c
Emerald Forest

COLUMBIA COUNTY BUILDING DEPARTMENT

RESIDENTIAL MINIMUM PLAN REQUIREMENTS AND CHECKLIST FOR FLORIDA BUILDING CODE 2001
ONE (1) AND TWO (2) FAMILY DWELLINGS

ALL REQUIREMENTS ARE SUBJECT TO CHANGE
EFFECTIVE MARCH 1, 2002

ALL BUILDING PLANS MUST INDICATE THE FOLLOWING ITEMS AND INDICATE COMPLIANCE WITH CHAPTER 1606 OF THE FLORIDA BUILDING CODE 2001 BY PROVIDING CALCULATIONS AND DETAILS THAT HAVE THE SEAL AND SIGNATURE OF A CERTIFIED ARCHITECT OR ENGINEER REGISTERED IN THE STATE OF FLORIDA, OR ALTERNATE METHODOLOGIES, APPROVED BY THE STATE OF FLORIDA BUILDING COMMISSION FOR ONE-AND-TWO FAMILY DWELLINGS. FOR DESIGN PURPOSES THE FOLLOWING BASIC WIND SPEED AS PER FIGURE 1606 SHALL BE USED.

WIND SPEED LINE SHALL BE DEFINED AS FOLLOWS: THE CENTERLINE OF INTERSTATE 75.

1. ALL BUILDINGS CONSTRUCTED EAST OF SAID LINE SHALL BE ------- 100 MPH
2. ALL BUILDINGS CONSTRUCTED WEST OF SAID LINE SHALL BE --------110 MPH
3. NO AREA IN COLUMBIA COUNTY IS IN A WIND BORNE DEBRIS REGION

APPLICANT – PLEASE CHECK ALL APPLICABLE BOXES BEFORE SUBMITTAL

GENERAL REQUIREMENTS: Two (2) complete sets of plans containing the following:

Applicant	Plans Examiner	
☑	☐	All drawings must be clear, concise and drawn to scale ("Optional " details that are not used shall be marked void or crossed off). Square footage of different areas shall be shown on plans.
☑	☐	Designers name and signature on document (FBC 104.2.1). If licensed architect or engineer, official seal shall be affixed.
☑	☐	**Site Plan including:** a) Dimensions of lot b) Dimensions of building set backs c) Location of all other buildings on lot, well and septic tank if applicable, and all utility easements. d) Provide a full legal description of property.
☑	☐	**Wind-load Engineering Summary, calculations and any details required** a) Plans or specifications must state compliance with FBC Section 1606 b) The following information must be shown as per section 1606.1.7 FBC a. Basic wind speed (MPH) b. Wind importance factor (I) and building category c. Wind exposure – if more than one wind exposure is used, the wind exposure and applicable wind direction shall be indicated d. The applicable internal pressure coefficient e. Components and Cladding. The design wind pressure in terms of psf (kN/m²), to be used for the design of exterior component and cladding materials not specifally designed by the registered design professional
☑	☐	**Elevations including:**
☑	☐	a) All sides
☑	☐	b) Roof pitch
☑	☐	c) Overhang dimensions and detail with attic ventilation
☑	☐	d) Location, size and height above roof of chimneys
☑	☐	e) Location and size of skylights
☑	☐	f) Building height
☑	☐	e) Number of stories

Floor Plan including:

a) Rooms labeled and dimensioned

b) Shear walls

c) Windows and doors (including garage doors) showing size, mfg., approval listing and attachment specs. (FBC 1707) and safety glazing where needed (egress windows in bedrooms to be shown)

d) Fireplaces (gas appliance) (vented or non-vented) or wood burning with hearth

e) Stairs with dimensions (width, tread and riser) and details of guardrails and handrails

f) Must show and identify accessibility requirements (accesssable bathroom)

Foundation Plan including:

a) Location of all load-bearing wall with required footings indicated as standard Or monolithic and dimensions and reinforcing

b) All posts and/or column footing including size and reinforcing

c) Any special support required by soil analysis such as piling

d) Location of any vertical steel

Roof System:

a) Truss package including:

1. Truss layout and truss details signed and sealed by Fl. Pro. Eng.
2. Roof assembly (FBC 104.2.1 Roofing system, materials, manufacturer, fastening requirements and product evaluation with wind resistance rating)

b) Conventional Framing Layout including:

1. Rafter size, species and spacing
2. Attachment to wall and uplift
3. Ridge beam sized and valley framing and support details
4. Roof assembly (FBC 104.2.1 Roofing systems, materials, manufacturer, fastening requirements and product evaluation with wind resistance rating)

Wall Sections including:

a) Masonry wall

1. All materials making up wall
2. Block size and mortar type with size and spacing of reinforcement
3. Lintel, tie-beam sizes and reinforcement
4. Gable ends with rake beams showing reinforcement or gable truss and wall bracing details
5. All required connectors with uplift rating and required number and size of fasteners for continuous tie from roof to foundation
6. Roof assembly shown here or on roof system detail (FBC 104.2.1 Roofing system, materials, manufacturer, fastening requirements and product evaluation with resistance rating)
7. Fire resistant construction (if required)
8. Fireproofing requirements
9. Shoe type of termite treatment (termiticide or alternative method)
10. Slab on grade
    a. Vapor retarder (6mil. Polyethylene with joints lapped 6 inches and sealed)
    b. Must show control joints, synthetic fiber reinforcement or Welded fire fabric reinforcement and supports
11. Indicate where pressure treated wood will be placed
12. Provide insulation R value for the following:
    a. Attic space
    b. Exterior wall cavity
    c. Crawl space (if applicable)

☐ ☑ b) Wood frame wall

1. All materials making up wall
2. Size and species of studs
3. Sheathing size, type and nailing schedule
4. Headers sized
5. Gable end showing balloon framing detail or gable truss and wall hinge bracing detail
6. All required fasteners for continuous tie from roof to foundation (truss anchors, straps, anchor bolts and washers)
7. Roof assembly shown here or on roof system detail (FBC104.2.1 Roofing system, materials, manufacturer, fastening requirements and product evaluation with wind resistance rating)
8. Fire resistant construction (if applicable)
9. Fireproofing requirements
10. Show type of termite treatment (termiticide or alternative method)
11. Slab on grade
    a. Vapor retarder (6Mil. Polyethylene with joints lapped 6 inches and sealed
    b. Must show control joints, synthetic fiber reinforcement or welded wire fabric reinforcement and supports
12. Indicate where pressure treated wood will be placed
13. Provide insulation R value for the following:
    a. Attic space
    b. Exterior wall cavity
    c. Crawl space (if applicable)

☐ ☐ c) Metal frame wall and roof (designed, signed and sealed by Florida Prof. Engineer or Architect)

Floor Framing System:

☑ ☑ a) Floor truss package including layout and details, signed and sealed by Florida Registered Professional Engineer

☐ ☐ b) Floor joist size and spacing

☑ ☐ c) Girder size and spacing

☑ ☐ d) Attachment of joist to girder

☐ ☑ e) Wind load requirements where applicable

Plumbing Fixture layout

Electrical layout including:

☑ ☑ a) Switches, outlets/receptacles, lighting and all required GFCI outlets identified

☐ ☑ b) Ceiling fans

☑ ☑ c) Smoke detectors

☑ ☑ d) Service panel and sub-panel size and location(s)

☑ ☑ e) Meter location with type of service entrance (overhead or underground)

☑ ☑ f) Appliances and HVAC equipment

HVAC information

☑ ☑ a) Manual J sizing equipment or equivalent computation

☐ ☑ b) Exhaust fans in bathroom

☑ ☑ **Energy Calculations** (dimensions shall match plans)

☐ ☐ **Gas System** Type (LP or Natural) Location and BTU demand of equipment

Disclosure Statement for Owner Builders

Notice Of Commencement

Private Potable Water

a) Size of pump motor

b) Size of pressure tank

c) Cycle stop valve if used

NOTES:

1. TESTED TO POSITIVE AND NEGATIVE 40 PSF DESIGN AND POSITIVE AND NEGATIVE 30 PSF TEST PRESSURE PER ASTM E-330
2. MAXIMUM SECTION HEIGHT= 8'
3. SECTION HEIGHTS OF 6'6" AND 7'0" ARE ACCEPTABLE AND MAY BE USED IN ANY COMBINATION TO ACHIEVE TOTAL DOOR HEIGHT.
4. WINDOWS MAY BE INSTALLED IN THE TOP SECTION ONLY WITH TOP AND SIDES OF WINDOWS ON OR AT THE SECTION IMMEDIATELY BELOW THE TOP SECTION.
5. MAXIMUM LENGTH OF ROLLER DOOR TO BE 16'-0" AS TESTED
6. THE STRUT PLACEMENT ON DOOR MUST BE COORDINATED WITH THE DOOR DESIGN
7. STRUTS REQUIRED AT ALL CONTACTS WITH TOP SECTION
8. QUANTITY OF SIDE LEGS CAN BE 5, 6, OR 7 AS TESTED.
9. ▲ DROP IN TYPE OF INSULATION IS OPTIONAL

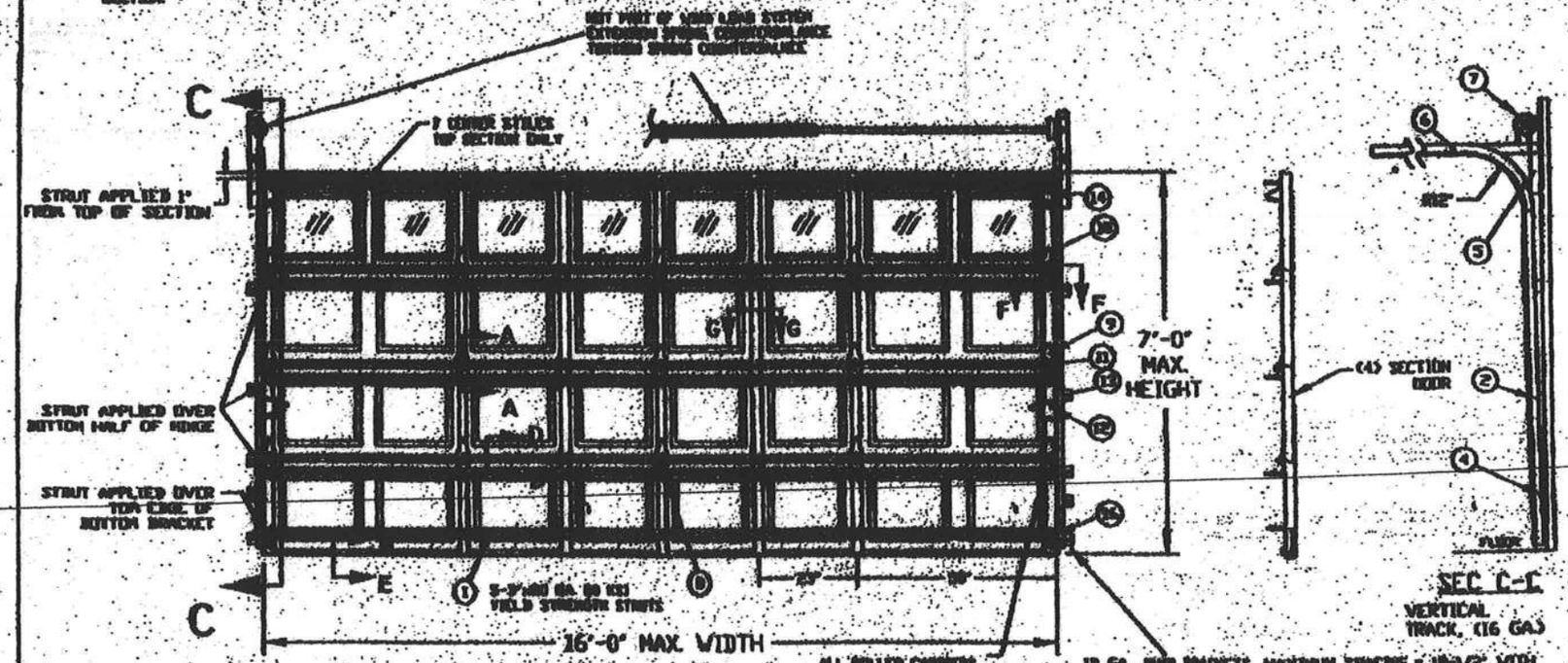

INSIDE ELEVATION

PE No. 0040800 SEAL

REPORT No. 2202

TEST REPORTS ON FILE VIEWED 10/10/00 [illegible]

DESIGN LOAD +20.0 PSF & -20.0 PSF
TEST LOAD +30.0 PSF & -30.0 PSF

GARDO DOORS
SERIES 7400, EXTERIOR STEEL =.017 MIN GAS TESTED
SERIES 7500, EXTERIOR STEEL =.019" MIN ▲
SERIES 7524, EXTERIOR STEEL =.024" MIN ▲
CLOSED WITH WINDOWS

MAXIMUM DOOR WIDTH	MAXIMUM DOOR HEIGHT	TYPICAL COR. STILE SPACING	STRUTS PER SEC. SIZE	STRUTS PER SEC. QTY.	VERTICAL TRACK
16'	7'	23"	3"	5	2 IN.

GENERAL AMERICAN DOOR COMPANY
3400 BASELINE ROAD
MONTGOMERY, IL 60538

DATE 10-29-03 | DRAWN BY [illegible] | DRAWN BY [illegible] | REVISED (A) 11-19-03

DESCRIPTION: 16' X 7' INS. RAISED PANEL STEEL DOOR -WINDOWS- 40 PSF

PAGE 1 OF 2 | DRAWING NUMBER V13220-1

SEC A-A
SEC E-E
SEC F-F
SEC J-J
SEC D-D
FASTENER ARRANGEMENT
SEAL
PER ASL 000320

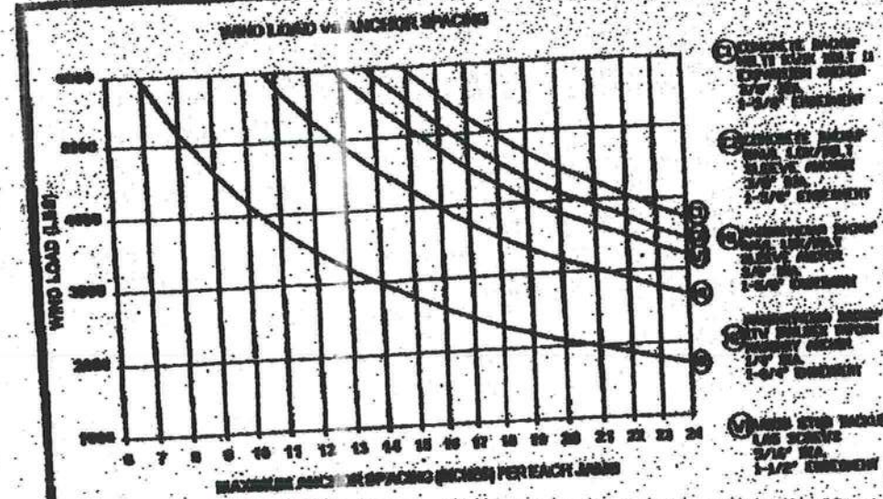

DESIGN LOAD (LBS)/FT² X GARAGE DOOR AREA(WIDTH-FT X HEIGHT-FT) = WIND LOAD(LBS)

EXAMPLE

30 LBS/FT² X 16 FT WIDE X 8 FT HIGH = 3840 LBS

- USE 22" SPACING
- USE 21" SPACING
- USE 19" SPACING
- USE 16" SPACING
- USE 10" SPACING

SEE NOTE 8 FOR ADDITIONAL REQUIRED 2X6 VOID JAMB ANCHORS

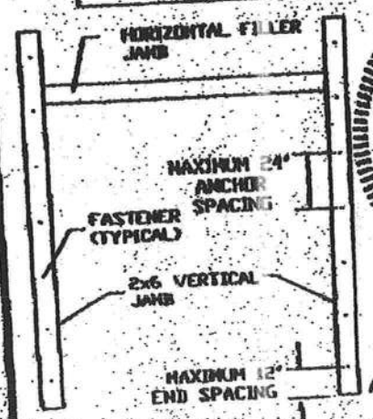

NORTH CAROLINA PROFESSIONAL SEAL PE No. 024280 ENGINEER NASER R KEYVAN

NASER R KEYVAN LICENSE NO. 52774 STATE OF FLORIDA PROFESSIONAL ENGINEER

3/8/2002

2x6 JAMB TO SUPPORTING STRUCTURE ATTACHMENT

2x6 PRESSURE TREATED (GRADE #2 OR BETTER SOUTHERN PINE) VOID JAMB SHALL BE ANCHORED TO BUILDING WOOD FRAME, GROUTED AND REINFORCED CONCRETE MASONRY UNIT (CMU) WALLS OR COLUMNS, OR REINFORCED CONCRETE COLUMNS.

NOTES:

1) ALL DOOR OPENING SURROUNDING STRUCTURE TO BE DESIGNED BY REGISTERED ENGINEER OR ARCHITECT WITH DUE CONSIDERATION GIVEN TO INSTALLATIONS USING CENTER "HURRICANE" PRESTE.

2) ALL DOOR OPENING STRUCTURE AND FASTENERS TO COMPLY WITH ALL APPLICABLE CODES INCLUDING SBCCI "STANDARD FOR HURRICANE RESISTANT RESIDENTIAL CONSTRUCTION SSTD 10," CURRENT EDITION.

3) ALL FASTENERS TO BE INSTALLED IN STRICT ACCORDANCE WITH MANUFACTURER'S SPECIFICATIONS, INSTRUCTIONS AND RECOMMENDATIONS.

4) [illegible] STUDS AT EACH SIDE OF DOOR OPENING SHALL BE PROPERLY SECURED, CONNECTED, ANCHORED AND SHALL CONSIST OF A MINIMUM OF THREE CD LAMINATIONS OF 2X6 PRESSURE TREATED SOUTHERN PINE #2 GRADE OR BETTER WALL STUDS CONTINUOUS FROM FOOTING TO DOUBLE TOP PLATE.

5) REINFORCED CMU OR CONCRETE 2X6 VOID JAMB SHALL BE ANCHORED TO SOLIDLY GROUTED AND REINFORCED CONCRETE MASONRY UNIT (CMU) WALLS OR COLUMNS, OR REINFORCED CONCRETE COLUMNS. ANCHOR SPACING AND EMBEDMENT IS BASED ON CONCRETE MASONRY UNITS COMPLYING WITH ASTM C90 WITH A MINIMUM NET AREA COMPRESSIVE STRENGTH OF 2000 PSI, GROUT WITH A MINIMUM COMPRESSIVE STRENGTH OF 3000 PSI; REINFORCED CONCRETE COLUMNS WITH A MINIMUM COMPRESSIVE STRENGTH OF 2500 PSI.

6) EMBEDMENTS LISTED ARE THE MINIMUM ALLOWABLE EMBEDMENTS.

7) ANCHORS FOR CONCRETE AND CONCRETE MASONRY UNITS (CMU) SHALL HAVE A MINIMUM 3" EDGE DISTANCE FROM ALL EDGES OF CONCRETE OR CONCRETE MASONRY UNITS. ANCHORS FOR CONCRETE AND CMU SHALL HAVE A MINIMUM SPACING OF 3-3/4"

8) LAG SCREWS SHALL BE CENTERED IN ONE OF THE 1-1/2" DIMENSION FACES OF THE TRIPLE 2X6 WALL STUDS.

9) WASHERS ARE REQUIRED ON ALL FASTENERS.

10) THE WIND LOAD VS. ANCHOR SPACING CHART IS FOR A MAXIMUM DOOR SIZE OF 16' X 8' AT A MAXIMUM 42 PSF DESIGN WIND LOAD.

11) FOR THE UPPER THREE INDIVIDUAL STEEL JAMB BRACKETS, BRACKETS SHALL BE CENTERED BETWEEN THE TWO CLOSEST 2X6 VOID JAMB ANCHORS. IF THE STEEL JAMB BRACKET IS NOT CENTERED BETWEEN THE TWO CLOSEST 2X6 VOID JAMB ANCHORS, ADD AN ADDITIONAL 2X6 VOID JAMB ANCHOR NEAR THAT STEEL BRACKET TO ENSURE THAT THE LOAD FROM THE STEEL BRACKET IS EQUALLY TRANSFERRED TO TWO VOID JAMB ANCHORS.

GENERAL AMERICAN DOOR COMPANY
[illegible] BASELINE ROAD
MONTGOMERY, IL 60538

SCALE: NONE	DRAWN BY: BV
DATE: 1-22-97	
JAMB TO STRUCTURE ATTACHMENT FOR VOID LOADED GARAGE DOORS	
DRAWING NUMBER: AL-[illegible]	

TAMKO®
ROOFING PRODUCTS

FEB - 4 REC'D

January 31, 2002

TO: OUR FLORIDA CUSTOMERS:

Effective February 1, 2002, the following TAMKO shingles, as manufactured at TAMKO's Tuscaloosa, Alabama, facility, comply with ASTM D-3161, Type I modified to 110 mph. Testing was conducted using four nails per shingle. These shingles also comply with Florida Building Code TAS 100 for wind driven rain.

- Glass-Seal AR
- Elite Glass-Seal AR
- ASTM Heritage 30 AR (formerly ASTM Heritage 25 AR)
- Heritage 40 AR (formerly Heritage 30 AR)
- Heritage 50 AR (formerly Heritage 40 AR)

All testing was performed by Florida State certified independent labs.

Please direct all questions to TAMKO's Technical Services Department at 1-800-641-4691.

TAMKO Roofing Products, Inc.

CORPORATE HEADQUARTERS
220 W. FOURTH STREET P.O. BOX 1404 JOPLIN, MO 64802-1404 800-641-4691 FAX 800-641-1925

TAMKO
ROOFING PRODUCTS

Application Instructions For Heritage® 25 Series Shingles

SPECIFICATIONS (APPROX.)	
Length	37"
Width	12"
Bundles per Sq.	3
Shingles per Sq.	78
Shingles per Bundle	26
Coverage per Sq. (Sq. Ft.)	100
Exposure	5"

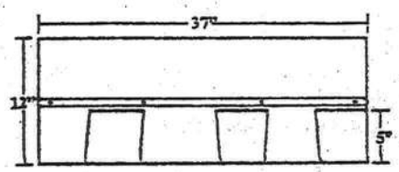

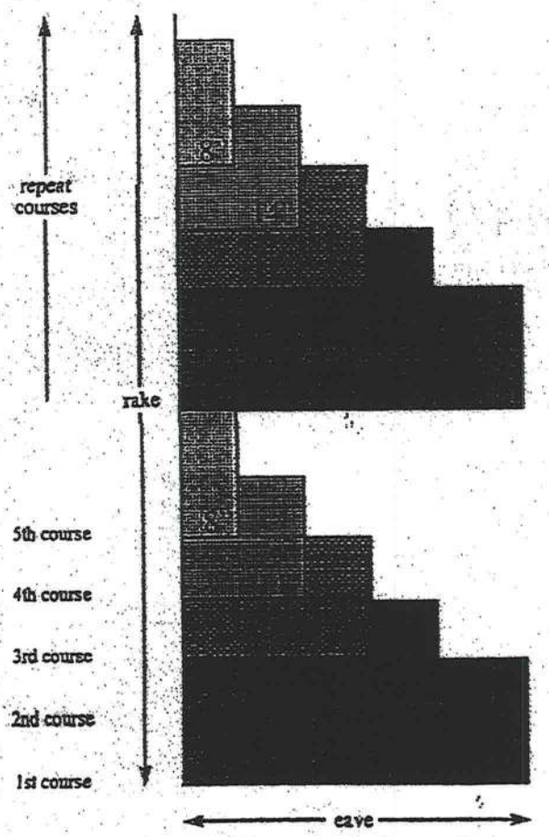

The 4 cuts in the first 10 courses:

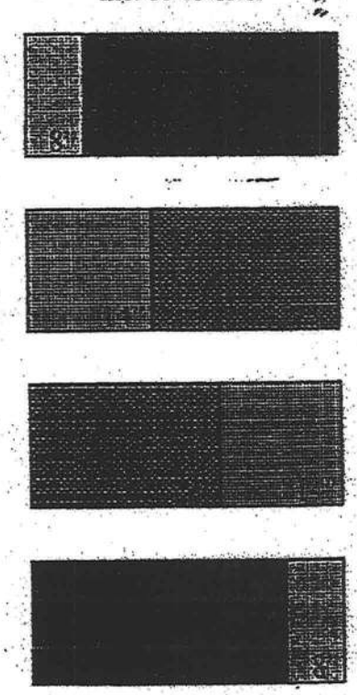

In the first 10 courses, there are 4 cuts and no waste.

When you reach the other side of the roof, whatever has to be trimmed off can be used in the field of roofing.

For additional application information consult the application instructions printed on the product package.

NOTE: These application instructions apply only to Heritage 25 and Heritage 25 AR shingles.

TAMKO®
ROOFING PRODUCTS

Application Instructions for

• Glass-Seal • Elite Glass-Seal®
• Glass-Seal AR • Elite Glass-Seal® AR

THREE-TAB ASPHALT SHINGLES

THESE ARE THE MANUFACTURER'S APPLICATION INSTRUCTIONS FOR THE ROOFING CONDITIONS DESCRIBED. TAMKO ROOFING PRODUCTS, INC. ASSUMES NO RESPONSIBILITY FOR LEAKS OR OTHER ROOFING DEFECTS RESULTING FROM FAILURE TO FOLLOW THE MANUFACTURER'S INSTRUCTIONS.
THIS PRODUCT IS COVERED BY A LIMITED WARRANTY, THE TERMS OF WHICH ARE PRINTED ON THE WRAPPER.
IN COLD WEATHER (BELOW 40°F), CARE MUST BE TAKEN TO AVOID DAMAGE TO THE EDGES AND CORNERS OF THE SHINGLES.

IMPORTANT: It is not necessary to remove the plastic strip from the back of the shingles.

1. ROOF DECK

These shingles are for application to roof decks capable of receiving and retaining fasteners, and to inclines of not less than 2 in. per foot. For roofs having pitches 2 in. per foot to less than 4 in. per foot, refer to special instructions titled "Low Slope Application". Shingles must be applied properly. TAMKO assumes no responsibility for leaks or defects resulting from improper application, or failure to properly prepare the surface to be roofed over.

NEW ROOF DECK CONSTRUCTION: Roof deck must be smooth, dry and free from warped surfaces. It is recommended that metal drip edges be installed at eaves and rakes.

PLYWOOD: All plywood shall be exterior grade as defined by the American Plywood Association. Plywood shall be a minimum of 3/8 in. thickness and applied in accordance with the recommendations of the American Plywood Association.

SHEATHING BOARDS: Boards shall be well-seasoned tongue-and-groove boards and not over 6 in. nominal width. Boards shall be a 1 in. nominal minimum thickness. Boards shall be properly spaced and nailed.

2. VENTILATION

Inadequate ventilation of attic spaces can cause accumulation of moisture in winter months and a build up of heat in the summer. These conditions can lead to:

1. Vapor Condensation
2. Buckling of shingles due to deck movement.
3. Rotting of wood members.
4. Premature failure of roof.

To insure adequate ventilation and circulation of air, place louvers of sufficient size high in the gable ends and/or install continuous ridge and soffit vents.
FHA minimum property standards require one square foot of net free ventilation area to each 150 square feet of space to be vented, or one square foot per 300 square feet if a vapor barrier is installed on the warm side of the ceiling or if at least one half of the ventilation is provided near the ridge. If the ventilation openings are screened, the total area should be doubled.

IT IS PARTICULARLY IMPORTANT TO PROVIDE ADEQUATE VENTILATION.

3. FASTENING

NAILS: TAMKO recommends the use of nails as the preferred method of application.
WIND CAUTION: Extreme wind velocities can damage these shingles after application when proper sealing of the shingles does not occur. This can especially be a problem if the shingles are applied in cooler months or in areas on the roof that do not receive direct sunlight. These conditions may impede the sealing of the adhesive strips on the shingles. The inability to seal down may be compounded by prolonged cold weather conditions and/or blowing dust. In these situations, hand sealing of the shingles is recommended. Shingles must also be fastened according to the fastening instructions described below.

Correct placement of the fasteners is critical to the performance of the shingle. If the fasteners are not placed as shown in the diagrams and described below, TAMKO will not be responsible for any shingles blown off or displaced. TAMKO will not be responsible for damage to shingles caused by winds or gusts exceeding gale force. Gale force shall be the standard as defined by the U.S. Weather Bureau.

FASTENING PATTERNS: Fasteners must be placed above or below the factory applied sealant in an area between 5-1/2" and 6-3/4" from the butt edge of the shingle. Fasteners should be located horizontally according to the diagram below. Do not nail into the sealant. TAMKO recommends nailing below the sealant whenever possible for greater wind resistance.

1) Standard Fastening Pattern. (For use on decks with slopes 2 in. per foot to 21 in. per foot.) One fastener 1 in. back from each end and one 12 in. back from each end of the shingle for a total of 4 fasteners. (See standard fastening pattern illustrated below).

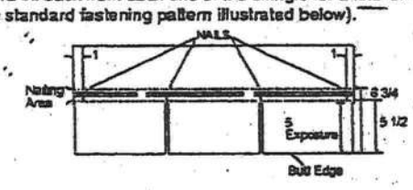

2) Mansard or High Wind Fastening Pattern. (For use on decks with slopes greater than 21 in. per foot.) One fastener 1 in. back from each end and one fastener 10-1/2 in. back from each end and one fastener 13-1/2 in. back from each end for a total of 6 fastener per shingle. (See Mansard fastening pattern illustrated below.)

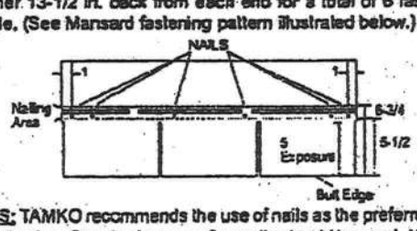

NAILS: TAMKO recommends the use of nails as the preferred method of application. Standard type roofing nails should be used. Nail shanks should be made of minimum 12-gauge wire, and a minimum head diameter of 3/8 in. Nails should be long enough to penetrate 3/4 in.

(Continued)

(CONTINUED from Pg. 2)

with quick setting asphalt adhesive cement immediately upon installation. Spots of cement must be equivalent in size to a 3.25 piece and applied to shingles with a 5 in. exposure, use 6 fasteners per shingle. See Section 3 for the Mansard Fastening Pattern.

3. RE-ROOFING

Before re-roofing, be certain to inspect the roof decks. All plywood shall meet the requirements listed in Section 1.

Nail down or remove curled or broken shingles from the existing roof. Replace all missing shingles with new ones to provide a smooth base. Shingles that are buckled usually indicate warped decking or protruding nails. Hammer down all protruding nails or remove them and refasten in a new location. Remove all drip edge metal and replace with new.

If re-roofing over an existing roof where new flashing is required to protect against ice dams (freeze/thaw cycle of water and/or the backup of water in frozen or clogged gutters), remove the old roofing to a point at least 24 in. beyond the interior wall line and apply TAMKO's Moisture Guard Plus® waterproofing underlayment. Contact TAMKO's Technical Services Department for more information.

The nesting procedure described below is the preferred method for re-roofing over square tab strip shingles with a 5 in. exposure.

Starter Course: Begin by using TAMKO Shingle Starter or by cutting shingles into 5 x 36 inch strips. This is done by removing the 5 in. tabs from the bottom and approximately 2 in. from the top of the shingles so that the remaining portion is the same width as the exposure of the old shingles. Apply the starter piece so that the self-sealing adhesive lies along the eaves and is even with the existing roof. The starter strip should be wide enough to overhang the eaves and carry water into the gutter. Remove 3 in. from the length of the first starter shingle to ensure that the joints from the old roof do not align with the new.

First Course: Cut off approximately 2 in. from the bottom edge of the shingles so that the shingles fit beneath the existing third course and align with the edge of the starter strip. Start the first course with a full 36 in. long shingle and fasten according to the instructions printed in Section 3.

Second and Succeeding Courses: According to the off-set application method you choose to use, remove the appropriate length from the rake end of the first shingle in each succeeding course. Place the top edge of the new shingle against the butt edge of the old shingles in the courses above. The full width shingle used on the second course will reduce the exposure of the first course to 3 in. The remaining courses will automatically have a 5 in. exposure.

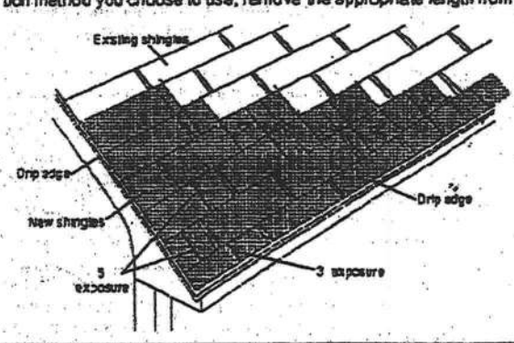

3. VALLEY APPLICATION

Over the shingle underlayment, center a 36 in. wide sheet of TAMKO Nail-Fast® or a minimum 50 lb. roll roofing in the valley. Nail the felt only where necessary to hold it in place and then only nail the outside edges.

IMPORTANT: PRIOR TO INSTALLATION WARM SHINGLES TO PREVENT DAMAGE WHICH CAN OCCUR WHILE BENDING SHINGLES TO FORM VALLEY.

- Apply the first course of shingles along the eaves of one of the intersecting roof planes and across the valley.

Note: For proper flow of water over the trimmed shingle, always start applying the shingles on the roof plane that has the lower slope or less height.

- Extend the end shingle at least 12 in. onto the adjoining roof. Apply succeeding courses in the same manner, extending them across the valley and onto the adjoining roof.
- Do not trim if the shingle length exceeds 12 in. Lengths should vary.
- Press the shingles tightly into the valley.
- Use normal shingle fastening methods.

Note: No fastener should be within 6 in. of the valley centerline, and two fasteners should be placed at the end of each shingle crossing the valley.

- To the adjoining roof plane, apply one row of shingles extending it over previously applied shingles and trim a minimum of 2 in. back from the centerline of the valley.

Note: For a neater installation, snap a chalkline over the shingles for guidance.

- Clip the upper corner of each shingle at a 45-degree angle and embed the end of the shingle in a 3 in. wide strip of asphalt plastic cement. This will prevent water from penetrating between the courses by directing it into the valley.

- ***CAUTION:*** *Adhesive must be applied in smooth, thin, even layers.*

Excessive use of adhesive will cause blistering to this product.

TAMKO assumes no responsibility for blistering.

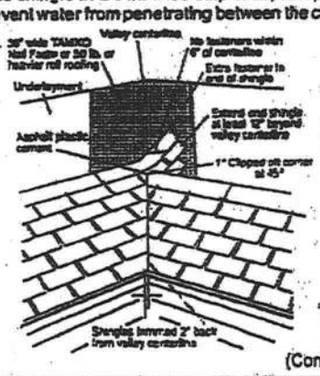

(Continued)

(CONTINUED from Pg. 3)

TAMKO ROOFING PRODUCTS

• Glass-Seal • Elite Glass-Seal®
• Glass-Seal AR • Elite Glass-Seal® AR

THREE-TAB ASPHALT SHINGLES

FOR ALTERNATE VALLEY APPLICATION METHODS, PLEASE CONTACT TAMKO'S TECHNICAL SERVICES DEPARTMENT.

10. HIP AND RIDGE FASTENING DETAIL

Apply the shingles with a 5 in. exposure beginning at the bottom of the hip or from the end of the ridge opposite the direction of the prevailing winds. Secure each shingle with one fastener 5-1/2 in. back from the exposed end and 1 in. up from the edge. Do not nail directly into the sealant.

TAMKO recommends the use of TAMKO Hip & Ridge shingle products. Where matching colors are available, it is acceptable to use TAMKO's Glass-Seal or Elite Glass-Seal shingles cut down to 12 in. pieces.

NOTE: AR type shingle products should be used as Hip & Ridge on Glass-Seal AR and Elite Glass-Seal AR shingles.

Fasteners should be 1/4 in. longer than the one used for shingles.

IMPORTANT: PRIOR TO INSTALLATION, CARE NEEDS TO BE TAKEN TO PREVENT DAMAGE WHICH CAN OCCUR WHILE BENDING SHINGLES IN COOL WEATHER.

THESE ARE THE MANUFACTURER'S APPLICATION INSTRUCTIONS FOR THE ROOFING CONDITIONS DESCRIBED. TAMKO ROOFING PRODUCTS, INC. ASSUMES NO RESPONSIBILITY FOR LEAKS OR OTHER ROOFING DEFECTS RESULTING FROM FAILURE TO FOLLOW THE MANUFACTURER'S INSTRUCTIONS.

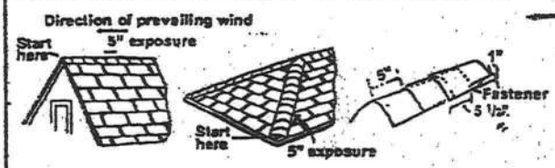

THIS PRODUCT IS COVERED BY A LIMITED WARRANTY. THE TERMS OF WHICH ARE PRINTED ON THE WRAPPER.

IMPORTANT - READ CAREFULLY BEFORE OPENING BUNDLE

In this paragraph "You" and "Your" refer to the installer of the shingles and the owner of the building on which these shingles will be installed. This is a legally binding agreement between You and TAMKO Roofing Products, Inc. ("TAMKO"). By opening this bundle You agree: (a) to install the shingles strictly in accordance with the instructions printed on this wrapper; or (b) that shingles which are not installed strictly in accordance with the instructions printed on this wrapper are sold "AS IS" and are not covered by the limited warranty that is also printed on this wrapper, or any other warranty, including, but not limited to (except where prohibited by law) implied warranties of MERCHANTABILITY and FITNESS FOR USE.

Visit Our Web Site at
www.tamko.com

Central District	220 West 4th St., Joplin, MO 64801	800-641-4691
Northeast District	4500 Tamko Dr., Frederick, MD 21701	800-368-2055
Southeast District	2300 35th St., Tuscaloosa, AL 35401	800-228-2656
Southwest District	7910 S. Central Exp., Dallas, TX 75216	800-443-1834
Western District	5300 East 43rd Ave., Denver, CO 80216	800-530-8868

07/01

VENT-FREE

This unit is A.G.A. certified as a heater with 99% heat efficiency
No chimney or flue system required
Wide selection of factory installed options offered

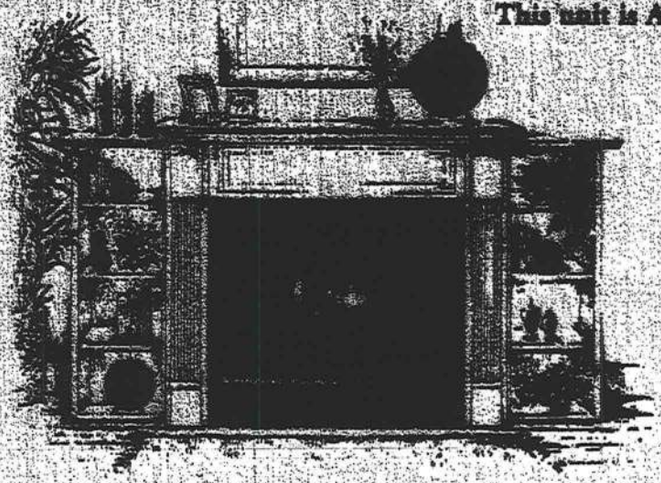

VF-4000

- 14,000 – 25,000 Btu/hr with manual control valve
- 19,500 – 25,000 Btu/hr with millivolt control valve
- Fully assembled and ready to install
- Attractive wood surrounds available
- 15" x 30" fixed or operable screen opening

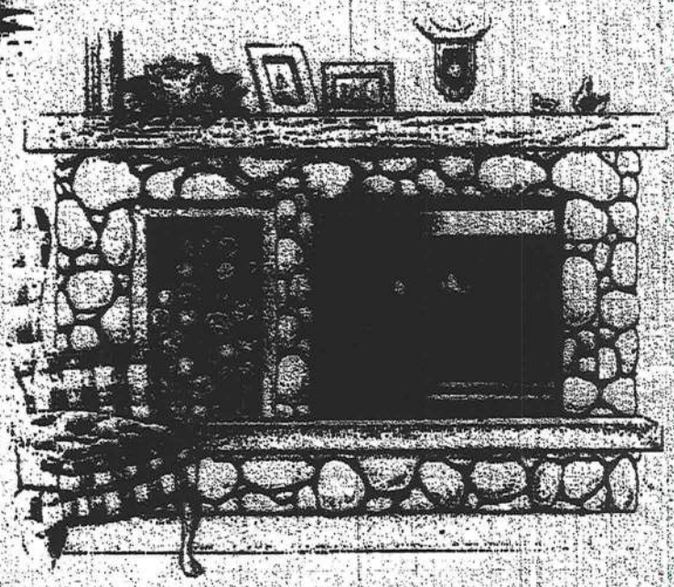

VF-5000

- 25,000 Btu/hr millivolt variable heat output
- 15" X 30" glass or screen viewing area
- Clean burning, safe and easy to install
- Realistic charred oak logs with glowing embers

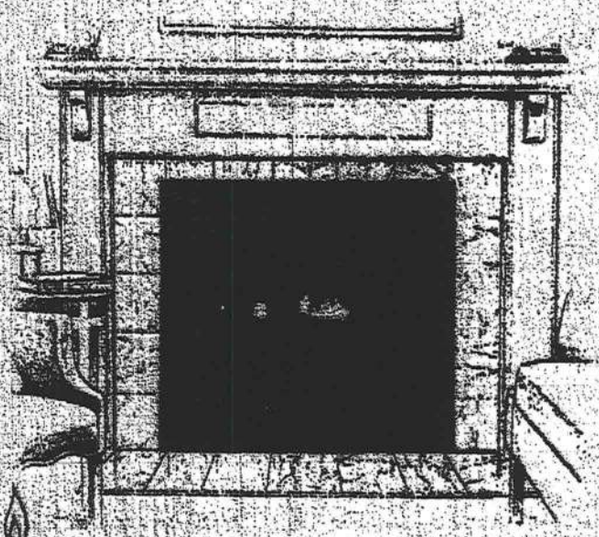

VF-6000

- 32,000 Btu/hr millivolt variable heat output
- Beautiful 20" X 34" glass or screen viewing area
- Will operate during a power failure
- Designed for large rooms

GAS

SUPERIOR

FROM :LAKE CITY INDUSTRIES FAX NO. :+386 758 4735 May. 01 2003 02:50AM P1

[redacted]

VF-6000 shown.

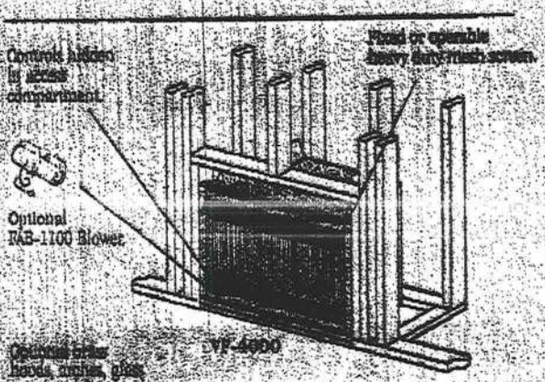

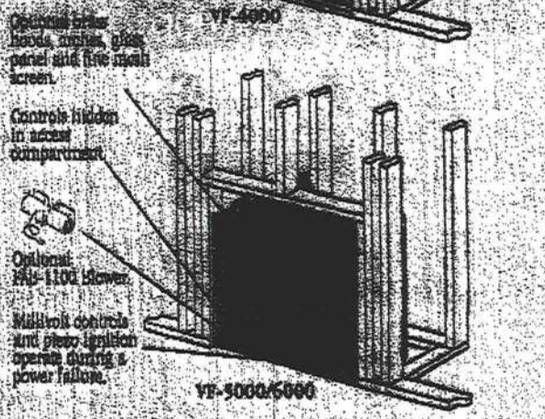

SURROUNDS

The Charleston Poplar Surround is hand crafted using a combination of solid Poplar and Poplar veneer. Using the unique wood type of Poplar allows you the option to paint or stain this elegantly detailed surround. The surround is constructed using easy to assemble cam locks, and available in corner and wall units.

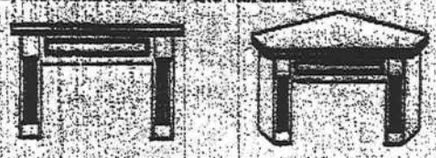

Distributed by:

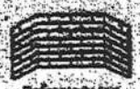

Refractory tan brick panels

Gas flex lines kit.

Square brass trim kit.

Brass Louver kit (For VF-4 only)

Screen panel kit. (For VF-5 & VF6 only)

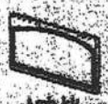

Arch kit. (For VF-5 & VF6 only)

Glass door kit. (For VF-5 & VF6 only)

Brass hood. (For VF-5 & VF6 only)

Wall switch or optional wireless remote available. (For VF-4MV, VF-5 & VF-6)

Wall thermostat (For VF-4MV, VF-5 & VF-6)

Front View

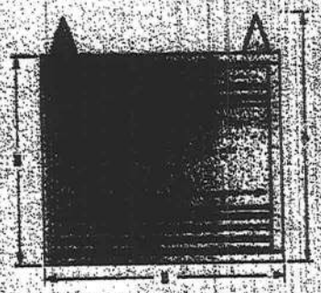

Left Side View

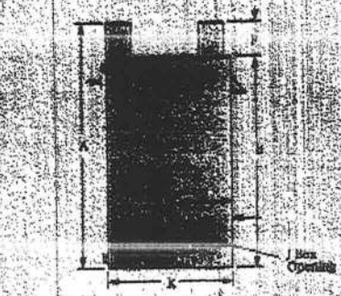

Top View

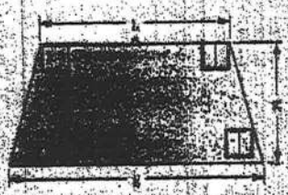

Vent-Free Product Dimensions

	VF-4000/5000C	VF-6000C
[redacted]		42-1/8"
[redacted]	35-1/2"	36-5/8"
[redacted]		20"
[redacted]	30"	34"
[redacted]		40"
[redacted]	5-1/2"	5-1/2"
[redacted]		3-1/8"
[redacted]	3-1/4"	3-3/4"
[redacted]		8-3/8"
[redacted]	5"	5"
[redacted]		19-1/8"
[redacted]	27"	28-1/2"

Btu Chart

Model	Natural	Propane
VF-4000 manual	14,000 – 25,000	14,000 – 25,000
VF-4000/5000 millivolt	19,500 – 25,000	19,500 – 25,000
VF-6000	25,000 – 32,000	25,000 – 32,000

Framing Dimension

Model	Width	Height	Depth
VF-4000/5000	37"	37-1/4"	15-1/2"
VF-6000	41"	42-1/8"	19-1/2"

NOTE: Diagrams and illustrations are not to scale. Product designs, materials, dimensions, specifications, colors and prices subject to change or discontinuation without notice. Built to ANSI Z21.11.2 standard and approved by A.G.A. (report # 12870017).

Consult your distributor for local fireplace code information.

SUPERIOR

www.LennoxHearthProducts.com

Printed in U.S.A. ©2001 Lennox Hearth Products • 1110 West Taft Ave., Orange, CA 92865-4150

Lennox Hearth Products Direct Vent feature sized gas appliances include a 20-year limited warranty.

P/N 60444 REV B 3/01

FROM : LAKE CITY INDUSTRIES FAX NO. :+386 758 4735 May. 01 2003 07:51AM P2

XX
Glazed Outswing Unit

[redacted]

WOOD-EDGE STEEL DOORS

APPROVED ARRANGEMENT:

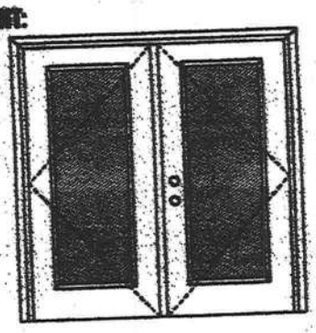

Note:
Units of other sizes are covered by this report as long as the panels used do not exceed 3'0" x 6'6".

Double Door
Maximum unit size = 6'0" x 6'6"

Design Pressure
+40.5/-40.5
Limited water valves special threshold design is used.

Large Missile Impact Resistance
Hurricane protective system (shutters) is REQUIRED.

Actual design pressure and impact resistant requirements for a specific building design and geographic location is determined by ASCE 7-national, state or local building codes specify the edition required.

MINIMUM ASSEMBLY DETAIL:

Compliance requires that minimum assembly details have been followed – see MAD-WL-MA0012-02 and MAD-WL-MA0041-02.

MINIMUM INSTALLATION DETAIL:

Compliance requires that minimum installation details have been followed – see MID-WL-MA0002-02.

APPROVED DOOR STYLES:

1/4 GLASS:

1/2 GLASS:

*This glass kit may also be used in the following door styles: 5-panel; 5-panel with scroll; Eyebrow 5-panel; Eyebrow 5-panel with scroll.

Johnson Entrysystems

March 29, 2002
Our continuing program of product improvement makes specifications, design and product detail subject to change without notice.

FRENDOR Premium Quality Doors

Exclusively from Masonite
Masonite International Corporation

XX
Glazed Outswing Unit

[redacted]

WOOD-EDGE STEEL DOORS

APPROVED DOOR STYLES:

3/4 GLASS:

FULL GLASS:

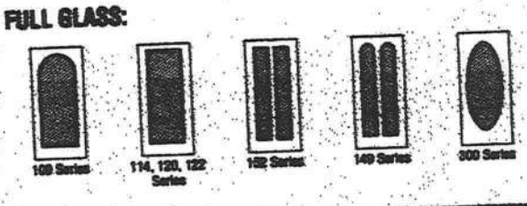

CERTIFIED TEST REPORTS:

NCTL 210-1897-7, 8, 9, 10, 11, 12; NCTL 210-1884-5, 6, 7, 8; NCTL 210-2178-1, 2, 3

Certifying Engineer and License Number: Barry D. Portney, P.E. / 16258.

Unit Tested in Accordance with Miami-Dade BCCO PA202.

Evaluation report NCTL-210-2794-1

Door panels constructed from 26-gauge 0.017" thick steel skins. Both stiles constructed from wood. Top and rails constructed of 0.041" steel. Bottom and rails constructed of 0.021" steel. Interior cavity of slab filled with rigid polyurethane foam core. Slab glazed with insulated glass mounted in a rigid plastic lip lite surround.

Frame constructed of wood with an extruded aluminum bumper threshold.

PRODUCT COMPLIANCE LABELING:

TESTED IN
ACCORDANCE WITH
MIAMI-DADE BCCO PA202

COMPANY NAME
CITY, STATE

To the best of my knowledge and ability the above side-hinged exterior door unit conforms to the requirements of the 2001 Florida Building Code, Chapter 17 (Structural Tests and Inspections).

Kurt L Balthazor

State of Florida, Professional Engineer
Kurt Balthazor, P.E. – License Number 56533

Johnson Entry Systems

March 29, 2002
Our continuing program of product improvement makes specifications, design and product detail subject to change without notice.

FRENDOR Collection Premium Quality Doors

Exclusively from Masonite®
Masonite International Corporation

GLASS INSERT IN DOOR OR SIDELITE PANEL

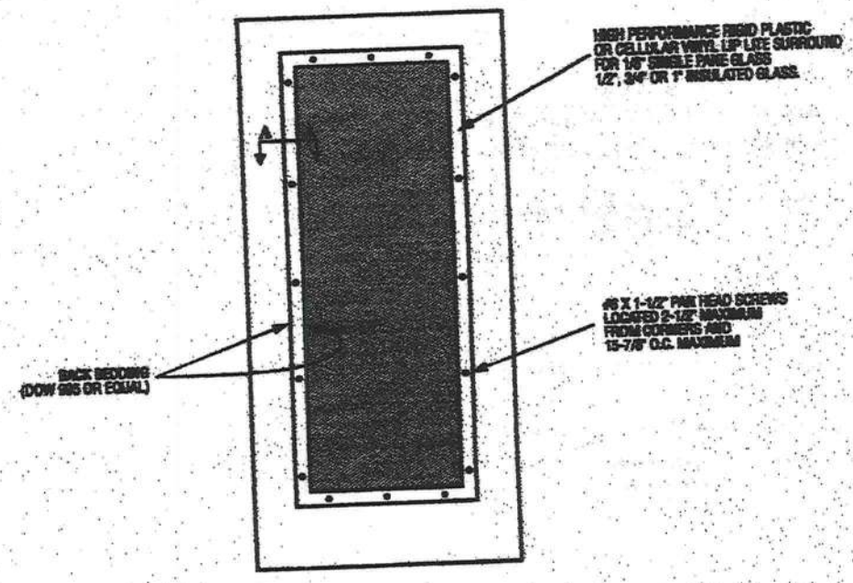

SECTION A-A
TYPICAL RIGID PLASTIC LIP LITE SURROUND

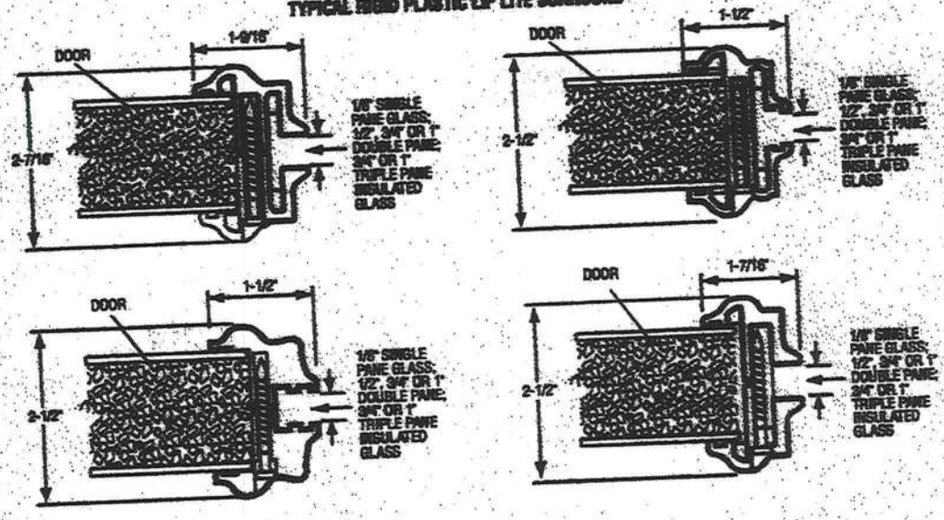

March 29, 2002
Our continuing program of product improvement makes specifications, design and product detail subject to change without notice.

XX
Unit

OUTSWING UNITS WITH DOUBLE DOOR

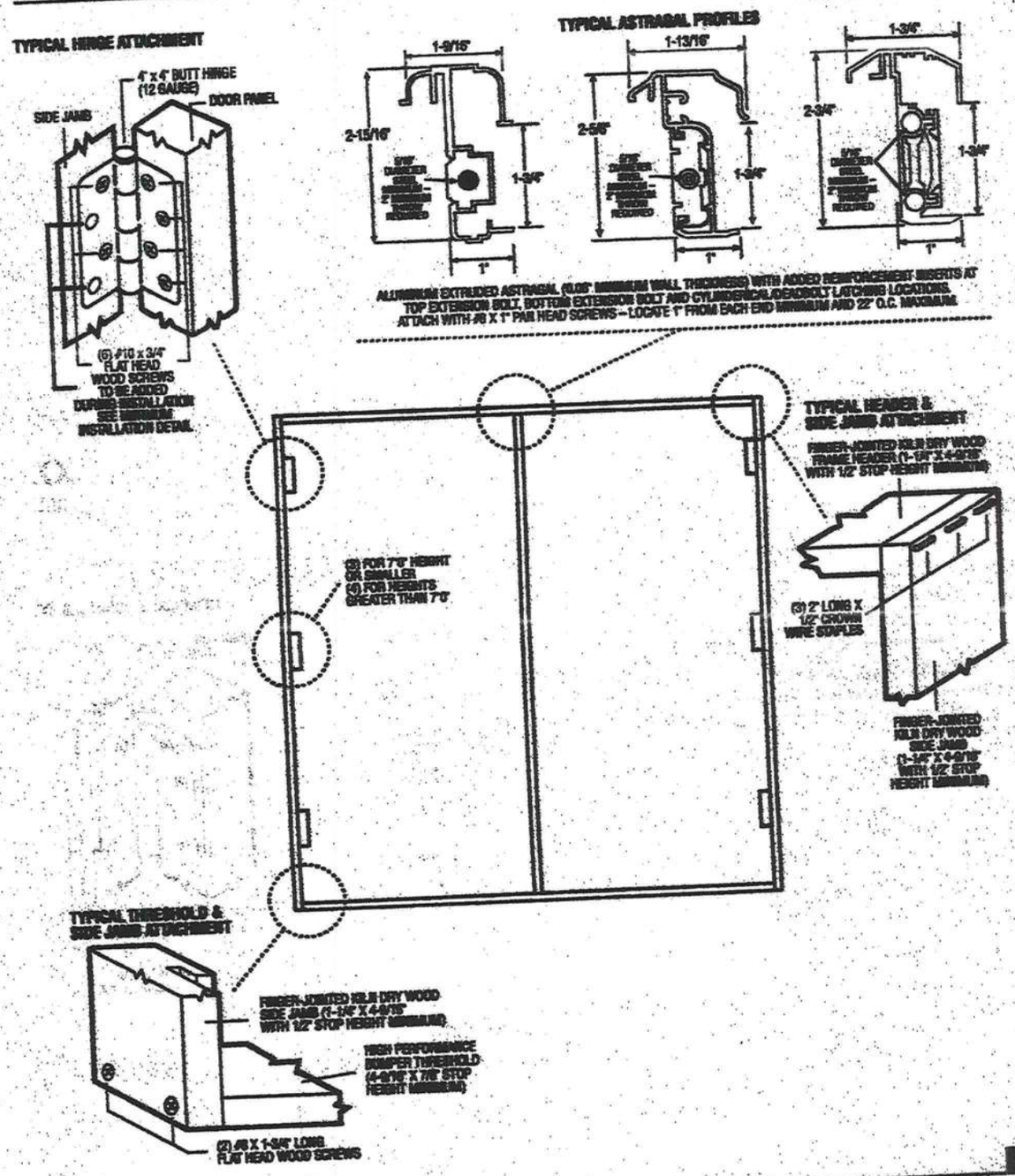

FIBERDOOR Premium Quality Doors

Exclusively from Masonite®
Masonite International Corporation

March 29, 2002
Our continuing program of product improvement makes specifications, design and product data subject to change without notice.

XX
Unit

[redacted]

DOUBLE DOOR

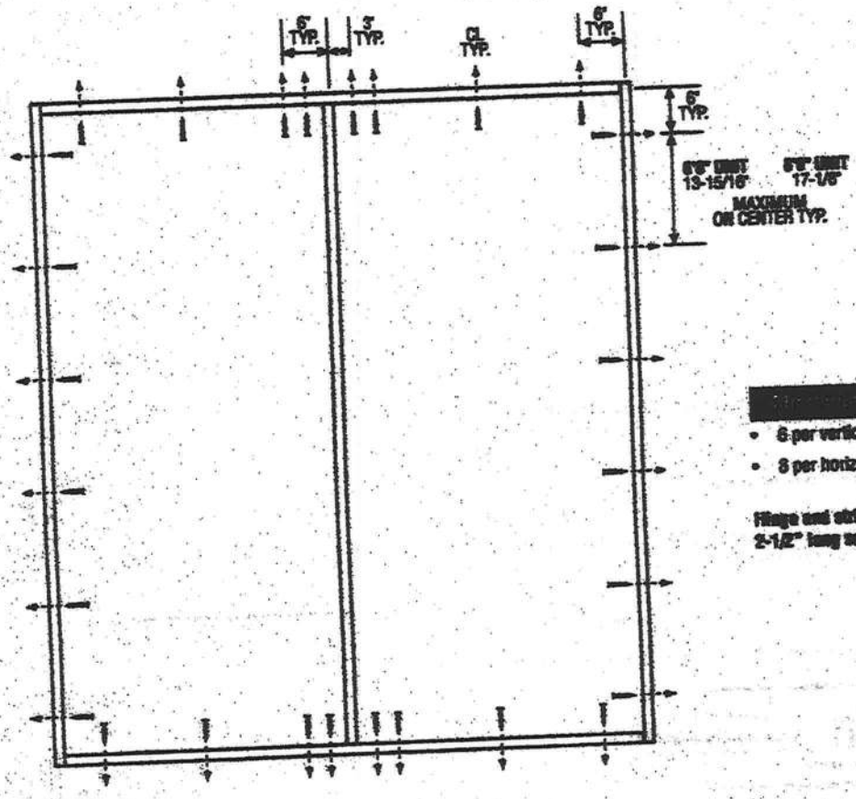

[redacted]

- 6 per vertical framing member
- 3 per horizontal framing member

Hinge and strike plates require two 2-1/2" long screws per location.

Latching Hardware:

- Compliance requires that GRADE 2 or better (ANSI/BHMA A156.2) cylinderical and deadlock hardware be installed.

Notes:

1. Anchor calculations have been carried out with the lowest (least) fastener rating from the different fasteners being considered for use. Fasteners analyzed for this unit include #8 and #10 wood screws or 3/16" Tapcons.
2. The wood screw single shear design values come from Table 11.3A of ANSI/AF & PA NDS for southern pine lumber with a side member thickness of 1-1/4" and achievement of minimum embedment. The 3/16" Tapcon single shear design values come from the ITW and ELCO Dade Country approvals respectively, each with minimum 1-1/4" embedment.
3. Wood bucks by others, must be anchored property to transfer loads to the structure.

[redacted]

FRENDOR Premium Quality Doors

Exclusively from Masonite®
Masonite International Corporation

March 29, 2002
Our continuing program of product improvement makes specifications, design and product detail subject to change without notice.

I

AAMA/NWWDA 101/I.S.2-97
TEST REPORT SUMMARY

Rendered to:

MI HOME PRODUCTS, INC.

SERIES/MODEL: 650 Fin
TYPE: Aluminum Single Hung Window

Title of Test	Results
Rating	H-R40 52 x 72
Overall Design Pressure	+45.0 psf -47.2 psf
Operating Force	11 lb max.
Air Infiltration	0.13 cfm/ft²
Water Resistance	6.00 psf
Structural Test Pressure	+67.5 psf -70.8 psf
Deglazing	Passed
Forced Entry Resistance	Grade 10

Reference should be made to Report No. 01-41134.01 dated 03/26/02 for complete test specimen description and data.

For ARCHITECTURAL TESTING, INC.

Mark A. Hess, Technician

MAH:nlb

ALLEN R. REEVES
CERTIFICATE NO. 18354
STATE OF FLORIDA
PROFESSIONAL ENGINEER

Allen R. Reeves
1 APRIL 2002

II

Architectural Testing

AAMA/NWWDA 101/I.S.2-97 TEST REPORT

Rendered to

MI HOME PRODUCTS, INC.
650 West Market Street
P.O. Box 370
Gratz, Pennsylvania 17030-0370

Report No: 01-41134.01
Test Date: 03/07/02
Report Date: 03/26/02
Expiration Date: 03/07/06

Project Summary: Architectural Testing, Inc. (ATI) was contracted by MI Home Products, Inc. to perform tests on Series/Model 650 Fin, aluminum single hung window at their facility located in Elizabethville, Pennsylvania. The samples tested successfully met the performance requirements for a H-R40 52 x 72 rating.

Test Specification: The test specimen was evaluated in accordance with AAMA/NWWDA 101/I.S.2-97, *Voluntary Specifications for Aluminum, Vinyl (PVC) and Wood Windows and Glass Doors.*

Test Specimen Description:

Series/Model: 650 Fin

Type: Aluminum Single Hung Window

Overall Size: 4' 4-1/4" wide by 6' 0-3/8" high

Active Sash Size: 4' 1-3/4" wide by 3' 0-5/8" high

Daylight Opening Size: 3' 11-3/8" wide by 2' 9-1/2" high

Screen Size: 4' 0-1/4" wide by 2' 11-1/8" high

Finish: All aluminum was white.

Glazing Details: The active and fixed lites utilized 5/8" thick, sealed insulating glass constructed from two sheets of 1/8" thick, clear annealed glass and a metal reinforced vinyl spacer system. The active sash was channel glazed utilizing a flexible vinyl wrap-around gasket. The fixed lite was interior glazed against double-sided adhesive foam tape and secured with PVC snap-in glazing beads.

130 Derry Court
York, PA 17402-9405
phone: 717.764.7700
fax: 717.764.4129
www.archtest.com

Allen M. Reeves
1 APRIL 2002

REEVES
No. 18384
STATE OF FLORIDA
PROFESSIONAL ENGINEER

III

Test Specimen Description: (Continued)

Weatherstripping:

Description	Quantity	Location
0.230" high by 0.270" backed polypile with center fin	1 Row	Fixed meeting rail
0.250" high by 0.187" backed polypile with center fin	2 Rows	Active sash stiles
1/2" x 1/2" dust plug	4 Pieces	Active sash, top and bottom of stiles
1/4" foam-filled vinyl bulb seal	1 Row	Active sash, bottom rail

Frame Construction: The frame was constructed of extruded aluminum with coped, butted, and sealed corners fastened with two #8 x 1" screws through the head and sill into each jamb screw boss. End caps were utilized on the ends of the fixed meeting rail and secured with two 1-1/4" screws per cap. Meeting rail was secured to the frame utilizing two 1-1/4" screws.

Sash Construction: The sash was constructed of extruded aluminum with coped, butted, and sealed corners fastened with two #8 x 1-1/2" screws through the rails into each jamb screw boss.

Screen Construction: The screen was constructed from roll-formed aluminum with keyed corners. The fiberglass mesh was secured with a flexible spline.

Hardware:

Description	Quantity	Location
Metal cam lock with keeper		Midspan, active meeting rail with keeper adjacent on fixed meeting rail
Plastic tilt latch	2	Active sash, meeting rail ends
Metal tilt pin	2	Active sash, bottom rail ends
Balance assembly	2	One in each jamb
Screen plunger	2	4" from rail ends on top rail

Allen N. Reeves
1 APRIL 2002

ALLEN N. REEVES
CERTIFICATE
NO. 18354
STATE OF
FLORIDA
PROFESSIONAL ENGINEER

IV

Test Specimen Description: (Continued)

Drainage: Sloped sill

Reinforcement: No reinforcement was utilized.

Installation: The test specimen was installed into a 2 x 8 #2 Spruce-Pine-Fir wood test buck with #8 x 1-5/8" drywall screws every 8" on center around the nail fin. Polyurethane was used as a sealant under the nail fin and around the exterior perimeter.

Test Results:

The results are tabulated as follows:

Paragraph	Title of Test - Test Method	Results	Allowed
2.2.1.6.1	Operating Force	11 lbs	30 lbs max
	Air Infiltration (ASTM E 283-91) @ 1.57 psf (25 mph)	0.13 cfm/ft^2	0.3 cfm/ft^2 max

Note #1: The tested specimen meets the performance levels specified in AAMA/NWWDA 101/I.S. 2-97 for air infiltration.

	Water Resistance (ASTM E 547-00) (with and without screen) WTP = 2.86 psf	No leakage	No leakage
2.1.4.1	Uniform Load Deflection (ASTM E 330-97) (Measurements reported were taken on the meeting rail) (Loads were held for 33 seconds)		
	@ 25.9 psf (positive)	0.42"*	0.26" max.
	@ 34.7 psf (negative)	0.43"*	0.26" max.

**Exceeds L/175 for deflection, but passes all other test requirements.*

2.1.4.2	Uniform Load Structural (ASTM E 330-97) (Measurements reported were taken on the meeting rail) (Loads were held for 10 seconds)		
	@ 38.9 psf (positive)	0.02"	0.18" max.
	@ 52.1 psf (negative)	0.02"	0.18" max.

Allen H. Reeves
1 APRIL 2002

ALLEN H. REEVES
CERTIFICATE
NO. 12377
STATE OF
FLORIDA
PROFESSIONAL ENGINEER

Test Specimen Description: (Continued)

Paragraph	Title of Test - Test Method	Results	Allowed
2.2.1.6.2	Deglazing Test (ASTM E 987)		
	In operating direction at 70 lbs		
	Meeting rail	0.12"/25%	0.50"/100%
	Bottom rail	0.12"/25%	0.50"/100%
	In remaining direction at 50 lbs		
	Left stile	0.06"/12%	0.50"/100%
	Right stile	0.06"/12%	0.50"/100%
	Forced Entry Resistance (ASTM F 588-97)		
	Type: A		
	Grade: 10		
	Lock Manipulation Test	No entry	No entry
	Tests A1 through A5	No entry	No entry
	Test A7	No entry	No entry
	Lock Manipulation Test	No entry	No entry
Optional Performance			
4.3	Water Resistance (ASTM E 547-00) (with and without screen) WTP = 6.00 psf	No leakage	No leakage
	Uniform Load Deflection (ASTM E 330-97) (Measurements reported were taken on the meeting rail) (Loads were held for 33 seconds)		
	@ 45.0 psf (positive)	0.47"*	0.26" max.
	@ 47.2 psf (negative)	0.46"*	0.26" max.

**Exceeds L/175 for deflection, but passes all other test requirements.*

	Uniform Load Structural (ASTM E 330-97) (Measurements reported were taken on the meeting rail) (Loads were held for 10 seconds)		
	@ 67.5 psf (positive)	0.05"	0.18" max.
	@ 70.8 psf (negative)	0.05"	0.18" max.

Allen N. Reeves
1 APRIL 2002

ALLEN N. REEVES
CERTIFICATE No. 18384
STATE OF FLORIDA
PROFESSIONAL ENGINEER

VI

Detailed drawings, representative samples of the test specimen, and a copy of this report will be retained by ATI for a period of four years. The above results were secured by using the designated test methods and they indicate compliance with the performance requirements of the above referenced specification. This report does not constitute certification of this product, which may only be granted by the certification program administrator.

For ARCHITECTURAL TESTING, INC:

Mark A. Hess
Technician

Allen N. Reeves, P.E.
Director - Engineering Services
1 APRIL 2002

MAH:nlb
01-41134.01

ALLEN N. REEVES
CERTIFICATE
NO. 19[illegible]
STATE OF
FLORIDA
PROFESSIONAL ENGINEER

Residential System Sizing Calculation

Summary

Spec House

Lake City, FL

Project Title:
509016SparksConstructionSpecHouse

Class 3 Rating
Registration No. 0
Climate: North

10/4/2005

Location for weather data: Gainesville - Defaults: Latitude(29) Temp Range(M)					
Humidity data: Interior RH (50%) Outdoor wet bulb (77F) Humidity difference(51gr.)					
Winter design temperature	31	F	Summer design temperature	93	F
Winter setpoint	70	F	Summer setpoint	75	F
Winter temperature difference	39	F	Summer temperature difference	18	F
Total heating load calculation	**30965**	**Btuh**	**Total cooling load calculation**	**31694**	**Btuh**
Submitted heating capacity	% of calc	Btuh	Submitted cooling capacity	% of calc	Btuh
Total (Electric Heat Pump)	119.5	37000	Sensible (SHR = 0.5)	76.6	18500
Heat Pump + Auxiliary(0.0kW)	119.5	37000	Latent	245.4	18500
			Total (Electric Heat Pump)	116.7	37000

WINTER CALCULATIONS

Winter Heating Load (for 1688 sqft)

Load component			Load	
Window total	273	sqft	7726	Btuh
Wall total	1323	sqft	3867	Btuh
Door total	60	sqft	921	Btuh
Ceiling total	1815	sqft	2360	Btuh
Floor total	187	ft	5909	Btuh
Infiltration	203	cfm	8707	Btuh
Subtotal			**29490**	**Btuh**
Duct loss			1475	Btuh
TOTAL HEAT LOSS			**30965**	**Btuh**

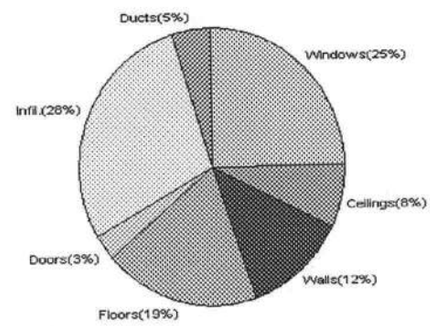

SUMMER CALCULATIONS

Summer Cooling Load (for 1688 sqft)

Load component			Load	
Window total	273	sqft	10064	Btuh
Wall total	1323	sqft	2193	Btuh
Door total	60	sqft	608	Btuh
Ceiling total	1815	sqft	2577	Btuh
Floor total			0	Btuh
Infiltration	178	cfm	3516	Btuh
Internal gain			3000	Btuh
Subtotal(sensible)			**21959**	**Btuh**
Duct gain			2196	Btuh
Total sensible gain			**24155**	**Btuh**
Latent gain(infiltration)			6159	Btuh
Latent gain(internal)			1380	Btuh
Total latent gain			**7539**	**Btuh**
TOTAL HEAT GAIN			**31694**	**Btuh**

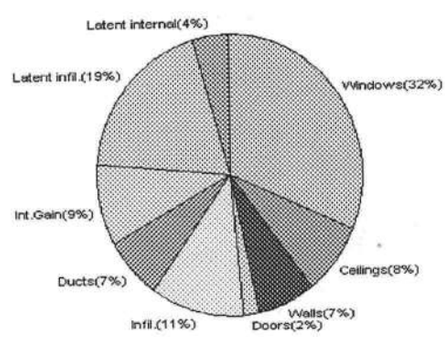

EnergyGauge® System Sizing based on ACCA Manual J.
PREPARED BY: Ben Sparks
DATE: 10-4-05

EnergyGauge® FLR2PB v3.4

System Sizing Calculations - Winter

Residential Load - Component Details

Spec House

Lake City, FL

Project Title:
509016SparksConstructionSpecHouse

Class 3 Rating
Registration No. 0
Climate: North

Reference City: Gainesville (Defaults) Winter Temperature Difference: 39.0 F

10/4/2005

Window	Panes/SHGC/Frame/U	Orientation	Area X	HTM=	Load
1	2, Clear, Metal, DEF	N	30.0	28.3	849 Btuh
2	2, Clear, Metal, DEF	NW	18.0	28.3	509 Btuh
3	2, Clear, Metal, DEF	N	24.0	28.3	679 Btuh
4	2, Clear, Metal, DEF	NE	18.0	28.3	509 Btuh
5	2, Clear, Metal, DEF	N	30.0	28.3	849 Btuh
6	2, Clear, Metal, DEF	N	20.0	28.3	566 Btuh
7	2, Clear, Metal, DEF	N	6.0	28.3	170 Btuh
8	2, Clear, Metal, DEF	E	15.0	28.3	424 Btuh
9	2, Clear, Metal, DEF	E	4.0	28.3	113 Btuh
10	2, Clear, Metal, DEF	S	30.0	28.3	849 Btuh
11	2, Clear, Metal, DEF	S	14.0	28.3	396 Btuh
12	2, Clear, Metal, DEF	S	18.0	28.3	509 Btuh
13	2, Clear, Metal, DEF	W	16.0	28.3	453 Btuh
14	2, Clear, Metal, DEF	W	30.0	28.3	849 Btuh
	Window Total		273		7726 Btuh
Walls	Type	R-Value	Area X	HTM=	Load
1	Frame - Exterior	13.0	1167	3.1	3618 Btuh
2	Frame - Adjacent	13.0	156	1.6	250 Btuh
	Wall Total		1323		3867 Btuh
Doors	Type		Area X	HTM=	Load
1	Insulated - Exter		20	18.3	367 Btuh
2	Insulated - Exter		20	18.3	367 Btuh
3	Insulated - Adjac		20	9.4	188 Btuh
	Door Total		60		921Btuh
Ceilings	Type	R-Value	Area X	HTM=	Load
1	Under Attic	30.0	1815	1.3	2360 Btuh
	Ceiling Total		1815		2360Btuh
Floors	Type	R-Value	Size X	HTM=	Load
1	Slab-On-Grade Edge Insul	0	187.0 ft(p)	31.6	5909 Btuh
	Floor Total		187		5909 Btuh
Infiltration	Type	ACH X	Building Volume	CFM=	Load
	Natural	0.80	15192(sqft)	203	8707 Btuh
	Mechanical			0	0 Btuh
	Infiltration Total			203	8707 Btuh

Totals for Heating	**Subtotal**	**29490 Btuh**
	Duct Loss(using duct multiplier of 0.05)	**1475 Btuh**
	Total Btuh Loss	**30965 Btuh**

EnergyGauge® FLR2PB v3.4

Manual J Winter Calculations

Residential Load - Component Details (continued)

Spec House

Lake City, FL

Project Title:
509016SparksConstructionSpecHouse

Class 3 Rating
Registration No. 0
Climate: North

10/4/2005

Key: Window types (SHGC - Shading coefficient of glass as SHGC numerical value or as clear or tint)
(Frame types - metal, wood or insulated metal)
(U - Window U-Factor or 'DEF' for default)
(HTM - ManualJ Heat Transfer Multiplier)
Key: Floor size (perimeter(p) for slab-on-grade or area for all other floor types)

System Sizing Calculations - Summer

Residential Load - Component Details

Spec House

Lake City, FL

Project Title:
509016SparksConstructionSpecHouse

Class 3 Rating
Registration No. 0
Climate: North

Reference City: Gainesville (Defaults) Summer Temperature Difference: 18.0 F 10/4/2005

Window	Type Panes/SHGC/U/InSh/ExSh	Ornt	Overhang Len	Overhang Hgt	Window Area(sqft) Gross	Shaded	Unshaded	HTM Shaded	HTM Unshaded	Load
1	2, Clear, DEF, N, N	N	1.5	6.5	30.0	0.0	30.0	22	22	660 Btuh
2	2, Clear, DEF, N, N	NW	2	7.5	18.0	0.0	18.0	22	50	900 Btuh
3	2, Clear, DEF, N, N	N	5.5	7.5	24.0	0.0	24.0	22	22	528 Btuh
4	2, Clear, DEF, N, N	NE	15	7.5	18.0	0.0	18.0	22	50	900 Btuh
5	2, Clear, DEF, N, N	N	8.08	6.5	30.0	0.0	30.0	22	22	660 Btuh
6	2, Clear, DEF, N, N	N	8	8	20.0	0.0	20.0	22	22	440 Btuh
7	2, Clear, DEF, N, N	N	8	3	6.0	0.0	6.0	22	22	132 Btuh
8	2, Clear, DEF, N, N	E	1.5	5.5	15.0	0.0	15.0	22	72	1080 Btuh
9	2, Clear, DEF, N, N	E	1.5	1.5	4.0	3.3	0.7	22	72	122 Btuh
10	2, Clear, DEF, N, N	S	0	0	30.0	0.0	30.0	22	37	1110 Btuh
11	2, Clear, DEF, N, N	S	7	9	14.0	14.0	0.0	22	37	308 Btuh
12	2, Clear, DEF, N, N	S	7	3	18.0	18.0	0.0	22	37	396 Btuh
13	2, Clear, DEF, N, N	W	1.5	4.5	16.0	3.0	13.0	22	72	1003 Btuh
14	2, Clear, DEF, N, N	W	1.5	5.5	30.0	6.7	23.3	22	72	1825 Btuh
	Window Total				273					10064 Btuh

Walls	Type	R-Value	Area	HTM	Load
1	Frame - Exterior	13.0	1167.0	1.7	2031 Btuh
2	Frame - Adjacent	13.0	156.0	1.0	162 Btuh
	Wall Total		1323.0		2193 Btuh

Doors	Type	Area	HTM	Load
1	Insulated - Exter	20.0	10.1	203 Btuh
2	Insulated - Exter	20.0	10.1	203 Btuh
3	Insulated - Adjac	20.0	10.1	203 Btuh
	Door Total	60.0		608 Btuh

Ceilings	Type/Color	R-Value	Area	HTM	Load
1	Under Attic/Dark	30.0	1815.0	1.4	2577 Btuh
	Ceiling Total		1815.0		2577 Btuh

Floors	Type	R-Value	Size	HTM	Load
1	Slab-On-Grade Edge Insulation	0.0	187.0 ft(p)	0.0	0 Btuh
	Floor Total		187.0		0 Btuh

Infiltration	Type	ACH	Volume	CFM=	Load
	Natural	0.70	15192	177.6	3516 Btuh
	Mechanical			0	0 Btuh
	Infiltration Total			178	3516 Btuh

Internal gain	Occupants	Btuh/occupant	Appliance	Load
	6	X 300 +	1200	3000 Btuh

Manual J Summer Calculations

Residential Load - Component Details (continued)

Spec House

Lake City, FL

Project Title:
509016SparksConstructionSpecHouse

Class 3 Rating
Registration No. 0
Climate: North

10/4/2005

Totals for Cooling	Subtotal	21959	Btuh
	Duct gain(using duct multiplier of 0.10)	2196	Btuh
	Total sensible gain	24155	Btuh
	Latent infiltration gain (for 51 gr. humidity difference)	6159	Btuh
	Latent occupant gain (6 people @ 230 Btuh per person)	1380	Btuh
	Latent other gain	0	Btuh
	TOTAL GAIN	31694	Btuh

Key: Window types (SHGC - Shading coefficient of glass as SHGC numerical value or as clear or tint)
(U - Window U-Factor or 'DEF' for default)
(InSh - Interior shading device: none(N), Blinds/Daperies(B) or Roller Shades(R))
(ExSh - Exterior shading device: none(N) or numerical value)
(Ornt - compass orientation)

New Construction Subterranean Termite Soil Treatment Re

This form is completed by the licensed Pest Control Company.

Public reporting burden for this collection of information is estimated to average 15 minutes per response, including the time for revie searching existing data sources, gathering and maintaining the data needed, and completing and reviewing the collection of information. This inc mandatory and is required to obtain benefits. HUD may not collect this information, and you are not required to complete this form, unless it displays currently valid OMB control number.
Section 24 CFR 200.926d(b)(3) requires that the sites for HUD insured structures must be free of termite hazards. This information collection requires the builder to certify that an authorized Pest Control company performed all required treatment for termites, and that the builder guarantees the treated area against infestation for one year. Builders, pest control companies, mortgage lenders, homebuyers, and HUD as a record of treatment for specific homes will use the information collected. The information is not considered confidential.

This report is submitted for informational purposes to the builder on proposed (new) construction cases when soil treatment for prevention of subterranean termite infestation is specified by the builder, architect, or required by the lender, architect, FHA, or VA.

All contracts for services are between the Pest Control Operator and builder, unless stated otherwise.

23883

Section 1: General Information (Treating Company Information)

Company Name: Aspen Pest Control, Inc.
Company Address: 301 NW Cole Terrace City Lake City State FL Zip 32055
Company Business License No. JB109476 Company Phone No. 386-755-3611
FHA/VA Case No. (if any)

Section 2: Builder Information

Company Name: Sparks Tank Company Phone No.

Section 3: Property Information

Location of Structure(s) Treated (Street Address or Legal Description, City, State and Zip) 167 SW Edna St Lake City FL

Type of Construction (More than one box may be checked) ☒ Slab ☐ Basement ☐ Crawl ☐ Other
Approximate Depth of Footing: Outside 17 Inside 36 Type of Fill Dirt

Section 4: Treatment Information

Date(s) of Treatment(s) 12-13-05
Brand Name of Product(s) Used Prebuild T.T
EPA Registration No. 100-1006
Approximate Final Mix Solution % 0.25 %
Approximate Size of Treatment Area: Sq. ft. 2444 Linear ft. 240 Linear ft. of Masonry Voids 240
Approximate Total Gallons of Solution Applied 730
Was treatment completed on exterior? ☐ Yes ☒ No
Service Agreement Available? ☒ Yes ☐ No
Note: Some state laws require service agreements to be issued. This form does not preempt state law.

Attachments (List)

Comments

Name of Applicator(s) Steve Brannon Certification No. (if required by State law) JF104376

The applicator has used a product in accordance with the product label and state requirements. All treatment materials and methods used comply with state and federal regulations.

Authorized Signature Date 12-13-05

Warning: HUD will prosecute false claims and statements. Conviction may result in criminal and/or civil penalties. (18 U.S.C. 1001, 1010. 1012; 31 U.S.C. 3729, 3802)

Form **NPCA-99-B** may still be used form **HUD-NPCA-99-B** (04/2003)

Reorder Product #2581 • from CROWNMAX • 1-800-252-4011

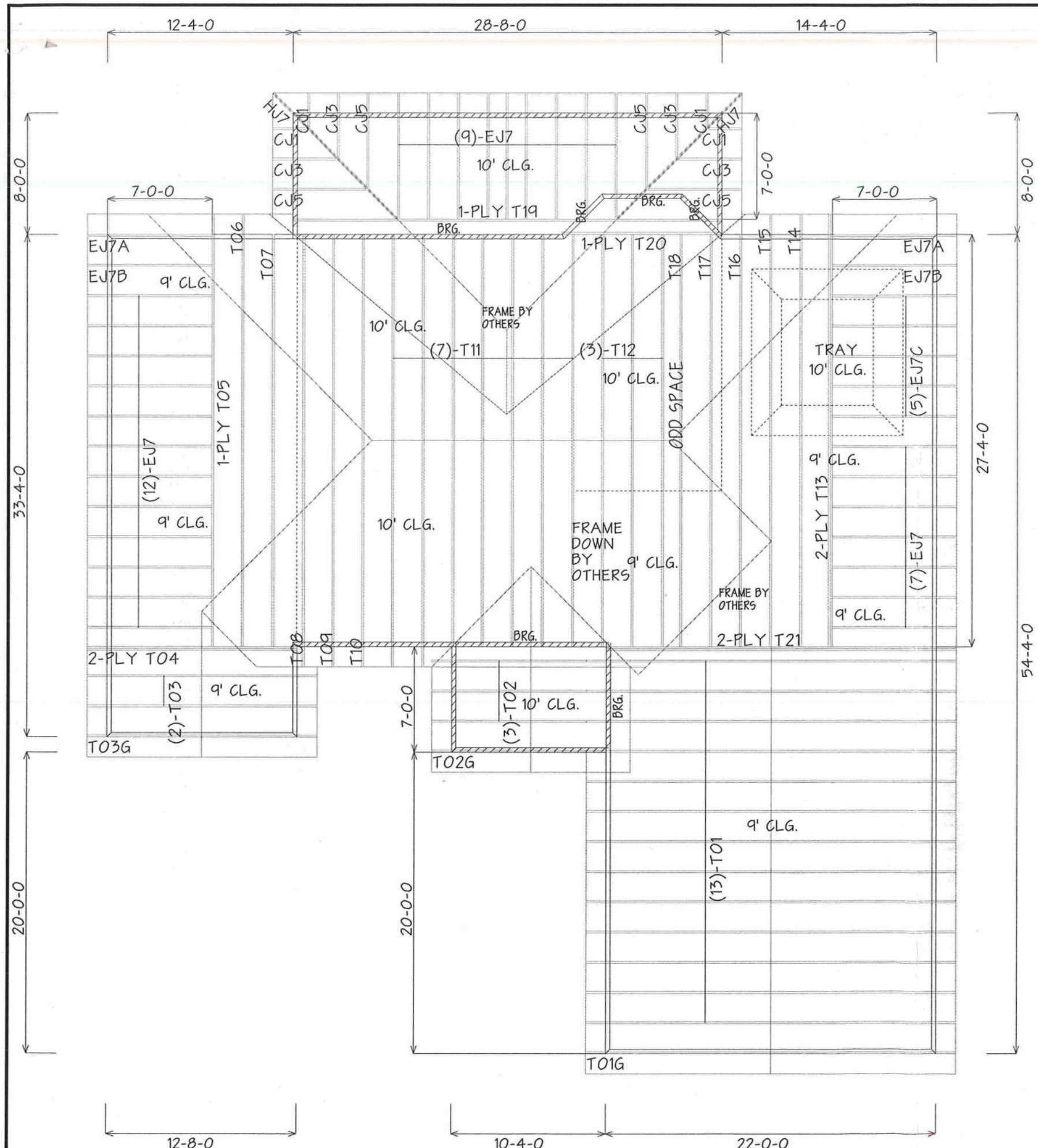

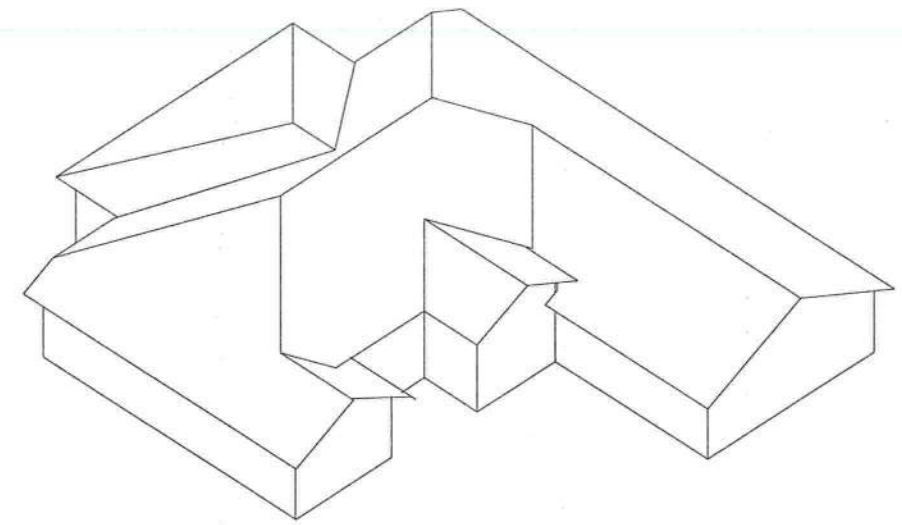

BEARING HEIGHT SCHEDULE

8'-0"

10'-0"

ROOF PITCH 6/12-5/12

HANGER SCHEDULE
(16) HTU26
(1) HHUS26-2

OVERHANG SPEC. BY BUILDER

NOTES:

1.) REFER TO HIB 91 (RECOMMENDATIONS FOR HANDLING INSTALLATION AND TEMPORARY BRACING.) REFER TO ENGINEERED DRAWINGS FOR PERMANENT BRACING REQUIRED.

2.) ALL TRUSSES (INCLUDING TRUSSES UNDER VALLEY FRAMING) MUST BE COMPLETELY DECKED OR REFER TO DETAIL V105 FOR ALTERNATE BRACING REQUIREMENTS.

3.) ALL VALLEYS ARE TO BE CONVENTIONALLY FRAMED BY BUILDER.

4.) ALL TRUSSES ARE DESIGNED FOR 2' o.c. MAXIMUM SPACING, UNLESS OTHERWISE NOTED.

5.) ALL WALLS SHOWN ON PLACEMENT PLAN ARE CONSIDERED TO BE LOAD BEARING, UNLESS OTHERWISE NOTED.

6.) SY42 TRUSSES MUST BE INSTALLED WITH THE TOP BEING UP.

7.) ALL ROOF TRUSS HANGERS TO BE SIMPSON HUS26 UNLESS OTHERWISE NOTED. ALL FLOOR TRUSS HANGERS TO BE SIMPSON THA422 UNLESS OTHERWISE NOTED.

8.) BEAM/HEADER/LINTEL (HDR) TO BE FURNISHED BY BUILDER.

SHOP DRAWING APPROVAL

THIS LAYOUT IS THE SOLE SOURCE FOR FABRICATION OF TRUSSES AND VOIDS ALL PREVIOUS ARCHITECTURAL OR OTHER TRUSS LAYOUTS. REVIEW AND APPROVAL OF THIS LAYOUT MUST BE RECEIVED BEFORE ANY TRUSSES WILL BE BUILT. VERIFY ALL CONDITIONS TO INSURE AGAINST CHANGES THAT WILL RESULT IN EXTRA CHARGES TO YOU.

Requested Delivery Date : _____

Approved By: _____ Date: _____

Builders FirstSource

Bunnell
PHONE: 904-437-3349 FAX: 904-437-3994

Jacksonville
PHONE: 904-772-6100 FAX: 904-772-1973

Lake City
PHONE: 904-755-6894 FAX: 904-755-7973

Sanford
PHONE: 407-322-0059 FAX: 407-322-5553

BUILDER:	Josh Sparks
LEGAL ADDRESS:	Emerald Forrest
MODEL:	LOT 50
REVISION:	
SCALE:	NTS
DATE:	9/27/05
DRAWN BY:	ROBERT GULOTTI
JOB #:	L132306