ITW Building Components Group, Inc.

1950 Marley Drive Haines City, FL 33844
Florida Engineering Certificate of Authorization Number: 0 278
Florida Certificate of Product Approval # FL1999
Page 1 of 1 Document ID:1UM4487-Z0316072512

WALTER P. FINN
LICENSE
No. 22839
STATE OF FLORIDA
PROFESSIONAL ENGINEER
05/16/2012

Truss Fabricator:	Anderson Truss Company
Job Identification:	12-089--BRYAN ZECHER Garrison Res. -- , **
Truss Count:	64
Model Code:	Florida Building Code
Truss Criteria:	FBC2010Res/TPI-2007(STD)
Engineering Software:	Alpine Software,Version 10.03.
Structural Engineer of Record:	The identity of the structural EOR did not exist as of
Address:	the seal date per section 61G15-31.003(5a) of the FAC
Minimum Design Loads:	Roof - 40.0 PSF @ 1.25 Duration
	Floor - N/A
	Wind - 120 MPH ASCE 7-10 -Closed

Notes:

1. Determination as to the suitability of these truss components for the structure is the responsibility of the building designer/engineer of record, as defined in ANSI/TPI 1
2. The drawing date shown on this index sheet must match the date shown on the individual truss component drawing.
3. As shown on attached drawings; the drawing number is preceded by: HCUSR487

Walter P. Finn
-Truss Design Engineer-

1950 Marley Drive
Haines City, FL 33844

Details: BRCLBSUB-CNNAILSP-

#	Ref Description	Drawing#	Date
1	81712--A 44'4" Flat	12137001	05/16/12
2	81713-A1 37'2"8 Common	12137002	05/16/12
3	81714-AT1 37'2"8 Commo	12137003	05/16/12
4	81715-H13A 44'4" Stepd	12137004	05/16/12
5	81716-H15A 37'2"8 Comm	12137005	05/16/12
6	81717--H21A 44'4" Flat	12137006	05/16/12
7	81718-F7A 33'2" Flat G	12137042	05/16/12
8	81719-HS11A 36'2" Flat	12137007	05/16/12
9	81720-HS13A 36'2" Flat	12137008	05/16/12
10	81721-HS15A 36'2" Flat	12137009	05/16/12
11	81722-HS17A 36'2" Flat	12137010	05/16/12
12	81723-HS19A 36'2" Flat	12137011	05/16/12
13	81724--HS9A 33'2" Flat	12137012	05/16/12
14	81725-AT 32'4"8 Common	12137013	05/16/12
15	81726-H11AT 44'4" Step	12137043	05/16/12
16	81727-H7AT 38'2"8 Step	12137044	05/16/12
17	81728-H9AT 38'2"8 Step	12137014	05/16/12
18	81729-HT17A 37'2"8 Com	12137015	05/16/12
19	81730-HT19A 37'2"8 Com	12137016	05/16/12
20	81731-HT21A 37'2"8 Com	12137017	05/16/12
21	81732--B 21'8" Common	12137018	05/16/12
22	81733--B1 21'8" Common	12137019	05/16/12
23	81734-BS 10'9"4 Common	12137020	05/16/12
24	81735-H7B 21'8" Common	12137045	05/16/12
25	81736-H7B1 21'8" Stepd	12137046	05/16/12
26	81737-H9B 21'8" Common	12137021	05/16/12
27	81738-H9B1 21'8" Stepd	12137022	05/16/12
28	81739--C 17'2" Common	12137023	05/16/12
29	81740-CG 17'2" Common	12137047	05/16/12
30	81741-H7C 17'2" Stepdo	12137048	05/16/12
31	81742--D 10'8" Common	12137024	05/16/12
32	81743-H5D 10'8" Stepdo	12137049	05/16/12
33	81744--E 9'9" Common	12137025	05/16/12
34	81745-H3E 9'9" Stepdow	12137050	05/16/12
35	81746-F5H 17'2" Flat G	12137051	05/16/12
36	81747-F7H 17'2" Flat G	12137052	05/16/12
37	81748-H5G 10'11" Stepd	12137063	05/16/12
38	81749--CJ1 1' Jack	12137026	05/16/12
39	81750--CJ1 1' Jack	12137027	05/16/12
40	81751--CJ1S 1' Jack	12137028	05/16/12
41	81752--CJ3 3' Jack	12137029	05/16/12
42	81753--CJ31 3' Jack	12137030	05/16/12
43	81754--CJ3B 3' Jack	12137031	05/16/12
44	81755--CJ3S 3' Jack	12137032	05/16/12
45	81756--CJ3S1 3' Jack	12137033	05/16/12
46	81757--CJ3T 3' Jack	12137062	05/16/12
47	81758--CJ5 5' Jack	12137034	05/16/12
48	81759--CJ5B 5' Jack	12137035	05/16/12
49	81760--CJ5T 5' Jack	12137036	05/16/12
50	81761-EJ11B 7' Common	12137053	05/16/12
51	81762-EJ5S 5' End Jack	12137037	05/16/12
52	81763--EJ7 7' End Jack	12137038	05/16/12
53	81764-EJ7B 7' End Jack	12137039	05/16/12
54	81765-EJ7G 7' Common G	12137054	05/16/12
55	81766-EJ7T 7' End Jack	12137040	05/16/12
56	81767-EJ9B 7' End Jack	12137041	05/16/12
57	81768-HJ3 4'2"15 Hip J	12137055	05/16/12
58	81769-HJ3 4'2"15 Hip J	12137056	05/16/12
59	81770-HJ5 7'0"14 Hip J	12137057	05/16/12
60	81771-HJ5S 7'0"14 Hip	12137058	05/16/12
61	81772-HJ7 9'10"13 Hip	12137064	05/16/12
62	81773-HJ7T 9'10"13 Hip	12137059	05/16/12
63	81774-MG1 6' Mono Gird	12137060	05/16/12
64	81775-MG2 11' End Jack	12137061	05/16/12

COLUMBIA COUNTY BUILDING DEPARTMENT
Received for FILE COPY
Code Compliance
PLANS EXAMINER

(12-089--BRYAN ZECHER Garrison Res. -- , ** - A 44'4" Flat)

THIS DWG PREPARED FROM COMPUTER INPUT (LOADS & DIMENSIONS) SUBMITTED BY TRUSS MFR.

Top chord 2x4 SP #1
Bot chord 2x4 SP #1
Webs 2x4 SP #3

Roof overhang supports 2.00 psf soffit load.

(a) Continuous lateral bracing equally spaced on member.

Bottom chord checked for 10.00 psf non-concurrent live load.

Deflection meets L/240 live and L/180 total load. Creep increase factor for dead load is 1.50.

120 mph wind, 15.00 ft mean hgt, ASCE 7-10, CLOSED bldg, not located within 13.00 ft from roof edge, RISK CAT II, EXP C, wind TC DL=5.0 psf, wind BC DL=5.0 psf. GCpi(+/-)=0.18

Wind loads and reactions based on MWFRS with additional C&C member design.

Truss passed check for 20 psf additional bottom chord live load in areas with 42"-high x 24"-wide clearance.

MWFRS loads based on trusses located at least 15.00 ft. from roof edge.

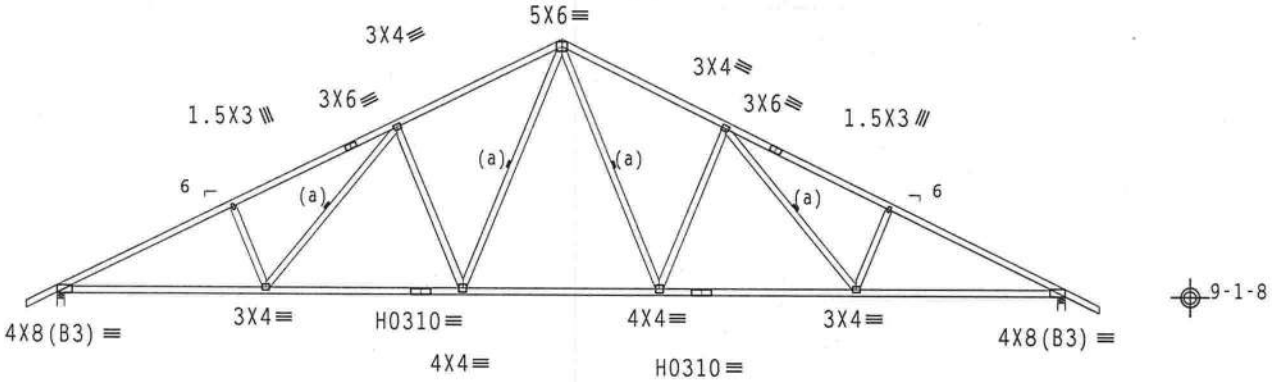

R=2189 U=0 W=4"
RL=292/-291

Design Crit: FBC2010Res/TPI-2007(STD) FT/RT=20%(0%)/0(0) 10.03.1[illegible] QTY: FL/-/4/-/-/R/- Scale =.125"/Ft.

PLT TYP. 20 Gauge HS,Wave

ALPINE
ITW Building Components Group Inc.
Haines City, FL 33844
FL COA #0 278

WARNING READ AND FOLLOW ALL NOTES ON THIS SHEET!
IMPORTANT FURNISH THIS DESIGN TO ALL CONTRACTORS INCLUDING INSTALLERS.

Trusses require extreme care in fabricating, handling, shipping, installing and bracing. Refer to and follow the latest edition of BCSI (Building Component Safety Information, by TPI and WTCA) for safety practices prior to performing these functions. Installers shall provide temporary bracing per BCSI. Unless noted otherwise, top chord shall have properly attached structural sheathing and bottom chord shall have a properly attached rigid ceiling. Locations shown for permanent lateral restraint of webs shall have bracing installed per BCSI sections B3, B7 or B10, as applicable.

ITW Building Components Group Inc. (ITWBCG) shall not be responsible for any deviation from this design, any failure to build the truss in conformance with ANSI/TPI 1, or for handling, shipping, installation and bracing of trusses. Apply plates to each face of truss and position as shown above and on the Joint Details, unless noted otherwise. Refer to drawings 160A-Z for standard plate positions. A seal on this drawing or cover page listing this drawing, indicates acceptance of professional engineering responsibility solely for the design shown. The suitability and use of this design for any structure is the responsibility of the Building Designer per ANSI/TPI 1 Sec.2. For more information see: This job's general notes page; ITW-BCG: www.itwbcg.com; TPI: www.tpinst.org; WTCA: www.sbcindustry.com; ICC: www.iccsafe.org

WALTER P. FINN LICENSE No. 22839 STATE OF FLORIDA PROFESSIONAL ENGINEER
05/16/2012

TC LL	20.0 PSF	REF	R487-- 81712
TC DL	10.0 PSF	DATE	05/16/12
BC DL	10.0 PSF	DRW	HCUSR487 12137001
BC LL	0.0 PSF	HC-ENG	JB/WPF
TOT.LD.	40.0 PSF	SEQN-	95450
DUR.FAC.	1.25		
SPACING	24.0"	JREF-	1UM4487_Z03

(12-089--BRYAN ZECHER Garrison Res. -- , ** - A1 37'2"8 Common)

Top chord 2x4 SP #1
Bot chord 2x4 SP #1
Webs 2x4 SP #3

Left end vertical not exposed to wind pressure.

Roof overhang supports 2.00 psf soffit load.

These support conditions used at bearings indicated
(H1) = Simpson HUS26 w/ (1)2x6 SP M-26 supporting member.
(14) 0.148"x3" nails into supporting member,
(4) 0.148"x3" nails into supported member.

Bottom chord checked for 10.00 psf non-concurrent live load.

MWFRS loads based on trusses located at least 15.00 ft. from roof edge.

120 mph wind, 15.00 ft mean hgt, ASCE 7-10, CLOSED bldg, not located within 9.00 ft from roof edge, RISK CAT II, EXP C, wind TC DL=5.0 psf, wind BC DL=5.0 psf. GCpi(+/-)=0.18

Wind loads and reactions based on MWFRS with additional C&C member design.

H = recommended connection based on manufacturer tested capacities and calculations. Conditions may exist that require different connections than indicated. Refer to manufacturer publication for additional information.

(a) Continuous lateral bracing equally spaced on member.

Deflection meets L/240 live and L/180 total load. Creep increase factor for dead load is 1.50.

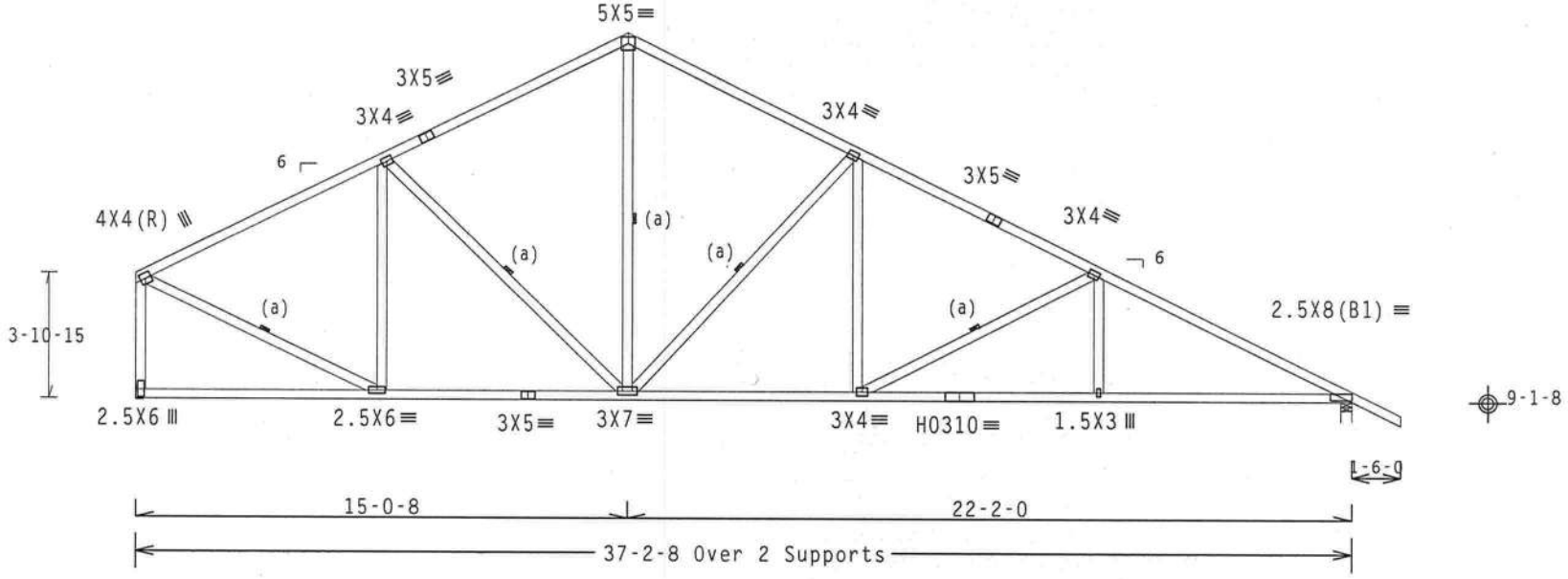

R=1524 U=0
RL=215/-241 H=Simpson HUS26
Supported Member Face: (4) 0.148"x3" nails
Supporting Member Face: (14) 0.148"x3" nails
Supporting Member : (1) 2x6 SP M-26

R=1641 U=0 W=4"

Design Crit: FBC2010Res/TPI-2007(STD)

PLT TYP. 20 Gauge HS,Wave FT/RT=20%(0%)/0(0) 10.03.11.0209.20 QTY 1 FL/-/4/-/-/R/- Scale =.1875"/Ft.

ALPINE
ITW Building Components Group Inc.
Haines City, FL 33844
FL COA #0 278

WARNING READ AND FOLLOW ALL NOTES ON THIS SHEET!
IMPORTANT FURNISH THIS DESIGN TO ALL CONTRACTORS INCLUDING INSTALLERS.

Trusses require extreme care in fabricating, handling, shipping, installing and bracing. Refer to and follow the latest edition of BCSI (Building Component Safety Information, by TPI and WTCA) for safety practices prior to performing these functions. Installers shall provide temporary bracing per BCSI. Unless noted otherwise, top chord shall have properly attached structural sheathing and bottom chord shall have a properly attached rigid ceiling. Locations shown for permanent lateral restraint of webs shall have bracing installed per BCSI sections B3, B7 or B10, as applicable.

ITW Building Components Group Inc. (ITWBCG) shall not be responsible for any deviation from this design, any failure to build the truss in conformance with ANSI/TPI 1, or for handling, shipping, installing and bracing of trusses. Apply plates to each face of truss and position as shown above and on the Joint Details, unless noted otherwise. Refer to drawings 160A-Z for standard plate positions. A seal on this drawing or cover page listing this drawing, indicates acceptance of professional engineering responsibility solely for the design shown. The suitability and use of this design for any structure is the responsibility of the Building Designer per ANSI/TPI 1 Sec.2. For more information see: This job's general notes page; ITW-BCG: www.itwbcg.com; TPI: www.tpinst.org; WTCA: www.sbcindustry.com; ICC: www.iccsafe.org

WALTER P. FINN LICENSE No.22839 STATE OF FLORIDA PROFESSIONAL ENGINEER
05/16/2012

TC LL	20.0 PSF	REF	R487-- 81713
TC DL	10.0 PSF	DATE	05/16/12
BC DL	10.0 PSF	DRW	HCUSR487 12137002
BC LL	0.0 PSF	HC-ENG	JB/WPF
TOT.LD.	40.0 PSF	SEQN-	96047
DUR.FAC.	1.25		
SPACING	24.0"	JREF-	1UM4487_Z03

(12-089--BRYAN ZECHER Garrison Res. -- , ** - AT1 37'2"8 Common)

THIS DWG PREPARED FROM COMPUTER INPUT (LOADS & DIMENSIONS) SUBMITTED BY TRUSS MFR.

Top chord 2x4 SP #1
Bot chord 2x4 SP #1
Webs 2x4 SP #3 :W3 2x6 SP #2:

Left end vertical not exposed to wind pressure.

Roof overhang supports 2.00 psf soffit load.

H = recommended connection based on manufacturer tested capacities and calculations. Conditions may exist that require different connections than indicated. Refer to manufacturer publication for additional information.

(a) Continuous lateral bracing equally spaced on member.

Bottom chord checked for 10.00 psf non-concurrent live load.

MWFRS loads based on trusses located at least 15.00 ft. from roof edge.

120 mph wind, 15.00 ft mean hgt, ASCE 7-10, CLOSED bldg, not located within 9.00 ft from roof edge, RISK CAT II, EXP C, wind TC DL=5.0 psf, wind BC DL=5.0 psf, GCpi(+/-)=0.18

Wind loads and reactions based on MWFRS with additional C&C member design.

Calculated horizontal deflection is 0.12" due to live load and 0.18" due to dead load.

These support conditions used at bearings indicated
(H1) = Simpson HUS26 w/ (1)2x6 SP M-26 supporting member.
(14) 0.148"x3" nails into supporting member.
(4) 0.148"x3" nails into supported member.

Deflection meets L/240 live and L/180 total load. Creep increase factor for dead load is 1.50.

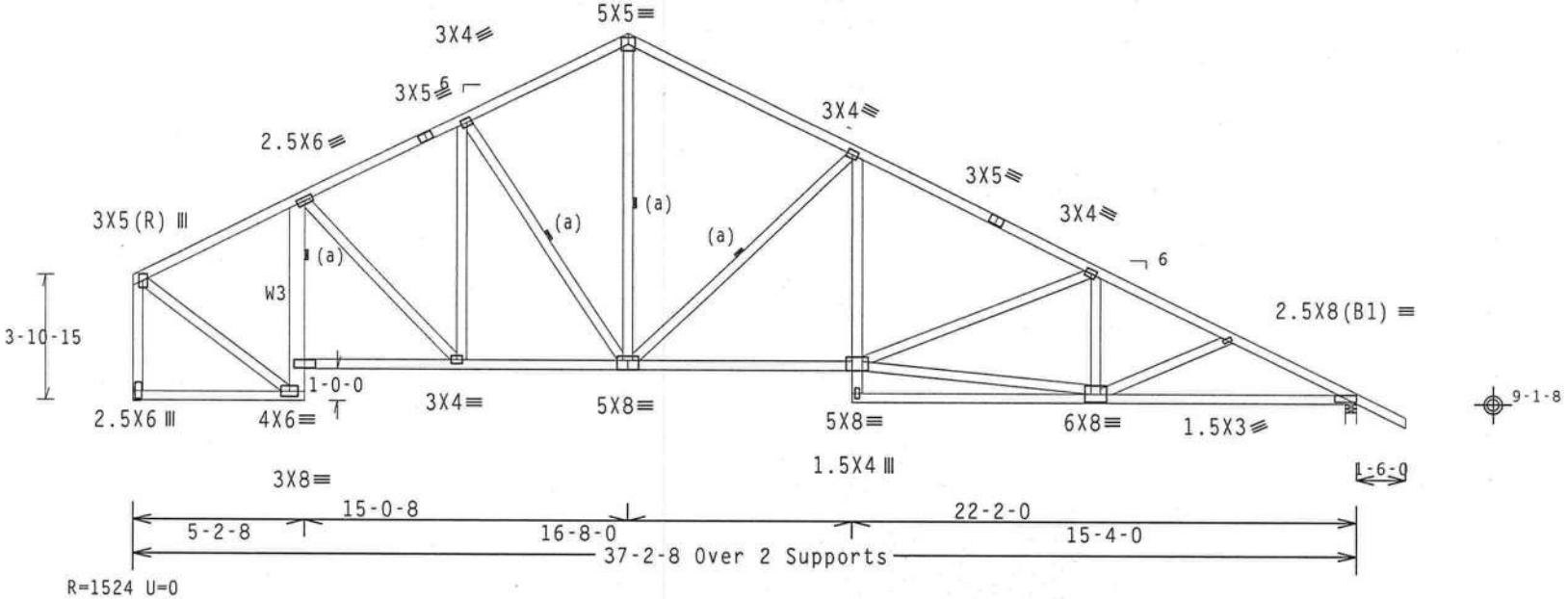

R=1524 U=0
RL=215/-241 H=Simpson HUS26
Supported Member Face: (4) 0.148"x3" nails
Supporting Member Face: (14) 0.148"x3" nails
Supporting Member : (1) 2x6 SP #2

R=1641 U=0 W=4"

PLT TYP. Wave

Design Crit: FBC2010Res/TPI-2007(STD) FT/RT=20%(0%)/0(0) 10:03 11 0309 20 QTY:1 FL/-/4/-/-/R/- Scale =.1875"/Ft.

ALPINE
ITW Building Components Group Inc.
Haines City, FL 33844
FL COA #0 278

WARNING READ AND FOLLOW ALL NOTES ON THIS SHEET!
IMPORTANT FURNISH THIS DESIGN TO ALL CONTRACTORS INCLUDING INSTALLERS.

Trusses require extreme care in fabricating, handling, shipping, installing and bracing. Refer to and follow the latest edition of BCSI (Building Component Safety Information, by TPI and WTCA) for safety practices prior to performing these functions. Installers shall provide temporary bracing per BCSI. Unless noted otherwise, top chord shall have properly attached structural sheathing and bottom chord shall have a properly attached rigid ceiling. Locations shown for permanent lateral restraint of webs shall have bracing installed per BCSI sections B3, B7 or B10, as applicable.

ITW Building Components Group Inc. (ITWBCG) shall not be responsible for any deviation from this drawing, any failure to build the truss in conformance with ANSI/TPI 1, or for handling, shipping, installing and bracing of trusses. Apply plates to each face of truss and position as shown above and on the Joint Details, unless noted otherwise. Refer to drawings 160A-Z for standard plate positions. A seal on this drawing or cover page listing this drawing, indicates acceptance of professional engineering responsibility solely for the design shown. The suitability and use of this design for any structure is the responsibility of the Building Designer per ANSI/TPI 1 Sec.2. For more information see: This job's general notes page; ITW-BCG: www.itwbcg.com; TPI: www.tpinst.org; WTCA: www.sbcindustry.com; ICC: www.iccsafe.org

WALTER P. FINN LICENSE No.22839 STATE OF FLORIDA PROFESSIONAL ENGINEER
05/16/2012

TC LL	20.0 PSF	REF R487-- 81714
TC DL	10.0 PSF	DATE 05/16/12
BC DL	10.0 PSF	DRW HCUSR487 12137003
BC LL	0.0 PSF	HC-ENG JB/WPF
TOT.LD.	40.0 PSF	SEQN- 95960
DUR.FAC.	1.25	
SPACING	24.0"	JREF- 1UM4487_Z03

(12-089--BRYAN ZECHER Garrison Res. -- , ** - H13A 44'4" Stepdown Hip)

THIS DWG PREPARED FROM COMPUTER INPUT (LOADS & DIMENSIONS) SUBMITTED BY TRUSS MFR.

Top chord 2x4 SP #1
Bot chord 2x4 SP #1
Webs 2x4 SP #3

Roof overhang supports 2.00 psf soffit load.

(a) 1x4 #3SRB SPF-S or better "T" brace. 80% length of web member. Attach with 8d Box or Gun (0.113"x2.5",min.)nails @ 6" OC.

Bottom chord checked for 10.00 psf non-concurrent live load.

MWFRS loads based on trusses located at least 7.50 ft. from roof edge.

120 mph wind, 15.00 ft mean hgt, ASCE 7-10, CLOSED bldg, not located within 13.00 ft from roof edge, RISK CAT II, EXP C, wind TC DL=5.0 psf, wind BC DL=5.0 psf. GCpi(+/-)=0.18

Wind loads and reactions based on MWFRS with additional C&C member design.

In lieu of structural panels use purlins to brace all flat TC @ 24" OC.

Deflection meets L/240 live and L/180 total load. Creep increase factor for dead load is 1.50.

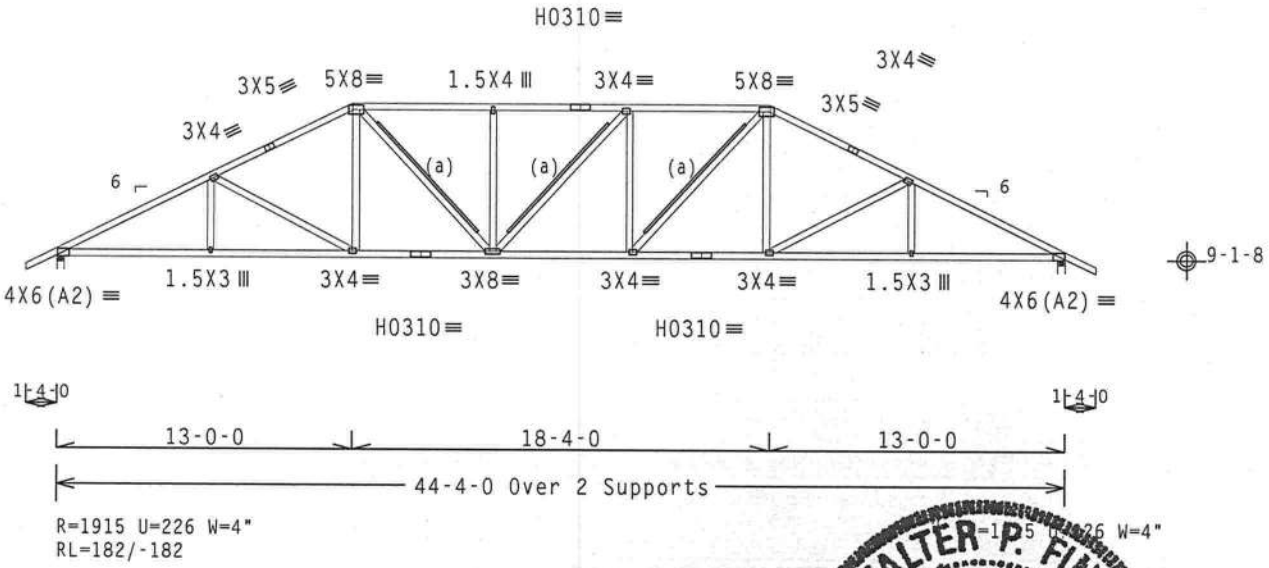

Design Crit: FBC2010Res/TPI-2007(STD) 10.03 11.0209 20 QTY 1 FL/-/4/-/-/R/- Scale =.125"/Ft.

PLT TYP. 20 Gauge HS,Wave FT/RT=20%(0%)/0(0)

ALPINE
ITW Building Components Group Inc.
Haines City, FL 33844
FL COA #0 278

WARNING READ AND FOLLOW ALL NOTES ON THIS SHEET!
IMPORTANT FURNISH THIS DESIGN TO ALL CONTRACTORS INCLUDING INSTALLERS.

Trusses require extreme care in fabricating, handling, shipping, installing and bracing. Refer to and follow the latest edition of BCSI (Building Component Safety Information, by TPI and WTCA) for safety practices prior to performing these functions. Installers shall provide temporary bracing per BCSI. Unless noted otherwise, top chord shall have properly attached structural sheathing and bottom chord shall have a properly attached rigid ceiling. Locations shown for permanent lateral restraint of webs shall have bracing installed per BCSI sections B3, B7 or B10, as applicable.

ITW Building Components Group Inc. (ITWBCG) shall not be responsible for any deviation from this design, any failure to build the truss in conformance with ANSI/TPI 1, or for handling, shipping, installing and bracing of trusses. Apply plates to each face of truss and position as shown above and on the Joint Details, unless noted otherwise. Refer to drawings 160A-Z for standard plate positions. A seal on this drawing or cover page listing this drawing, indicates acceptance of professional engineering responsibility solely for the design shown. The suitability and use of this design for any structure is the responsibility of the Building Designer per ANSI/TPI 1 Sec.2. For more information see: This job's general notes page; ITW-BCG: www.itwbcg.com; TPI: www.tpinst.org; WTCA: www.sbcindustry.com; ICC: www.iccsafe.org

WALTER P. FINN LICENSE No. 22839 STATE OF FLORIDA PROFESSIONAL ENGINEER
05/16/2012

TC LL	20.0 PSF	REF	R487-- 81715
TC DL	10.0 PSF	DATE	05/16/12
BC DL	10.0 PSF	DRW	HCUSR487 12137004
BC LL	0.0 PSF	HC-ENG	JB/WPF
TOT.LD.	40.0 PSF	SEQN-	95808
DUR.FAC.	1.25		
SPACING	24.0"	JREF-	1UM4487_Z03

(12-089--BRYAN ZECHER Garrison Res. -- , ** - H15A 37'2"8 Common)

THIS DWG PREPARED FROM COMPUTER INPUT (LOADS & DIMENSIONS) SUBMITTED BY TRUSS MFR.

Top chord 2x4 SP #1
Bot chord 2x4 SP #1
Webs 2x4 SP #3

Left end vertical not exposed to wind pressure.

Roof overhang supports 2.00 psf soffit load.

These support conditions used at bearings indicated
(H1) = Simpson HUS26 w/ (1)2x6 SP M-26 supporting member.
(14) 0.148"x3" nails into supporting member.
(4) 0.148"x3" nails into supported member.

In lieu of structural panels use purlins to brace all flat TC @ 24" OC.

Deflection meets L/240 live and L/180 total load. Creep increase factor for dead load is 1.50.

120 mph wind, 15.00 ft mean hgt, ASCE 7-10, CLOSED bldg, not located within 9.00 ft from roof edge, RISK CAT II, EXP C, wind TC DL=5.0 psf, wind BC DL=5.0 psf. GCpi(+/-)=0.18

Wind loads and reactions based on MWFRS with additional C&C member design.

H = recommended connection based on manufacturer tested capacities and calculations. Conditions may exist that require different connections than indicated. Refer to manufacturer publication for additional information.

(a) Continuous lateral bracing equally spaced on member.

Bottom chord checked for 10.00 psf non-concurrent live load.

MWFRS loads based on trusses located at least 15.00 ft. from roof edge.

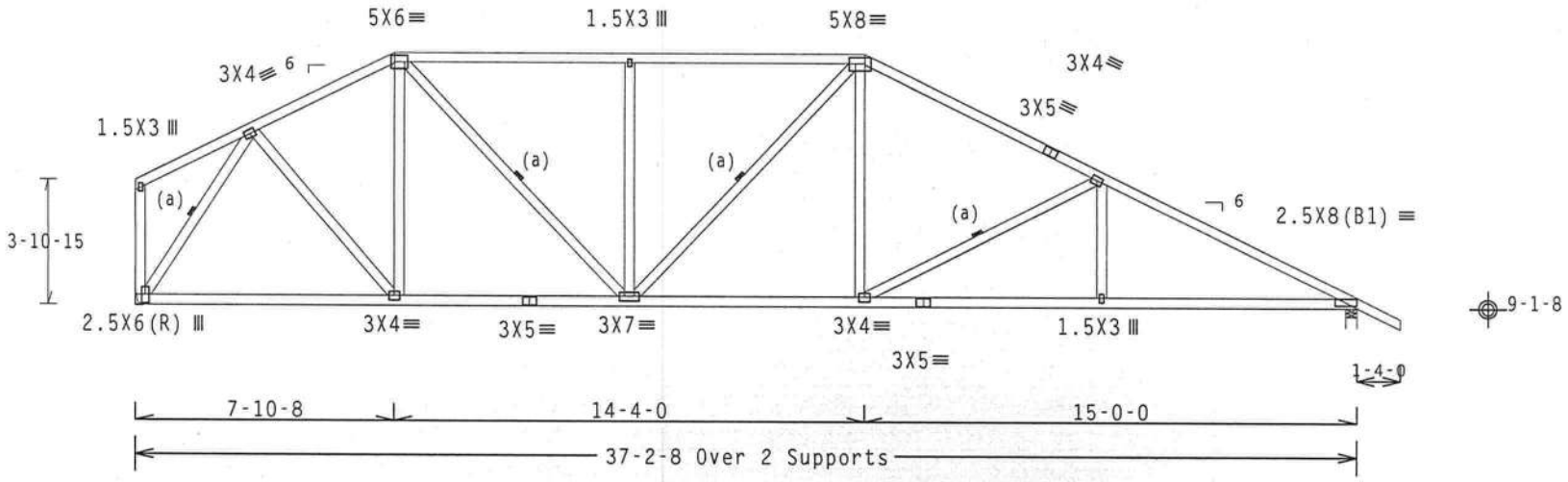

R=1524 U=17
RL=131/-158 H=Simpson HUS26
Supported Member Face: (4) 0.148"x3" nails
Supporting Member Face: (14) 0.148"x3" nails
Supporting Member : (1) 2x6 SP #2

R=1629 U=37 W=4"

Design Crit: FBC2010Res/TPI-2007(STD)
FT/RT=20%(0%)/0(0)

PLT TYP. Wave | 10/03.11.0300.30 | QTY 1 | FL/-/4/-/-/R/- | Scale =.1875"/Ft.

ALPINE
ITW Building Components Group Inc.
Haines City, FL 33844
FL COA #0 278

WARNING READ AND FOLLOW ALL NOTES ON THIS SHEET!
IMPORTANT FURNISH THIS DESIGN TO ALL CONTRACTORS INCLUDING INSTALLERS.

Trusses require extreme care in fabricating, handling, shipping, installing and bracing. Refer to and follow the latest edition of BCSI (Building Component Safety Information, by TPI and WTCA) for safety practices prior to performing these functions. Installers shall provide temporary bracing per BCSI. Unless noted otherwise, top chord shall have properly attached structural sheathing and bottom chord shall have a properly attached rigid ceiling. Locations shown for permanent lateral restraint of webs shall have bracing installed per BCSI sections B3, B7 or B10, as applicable.

ITW Building Components Group Inc. (ITWBCG) shall not be responsible for any deviation from this design, any failure to build the truss in conformance with ANSI/TPI 1, or for handling, shipping, installing and bracing of trusses. Apply plates to each face of truss and position as shown above and on the Joint Details, unless noted otherwise. Refer to drawings 160A-Z for standard plate positions. A seal on this drawing or cover page listing this drawing, indicates acceptance of professional engineering responsibility solely for the design shown. The suitability and use of this design for any structure is the responsibility of the Building Designer per ANSI/TPI 1 Sec.2. For more information see: This job's general notes page; ITW-BCG: www.itwbcg.com; TPI: www.tpinst.org; WTCA: www.sbcindustry.com; ICC: www.iccsafe.org

WALTER P. FINN
LICENSE
No.22839
STATE OF FLORIDA
PROFESSIONAL ENGINEER
05/16/2012

TC LL	20.0 PSF	REF	R487-- 81716
TC DL	10.0 PSF	DATE	05/16/12
BC DL	10.0 PSF	DRW	HCUSR487 12137005
BC LL	0.0 PSF	HC-ENG	JB/WPF
TOT.LD.	40.0 PSF	SEQN-	95816
DUR.FAC.	1.25		
SPACING	24.0"	JREF-	1UM4487_Z03

(12-089--BRYAN ZECHER Garrison Res. -- , ** - H21A 44'4" Flat)

THIS DWG PREPARED FROM COMPUTER INPUT (LOADS & DIMENSIONS) SUBMITTED BY TRUSS MFR.

Top chord 2x4 SP #1
Bot chord 2x4 SP #1
Webs 2x4 SP #3

Roof overhang supports 2.00 psf soffit load.

(a) Continuous lateral bracing equally spaced on member.

Bottom chord checked for 10.00 psf non-concurrent live load.

Deflection meets L/240 live and L/180 total load. Creep increase factor for dead load is 1.50.

120 mph wind, 15.00 ft mean hgt, ASCE 7-10, CLOSED bldg, not located within 13.00 ft from roof edge, RISK CAT II, EXP C, wind TC DL=5.0 psf, wind BC DL=5.0 psf. GCpi(+/-)=0.18

Wind loads and reactions based on MWFRS with additional C&C member design.

In lieu of structural panels use purlins to brace all flat TC @ 24" OC.

MWFRS loads based on trusses located at least 15.00 ft. from roof edge.

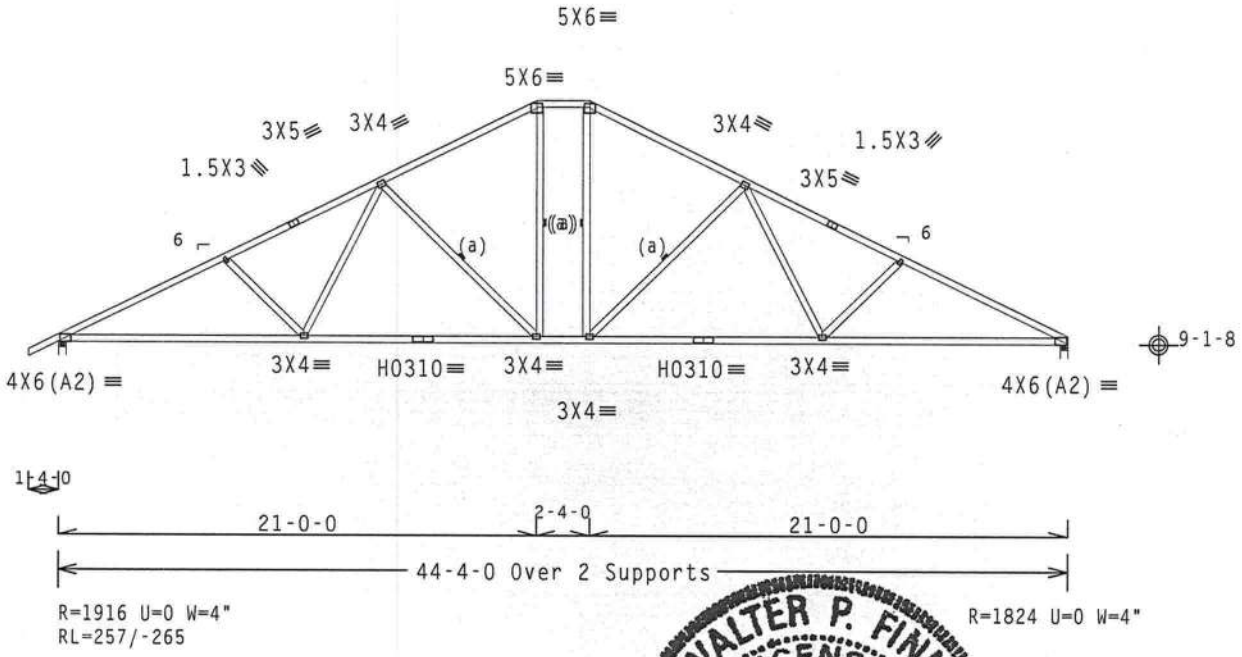

PLT TYP. 20 Gauge HS,Wave

Design Crit: FBC2010Res/TPI-2007(STD)
FT/RT=20%(0%)/0(0)

10-03-11 0809-80 QTY 1

FL/-/4/-/-/R/-

Scale =.125"/Ft.

ALPINE
ITW Building Components Group Inc.
Haines City, FL 33844
FL COA #0 278

WARNING READ AND FOLLOW ALL NOTES ON THIS SHEET!
IMPORTANT FURNISH THIS DESIGN TO ALL CONTRACTORS INCLUDING INSTALLERS.

Trusses require extreme care in fabricating, handling, shipping, installing and bracing. Refer to and follow the latest edition of BCSI (Building Component Safety Information, by TPI and WTCA) for safety practices prior to performing these functions. Installers shall provide temporary bracing per BCSI. Unless noted otherwise, top chord shall have properly attached structural sheathing and bottom chord shall have a properly attached rigid ceiling. Locations shown for permanent lateral restraint of webs shall have bracing installed per BCSI sections B3, B7 or B10, as applicable.

ITW Building Components Group Inc. (ITWBCG) shall not be responsible for any deviation from this design, any failure to build the truss in conformance with ANSI/TPI 1, or for handling, shipping, installing and bracing of trusses. Apply plates to each face of truss and position as shown above and on the Joint Details, unless noted otherwise. Refer to drawings 160A-Z for standard plate positions. A seal on this drawing or cover page listing this drawing, indicates acceptance of professional engineering responsibility solely for the design shown. The suitability and use of this design for any structure is the responsibility of the Building Designer per ANSI/TPI 1 Sec.2. For more information see: This job's general notes page; ITW-BCG: www.itwbcg.com; TPI: www.tpinst.org; WTCA: www.sbcindustry.com; ICC: www.iccsafe.org

WALTER P. FINN
LICENSE
No. 22839
STATE OF FLORIDA
PROFESSIONAL ENGINEER
05/16/2012

TC LL	20.0 PSF	REF	R487-- 81717
TC DL	10.0 PSF	DATE	05/16/12
BC DL	10.0 PSF	DRW	HCUSR487 12137006
BC LL	0.0 PSF	HC-ENG	JB/WPF
TOT.LD.	40.0 PSF	SEQN-	95453
DUR.FAC.	1.25		
SPACING	24.0"	JREF-	1UM4487_Z03

(12-089--BRYAN ZECHER Garrison Res. -- , ** - F7A 33'2" Flat Girder)

THIS DWG PREPARED FROM COMPUTER INPUT (LOADS & DIMENSIONS) SUBMITTED BY TRUSS MFR.

Top chord 2x6 SP #2
Bot chord 2x6 SP #2 :B2 2x6 SP #1 Dense:
Webs 2x4 SP #3 :W2, W10 2x4 SP #1:

End verticals not exposed to wind pressure.

Max JT VERT DEFL: LL: 0.32" DL: 0.52" recommended camber 7/8"

These support conditions used at bearings indicated
(H1) = Simpson HUS26 w/ (2)2x6 SP M-26 supporting member.
(14) 0.162"x3.5" nails into supporting member,
(6) 0.162"x3.5" nails into supported member.

Deflection meets L/240 live and L/180 total load. Creep increase factor for dead load is 1.50.

The TC of this truss shall be braced with attached spans at 24" OC in lieu of structural sheathing.

120 mph wind, 15.00 ft mean hgt, ASCE 7-10, CLOSED bldg, Located anywhere in roof, RISK CAT II, EXP C, wind TC DL=5.0 psf, wind BC DL=5.0 psf. GCpi(+/-)=0.18

Wind loads and reactions based on MWFRS with additional C&C member design.

H = recommended connection based on manufacturer tested capacities and calculations. Conditions may exist that require different connections than indicated. Refer to manufacturer publication for additional information.

Girder supports 7-0-0 span to TC/BC split one face and 2-0-0 span to TC/BC split opposite face.

Truss must be installed as shown with top chord up.

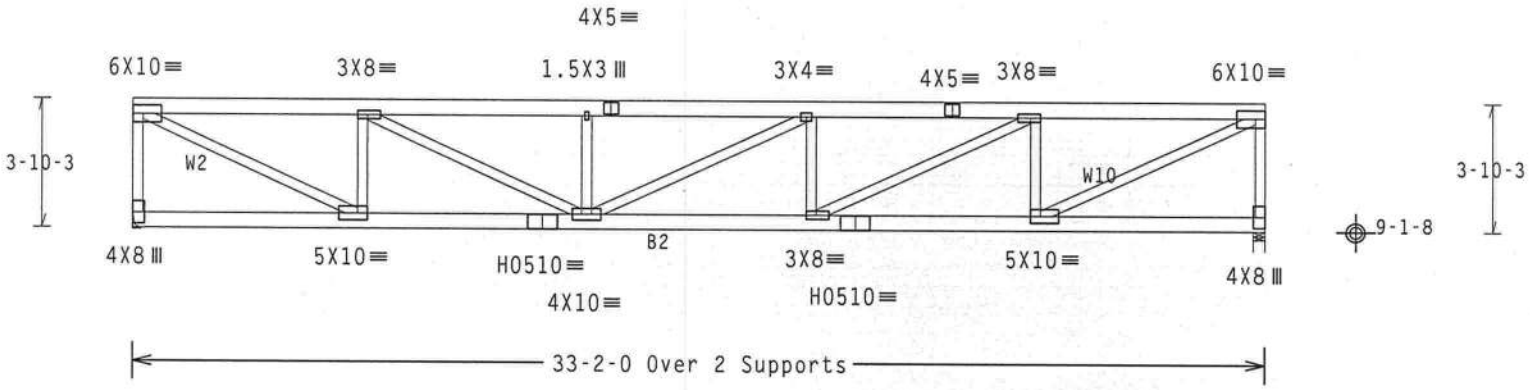

R=3070 U=335 H=Simpson HUS26
Supported Member Face: (6) 0.162"x3.5" nails
Supporting Member Face: (14) 0.162"x3.5" nails
Supporting Member : (2) 2x6 SP #1 Dense

R=3062 U=335 W=4"

Design Crit: FBC2010Res/TPI-2007(STD)

PLT TYP. 20 Gauge HS,Wave FT/RT=20%(0%)/0(0) 10.03.11.0209.20 QTY 1 FL/-/4/-/-/R/- Scale =.1875"/Ft.

ALPINE
ITW Building Components Group Inc.
Haines City, FL 33844
FL COA #0 278

WARNING READ AND FOLLOW ALL NOTES ON THIS SHEET!
IMPORTANT FURNISH THIS DESIGN TO ALL CONTRACTORS INCLUDING INSTALLERS.

Trusses require extreme care in fabricating, handling, shipping, installing and bracing. Refer to and follow the latest edition of BCSI (Building Component Safety Information, by TPI and WTCA) for safety practices prior to performing these functions. Installers shall provide temporary bracing per BCSI. Unless noted otherwise, top chord shall have properly attached structural sheathing and bottom chord shall have a properly attached rigid ceiling. Locations shown for permanent lateral restraint of webs shall have bracing installed per BCSI sections B3, B7 or B10, as applicable.

ITW Building Components Group Inc. (ITWBCG) shall not be responsible for any deviation from this drawing, any failure to build the truss in conformance with ANSI/TPI 1, or for handling, shipping, installing and bracing of trusses. Apply plates to each face of truss and position as shown above and on the Joint Details, unless noted otherwise. Refer to drawings 160A-Z for standard plate positions. A seal on this drawing or cover page listing this drawing, indicates acceptance of professional engineering responsibility solely for the design shown. The suitability and use of this design for any structure is the responsibility of the Building Designer per ANSI/TPI 1 Sec.2. For more information see: This job's general notes page; ITW-BCG: www.itwbcg.com; TPI: www.tpinst.org; WTCA: www.sbcindustry.com; ICC: www.iccsafe.org

WALTER P. FINN LICENSE No.22839 STATE OF FLORIDA PROFESSIONAL ENGINEER
05/16/2012

TC LL	20.0 PSF	REF	R487-- 81718
TC DL	10.0 PSF	DATE	05/16/12
BC DL	10.0 PSF	DRW	HCUSR487 12137042
BC LL	0.0 PSF	HC-ENG	JB/WPF
TOT.LD.	40.0 PSF	SEQN-	95318
DUR.FAC.	1.25		
SPACING	24.0"	JREF-	1UM4487_Z03

(12-089--BRYAN ZECHER Garrison Res. -- , ** - HS11A 36'2" Flat)

THIS DWG PREPARED FROM COMPUTER INPUT (LOADS & DIMENSIONS) SUBMITTED BY TRUSS MFR.

Top chord 2x4 SP #1
Bot chord 2x4 SP #1
Webs 2x4 SP #3

H = recommended connection based on manufacturer tested capacities and calculations. Conditions may exist that require different connections than indicated. Refer to manufacturer publication for additional information.

These support conditions used at bearings indicated
(H1) = Simpson HUS26 w/ (2)2x6 SP M-26 supporting member.
(14) 0.148"x3" nails into supporting member,
(4) 0.148"x3" nails into supported member.

Bottom chord checked for 10.00 psf non-concurrent live load.

MWFRS loads based on trusses located at least 7.50 ft. from roof edge.

120 mph wind, 15.00 ft mean hgt, ASCE 7-10, CLOSED bldg, not located within 9.00 ft from roof edge, RISK CAT II, EXP C, wind TC DL=5.0 psf, wind BC DL=5.0 psf. GCpi(+/-)=0.18

Wind loads and reactions based on MWFRS with additional C&C member design.

Right end vertical not exposed to wind pressure.

(a) Continuous lateral bracing equally spaced on member.

In lieu of structural panels use purlins to brace all flat TC @ 24" OC.

Deflection meets L/240 live and L/180 total load. Creep increase factor for dead load is 1.50.

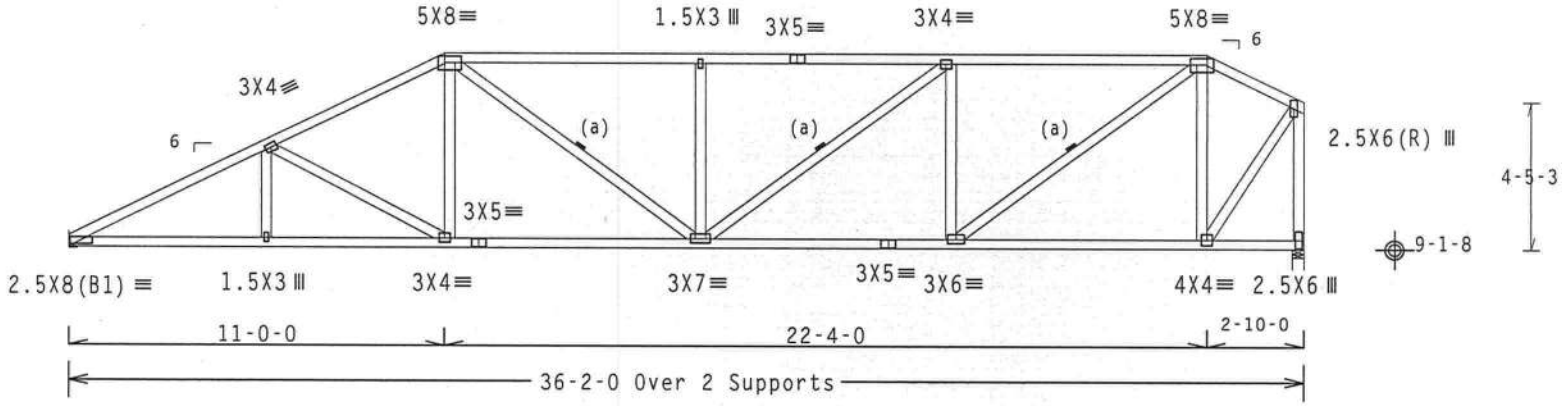

R=1495 U=165
RL=100/-57 H=Simpson HUS26
Supported Member Face: (4) 0.148"x3" nails
Supporting Member Face: (14) 0.148"x3" nails
Supporting Member : (2) 2x6 SP #2

R=1484 U=182 W=4"

PLT TYP. Wave

Design Crit: FBC2010Res/TPI-2007(STD) 10.03 11.0209 20 QTY 1 FL/-/4/-/-/R/-
FT/RT=20%(0%)/0(0)

Scale =.1875"/Ft.

ALPINE
ITW Building Components Group Inc.
Haines City, FL 33844
FL COA #0 278

WARNING READ AND FOLLOW ALL NOTES ON THIS SHEET!
IMPORTANT FURNISH THIS DESIGN TO ALL CONTRACTORS INCLUDING INSTALLERS.

Trusses require extreme care in fabricating, handling, shipping, installing and bracing. Refer to and follow the latest edition of BCSI (Building Component Safety Information, by TPI and WTCA) for safety practices prior to performing these functions. Installers shall provide temporary bracing per BCSI. Unless noted otherwise, top chord shall have properly attached structural sheathing and bottom chord shall have a properly attached rigid ceiling. Locations shown for permanent lateral restraint of webs shall have bracing installed per BCSI sections B3, B7 or B10, as applicable.

ITW Building Components Group Inc. (ITWBCG) shall not be responsible for any deviation from this design, any failure to build the truss in conformance with ANSI/TPI 1, or for handling, shipping, installing and bracing of trusses. Apply plates to each face of truss and position as shown above and on the Joint Details, unless noted otherwise. Refer to drawings 160A-Z for standard plate positions. A seal on this drawing or cover page listing this drawing, indicates acceptance of professional engineering responsibility solely for the design shown. The suitability and use of this design for any structure is the responsibility of the Building Designer per ANSI/TPI 1 Sec.2. For more information see: This job's general notes page; ITW-BCG: www.itwbcg.com; TPI: www.tpinst.org; WTCA: www.sbcindustry.com; ICC: www.iccsafe.org

WALTER P. FINN LICENSE No.22839 STATE OF FLORIDA PROFESSIONAL ENGINEER

05/16/2012

TC LL	20.0 PSF	REF	R487-- 81719
TC DL	10.0 PSF	DATE	05/16/12
BC DL	10.0 PSF	DRW	HCUSR487 12137007
BC LL	0.0 PSF	HC-ENG	JB/WPF
TOT.LD.	40.0 PSF	SEQN-	95366
DUR.FAC.	1.25		
SPACING	24.0"	JREF-	1UM4487_Z03

Top chord 2x4 SP #1
Bot chord 2x4 SP #1
Webs 2x4 SP #3

H = recommended connection based on manufacturer tested capacities and calculations. Conditions may exist that require different connections than indicated. Refer to manufacturer publication for additional information.

These support conditions used at bearings indicated
(H1) = Simpson HUS26 w/ (2)2x6 SP M-26 supporting member.
(14) 0.148"x3" nails into supporting member,
(4) 0.148"x3" nails into supported member.

Bottom chord checked for 10.00 psf non-concurrent live load.

MWFRS loads based on trusses located at least 7.50 ft. from roof edge.

120 mph wind, 15.00 ft mean hgt, ASCE 7-10, CLOSED bldg, not located within 9.00 ft from roof edge, RISK CAT II, EXP C, wind TC DL=5.0 psf, wind BC DL=5.0 psf. GCpi(+/-)=0.18

Wind loads and reactions based on MWFRS with additional C&C member design.

Right end vertical not exposed to wind pressure.

(a) Continuous lateral bracing equally spaced on member.

In lieu of structural panels use purlins to brace all flat TC @ 24" OC.

Deflection meets L/240 live and L/180 total load. Creep increase factor for dead load is 1.50.

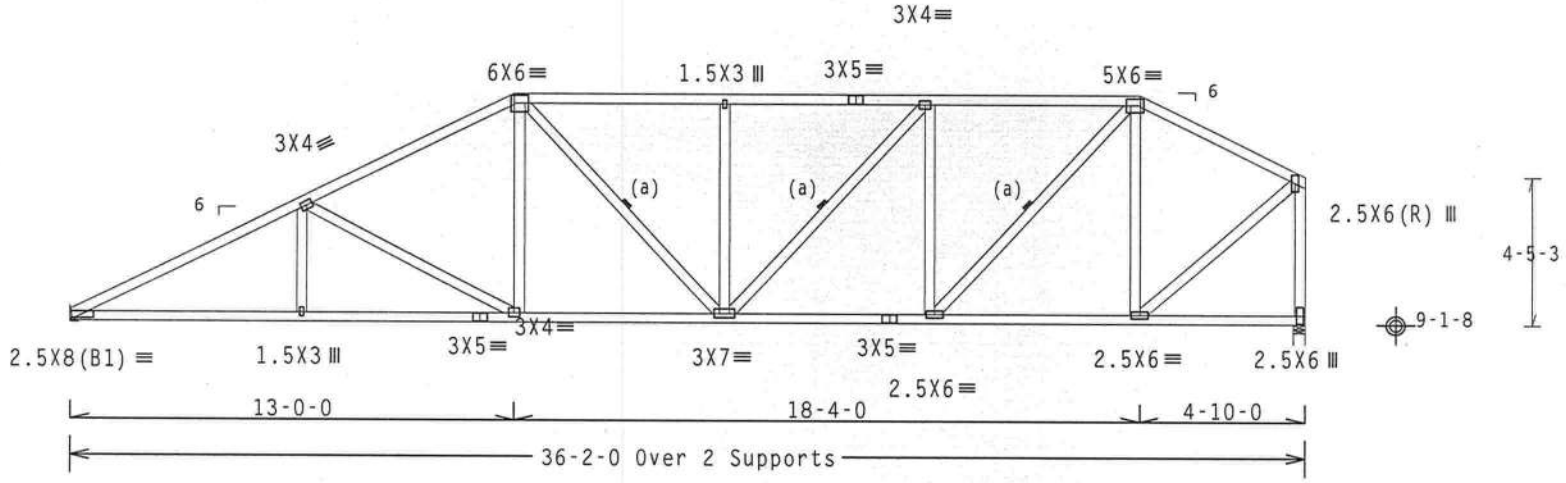

R=1495 U=163
RL=120/-80 H=Simpson HUS26
Supported Member Face: (4) 0.148"x3" nails
Supporting Member Face: (14) 0.148"x3" nails
Supporting Member : (2) 2x6 SP #2

R=1484 U=179 W=4"

PLT TYP. Wave

Design Crit: FBC2010Res/TPI-2007(STD)
FT/RT=20%(0%)/0(0)

10/03/12 QTY: 1

FL/-/4/-/-/R/-

Scale =.1875"/Ft.

ALPINE
ITW Building Components Group Inc.
Haines City, FL 33844
FL COA #0 278

WARNING READ AND FOLLOW ALL NOTES ON THIS SHEET!
IMPORTANT FURNISH THIS DESIGN TO ALL CONTRACTORS INCLUDING INSTALLERS.

Trusses require extreme care in fabricating, handling, shipping, installing and bracing. Refer to and follow the latest edition of BCSI (Building Component Safety Information, by TPI and WTCA) for safety practices prior to performing these functions. Installers shall provide temporary bracing per BCSI. Unless noted otherwise, top chord shall have properly attached structural sheathing and bottom chord shall have a properly attached rigid ceiling. Locations shown for permanent lateral restraint of webs shall have bracing installed per BCSI sections B3, B7 or B10, as applicable.

ITW Building Components Group Inc. (ITWBCG) shall not be responsible for any deviation from this design, any failure to build the truss in conformance with ANSI/TPI 1, or for handling, shipping, installation and bracing of trusses. Apply plates to each face of truss and position as shown above and on the Joint Details, unless noted otherwise. Refer to drawings 160A-Z for standard plate positions. A seal on this drawing or cover page listing this drawing, indicates acceptance of professional engineering responsibility solely for the design shown. The suitability and use of this design for any structure is the responsibility of the Building Designer per ANSI/TPI 1 Sec.2. For more information see: This job's general notes page; ITW-BCG: www.itwbcg.com; TPI: www.tpinst.org; WTCA: www.sbcindustry.com; ICC: www.iccsafe.org

WALTER P. FINN LICENSE No. 22839 STATE OF FLORIDA PROFESSIONAL ENGINEER

05/16/2012

TC LL	20.0 PSF	REF R487-- 81720
TC DL	10.0 PSF	DATE 05/16/12
BC DL	10.0 PSF	DRW HCUSR487 12137008
BC LL	0.0 PSF	HC-ENG JB/WPF
TOT.LD.	40.0 PSF	SEQN- 95377
DUR.FAC.	1.25	
SPACING	24.0"	JREF- 1UM4487_Z03

Top chord 2x4 SP #1
Bot chord 2x4 SP #1
Webs 2x4 SP #3

H = recommended connection based on manufacturer tested capacities and calculations. Conditions may exist that require different connections than indicated. Refer to manufacturer publication for additional information.

These support conditions used at bearings indicated
(H1) = Simpson HUS26 w/ (2)2x6 SP M-26 supporting member.
(14) 0.148"x3" nails into supporting member,
(4) 0.148"x3" nails into supported member.

Bottom chord checked for 10.00 psf non-concurrent live load.

MWFRS loads based on trusses located at least 15.00 ft. from roof edge.

120 mph wind, 15.00 ft mean hgt, ASCE 7-10, CLOSED bldg, not located within 9.00 ft from roof edge, RISK CAT II, EXP C, wind TC DL=5.0 psf, wind BC DL=5.0 psf. GCpi(+/-)=0.18

Wind loads and reactions based on MWFRS with additional C&C member design.

Right end vertical not exposed to wind pressure.

(a) Continuous lateral bracing equally spaced on member.

In lieu of structural panels use purlins to brace all flat TC @ 24" OC.

Deflection meets L/240 live and L/180 total load. Creep increase factor for dead load is 1.50.

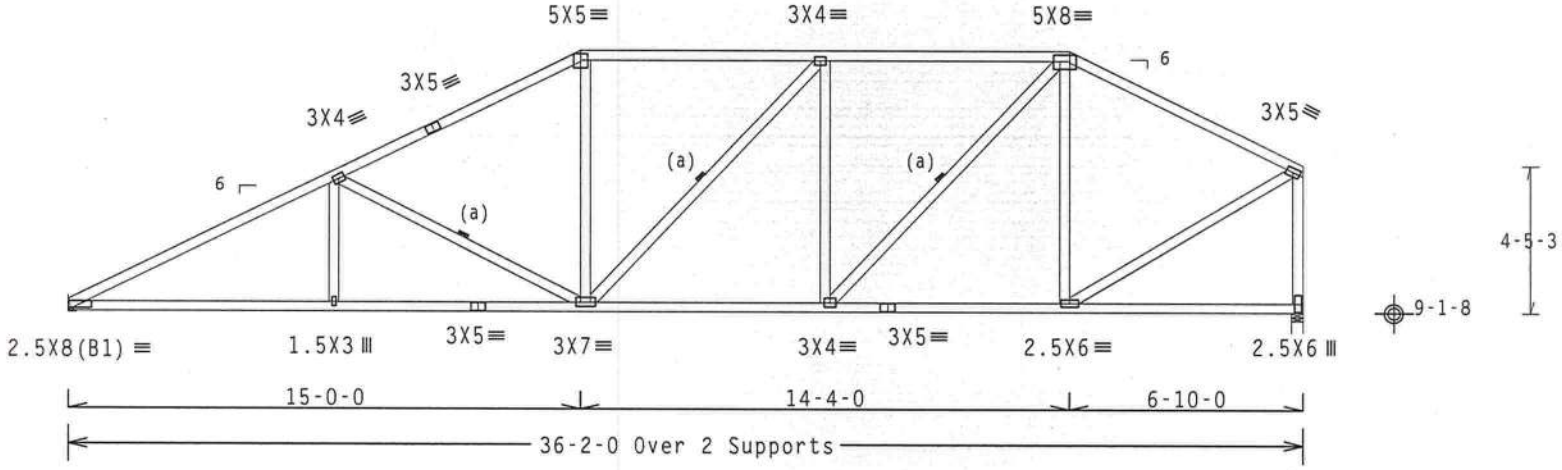

R=1495 U=32
RL=143/-103 H=Simpson HUS26
Supported Member Face: (4) 0.148"x3" nails
Supporting Member Face: (14) 0.148"x3" nails
Supporting Member : (2) 2x6 SP #2

R=1484 U=31 W=4"

Design Crit: FBC2010Res/TPI-2007(STD
FT/RT=20%(0%)/0(0)

PLT TYP. Wave | 10.03.11.0200.00 | QTY 1 | FL/-/4/-/-/R/- | Scale =.1875"/Ft.

ALPINE
ITW Building Components Group Inc.
Haines City, FL 33844
FL COA #0 278

WARNING READ AND FOLLOW ALL NOTES ON THIS SHEET!
IMPORTANT FURNISH THIS DESIGN TO ALL CONTRACTORS INCLUDING INSTALLERS.

Trusses require extreme care in fabricating, handling, shipping, installing and bracing. Refer to and follow the latest edition of BCSI (Building Component Safety Information, by TPI and WTCA) for safety practices prior to performing these functions. Installers shall provide temporary bracing per BCSI. Unless noted otherwise, top chord shall have properly attached structural sheathing and bottom chord shall have a properly attached rigid ceiling. Locations shown for permanent lateral restraint of webs shall have bracing installed per BCSI sections B3, B7 or B10, as applicable.

ITW Building Components Group Inc. (ITWBCG) shall not be responsible for any deviation from this design, any failure to build the truss in conformance with ANSI/TPI 1, or for handling, shipping, installing and bracing of trusses. Apply plates to each face of truss and position as shown above and on the Joint Details, unless noted otherwise. Refer to drawings 160A-Z for standard plate positions. A seal on this drawing or cover page listing this drawing, indicates acceptance of professional engineering responsibility solely for the design shown. The suitability and use of this design for any structure is the responsibility of the Building Designer per ANSI/TPI 1 Sec.2. For more information see: This job's general notes page; ITW-BCG: www.itwbcg.com; TPI: www.tpinst.org; WTCA: www.sbcindustry.com; ICC: www.iccsafe.org

WALTER P. FINN LICENSE No.22839 STATE OF FLORIDA PROFESSIONAL ENGINEER
05/16/2012

TC LL	20.0 PSF	REF	R487-- 81721
TC DL	10.0 PSF	DATE	05/16/12
BC DL	10.0 PSF	DRW	HCUSR487 12137009
BC LL	0.0 PSF	HC-ENG	JB/WPF
TOT.LD.	40.0 PSF	SEQN-	95382
DUR.FAC.	1.25		
SPACING	24.0"	JREF-	1UM4487_Z03

(12-089--BRYAN ZECHER Garrison Res. -- , ** - HS17A 36'2" Flat)

THIS DWG PREPARED FROM COMPUTER INPUT (LOADS & DIMENSIONS) SUBMITTED BY TRUSS MFR.

Top chord 2x4 SP #1
Bot chord 2x4 SP #1
Webs 2x4 SP #3

(a) Continuous lateral bracing equally spaced on member.

In lieu of structural panels use purlins to brace all flat TC @ 24" OC.

Bottom chord checked for 10.00 psf non-concurrent live load.

MWFRS loads based on trusses located at least 15.00 ft. from roof edge.

120 mph wind, 15.00 ft mean hgt, ASCE 7-10, CLOSED bldg, not located within 9.00 ft from roof edge, RISK CAT II, EXP C, wind TC DL=5.0 psf, wind BC DL=5.0 psf. GCpi(+/-)=0.18

Wind loads and reactions based on MWFRS with additional C&C member design.

Right end vertical not exposed to wind pressure.

Deflection meets L/240 live and L/180 total load. Creep increase factor for dead load is 1.50.

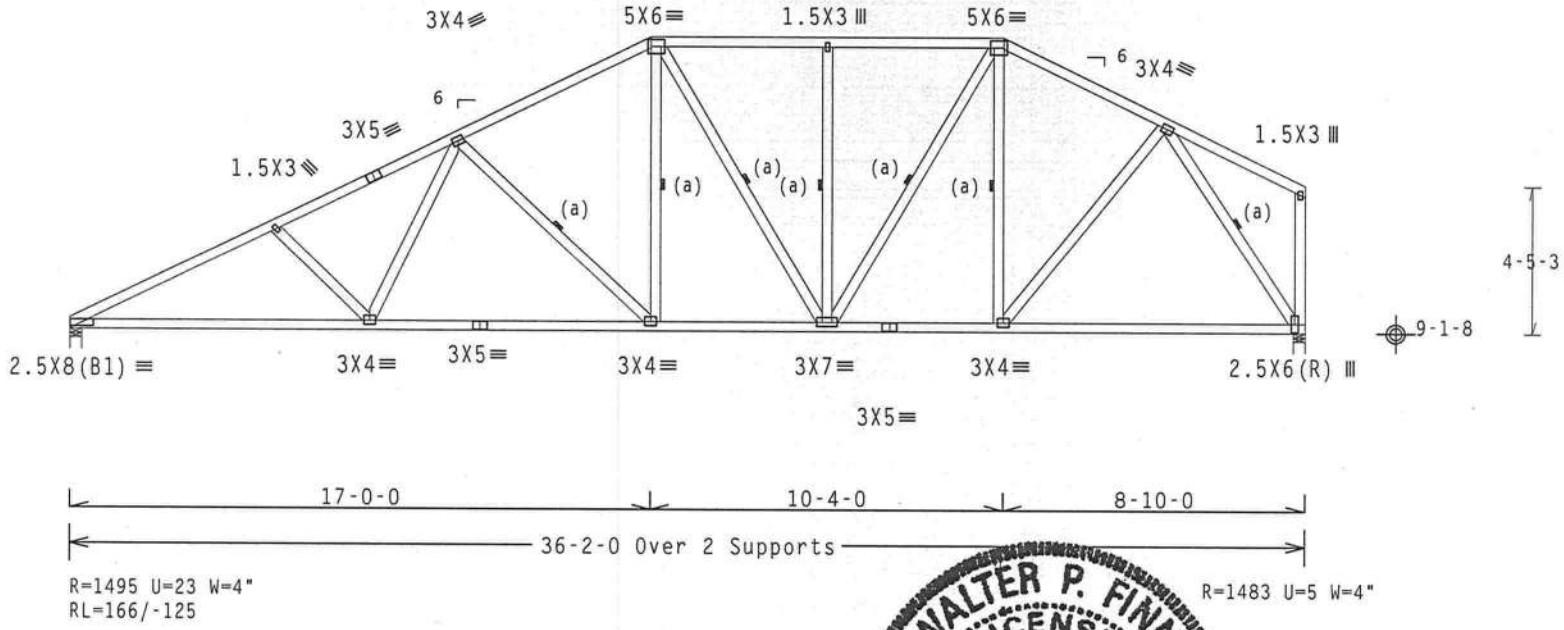

Design Crit: FBC2010Res/TPI-2007(STD)
FT/RT=20%(0%)/0(0)

PLT TYP. Wave

10/03.1 QTY:

FL/-/4/-/-/R/-

Scale =.1875"/Ft.

ALPINE
ITW Building Components Group Inc.
Haines City, FL 33844
FL COA #0 278

WARNING READ AND FOLLOW ALL NOTES ON THIS SHEET!
IMPORTANT FURNISH THIS DESIGN TO ALL CONTRACTORS INCLUDING INSTALLERS.

Trusses require extreme care in fabricating, handling, shipping, installing and bracing. Refer to and follow the latest edition of BCSI (Building Component Safety Information, by TPI and WTCA) for safety practices prior to performing these functions. Installers shall provide temporary bracing per BCSI. Unless noted otherwise, top chord shall have properly attached structural sheathing and bottom chord shall have a properly attached rigid ceiling. Locations shown for permanent lateral restraint of webs shall have bracing installed per BCSI sections B3, B7 or B10, as applicable.

ITW Building Components Group Inc. (ITWBCG) shall not be responsible for any deviation from this design, any failure to build the truss in conformance with ANSI/TPI 1, or for handling, shipping, installation and bracing of trusses. Apply plates to each face of truss and position as shown above and on the Joint Details, unless noted otherwise. Refer to drawings 160A-Z for standard plate positions. A seal on this drawing or cover page listing this drawing, indicates acceptance of professional engineering responsibility solely for the design shown. The suitability and use of this design for any structure is the responsibility of the Building Designer per ANSI/TPI 1 Sec.2. For more information see: This job's general notes page; ITW-BCG: www.itwbcg.com; TPI: www.tpinst.org; WTCA: www.sbcindustry.com; ICC: www.iccsafe.org

WALTER P. FINN
LICENSE
No.22839
STATE OF FLORIDA
PROFESSIONAL ENGINEER

05/16/2012

TC LL	20.0 PSF	REF R487-- 81722
TC DL	10.0 PSF	DATE 05/16/12
BC DL	10.0 PSF	DRW HCUSR487 12137010
BC LL	0.0 PSF	HC-ENG JB/WPF
TOT.LD.	40.0 PSF	SEQN- 95396
DUR.FAC.	1.25	
SPACING	24.0"	JREF- 1UM4487_Z03

(12-089--BRYAN ZECHER Garrison Res. -- , ** - HS19A 36'2" Flat)

THIS DWG PREPARED FROM COMPUTER INPUT (LOADS & DIMENSIONS) SUBMITTED BY TRUSS MFR.

Top chord 2x4 SP #1
Bot chord 2x4 SP #1
Webs 2x4 SP #3

Roof overhang supports 2.00 psf soffit load.

(a) Continuous lateral bracing equally spaced on member.

In lieu of structural panels use purlins to brace all flat TC @ 24" OC.

Deflection meets L/240 live and L/180 total load. Creep increase factor for dead load is 1.50.

120 mph wind, 15.00 ft mean hgt, ASCE 7-10, CLOSED bldg, not located within 9.00 ft from roof edge, RISK CAT II, EXP C, wind TC DL=5.0 psf, wind BC DL=5.0 psf. GCpi(+/-)=0.18

Wind loads and reactions based on MWFRS with additional C&C member design.

Right end vertical not exposed to wind pressure.

Bottom chord checked for 10.00 psf non-concurrent live load.

MWFRS loads based on trusses located at least 15.00 ft. from roof edge.

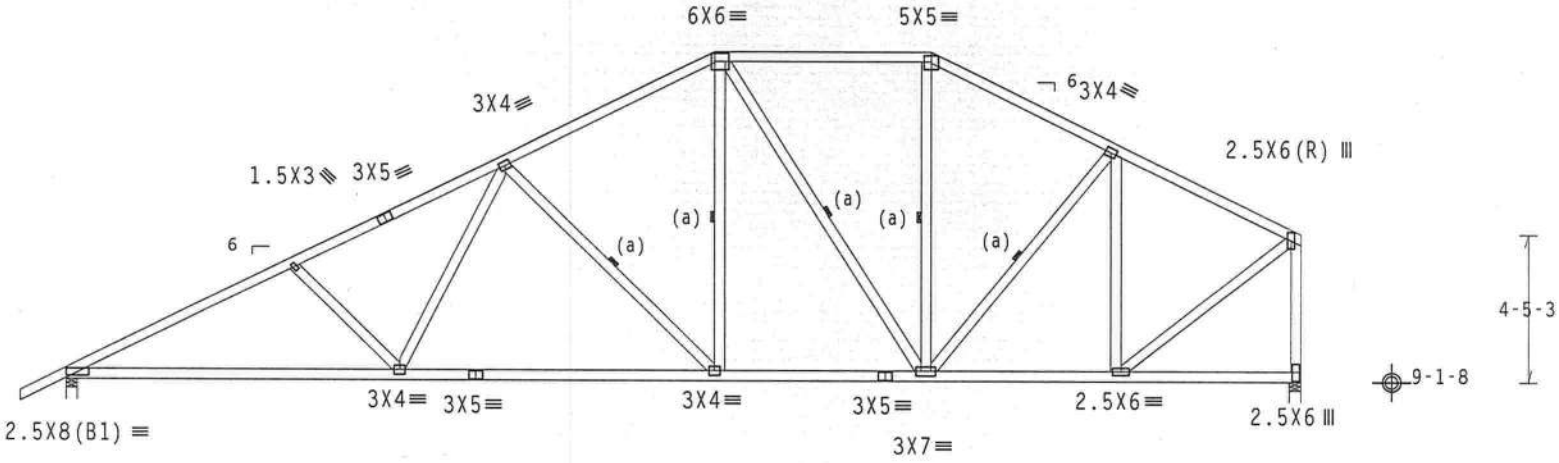

1-4-0

19-0-0 | 6-4-0 | 10-10-0

36-2-0 Over 2 Supports

R=1587 U=14 W=4"
RL=199/-167

R=1481 U=0 W=4"

PLT TYP. Wave

Design Crit: FBC2010Res/TPI-2007(STD) 10.03 11.0209 20 QTY:1 FL/-/4/-/-/R/-
FT/RT=20%(0%)/0(0)

Scale =.1875"/Ft.

ALPINE
ITW Building Components Group Inc.
Haines City, FL 33844
FL COA #0 278

WARNING READ AND FOLLOW ALL NOTES ON THIS SHEET!
IMPORTANT FURNISH THIS DESIGN TO ALL CONTRACTORS INCLUDING INSTALLERS.

Trusses require extreme care in fabricating, handling, shipping, installing and bracing. Refer to and follow the latest edition of BCSI (Building Component Safety Information, by TPI and WTCA) for recommended practices prior to performing these functions. Installers shall provide temporary bracing per BCSI. Unless noted otherwise, top chord shall have properly attached structural sheathing and bottom chord shall have a properly attached rigid ceiling. Locations shown for permanent lateral restraint of webs shall have bracing installed per BCSI sections B3, B7 or B10, as applicable.

ITW Building Components Group Inc. (ITWBCG) shall not be responsible for any deviation from this design, any failure to build the truss in conformance with ANSI/TPI 1, or for handling, shipping, installing and bracing of trusses. Apply plates to each face of truss and position as shown above and on the Joint Details, unless noted otherwise. Refer to drawings 160A-Z for standard plate positions. A seal on this drawing or cover page listing this drawing, indicates acceptance of professional engineering responsibility solely for the design shown. The suitability and use of this design for any structure is the responsibility of the Building Designer per ANSI/TPI 1 Sec.2. For more information see: This job's general notes page; ITW-BCG: www.itwbcg.com; TPI: www.tpinst.org; WTCA: www.sbcindustry.com; ICC: www.iccsafe.org

WALTER P. FINN LICENSE No.22839 STATE OF FLORIDA PROFESSIONAL ENGINEER
05/16/2012

TC LL	20.0 PSF	REF	R487-- 81723
TC DL	10.0 PSF	DATE	05/16/12
BC DL	10.0 PSF	DRW	HCUSR487 12137011
BC LL	0.0 PSF	HC-ENG	JB/WPF
TOT.LD.	40.0 PSF	SEQN-	95420
DUR.FAC.	1.25		
SPACING	24.0"	JREF-	1UM4487_Z03

(12-089--BRYAN ZECHER Garrison Res. -- , ** - HS9A 33'2" Flat)

Top chord 2x4 SP #1
Bot chord 2x4 SP #1
Webs 2x4 SP #3

H = recommended connection based on manufacturer tested capacities and calculations. Conditions may exist that require different connections than indicated. Refer to manufacturer publication for additional information.

These support conditions used at bearings indicated
(H1) = Simpson LUS26 w/ (2)2x6 SP M-26 supporting member.
(4) SD9212, 0.131"x2.5" into supporting member,
(4) SD9212, 0.131"x2.5" into supported member.

Deflection meets L/240 live and L/180 total load. Creep increase factor for dead load is 1.50.

120 mph wind, 15.00 ft mean hgt, ASCE 7-10, CLOSED bldg, not located within 9.00 ft from roof edge, RISK CAT II, EXP C, wind TC DL=5.0 psf, wind BC DL=5.0 psf. GCpi(+/-)=0.18

Wind loads and reactions based on MWFRS with additional C&C member design.

Right end vertical not exposed to wind pressure.

In lieu of structural panels use purlins to brace all flat TC @ 24" OC.

Bottom chord checked for 10.00 psf non-concurrent live load.

MWFRS loads based on trusses located at least 7.50 ft. from roof edge.

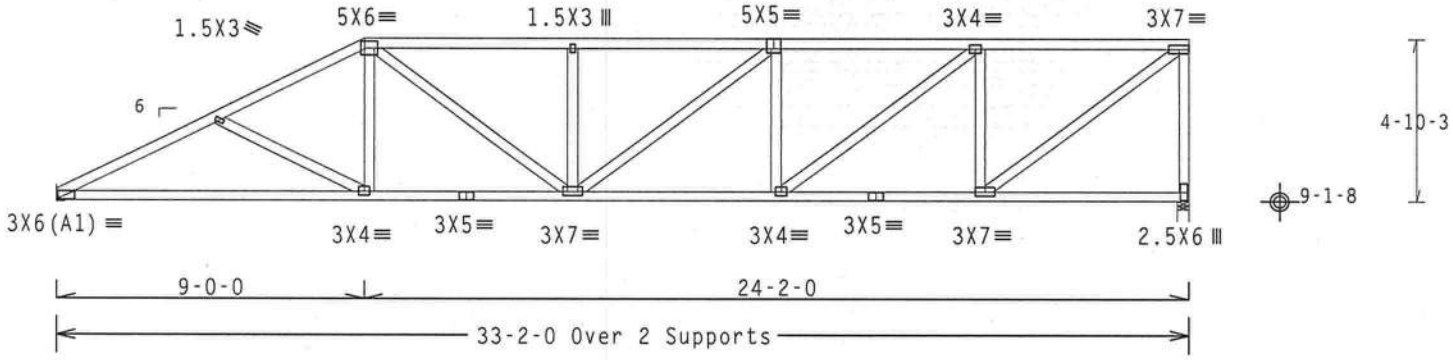

R=1371 U=150
RL=109/-26 H=Simpson LUS26
Supported Member Face: (4)
Supporting Member Face: (4)
Supporting Member : (2) 2x6 SP #1 Dense

U=174 W=4"

Design Crit: FBC2010Res/TPI-2007(STD)
FT/RT=20%(0%)/0(0)

PLT TYP. Wave

10.03.0 QTY: FL/-/4/-/-/R/- Scale =.1875"/Ft.

ALPINE
ITW Building Components Group Inc.
Haines City, FL 33844
FL COA #0 278

WARNING READ AND FOLLOW ALL NOTES ON THIS SHEET!
IMPORTANT FURNISH THIS DESIGN TO ALL CONTRACTORS INCLUDING INSTALLERS.

Trusses require extreme care in fabricating, handling, shipping, installing and bracing. Refer to and follow the latest edition of BCSI (Building Component Safety Information, by TPI and WTCA) for safety practices prior to performing these functions. Installers shall provide temporary bracing per BCSI. Unless noted otherwise, top chord shall have properly attached structural sheathing and bottom chord shall have a properly attached rigid ceiling. Locations shown for permanent lateral restraint of webs shall have bracing installed per BCSI sections B3, B7 or B10, as applicable.

ITW Building Components Group Inc. (ITWBCG) shall not be responsible for any deviation from this drawing, any failure to build the truss in conformance with ANSI/TPI 1, or for handling, shipping, installation and bracing of trusses. Apply plates to each face of truss and position as shown above and on the Joint Details, unless noted otherwise. Refer to drawings 160A-Z for standard plate positions. A seal on this drawing or cover page listing this drawing, indicates acceptance of professional engineering responsibility solely for the design shown. The suitability and use of this design for any structure is the responsibility of the Building Designer per ANSI/TPI 1 Sec.2. For more information see: This job's general notes page; ITW-BCG: www.itwbcg.com; TPI: www.tpinst.org; WTCA: www.sbcindustry.com; ICC: www.iccsafe.org

WALTER P. FINN LICENSE No.22839 STATE OF FLORIDA PROFESSIONAL ENGINEER
05/16/2012

TC LL	20.0 PSF	REF R487-- 81724
TC DL	10.0 PSF	DATE 05/16/12
BC DL	10.0 PSF	DRW HCUSR487 12137012
BC LL	0.0 PSF	HC-ENG JB/WPF
TOT.LD.	40.0 PSF	SEQN- 95328
DUR.FAC.	1.25	
SPACING	24.0"	JREF- 1UM4487_Z03

(12-089--BRYAN ZECHER Garrison Res. -- , ** - AT 32'4"8 Common)

THIS DWG PREPARED FROM COMPUTER INPUT (LOADS & DIMENSIONS) SUBMITTED BY TRUSS MFR.

Top chord 2x4 SP #1
Bot chord 2x4 SP #1
Webs 2x4 SP #3 :W3 2x6 SP #2: :W14 2x4 SP #1:
:Rt Bearing Leg 2x4 SP #3:

Left end vertical not exposed to wind pressure.

H = recommended connection based on manufacturer tested capacities and calculations. Conditions may exist that require different connections than indicated. Refer to manufacturer publication for additional information.

(a) Continuous lateral bracing equally spaced on member.

Bottom chord checked for 10.00 psf non-concurrent live load.

MWFRS loads based on trusses located at least 16.22 ft. from roof edge.

120 mph wind, 16.22 ft mean hgt, ASCE 7-10, CLOSED bldg, not located within 9.00 ft from roof edge, RISK CAT II, EXP C, wind TC DL=5.0 psf, wind BC DL=5.0 psf, GCpi(+/-)=0.18

Wind loads and reactions based on MWFRS with additional C&C member design.

These support conditions used at bearings indicated
(H1) = Simpson HUS26 w/ (1)2x6 SP M-26 supporting member.
(14) 0.148"x3" nails into supporting member.
(4) 0.148"x3" nails into supported member.

Truss passed check for 20 psf additional bottom chord live load in areas with 42"-high x 24"-wide clearance.

Deflection meets L/240 live and L/180 total load. Creep increase factor for dead load is 1.50.

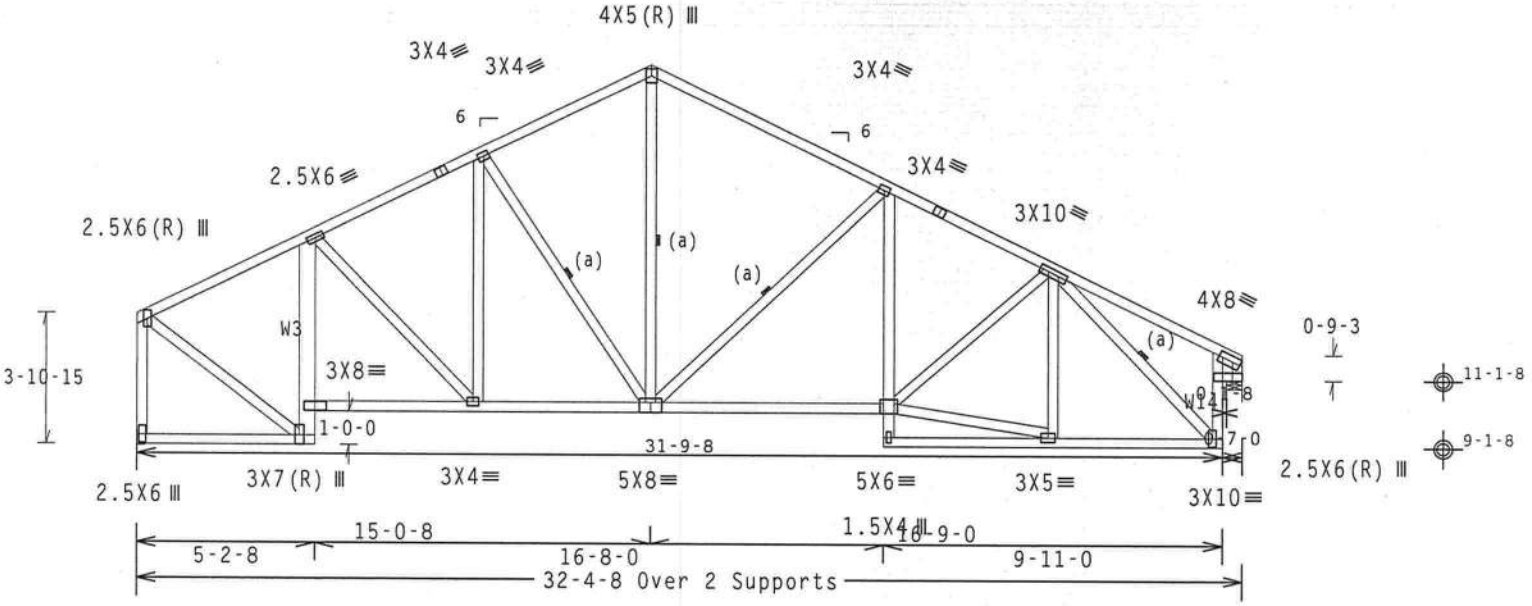

R=1416 U=0
RL=171/-184 H=Simpson HUS26
Supported Member Face: (4) 0.148"x3" nails
Supporting Member Face: (14) 0.148"x3" nails
Supporting Member : (1) 2x6 SP #2

R=1416 U=0 W=5.5"

Design Crit: FBC2010Res/TPI-2007(STD)

PLT TYP. Wave

FT/RT=20%(0%)/0(0)

10.03.

QTY:

FL/-/4/-/-/R/-

Scale =.1875"/Ft.

ALPINE
ITW Building Components Group Inc.
Haines City, FL 33844
FL COA #0 278

WARNING READ AND FOLLOW ALL NOTES ON THIS SHEET!
IMPORTANT FURNISH THIS DESIGN TO ALL CONTRACTORS INCLUDING INSTALLERS.

Trusses require extreme care in fabricating, handling, shipping, installing and bracing. Refer to and follow the latest edition of BCSI (Building Component Safety Information, by TPI and WTCA) for safety practices prior to performing these functions. Installers shall provide temporary bracing per BCSI. Unless noted otherwise, top chord shall have properly attached structural sheathing and bottom chord shall have a properly attached rigid ceiling. Locations shown for permanent lateral restraint of webs shall have bracing installed per BCSI sections B3, B7 or B10, as applicable.

ITW Building Components Group Inc. (ITWBCG) shall not be responsible for any deviation from this design, any failure to build the truss in conformance with ANSI/TPI 1, or for handling, shipping, installation and bracing of trusses. Apply plates to each face of truss and position as shown above and on the Joint Details, unless noted otherwise. Refer to drawings 160A-Z for standard plate positions. A seal on this drawing or cover page listing this drawing, indicates acceptance of professional engineering responsibility solely for the design shown. The suitability and use of this design for any structure is the responsibility of the Building Designer per ANSI/TPI 1 Sec.2. For more information see: This job's general notes page; ITW-BCG: www.itwbcg.com; TPI: www.tpinst.org; WTCA: www.sbcindustry.com; ICC: www.iccsafe.org

WALTER P. FINN
LICENSE
No. 22839
STATE OF FLORIDA
PROFESSIONAL ENGINEER

05/16/2012

TC LL	20.0 PSF	REF R487-- 81725
TC DL	10.0 PSF	DATE 05/16/12
BC DL	10.0 PSF	DRW HCUSR487 12137013
BC LL	0.0 PSF	HC-ENG JB/WPF
TOT.LD.	40.0 PSF	SEQN- 95919
DUR.FAC.	1.25	
SPACING	24.0"	JREF- 1UM4487_Z03

(12-089--BRYAN ZECHER Garrison Res. -- , ** - H11AT 44'4" Stepdown Hip Girder)

THIS DWG PREPARED FROM COMPUTER INPUT (LOADS & DIMENSIONS) SUBMITTED BY TRUSS MFR.

Top chord 2x4 SP #1 :T3, T4 2x4 SP M-30:
Bot chord 2x4 SP #1 :B2 2x4 SP M-30: :B5 2x6 SP SS:
Webs 2x4 SP #3 :W12, W20 2x4 SP #1:
:W22 2x6 SP #2:

Special loads
------(Lumber Dur.Fac.=1.25 / Plate Dur.Fac.=1.25)

TC- From	62 plf at	-1.33 to	62 plf at	3.84
TC- From	62 plf at	3.84 to	62 plf at	11.00
TC- From	62 plf at	11.00 to	62 plf at	23.00
TC- From	62 plf at	23.00 to	62 plf at	33.33
TC- From	62 plf at	33.33 to	62 plf at	45.67
BC- From	4 plf at	-1.33 to	4 plf at	0.00
BC- From	20 plf at	0.00 to	20 plf at	2.67
BC- From	20 plf at	2.67 to	20 plf at	8.00
BC- From	20 plf at	8.00 to	20 plf at	16.00
BC- From	20 plf at	16.00 to	20 plf at	30.33
BC- From	20 plf at	30.33 to	20 plf at	44.33
BC- From	4 plf at	44.33 to	4 plf at	45.67
BC- 4388.16 lb Conc. Load at 38.27				

Roof overhang supports 2.00 psf soffit load.

Calculated horizontal deflection is 0.11" due to live load and 0.17" due to dead load.

Bottom chord checked for 10.00 psf non-concurrent live load.

2 COMPLETE TRUSSES REQUIRED

Nail Schedule:0.131"x3", min. nails
Top Chord: 1 Row @12.00" o.c.
Bot Chord: 1 Row @12.00" o.c.
Webs : 1 Row @ 4" o.c.
Use equal spacing between rows and stagger nails in each row to avoid splitting.
4" o.c. spacing of nails perpendicular and parallel to grain required in area over bearings greater than 4"

(++) - This plate works for both joints covered.

(**) 1 plate(s) require special positioning. Refer to scaled plate plot details for special positioning requirements.

120 mph wind, 15.00 ft mean hgt, ASCE 7-10, CLOSED bldg, not located within 9.00 ft from roof edge, RISK CAT II, EXP C, wind TC DL=5.0 psf, wind BC DL=5.0 psf. GCpi(+/-)=0.18

Wind loads and reactions based on MWFRS with additional C&C member design.

In lieu of structural panels use purlins to brace all flat TC @ 24" OC.

Deflection meets L/240 live and L/180 total load. Creep increase factor for dead load is 1.50.

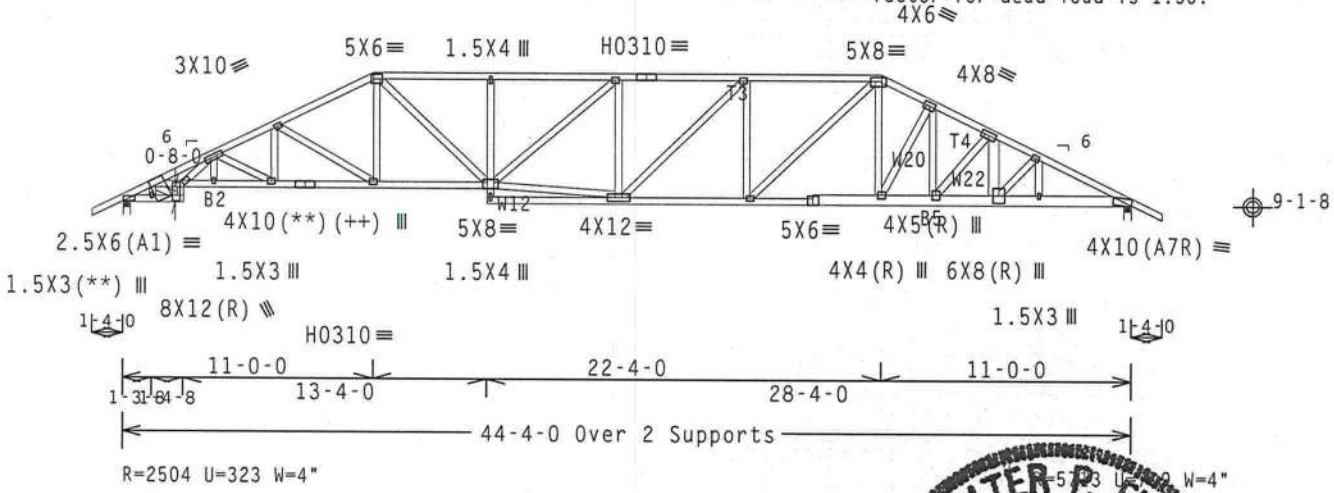

Note: All Plates Are 3X4 Except As Shown.

Design Crit: FBC2010Res/TPI-2007(STD)

PLT TYP. 20 Gauge HS,Wave FT/RT=20%(0%)/0(0) 10.03.11.0209.20 QTY:1 FL/-/4/-/-/R/- Scale =.125"/Ft.

ALPINE
ITW Building Components Group Inc.
Haines City, FL 33844
FL COA #0 278

WARNING READ AND FOLLOW ALL NOTES ON THIS SHEET!
IMPORTANT FURNISH THIS DESIGN TO ALL CONTRACTORS INCLUDING INSTALLERS.

Trusses require extreme care in fabricating, handling, shipping, installing and bracing. Refer to and follow the latest edition of BCSI (Building Component Safety Information, by TPI and WTCA) for standard practices prior to performing these functions. Installers shall provide temporary bracing per BCSI. Unless noted otherwise, top chord shall have properly attached structural sheathing and bottom chord shall have a properly attached rigid ceiling. Locations shown for permanent lateral restraint of webs shall have bracing installed per BCSI sections B3, B7 or B10, as applicable.

ITW Building Components Group Inc. (ITWBCG) shall not be responsible for any deviation from this design, any failure to build the truss in conformance with ANSI/TPI 1, or for handling, shipping, installing and bracing of trusses. Apply plates to each face of truss and position as shown above and on the Joint Details, unless noted otherwise. Refer to drawings 160A-Z for standard plate positions. A seal on this drawing or cover page listing this drawing, indicates acceptance of professional engineering responsibility solely for the design shown. The suitability and use of this design for any structure is the responsibility of the Building Designer per ANSI/TPI 1 Sec.2. For more information see: This job's general notes page; ITW-BCG: www.itwbcg.com; TPI: www.tpinst.org; WTCA: www.sbcindustry.com; ICC: www.iccsafe.org

WALTER P. FINN LICENSE No.22839 STATE OF FLORIDA PROFESSIONAL ENGINEER

05/16/2012

TC LL	20.0 PSF	REF	R487-- 81726
TC DL	10.0 PSF	DATE	05/16/12
BC DL	10.0 PSF	DRW	HCUSR487 12137043
BC LL	0.0 PSF	HC-ENG	JB/WPF
TOT.LD.	40.0 PSF	SEQN-	96108
DUR.FAC.	1.25		
SPACING	24.0"	JREF-	1UM4487_Z03

(12-089--BRYAN ZECHER Garrison Res. -- , ** - H7AT 38'2"8 Stepdown Hip Girder)

THIS DWG PREPARED FROM COMPUTER INPUT (LOADS & DIMENSIONS) SUBMITTED BY TRUSS MFR.

Top chord 2x4 SP M-30 :T3, T4 2x4 SP #1:
Bot chord 2x4 SP #1 :B2 2x6 SP SS: :B3 2x4 SP M-30:
Webs 2x4 SP #3 :W9, W10 2x4 SP #1:

(**) 3 plate(s) require special positioning. Refer to scaled plate plot details for special positioning requirements.

120 mph wind, 15.00 ft mean hgt, ASCE 7-10, CLOSED bldg, Located anywhere in roof, RISK CAT II, EXP C, wind TC DL=5.0 psf, wind BC DL=5.0 psf. GCpi(+/-)=0.18

Roof overhang supports 2.00 psf soffit load.

Calculated horizontal deflection is 0.13" due to live load and 0.21" due to dead load.

These support conditions used at bearings indicated
(H1) = Simpson HHUS28-2 w/ (1)2x8 SP #1 Dense supporting member.
(22) 0.148"x3" nails into supporting member,
(8) 0.148"x3" nails into supported member.

#1 hip supports 7-0-0 jacks with no webs.

Deflection meets L/240 live and L/180 total load. Creep increase factor for dead load is 1.50.

Calculated vertical deflection is 0.46" due to live load and 0.73" due to dead load at X = 16-1-12.

2 COMPLETE TRUSSES REQUIRED

Nail Schedule:0.131"x3", min. nails
Top Chord: 1 Row @12.00" o.c.
Bot Chord: 1 Row @12.00" o.c.
Webs : 1 Row @ 4" o.c.
Use equal spacing between rows and stagger nails in each row to avoid splitting.

Wind loads and reactions based on MWFRS with additional C&C member design.

Right end vertical not exposed to wind pressure.

H = recommended connection based on manufacturer tested capacities and calculations. Conditions may exist that require different connections than indicated. Refer to manufacturer publication for additional information.

In lieu of structural panels use purlins to brace all flat TC @ 24" OC.

Left side jacks have 7-0-0 setback with 0-0-0 cant and 1-4-0 overhang.
End jacks have 7-0-0 setback with 0-0-0 cant and 1-4-0 overhang.
Right side jacks have 0-0-0 setback with 0-0-0 cant and 0-0-0 overhang.

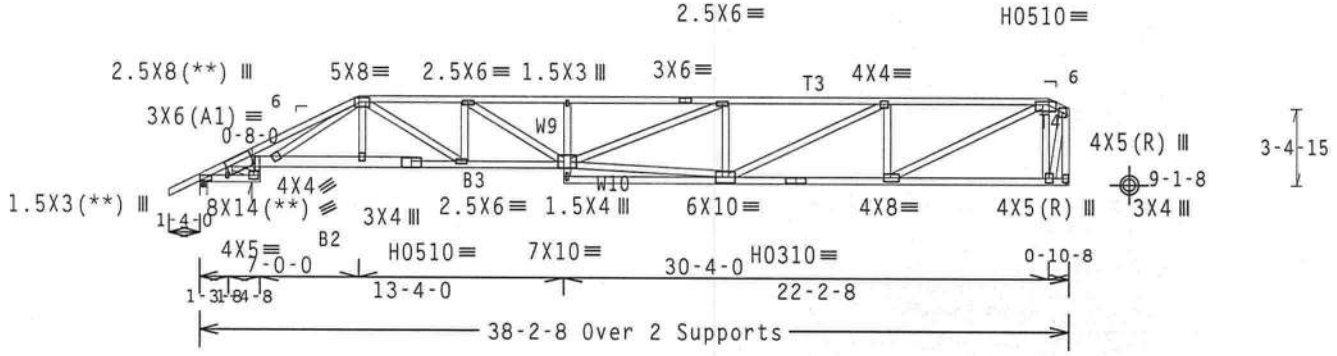

R=3267 U=361 W=4"

R=3364 U=251 W=Simpson HHUS28-2
Supporting Member Face: (8) 0.148"x3" nails
Supporting Member Face: (22) 0.148"x3" nails
Supported Member: 2x8 SP #1 Dense

Design Crit: FBC2010Res/TPI-2007(STD) 10.03 11.0209 20 QTY 1 FL/-/4/-/-/R/-

PLT TYP. 20 Gauge HS,Wave FT/RT=20%(0%)/0(0)

Scale =.125"/Ft.

ALPINE
ITW Building Components Group Inc.
Haines City, FL 33844
FL COA #0 278

WARNING READ AND FOLLOW ALL NOTES ON THIS SHEET!
IMPORTANT FURNISH THIS DESIGN TO ALL CONTRACTORS INCLUDING INSTALLERS.

Trusses require extreme care in fabricating, handling, shipping, installing and bracing. Refer to and follow the latest edition of BCSI (Building Component Safety Information, by TPI and WTCA) for safety practices prior to performing these functions. Installers shall provide temporary bracing per BCSI. Unless noted otherwise, top chord shall have properly attached structural sheathing and bottom chord shall have a properly attached rigid ceiling. Locations shown for permanent lateral restraint of webs shall have bracing installed per BCSI sections B3, B7 or B10, as applicable.

ITW Building Components Group Inc. (ITWBCG) shall not be responsible for any deviation from this design, any failure to build the truss in conformance with ANSI/TPI 1, or for handling, shipping, installing and bracing of trusses. Apply plates to each face of truss and position as shown above and on the Joint Details, unless noted otherwise. Refer to drawings 160A-Z for standard plate positions. A seal on this drawing or cover page listing this drawing, indicates acceptance of professional engineering responsibility solely for the design shown. The suitability and use of this design for any structure is the responsibility of the Building Designer per ANSI/TPI 1 Sec.2. For more information see: This job's general notes page; ITW-BCG: www.itwbcg.com; TPI: www.tpinst.org; WTCA: www.sbcindustry.com; ICC: www.iccsafe.org

WALTER P. FINN LICENSE No.22839 STATE OF FLORIDA PROFESSIONAL ENGINEER
05/16/2012

TC LL	20.0 PSF	REF	R487-- 81727
TC DL	10.0 PSF	DATE	05/16/12
BC DL	10.0 PSF	DRW	HCUSR487 12137044
BC LL	0.0 PSF	HC-ENG	JB/WPF
TOT.LD.	40.0 PSF	SEQN-	95552
DUR.FAC.	1.25		
SPACING	24.0"	JREF-	1UM4487_Z03

(12-089--BRYAN ZECHER Garrison Res. -- , ** - H9AT 38'2"8 Stepdown Hip)

THIS DWG PREPARED FROM COMPUTER INPUT (LOADS & DIMENSIONS) SUBMITTED BY TRUSS MFR.

Top chord 2x4 SP #1
Bot chord 2x4 SP #1 :B2 2x6 SP SS:
Webs 2x4 SP #3

Roof overhang supports 2.00 psf soffit load.

Calculated horizontal deflection is 0.11" due to live load and 0.18" due to dead load.

H = recommended connection based on manufacturer tested capacities and calculations. Conditions may exist that require different connections than indicated. Refer to manufacturer publication for additional information.

In lieu of structural panels use purlins to brace all flat TC @ 24" OC.

Bottom chord checked for 10.00 psf non-concurrent live load.

MWFRS loads based on trusses located at least 7.50 ft. from roof edge.

(**) 3 plate(s) require special positioning. Refer to scaled plate plot details for special positioning requirements.

120 mph wind, 15.00 ft mean hgt, ASCE 7-10, CLOSED bldg, not located within 9.00 ft from roof edge, RISK CAT II, EXP C, wind TC DL=5.0 psf, wind BC DL=5.0 psf. GCpi(+/-)=0.18

Wind loads and reactions based on MWFRS with additional C&C member design.

Right end vertical not exposed to wind pressure.

These support conditions used at bearings indicated
(H1) = Simpson LUS28 w/ (1)2x8 SP #1 Dense supporting member.
(6) SD9112, 0.131"x1.5" into supporting member,
(4) SD9212, 0.131"x2.5" into supported member.

Deflection meets L/240 live and L/180 total load. Creep increase factor for dead load is 1.50.

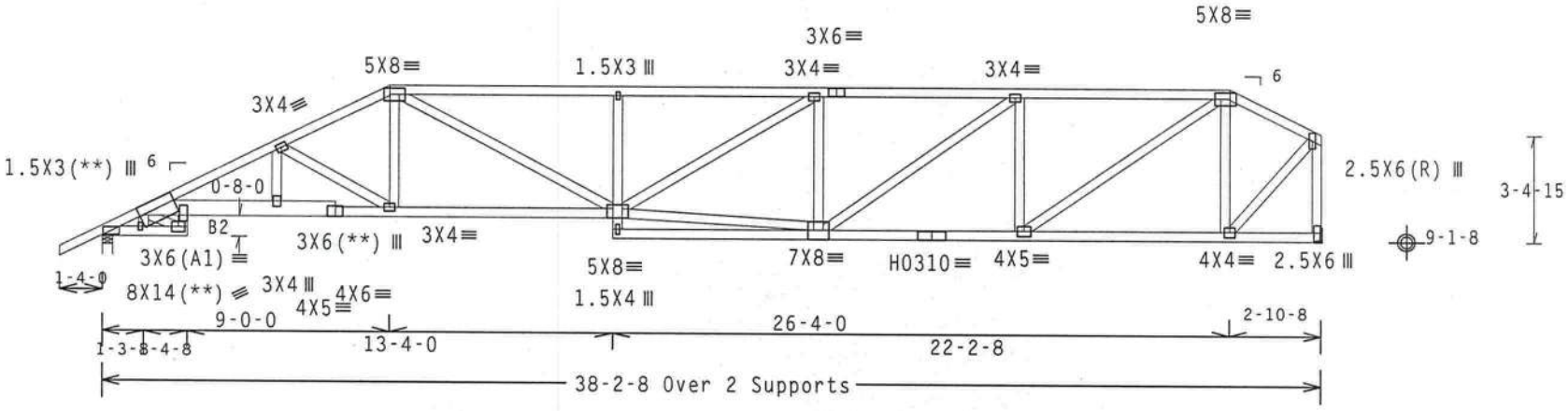

R=1566 U=190 H=Simpson LUS28
Supported Member Face: (4)
Supporting Member Face: (6)
Supporting Member : (1) 2x8 SP #1 Dense

R=1670 U=198 W=4"
RL=93/-71

PLT TYP. 20 Gauge HS,Wave

Design Crit: FBC2010Res/TPI-2007(STD) FT/RT=20%(0%)/0(0)

10.03.11.0209.20 QTY: 1 FL/-/4/-/-/R/- Scale =.1875"/Ft.

ALPINE
ITW Building Components Group Inc.
Haines City, FL 33844
FL COA #0 278

WARNING READ AND FOLLOW ALL NOTES ON THIS SHEET!
IMPORTANT FURNISH THIS DESIGN TO ALL CONTRACTORS INCLUDING INSTALLERS.

Trusses require extreme care in fabricating, handling, shipping, installing and bracing. Refer to and follow the latest edition of BCSI (Building Component Safety Information, by TPI and WTCA) for safety practices prior to performing these functions. Installers shall provide temporary bracing per BCSI. Unless noted otherwise, top chord shall have properly attached structural sheathing and bottom chord shall have a properly attached rigid ceiling. Locations shown for permanent lateral restraint of webs shall have bracing installed per BCSI sections B3, B7 or B10, as applicable.

ITW Building Components Group Inc. (ITWBCG) shall not be responsible for any deviation from this design, any failure to build the truss in conformance with ANSI/TPI 1, or for handling, shipping, installing and bracing of trusses. Apply plates to each face of truss and position as shown above and on the Joint Details, unless noted otherwise. Refer to drawings 160A-Z for standard plate positions. A seal on this drawing or cover page listing this drawing, indicates acceptance of professional engineering responsibility solely for the design shown. The suitability and use of this design for any structure is the responsibility of the Building Designer per ANSI/TPI 1 Sec.2. For more information see: This job's general notes page; ITW-BCG: www.itwbcg.com; TPI: www.tpinst.org; WTCA: www.sbcindustry.com; ICC: www.iccsafe.org

WALTER P. FINN LICENSE No.22839 STATE OF FLORIDA PROFESSIONAL ENGINEER
05/16/2012

TC LL	20.0 PSF	REF	R487-- 81728
TC DL	10.0 PSF	DATE	05/16/12
BC DL	10.0 PSF	DRW	HCUSR487 12137014
BC LL	0.0 PSF	HC-ENG	JB/WPF
TOT.LD.	40.0 PSF	SEQN-	95582
DUR.FAC.	1.25		
SPACING	24.0"	JREF-	1UM4487_Z03

Top chord 2x4 SP #1
Bot chord 2x4 SP #1
Webs 2x4 SP #3 :W3 2x6 SP #2:

Left end vertical not exposed to wind pressure.

Roof overhang supports 2.00 psf soffit load.

H = recommended connection based on manufacturer tested capacities and calculations. Conditions may exist that require different connections than indicated. Refer to manufacturer publication for additional information.

(a) Continuous lateral bracing equally spaced on member.

In lieu of structural panels use purlins to brace all flat TC @ 24" OC.

MWFRS loads based on trusses located at least 15.00 ft. from roof edge.

120 mph wind, 15.00 ft mean hgt, ASCE 7-10, CLOSED bldg, not located within 9.00 ft from roof edge, RISK CAT II, EXP C, wind TC DL=5.0 psf, wind BC DL=5.0 psf. GCpi(+/-)=0.18

Wind loads and reactions based on MWFRS with additional C&C member design.

Calculated horizontal deflection is 0.11" due to live load and 0.18" due to dead load.

These support conditions used at bearings indicated
(H1) = Simpson HUS26 w/ (1)2x6 SP M-26 supporting member.
(14) 0.148"x3" nails into supporting member,
(4) 0.148"x3" nails into supported member.

Bottom chord checked for 10.00 psf non-concurrent live load.

Deflection meets L/240 live and L/180 total load. Creep increase factor for dead load is 1.50.

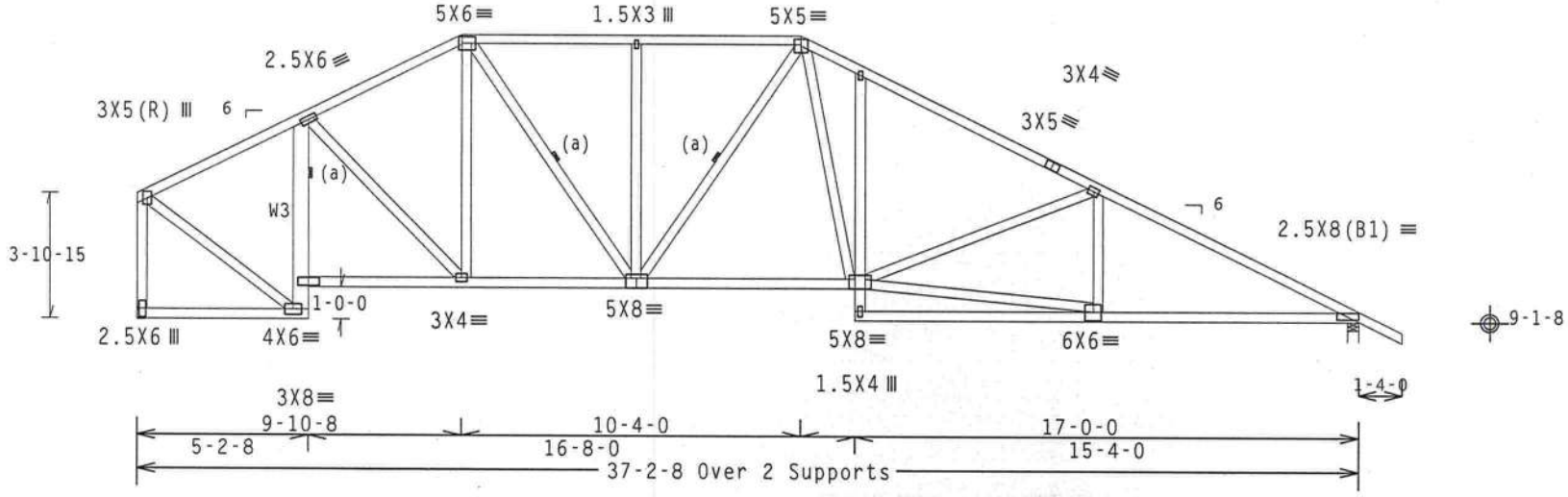

R=1524 U=0
RL=154/-181 H=Simpson HUS26
Supported Member Face: (4) 0.148"x3" nails
Supporting Member Face: (14) 0.148"x3" nails
Supporting Member : (1) 2x6 SP #2

R=1629 U=27 W=4"

Design Crit: FBC2010Res/TPI-2007(STD)
FT/RT=20%(0%)/0(0) 10/03.1 QTY: FL/-/4/-/-/R/- Scale =.1875"/Ft.

PLT TYP. Wave

WALTER P. FINN LICENSE No.22839 STATE OF FLORIDA PROFESSIONAL ENGINEER
05/16/2012

ALPINE
ITW Building Components Group Inc.
Haines City, FL 33844
FL COA #0 278

WARNING READ AND FOLLOW ALL NOTES ON THIS SHEET!
IMPORTANT FURNISH THIS DESIGN TO ALL CONTRACTORS INCLUDING INSTALLERS.

Trusses require extreme care in fabricating, handling, shipping, installing and bracing. Refer to and follow the latest edition of BCSI (Building Component Safety Information, by TPI and WTCA) for safety practices prior to performing these functions. Installers shall provide temporary bracing per BCSI. Unless noted otherwise, top chord shall have properly attached structural sheathing and bottom chord shall have a properly attached rigid ceiling. Locations shown for permanent lateral restraint of webs shall have bracing installed per BCSI sections B3, B7 or B10, as applicable.

ITW Building Components Group Inc. (ITWBCG) shall not be responsible for any deviation from this design, any failure to build the truss in conformance with ANSI/TPI 1, or for handling, shipping, installation and bracing of trusses. Apply plates to each face of truss and position as shown above and on the Joint Details, unless noted otherwise. Refer to drawings 160A-Z for standard plate positions. A seal on this drawing or cover page listing this drawing, indicates acceptance of professional engineering responsibility solely for the design shown. The suitability and use of this design for any structure is the responsibility of the Building Designer per ANSI/TPI 1 Sec.2. For more information see: This job's general notes page; ITW-BCG: www.itwbcg.com; TPI: www.tpinst.org; WTCA: www.sbcindustry.com; ICC: www.iccsafe.org

TC LL	20.0 PSF	REF R487-- 81729
TC DL	10.0 PSF	DATE 05/16/12
BC DL	10.0 PSF	DRW HCUSR487 12137015
BC LL	0.0 PSF	HC-ENG JB/WPF
TOT.LD.	40.0 PSF	SEQN- 95822
DUR.FAC.	1.25	
SPACING	24.0"	JREF- 1UM4487_Z03

(12-089--BRYAN ZECHER Garrison Res. -- , ** - HT19A 37'2"8 Common)

THIS DWG PREPARED FROM COMPUTER INPUT (LOADS & DIMENSIONS) SUBMITTED BY TRUSS MFR.

Top chord 2x4 SP #1
Bot chord 2x4 SP #1
Webs 2x4 SP #3 :W3 2x6 SP #2:

Left end vertical not exposed to wind pressure.

Roof overhang supports 2.00 psf soffit load.

H = recommended connection based on manufacturer tested capacities and calculations. Conditions may exist that require different connections than indicated. Refer to manufacturer publication for additional information.

(a) Continuous lateral bracing equally spaced on member.

In lieu of structural panels use purlins to brace all flat TC @ 24" OC.

MWFRS loads based on trusses located at least 15.00 ft. from roof edge.

120 mph wind, 15.00 ft mean hgt, ASCE 7-10, CLOSED bldg, not located within 9.00 ft from roof edge, RISK CAT II, EXP C, wind TC DL=5.0 psf, wind BC DL=5.0 psf. GCpi(+/-)=0.18

Wind loads and reactions based on MWFRS with additional C&C member design.

Calculated horizontal deflection is 0.12" due to live load and 0.18" due to dead load.

These support conditions used at bearings indicated
(H1) = Simpson HUS26 w/ (1)2x6 SP M-26 supporting member.
(14) 0.148"x3" nails into supporting member.
(4) 0.148"x3" nails into supported member.

Bottom chord checked for 10.00 psf non-concurrent live load.

Deflection meets L/240 live and L/180 total load. Creep increase factor for dead load is 1.50.

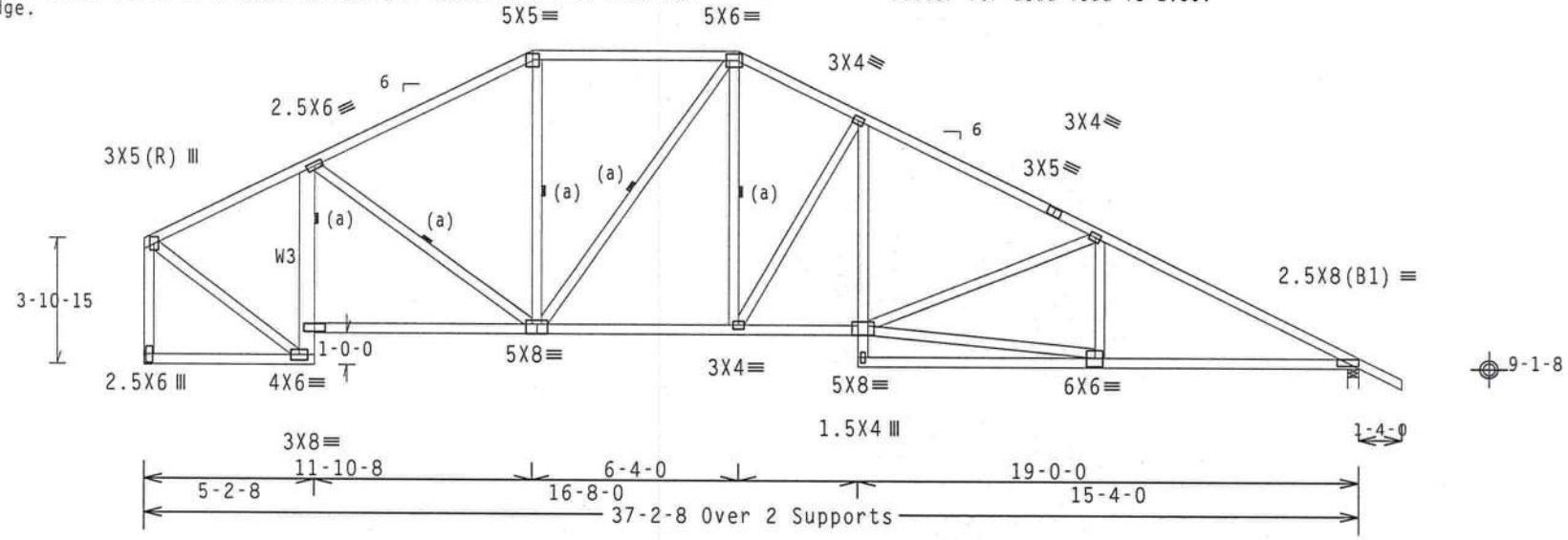

R=1524 U=0
RL=177/-203 H=Simpson HUS26
Supported Member Face: (4) 0.148"x3" nails
Supporting Member Face: (14) 0.148"x3" nails
Supporting Member : (1) 2x6 SP #2

R=1629 U=13 W=4"

Design Crit: FBC2010Res/TPI-2007(STD)

PLT TYP. Wave FT/RT=20%(0%)/0(0) 10.03.02 QTY: FL/-/4/-/-/R/- Scale =.1875"/Ft.

ALPINE
ITW Building Components Group Inc.
Haines City, FL 33844
FL COA #0 278

WARNING READ AND FOLLOW ALL NOTES ON THIS SHEET!
IMPORTANT FURNISH THIS DESIGN TO ALL CONTRACTORS INCLUDING INSTALLERS.

Trusses require extreme care in fabricating, handling, shipping, installing and bracing. Refer to and follow the latest edition of BCSI (Building Component Safety Information, by TPI and WTCA) for safety practices prior to performing these functions. Installers shall provide temporary bracing per BCSI. Unless noted otherwise, top chord shall have properly attached structural sheathing and bottom chord shall have a properly attached rigid ceiling. Locations shown for permanent lateral restraint of webs shall have bracing installed per BCSI sections B3, B7 or B10, as applicable.

ITW Building Components Group Inc. (ITWBCG) shall not be responsible for any deviation from this design, any failure to build the truss in conformance with ANSI/TPI 1, or for handling, shipping, installation and bracing of trusses. Apply plates to each face of truss and position as shown above and on the Joint Details, unless noted otherwise. Refer to drawings 160A-Z for standard plate positions. A seal on this drawing or cover page listing this drawing, indicates acceptance of professional engineering responsibility solely for the design shown. The suitability and use of this design for any structure is the responsibility of the Building Designer per ANSI/TPI 1 Sec.2. For more information see: This job's general notes page: ITW-BCG: www.itwbcg.com; TPI: www.tpinst.org; WTCA: www.sbcindustry.com; ICC: www.iccsafe.org

WALTER P. FINN LICENSE No. 22839 STATE OF FLORIDA PROFESSIONAL ENGINEER

05/16/2012

TC LL	20.0 PSF	REF R487-- 81730
TC DL	10.0 PSF	DATE 05/16/12
BC DL	10.0 PSF	DRW HCUSR487 12137016
BC LL	0.0 PSF	HC-ENG JB/WPF
TOT.LD.	40.0 PSF	SEQN- 95827
DUR.FAC.	1.25	
SPACING	24.0"	JREF- 1UM4487_Z03

(12-089--BRYAN ZECHER Garrison Res. -- , ** - HT21A 37'2"8 Common)

THIS DWG PREPARED FROM COMPUTER INPUT (LOADS & DIMENSIONS) SUBMITTED BY TRUSS MFR.

Top chord 2x4 SP #1
Bot chord 2x4 SP #1
Webs 2x4 SP #3 :W3 2x6 SP #1 Dense:

Left end vertical not exposed to wind pressure.

Roof overhang supports 2.00 psf soffit load.

H = recommended connection based on manufacturer tested capacities and calculations. Conditions may exist that require different connections than indicated. Refer to manufacturer publication for additional information.

(a) Continuous lateral bracing equally spaced on member.

In lieu of structural panels use purlins to brace all flat TC @ 24" OC.

MWFRS loads based on trusses located at least 15.00 ft. from roof edge.

120 mph wind, 15.00 ft mean hgt, ASCE 7-10, CLOSED bldg, not located within 9.00 ft from roof edge, RISK CAT II, EXP C, wind TC DL=5.0 psf, wind BC DL=5.0 psf. GCpi(+/-)=0.18

Wind loads and reactions based on MWFRS with additional C&C member design.

Calculated horizontal deflection is 0.12" due to live load and 0.19" due to dead load.

These support conditions used at bearings indicated
(H1) = Simpson HUS26 w/ (1)2x6 SP M-26 supporting member.
(14) 0.148"x3" nails into supporting member,
(4) 0.148"x3" nails into supported member.

Bottom chord checked for 10.00 psf non-concurrent live load.

Deflection meets L/240 live and L/180 total load. Creep increase factor for dead load is 1.50.

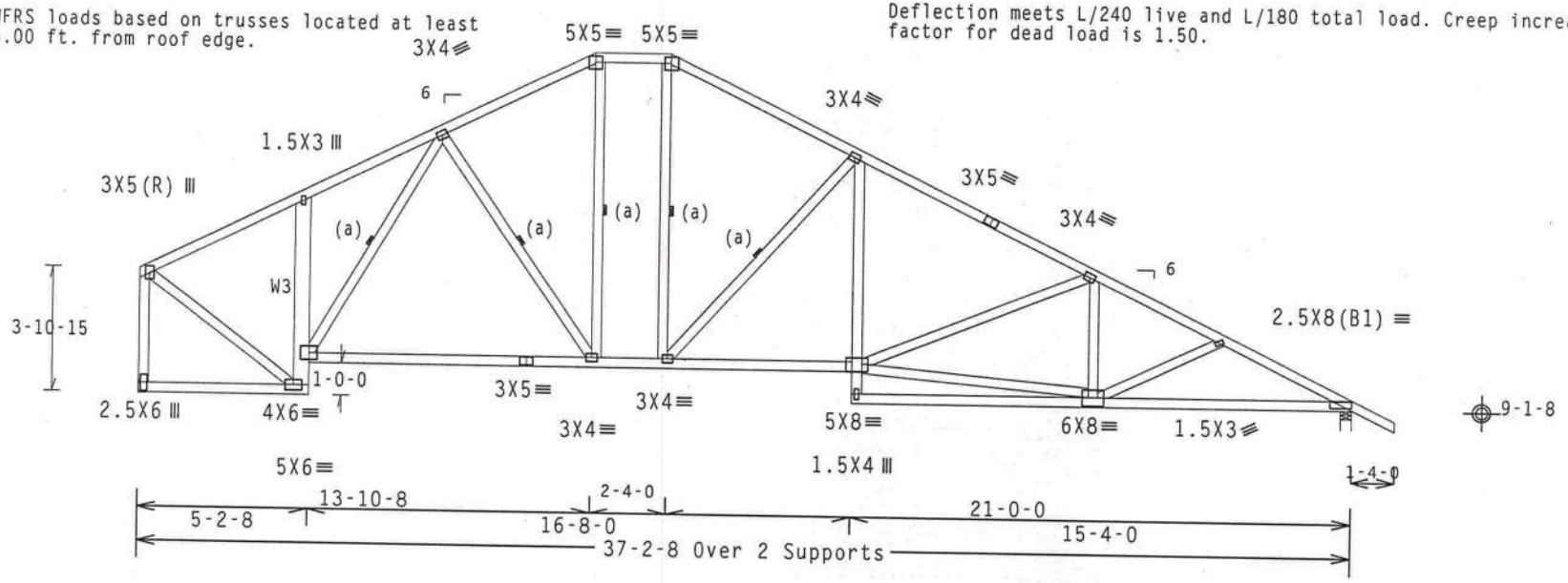

R=1524 U=0
RL=199/-226 H=Simpson HUS26
Supported Member Face: (4) 0.148"x3" nails
Supporting Member Face: (14) 0.148"x3" nails
Supporting Member : (1) 2x6 SP #2

R=1629 U=0 W=4"

PLT TYP. Wave

Design Crit: FBC2010Res/TPI-2007(STD)
FT/RT=20%(0%)/0(0)

10:03.11 0209.00 QTY

FL/-/4/-/-/R/-

Scale =.1875"/Ft.

TC LL	20.0 PSF	REF R487-- 81731
TC DL	10.0 PSF	DATE 05/16/12
BC DL	10.0 PSF	DRW HCUSR487 12137017
BC LL	0.0 PSF	HC-ENG JB/WPF
TOT.LD.	40.0 PSF	SEQN- 95901
DUR.FAC.	1.25	
SPACING	24.0"	JREF- 1UM4487_Z03

ALPINE
ITW Building Components Group Inc.
Haines City, FL 33844
FL COA #0 278

WARNING READ AND FOLLOW ALL NOTES ON THIS SHEET!
IMPORTANT FURNISH THIS DESIGN TO ALL CONTRACTORS INCLUDING INSTALLERS.

Trusses require extreme care in fabricating, handling, shipping, installing and bracing. Refer to and follow the latest edition of BCSI (Building Component Safety Information, by TPI and WTCA) for safety practices prior to performing these functions. Installers shall provide temporary bracing per BCSI. Unless noted otherwise, top chord shall have properly attached structural sheathing and bottom chord shall have a properly attached rigid ceiling. Locations shown for permanent lateral restraint of webs shall have bracing installed per BCSI sections B3, B7 or B10, as applicable.

ITW Building Components Group Inc. (ITWBCG) shall not be responsible for any deviation from this design, any failure to build the truss in conformance with ANSI/TPI 1, or for handling, shipping, installing and bracing of trusses. Apply plates to each face of truss and position as shown above and on the Joint Details, unless noted otherwise. Refer to drawings 160A-Z for standard plate positions. A seal on this drawing or cover page listing this drawing, indicates acceptance of professional engineering responsibility solely for the design shown. The suitability and use of this design for any structure is the responsibility of the Building Designer per ANSI/TPI 1 Sec.2. For more information see: This job's general notes page; ITW-BCG: www.itwbcg.com; TPI: www.tpinst.org; WTCA: www.sbcindustry.com; ICC: www.iccsafe.org

WALTER P. FINN
LICENSE
No.22839
STATE OF FLORIDA
PROFESSIONAL ENGINEER

05/16/2012

(12-089--BRYAN ZECHER Garrison Res. -- , ** - B 21'8" Common)

THIS DWG PREPARED FROM COMPUTER INPUT (LOADS & DIMENSIONS) SUBMITTED BY TRUSS MFR.

Top chord 2x4 SP #1
Bot chord 2x4 SP #1
Webs 2x4 SP #3

Roof overhang supports 2.00 psf soffit load.

Bottom chord checked for 10.00 psf non-concurrent live load.

MWFRS loads based on trusses located at least 7.50 ft. from roof edge.

120 mph wind, 15.00 ft mean hgt, ASCE 7-10, CLOSED bldg, not located within 9.00 ft from roof edge, RISK CAT II, EXP C, wind TC DL=5.0 psf, wind BC DL=5.0 psf. GCpi(+/-)=0.18

Wind loads and reactions based on MWFRS with additional C&C member design.

Deflection meets L/240 live and L/180 total load. Creep increase factor for dead load is 1.50.

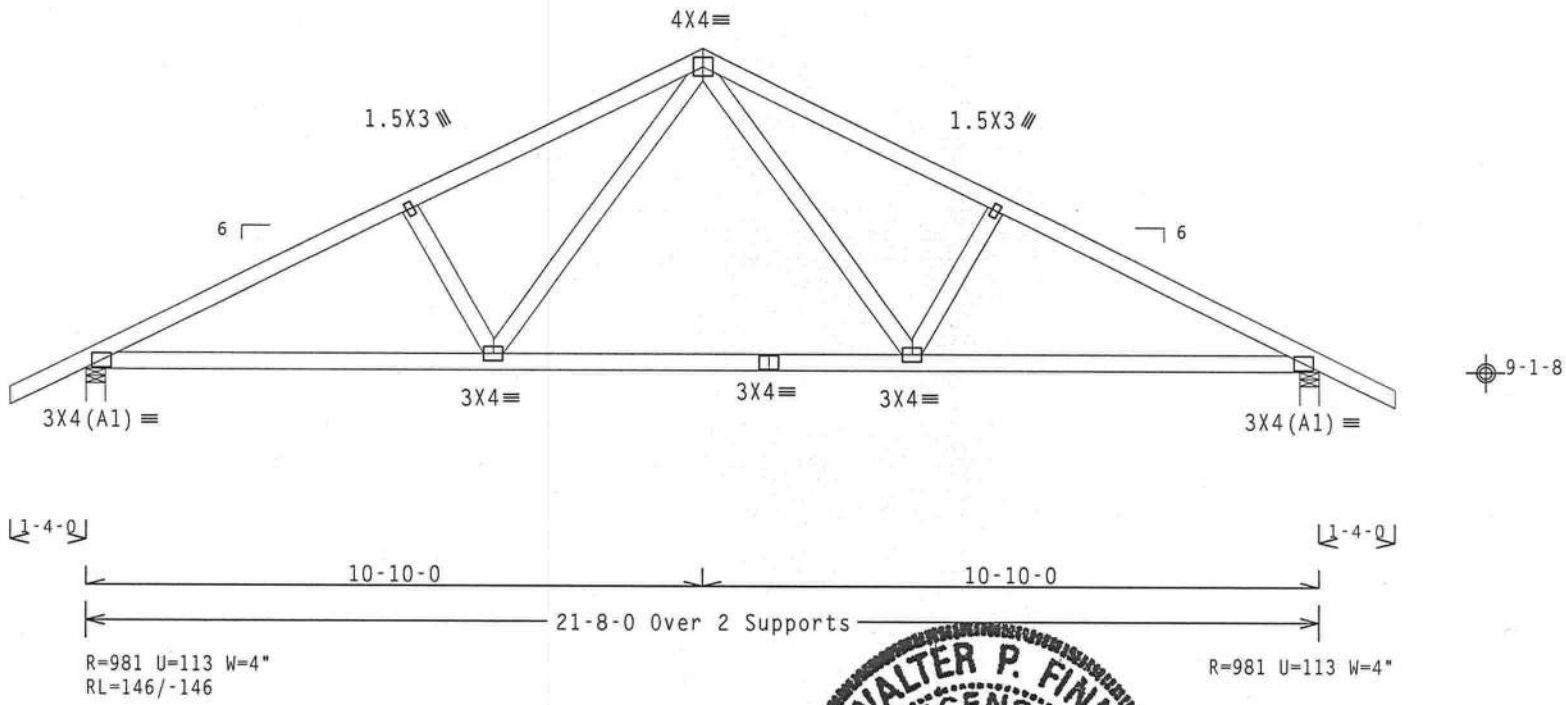

Design Crit: FBC2010Res/TPI-2007(STD) 10/03. 02 QTY: 3

PLT TYP. Wave

FT/RT=20%(0%)/0(0)

FL/-/4/-/-/R/-

Scale =.3125"/Ft.

ALPINE
ITW Building Components Group Inc.
Haines City, FL 33844
FL COA #0 278

WARNING READ AND FOLLOW ALL NOTES ON THIS SHEET!
IMPORTANT FURNISH THIS DESIGN TO ALL CONTRACTORS INCLUDING INSTALLERS.

Trusses require extreme care in fabricating, handling, shipping, installing and bracing. Refer to and follow the latest edition of BCSI (Building Component Safety Information, by TPI and WTCA) for safety practices prior to performing these functions. Installers shall provide temporary bracing per BCSI. Unless noted otherwise, top chord shall have properly attached structural sheathing and bottom chord shall have a properly attached rigid ceiling. Locations shown for permanent lateral restraint of webs shall have bracing installed per BCSI sections B3, B7 or B10, as applicable.

ITW Building Components Group Inc. (ITWBCG) shall not be responsible for any deviation from this design, any failure to build the truss in conformance with ANSI/TPI 1, or for handling, shipping, installing and bracing of trusses. Apply plates to each face of truss and position as shown above and on the Joint Details, unless noted otherwise. Refer to drawings 160A-Z for standard plate positions. A seal on this drawing or cover page listing this drawing, indicates acceptance of professional engineering responsibility solely for the design shown. The suitability and use of this design for any structure is the responsibility of the Building Designer per ANSI/TPI 1 Sec.2. For more information see: This job's general notes page; ITW-BCG: www.itwbcg.com; TPI: www.tpinst.org; WTCA: www.sbcindustry.com; ICC: www.iccsafe.org

WALTER P. FINN LICENSE No. 22839 STATE OF FLORIDA PROFESSIONAL ENGINEER

05/16/2012

TC LL	20.0 PSF	REF R487-- 81732
TC DL	10.0 PSF	DATE 05/16/12
BC DL	10.0 PSF	DRW HCUSR487 12137018
BC LL	0.0 PSF	HC-ENG JB/WPF
TOT.LD.	40.0 PSF	SEQN- 95249
DUR.FAC.	1.25	
SPACING	24.0"	JREF- 1UM4487_Z03

(12-089--BRYAN ZECHER Garrison Res. -- , ** - B1 21'8" Common)

THIS DWG PREPARED FROM COMPUTER INPUT (LOADS & DIMENSIONS) SUBMITTED BY TRUSS MFR.

Top chord 2x4 SP #1
Bot chord 2x4 SP #1
Webs 2x4 SP #3

Roof overhang supports 2.00 psf soffit load.

Bottom chord checked for 10.00 psf non-concurrent live load.

MWFRS loads based on trusses located at least 7.50 ft. from roof edge.

120 mph wind, 15.00 ft mean hgt, ASCE 7-10, CLOSED bldg, not located within 9.00 ft from roof edge, RISK CAT II, EXP C, wind TC DL=5.0 psf, wind BC DL=5.0 psf. GCpi(+/-)=0.18

Wind loads and reactions based on MWFRS with additional C&C member design.

Deflection meets L/240 live and L/180 total load. Creep increase factor for dead load is 1.50.

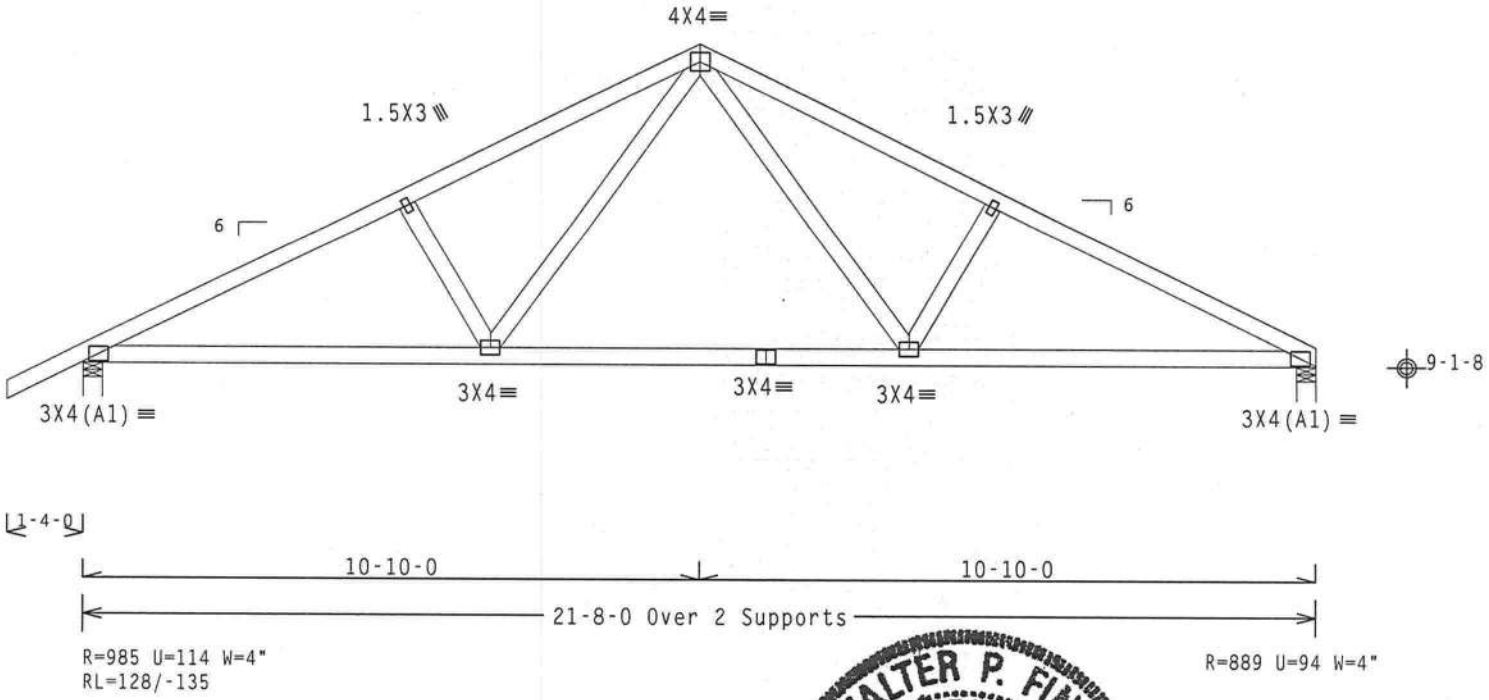

Design Crit: FBC2010Res/TPI-2007(STD) 10.03 11.0209 20 QTY 1 FL/-/4/-/-/R/-

PLT TYP. Wave FT/RT=20%(0%)/0(0) Scale =.3125"/Ft.

ALPINE
ITW Building Components Group Inc.
Haines City, FL 33844
FL COA #0 278

WARNING READ AND FOLLOW ALL NOTES ON THIS SHEET!
IMPORTANT FURNISH THIS DESIGN TO ALL CONTRACTORS INCLUDING INSTALLERS.

Trusses require extreme care in fabricating, handling, shipping, installing and bracing. Refer to and follow the latest edition of BCSI (Building Component Safety Information, by TPI and WTCA) for recommended practices prior to performing these functions. Installers shall provide temporary bracing per BCSI. Unless noted otherwise, top chord shall have properly attached structural sheathing and bottom chord shall have a properly attached rigid ceiling. Locations shown for permanent lateral restraint of webs shall have bracing installed per BCSI sections B3, B7 or B10, as applicable.

ITW Building Components Group Inc. (ITWBCG) shall not be responsible for any deviation from this design, any failure to build the truss in conformance with ANSI/TPI 1, or for handling, shipping, installing and bracing of trusses. Apply plates to each face of truss and position as shown above and on the Joint Details, unless noted otherwise. Refer to drawings 160A-Z for standard plate positions. A seal on this drawing or cover page listing this drawing, indicates acceptance of professional engineering responsibility solely for the design shown. The suitability and use of this design for any structure is the responsibility of the Building Designer per ANSI/TPI 1 Sec.2. For more information see: This job's general notes page; ITW-BCG: www.itwbcg.com; TPI: www.tpinst.org; WTCA: www.sbcindustry.com; ICC: www.iccsafe.org

WALTER P. FINN LICENSE No.22839 STATE OF FLORIDA PROFESSIONAL ENGINEER
05/16/2012

TC LL	20.0 PSF	REF	R487-- 81733
TC DL	10.0 PSF	DATE	05/16/12
BC DL	10.0 PSF	DRW	HCUSR487 12137019
BC LL	0.0 PSF	HC-ENG	JB/WPF
TOT.LD.	40.0 PSF	SEQN-	95252
DUR.FAC.	1.25		
SPACING	24.0"	JREF-	1UM4487_Z03

(12-089--BRYAN ZECHER Garrison Res. -- , ** - BS 10'9"4 Common)

THIS DWG PREPARED FROM COMPUTER INPUT (LOADS & DIMENSIONS) SUBMITTED BY TRUSS MFR.

Top chord 2x4 SP #1
Bot chord 2x4 SP #1
Webs 2x4 SP #3

H = recommended connection based on manufacturer tested capacities and calculations. Conditions may exist that require different connections than indicated. Refer to manufacturer publication for additional information.

These support conditions used at bearings indicated
(H1) = Simpson LUS24 w/ (1)2x4 SP #1 supporting member.
(4) 0.148"x3" nails into supporting member,
(2) 0.148"x3" nails into supported member.

MWFRS loads based on trusses located at least 30.00 ft. from roof edge.

120 mph wind, 15.00 ft mean hgt, ASCE 7-10, CLOSED bldg, not located within 9.00 ft from roof edge, RISK CAT II, EXP C, wind TC DL=5.0 psf, wind BC DL=5.0 psf. GCpi(+/-)=0.18

Wind loads and reactions based on MWFRS with additional C&C member design.

Right end vertical not exposed to wind pressure.

Bottom chord checked for 10.00 psf non-concurrent live load.

Deflection meets L/240 live and L/180 total load. Creep increase factor for dead load is 1.50.

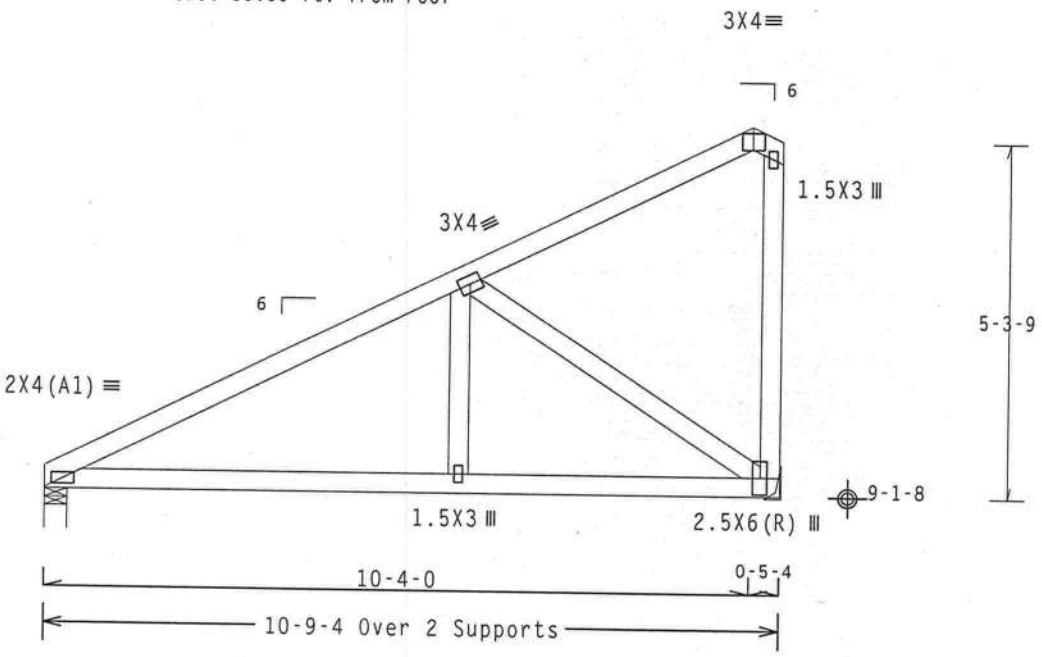

R=450 U=0 W=4"
RL=85/-31

R=437 [illegible] LUS24
Su[illegible] (2) 0.148"x3" nails
[illegible] (4) 0.148"x3" nails
[illegible] 4 SP #1

PLT TYP. Wave

Design Crit: FBC2010Res/TPI-2007(STD)
FT/RT=20%(0%)/0(0)

10-03-[illegible] QTY: [illegible]

FL/-/4/-/-/R/-

Scale =.375"/Ft.

WALTER P. FINN LICENSE No. 22839 STATE OF FLORIDA PROFESSIONAL ENGINEER
05/16/2012

TC LL	20.0 PSF	REF R487-- 81734
TC DL	10.0 PSF	DATE 05/16/12
BC DL	10.0 PSF	DRW HCUSR487 12137020
BC LL	0.0 PSF	HC-ENG JB/WPF
TOT.LD.	40.0 PSF	SEQN- 95148
DUR.FAC.	1.25	
SPACING	24.0"	JREF- 1UM4487_Z03

ALPINE
ITW Building Components Group Inc.
Haines City, FL 33844
FL COA #0 278

WARNING READ AND FOLLOW ALL NOTES ON THIS SHEET!
IMPORTANT FURNISH THIS DESIGN TO ALL CONTRACTORS INCLUDING INSTALLERS.

Trusses require extreme care in fabricating, handling, shipping, installing and bracing. Refer to and follow the latest edition of BCSI (Building Component Safety Information, by TPI and WTCA) for safety practices prior to performing these functions. Installers shall provide temporary bracing per BCSI. Unless noted otherwise, top chord shall have properly attached structural sheathing and bottom chord shall have a properly attached rigid ceiling. Locations shown for permanent lateral restraint of webs shall have bracing installed per BCSI sections B3, B7 or B10, as applicable.

ITW Building Components Group Inc. (ITWBCG) shall not be responsible for any deviation from this design, any failure to build the truss in conformance with ANSI/TPI 1, or for handling, shipping, installing and bracing of trusses. Apply plates to each face of truss and position as shown above and on the Joint Details, unless noted otherwise. Refer to drawings 160A-Z for standard plate positions. A seal on this drawing or cover page listing this drawing, indicates acceptance of professional engineering responsibility solely for the design shown. The suitability and use of this design for any structure is the responsibility of the Building Designer per ANSI/TPI 1 Sec.2. For more information see: This job's general notes page; ITW-BCG: www.itwbcg.com; TPI: www.tpinst.org; WTCA: www.sbcindustry.com; ICC: www.iccsafe.org

(12-089--BRYAN ZECHER Garrison Res. -- , ** - H7B 21'8" Common Girder)

THIS DWG PREPARED FROM COMPUTER INPUT (LOADS & DIMENSIONS) SUBMITTED BY TRUSS MFR.

Top chord 2x4 SP #1
Bot chord 2x4 SP #1
Webs 2x4 SP #3

Special loads
------(Lumber Dur.Fac.=1.25 / Plate Dur.Fac.=1.25)

TC- From	62 plf	at -1.33 to	62 plf	at 7.00
TC- From	62 plf	at 7.00 to	62 plf	at 10.73
TC- From	31 plf	at 10.73 to	31 plf	at 14.67
TC- From	62 plf	at 14.67 to	62 plf	at 23.00
BC- From	4 plf	at -1.33 to	4 plf	at 0.00
BC- From	20 plf	at 0.00 to	20 plf	at 10.73
BC- From	10 plf	at 10.73 to	10 plf	at 14.64
BC- From	20 plf	at 14.64 to	20 plf	at 21.67
BC- From	4 plf	at 21.67 to	4 plf	at 23.00

TC- 188.65 lb Conc. Load at 12.77
TC- 435.25 lb Conc. Load at 14.60
BC- 851.19 lb Conc. Load at 10.73
BC- 129.14 lb Conc. Load at 12.77
BC- 503.64 lb Conc. Load at 14.64

Wind loads and reactions based on MWFRS with additional C&C member design.

Trusses or components connecting to this girder have been modified by the truss designer. The loading for this girder requires verification for accuracy.

120 mph wind, 15.00 ft mean hgt, ASCE 7-10, CLOSED bldg, not located within 4.50 ft from roof edge, RISK CAT II, EXP C, wind TC DL=5.0 psf, wind BC DL=5.0 psf. GCpi(+/-)=0.18

Roof overhang supports 2.00 psf soffit load.

In lieu of structural panels use purlins to brace all flat TC @ 24" OC.

Bottom chord checked for 10.00 psf non-concurrent live load.

Deflection meets L/240 live and L/180 total load. Creep increase factor for dead load is 1.50.

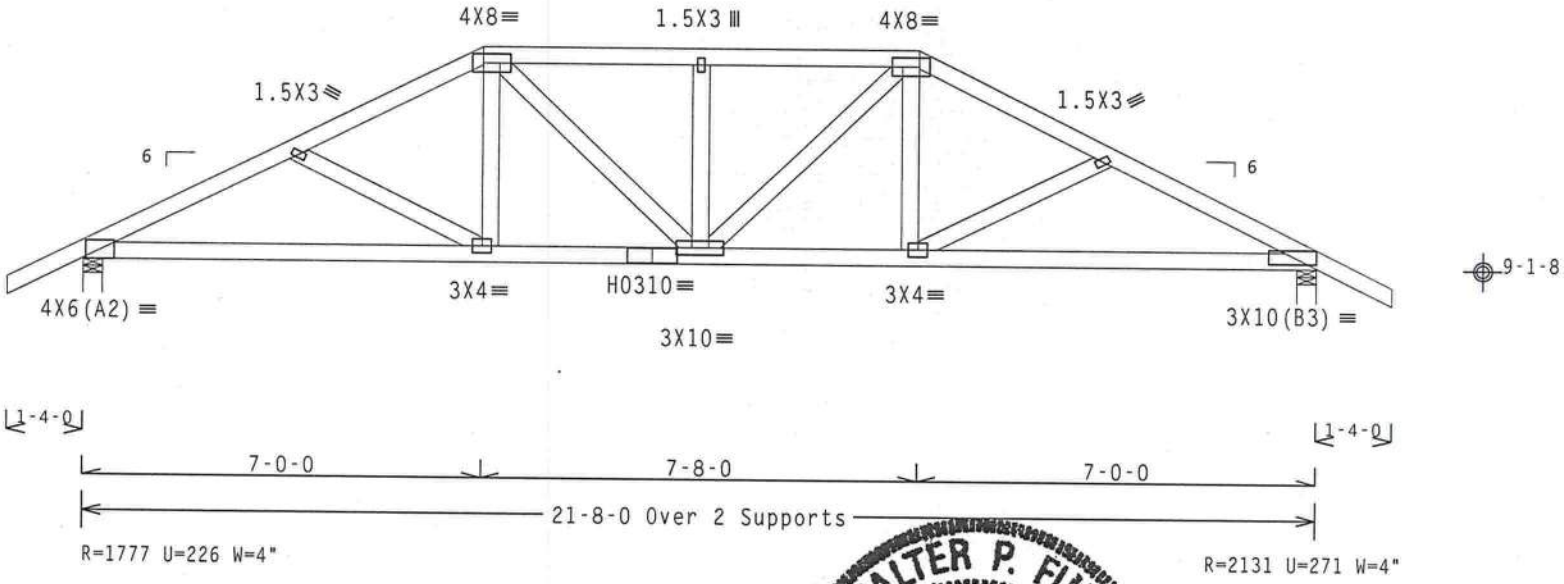

PLT TYP. 20 Gauge HS,Wave

Design Crit: FBC2010Res/TPI-2007(STD)
FT/RT=20%(0%)/0(0)

10.03.0 QTY: 1

FL/-/4/-/-/R/-

Scale =.3125"/Ft.

ALPINE
ITW Building Components Group Inc.
Haines City, FL 33844
FL COA #0 278

WARNING READ AND FOLLOW ALL NOTES ON THIS SHEET!
IMPORTANT FURNISH THIS DESIGN TO ALL CONTRACTORS INCLUDING INSTALLERS.

Trusses require extreme care in fabricating, handling, shipping, installing and bracing. Refer to and follow the latest edition of BCSI (Building Component Safety Information, by TPI and WTCA) for safety practices prior to performing these functions. Installers shall provide temporary bracing per BCSI. Unless noted otherwise, top chord shall have properly attached structural sheathing and bottom chord shall have a properly attached rigid ceiling. Locations shown for permanent lateral restraint of webs shall have bracing installed per BCSI sections B3, B7 or B10, as applicable.

ITW Building Components Group Inc. (ITWBCG) shall not be responsible for any deviation from this design, any failure to build the truss in conformance with ANSI/TPI 1, or for handling, shipping, installation and bracing of trusses. Apply plates to each face of truss and position as shown above and on the Joint Details, unless noted otherwise. Refer to drawings 160A-Z for standard plate positions. A seal on this drawing or cover page listing this drawing, indicates acceptance of professional engineering responsibility solely for the design shown. The suitability and use of this design for any structure is the responsibility of the Building Designer per ANSI/TPI 1 Sec.2. For more information see: This job's general notes page; ITW-BCG: www.itwbcg.com; TPI: www.tpinst.org; WTCA: www.sbcindustry.com; ICC: www.iccsafe.org

WALTER P. FINN
LICENSE
No. 22839
STATE OF FLORIDA
PROFESSIONAL ENGINEER

05/16/2012

TC LL	20.0 PSF	REF R487-- 81735
TC DL	10.0 PSF	DATE 05/16/12
BC DL	10.0 PSF	DRW HCUSR487 12137045
BC LL	0.0 PSF	HC-ENG JB/WPF
TOT.LD.	40.0 PSF	SEQN- 95355
DUR.FAC.	1.25	
SPACING	24.0"	JREF- 1UM4487_Z03

(12-089--BRYAN ZECHER Garrison Res. -- , ** - H7B1 21'8" Stepdown Hip Girder)

THIS DWG PREPARED FROM COMPUTER INPUT (LOADS & DIMENSIONS) SUBMITTED BY TRUSS MFR.

Top chord 2x4 SP #1
Bot chord 2x4 SP #1
Webs 2x4 SP #3

Special loads
------(Lumber Dur.Fac.=1.25 / Plate Dur.Fac.=1.25)

TC- From	62 plf at	-1.33 to	62 plf at	7.00
TC- From	62 plf at	7.00 to	62 plf at	8.00
TC- From	31 plf at	8.00 to	31 plf at	11.33
TC- From	62 plf at	11.33 to	62 plf at	21.67
BC- From	4 plf at	-1.33 to	4 plf at	0.00
BC- From	20 plf at	0.00 to	20 plf at	7.05
BC- From	10 plf at	7.05 to	10 plf at	10.83
BC- From	20 plf at	10.83 to	20 plf at	21.67

TC- 281.53 lb Conc. Load at 7.06
TC- 210.00 lb Conc. Load at 9.06
BC- 228.26 lb Conc. Load at 7.03
BC- 301.38 lb Conc. Load at 7.05
BC- 140.00 lb Conc. Load at 9.06
BC- 548.13 lb Conc. Load at 10.83

Wind loads and reactions based on MWFRS with additional C&C member design.

Trusses or components connecting to this girder have been modified by the truss designer. The loading for this girder requires verification for accuracy.

120 mph wind, 15.00 ft mean hgt, ASCE 7-10, CLOSED bldg, not located within 4.50 ft from roof edge, RISK CAT II, EXP C, wind TC DL=5.0 psf, wind BC DL=5.0 psf. GCpi(+/-)=0.18

Roof overhang supports 2.00 psf soffit load.

In lieu of structural panels use purlins to brace all flat TC @ 24" OC.

Bottom chord checked for 10.00 psf non-concurrent live load.

Deflection meets L/240 live and L/180 total load. Creep increase factor for dead load is 1.50.

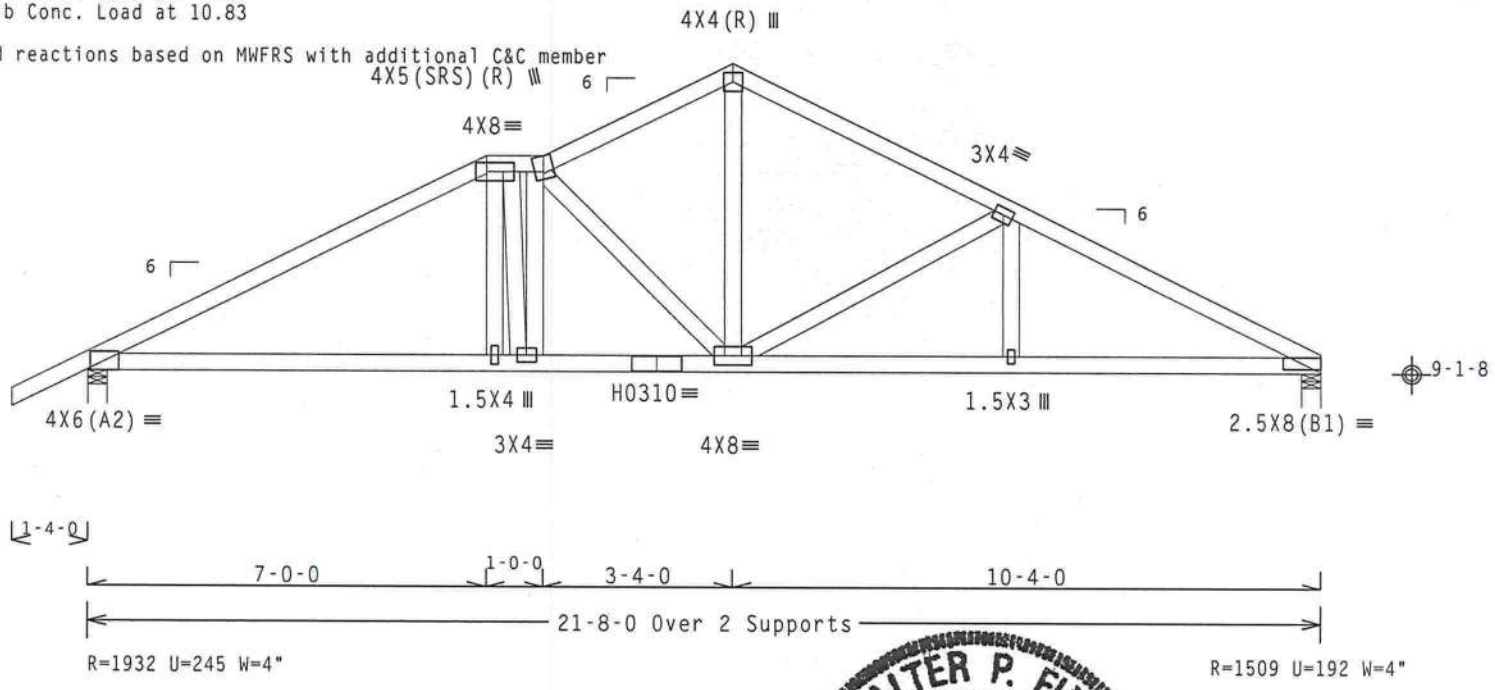

Design Crit: FBC2010Res/TPI-2007(STD)

PLT TYP. 20 Gauge HS,Wave FT/RT=20%(0%)/0(0) 10.03.11.0209.20 QTY:1 FL/-/4/-/-/R/- Scale =.3125"/Ft.

ALPINE
ITW Building Components Group Inc.
Haines City, FL 33844
FL COA #0 278

WARNING READ AND FOLLOW ALL NOTES ON THIS SHEET!
IMPORTANT FURNISH THIS DESIGN TO ALL CONTRACTORS INCLUDING INSTALLERS.

Trusses require extreme care in fabricating, handling, shipping, installing and bracing. Refer to and follow the latest edition of BCSI (Building Component Safety Information, by TPI and WTCA) for safety practices prior to performing these functions. Installers shall provide temporary bracing per BCSI. Unless noted otherwise, top chord shall have properly attached structural sheathing and bottom chord shall have a properly attached rigid ceiling. Locations shown for permanent lateral restraint of webs shall have bracing installed per BCSI sections B3, B7 or B10, as applicable.

ITW Building Components Group Inc. (ITWBCG) shall not be responsible for any deviation from this drawing, any failure to build the truss in conformance with ANSI/TPI 1, or for handling, shipping, installing and bracing of trusses. Apply plates to each face of truss and position as shown above and on the Joint Details, unless noted otherwise. Refer to drawings 160A-Z for standard plate positions. A seal on this drawing or cover page listing this drawing, indicates acceptance of professional engineering responsibility solely for the design shown. The suitability and use of this design for any structure is the responsibility of the Building Designer per ANSI/TPI 1 Sec.2. For more information see: This job's general notes page; ITW-BCG: www.itwbcg.com; TPI: www.tpinst.org; WTCA: www.sbcindustry.com; ICC: www.iccsafe.org

WALTER P. FINN LICENSE No.22839 STATE OF FLORIDA PROFESSIONAL ENGINEER
05/16/2012

TC LL	20.0 PSF	REF	R487-- 81736
TC DL	10.0 PSF	DATE	05/16/12
BC DL	10.0 PSF	DRW	HCUSR487 12137046
BC LL	0.0 PSF	HC-ENG	JB/WPF
TOT.LD.	40.0 PSF	SEQN-	95795
DUR.FAC.	1.25		
SPACING	24.0"	JREF-	1UM4487_Z03

(12-089--BRYAN ZECHER Garrison Res. -- , ** - H9B 21'8" Common)

THIS DWG PREPARED FROM COMPUTER INPUT (LOADS & DIMENSIONS) SUBMITTED BY TRUSS MFR.

Top chord 2x4 SP #1
Bot chord 2x4 SP #1
Webs 2x4 SP #3

Roof overhang supports 2.00 psf soffit load.

In lieu of structural panels use purlins to brace all flat TC @ 24" OC.

Deflection meets L/240 live and L/180 total load. Creep increase factor for dead load is 1.50.

120 mph wind, 15.00 ft mean hgt, ASCE 7-10, CLOSED bldg, not located within 9.00 ft from roof edge, RISK CAT II, EXP C, wind TC DL=5.0 psf, wind BC DL=5.0 psf. GCpi(+/-)=0.18

Wind loads and reactions based on MWFRS with additional C&C member design.

Bottom chord checked for 10.00 psf non-concurrent live load.

MWFRS loads based on trusses located at least 7.50 ft. from roof edge.

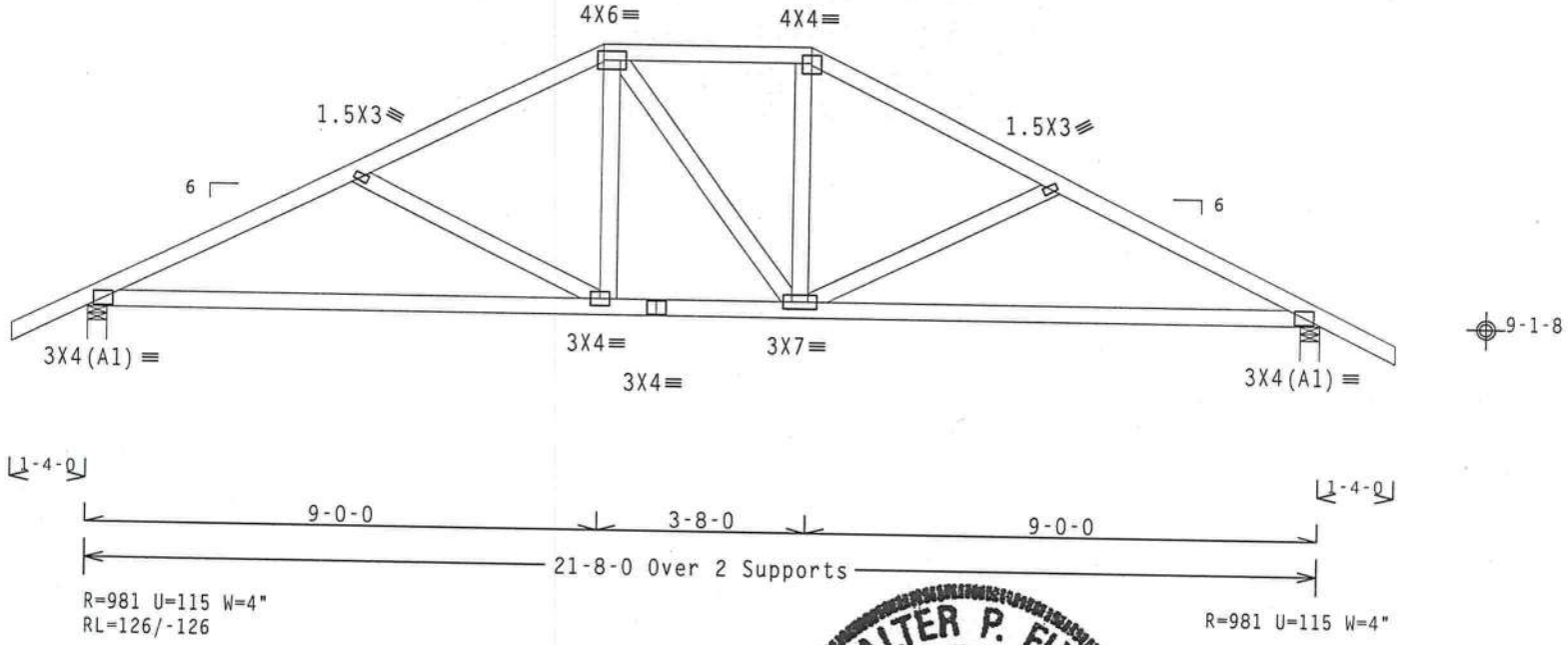

PLT TYP. Wave

Design Crit: FBC2010Res/TPI-2007(STD)
FT/RT=20%(0%)/0(0)

10.03 11.0209 20 QTY 1 FL/-/4/-/-/R/- Scale =.3125"/Ft.

ALPINE
ITW Building Components Group Inc.
Haines City, FL 33844
FL COA #0 278

WARNING READ AND FOLLOW ALL NOTES ON THIS SHEET!
IMPORTANT FURNISH THIS DESIGN TO ALL CONTRACTORS INCLUDING INSTALLERS.

Trusses require extreme care in fabricating, handling, shipping, installing and bracing. Refer to and follow the latest edition of BCSI (Building Component Safety Information, by TPI and WTCA) for recommended practices prior to performing these functions. Installers shall provide temporary bracing per BCSI. Unless noted otherwise, top chord shall have properly attached structural sheathing and bottom chord shall have a properly attached rigid ceiling. Locations shown for permanent lateral restraint of webs shall have bracing installed per BCSI sections B3, B7 or B10, as applicable.

ITW Building Components Group Inc. (ITWBCG) shall not be responsible for any deviation from this design, any failure to build the truss in conformance with ANSI/TPI 1, or for handling, shipping, installing and bracing of trusses. Apply plates to each face of truss and position as shown above and on the Joint Details, unless noted otherwise. Refer to drawings 160A-Z for standard plate positions. A seal on this drawing or cover page listing this drawing, indicates acceptance of professional engineering responsibility solely for the design shown. The suitability and use of this design for any structure is the responsibility of the Building Designer per ANSI/TPI 1 Sec.2. For more information see: This job's general notes page; ITW-BCG: www.itwbcg.com; TPI: www.tpinst.org; WTCA: www.sbcindustry.com; ICC: www.iccsafe.org

WALTER P. FINN
LICENSE
No.22839
STATE OF FLORIDA
PROFESSIONAL ENGINEER

05/16/2012

TC LL	20.0 PSF	REF	R487-- 81737
TC DL	10.0 PSF	DATE	05/16/12
BC DL	10.0 PSF	DRW	HCUSR487 12137021
BC LL	0.0 PSF	HC-ENG	JB/WPF
TOT.LD.	40.0 PSF	SEQN-	95246
DUR.FAC.	1.25		
SPACING	24.0"	JREF-	1UM4487_Z03

(12-089--BRYAN ZECHER Garrison Res. -- , ** - H9B1 21'8" Stepdown Hip)

THIS DWG PREPARED FROM COMPUTER INPUT (LOADS & DIMENSIONS) SUBMITTED BY TRUSS MFR.

Top chord 2x4 SP #1
Bot chord 2x4 SP #1
Webs 2x4 SP #3

Roof overhang supports 2.00 psf soffit load.

In lieu of structural panels use purlins to brace all flat TC @ 24" OC.

Deflection meets L/240 live and L/180 total load. Creep increase factor for dead load is 1.50.

120 mph wind, 15.00 ft mean hgt, ASCE 7-10, CLOSED bldg, not located within 9.00 ft from roof edge, RISK CAT II, EXP C, wind TC DL=5.0 psf, wind BC DL=5.0 psf. GCpi(+/-)=0.18

Wind loads and reactions based on MWFRS with additional C&C member design.

Bottom chord checked for 10.00 psf non-concurrent live load.

MWFRS loads based on trusses located at least 30.00 ft. from roof edge.

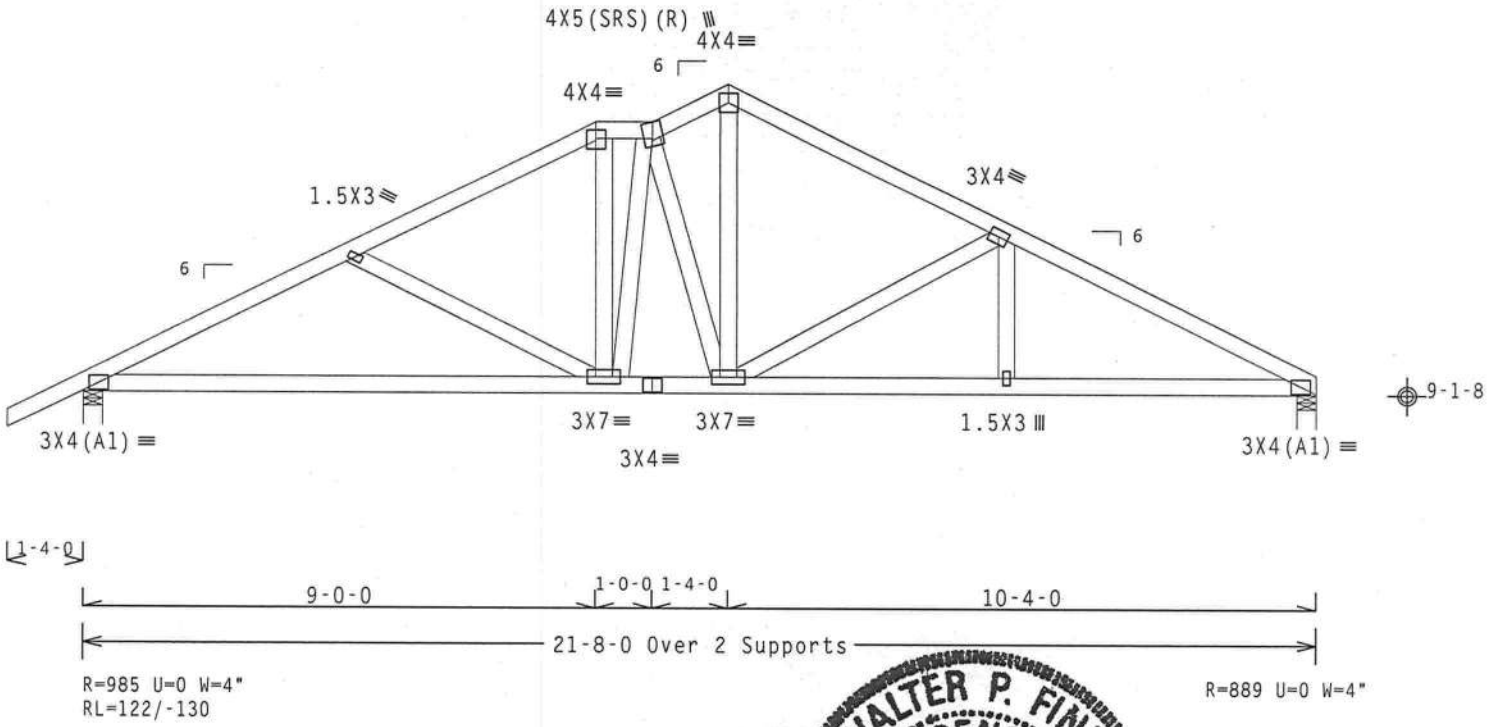

PLT TYP. Wave

Design Crit: FBC2010Res/TPI-2007(STD) 10/03/11 0300/30 QTY: 1 FL/-/4/-/-/R/- Scale =.3125"/Ft.
FT/RT=20%(0%)/0(0)

ALPINE
ITW Building Components Group Inc.
Haines City, FL 33844
FL COA #0 278

WARNING READ AND FOLLOW ALL NOTES ON THIS SHEET!
IMPORTANT FURNISH THIS DESIGN TO ALL CONTRACTORS INCLUDING INSTALLERS.

Trusses require extreme care in fabricating, handling, shipping, installing and bracing. Refer to and follow the latest edition of BCSI (Building Component Safety Information, by TPI and WTCA) for safety practices prior to performing these functions. Installers shall provide temporary bracing per BCSI. Unless noted otherwise, top chord shall have properly attached structural sheathing and bottom chord shall have a properly attached rigid ceiling. Locations shown for permanent lateral restraint of webs shall have bracing installed per BCSI sections B3, B7 or B10, as applicable.

ITW Building Components Group Inc. (ITWBCG) shall not be responsible for any deviation from this design, any failure to build the truss in conformance with ANSI/TPI 1, or for handling, shipping, installing and bracing of trusses. Apply plates to each face of truss and position as shown above and on the Joint Details, unless noted otherwise. Refer to drawings 160A-Z for standard plate positions. A seal on this drawing or cover page listing this drawing, indicates acceptance of professional engineering responsibility solely for the design shown. The suitability and use of this design for any structure is the responsibility of the Building Designer per ANSI/TPI 1 Sec.2. For more information see: This job's general notes page; ITW-BCG: www.itwbcg.com; TPI: www.tpinst.org; WTCA: www.sbcindustry.com; ICC: www.iccsafe.org

WALTER P. FINN LICENSE No.22839 STATE OF FLORIDA PROFESSIONAL ENGINEER

05/16/2012

TC LL	20.0 PSF	REF R487-- 81738
TC DL	10.0 PSF	DATE 05/16/12
BC DL	10.0 PSF	DRW HCUSR487 12137022
BC LL	0.0 PSF	HC-ENG JB/WPF
TOT.LD.	40.0 PSF	SEQN- 95255
DUR.FAC.	1.25	
SPACING	24.0"	JREF- 1UM4487_Z03

(12-089--BRYAN ZECHER Garrison Res. -- , ** - C 17'2" Common)

THIS DWG PREPARED FROM COMPUTER INPUT (LOADS & DIMENSIONS) SUBMITTED BY TRUSS MFR.

Top chord 2x4 SP #1
Bot chord 2x4 SP #1
Webs 2x4 SP #3

Roof overhang supports 2.00 psf soffit load.

Bottom chord checked for 10.00 psf non-concurrent live load.

MWFRS loads based on trusses located at least 7.50 ft. from roof edge.

120 mph wind, 15.00 ft mean hgt, ASCE 7-10, CLOSED bldg, not located within 9.00 ft from roof edge, RISK CAT II, EXP C, wind TC DL=5.0 psf, wind BC DL=5.0 psf. GCpi(+/-)=0.18

Wind loads and reactions based on MWFRS with additional C&C member design.

Deflection meets L/240 live and L/180 total load. Creep increase factor for dead load is 1.50.

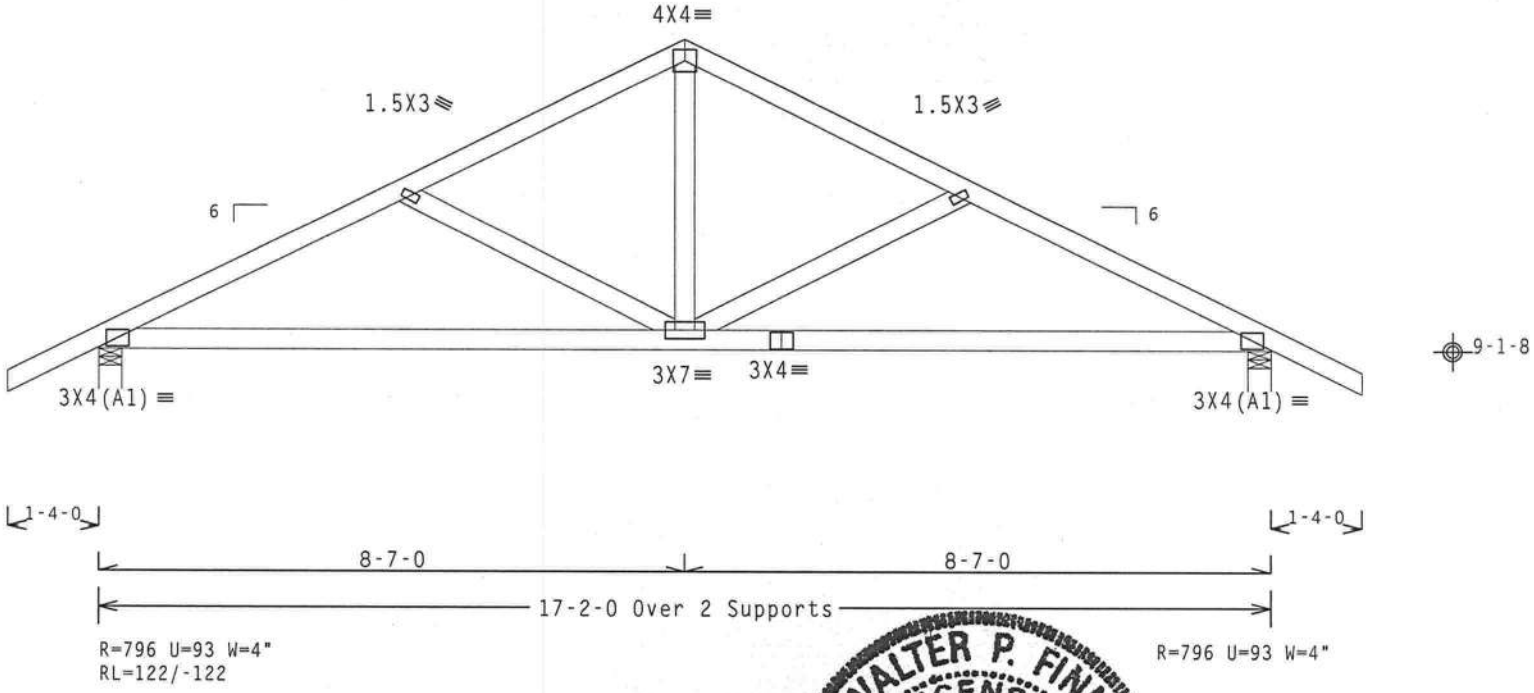

Design Crit: FBC2010Res/TPI-2007(STD) 10/03/11 0809:00 QTY 5 FL/-/4/-/-/R/- Scale =.375"/Ft.
FT/RT=20%(0%)/0(0)

PLT TYP. Wave

ALPINE
ITW Building Components Group Inc.
Haines City, FL 33844
FL COA #0 278

WARNING READ AND FOLLOW ALL NOTES ON THIS SHEET!
IMPORTANT FURNISH THIS DESIGN TO ALL CONTRACTORS INCLUDING INSTALLERS.

Trusses require extreme care in fabricating, handling, shipping, installing and bracing. Refer to and follow the latest edition of BCSI (Building Component Safety Information, by TPI and WTCA) for safety practices prior to performing these functions. Installers shall provide temporary bracing per BCSI. Unless noted otherwise, top chord shall have properly attached structural sheathing and bottom chord shall have a properly attached rigid ceiling. Locations shown for permanent lateral restraint of webs shall have bracing installed per BCSI sections B3, B7 or B10, as applicable.

ITW Building Components Group Inc. (ITWBCG) shall not be responsible for any deviation from this design, any failure to build the truss in conformance with ANSI/TPI 1, or for handling, shipping, installing and bracing of trusses. Apply plates to each face of truss and position as shown above and on the Joint Details, unless noted otherwise. Refer to drawings 160A-Z for standard plate positions. A seal on this drawing or cover page listing this drawing, indicates acceptance of professional engineering responsibility solely for the design shown. The suitability and use of this design for any structure is the responsibility of the Building Designer per ANSI/TPI 1 Sec.2. For more information see: This job's general notes page: ITW-BCG: www.itwbcg.com; TPI: www.tpinst.org; WTCA: www.sbcindustry.com; ICC: www.iccsafe.org

WALTER P. FINN LICENSE No.22839 STATE OF FLORIDA PROFESSIONAL ENGINEER
05/16/2012

TC LL	20.0 PSF	REF	R487-- 81739
TC DL	10.0 PSF	DATE	05/16/12
BC DL	10.0 PSF	DRW	HCUSR487 12137023
BC LL	0.0 PSF	HC-ENG	JB/WPF
TOT.LD.	40.0 PSF	SEQN-	95265
DUR.FAC.	1.25		
SPACING	24.0"	JREF-	1UM4487_Z03

(12-089--BRYAN ZECHER Garrison Res. -- , ** - CG 17'2" Common Girder)

THIS DWG PREPARED FROM COMPUTER INPUT (LOADS & DIMENSIONS) SUBMITTED BY TRUSS MFR.

Top chord 2x4 SP #1
Bot chord 2x6 SP M-26
Webs 2x4 SP #3

Special loads
------(Lumber Dur.Fac.=1.25 / Plate Dur.Fac.=1.25)
TC- From 62 plf at -1.33 to 62 plf at 8.58
TC- From 62 plf at 8.58 to 62 plf at 17.17
BC- From 4 plf at -1.33 to 4 plf at 0.00
BC- From 20 plf at 0.00 to 20 plf at 7.06
BC- From 10 plf at 7.06 to 10 plf at 15.06
BC- From 20 plf at 15.06 to 20 plf at 17.17
BC- 3070.39 lb Conc. Load at 7.06
BC- 1370.90 lb Conc. Load at 9.06
BC- 1494.52 lb Conc. Load at 11.06,13.06,15.06

Roof overhang supports 2.00 psf soffit load.

2 COMPLETE TRUSSES REQUIRED

Nail Schedule:0.131"x3", min. nails
Top Chord: 1 Row @12.00" o.c.
Bot Chord: 2 Rows @ 6.00" o.c. (Each Row)
Webs : 1 Row @ 4" o.c.
Use equal spacing between rows and stagger nails in each row to avoid splitting.

120 mph wind, 15.00 ft mean hgt, ASCE 7-10, CLOSED bldg, not located within 9.00 ft from roof edge, RISK CAT II, EXP C, wind TC DL=5.0 psf, wind BC DL=5.0 psf. GCpi(+/-)=0.18

Wind loads and reactions based on MWFRS with additional C&C member design.

Deflection meets L/240 live and L/180 total load. Creep increase factor for dead load is 1.50.

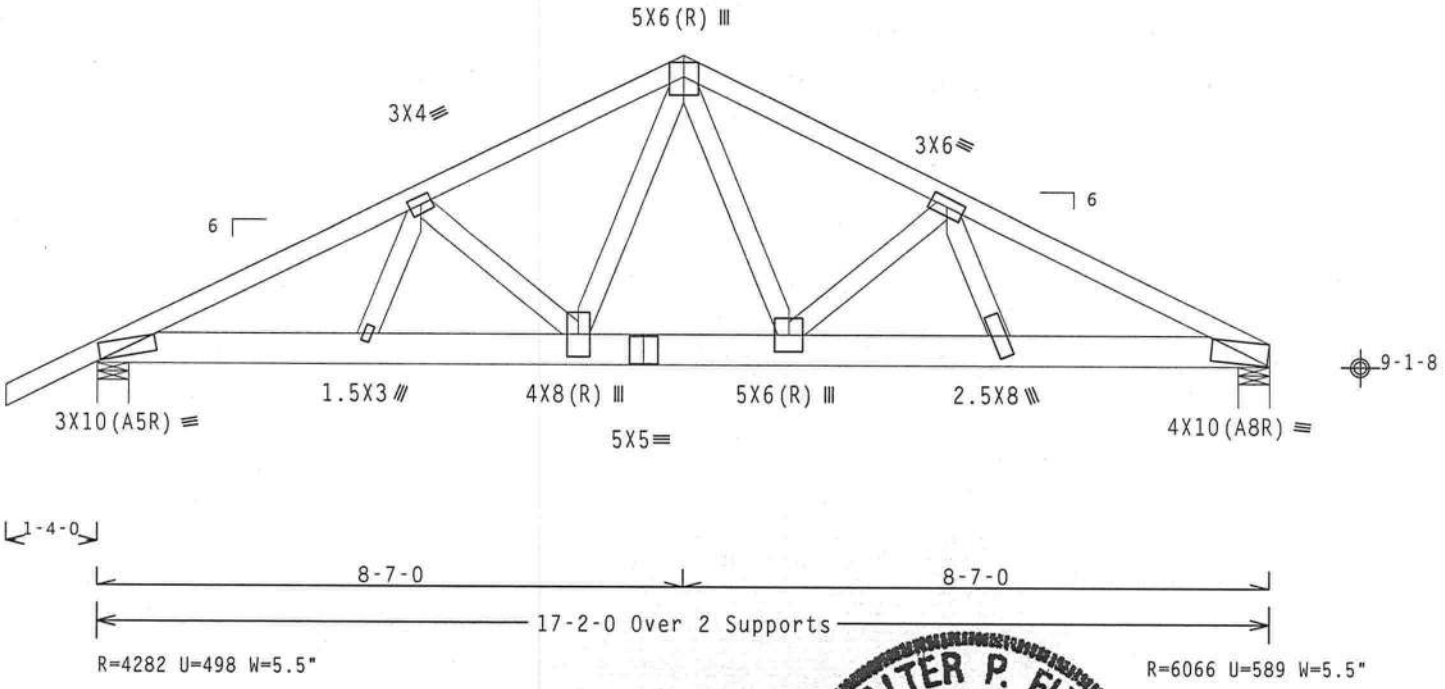

PLT TYP. Wave

Design Crit: FBC2010Res/TPI-2007(STD) 10.03.11.0209.20 QTY: 1 FL/-/4/-/-/R/- Scale =.375"/Ft.
FT/RT=20%(0%)/0(0)

ALPINE
ITW Building Components Group Inc.
Haines City, FL 33844
FL COA #0 278

WARNING READ AND FOLLOW ALL NOTES ON THIS SHEET!
IMPORTANT FURNISH THIS DESIGN TO ALL CONTRACTORS INCLUDING INSTALLERS.

Trusses require extreme care in fabricating, handling, shipping, installing and bracing. Refer to and follow the latest edition of BCSI (Building Component Safety Information, by TPI and WTCA) for safety practices prior to performing these functions. Installers shall provide temporary bracing per BCSI. Unless noted otherwise, top chord shall have properly attached structural sheathing and bottom chord shall have a properly attached rigid ceiling. Locations shown for permanent lateral restraint of webs shall have bracing installed per BCSI sections B3, B7 or B10, as applicable.

ITW Building Components Group Inc. (ITWBCG) shall not be responsible for any deviation from this design, any failure to build the truss in conformance with ANSI/TPI 1, or for handling, shipping, installing and bracing of trusses. Apply plates to each face of truss and position as shown above and on the Joint Details, unless noted otherwise. Refer to drawings 160A-Z for standard plate positions. A seal on this drawing or cover page listing this drawing, indicates acceptance of professional engineering responsibility solely for the design shown. The suitability and use of this design for any structure is the responsibility of the Building Designer per ANSI/TPI 1 Sec.2. For more information see: This job's general notes page; ITW-BCG: www.itwbcg.com; TPI: www.tpinst.org; WTCA: www.sbcindustry.com; ICC: www.iccsafe.org

WALTER P. FINN LICENSE No.22839 STATE OF FLORIDA PROFESSIONAL ENGINEER
05/16/2012

TC LL	20.0 PSF	REF	R487-- 81740
TC DL	10.0 PSF	DATE	05/16/12
BC DL	10.0 PSF	DRW	HCUSR487 12137047
BC LL	0.0 PSF	HC-ENG	JB/WPF
TOT.LD.	40.0 PSF	SEQN-	95405
DUR.FAC.	1.25		
SPACING	24.0"	JREF-	1UM4487_Z03

(12-089--BRYAN ZECHER Garrison Res. -- , ** - H7C 17'2" Stepdown Hip Girder)

THIS DWG PREPARED FROM COMPUTER INPUT (LOADS & DIMENSIONS) SUBMITTED BY TRUSS MFR.

Top chord 2x4 SP #1
Bot chord 2x4 SP #1
Webs 2x4 SP #3

Roof overhang supports 2.00 psf soffit load.

In lieu of structural panels use purlins to brace all flat TC @ 24" OC.

Deflection meets L/240 live and L/180 total load. Creep increase factor for dead load is 1.50.

120 mph wind, 15.00 ft mean hgt, ASCE 7-10, CLOSED bldg, Located anywhere in roof, RISK CAT II, EXP C, wind TC DL=5.0 psf, wind BC DL=5.0 psf. GCpi(+/-)=0.18

Wind loads and reactions based on MWFRS with additional C&C member design.

#1 hip supports 7-0-0 jacks with no webs.

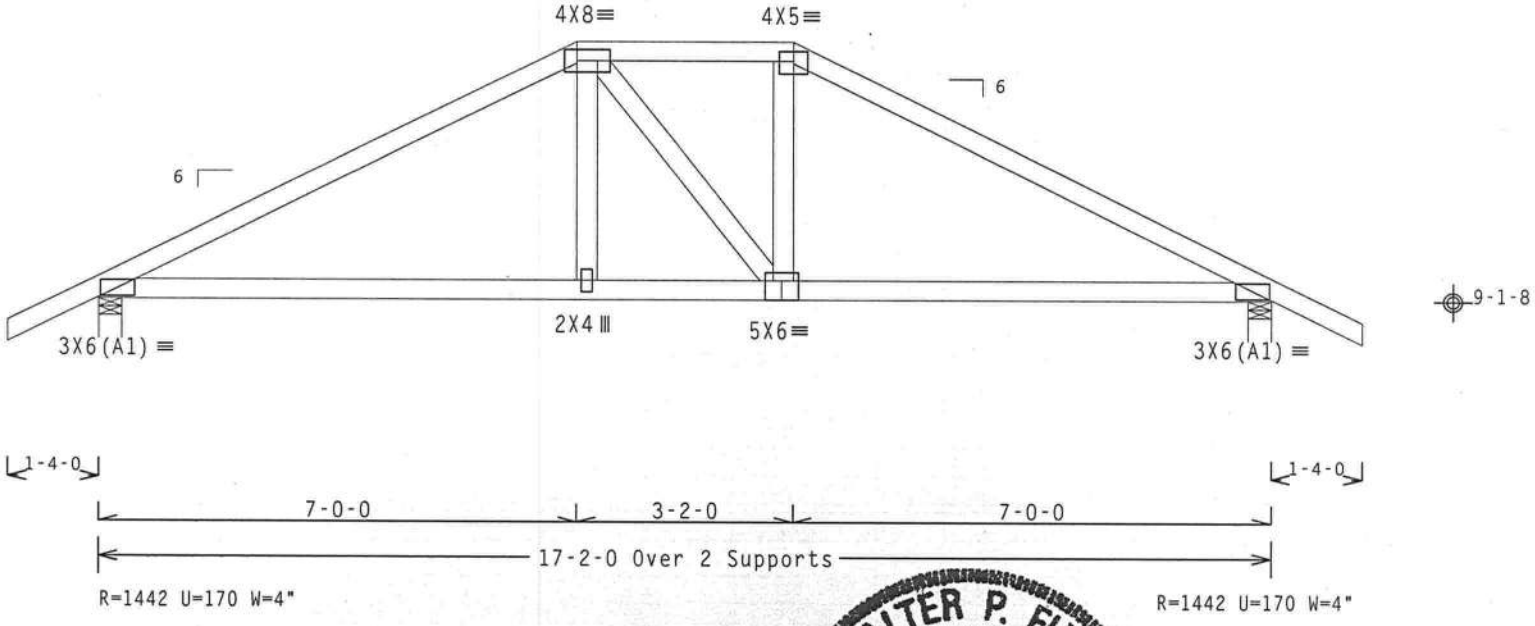

Design Crit: FBC2010Res/TPI-2007(STD)
FT/RT=20%(0%)/0(0)

PLT TYP. Wave

10.03.11.0209.20 QTY 1 FL/-/4/-/-/R/- Scale =.375"/Ft.

ALPINE
ITW Building Components Group Inc.
Haines City, FL 33844
FL COA #0 278

WARNING READ AND FOLLOW ALL NOTES ON THIS SHEET!
IMPORTANT FURNISH THIS DESIGN TO ALL CONTRACTORS INCLUDING INSTALLERS.

Trusses require extreme care in fabricating, handling, shipping, installing and bracing. Refer to and follow the latest edition of BCSI (Building Component Safety Information, by TPI and WTCA) for safety practices prior to performing these functions. Installers shall provide temporary bracing per BCSI. Unless noted otherwise, top chord shall have properly attached structural sheathing and bottom chord shall have a properly attached rigid ceiling. Locations shown for permanent lateral restraint of webs shall have bracing installed per BCSI sections B3, B7 or B10, as applicable.

ITW Building Components Group Inc. (ITWBCG) shall not be responsible for any deviation from this drawing, any failure to build the truss in conformance with ANSI/TPI 1, or for handling, shipping, installing and bracing of trusses. Apply plates to each face of truss and position as shown above and on the Joint Details, unless noted otherwise. Refer to drawings 160A-Z for standard plate positions. A seal on this drawing or cover page listing this drawing, indicates acceptance of professional engineering responsibility solely for the design shown. The suitability and use of this design for any structure is the responsibility of the Building Designer per ANSI/TPI 1 Sec.2. For more information see: This job's general notes page; ITW-BCG: www.itwbcg.com; TPI: www.tpinst.org; WTCA: www.sbcindustry.com; ICC: www.iccsafe.org

WALTER P. FINN
LICENSE
No. 22839
STATE OF FLORIDA
PROFESSIONAL ENGINEER
05/16/2012

TC LL	20.0 PSF	REF R487-- 81741
TC DL	10.0 PSF	DATE 05/16/12
BC DL	10.0 PSF	DRW HCUSR487 12137048
BC LL	0.0 PSF	HC-ENG JB/WPF
TOT.LD.	40.0 PSF	SEQN- 95258
DUR.FAC.	1.25	
SPACING	24.0"	JREF- 1UM4487_Z03

THIS DWG PREPARED FROM COMPUTER INPUT (LOADS & DIMENSIONS) SUBMITTED BY TRUSS MFR.

Top chord 2x4 SP #1
Bot chord 2x4 SP #1
Webs 2x4 SP #3

Roof overhang supports 2.00 psf soffit load.

H = recommended connection based on manufacturer tested capacities and calculations. Conditions may exist that require different connections than indicated. Refer to manufacturer publication for additional information.

Bottom chord checked for 10.00 psf non-concurrent live load.

120 mph wind, 15.00 ft mean hgt, ASCE 7-10, CLOSED bldg, not located within 4.50 ft from roof edge, RISK CAT II, EXP C, wind TC DL=5.0 psf, wind BC DL=5.0 psf. GCpi(+/-)=0.18

Wind loads and reactions based on MWFRS with additional C&C member design.

These support conditions used at bearings indicated
(H1) = Simpson LUS24 w/ (1)2x4 SP #1 supporting member.
(4) 0.148"x3" nails into supporting member.
(2) 0.148"x3" nails into supported member.

Deflection meets L/240 live and L/180 total load. Creep increase factor for dead load is 1.50.

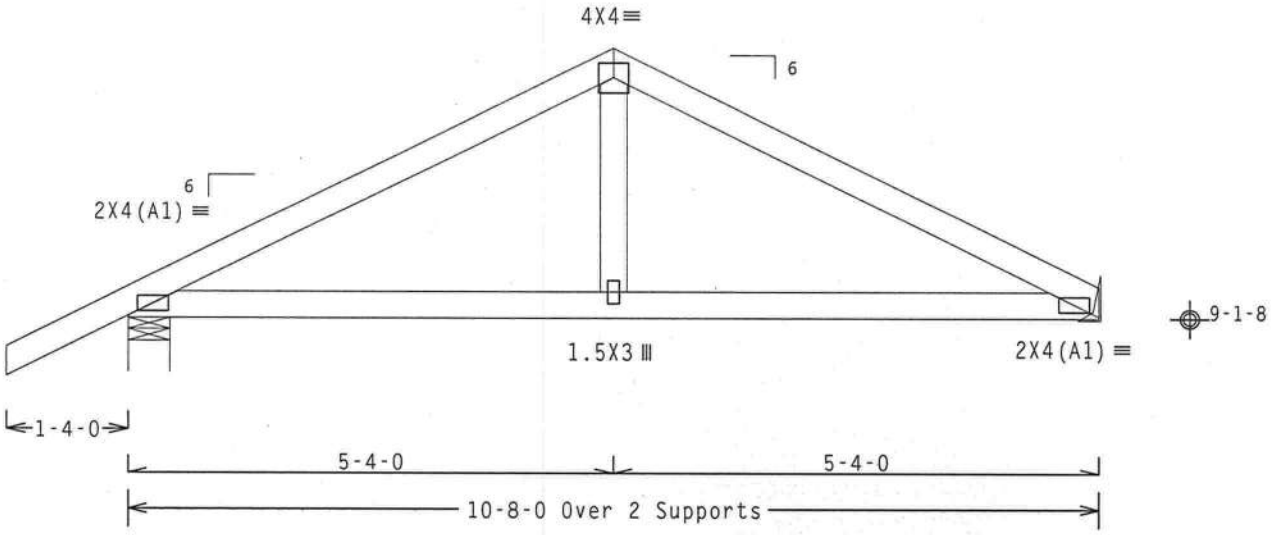

R=536 U=65 W=5.5"
RL=68/-76

R=44 U=44 H=Simpson LUS24
Supporting Member Face: (2) 0.148"x3" nails
Supported Member Face: (4) 0.148"x3" nails
Supporting Member : (1) 2x4 SP #1

Design Crit: FBC2010Res/TPI-2007(STD)
FT/RT=20%(0%)/0(0)

PLT TYP. Wave

10/03. No.22839

QTY: FL/-/4/-/-/R/-

Scale =.5"/Ft.

ALPINE
ITW Building Components Group Inc.
Haines City, FL 33844
FL COA #0 278

WARNING READ AND FOLLOW ALL NOTES ON THIS SHEET!
IMPORTANT FURNISH THIS DESIGN TO ALL CONTRACTORS INCLUDING INSTALLERS.

Trusses require extreme care in fabricating, handling, shipping, installing and bracing. Refer to and follow the latest edition of BCSI (Building Component Safety Information, by TPI and WTCA) for safety practices prior to performing these functions. Installers shall provide temporary bracing per BCSI. Unless noted otherwise, top chord shall have properly attached structural sheathing and bottom chord shall have a properly attached rigid ceiling. Locations shown for permanent lateral restraint of webs shall have bracing installed per BCSI sections B3, B7 or B10, as applicable.

ITW Building Components Group Inc. (ITWBCG) shall not be responsible for any deviation from this design, any failure to build the truss in conformance with ANSI/TPI 1, or for handling, shipping, installation and bracing of trusses. Apply plates to each face of truss and position as shown above and on the Joint Details, unless noted otherwise. Refer to drawings 160A-Z for standard plate positions. A seal on this drawing or cover page listing this drawing, indicates acceptance of professional engineering responsibility solely for the design shown. The suitability and use of this design for any structure is the responsibility of the Building Designer per ANSI/TPI 1 Sec.2. For more information see: This job's general notes page; ITW-BCG: www.itwbcg.com; TPI: www.tpinst.org; WTCA: www.sbcindustry.com; ICC: www.iccsafe.org

WALTER P. FINN LICENSE STATE OF FLORIDA PROFESSIONAL ENGINEER

05/16/2012

TC LL	20.0 PSF	REF R487-- 81742
TC DL	10.0 PSF	DATE 05/16/12
BC DL	10.0 PSF	DRW HCUSR487 12137024
BC LL	0.0 PSF	HC-ENG JB/WPF
TOT.LD.	40.0 PSF	SEQN- 95237
DUR.FAC.	1.25	
SPACING	24.0"	JREF- 1UM4487_Z03

THIS DWG PREPARED FROM COMPUTER INPUT (LOADS & DIMENSIONS) SUBMITTED BY TRUSS MFR.

Top chord 2x4 SP #1
Bot chord 2x4 SP #1
Webs 2x4 SP #3

Roof overhang supports 2.00 psf soffit load.

H = recommended connection based on manufacturer tested capacities and calculations. Conditions may exist that require different connections than indicated. Refer to manufacturer publication for additional information.

#1 hip supports 5-0-0 jacks with no webs.

120 mph wind, 15.00 ft mean hgt, ASCE 7-10, CLOSED bldg, Located anywhere in roof, RISK CAT II, EXP C, wind TC DL=5.0 psf, wind BC DL=5.0 psf. GCpi(+/-)=0.18

Wind loads and reactions based on MWFRS with additional C&C member design.

These support conditions used at bearings indicated
(H1) = Simpson LUS24 w/ (1)2x4 SP #1 supporting member.
(4) 0.148"x3" nails into supporting member.
(2) 0.148"x3" nails into supported member.

Deflection meets L/240 live and L/180 total load. Creep increase factor for dead load is 1.50.

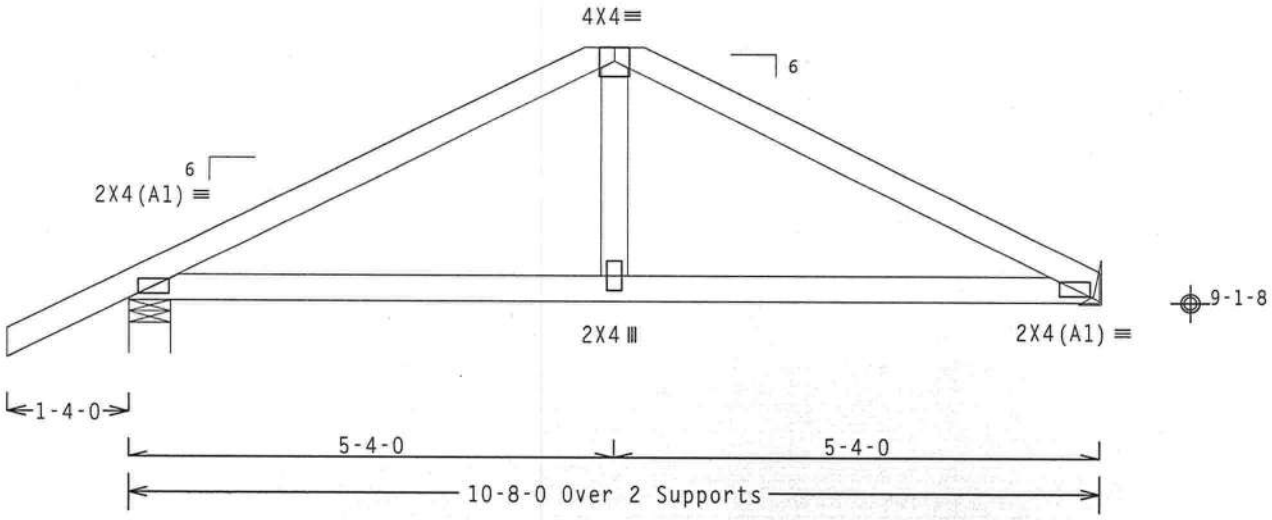

R=754 U=97 W=5.5"

[illegible] U=68 H=Simpson LUS24
Supporting Member Face: (2) 0.148"x3" nails
Supported Member Face: (4) 0.148"x3" nails
Supported Member : (1) 2x4 SP #1

PLT TYP. Wave

Design Crit: FBC2010Res/TPI-2007(STD)
FT/RT=20%(0%)/0(0)

10/03. [illegible] QTY. FL/-/4/-/-/R/- Scale =.5"/Ft.

ALPINE
ITW Building Components Group Inc.
Haines City, FL 33844
FL COA #0 278

WARNING READ AND FOLLOW ALL NOTES ON THIS SHEET!
IMPORTANT FURNISH THIS DESIGN TO ALL CONTRACTORS INCLUDING INSTALLERS.

Trusses require extreme care in fabricating, handling, shipping, installing and bracing. Refer to and follow the latest edition of BCSI (Building Component Safety Information, by TPI and WTCA) for safety practices prior to performing these functions. Installers shall provide temporary bracing per BCSI. Unless noted otherwise, top chord shall have properly attached structural sheathing and bottom chord shall have a properly attached rigid ceiling. Locations shown for permanent lateral restraint of webs shall have bracing installed per BCSI sections B3, B7 or B10, as applicable.

ITW Building Components Group Inc. (ITWBCG) shall not be responsible for any deviation from this design, any failure to build the truss in conformance with ANSI/TPI 1, or for handling, shipping, installing and permanent bracing of trusses. Apply plates to each face of truss and position as shown above and on the Joint Location Details, unless noted otherwise. Refer to drawings 160A-Z for standard plate positions. A seal on this drawing or cover page listing this drawing, indicates acceptance of professional engineering responsibility solely for the design shown. The suitability and use of this design for any structure is the responsibility of the Building Designer per ANSI/TPI 1 Sec.2. For more information see: This job's general notes page; ITW-BCG: www.itwbcg.com; TPI: www.tpinst.org; WTCA: www.sbcindustry.com; ICC: www.iccsafe.org

WALTER P. RINN LICENSE No. 22839 STATE OF FLORIDA PROFESSIONAL ENGINEER

05/16/2012

TC LL	20.0 PSF	REF R487-- 81743
TC DL	10.0 PSF	DATE 05/16/12
BC DL	10.0 PSF	DRW HCUSR487 12137049
BC LL	0.0 PSF	HC-ENG JB/WPF
TOT.LD.	40.0 PSF	SEQN- 96052
DUR.FAC.	1.25	
SPACING	24.0"	JREF- 1UM4487_Z03

(12-089--BRYAN ZECHER Garrison Res. -- , ** - E 9'9" Common)

THIS DWG PREPARED FROM COMPUTER INPUT (LOADS & DIMENSIONS) SUBMITTED BY TRUSS MFR.

Top chord 2x4 SP #1
Bot chord 2x4 SP #1
Webs 2x4 SP #3

Left end vertical not exposed to wind pressure.

Roof overhang supports 2.00 psf soffit load.

These support conditions used at bearings indicated
(H1) = Simpson LUS24 w/ (1)2x4 SP #1 supporting member.
(4) 0.148"x3" nails into supporting member.
(2) 0.148"x3" nails into supported member.

Bottom chord checked for 10.00 psf non-concurrent live load.

Deflection meets L/240 live and L/180 total load. Creep increase factor for dead load is 1.50.

120 mph wind, 15.00 ft mean hgt, ASCE 7-10, CLOSED bldg, not located within 4.50 ft from roof edge, RISK CAT II, EXP C, wind TC DL=5.0 psf, wind BC DL=5.0 psf. GCpi(+/-)=0.18

Wind loads and reactions based on MWFRS with additional C&C member design.

H = recommended connection based on manufacturer tested capacities and calculations. Conditions may exist that require different connections than indicated. Refer to manufacturer publication for additional information.

In lieu of structural panels use purlins to brace all flat TC @ 24" OC.

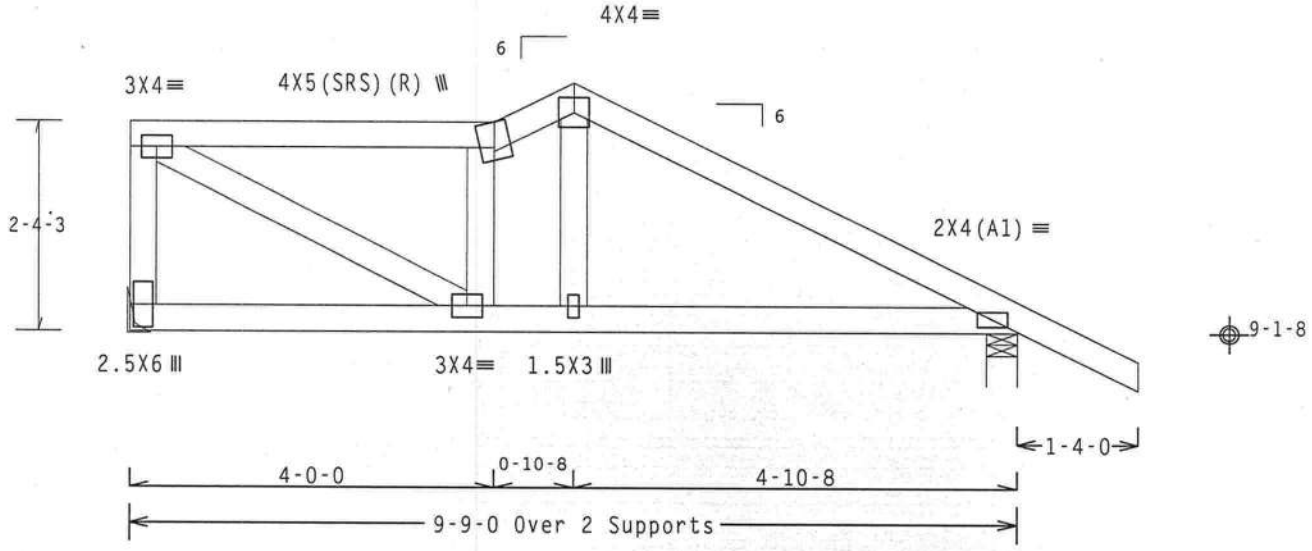

R=388 U=50
RL=38/-65 H=Simpson LUS24
Supported Member Face: (2) 0.148"x3" nails
Supporting Member Face: (4) 0.148"x3" nails
Supporting Member : (1) 2x4 SP #1

Design Crit: FBC2010Res/TPI-2007(STD) FT/RT=20%(0%)/0(0) 10/03.1 QTY:

PLT TYP. Wave

FL/-/4/-/-/R/-

Scale =.5"/Ft.

TC LL	20.0 PSF	REF R487-- 81744
TC DL	10.0 PSF	DATE 05/16/12
BC DL	10.0 PSF	DRW HCUSR487 12137025
BC LL	0.0 PSF	HC-ENG JB/WPF
TOT.LD.	40.0 PSF	SEQN- 95273
DUR.FAC.	1.25	
SPACING	24.0"	JREF- 1UM4487_Z03

ALPINE
ITW Building Components Group Inc.
Haines City, FL 33844
FL COA #0 278

WARNING READ AND FOLLOW ALL NOTES ON THIS SHEET!
IMPORTANT FURNISH THIS DESIGN TO ALL CONTRACTORS INCLUDING INSTALLERS.

Trusses require extreme care in fabricating, handling, shipping, installing and bracing. Refer to and follow the latest edition of BCSI (Building Component Safety Information, by TPI and WTCA) for safety practices prior to performing these functions. Installers shall provide temporary bracing per BCSI. Unless noted otherwise, top chord shall have properly attached structural sheathing and bottom chord shall have a properly attached rigid ceiling. Locations shown for permanent lateral restraint of webs shall have bracing installed per BCSI sections B3, B7 or B10, as applicable.

ITW Building Components Group Inc. (ITWBCG) shall not be responsible for any deviation from this design, any failure to build the truss in conformance with ANSI/TPI 1, or for handling, shipping, installation and bracing of trusses. Apply plates to each face of truss and position as shown above and on the Joint Details, unless noted otherwise. Refer to drawings 160A-Z for standard plate positions. A seal on this drawing or cover page listing this drawing, indicates acceptance of professional engineering responsibility solely for the design shown. The suitability and use of this design for any structure is the responsibility of the Building Designer per ANSI/TPI 1 Sec.2. For more information see: This job's general notes page; ITW-BCG: www.itwbcg.com; TPI: www.tpinst.org; WTCA: www.sbcindustry.com; ICC: www.iccsafe.org

WALTER P. FINN LICENSE No. 22839 STATE OF FLORIDA PROFESSIONAL ENGINEER

05/16/2012

THIS DWG PREPARED FROM COMPUTER INPUT (LOADS & DIMENSIONS) SUBMITTED BY TRUSS MFR.

Top chord 2x4 SP #1
Bot chord 2x4 SP #1
Webs 2x4 SP #3

Roof overhang supports 2.00 psf soffit load.

H = recommended connection based on manufacturer tested capacities and calculations. Conditions may exist that require different connections than indicated. Refer to manufacturer publication for additional information.

In lieu of structural panels use purlins to brace all flat TC @ 24" OC.

Left side jacks have 3-0-0 setback with 0-0-0 cant and 1-4-0 overhang.
End jacks have 3-0-0 setback with 0-0-0 cant and 1-4-0 overhang.
Right side jacks have 3-0-0 setback with 0-0-0 cant and 1-4-0 overhang.

120 mph wind, 15.00 ft mean hgt, ASCE 7-10, CLOSED bldg, Located anywhere in roof, RISK CAT II, EXP C, wind TC DL=5.0 psf, wind BC DL=5.0 psf, GCpi(+/-)=0.18

Wind loads and reactions based on MWFRS with additional C&C member design.

These support conditions used at bearings indicated
(H1) = Simpson LUS24 w/ (1)2x4 SP #1 supporting member.
(4) 0.148"x3" nails into supporting member.
(2) 0.148"x3" nails into supported member.

#1 hip supports 3-0-0 jacks with no webs.

Deflection meets L/240 live and L/180 total load. Creep increase factor for dead load is 1.50.

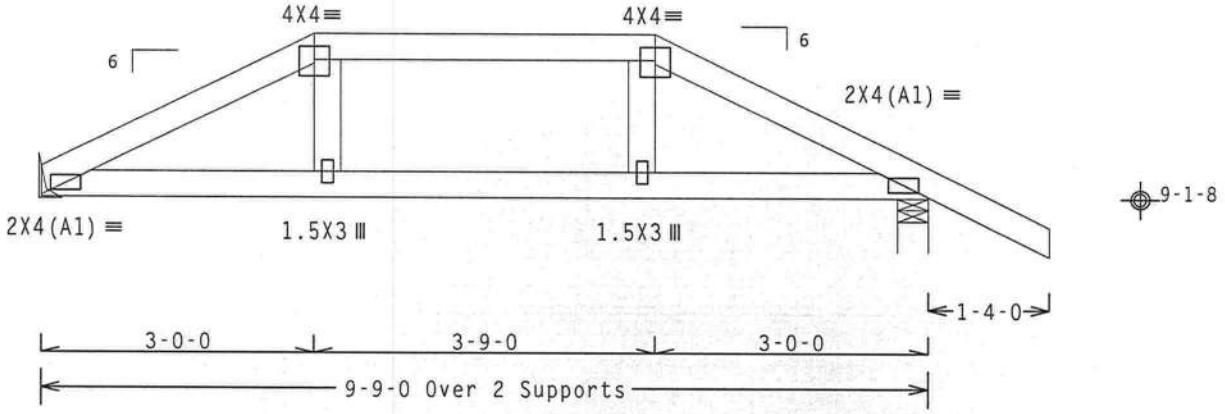

R=438 U=39 H=Simpson LUS24
Supported Member Face: (2) 0.148"x3" nails
Supporting Member Face: (4) 0.148"x3" nails
Supporting Member : (1) 2x4 SP #1

Design Crit: FBC2010Res/TPI-2007(STD) R=545 U=29 H=4"
FT/RT=20%(0%)/0(0) 10.03.11.0209.20 QTY:1 FL/-/4/-/-/R/-

PLT TYP. Wave

Scale =.5"/Ft.

ALPINE
ITW Building Components Group Inc.
Haines City, FL 33844
FL COA #0 278

WARNING READ AND FOLLOW ALL NOTES ON THIS SHEET!
IMPORTANT FURNISH THIS DESIGN TO ALL CONTRACTORS INCLUDING INSTALLERS.

Trusses require extreme care in fabricating, handling, shipping, installing and bracing. Refer to and follow the latest edition of BCSI (Building Component Safety Information, by TPI and WTCA) for safety practices prior to performing these functions. Installers shall provide temporary bracing per BCSI. Unless noted otherwise, top chord shall have properly attached structural sheathing and bottom chord shall have a properly attached rigid ceiling. Locations shown for permanent lateral restraint of webs shall have bracing installed per BCSI sections B3, B7 or B10, as applicable.

ITW Building Components Group Inc. (ITWBCG) shall not be responsible for any deviation from this design, any failure to build the truss in conformance with ANSI/TPI 1, or for handling, shipping, installing and bracing of trusses. Apply plates to each face of truss and position as shown above and on the Joint Details, unless noted otherwise. Refer to drawings 160A-Z for standard plate positions. A seal on this drawing or cover page listing this drawing, indicates acceptance of professional engineering responsibility solely for the design shown. The suitability and use of this design for any structure is the responsibility of the Building Designer per ANSI/TPI 1 Sec.2. For more information see: This job's general notes page; ITW-BCG: www.itwbcg.com; TPI: www.tpinst.org; WTCA: www.sbcindustry.com; ICC: www.iccsafe.org

WALTER R. FINN LICENSE No.22839 STATE OF FLORIDA PROFESSIONAL ENGINEER

05/16/2012

TC LL	20.0 PSF	REF	R487-- 81745
TC DL	10.0 PSF	DATE	05/16/12
BC DL	10.0 PSF	DRW	HCUSR487 12137050
BC LL	0.0 PSF	HC-ENG	JB/WPF
TOT.LD.	40.0 PSF	SEQN-	95461
DUR.FAC.	1.25		
SPACING	24.0"	JREF-	1UM4487_Z03

(12-089--BRYAN ZECHER Garrison Res. -- , ** - F5H 17'2" Flat Girder)

Top chord 2x4 SP #1
Bot chord 2x4 SP #1
Webs 2x4 SP #3

End verticals not exposed to wind pressure.

Girder supports 5-0-0 span to TC/BC split one face and 2-0-0 span to TC/BC split opposite face.

Truss must be installed as shown with top chord up.

120 mph wind, 15.00 ft mean hgt, ASCE 7-10, CLOSED bldg, Located anywhere in roof, RISK CAT II, EXP C, wind TC DL=5.0 psf, wind BC DL=5.0 psf. GCpi(+/-)=0.18

Wind loads and reactions based on MWFRS with additional C&C member design.

Deflection meets L/240 live and L/180 total load. Creep increase factor for dead load is 1.50.

The TC of this truss shall be braced with attached spans at 24" OC in lieu of structural sheathing.

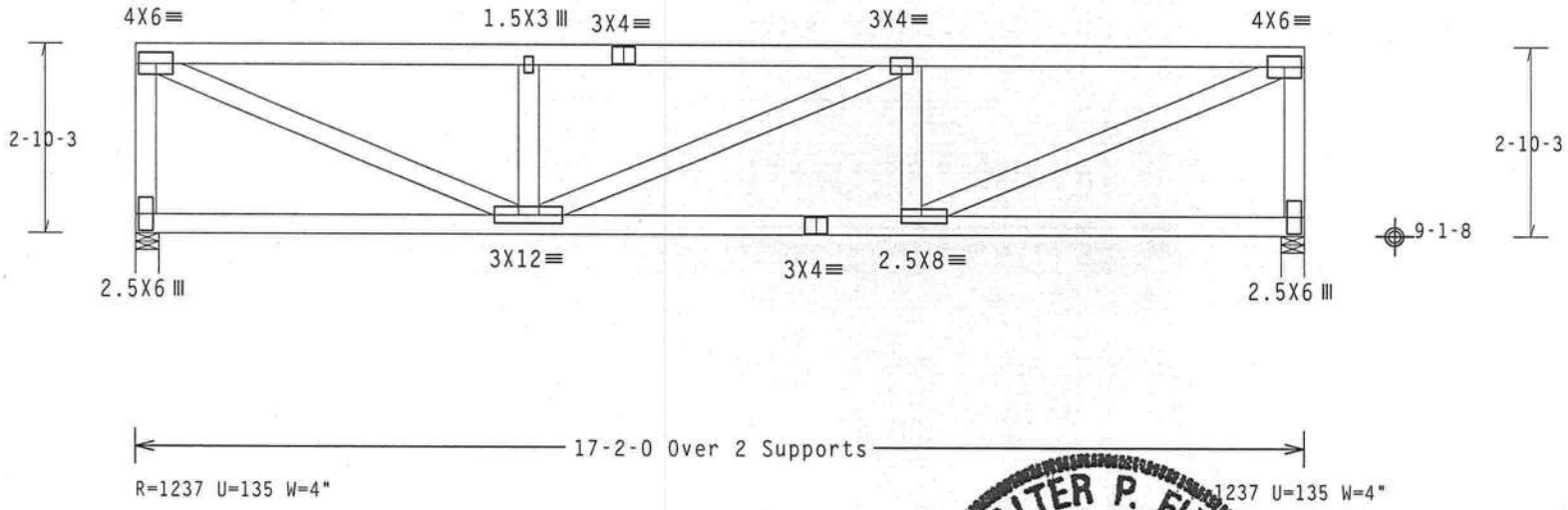

Design Crit: FBC2010Res/TPI-2007(STD)
FT/RT=20%(0%)/0(0)

PLT TYP. Wave

10/03/11 0300-20 QTY 1 FL/-/4/-/-/R/- Scale =.375"/Ft.

ALPINE
ITW Building Components Group Inc.
Haines City, FL 33844
FL COA #0 278

WARNING READ AND FOLLOW ALL NOTES ON THIS SHEET!
IMPORTANT FURNISH THIS DESIGN TO ALL CONTRACTORS INCLUDING INSTALLERS.

Trusses require extreme care in fabricating, handling, shipping, installing and bracing. Refer to and follow the latest edition of BCSI (Building Component Safety Information, by TPI and WTCA) for safety practices prior to performing these functions. Installers shall provide temporary bracing per BCSI. Unless noted otherwise, top chord shall have properly attached structural sheathing and bottom chord shall have a properly attached rigid ceiling. Locations shown for permanent lateral restraint of webs shall have bracing installed per BCSI sections B3, B7 or B10, as applicable.

ITW Building Components Group Inc. (ITWBCG) shall not be responsible for any deviation from this design, any failure to build the truss in conformance with ANSI/TPI 1, or for handling, shipping, installing and bracing of trusses. Apply plates to each face of truss and position as shown above and on the Joint Details, unless noted otherwise. Refer to drawings 160A-Z for standard plate positions. A seal on this drawing or cover page listing this drawing, indicates acceptance of professional engineering responsibility solely for the design shown. The suitability and use of this design for any structure is the responsibility of the Building Designer per ANSI/TPI 1 Sec.2. For more information see: This job's general notes page; ITW-BCG: www.itwbcg.com; TPI: www.tpinst.org; WTCA: www.sbcindustry.com; ICC: www.iccsafe.org

WALTER P. FINN
LICENSE
No.22839
STATE OF FLORIDA
PROFESSIONAL ENGINEER

05/16/2012

TC LL	20.0 PSF	REF	R487-- 81746
TC DL	10.0 PSF	DATE	05/16/12
BC DL	10.0 PSF	DRW	HCUSR487 12137051
BC LL	0.0 PSF	HC-ENG	JB/WPF
TOT.LD.	40.0 PSF	SEQN-	95284
DUR.FAC.	1.25		
SPACING	24.0"	JREF-	1UM4487_Z03

Top chord 2x4 SP #1
Bot chord 2x6 SP M-26
Webs 2x4 SP #3 :W1, W4, W14, W17 2x4 SP #1:
:W2, W16 2x6 SP #2:

Special loads
------(Lumber Dur.Fac.=1.25 / Plate Dur.Fac.=1.25)
TC- From 60 plf at 0.00 to 60 plf at 17.17
BC- From 10 plf at 0.00 to 10 plf at 17.17
BC- 1523.80 lb Conc. Load at 0.44, 2.44,10.44,12.44
14.44,16.44
BC- 1416.19 lb Conc. Load at 4.44, 6.44, 8.44

Wind loads and reactions based on MWFRS with additional C&C member design.

Max JT VERT DEFL: LL: 0.17" DL: 0.25" recommended camber 3/8"

Bottom chord checked for 10.00 psf non-concurrent live load.

Truss must be installed as shown with top chord up.

The TC of this truss shall be braced with attached spans at 24" OC in lieu of structural sheathing.

Trusses or components connecting to this girder have been modified by the truss designer. The loading for this girder requires verification for accuracy.

Brg blocks:0.131"x3", min. nails

brg	x-loc	#blocks	length/blk	#nails/blk	wall plate
1	0.000'	1	17"	21	Rigid Surface
2	16.833'	1	15"	19	Rigid Surface

Brg block to be same size and species as chord.
Refer to drawing CNNAILSP0109 for more information.

120 mph wind, 15.00 ft mean hgt, ASCE 7-10, CLOSED bldg, Located anywhere in roof, RISK CAT II, EXP C, wind TC DL=5.0 psf, wind BC DL=5.0 psf. GCpi(+/-)=0.18

End verticals not exposed to wind pressure.

(a) Continuous lateral bracing equally spaced on member.

Deflection meets L/240 live and L/180 total load. Creep increase factor for dead load is 1.50.

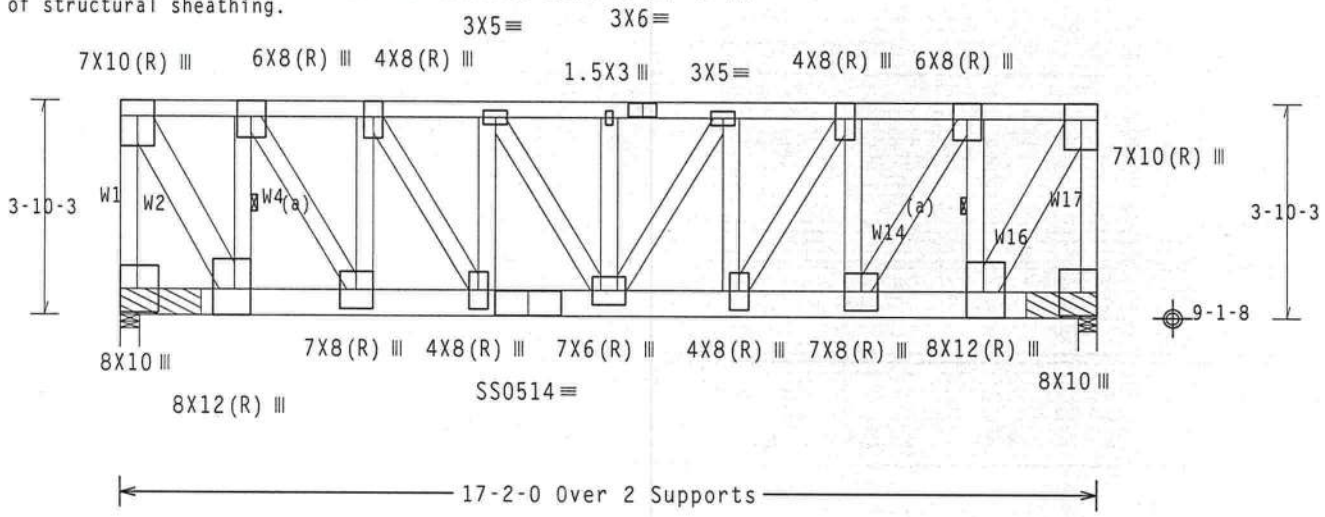

R=7373 U=937 W=4"

Design Crit: FBC2010Res/TPI-2007(STD)
FT/RT=20%(0%)/0(0)

PLT TYP. 18 Gauge HS,Wave

10.03.1 QTY:

FL/-/4/-/-/R/-

Scale =.3125"/Ft.

ALPINE
ITW Building Components Group Inc.
Haines City, FL 33844
FL COA #0 278

WARNING READ AND FOLLOW ALL NOTES ON THIS SHEET!
IMPORTANT FURNISH THIS DESIGN TO ALL CONTRACTORS INCLUDING INSTALLERS.

Trusses require extreme care in fabricating, handling, shipping, installing and bracing. Refer to and follow the latest edition of BCSI (Building Component Safety Information, by TPI and WTCA) for safety practices prior to performing these functions. Installers shall provide temporary bracing per BCSI. Unless noted otherwise, top chord shall have properly attached structural sheathing and bottom chord shall have a properly attached rigid ceiling. Locations shown for permanent lateral restraint of webs shall have bracing installed per BCSI sections B3, B7 or B10, as applicable.

ITW Building Components Group Inc. (ITWBCG) shall not be responsible for any deviation from this design, any failure to build the truss in conformance with ANSI/TPI 1, or for handling, shipping, installation and bracing of trusses. Apply plates to each face of truss and position as shown above and on the Joint Details, unless noted otherwise. Refer to drawings 160A-Z for standard plate positions. A seal on this drawing or cover page listing this drawing, indicates acceptance of professional engineering responsibility solely for the design shown. The suitability and use of this design for any structure is the responsibility of the Building Designer per ANSI/TPI 1 Sec.2. For more information see: This job's general notes page; ITW-BCG: www.itwbcg.com; TPI: www.tpinst.org; WTCA: www.sbcindustry.com; ICC: www.iccsafe.org

WALTER R. FINN LICENSE No. 22849 STATE OF FLORIDA PROFESSIONAL ENGINEER
05/16/2012

TC LL	20.0 PSF	REF R487-- 81747
TC DL	10.0 PSF	DATE 05/16/12
BC DL	10.0 PSF	DRW HCUSR487 12137052
BC LL	0.0 PSF	HC-ENG JB/WPF
TOT.LD.	40.0 PSF	SEQN- 96055
DUR.FAC.	1.25	
SPACING	24.0"	JREF- 1UM4487_Z03

(12-089--BRYAN ZECHER Garrison Res. -- , ** - H5G 10'11" Stepdown Hip Girder)

THIS DWG PREPARED FROM COMPUTER INPUT (LOADS & DIMENSIONS) SUBMITTED BY TRUSS MFR.

Top chord 2x4 SP #1
Bot chord 2x4 SP #1
Webs 2x4 SP #3

End verticals not exposed to wind pressure.

Left and right cantilevers are not exposed to wind

In lieu of structural panels use purlins to brace all flat TC @ 24" OC.

Left side jacks have 5-0-0 setback with 1-8-0 cant and 1-4-0 overhang.
End jacks have 5-0-0 setback with 1-8-0 cant and 1-4-0 overhang.
Right side jacks have 5-0-0 setback with 1-8-0 cant and 1-4-0 overhang.

120 mph wind, 15.00 ft mean hgt, ASCE 7-10, CLOSED bldg, Located anywhere in roof, RISK CAT II, EXP C, wind TC DL=5.0 psf, wind BC DL=5.0 psf. GCpi(+/-)=0.18

Wind loads and reactions based on MWFRS with additional C&C member design.

Roof overhang supports 2.00 psf soffit load.

#1 hip supports 5-0-0 jacks to BC.

Deflection meets L/240 live and L/180 total load. Creep increase factor for dead load is 1.50.

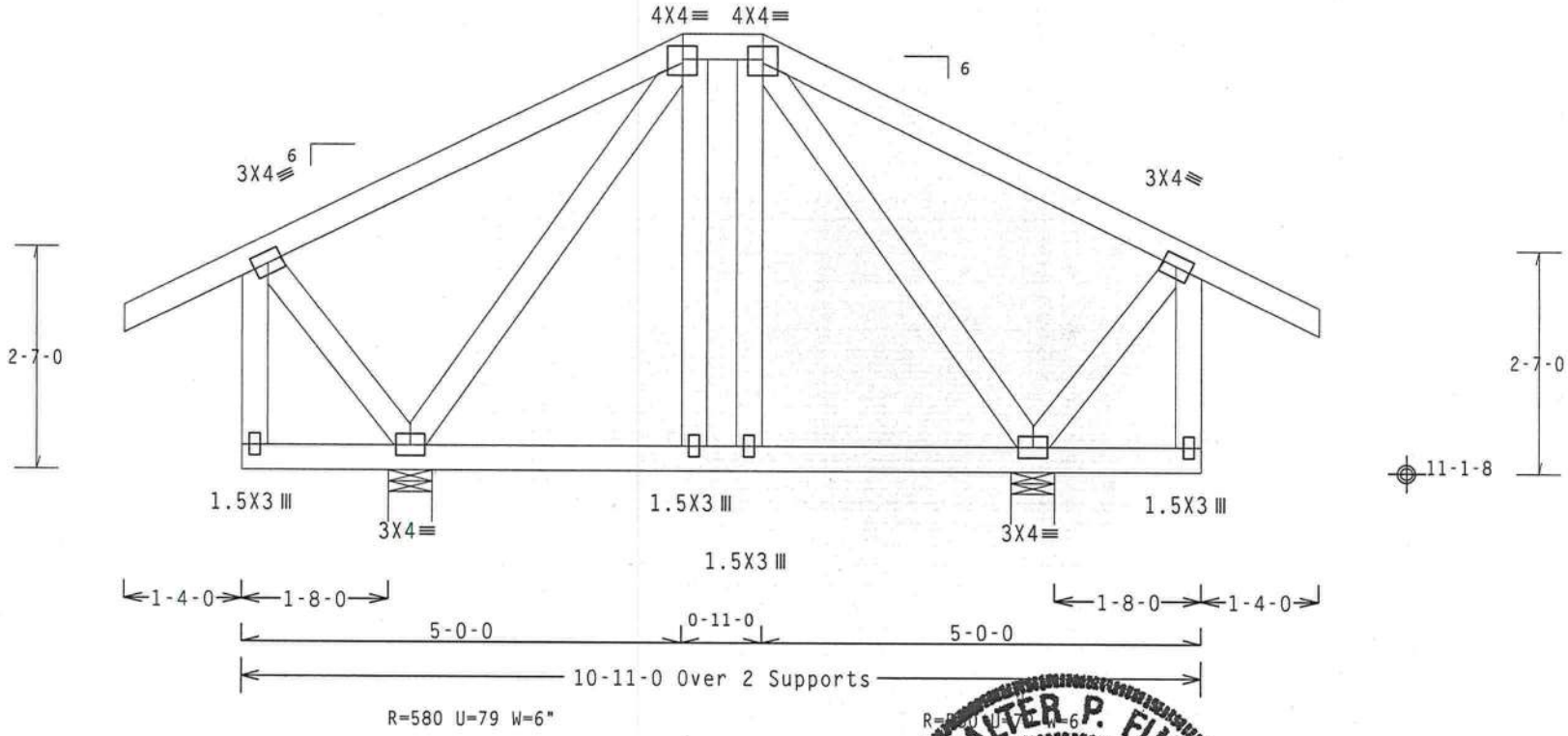

Design Crit: FBC2010Res/TPI-2007(STD)
FT/RT=20%(0%)/0(0)

PLT TYP. Wave

10.03.1 QTY:

FL/-/4/-/-/R/-

Scale =.5"/Ft.

TC LL	20.0 PSF	REF R487-- 81748
TC DL	10.0 PSF	DATE 05/16/12
BC DL	10.0 PSF	DRW HCUSR487 12137063
BC LL	0.0 PSF	HC-ENG JB/WPF
TOT.LD.	40.0 PSF	SEQN- 95349
DUR.FAC.	1.25	
SPACING	24.0"	JREF- 1UM4487_Z03

ALPINE
ITW Building Components Group Inc.
Haines City, FL 33844
FL COA #0 278

WARNING READ AND FOLLOW ALL NOTES ON THIS SHEET!
IMPORTANT FURNISH THIS DESIGN TO ALL CONTRACTORS INCLUDING INSTALLERS.

Trusses require extreme care in fabricating, handling, shipping, installing and bracing. Refer to and follow the latest edition of BCSI (Building Component Safety Information, by TPI and WTCA) for safety practices prior to performing these functions. Installers shall provide temporary bracing per BCSI. Unless noted otherwise, top chord shall have properly attached structural sheathing and bottom chord shall have a properly attached rigid ceiling. Locations shown for permanent lateral restraint of webs shall have bracing installed per BCSI sections B3, B7 or B10, as applicable.

ITW Building Components Group Inc. (ITWBCG) shall not be responsible for any deviation from this design, any failure to build the truss in conformance with ANSI/TPI 1, or for handling, shipping, installation and bracing of trusses. Apply plates to each face of truss and position as shown above and on the Joint Details, unless noted otherwise. Refer to drawings 160A-Z for standard plate positions. A seal on this drawing or cover page listing this drawing, indicates acceptance of professional engineering responsibility solely for the design shown. The suitability and use of this design for any structure is the responsibility of the Building Designer per ANSI/TPI 1 Sec.2. For more information see: This job's general notes page; ITW-BCG: www.itwbcg.com; TPI: www.tpinst.org; WTCA: www.sbcindustry.com; ICC: www.iccsafe.org

WALTER P. FINN
LICENSE
No 22839
STATE OF FLORIDA
PROFESSIONAL ENGINEER

05/16/2012

(12-089--BRYAN ZECHER Garrison Res. -- , ** - CJ1 1' Jack)

Top chord 2x4 SP #1
Bot chord 2x4 SP #1

Roof overhang supports 2.00 psf soffit load.

Bottom chord checked for 10.00 psf non-concurrent live load.

Deflection meets L/240 live and L/180 total load. Creep increase factor for dead load is 1.50.

120 mph wind, 15.00 ft mean hgt, ASCE 7-10, CLOSED bldg, Located anywhere in roof, RISK CAT II, EXP C, wind TC DL=5.0 psf, wind BC DL=5.0 psf. GCpi(+/-)=0.18

Wind loads and reactions based on MWFRS with additional C&C member design.

Provide (2) 16d common nails(0.162"x3.5"), toe nailed at Top chord.
Provide (2) 16d common nails(0.162"x3.5"), toe nailed at Bot chord.

R=-56 Rw=27 U=51

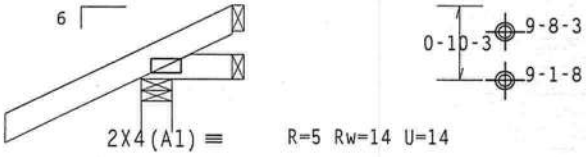

R=5 Rw=14 U=14

1-6-0
1-0-0 Over 3 Supports

R=254 U=54 W=4"
RL=30/-23

Design Crit: FBC2010Res/TPI-2007(STD)
FT/RT=20%(0%)/0(0) 10.03.11.0209.20 QTY 2 FL/-/4/-/-/R/- Scale =.5"/Ft.

PLT TYP. Wave

ALPINE
ITW Building Components Group Inc.
Haines City, FL 33844
FL COA #0 278

WARNING READ AND FOLLOW ALL NOTES ON THIS SHEET!
IMPORTANT FURNISH THIS DESIGN TO ALL CONTRACTORS INCLUDING INSTALLERS.

Trusses require extreme care in fabricating, handling, shipping, installing and bracing. Refer to and follow the latest edition of BCSI (Building Component Safety Information, by TPI and WTCA) for good practices prior to performing these functions. Installers shall provide temporary bracing per BCSI. Unless noted otherwise, top chord shall have properly attached structural sheathing and bottom chord shall have a properly attached rigid ceiling. Locations shown for permanent lateral restraint of webs shall have bracing installed per BCSI sections B3, B7 or B10, as applicable.

ITW Building Components Group Inc. (ITWBCG) shall not be responsible for any deviation from this design, any failure to build the truss in conformance with ANSI/TPI 1, or for handling, shipping, installing and bracing of trusses. Apply plates to each face of truss and position as shown above and on the Joint Details, unless noted otherwise. Refer to drawings 160A-Z for standard plate positions. A seal on this drawing or cover page listing this drawing, indicates acceptance of professional engineering responsibility solely for the design shown. The suitability and use of this design for any structure is the responsibility of the Building Designer per ANSI/TPI 1 Sec.2. For more information see: This job's general notes page; ITW-BCG: www.itwbcg.com; TPI: www.tpinst.org; WTCA: www.sbcindustry.com; ICC: www.iccsafe.org

WALTER P. FINN LICENSE No. 22839 STATE OF FLORIDA PROFESSIONAL ENGINEER

05/16/2012

TC LL	20.0 PSF	REF R487-- 81749
TC DL	10.0 PSF	DATE 05/16/12
BC DL	10.0 PSF	DRW HCUSR487 12137026
BC LL	0.0 PSF	HC-ENG JB/WPF
TOT.LD.	40.0 PSF	SEQN- 95048
DUR.FAC.	1.25	
SPACING	24.0"	JREF- 1UM4487_Z03

Top chord 2x4 SP #1
Bot chord 2x4 SP #1

Roof overhang supports 2.00 psf soffit load.

Bottom chord checked for 10.00 psf non-concurrent live load.

Deflection meets L/240 live and L/180 total load. Creep increase factor for dead load is 1.50.

120 mph wind, 15.00 ft mean hgt, ASCE 7-10, CLOSED bldg, Located anywhere in roof, RISK CAT II, EXP C, wind TC DL=5.0 psf, wind BC DL=5.0 psf. GCpi(+/-)=0.18

Wind loads and reactions based on MWFRS with additional C&C member design.

Provide (2) 16d common nails(0.162"x3.5"), toe nailed at Top chord.
Provide (2) 16d common nails(0.162"x3.5"), toe nailed at Bot chord.

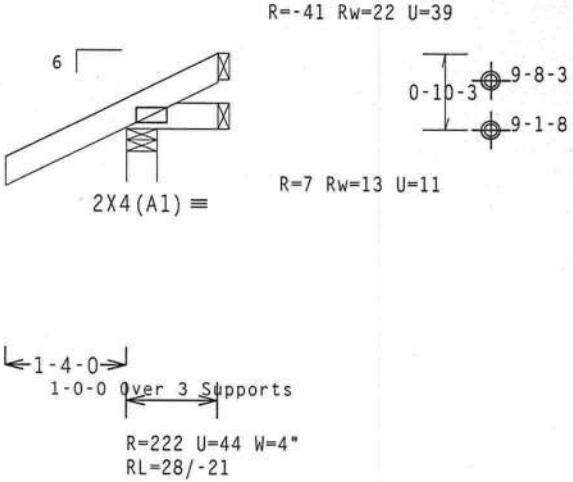

Design Crit: FBC2010Res/TPI-2007(STD) 10.03.11.0209.00 QTY 16 FL/-/4/-/-/R/-

PLT TYP. Wave

FT/RT=20%(0%)/0(0)

Scale =.5"/Ft.

ALPINE
ITW Building Components Group Inc.
Haines City, FL 33844
FL COA #0 278

WARNING READ AND FOLLOW ALL NOTES ON THIS SHEET!
IMPORTANT FURNISH THIS DESIGN TO ALL CONTRACTORS INCLUDING INSTALLERS.

Trusses require extreme care in fabricating, handling, shipping, installing and bracing. Refer to and follow the latest edition of BCSI (Building Component Safety Information, by TPI and WTCA) for safety practices prior to performing these functions. Installers shall provide temporary bracing per BCSI. Unless noted otherwise, top chord shall have properly attached structural sheathing and bottom chord shall have a properly attached rigid ceiling. Locations shown for permanent lateral restraint of webs shall have bracing installed per BCSI sections B3, B7 or B10, as applicable.

ITW Building Components Group Inc. (ITWBCG) shall not be responsible for any deviation from this design, any failure to build the truss in conformance with ANSI/TPI 1, or for handling, shipping, installing and bracing of trusses. Apply plates to each face of truss and position as shown above and on the Joint Details, unless noted otherwise. Refer to drawings 160A-Z for standard plate positions. A seal on this drawing or cover page listing this drawing, indicates acceptance of professional engineering responsibility solely for the design shown. The suitability and use of this design for any structure is the responsibility of the Building Designer per ANSI/TPI 1 Sec.2. For more information see: This job's general notes page; ITW-BCG: www.itwbcg.com; TPI: www.tpinst.org; WTCA: www.sbcindustry.com; ICC: www.iccsafe.org

WALTER P. FINN
LICENSE
No.22839
STATE OF FLORIDA
PROFESSIONAL ENGINEER
05/16/2012

TC LL	20.0 PSF	REF	R487-- 81750
TC DL	10.0 PSF	DATE	05/16/12
BC DL	10.0 PSF	DRW	HCUSR487 12137027
BC LL	0.0 PSF	HC-ENG	JB/WPF
TOT.LD.	40.0 PSF	SEQN-	95217
DUR.FAC.	1.25		
SPACING	24.0"	JREF-	1UM4487_Z03

(12-089--BRYAN ZECHER Garrison Res. -- , ** - CJ1S 1' Jack)

Top chord 2x4 SP #1
Bot chord 2x4 SP #1
Webs 2x4 SP #3

Left end vertical exposed to wind pressure. Deflection meets L/240 criteria for brittle and flexible wall coverings.

Roof overhang supports 2.00 psf soffit load.

Deflection meets L/240 live and L/180 total load. Creep increase factor for dead load is 1.50.

120 mph wind, 15.00 ft mean hgt, ASCE 7-10, CLOSED bldg, Located anywhere in roof, RISK CAT II, EXP C, wind TC DL=5.0 psf, wind BC DL=5.0 psf. GCpi(+/-)=0.18

Wind loads and reactions based on MWFRS with additional C&C member design.

Bottom chord checked for 10.00 psf non-concurrent live load.

Provide (2) 16d common nails(0.162"x3.5"), toe nailed at Top chord.
Provide (2) 16d common nails(0.162"x3.5"), toe nailed at Bot chord.

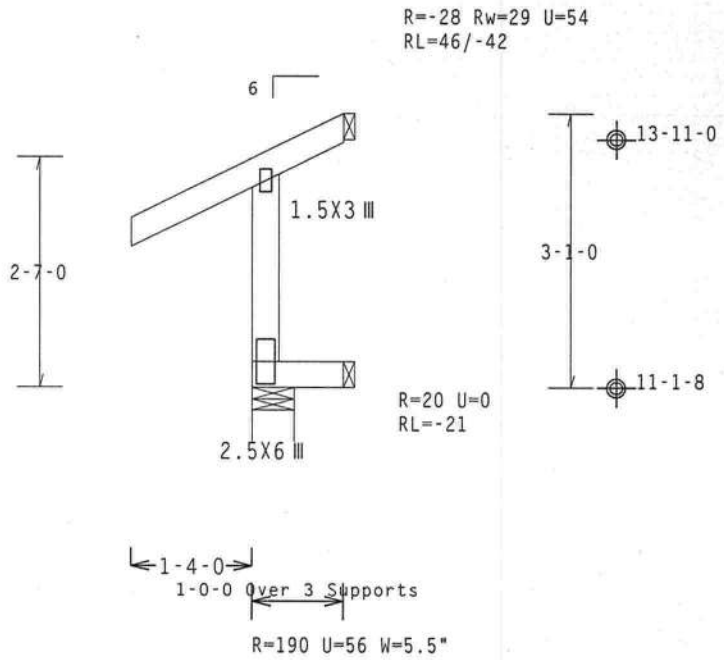

Design Crit: FBC2010Res/TPI-2007(STD)
FT/RT=20%(0%)/0(0)

PLT TYP. Wave

10.03.02 QTY: 1

FL/-/4/-/-/R/-

Scale =.5"/Ft.

ALPINE
ITW Building Components Group Inc.
Haines City, FL 33844
FL COA #0 278

WARNING READ AND FOLLOW ALL NOTES ON THIS SHEET!
IMPORTANT FURNISH THIS DESIGN TO ALL CONTRACTORS INCLUDING INSTALLERS.

Trusses require extreme care in fabricating, handling, shipping, installing and bracing. Refer to and follow the latest edition of BCSI (Building Component Safety Information, by TPI and WTCA) for safety practices prior to performing these functions. Installers shall provide temporary bracing per BCSI. Unless noted otherwise, top chord shall have properly attached structural sheathing and bottom chord shall have a properly attached rigid ceiling. Locations shown for permanent lateral restraint of webs shall have bracing installed per BCSI sections B3, B7 or B10, as applicable.

ITW Building Components Group Inc. (ITWBCG) shall not be responsible for any deviation from this design, any failure to build the truss in conformance with ANSI/TPI 1, or for handling, shipping, installation and bracing of trusses. Apply plates to each face of truss and position as shown above and on the Joint Details, unless noted otherwise. Refer to drawings 160A-Z for standard plate positions. A seal on this drawing or cover page listing this drawing, indicates acceptance of professional engineering responsibility solely for the design shown. The suitability and use of this design for any structure is the responsibility of the Building Designer per ANSI/TPI 1 Sec.2. For more information see: This job's general notes page; ITW-BCG: www.itwbcg.com; TPI: www.tpinst.org; WTCA: www.sbcindustry.com; ICC: www.iccsafe.org

WALTER P. FINN LICENSE No. 22839 STATE OF FLORIDA PROFESSIONAL ENGINEER
05/16/2012

TC LL	20.0 PSF	REF R487-- 81751
TC DL	10.0 PSF	DATE 05/16/12
BC DL	10.0 PSF	DRW HCUSR487 12137028
BC LL	0.0 PSF	HC-ENG JB/WPF
TOT.LD.	40.0 PSF	SEQN- 95332
DUR.FAC.	1.25	
SPACING	24.0"	JREF- 1UM4487_Z03

(12-089--BRYAN ZECHER Garrison Res. -- , ** - CJ3 3' Jack)

THIS DWG PREPARED FROM COMPUTER INPUT (LOADS & DIMENSIONS) SUBMITTED BY TRUSS MFR.

Top chord 2x4 SP #1
Bot chord 2x4 SP #1

Roof overhang supports 2.00 psf soffit load.

Bottom chord checked for 10.00 psf non-concurrent live load.

Deflection meets L/240 live and L/180 total load. Creep increase factor for dead load is 1.50.

120 mph wind, 15.00 ft mean hgt, ASCE 7-10, CLOSED bldg, Located anywhere in roof, RISK CAT II, EXP C, wind TC DL=5.0 psf, wind BC DL=5.0 psf. GCpi(+/-)=0.18

Wind loads and reactions based on MWFRS with additional C&C member design.

Provide (2) 16d common nails(0.162"x3.5"), toe nailed at Top chord.
Provide (2) 16d common nails(0.162"x3.5"), toe nailed at Bot chord.

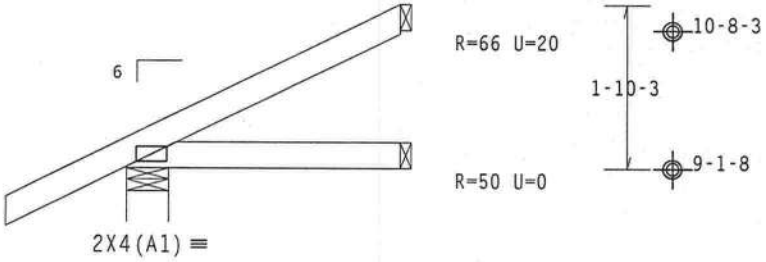

1-4-0

3-0-0 Over 3 Supports

R=244 U=26 W=5.5"
RL=52/-26

Design Crit: FBC2010Res/TPI-2007(STD)

PLT TYP. Wave

FT/RT=20%(0%)/0(0) 10.03.11.0209.80 QTY:13 FL/-/4/-/-/R/- Scale =.5"/Ft.

ALPINE
ITW Building Components Group Inc.
Haines City, FL 33844
FL COA #0 278

WARNING READ AND FOLLOW ALL NOTES ON THIS SHEET!
IMPORTANT FURNISH THIS DESIGN TO ALL CONTRACTORS INCLUDING INSTALLERS.

Trusses require extreme care in fabricating, handling, shipping, installing and bracing. Refer to and follow the latest edition of BCSI (Building Component Safety Information, by TPI and WTCA) for safety practices prior to performing these functions. Installers shall provide temporary bracing per BCSI. Unless noted otherwise, top chord shall have properly attached structural sheathing and bottom chord shall have a properly attached rigid ceiling. Locations shown for permanent lateral restraint of webs shall have bracing installed per BCSI sections B3, B7 or B10, as applicable.

ITW Building Components Group Inc. (ITWBCG) shall not be responsible for any deviation from this design, any failure to build the truss in conformance with ANSI/TPI 1, or for handling, shipping, installing and bracing of trusses. Apply plates to each face of truss and position as shown above and on the Joint Details, unless noted otherwise. Refer to drawings 160A-Z for standard plate positions. A seal on this drawing or cover page listing this drawing, indicates acceptance of professional engineering responsibility solely for the design shown. The suitability and use of this design for any structure is the responsibility of the Building Designer per ANSI/TPI 1 Sec.2. For more information see: This job's general notes page; ITW-BCG: www.itwbcg.com; TPI: www.tpinst.org; WTCA: www.sbcindustry.com; ICC: www.iccsafe.org

WALTER P. FINN
LICENSE
No.22839
STATE OF FLORIDA
PROFESSIONAL ENGINEER

05/16/2012

TC LL	20.0 PSF	REF	R487-- 81752
TC DL	10.0 PSF	DATE	05/16/12
BC DL	10.0 PSF	DRW	HCUSR487 12137029
BC LL	0.0 PSF	HC-ENG	JB/WPF
TOT.LD.	40.0 PSF	SEQN-	95222
DUR.FAC.	1.25		
SPACING	24.0"	JREF-	1UM4487_Z03

(12-089--BRYAN ZECHER Garrison Res. -- , ** - CJ31 3' Jack)

Top chord 2x4 SP #1
Bot chord 2x4 SP #1

H = recommended connection based on manufacturer tested capacities and calculations. Conditions may exist that require different connections than indicated. Refer to manufacturer publication for additional information.

Bottom chord checked for 10.00 psf non-concurrent live load.

Deflection meets L/240 live and L/180 total load. Creep increase factor for dead load is 1.50.

120 mph wind, 15.00 ft mean hgt, ASCE 7-10, CLOSED bldg, Located anywhere in roof, RISK CAT II, EXP C, wind TC DL=5.0 psf, wind BC DL=5.0 psf. GCpi(+/-)=0.18

Wind loads and reactions based on MWFRS with additional C&C member design.

These support conditions used at bearings indicated
(H1) = Simpson LUS24 w/ (1)2x4 SP #1 supporting member.
(4) 0.148"x3" nails into supporting member.
(2) 0.148"x3" nails into supported member.

Provide (2) 16d common nails(0.162"x3.5"), toe nailed at Top chord.
Provide (2) 16d common nails(0.162"x3.5"), toe nailed at Bot chord.

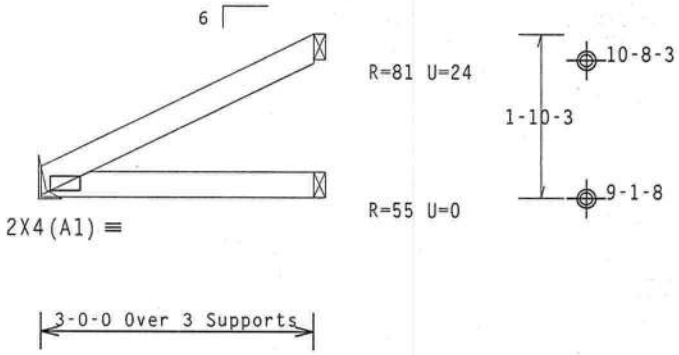

R=129 U=2
RL=36 H=Simpson LUS24
Supported Member Face: (2) 0.148"x3" nails
Supporting Member Face: (4) 0.148"x3" nails
Supporting Member : (1) 2x4 SP #1

Design Crit: FBC2010Res/TPI-2007(STD) 10/03/2011 QTY:
FT/RT=20%(0%)/0(0)

PLT TYP. Wave

FL/-/4/-/-/R/-

Scale =.5"/Ft.

ALPINE
ITW Building Components Group Inc.
Haines City, FL 33844
FL COA #0 278

WARNING READ AND FOLLOW ALL NOTES ON THIS SHEET!
IMPORTANT FURNISH THIS DESIGN TO ALL CONTRACTORS INCLUDING INSTALLERS.

Trusses require extreme care in fabricating, handling, shipping, installing and bracing. Refer to and follow the latest edition of BCSI (Building Component Safety Information, by TPI and WTCA) for safety practices prior to performing these functions. Installers shall provide temporary bracing per BCSI. Unless noted otherwise, top chord shall have properly attached structural sheathing and bottom chord shall have a properly attached rigid ceiling. Locations shown for permanent lateral restraint of webs shall have bracing installed per BCSI sections B3, B7 or B10, as applicable.

ITW Building Components Group Inc. (ITWBCG) shall not be responsible for any deviation from this design, any failure to build the truss in conformance with ANSI/TPI 1, or for handling, shipping, installation and bracing of trusses. Apply plates to each face of truss and position as shown above and on the Joint Details, unless noted otherwise. Refer to drawings 160A-Z for standard plate positions. A seal on this drawing or cover page listing this drawing, indicates acceptance of professional engineering responsibility solely for the design shown. The suitability and use of this design for any structure is the responsibility of the Building Designer per ANSI/TPI 1 Sec.2. For more information see: This job's general notes page: ITW-BCG: www.itwbcg.com; TPI: www.tpinst.org; WTCA: www.sbcindustry.com; ICC: www.iccsafe.org

WALTER P. FINN LICENSE No. 22839 STATE OF FLORIDA PROFESSIONAL ENGINEER
05/16/2012

TC LL	20.0 PSF	REF R487-- 81753
TC DL	10.0 PSF	DATE 05/16/12
BC DL	10.0 PSF	DRW HCUSR487 12137030
BC LL	0.0 PSF	HC-ENG JB/WPF
TOT.LD.	40.0 PSF	SEQN- 95060
DUR.FAC.	1.25	
SPACING	24.0"	JREF- 1UM4487_Z03

(12-089--BRYAN ZECHER Garrison Res. -- , ** - CJ3B 3' Jack)

THIS DWG PREPARED FROM COMPUTER INPUT (LOADS & DIMENSIONS) SUBMITTED BY TRUSS MFR.

Top chord 2x4 SP #1
Bot chord 2x4 SP #1
Webs 2x4 SP #3

In lieu of structural panels use purlins to brace all flat TC @ 24" OC.

Bottom chord checked for 10.00 psf non-concurrent live load.

Fasten rated sheathing to one face of this frame.

120 mph wind, 15.00 ft mean hgt, ASCE 7-10, CLOSED bldg, Located anywhere in roof, RISK CAT II, EXP C, wind TC DL=5.0 psf, wind BC DL=5.0 psf. GCpi(+/-)=0.18

Wind loads and reactions based on MWFRS with additional C&C member design.

Deflection meets L/240 live and L/180 total load. Creep increase factor for dead load is 1.50.

Provide (2) 16d common nails(0.162"x3.5"), toe nailed at Top chord.
Provide (2) 16d common nails(0.162"x3.5"), toe nailed at Bot chord.

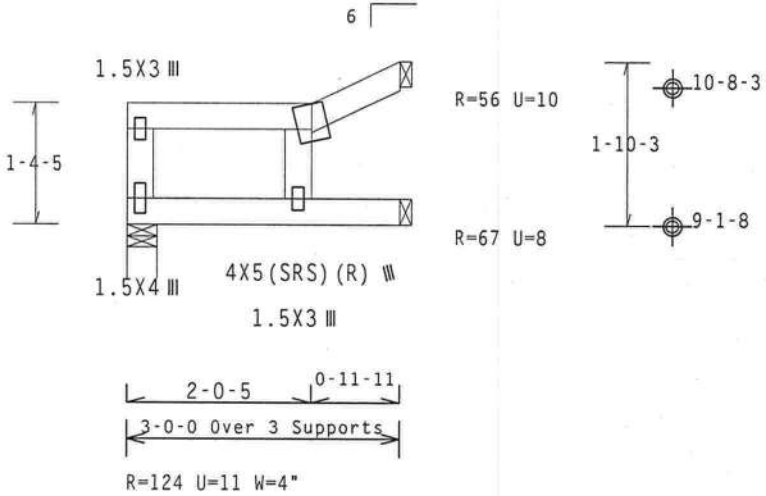

Design Crit: FBC2010Res/TPI-2007(STD) 10.03 11.0209.20 QTY 1 FL/-/4/-/-/R/-

PLT TYP. Wave FT/RT=20%(0%)/0(0)

Scale =.5"/Ft.

ALPINE
ITW Building Components Group Inc.
Haines City, FL 33844
FL COA #0 278

WARNING READ AND FOLLOW ALL NOTES ON THIS SHEET!
IMPORTANT FURNISH THIS DESIGN TO ALL CONTRACTORS INCLUDING INSTALLERS.

Trusses require extreme care in fabricating, handling, shipping, installing and bracing. Refer to and follow the latest edition of BCSI (Building Component Safety Information, by TPI and WTCA) as a guide to good practices prior to performing these functions. Installers shall provide temporary bracing per BCSI. Unless noted otherwise, top chord shall have properly attached structural sheathing and bottom chord shall have a properly attached rigid ceiling. Locations shown for permanent lateral restraint of webs shall have bracing installed per BCSI sections B3, B7 or B10, as applicable.

ITW Building Components Group Inc. (ITWBCG) shall not be responsible for any deviation from this design, any failure to build the truss in conformance with ANSI/TPI 1, or for handling, shipping, installing and bracing of trusses. Apply plates to each face of truss and position as shown above and on the Joint Details, unless noted otherwise. Refer to drawings 160A-Z for standard plate positions. A seal on this drawing or cover page listing this drawing, indicates acceptance of professional engineering responsibility solely for the design shown. The suitability and use of this design for any structure is the responsibility of the Building Designer per ANSI/TPI 1 Sec.2. For more information see: This job's general notes page: ITW-BCG: www.itwbcg.com; TPI: www.tpinst.org; WTCA: www.sbcindustry.com; ICC: www.iccsafe.org

WALTER P. FINN LICENSE No.22839 STATE OF FLORIDA PROFESSIONAL ENGINEER

05/16/2012

TC LL	20.0 PSF	REF	R487-- 81754
TC DL	10.0 PSF	DATE	05/16/12
BC DL	10.0 PSF	DRW	HCUSR487 12137031
BC LL	0.0 PSF	HC-ENG	JB/WPF
TOT.LD.	40.0 PSF	SEQN-	95130
DUR.FAC.	1.25		
SPACING	24.0"	JREF-	1UM4487_Z03

(12-089--BRYAN ZECHER Garrison Res. -- , ** - CJ3S 3' Jack)

THIS DWG PREPARED FROM COMPUTER INPUT (LOADS & DIMENSIONS) SUBMITTED BY TRUSS MFR.

Top chord 2x4 SP #1
Bot chord 2x4 SP #1
Webs 2x4 SP #3

Left end vertical exposed to wind pressure. Deflection meets L/240 criteria for brittle and flexible wall coverings.

Roof overhang supports 2.00 psf soffit load.

Deflection meets L/240 live and L/180 total load. Creep increase factor for dead load is 1.50.

120 mph wind, 15.00 ft mean hgt, ASCE 7-10, CLOSED bldg, Located anywhere in roof, RISK CAT II, EXP C, wind TC DL=5.0 psf, wind BC DL=5.0 psf. GCpi(+/-)=0.18

Wind loads and reactions based on MWFRS with additional C&C member design.

Bottom chord checked for 10.00 psf non-concurrent live load.

Provide (2) 16d common nails(0.162"x3.5"), toe nailed at Top chord.
Provide (2) 16d common nails(0.162"x3.5"), toe nailed at Bot chord.

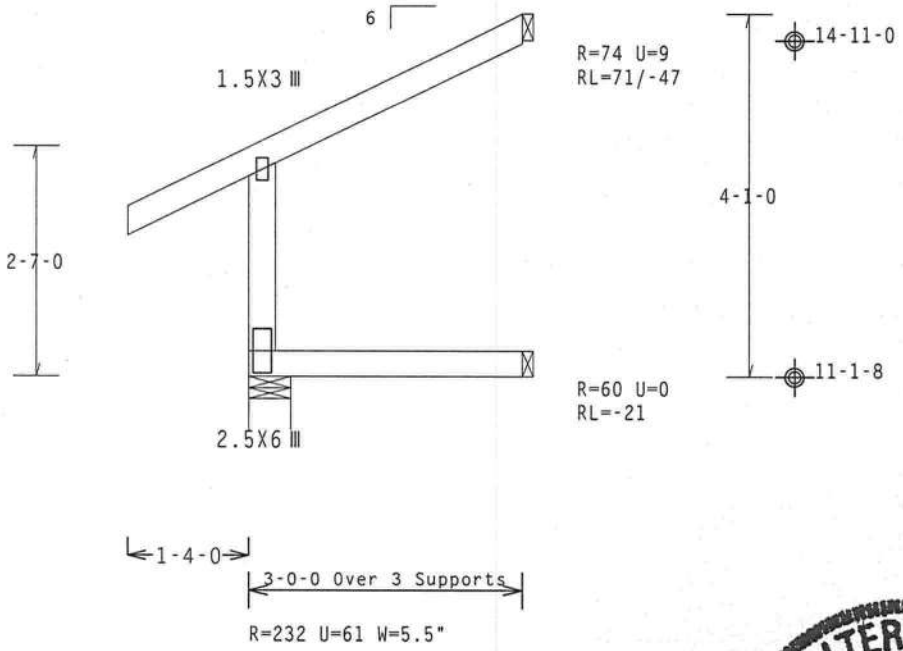

Design Crit: FBC2010Res/TPI-2007(STD)

PLT TYP. Wave | FT/RT=20%(0%)/0(0) | 10.03.11.0309.20 | QTY:2 | FL/-/4/-/-/R/- | Scale =.5"/Ft.

ALPINE
ITW Building Components Group Inc.
Haines City, FL 33844
FL COA #0 278

WARNING READ AND FOLLOW ALL NOTES ON THIS SHEET!
IMPORTANT FURNISH THIS DESIGN TO ALL CONTRACTORS INCLUDING INSTALLERS.

Trusses require extreme care in fabricating, handling, shipping, installing and bracing. Refer to and follow the latest edition of BCSI (Building Component Safety Information, by TPI and WTCA) for safety practices prior to performing these functions. Installers shall provide temporary bracing per BCSI. Unless noted otherwise, top chord shall have properly attached structural sheathing and bottom chord shall have a properly attached rigid ceiling. Locations shown for permanent lateral restraint of webs shall have bracing installed per BCSI sections B3, B7 or B10, as applicable.

ITW Building Components Group Inc. (ITWBCG) shall not be responsible for any deviation from this design, any failure to build the truss in conformance with ANSI/TPI 1, or for handling, shipping, installing and bracing of trusses. Apply plates to each face of truss and position as shown above and on the Joint Details, unless noted otherwise. Refer to drawings 160A-Z for standard plate positions. A seal on this drawing or cover page listing this drawing, indicates acceptance of professional engineering responsibility solely for the design shown. The suitability and use of this design for any structure is the responsibility of the Building Designer per ANSI/TPI 1 Sec.2. For more information see: This job's general notes page; ITW-BCG: www.itwbcg.com; TPI: www.tpinst.org; WTCA: www.sbcindustry.com; ICC: www.iccsafe.org

WALTER P. FINN LICENSE No.22839 STATE OF FLORIDA PROFESSIONAL ENGINEER
05/16/2012

TC LL	20.0 PSF	REF	R487-- 81755
TC DL	10.0 PSF	DATE	05/16/12
BC DL	10.0 PSF	DRW	HCUSR487 12137032
BC LL	0.0 PSF	HC-ENG	JB/WPF
TOT.LD.	40.0 PSF	SEQN-	95335
DUR.FAC.	1.25		
SPACING	24.0"	JREF-	1UM4487_Z03

(12-089--BRYAN ZECHER Garrison Res. -- , ** - CJ3S1 3' Jack)

THIS DWG PREPARED FROM COMPUTER INPUT (LOADS & DIMENSIONS) SUBMITTED BY TRUSS MFR.

Top chord 2x4 SP #1
Bot chord 2x4 SP #1
Webs 2x4 SP #3

Left end vertical exposed to wind pressure. Deflection meets L/240 criteria for brittle and flexible wall coverings.

Left cantilever is exposed to wind

Roof overhang supports 2.00 psf soffit load.

Deflection meets L/240 live and L/180 total load. Creep increase factor for dead load is 1.50.

Negative reaction(s) of -228# MAX. (See below) from a non-wind load case requires uplift connection.

120 mph wind, 15.00 ft mean hgt, ASCE 7-10, CLOSED bldg, Located anywhere in roof, RISK CAT II, EXP C, wind TC DL=5.0 psf, wind BC DL=5.0 psf. GCpi(+/-)=0.18

Wind loads and reactions based on MWFRS with additional C&C member design.

Bottom chord checked for 10.00 psf non-concurrent live load.

Provide (2) 16d common nails(0.162"x3.5"), toe nailed at Top chord.
Provide (2) 16d common nails(0.162"x3.5"), toe nailed at Bot chord.

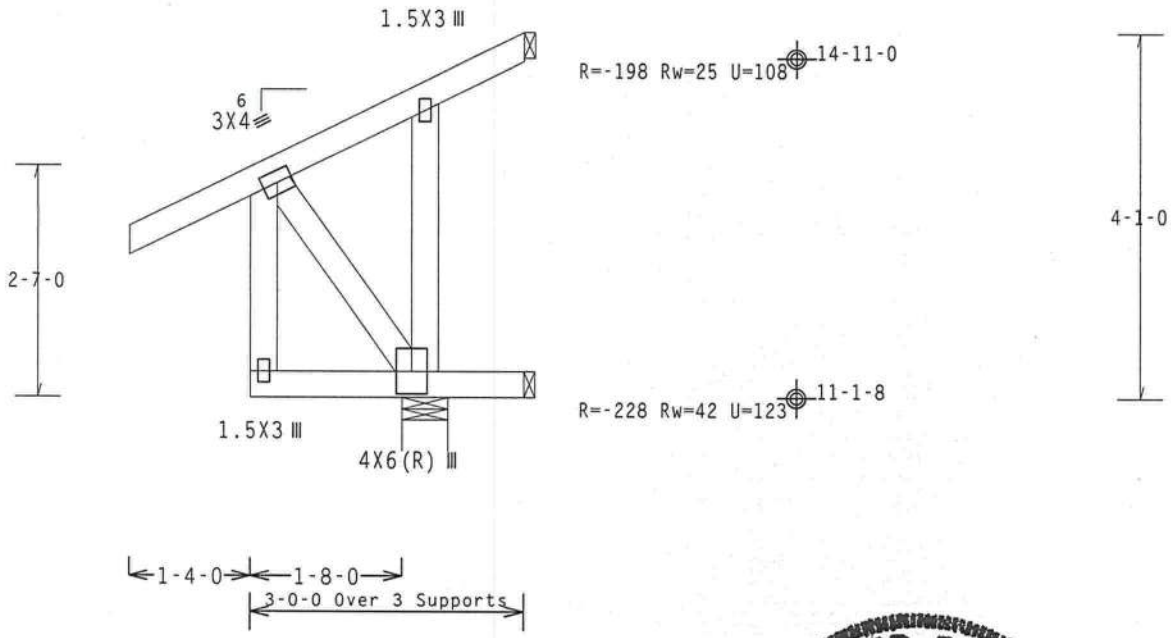

Design Crit: FBC2010Res/TPI-2007(STD)
FT/RT=20%(0%)/0(0)

PLT TYP. Wave

10.03.0 QTY

FL/-/4/-/-/R/-

Scale =.5"/Ft.

ALPINE
ITW Building Components Group Inc.
Haines City, FL 33844
FL COA #0 278

WARNING READ AND FOLLOW ALL NOTES ON THIS SHEET!
IMPORTANT FURNISH THIS DESIGN TO ALL CONTRACTORS INCLUDING INSTALLERS.

Trusses require extreme care in fabricating, handling, shipping, installing and bracing. Refer to and follow the latest edition of BCSI (Building Component Safety Information, by TPI and WTCA) for safety practices prior to performing these functions. Installers shall provide temporary bracing per BCSI. Unless noted otherwise, top chord shall have properly attached structural sheathing and bottom chord shall have a properly attached rigid ceiling. Locations shown for permanent lateral restraint of webs shall have bracing installed per BCSI sections B3, B7 or B10, as applicable.

ITW Building Components Group Inc. (ITWBCG) shall not be responsible for any deviation from this design, any failure to build the truss in conformance with ANSI/TPI 1, or for handling, shipping, installation and bracing of trusses. Apply plates to each face of truss and position as shown above and on the Joint Details, unless noted otherwise. Refer to drawings 160A-Z for standard plate positions. A seal on this drawing or cover page listing this drawing, indicates acceptance of professional engineering responsibility solely for the design shown. The suitability and use of this design for any structure is the responsibility of the Building Designer per ANSI/TPI 1 Sec.2. For more information see: This job's general notes page; ITW-BCG: www.itwbcg.com; TPI: www.tpinst.org; WTCA: www.sbcindustry.com; ICC: www.iccsafe.org

WALTER P. FINN
LICENSE
No. 22839
STATE OF FLORIDA
PROFESSIONAL ENGINEER

05/16/2012

TC LL	20.0 PSF	REF R487-- 81756
TC DL	10.0 PSF	DATE 05/16/12
BC DL	10.0 PSF	DRW HCUSR487 12137033
BC LL	0.0 PSF	HC-ENG JB/WPF
TOT.LD.	40.0 PSF	SEQN- 95341
DUR.FAC.	1.25	
SPACING	24.0"	JREF- 1UM4487_Z03

(12-089--BRYAN ZECHER Garrison Res. -- , ** - CJ3T 3' Jack)

THIS DWG PREPARED FROM COMPUTER INPUT (LOADS & DIMENSIONS) SUBMITTED BY TRUSS MFR.

Top chord 2x4 SP #1
Bot chord 2x4 SP #1
Webs 2x4 SP #3

Roof overhang supports 2.00 psf soffit load.

Bottom chord checked for 10.00 psf non-concurrent live load.

Provide (2) 16d common nails(0.162"x3.5"), toe nailed at Top chord.
Provide (2) 16d common nails(0.162"x3.5"), toe nailed at Bot chord.

120 mph wind, 15.00 ft mean hgt, ASCE 7-10, CLOSED bldg, Located anywhere in roof, RISK CAT II, EXP C, wind TC DL=5.0 psf, wind BC DL=5.0 psf. GCpi(+/-)=0.18

Wind loads and reactions based on MWFRS with additional C&C member design.

Deflection meets L/240 live and L/180 total load. Creep increase factor for dead load is 1.50.

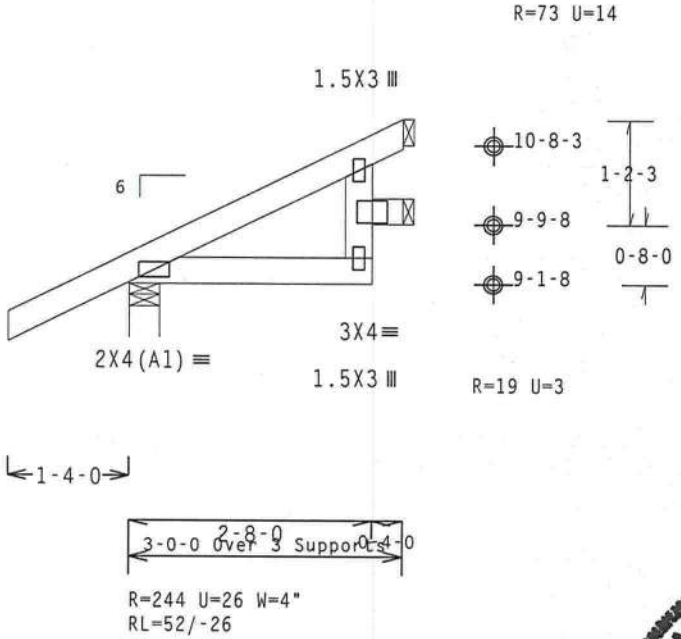

Design Crit: FBC2010Res/TPI-2007(STD)
FT/RT=20%(0%)/0(0)

PLT TYP. Wave

10/03.1 QTY:

FL/-/4/-/-/R/-

Scale =.5"/Ft.

ALPINE
ITW Building Components Group Inc.
Haines City, FL 33844
FL COA #0 278

WARNING READ AND FOLLOW ALL NOTES ON THIS SHEET!
IMPORTANT FURNISH THIS DESIGN TO ALL CONTRACTORS INCLUDING INSTALLERS.

Trusses require extreme care in fabricating, handling, shipping, installing and bracing. Refer to and follow the latest edition of BCSI (Building Component Safety Information, by TPI and WTCA) for safety practices prior to performing these functions. Installers shall provide temporary bracing per BCSI. Unless noted otherwise, top chord shall have properly attached structural sheathing and bottom chord shall have a properly attached rigid ceiling. Locations shown for permanent lateral restraint of webs shall have bracing installed per BCSI sections B3, B7 or B10, as applicable.

ITW Building Components Group Inc. (ITWBCG) shall not be responsible for any deviation from this design, any failure to build the truss in conformance with ANSI/TPI 1, or for handling, shipping, installation and bracing of trusses. Apply plates to each face of truss and position as shown above and on the Joint Details, unless noted otherwise. Refer to drawings 160A-Z for standard plate positions. A seal on this drawing or cover page listing this drawing, indicates acceptance of professional engineering responsibility solely for the design shown. The suitability and use of this design for any structure is the responsibility of the Building Designer per ANSI/TPI 1 Sec.2. For more information see: This job's general notes page; ITW-BCG: www.itwbcg.com; TPI: www.tpinst.org; WTCA: www.sbcindustry.com; ICC: www.iccsafe.org

WALTER P. FINN
LICENSE
No 22839
STATE OF FLORIDA
PROFESSIONAL ENGINEER
05/16/2012

TC LL	20.0 PSF	REF R487-- 81757
TC DL	10.0 PSF	DATE 05/16/12
BC DL	10.0 PSF	DRW HCUSR487 12137062
BC LL	0.0 PSF	HC-ENG JB/WPF
TOT.LD.	40.0 PSF	SEQN- 95470
DUR.FAC.	1.25	
SPACING	24.0"	JREF- 1UM4487_Z03

THIS DWG PREPARED FROM COMPUTER INPUT (LOADS & DIMENSIONS) SUBMITTED BY TRUSS MFR.

(12-089--BRYAN ZECHER Garrison Res. -- , ** - CJ5 5' Jack)

Top chord 2x4 SP #1
Bot chord 2x4 SP #1

Roof overhang supports 2.00 psf soffit load.

Bottom chord checked for 10.00 psf non-concurrent live load.

Deflection meets L/240 live and L/180 total load. Creep increase factor for dead load is 1.50.

120 mph wind, 15.00 ft mean hgt, ASCE 7-10, CLOSED bldg, not located within 4.50 ft from roof edge, RISK CAT II, EXP C, wind TC DL=5.0 psf, wind BC DL=5.0 psf. GCpi(+/-)=0.18

Wind loads and reactions based on MWFRS with additional C&C member design.

Provide (2) 16d common nails(0.162"x3.5"), toe nailed at Top chord.
Provide (2) 16d common nails(0.162"x3.5"), toe nailed at Bot chord.

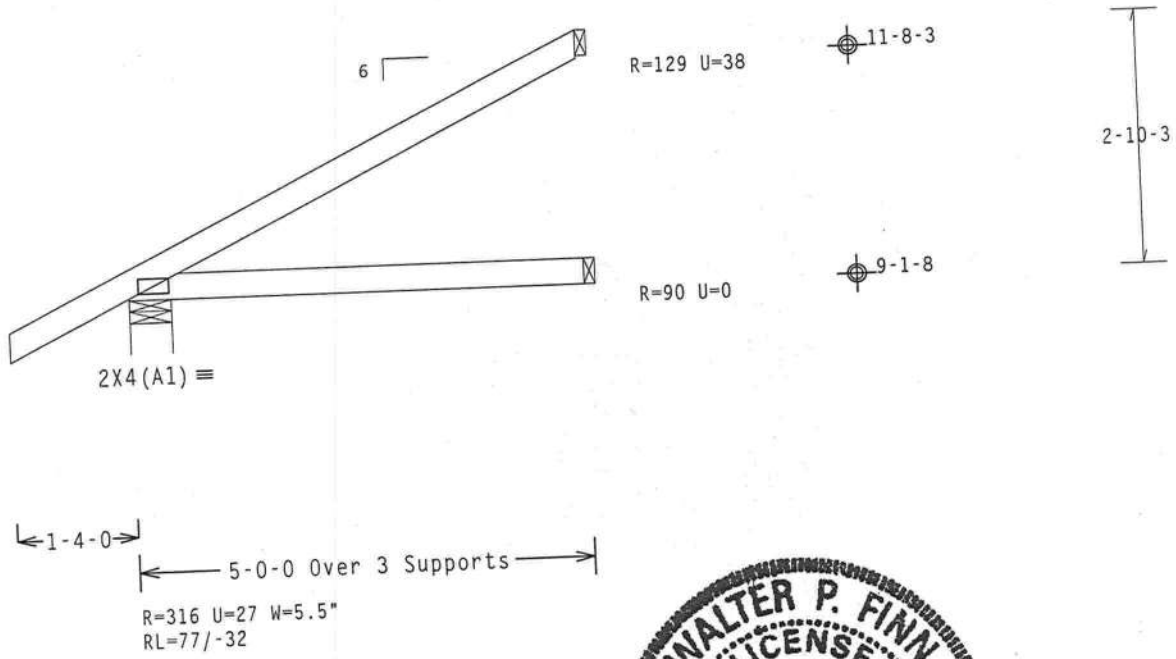

Design Crit: FBC2010Res/TPI-2007(STD) 10.03 11.0209.20 QTY 18 FL/-/4/-/-/R/- Scale =.5"/Ft.
FT/RT=20%(0%)/0(0)

PLT TYP. Wave

WARNING READ AND FOLLOW ALL NOTES ON THIS SHEET!
IMPORTANT FURNISH THIS DESIGN TO ALL CONTRACTORS INCLUDING INSTALLERS.

Trusses require extreme care in fabricating, handling, shipping, installing and bracing. Refer to and follow the latest edition of BCSI (Building Component Safety Information, by TPI and WTCA) [illegible] BCSI. Unless noted otherwise, top chord shall have properly attached structural sheathing and bottom chord [illegible] shall have a properly attached rigid ceiling. Locations shown for permanent lateral restraint of webs [illegible] shall have bracing installed per BCSI sections B3, B7 or B10, as applicable.

ITW Building Components Group Inc. (ITWBCG) shall not be responsible for any deviation from this design [illegible] any failure to build the truss in conformance with ANSI/TPI 1, or for handling, shipping, installing and bracing of trusses. Apply plates to each face of truss and position as shown above and on the Job Details, unless noted otherwise. Refer to drawings 160A-2 for standard plate positions. A seal on this drawing or cover page listing this drawing, indicates acceptance of professional engineering responsibility solely for the design shown. The suitability and use of this design for any structure is the responsibility of the Building Designer per ANSI/TPI 1 Sec.2. For more information see: This Job's general notes page; ITW-BCG: www.itwbcg.com; TPI: www.tpinst.org; WTCA: www.sbcindustry.com; [illegible]

ALPINE
ITW Building Components Group Inc.
Haines City, FL 33844

WALTER P. FINN LICENSE No.22839 STATE OF FLORIDA PROFESSIONAL ENGINEER

05/16/2012

TC LL	20.0 PSF	REF	R487-- 81758
TC DL	10.0 PSF	DATE	05/16/12
BC DL	10.0 PSF	DRW	HCUSR487 12137034
BC LL	0.0 PSF	HC-ENG	JB/WPF
TOT.LD.	40.0 PSF	SEQN-	95225
DUR.FAC.	1.25		
SPACING	24.0"	JREF-	1UM4487_Z03

(12-089--BRYAN ZECHER Garrison Res. -- , ** - CJ5B 5' Jack)

Top chord 2x4 SP #1
Bot chord 2x4 SP #1
Webs 2x4 SP #3

Left end vertical not exposed to wind pressure.

In lieu of structural panels use purlins to brace all flat TC @ 24" OC.

Deflection meets L/240 live and L/180 total load. Creep increase factor for dead load is 1.50.

120 mph wind, 15.00 ft mean hgt, ASCE 7-10, CLOSED bldg, not located within 4.50 ft from roof edge, RISK CAT II, EXP C, wind TC DL=5.0 psf, wind BC DL=5.0 psf. GCpi(+/-)=0.18

Wind loads and reactions based on MWFRS with additional C&C member design.

Bottom chord checked for 10.00 psf non-concurrent live load.

Provide (2) 16d common nails(0.162"x3.5"), toe nailed at Top chord.
Provide (2) 16d common nails(0.162"x3.5"), toe nailed at Bot chord.

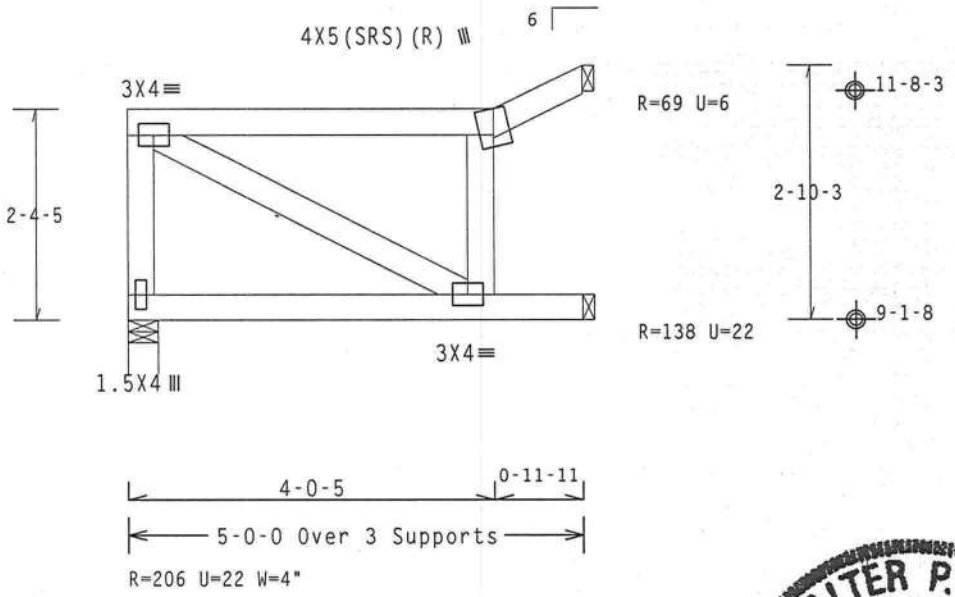

Design Crit: FBC2010Res/TPI-2007(STD)
FT/RT=20%(0%)/0(0)

PLT TYP. Wave 10.03.11 0300.20 QTY 1 FL/-/4/-/-/R/- Scale =.5"/Ft.

ALPINE
ITW Building Components Group Inc.
Haines City, FL 33844
FL COA #0 278

WARNING READ AND FOLLOW ALL NOTES ON THIS SHEET!
IMPORTANT FURNISH THIS DESIGN TO ALL CONTRACTORS INCLUDING INSTALLERS.

Trusses require extreme care in fabricating, handling, shipping, installing and bracing. Refer to and follow the latest edition of BCSI (Building Component Safety Information, by TPI and WTCA) for safety practices prior to performing these functions. Installers shall provide temporary bracing per BCSI. Unless noted otherwise, top chord shall have properly attached structural sheathing and bottom chord shall have a properly attached rigid ceiling. Locations shown for permanent lateral restraint of webs shall have bracing installed per BCSI sections B3, B7 or B10, as applicable.

ITW Building Components Group Inc. (ITWBCG) shall not be responsible for any deviation from this design, any failure to build the truss in conformance with ANSI/TPI 1, or for handling, shipping, installation and bracing of trusses. Apply plates to each face of truss and position as shown above and on the Joint Details, unless noted otherwise. Refer to drawings 160A-Z for standard plate positions. A seal on this drawing or cover page listing this drawing, indicates acceptance of professional engineering responsibility solely for the design shown. The suitability and use of this design for any structure is the responsibility of the Building Designer per ANSI/TPI 1 Sec.2. For more information see: This job's general notes page; ITW-BCG: www.itwbcg.com; TPI: www.tpinst.org; WTCA: www.sbcindustry.com; ICC: www.iccsafe.org

WALTER P. FINN LICENSE No.22839 STATE OF FLORIDA PROFESSIONAL ENGINEER
05/16/2012

TC LL	20.0 PSF	REF	R487-- 81759
TC DL	10.0 PSF	DATE	05/16/12
BC DL	10.0 PSF	DRW	HCUSR487 12137035
BC LL	0.0 PSF	HC-ENG	JB/WPF
TOT.LD.	40.0 PSF	SEQN-	95134
DUR.FAC.	1.25		
SPACING	24.0"	JREF-	1UM4487_Z03

(12-089--BRYAN ZECHER Garrison Res. -- , ** - CJ5T 5' Jack)

Top chord 2x4 SP #1
Bot chord 2x4 SP #1
Webs 2x4 SP #3

Roof overhang supports 2.00 psf soffit load.

Bottom chord checked for 10.00 psf non-concurrent live load.

Provide (2) 16d common nails(0.162"x3.5"), toe nailed at Top chord.
Provide (2) 16d common nails(0.162"x3.5"), toe nailed at Bot chord.

120 mph wind, 15.00 ft mean hgt, ASCE 7-10, CLOSED bldg, not located within 4.50 ft from roof edge, RISK CAT II, EXP C, wind TC DL=5.0 psf, wind BC DL=5.0 psf. GCpi(+/-)=0.18

Wind loads and reactions based on MWFRS with additional C&C member design.

Deflection meets L/240 live and L/180 total load. Creep increase factor for dead load is 1.50.

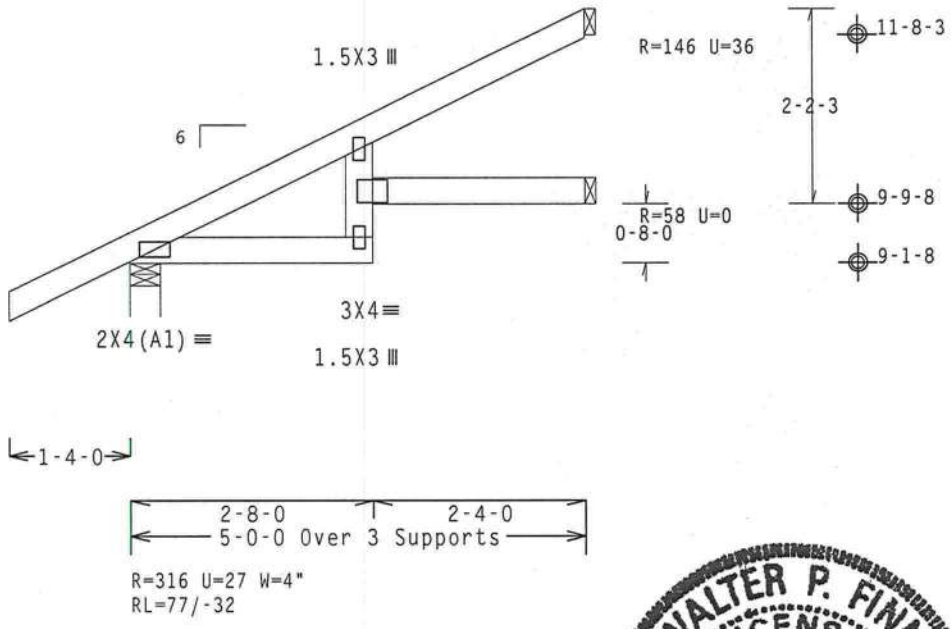

Design Crit: FBC2010Res/TPI-2007(STD) 10:03.11.0209.20 QTY:2 FL/-/4/-/-/R/-

PLT TYP. Wave FT/RT=20%(0%)/0(0) Scale =.5"/Ft.

ALPINE
ITW Building Components Group Inc.
Haines City, FL 33844
FL COA #0 278

WARNING READ AND FOLLOW ALL NOTES ON THIS SHEET!
IMPORTANT FURNISH THIS DESIGN TO ALL CONTRACTORS INCLUDING INSTALLERS.

Trusses require extreme care in fabricating, handling, shipping, installing and bracing. Refer to and follow the latest edition of BCSI (Building Component Safety Information, by TPI and WTCA) for safety practices prior to performing these functions. Installers shall provide temporary bracing per BCSI. Unless noted otherwise, top chord shall have properly attached structural sheathing and bottom chord shall have a properly attached rigid ceiling. Locations shown for permanent lateral restraint of webs shall have bracing installed per BCSI sections B3, B7 or B10, as applicable.

ITW Building Components Group Inc. (ITWBCG) shall not be responsible for any deviation from this design, any failure to build the truss in conformance with ANSI/TPI 1, or for handling, shipping, installing and bracing of trusses. Apply plates to each face of truss and position as shown above and on the Joint Details, unless noted otherwise. Refer to drawings 160A-Z for standard plate positions. A seal on this drawing or cover page listing this drawing, indicates acceptance of professional engineering responsibility solely for the design shown. The suitability and use of this design for any structure is the responsibility of the Building Designer per ANSI/TPI 1 Sec.2. For more information see: This job's general notes page; ITW-BCG: www.itwbcg.com; TPI: www.tpinst.org; WTCA: www.sbcindustry.com; ICC: www.iccsafe.org

WALTER P. FINN LICENSE No.22839 STATE OF FLORIDA PROFESSIONAL ENGINEER

05/16/2012

TC LL	20.0 PSF	REF	R487-- 81760
TC DL	10.0 PSF	DATE	05/16/12
BC DL	10.0 PSF	DRW	HCUSR487 12137036
BC LL	0.0 PSF	HC-ENG	JB/WPF
TOT.LD.	40.0 PSF	SEQN-	95474
DUR.FAC.	1.25		
SPACING	24.0"	JREF-	1UM4487_Z03

(12-089--BRYAN ZECHER Garrison Res. -- , ** - EJ11B 7' Common Girder)

Top chord 2x4 SP #1
Bot chord 2x4 SP #1
Webs 2x4 SP #3

120 mph wind, 15.00 ft mean hgt, ASCE 7-10, CLOSED bldg, Located anywhere in roof, RISK CAT II, EXP C, wind TC DL=5.0 psf, wind BC DL=5.0 psf. GCpi(+/-)=0.18

Wind loads and reactions based on MWFRS with additional C&C member design.

These support conditions used at bearings indicated
(H1) = Simpson LUS24 w/ (1)2x4 SP #1 supporting member.
(4) 0.148"x3" nails into supporting member,
(2) 0.148"x3" nails into supported member.

Truss must be installed as shown with top chord up.

Special loads
------(Lumber Dur.Fac.=1.25 / Plate Dur.Fac.=1.25)
TC- From 60 plf at 0.00 to 60 plf at 7.00
BC- From 20 plf at 0.00 to 20 plf at 7.00
BC- 437.46 lb Conc. Load at 5.06

End verticals not exposed to wind pressure.

H = recommended connection based on manufacturer tested capacities and calculations. Conditions may exist that require different connections than indicated. Refer to manufacturer publication for additional information.

Bottom chord checked for 10.00 psf non-concurrent live load.

Deflection meets L/240 live and L/180 total load. Creep increase factor for dead load is 1.50.

The TC of this truss shall be braced with attached spans at 24" OC in lieu of structural sheathing.

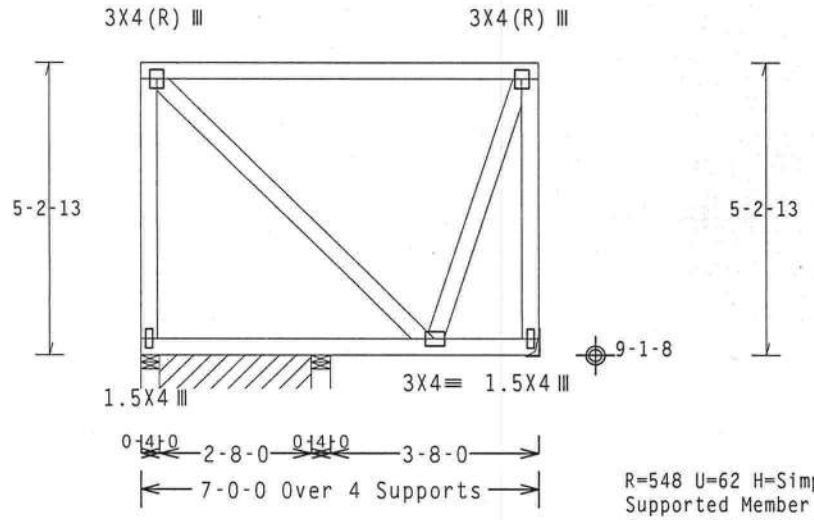

R=317 U=83 W=4"

R=42 PLF U=0 PLF W=2-8-0

R=110 U=0 W=4"

R=548 U=62 H=Simpson LUS24
Supported Member Face: (2) 0.148"x3" nails
Supporting Member Face: (4) 0.148"x3" nails
Supporting Member : (1) 2x4 SP #1

WALTER P. FINN LICENSE No. 22839 STATE OF FLORIDA PROFESSIONAL ENGINEER
05/16/2012

Design Crit: FBC2010Res/TPI-2007(STD) 10/03.1[illegible] QTY: FL/-/4/-/-/R/-
PLT TYP. Wave FT/RT=20%(0%)/0(0) Scale =.3125"/Ft.

ALPINE
ITW Building Components Group Inc.
Haines City, FL 33844
FL COA #0 278

WARNING READ AND FOLLOW ALL NOTES ON THIS SHEET!
IMPORTANT FURNISH THIS DESIGN TO ALL CONTRACTORS INCLUDING INSTALLERS.

Trusses require extreme care in fabricating, handling, shipping, installing and bracing. Refer to and follow the latest edition of BCSI (Building Component Safety Information, by TPI and WTCA) for safety practices prior to performing these functions. Installers shall provide temporary bracing per BCSI. Unless noted otherwise, top chord shall have properly attached structural sheathing and bottom chord shall have a properly attached rigid ceiling. Locations shown for permanent lateral restraint of webs shall have bracing installed per BCSI sections B3, B7 or B10, as applicable.

ITW Building Components Group Inc. (ITWBCG) shall not be responsible for any deviation from this design, any failure to build the truss in conformance with ANSI/TPI 1, or for handling, shipping, installation and bracing of trusses. Apply plates to each face of truss and position as shown above and on the Joint Details, unless noted otherwise. Refer to drawings 160A-Z for standard plate positions. A seal on this drawing or cover page listing this drawing, indicates acceptance of professional engineering responsibility solely for the design shown. The suitability and use of this design for any structure is the responsibility of the Building Designer per ANSI/TPI 1 Sec.2. For more information see: This job's general notes page; ITW-BCG: www.itwbcg.com; TPI: www.tpinst.org; WTCA: www.sbcindustry.com; ICC: www.iccsafe.org

TC LL	20.0 PSF	REF	R487-- 81761
TC DL	10.0 PSF	DATE	05/16/12
BC DL	10.0 PSF	DRW	HCUSR487 12137053
BC LL	0.0 PSF	HC-ENG	JB/WPF
TOT.LD.	40.0 PSF	SEQN-	95167
DUR.FAC.	1.25		
SPACING	24.0"	JREF-	1UM4487_Z03

(12-089--BRYAN ZECHER Garrison Res. -- , ** - EJ5S 5' End Jack)

Top chord 2x4 SP #1
Bot chord 2x4 SP #1
Webs 2x4 SP #3

Left end vertical exposed to wind pressure. Deflection meets L/240 criteria for brittle and flexible wall coverings.

Roof overhang supports 2.00 psf soffit load.

Deflection meets L/240 live and L/180 total load. Creep increase factor for dead load is 1.50.

120 mph wind, 15.00 ft mean hgt, ASCE 7-10, CLOSED bldg, Located anywhere in roof, RISK CAT II, EXP C, wind TC DL=5.0 psf, wind BC DL=5.0 psf. GCpi(+/-)=0.18

Wind loads and reactions based on MWFRS with additional C&C member design.

Bottom chord checked for 10.00 psf non-concurrent live load.

Provide (2) 16d common nails(0.162"x3.5"), toe nailed at Top chord.
Provide (2) 16d common nails(0.162"x3.5"), toe nailed at Bot chord.

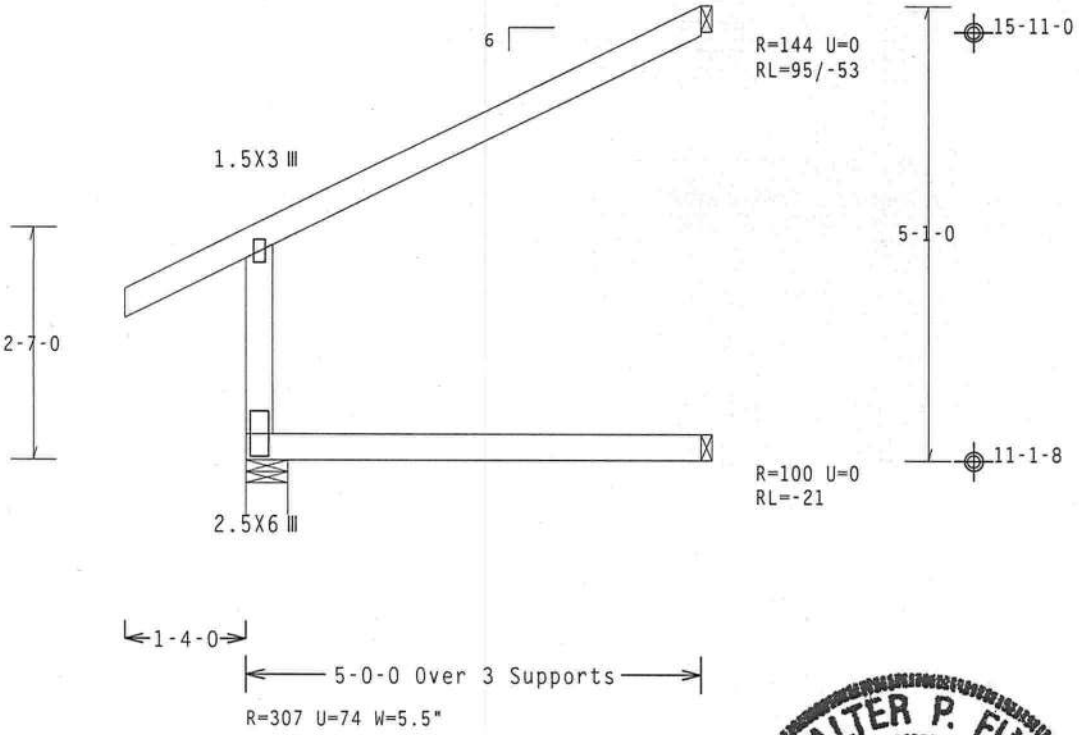

Design Crit: FBC2010Res/TPI-2007(STD) 10.03.1 QTY:
FT/RT=20%(0%)/0(0)

PLT TYP. Wave

FL/-/4/-/-/R/-

Scale =.5"/Ft.

ALPINE
ITW Building Components Group Inc.
Haines City, FL 33844
FL COA #0 278

WARNING READ AND FOLLOW ALL NOTES ON THIS SHEET!
IMPORTANT FURNISH THIS DESIGN TO ALL CONTRACTORS INCLUDING INSTALLERS.

Trusses require extreme care in fabricating, handling, shipping, installing and bracing. Refer to and follow the latest edition of BCSI (Building Component Safety Information, by TPI and WTCA) for safety practices prior to performing these functions. Installers shall provide temporary bracing per BCSI. Unless noted otherwise, top chord shall have properly attached structural sheathing and bottom chord shall have a properly attached rigid ceiling. Locations shown for permanent lateral restraint of webs shall have bracing installed per BCSI sections B3, B7 or B10, as applicable.

ITW Building Components Group Inc. (ITWBCG) shall not be responsible for any deviation from this design, any failure to build the truss in conformance with ANSI/TPI 1, or for handling, shipping, installation and bracing of trusses. Apply plates to each face of truss and position as shown above and on the Joint Details, unless noted otherwise. Refer to drawings 160A-Z for standard plate positions. A seal on this drawing or cover page listing this drawing, indicates acceptance of professional engineering responsibility solely for the design shown. The suitability and use of this design for any structure is the responsibility of the Building Designer per ANSI/TPI 1 Sec.2. For more information see: This job's general notes page; ITW-BCG: www.itwbcg.com; TPI: www.tpinst.org; WTCA: www.sbcindustry.com; ICC: www.iccsafe.org

WALTER P. FINN LICENSE No. 22839 STATE OF FLORIDA PROFESSIONAL ENGINEER

05/16/2012

TC LL	20.0 PSF	REF	R487-- 81762
TC DL	10.0 PSF	DATE	05/16/12
BC DL	10.0 PSF	DRW	HCUSR487 12137037
BC LL	0.0 PSF	HC-ENG	JB/WPF
TOT.LD.	40.0 PSF	SEQN-	95338
DUR.FAC.	1.25		
SPACING	24.0"	JREF-	1UM4487_Z03

(12-089--BRYAN ZECHER Garrison Res. -- , ** - EJ7 7' End Jack)

Top chord 2x4 SP #1
Bot chord 2x4 SP #1

Roof overhang supports 2.00 psf soffit load.

Bottom chord checked for 10.00 psf non-concurrent live load.

Deflection meets L/240 live and L/180 total load. Creep increase factor for dead load is 1.50.

120 mph wind, 15.00 ft mean hgt, ASCE 7-10, CLOSED bldg, not located within 4.50 ft from roof edge, RISK CAT II, EXP C, wind TC DL=5.0 psf, wind BC DL=5.0 psf. GCpi(+/-)=0.18

Wind loads and reactions based on MWFRS with additional C&C member design.

Provide (2) 16d common nails(0.162"x3.5"), toe nailed at Top chord.
Provide (2) 16d common nails(0.162"x3.5"), toe nailed at Bot chord.

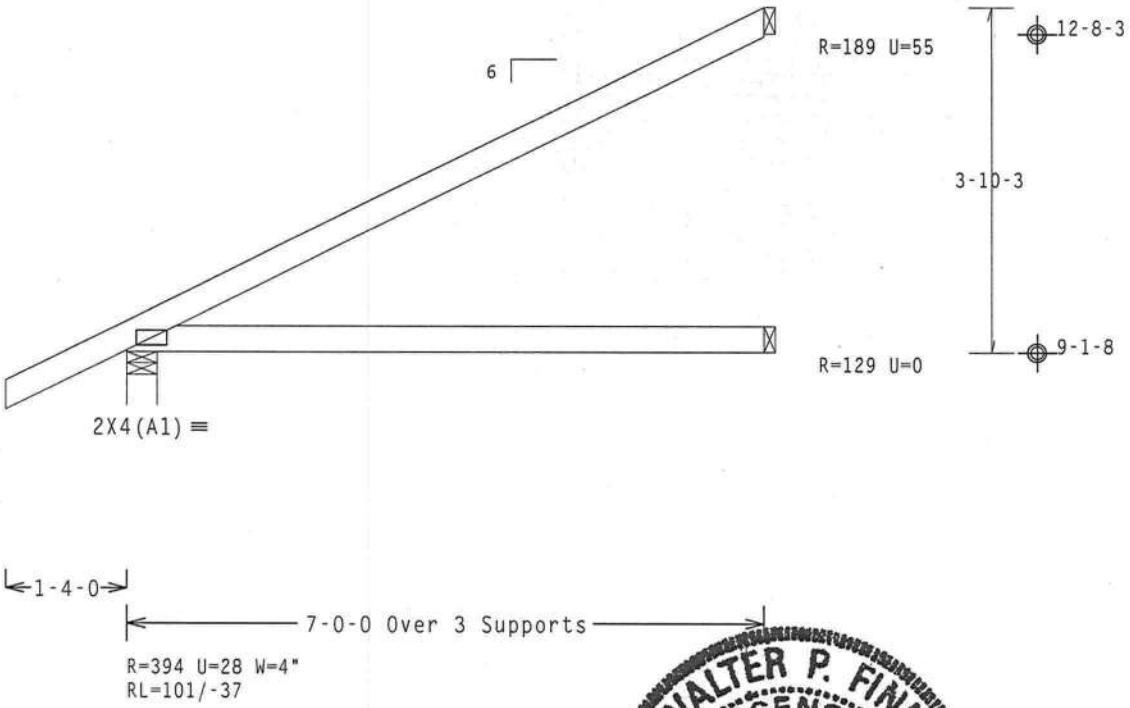

Design Crit: FBC2010Res/TPI-2007(STD)
FT/RT=20%(0%)/0(0)

PLT TYP. Wave

10.03.11 0209.80 QTY 32 FL/-/4/-/-/R/- Scale =.5"/Ft.

ALPINE
ITW Building Components Group Inc.
Haines City, FL 33844
FL COA #0 278

WARNING READ AND FOLLOW ALL NOTES ON THIS SHEET!
IMPORTANT FURNISH THIS DESIGN TO ALL CONTRACTORS INCLUDING INSTALLERS.

Trusses require extreme care in fabricating, handling, shipping, installing and bracing. Refer to and follow the latest edition of BCSI (Building Component Safety Information, by TPI and WTCA) for safety practices prior to performing these functions. Installers shall provide temporary bracing per BCSI. Unless noted otherwise, top chord shall have properly attached structural sheathing and bottom chord shall have a properly attached rigid ceiling. Locations shown for permanent lateral restraint of webs shall have bracing installed per BCSI sections B3, B7 or B10, as applicable.

ITW Building Components Group Inc. (ITWBCG) shall not be responsible for any deviation from this design, any failure to build the truss in conformance with ANSI/TPI 1, or for handling, shipping, installing and bracing of trusses. Apply plates to each face of truss and position as shown above and on the Joint Details, unless noted otherwise. Refer to drawings 160A-Z for standard plate positions. A seal on this drawing or cover page listing this drawing, indicates acceptance of professional engineering responsibility solely for the design shown. The suitability and use of this design for any structure is the responsibility of the Building Designer per ANSI/TPI 1 Sec.2. For more information see: This job's general notes page; ITW-BCG: www.itwbcg.com; TPI: www.tpinst.org; WTCA: www.sbcindustry.com; ICC: www.iccsafe.org

WALTER P. FINN LICENSE No.22839 STATE OF FLORIDA PROFESSIONAL ENGINEER
05/16/2012

TC LL	20.0 PSF	REF	R487-- 81763
TC DL	10.0 PSF	DATE	05/16/12
BC DL	10.0 PSF	DRW	HCUSR487 12137038
BC LL	0.0 PSF	HC-ENG	JB/WPF
TOT.LD.	40.0 PSF	SEQN-	95228
DUR.FAC.	1.25		
SPACING	24.0"	JREF-	1UM4487_Z03

(12-089--BRYAN ZECHER Garrison Res. -- , ** - EJ7B 7' End Jack)

Top chord 2x4 SP #1
Bot chord 2x4 SP #1
Webs 2x4 SP #3

Left end vertical not exposed to wind pressure.

In lieu of structural panels use purlins to brace all flat TC @ 24" OC.

Deflection meets L/240 live and L/180 total load. Creep increase factor for dead load is 1.50.

120 mph wind, 15.00 ft mean hgt, ASCE 7-10, CLOSED bldg, not located within 4.50 ft from roof edge, RISK CAT II, EXP C, wind TC DL=5.0 psf, wind BC DL=5.0 psf. GCpi(+/-)=0.18

Wind loads and reactions based on MWFRS with additional C&C member design.

Bottom chord checked for 10.00 psf non-concurrent live load.

Provide (2) 16d common nails(0.162"x3.5"), toe nailed at Top chord.
Provide (2) 16d common nails(0.162"x3.5"), toe nailed at Bot chord.

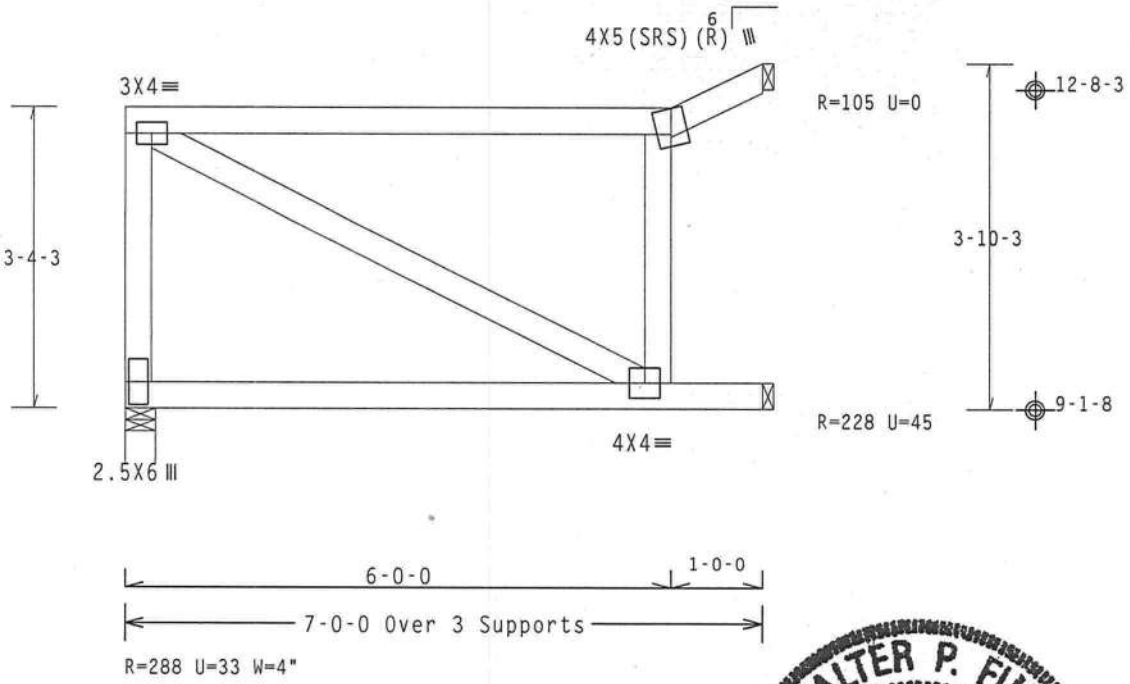

Design Crit: FBC2010Res/TPI-2007(STD)
FT/RT=20%(0%)/0(0)

PLT TYP. Wave

10.03.1 QTY:

FL/-/4/-/-/R/-

Scale =.5"/Ft.

WALTER P. FINN LICENSE No 22839 STATE OF FLORIDA PROFESSIONAL ENGINEER

05/16/2012

TC LL	20.0 PSF	REF R487-- 81764
TC DL	10.0 PSF	DATE 05/16/12
BC DL	10.0 PSF	DRW HCUSR487 12137039
BC LL	0.0 PSF	HC-ENG JB/WPF
TOT.LD.	40.0 PSF	SEQN- 95138
DUR.FAC.	1.25	
SPACING	24.0"	JREF- 1UM4487_Z03

ALPINE
ITW Building Components Group Inc.
Haines City, FL 33844
FL COA #0 278

WARNING READ AND FOLLOW ALL NOTES ON THIS SHEET!
IMPORTANT FURNISH THIS DESIGN TO ALL CONTRACTORS INCLUDING INSTALLERS.

Trusses require extreme care in fabricating, handling, shipping, installing and bracing. Refer to and follow the latest edition of BCSI (Building Component Safety Information, by TPI and WTCA) for safety practices prior to performing these functions. Installers shall provide temporary bracing per BCSI. Unless noted otherwise, top chord shall have properly attached structural sheathing and bottom chord shall have a properly attached rigid ceiling. Locations shown for permanent lateral restraint of webs shall have bracing installed per BCSI sections B3, B7 or B10, as applicable.

ITW Building Components Group Inc. (ITWBCG) shall not be responsible for any deviation from this design, any failure to build the truss in conformance with ANSI/TPI 1, or for handling, shipping, installation and bracing of trusses. Apply plates to each face of truss and position as shown above and on the Joint Details, unless noted otherwise. Refer to drawings 160A-Z for standard plate positions. A seal on this drawing or cover page listing this drawing, indicates acceptance of professional engineering responsibility solely for the design shown. The suitability and use of this design for any structure is the responsibility of the Building Designer per ANSI/TPI 1 Sec.2. For more information see: This job's general notes page; ITW-BCG: www.itwbcg.com; TPI: www.tpinst.org; WTCA: www.sbcindustry.com; ICC: www.iccsafe.org

(12-089--BRYAN ZECHER Garrison Res. -- , ** - EJ7G 7' Common Girder)

Top chord 2x4 SP #1
Bot chord 2x4 SP #1
Webs 2x4 SP #3

120 mph wind, 15.00 ft mean hgt, ASCE 7-10, CLOSED bldg, not located within 4.50 ft from roof edge, RISK CAT II, EXP C, wind TC DL=5.0 psf, wind BC DL=5.0 psf. GCpi(+/-)=0.18

Wind loads and reactions based on MWFRS with additional C&C member design.

Bottom chord checked for 10.00 psf non-concurrent live load.

Deflection meets L/240 live and L/180 total load. Creep increase factor for dead load is 1.50.

Special loads
------(Lumber Dur.Fac.=1.25 / Plate Dur.Fac.=1.25)
TC- From 62 plf at 0.00 to 62 plf at 7.00
BC- From 10 plf at 0.00 to 10 plf at 7.00
BC- 128.92 lb Conc. Load at 1.09
BC- 648.89 lb Conc. Load at 3.06
BC- 431.41 lb Conc. Load at 5.06

Right end vertical not exposed to wind pressure.

H = recommended connection based on manufacturer tested capacities and calculations. Conditions may exist that require different connections than indicated. Refer to manufacturer publication for additional information.

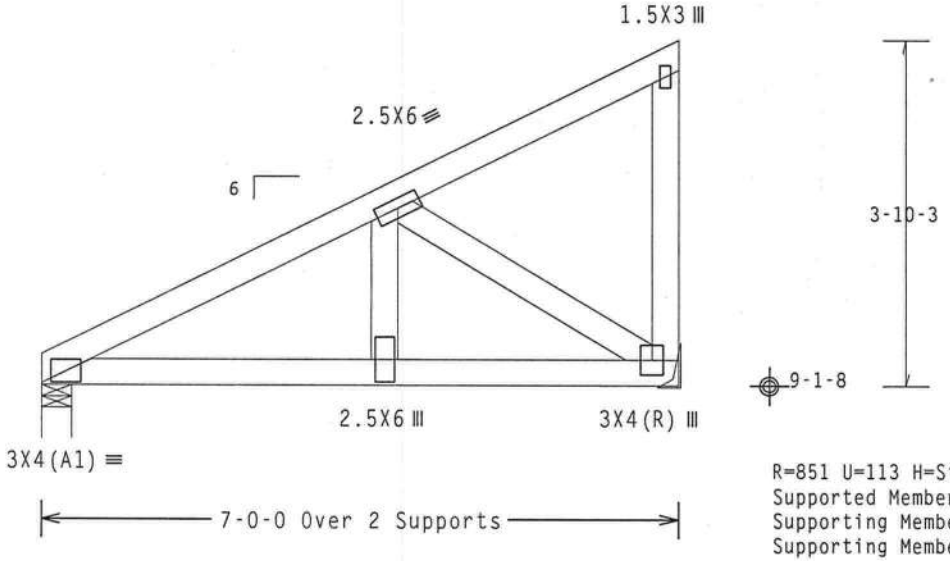

R=851 U=113 H=Simpson LUS26
Supported Member Face: (3) 0.148"x3" nails
Supporting Member Face: (4) 0.148"x3" nails
Supporting Member : (1) 2x6 SP #1 Dense

R=865 U=107 W=4"

Design Crit: FBC2010Res/TPI-2007(STD) 10.03 11.0209 20 QTY 1 FL/-/4/-/-/R/-
FT/RT=20%(0%)/0(0)

PLT TYP. Wave

Scale =.5"/Ft.

ALPINE
ITW Building Components Group Inc.
Haines City, FL 33844
FL COA #0 278

WARNING READ AND FOLLOW ALL NOTES ON THIS SHEET!
IMPORTANT FURNISH THIS DESIGN TO ALL CONTRACTORS INCLUDING INSTALLERS.

Trusses require extreme care in fabricating, handling, shipping, installing and bracing. Refer to, and follow the latest edition of BCSI (Building Component Safety Information, by TPI and WTCA) for safety practices prior to performing these functions. Installers shall provide temporary bracing per BCSI. Unless noted otherwise, top chord shall have properly attached structural sheathing and bottom chord shall have a properly attached rigid ceiling. Locations shown for permanent lateral restraint of webs shall have bracing installed per BCSI sections B3, B7 or B10, as applicable.

ITW Building Components Group Inc. (ITWBCG) shall not be responsible for any deviation from this design, any failure to build the truss in conformance with ANSI/TPI 1, or for handling, shipping, installing and bracing of trusses. Apply plates to each face of truss and position as shown above and on the Joint Details, unless noted otherwise. Refer to drawings 160A-Z for standard plate positions. A seal on this drawing or cover page listing this drawing, indicates acceptance of professional engineering responsibility solely for the design shown. The suitability and use of this design for any structure is the responsibility of the Building Designer per ANSI/TPI 1 Sec.2. For more information see: This job's general notes page; ITW-BCG: www.itwbcg.com; TPI: www.tpinst.org; WTCA: www.sbcindustry.com; ICC: www.iccsafe.org

WALTER P. FINN
LICENSE
No. 22839
STATE OF FLORIDA
PROFESSIONAL ENGINEER

05/16/2012

TC LL	20.0 PSF	REF	R487-- 81765
TC DL	10.0 PSF	DATE	05/16/12
BC DL	10.0 PSF	DRW	HCUSR487 12137054
BC LL	0.0 PSF	HC-ENG	JB/WPF
TOT.LD.	40.0 PSF	SEQN-	96059
DUR.FAC.	1.25		
SPACING	24.0"	JREF-	1UM4487_Z03

(12-089--BRYAN ZECHER Garrison Res. -- , ** - EJ7T 7' End Jack)

Top chord 2x4 SP #1
Bot chord 2x4 SP #1
Webs 2x4 SP #3

Roof overhang supports 2.00 psf soffit load.

Bottom chord checked for 10.00 psf non-concurrent live load.

MWFRS loads based on trusses located at least 7.50 ft. from roof edge.

120 mph wind, 15.00 ft mean hgt, ASCE 7-10, CLOSED bldg, not located within 4.50 ft from roof edge, RISK CAT II, EXP C, wind TC DL=5.0 psf, wind BC DL=5.0 psf. GCpi(+/-)=0.18

Wind loads and reactions based on MWFRS with additional C&C member design.

Deflection meets L/240 live and L/180 total load. Creep increase factor for dead load is 1.50.

Provide (2) 16d common nails(0.162"x3.5"), toe nailed at Top chord.
Provide (2) 16d common nails(0.162"x3.5"), toe nailed at Bot chord.

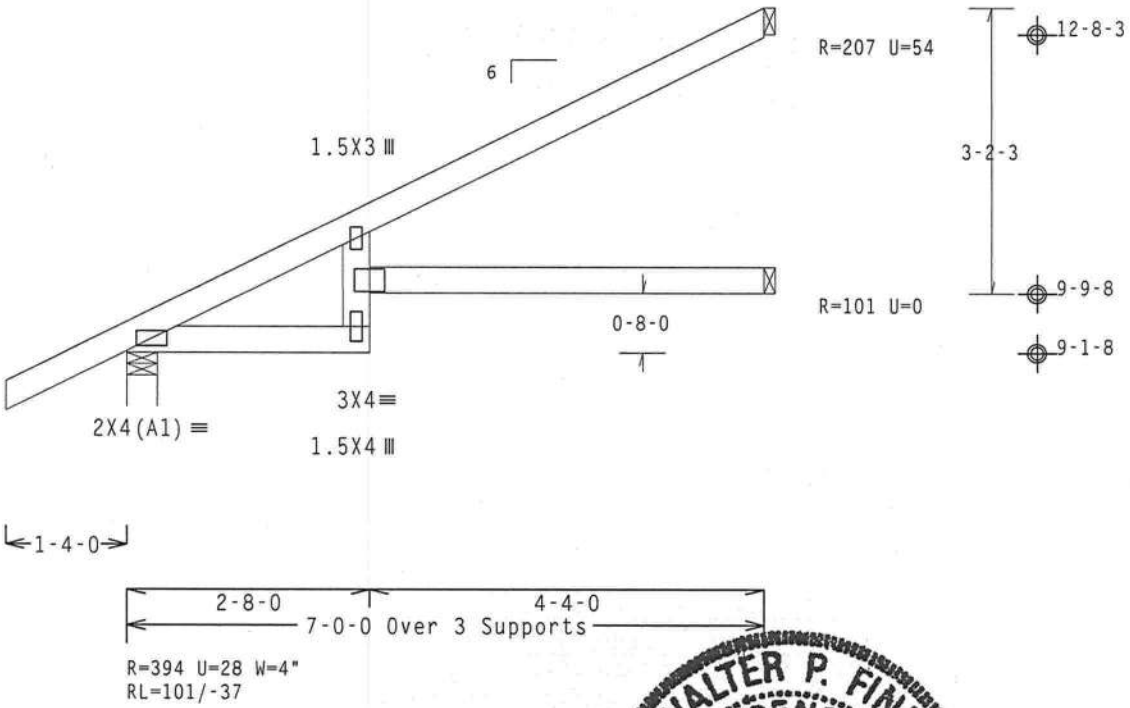

Design Crit: FBC2010Res/TPI-2007(STD) 10.03.11.0300.30 QTY:5

PLT TYP. Wave FT/RT=20%(0%)/0(0) FL/-/4/-/-/R/- Scale =.5"/Ft.

ALPINE
ITW Building Components Group Inc.
Haines City, FL 33844
FL COA #0 278

WARNING READ AND FOLLOW ALL NOTES ON THIS SHEET!
IMPORTANT FURNISH THIS DESIGN TO ALL CONTRACTORS INCLUDING INSTALLERS.

Trusses require extreme care in fabricating, handling, shipping, installing and bracing. Refer to and follow the latest edition of BCSI (Building Component Safety Information, by TPI and WTCA) for safety practices prior to performing these functions. Installers shall provide temporary bracing per BCSI. Unless noted otherwise, top chord shall have properly attached structural sheathing and bottom chord shall have a properly attached rigid ceiling. Locations shown for permanent lateral restraint of webs shall have bracing installed per BCSI sections B3, B7 or B10, as applicable.

ITW Building Components Group Inc. (ITWBCG) shall not be responsible for any deviation from this drawing, any failure to build the truss in conformance with ANSI/TPI 1, or for handling, shipping, installing and bracing of trusses. Apply plates to each face of truss and position as shown above and on the Joint Details, unless noted otherwise. Refer to drawings 160A-Z for standard plate positions. A seal on this drawing or cover page listing this drawing, indicates acceptance of professional engineering responsibility solely for the design shown. The suitability and use of this design for any structure is the responsibility of the Building Designer per ANSI/TPI 1 Sec.2. For more information see: This job's general notes page: ITW-BCG: www.itwbcg.com; TPI: www.tpinst.org; WTCA: www.sbcindustry.com; ICC: www.iccsafe.org

WALTER P. FINN
LICENSE
No.22839
STATE OF FLORIDA
PROFESSIONAL ENGINEER
05/16/2012

TC LL	20.0 PSF	REF	R487-- 81766
TC DL	10.0 PSF	DATE	05/16/12
BC DL	10.0 PSF	DRW	HCUSR487 12137040
BC LL	0.0 PSF	HC-ENG	JB/WPF
TOT.LD.	40.0 PSF	SEQN-	95478
DUR.FAC.	1.25		
SPACING	24.0"	JREF-	1UM4487_Z03

(12-089--BRYAN ZECHER Garrison Res. -- , ** - EJ9B 7' End Jack)

THIS DWG PREPARED FROM COMPUTER INPUT (LOADS & DIMENSIONS) SUBMITTED BY TRUSS MFR.

Top chord 2x4 SP #1
Bot chord 2x4 SP #1
Webs 2x4 SP #3

Left end vertical not exposed to wind pressure.

Bottom chord checked for 10.00 psf non-concurrent live load.

Truss must be installed as shown with top chord up.

MWFRS loads based on trusses located at least 7.50 ft. from roof edge.

120 mph wind, 15.00 ft mean hgt, ASCE 7-10, CLOSED bldg, Located anywhere in roof, RISK CAT II, EXP C, wind TC DL=5.0 psf, wind BC DL=5.0 psf. GCpi(+/-)=0.18

Wind loads and reactions based on MWFRS with additional C&C member design.

Deflection meets L/240 live and L/180 total load. Creep increase factor for dead load is 1.50.

Provide (2) 16d common nails(0.162"x3.5"), toe nailed at Top chord.
Provide (2) 16d common nails(0.162"x3.5"), toe nailed at Bot chord.

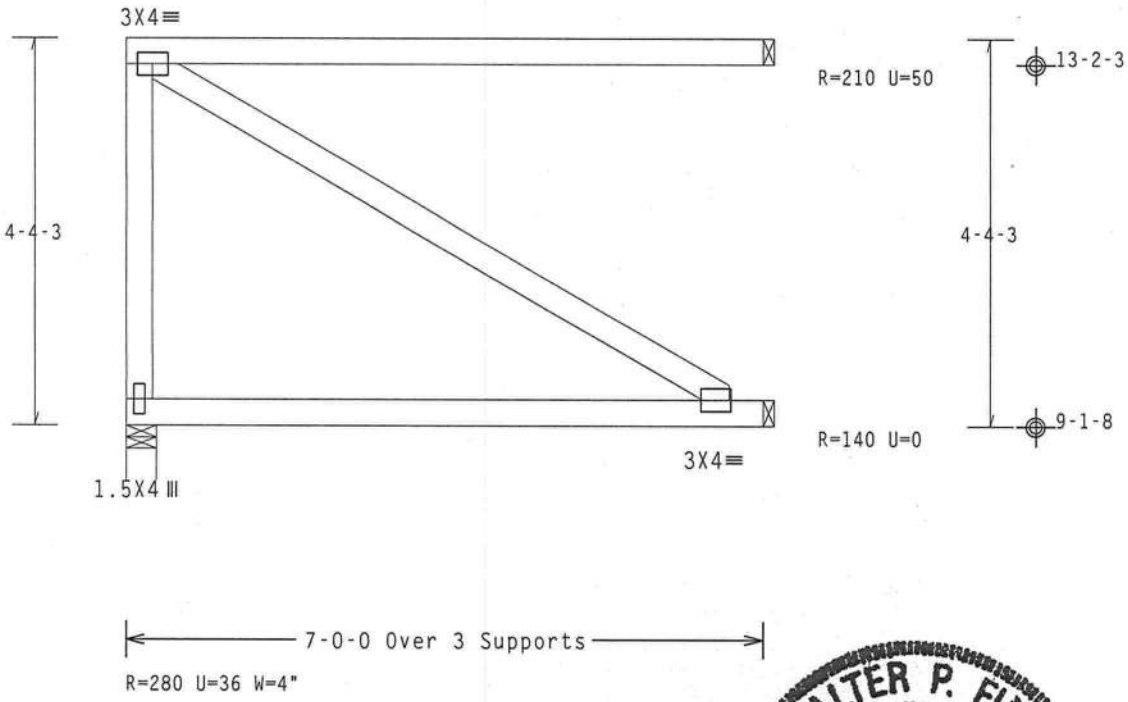

PLT TYP. Wave

Design Crit: FBC2010Res/TPI-2007(STD) 10.03. FT/RT=20%(0%)/0(0) QTY:

FL/-/4/-/-/R/- Scale =.5"/Ft.

ALPINE
ITW Building Components Group Inc.
Haines City, FL 33844
FL COA #0 278

WARNING READ AND FOLLOW ALL NOTES ON THIS SHEET!
IMPORTANT FURNISH THIS DESIGN TO ALL CONTRACTORS INCLUDING INSTALLERS.

Trusses require extreme care in fabricating, handling, shipping, installing and bracing. Refer to and follow the latest edition of BCSI (Building Component Safety Information, by TPI and WTCA) for safety practices prior to performing these functions. Installers shall provide temporary bracing per BCSI. Unless noted otherwise, top chord shall have properly attached structural sheathing and bottom chord shall have a properly attached rigid ceiling. Locations shown for permanent lateral restraint of webs shall have bracing installed per BCSI sections B3, B7 or B10, as applicable.

ITW Building Components Group Inc. (ITWBCG) shall not be responsible for any deviation from this drawing, any failure to build the truss in conformance with ANSI/TPI 1, or for handling, shipping, installing and bracing of trusses. Apply plates to each face of truss and position as shown above and on the Joint Details, unless noted otherwise. Refer to drawings 160A-Z for standard plate positions. A seal on this drawing or cover page listing this drawing, indicates acceptance of professional engineering responsibility solely for the design shown. The suitability and use of this design for any structure is the responsibility of the Building Designer per ANSI/TPI 1 Sec.2. For more information see: This job's general notes page: ITW-BCG: www.itwbcg.com; TPI: www.tpinst.org; WTCA: www.sbcindustry.com; ICC: www.iccsafe.org

WALTER P. FINN
LICENSE
No. 22839
STATE OF FLORIDA
PROFESSIONAL ENGINEER
05/16/2012

TC LL	20.0 PSF	REF	R487-- 81767
TC DL	10.0 PSF	DATE	05/16/12
BC DL	10.0 PSF	DRW	HCUSR487 12137041
BC LL	0.0 PSF	HC-ENG	JB/WPF
TOT.LD.	40.0 PSF	SEQN-	95142
DUR.FAC.	1.25		
SPACING	24.0"	JREF-	1UM4487_Z03

(12-089--BRYAN ZECHER Garrison Res. -- , ** - HJ3 4'2"15 Hip Jack Girder)

THIS DWG PREPARED FROM COMPUTER INPUT (LOADS & DIMENSIONS) SUBMITTED BY TRUSS MFR.

Top chord 2x4 SP #1
Bot chord 2x4 SP #1

Hipjack supports 3-0-0 setback jacks with no webs.

Deflection meets L/240 live and L/180 total load. Creep increase factor for dead load is 1.50.

120 mph wind, 15.00 ft mean hgt, ASCE 7-10, CLOSED bldg, Located anywhere in roof, RISK CAT II, EXP C, wind TC DL=5.0 psf, wind BC DL=5.0 psf. GCpi(+/-)=0.18

Wind loads and reactions based on MWFRS with additional C&C member design.

Provide (2) 16d common nails(0.162"x3.5"), toe nailed at Top chord.
Provide (2) 16d common nails(0.162"x3.5"), toe nailed at Bot chord.

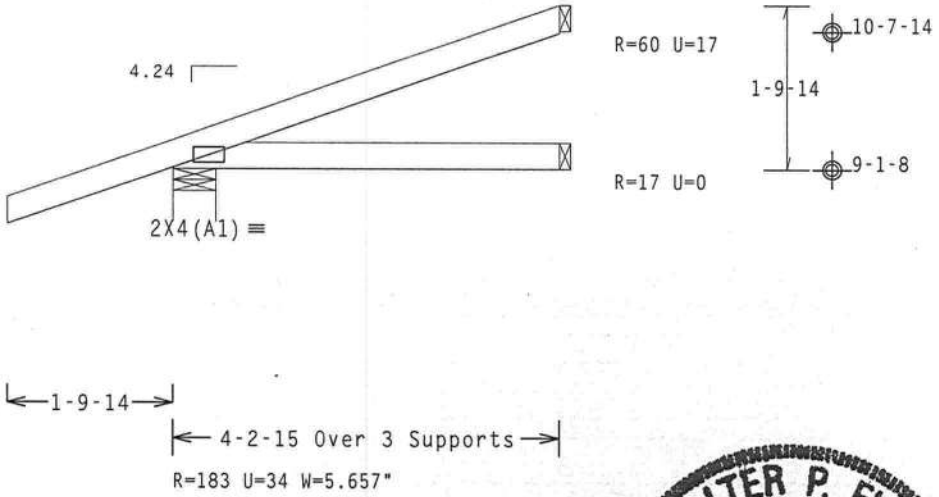

Design Crit: FBC2010Res/TPI-2007(STD) 10.03.11.0300.30 QTY:1 FL/-/4/-/-/R/-

PLT TYP. Wave FT/RT=20%(0%)/0(0) Scale =.5"/Ft.

ALPINE
ITW Building Components Group Inc.
Haines City, FL 33844
FL COA #0 278

WARNING READ AND FOLLOW ALL NOTES ON THIS SHEET!
IMPORTANT FURNISH THIS DESIGN TO ALL CONTRACTORS INCLUDING INSTALLERS.

Trusses require extreme care in fabricating, handling, shipping, installing and bracing. Refer to and follow the latest edition of BCSI (Building Component Safety Information, by TPI and WTCA) for safety practices prior to performing these functions. Installers shall provide temporary bracing per BCSI. Unless noted otherwise, top chord shall have properly attached structural sheathing and bottom chord shall have a properly attached rigid ceiling. Locations shown for permanent lateral restraint of webs shall have bracing installed per BCSI sections B3, B7 or B10, as applicable.

ITW Building Components Group Inc. (ITWBCG) shall not be responsible for any deviation from this design, any failure to build the truss in conformance with ANSI/TPI 1, or for handling, shipping, installing and bracing of trusses. Apply plates to each face of truss and position as shown above and on the Joint Details, unless noted otherwise. Refer to drawings 160A-Z for standard plate positions. A seal on this drawing or cover page listing this drawing, indicates acceptance of professional engineering responsibility solely for the design shown. The suitability and use of this design for any structure is the responsibility of the Building Designer per ANSI/TPI 1 Sec.2. For more information see: This job's general notes page; ITW-BCG: www.itwbcg.com; TPI: www.tpinst.org; WTCA: www.sbcindustry.com; ICC: www.iccsafe.org

WALTER P. FINN LICENSE No.22839 STATE OF FLORIDA PROFESSIONAL ENGINEER

05/16/2012

TC LL	20.0 PSF	REF	R487-- 81768
TC DL	10.0 PSF	DATE	05/16/12
BC DL	10.0 PSF	DRW	HCUSR487 12137055
BC LL	0.0 PSF	HC-ENG	JB/WPF
TOT.LD.	40.0 PSF	SEQN-	95268
DUR.FAC.	1.25		
SPACING	24.0"	JREF-	1UM4487_Z03

(12-089--BRYAN ZECHER Garrison Res. -- , ** - HJ3 4'2"15 Hip Jack Girder)

THIS DWG PREPARED FROM COMPUTER INPUT (LOADS & DIMENSIONS) SUBMITTED BY TRUSS MFR.

Top chord 2x4 SP #1
Bot chord 2x4 SP #1

Hipjack supports 3-0-0 setback jacks with no webs.

Deflection meets L/240 live and L/180 total load. Creep increase factor for dead load is 1.50.

120 mph wind, 15.00 ft mean hgt, ASCE 7-10, CLOSED bldg, Located anywhere in roof, RISK CAT II, EXP C, wind TC DL=5.0 psf, wind BC DL=5.0 psf. GCpi(+/-)=0.18

Wind loads and reactions based on MWFRS with additional C&C member design.

Provide (2) 16d common nails(0.162"x3.5"), toe nailed at Top chord.
Provide (2) 16d common nails(0.162"x3.5"), toe nailed at Bot chord.

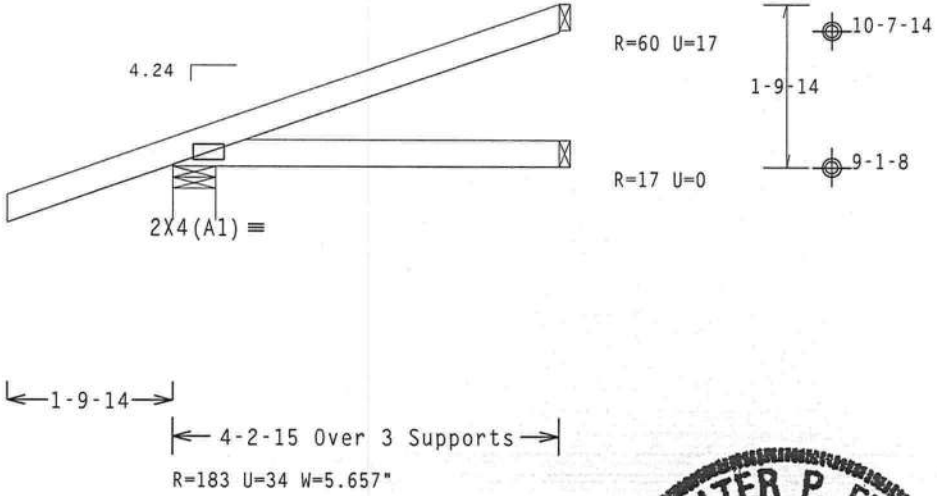

PLT TYP. Wave

Design Crit: FBC2010Res/TPI-2007(STD) 10.03.11.0209.20 QTY 1 FL/-/4/-/-/R/- Scale =.5"/Ft.
FT/RT=20%(0%)/0(0)

ALPINE
ITW Building Components Group Inc.
Haines City, FL 33844
FL COA #0 278

WARNING READ AND FOLLOW ALL NOTES ON THIS SHEET!
IMPORTANT FURNISH THIS DESIGN TO ALL CONTRACTORS INCLUDING INSTALLERS.

Trusses require extreme care in fabricating, handling, shipping, installing and bracing. Refer to and follow the latest edition of BCSI (Building Component Safety Information, by TPI and WTCA) for recommended practices prior to performing these functions. Installers shall provide temporary bracing per BCSI. Unless noted otherwise, top chord shall have properly attached structural sheathing and bottom chord shall have a properly attached rigid ceiling. Locations shown for permanent lateral restraint of webs shall have bracing installed per BCSI sections B3, B7 or B10, as applicable.

ITW Building Components Group Inc. (ITWBCG) shall not be responsible for any deviation from this design, any failure to build the truss in conformance with ANSI/TPI 1, or for handling, shipping, installing and bracing of trusses. Apply plates to each face of truss and position as shown above and on the Joint Details, unless noted otherwise. Refer to drawings 160A-Z for standard plate positions. A seal on this drawing or cover page listing this drawing, indicates acceptance of professional engineering responsibility solely for the design shown. The suitability and use of this design for any structure is the responsibility of the Building Designer per ANSI/TPI 1 Sec.2. For more information see: This job's general notes page; ITW-BCG: www.itwbcg.com; TPI: www.tpinst.org; WTCA: www.sbcindustry.com; ICC: www.iccsafe.org

WALTER P. FINN
LICENSE
No. 22839
STATE OF FLORIDA
PROFESSIONAL ENGINEER

05/16/2012

TC LL	20.0 PSF	REF	R487-- 81769
TC DL	10.0 PSF	DATE	05/16/12
BC DL	10.0 PSF	DRW	HCUSR487 12137056
BC LL	0.0 PSF	HC-ENG	JB/WPF
TOT.LD.	40.0 PSF	SEQN-	95456
DUR.FAC.	1.25		
SPACING	24.0"	JREF-	1UM4487_Z03

(12-089--BRYAN ZECHER Garrison Res. -- , ** - HJ5 7'0"14 Hip Jack Girder)

THIS DWG PREPARED FROM COMPUTER INPUT (LOADS & DIMENSIONS) SUBMITTED BY TRUSS MFR.

Top chord 2x4 SP #1
Bot chord 2x4 SP #1

Hipjack supports 5-0-0 setback jacks with no webs.

Deflection meets L/240 live and L/180 total load. Creep increase factor for dead load is 1.50.

120 mph wind, 15.00 ft mean hgt, ASCE 7-10, CLOSED bldg, Located anywhere in roof, RISK CAT II, EXP C, wind TC DL=5.0 psf, wind BC DL=5.0 psf. GCpi(+/-)=0.18

Wind loads and reactions based on MWFRS with additional C&C member design.

Provide (2) 16d common nails(0.162"x3.5"), toe nailed at Top chord.
Provide (2) 16d common nails(0.162"x3.5"), toe nailed at Bot chord.

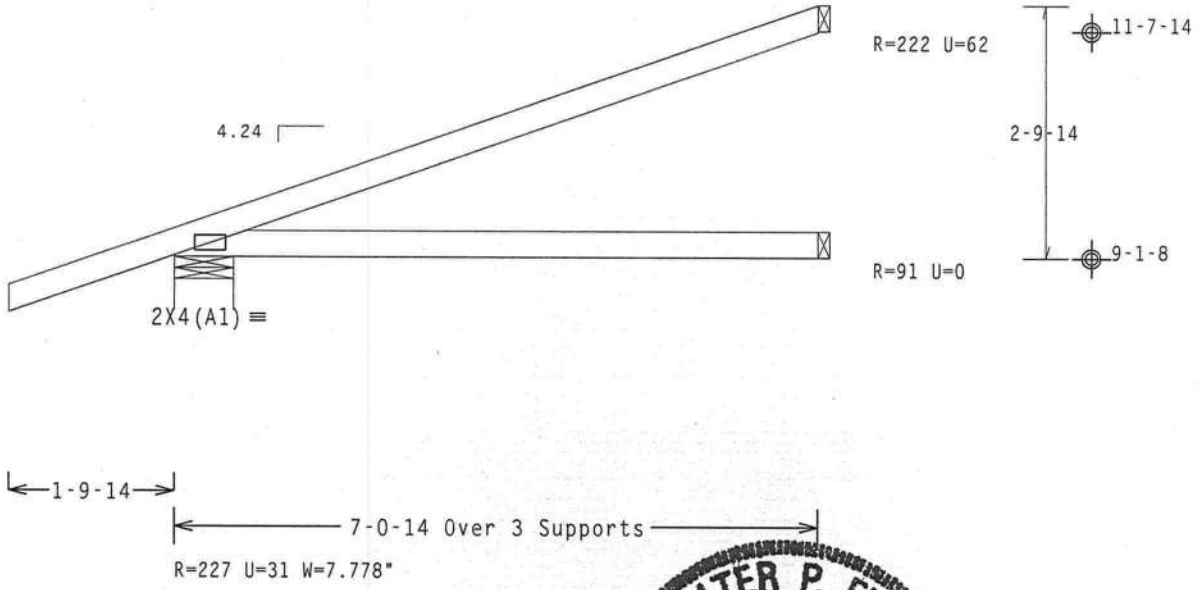

Design Crit: FBC2010Res/TPI-2007(STD) 10.03 11.0209 20 QTY 2 FL/-/4/-/-/R/-

PLT TYP. Wave

FT/RT=20%(0%)/0(0)

Scale =.5"/Ft.

ALPINE
ITW Building Components Group Inc.
Haines City, FL 33844
FL COA #0 278

WARNING READ AND FOLLOW ALL NOTES ON THIS SHEET!
IMPORTANT FURNISH THIS DESIGN TO ALL CONTRACTORS INCLUDING INSTALLERS.

Trusses require extreme care in fabricating, handling, shipping, installing and bracing. Refer to and follow the latest edition of BCSI (Building Component Safety Information, by TPI and WTCA) for safety practices prior to performing these functions. Installers shall provide temporary bracing per BCSI. Unless noted otherwise, top chord shall have properly attached structural sheathing and bot chord shall have a properly attached rigid ceiling. Locations shown for permanent lateral restrai shall have bracing installed per BCSI sections B3, B7 or B10, as applicable.

ITW Building Components Group Inc. (ITWBCG) shall not be responsible for any deviation from any failure to build the truss in conformance with ANSI/TPI 1, or for handling, shipping, insta bracing of trusses. Apply plates to each face of truss and position as shown above and on the J Details, unless noted otherwise. Refer to drawings 160A-Z for standard plate positions. A seal drawing or cover page listing this drawing, indicates acceptance of professional engineering responsibility solely for the design shown. The suitability and use of this design for any structure the responsibility of the Building Designer per ANSI/TPI 1 Sec.2. For more information see: This job's general notes page; ITW-BCG: www.itwbcg.com; TPI: www.tpinst.org; WTCA: www.sbcindustry.com; ICC: www.iccsafe.org

WALTER P. FINN
LICENSE
No. 22839
STATE OF FLORIDA
PROFESSIONAL ENGINEER

05/16/2012

TC LL	20.0 PSF	REF	R487-- 81770
TC DL	10.0 PSF	DATE	05/16/12
BC DL	10.0 PSF	DRW	HCUSR487 12137057
BC LL	0.0 PSF	HC-ENG	JB/WPF
TOT.LD.	40.0 PSF	SEQN-	95279
DUR.FAC.	1.25		
SPACING	24.0"	JREF-	1UM4487_Z03

(12-089--BRYAN ZECHER Garrison Res. -- , ** - HJ5S 7'0"14 Hip Jack Girder)

THIS DWG PREPARED FROM COMPUTER INPUT (LOADS & DIMENSIONS) SUBMITTED BY TRUSS MFR.

Top chord 2x4 SP #1
Bot chord 2x4 SP #1
Webs 2x4 SP #3

Left end vertical not exposed to wind pressure.

Roof overhang supports 2.00 psf soffit load.

Hipjack supports 5-0-0 setback jacks with no webs.

Deflection meets L/240 live and L/180 total load. Creep increase factor for dead load is 1.50.

120 mph wind, 15.00 ft mean hgt, ASCE 7-10, CLOSED bldg, Located anywhere in roof, RISK CAT II, EXP C, wind TC DL=5.0 psf, wind BC DL=5.0 psf. GCpi(+/-)=0.18

Wind loads and reactions based on MWFRS with additional C&C member design.

Truss passed check for 20 psf additional bottom chord live load in areas with 42"-high x 24"-wide clearance.

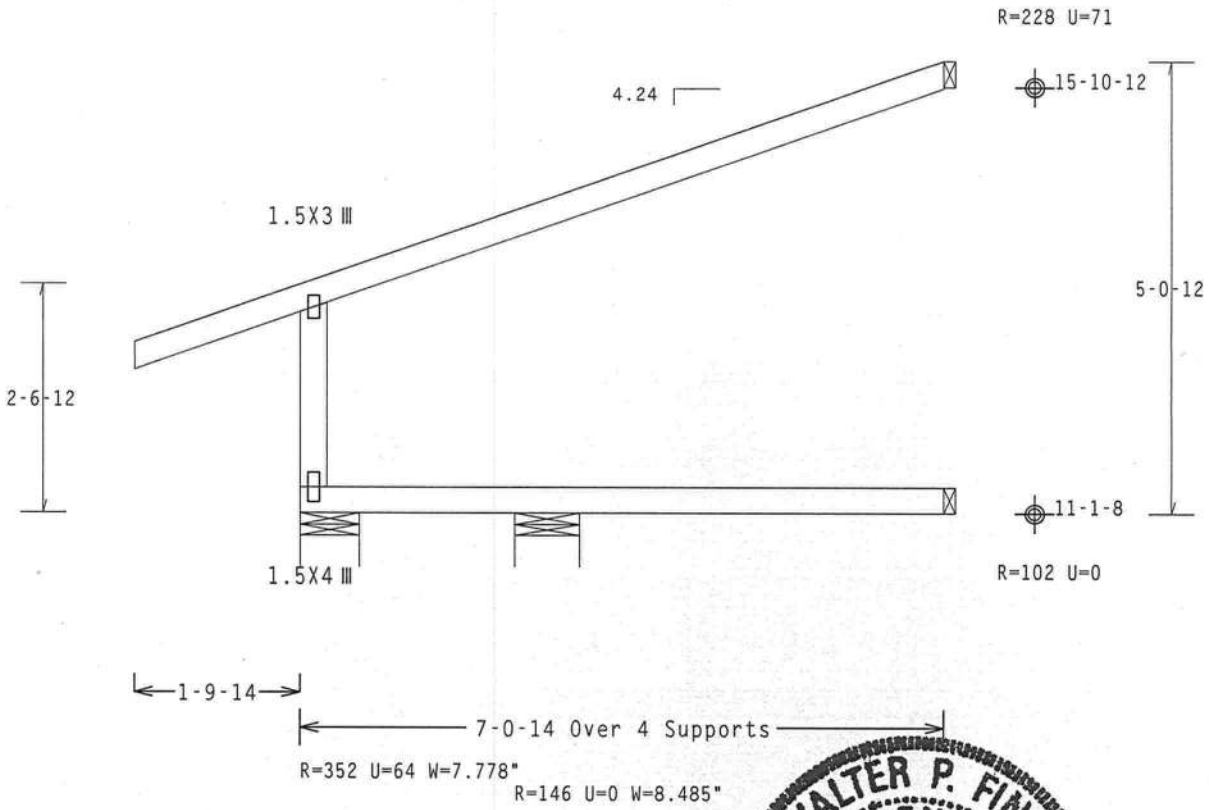

Design Crit: FBC2010Res/TPI-2007(STD)
FT/RT=20%(0%)/0(0)

PLT TYP. Wave

10.03.11.0209.20 QTY:2 FL/-/4/-/-/R/- Scale =.5"/Ft.

ALPINE
ITW Building Components Group Inc.
Haines City, FL 33844
FL COA #0 278

WARNING READ AND FOLLOW ALL NOTES ON THIS SHEET!
IMPORTANT FURNISH THIS DESIGN TO ALL CONTRACTORS INCLUDING INSTALLERS.

Trusses require extreme care in fabricating, handling, shipping, installing and bracing. Refer to and follow the latest edition of BCSI (Building Component Safety Information, by TPI and WTCA) for safety practices prior to performing these functions. Installers shall provide temporary bracing per BCSI. Unless noted otherwise, top chord shall have properly attached structural sheathing and bottom chord shall have a properly attached rigid ceiling. Locations shown for permanent lateral restraint of webs shall have bracing installed per BCSI sections B3, B7 or B10, as applicable.

ITW Building Components Group Inc. (ITWBCG) shall not be responsible for any deviation from this design, any failure to build the truss in conformance with ANSI/TPI 1, or for handling, shipping, installing and bracing of trusses. Apply plates to each face of truss and position as shown above and on the Joint Details, unless noted otherwise. Refer to drawings 160A-Z for standard plate positions. A seal on this drawing or cover page listing this drawing, indicates acceptance of professional engineering responsibility solely for the design shown. The suitability and use of this design for any structure is the responsibility of the Building Designer per ANSI/TPI 1 Sec.2. For more information see: This job's general notes page; ITW-BCG: www.itwbcg.com; TPI: www.tpinst.org; WTCA: www.sbcindustry.com; ICC: www.iccsafe.org

WALTER P. FINN
LICENSE
No.22839
STATE OF FLORIDA
PROFESSIONAL ENGINEER

05/16/2012

TC LL	20.0 PSF	REF	R487-- 81771
TC DL	10.0 PSF	DATE	05/16/12
BC DL	10.0 PSF	DRW	HCUSR487 12137058
BC LL	0.0 PSF	HC-ENG	JB/WPF
TOT.LD.	40.0 PSF	SEQN-	95344
DUR.FAC.	1.25		
SPACING	24.0"	JREF-	1UM4487_Z03

(12-089--BRYAN ZECHER Garrison Res. -- , ** - HJ7 9'10"13 Hip Jack Girder)

THIS DWG PREPARED FROM COMPUTER INPUT (LOADS & DIMENSIONS) SUBMITTED BY TRUSS MFR.

Top chord 2x4 SP #1
Bot chord 2x4 SP #1
Webs 2x4 SP #3

Hipjack supports 7-0-0 setback jacks with no webs.

Deflection meets L/240 live and L/180 total load. Creep increase factor for dead load is 1.50.

120 mph wind, 15.00 ft mean hgt, ASCE 7-10, CLOSED bldg, Located anywhere in roof, RISK CAT II, EXP C, wind TC DL=5.0 psf, wind BC DL=5.0 psf. GCpi(+/-)=0.18

Wind loads and reactions based on MWFRS with additional C&C member design.

Provide (2) 16d common nails(0.162"x3.5"), toe nailed at Top chord.
Provide (3) 16d common nails(0.162"x3.5"), toe nailed at Bot chord.

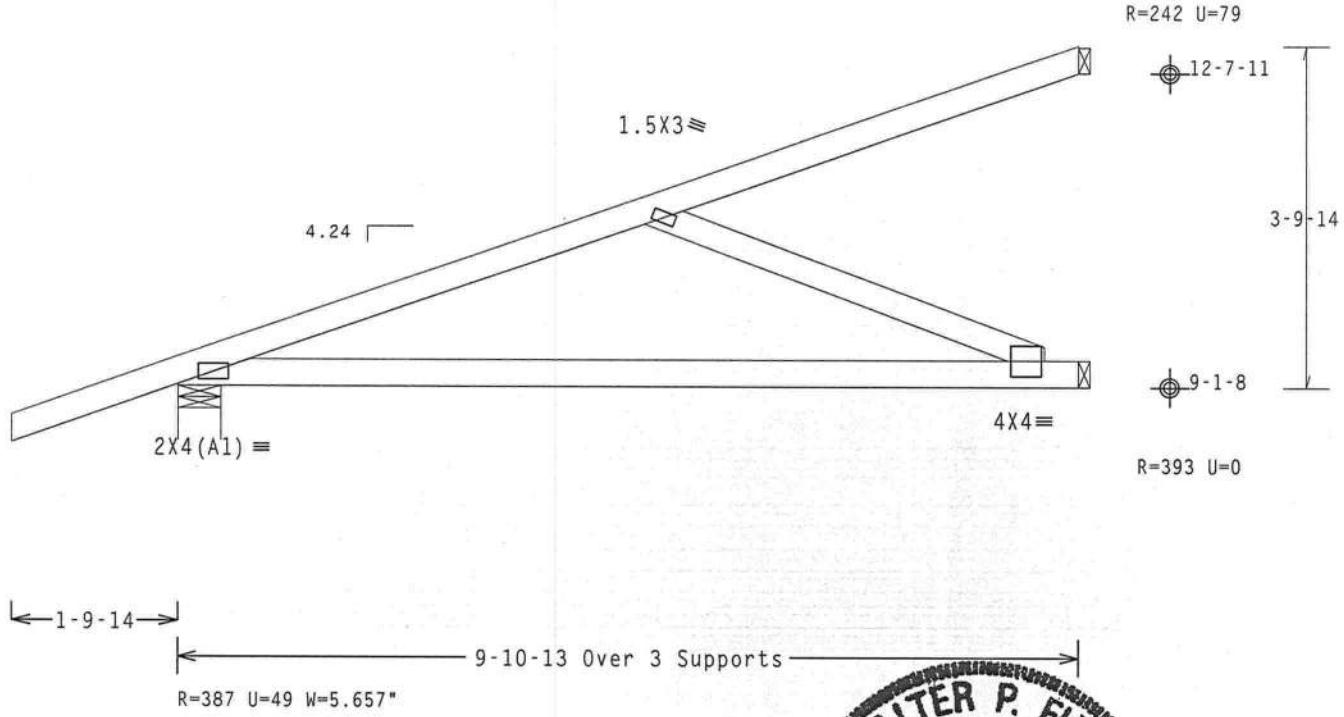

PLT TYP. Wave

Design Crit: FBC2010Res/TPI-2007(STD
FT/RT=20%(0%)/0(0)

10.03.11 0209.00 QTY 4

FL/-/4/-/-/R/-

Scale =.5"/Ft.

ALPINE
ITW Building Components Group Inc.
Haines City, FL 33844
FL COA #0 278

WARNING READ AND FOLLOW ALL NOTES ON THIS SHEET!
IMPORTANT FURNISH THIS DESIGN TO ALL CONTRACTORS INCLUDING INSTALLERS.

Trusses require extreme care in fabricating, handling, shipping, installing and bracing. Refer to and follow the latest edition of BCSI (Building Component Safety Information, by TPI and WTCA) for safety practices prior to performing these functions. Installers shall provide temporary bracing per BCSI. Unless noted otherwise, top chord shall have properly attached structural sheathing and bottom chord shall have a properly attached rigid ceiling. Locations shown for permanent lateral restraint of webs shall have bracing installed per BCSI sections B3, B7 or B10, as applicable.

ITW Building Components Group Inc. (ITWBCG) shall not be responsible for any deviation from this design, any failure to build the truss in conformance with ANSI/TPI 1, or for handling, shipping, installing and bracing of trusses. Apply plates to each face of truss and position as shown above and on the Joint Details, unless noted otherwise. Refer to drawings 160A-Z for standard plate positions. A seal on this drawing or cover page listing this drawing, indicates acceptance of professional engineering responsibility solely for the design shown. The suitability and use of this design for any structure is the responsibility of the Building Designer per ANSI/TPI 1 Sec.2. For more information see: This job's general notes page; ITW-BCG: www.itwbcg.com; TPI: www.tpinst.org; WTCA: www.sbcindustry.com; ICC: www.iccsafe.org

WALTER P. FINN
LICENSE
No.22839
STATE OF FLORIDA
PROFESSIONAL ENGINEER
05/16/2012

TC LL	20.0 PSF	REF	R487-- 81772
TC DL	10.0 PSF	DATE	05/16/12
BC DL	10.0 PSF	DRW	HCUSR487 12137064
BC LL	0.0 PSF	HC-ENG	JB/WPF
TOT.LD.	40.0 PSF	SEQN-	95792
DUR.FAC.	1.25		
SPACING	24.0"	JREF-	1UM4487_Z03

(12-089--BRYAN ZECHER Garrison Res. -- , ** - HJ7T 9'10"13 Hip Jack Girder)

THIS DWG PREPARED FROM COMPUTER INPUT (LOADS & DIMENSIONS) SUBMITTED BY TRUSS MFR.

Top chord 2x4 SP #1
Bot chord 2x4 SP #1
Webs 2x4 SP #3

Roof overhang supports 2.00 psf soffit load.

Hipjack supports 7-0-0 setback jacks with no webs.

Provide (2) 16d common nails(0.162"x3.5"), toe nailed at Top chord.
Provide (3) 16d common nails(0.162"x3.5"), toe nailed at Bot chord.

Laterally brace Bottom Chord above filler at 24" oc, including a lateral brace at chord ends.

120 mph wind, 15.00 ft mean hgt, ASCE 7-10, CLOSED bldg, Located anywhere in roof, RISK CAT II, EXP C, wind TC DL=5.0 psf, wind BC DL=5.0 psf. GCpi(+/-)=0.18

Wind loads and reactions based on MWFRS with additional C&C member design.

Deflection meets L/240 live and L/180 total load. Creep increase factor for dead load is 1.50.

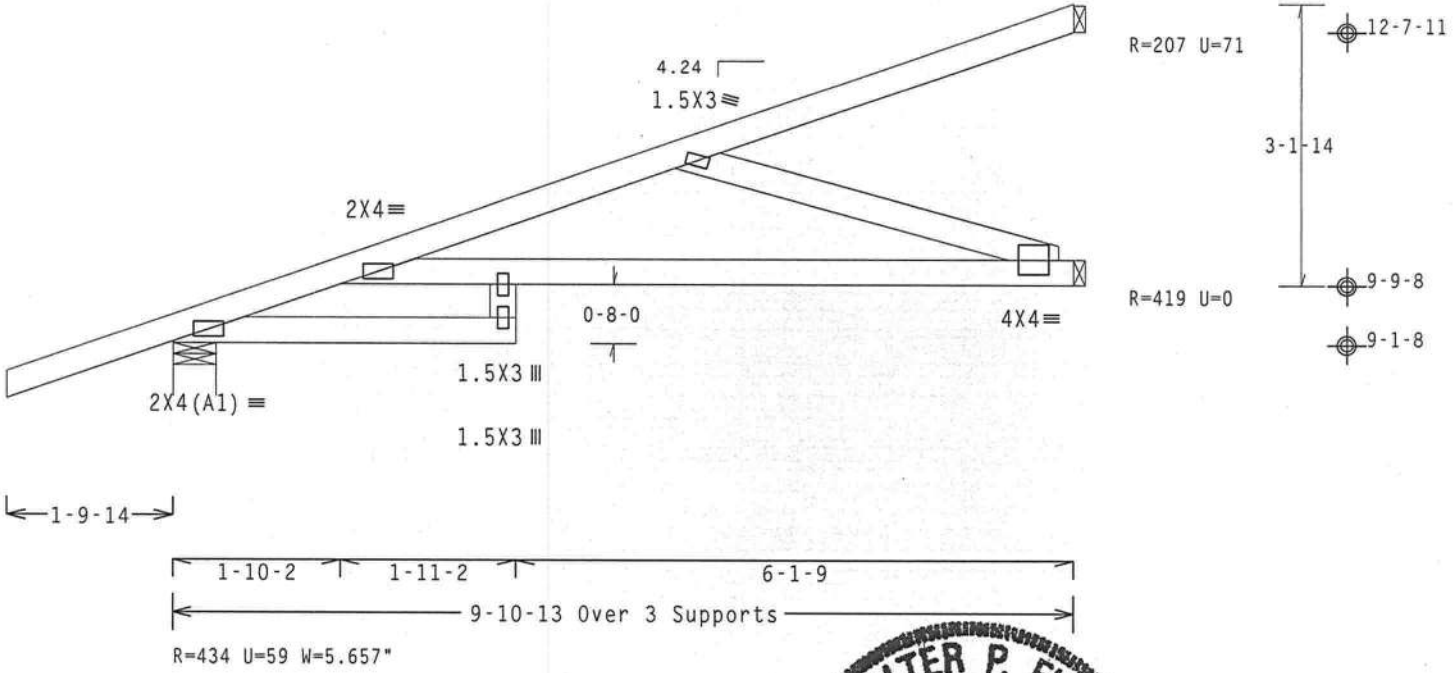

Design Crit: FBC2010Res/TPI-2007(STD)
FT/RT=20%(0%)/0(0)

PLT TYP. Wave

10.03.11.0209.20 QTY:1

FL/-/4/-/-/R/-

Scale =.5"/Ft.

ALPINE
ITW Building Components Group Inc.
Haines City, FL 33844
FL COA #0 278

WARNING READ AND FOLLOW ALL NOTES ON THIS SHEET!
IMPORTANT FURNISH THIS DESIGN TO ALL CONTRACTORS INCLUDING INSTALLERS.

Trusses require extreme care in fabricating, handling, shipping, installing and bracing. Refer to and follow the latest edition of BCSI (Building Component Safety Information, by TPI and WTCA) for recommended practices prior to performing these functions. Installers shall provide temporary bracing per BCSI. Unless noted otherwise, top chord shall have properly attached structural sheathing and bottom chord shall have a properly attached rigid ceiling. Locations shown for permanent lateral restraint of webs shall have bracing installed per BCSI sections B3, B7 or B10, as applicable.

ITW Building Components Group Inc. (ITWBCG) shall not be responsible for any deviation from this design, any failure to build the truss in conformance with ANSI/TPI 1, or for handling, shipping, installing and bracing of trusses. Apply plates to each face of truss and position as shown above and on the Joint Details, unless noted otherwise. Refer to drawings 160A-Z for standard plate positions. A seal on this drawing or cover page listing this drawing, indicates acceptance of professional engineering responsibility solely for the design shown. The suitability and use of this design for any structure is the responsibility of the Building Designer per ANSI/TPI 1 Sec.2. For more information see: This job's general notes page; ITW-BCG: www.itwbcg.com; TPI: www.tpinst.org; WTCA: www.sbcindustry.com; ICC: www.iccsafe.org

WALTER P. FINN
LICENSE
No.22839
STATE OF FLORIDA
PROFESSIONAL ENGINEER

05/16/2012

TC LL	20.0 PSF	REF	R487-- 81773
TC DL	10.0 PSF	DATE	05/16/12
BC DL	10.0 PSF	DRW	HCUSR487 12137059
BC LL	0.0 PSF	HC-ENG	JB/WPF
TOT.LD.	40.0 PSF	SEQN-	95501
DUR.FAC.	1.25		
SPACING	24.0"	JREF-	1UM4487_Z03

THIS DWG PREPARED FROM COMPUTER INPUT (LOADS & DIMENSIONS) SUBMITTED BY TRUSS MFR.

Top chord 2x4 SP #1
Bot chord 2x4 SP #1
Webs 2x4 SP #3

120 mph wind, 15.00 ft mean hgt, ASCE 7-10, CLOSED bldg, Located anywhere in roof, RISK CAT II, EXP C, wind TC DL=5.0 psf, wind BC DL=5.0 psf. GCpi(+/-)=0.18

Wind loads and reactions based on MWFRS with additional C&C member design.

These support conditions used at bearings indicated
(H1) = Simpson LU28 w/ (1)2x8 SP #1 Dense supporting member.
(8) 0.148"x3" nails into supporting member,
(6) 0.148"x1.5" nails into supported member.

Deflection meets L/240 live and L/180 total load. Creep increase factor for dead load is 1.50.

Special loads
------(Lumber Dur.Fac.=1.25 / Plate Dur.Fac.=1.25)
TC- From 62 plf at 0.00 to 62 plf at 6.00
BC- From 20 plf at 0.00 to 20 plf at 2.06
BC- From 10 plf at 2.06 to 10 plf at 6.00
BC- 438.33 lb Conc. Load at 2.06
BC- 387.87 lb Conc. Load at 4.06

Right end vertical not exposed to wind pressure.

H = recommended connection based on manufacturer tested capacities and calculations. Conditions may exist that require different connections than indicated. Refer to manufacturer publication for additional information.

Bottom chord checked for 10.00 psf non-concurrent live load.

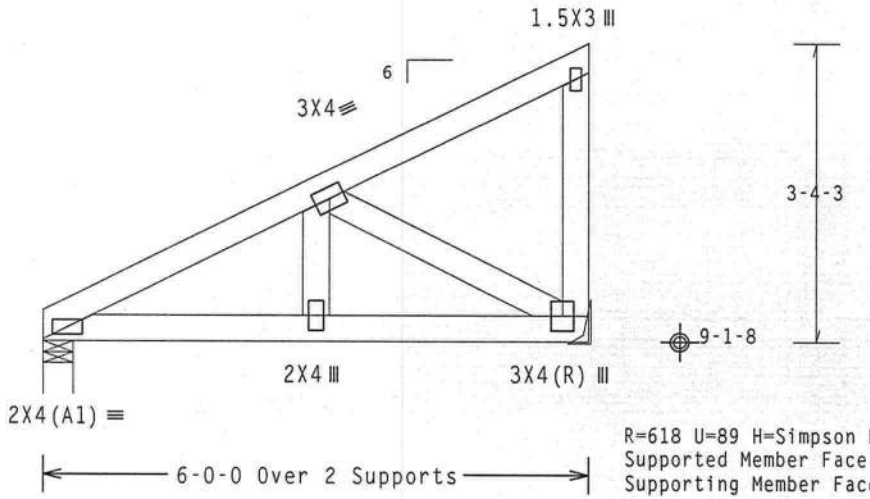

R=618 U=89 H=Simpson LUS24
Supported Member Face: (2) 0.148"x3" nails
Supporting Member Face: (4) 0.148"x3" nails
Supporting Member : (1) 2x4 SP #1

R=663 U=81 W=4"

Design Crit: FBC2010Res/TPI-2007(STD)
FT/RT=20%(0%)/0(0) 10.03.11.0209.20 QTY 1 FL/-/4/-/-/R/- Scale =.5"/Ft.

PLT TYP. Wave

ALPINE
ITW Building Components Group Inc.
Haines City, FL 33844
FL COA #0 278

WARNING READ AND FOLLOW ALL NOTES ON THIS SHEET!
IMPORTANT FURNISH THIS DESIGN TO ALL CONTRACTORS INCLUDING INSTALLERS.

Trusses require extreme care in fabricating, handling, shipping, installing and bracing. Refer to and follow the latest edition of BCSI (Building Component Safety Information, by TPI and WTCA) for safety practices prior to performing these functions. Installers shall provide temporary bracing per BCSI. Unless noted otherwise, top chord shall have properly attached structural sheathing and bottom chord shall have a properly attached rigid ceiling. Locations shown for permanent lateral restraint of webs shall have bracing installed per BCSI sections B3, B7 or B10, as applicable.

ITW Building Components Group Inc. (ITWBCG) shall not be responsible for any deviation from this drawing, any failure to build the truss in conformance with ANSI/TPI 1, or for handling, shipping, installing and bracing of trusses. Apply plates to each face of truss and position as shown above and on the Joint Details, unless noted otherwise. Refer to drawings 160A-Z for standard plate positions. A seal on this drawing or cover page listing this drawing, indicates acceptance of professional engineering responsibility solely for the design shown. The suitability and use of this design for any structure is the responsibility of the Building Designer per ANSI/TPI 1 Sec.2. For more information see: This job's general notes page; ITW-BCG: www.itwbcg.com; TPI: www.tpinst.org; WTCA: www.sbcindustry.com; ICC: www.iccsafe.org

WALTER P. FINN LICENSE No.22839 STATE OF FLORIDA PROFESSIONAL ENGINEER
05/16/2012

TC LL	20.0 PSF	REF	R487-- 81774
TC DL	10.0 PSF	DATE	05/16/12
BC DL	10.0 PSF	DRW	HCUSR487 12137060
BC LL	0.0 PSF	HC-ENG	JB/WPF
TOT.LD.	40.0 PSF	SEQN-	95466
DUR.FAC.	1.25		
SPACING	24.0"	JREF-	1UM4487_Z03

Top chord 2x4 SP #1
Bot chord 2x8 SP #1 Dense
Webs 2x4 SP #3 :W5 2x4 SP #1:

120 mph wind, 15.00 ft mean hgt, ASCE 7-10, CLOSED bldg, not located within 9.00 ft from roof edge, RISK CAT II, EXP C, wind TC DL=5.0 psf, wind BC DL=5.0 psf. GCpi(+/-)=0.18

Wind loads and reactions based on MWFRS with additional C&C member design.

Roof overhang supports 2.00 psf soffit load.

H = recommended connection based on manufacturer tested capacities and calculations. Conditions may exist that require different connections than indicated. Refer to manufacturer publication for additional information.

Bottom chord checked for 10.00 psf non-concurrent live load.

Special loads
------(Lumber Dur.Fac.=1.25 / Plate Dur.Fac.=1.25)
TC- From 62 plf at -1.33 to 62 plf at 6.00
TC- From 62 plf at 6.00 to 62 plf at 11.00
BC- From 4 plf at -1.33 to 4 plf at 0.00
BC- From 20 plf at 0.00 to 20 plf at 7.06
BC- From 10 plf at 7.06 to 10 plf at 11.00
PLB- 3364.37 lb Conc. Load at (7.06, 9.16)
PLB- 1565.50 lb Conc. Load at (9.06, 9.16)
PLB- 617.81 lb Conc. Load at (9.81, 9.16)

Right end vertical not exposed to wind pressure.

(H1) = (J) Hanger not calculated (2)2x6 SP SS supporting member.

In lieu of structural panels use purlins to brace all flat TC @ 24" OC.

Deflection meets L/240 live and L/180 total load. Creep increase factor for dead load is 1.50.

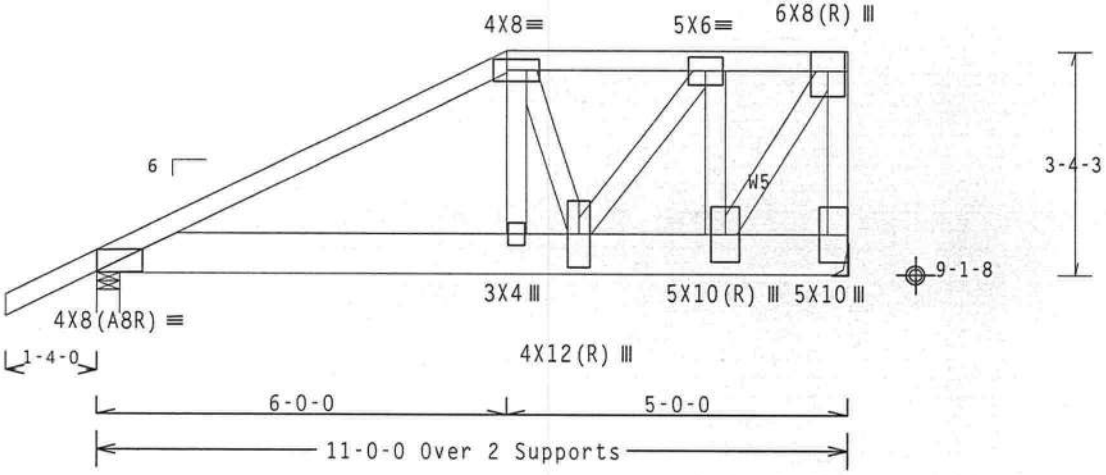

R=2115 U=260 W=4"

R=4388 U=528 [illegible] HUS28
Supported [illegible] 0.148"x3" nails
Support [illegible] 148"x3" nails
Suppo[illegible] Dense

PLT TYP. Wave

Design Crit: FBC2010Res/TPI-2007(STD) [illegible]
FT/RT=20%(0%)/0(0) 10.03.[illegible] QTY: FL/-/4/-/-/R/- Scale =.375"/Ft.

ALPINE
ITW Building Components Group Inc.
Haines City, FL 33844
FL COA #0 278

WARNING READ AND FOLLOW ALL NOTES ON THIS SHEET!
IMPORTANT FURNISH THIS DESIGN TO ALL CONTRACTORS INCLUDING INSTALLERS.

Trusses require extreme care in fabricating, handling, shipping, installing and bracing. Refer to and follow the latest edition of BCSI (Building Component Safety Information, by TPI and WTCA) for safety practices prior to performing these functions. Installers shall provide temporary bracing per BCSI. Unless noted otherwise, top chord shall have properly attached structural sheathing and bottom chord shall have a properly attached rigid ceiling. Locations shown for permanent lateral restraint of web members shall have bracing installed per BCSI sections B3, B7 or B10, as applicable.

ITW Building Components Group Inc. (ITWBCG) shall not be responsible for any deviation from this design, any failure to build the truss in conformance with ANSI/TPI 1, or for handling, shipping, installation and bracing of trusses. Apply plates to each face of truss and position as shown above and on the Joint Details, unless noted otherwise. Refer to drawings 160A-Z for standard plate positions. A seal on this drawing or cover page listing this drawing, indicates acceptance of professional engineering responsibility solely for the design shown. The suitability and use of this design for any structure is the responsibility of the Building Designer per ANSI/TPI 1 Sec.2. For more information see: This job's general notes page; ITW-BCG: www.itwbcg.com; TPI: www.tpinst.org; WTCA: www.sbcindustry.com; ICC: www.iccsafe.org

WALTER P. FINN LICENSE No.22839 STATE OF FLORIDA PROFESSIONAL ENGINEER
05/16/2012

TC LL	20.0 PSF	REF	R487-- 81775
TC DL	10.0 PSF	DATE	05/16/12
BC DL	10.0 PSF	DRW	HCUSR487 12137061
BC LL	0.0 PSF	HC-ENG	JB/WPF
TOT.LD.	40.0 PSF	SEQN-	95598
DUR.FAC.	1.25		
SPACING	24.0"	JREF-	1UM4487_Z03

CLB WEB BRACE SUBSTITUTION

THIS DETAIL IS TO BE USED WHEN CONTINUOUS LATERAL BRACING (CLB) IS SPECIFIED ON A TRUSS DESIGN BUT AN ALTERNATIVE WEB BRACING METHOD IS DESIRED.

NOTES:

THIS DETAIL IS ONLY APPLICABLE FOR CHANGING THE SPECIFIED CLB SHOWN ON SINGLE PLY SEALED DESIGNS TO T-BRACING OR SCAB BRACING.

ALTERNATIVE BRACING SPECIFIED IN CHART BELOW MAY BE CONSERVATIVE. FOR MINIMUM ALTERNATIVE BRACING, RE-RUN DESIGN WITH APPROPRIATE BRACING.

WEB MEMBER SIZE	SPECIFIED CLB BRACING	ALTERNATIVE BRACING T OR L-BRACE	ALTERNATIVE BRACING SCAB BRACE
2X3 OR 2X4	1 ROW	2X4	1-2X4
2X3 OR 2X4	2 ROWS	2X6	2-2X4
2X6	1 ROW	2X4	1-2X6
2X6	2 ROWS	2X6	2-2X4(*)
2X8	1 ROW	2X6	1-2X8
2X8	2 ROWS	2X6	2-2X6(*)

T-BRACE, L-BRACE AND SCAB BRACE TO BE SAME SPECIES AND GRADE OR BETTER THAN WEB MEMBER UNLESS SPECIFIED OTHERWISE ON ENGINEER'S SEALED DESIGN.

(*) CENTER SCAB ON WIDE FACE OF WEB. APPLY (1) SCAB TO EACH FACE OF WEB.

T-BRACING OR L-BRACING:

APPLY TO EITHER SIDE OF WEB NARROW FACE.
ATTACH WITH 10d BOX OR GUN
(0.128"x 3.",MIN) NAILS.
AT 6" O.C.
BRACE IS A
MINIMUM 80% OF WEB
MEMBER LENGTH

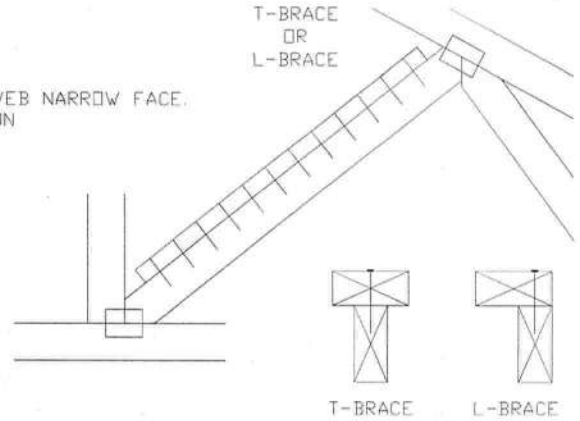

SCAB BRACING:

APPLY SCAB(S) TO WIDE FACE OF WEB.
NO MORE THAN (1) SCAB PER FACE.
ATTACH WITH 10d BOX OR GUN
(0.128"x 3.",MIN) NAILS.
AT 6" O.C.
BRACE IS A MINIMUM
80% OF WEB MEMBER LENGTH

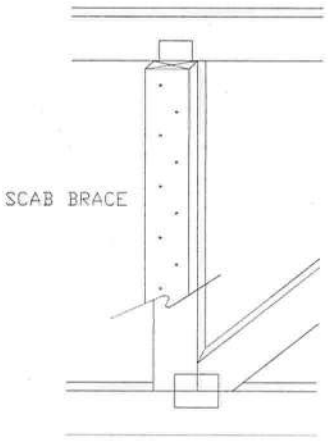

WALTER P. FINN
LICENSE
No. 22839
STATE OF FLORIDA
PROFESSIONAL ENGINEER
05/16/2012

TW
Building Components Group Inc.
Earth City, MO 63045

WARNING READ AND FOLLOW ALL NOTES ON THIS SHEET!
Trusses require extreme care in fabricating, handling, shipping, installing and bracing. Refer to and follow BCSI (Building Component Safety Information, by TPI and WTCA) for safety practices pertinent to performing these functions. Installers shall provide temporary bracing per BCSI. Unless noted otherwise, top chord shall have properly attached structural panels and bottom chord shall have a properly attached rigid ceiling. Locations shown for permanent lateral restraint of webs shall have bracing installed per BCSI sections B3 & B7. See this job's general notes page for more information.

IMPORTANT FURNISH COPY OF THIS DESIGN TO INSTALLATION CONTRACTOR.
ITW Building Components Group Inc. (ITWBCG) shall not be responsible for any deviation from this design, any failure to build the truss in conformance with TPI, or fabricating, handling, shipping, installing & bracing of trusses. ITWBCG connector plates are made of 20/18/16GA (W,H/S/K) ASTM grade 37/40/60 (K/W/H,S) galv. steel. Apply plates to each face of truss, positioned as shown above and on Joint Details.
A seal on this drawing or cover page indicates acceptance and professional engineering responsibility solely for the truss component design shown. The suitability and use of this component for any building is the responsibility of the Building Designer per ANST/TPI 1 Sec. 2.
ITW-BCG: www.itwbcg.com; TPI: www.tpinst.com; WTCA: www.sbcindustry.com; ICC: www.iccsafe.org

TC LL	PSF	REF CLB SUBST.
TC DL	PSF	DATE 1/1/09
BC DL	PSF	DRWG BRCLBSUB0109
BC LL	PSF	
TOT. LD.	PSF	
DUR. FAC.		
SPACING		

NAIL SPACING DETAIL

MINIMUM SPACING FOR SINGLE BLOCK IS SHOWN. DOUBLE NAIL SPACINGS AND STAGGER NAILING FOR TWO BLOCKS. GREATER SPACING MAY BE REQUIRED TO AVOID SPLITTING.

BLOCK LOCATION, SIZE, LENGTH,GRADE AND TOTAL NUMBER AND TYPE OF NAILS ARE TO BE SPECIFIED ON SEALED DESIGN REFERENCING THIS DETAIL.

LOAD PERPENDICULAR TO GRAIN
A - EDGE DISTANCE AND SPACING BETWEEN STAGGERED ROWS OF NAILS (6 NAIL DIAMETERS)
B - SPACING OF NAILS IN A ROW (12 NAIL DIAMETERS)
C - END DISTANCE (15 NAIL DIAMETERS)

LOAD PARALLEL TO GRAIN
A - EDGE DISTANCE (6 NAIL DIAMETERS)
C - SPACING OF NAILS IN A ROW AND END DISTANCE (15 NAIL DIAMETERS)
D - SPACING BETWEEN STAGGERED ROWS OF NAILS (7 1/2 NAIL DIAMETERS)

IF NAIL HOLES ARE PREBORED, SOME SPACING MAY BE REDUCED BY THE AMOUNTS GIVEN BELOW:
* SPACING MAY BE REDUCED BY 50%
** SPACING MAY BE REDUCED BY 33%

MINIMUM NAIL SPACING DISTANCES

NAIL TYPE	DISTANCES A	B*	C**	D
8d BOX (0.113"X 2.5",MIN)	3/4"	1 3/8"	1 3/4"	7/8"
10d BOX (0.128"X 3.",MIN)	7/8"	1 5/8"	2"	1"
12d BOX (0.128"X 3.25",MIN)	7/8"	1 5/8"	2"	1"
16d BOX (0.135"X 3.5",MIN)	7/8"	1 5/8"	2 1/8"	1 1/8"
20d BOX (0.148"X 4.",MIN)	1"	1 7/8"	2 1/4"	1 1/8"
8d COMMON (0.131"X 2.5",MIN)	7/8"	1 5/8"	2"	1"
10d COMMON (0.148"X 3.",MIN)	1"	1 7/8"	2 1/4"	1 1/8"
12d COMMON (0.148"X 3.25",MIN)	1"	1 7/8"	2 1/4"	1 1/8"
16d COMMON (0.162"X 3.5",MIN)	1'	2"	2 1/2"	1 1/4"
GUN (0.120"X 2.5",MIN)	3/4"	1 1/2"	1 7/8"	1"
GUN (0.131"X 2.5",MIN)	7/8"	1 5/8"	2"	1"
GUN (0.120"X 3.",MIN)	3/4"	1 1/2"	1 7/8"	1"
GUN (0.131"X 3.",MIN)	7/8"	1 5/8"	2"	1"

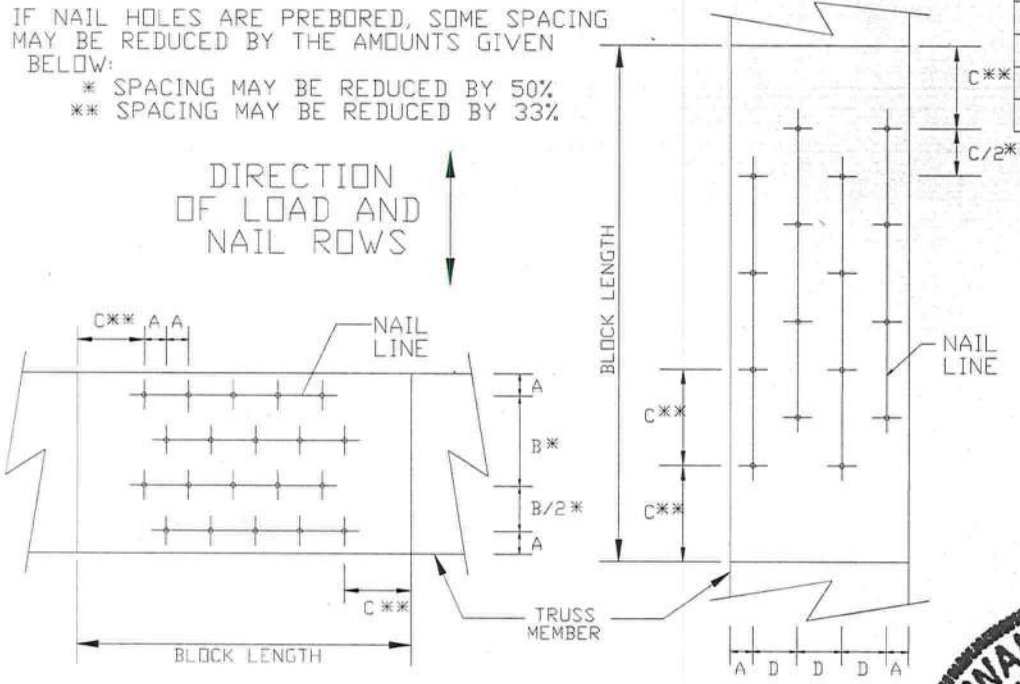

LOAD APPLIED PERPENDICULAR TO GRAIN LOAD APPLIED PARALLEL TO GRAIN

WALTER P. FINN
LICENSE
No. 22839
STATE OF FLORIDA
PROFESSIONAL ENGINEER

ITW Building Components Group Inc.

Earth City, MO 63045

WARNING READ AND FOLLOW ALL NOTES ON THIS SHEET!
Trusses require extreme care in fabricating, handling, shipping, installing and bracing. Refer to and follow BCSI (Building Component Safety Information, by TPI and WTCA) for safety practices prior to performing these functions. Installers shall provide temporary bracing per BCSI. Unless stated otherwise, top chord shall have properly attached structural panels and bottom chord shall have properly attached rigid ceiling. Locations shown for permanent lateral restraint of webs shall have bracing installed per BCSI sections B3 & B7. See this job's general notes page for more information.

IMPORTANT FURNISH COPY OF THIS DESIGN TO INSTALLATION CONTRACTOR.
ITW Building Components Group Inc (ITWBCG) shall not be responsible for any deviation from this design, any failure to build the truss in conformance with TPI, or fabricating, handling, shipping, installing & bracing of trusses. ITWBCG connector plates are made of 20/18/16GA (W,H/S/K) A653 grade 37/40/60 (K/W/H,S) galv. steel. Apply plates to each face of truss, positioned as shown on this and on Joint Details.
A seal on this drawing or cover page indicates acceptance and professional engineering responsibility solely for the truss component design shown. The suitability and use of this component for any building is the responsibility of the Building Designer per ANSI/TPI 1 Sec. 3.
ITW-BCG: www.itwbcg.com; TPI: www.tpinst.com; WTCA: www.sbcindustry.com; ICC: www.iccsafe.org

12
05/16/2012

REF	NAIL SPACE
DATE	1/1/09
DRWG	CNNAILSP0109