LOT 26 SOUTHERN LANDINGS AVIATIO
WD 1035-1024, QC 1157-1254, QC 1

MARSHALL TIMOTHY WAYNE/MARSHALL WIWIK
160 SW ORANGE BLOSSOM CT
LAKE CITY, FL 32025

2024

12-4S-16-02941-126

COLUMBIA COUNTY PROPERTY

BUILDING CHARACTERISTICS

ELEMENT	CD	CONSTRUCTION
Exterior Wall	16	WD FR STUC 100
Exterior Wall	00	N/A 0
Roof Structur	08	IRREGULAR 100
Roof Cover	03	COMP SHNGL 100
Interior Wall	05	DRYWALL 100
Interior Floo	13	LAM/VNLPLK 100
Interior Floo	00	N/A 0
Air Condition	03	CENTRAL 100
Heating Type	04	AIR DUCTED 100
Bedrooms		3 100
Bathrooms		2 100
Frame	02	WOOD FRAME 100
Stories	1.	1. 100
Units		0 100
Condition Adj	03	03 100
Kitchen Adjus	01	01 100
Quality	07	07
DOR CODE	0100	SINGLE FAMILY
MAP NUM		MKT AREA 06
NEIGHBORHOOD/LOC	12416.00	1.00/

AREA TYPE	TOTAL GROSS AREA	PCT OF BASE	TOT ADJ AREA	SUBAREA MARKET VALUE
BAS	1,840	100	1,840	209,785
FGR	484	55	266	30,328
FOP	160	30	48	5,473
FOP	174	30	52	5,929
HGR	2,000	45	900	102,612
TOTALS	4,658		3,106	354,127

MARKET ADJUSTMENTS

TYPE	MDL	EFF. AREA	TOT ADJ PTS	EFF. BASE RATE	REPL. COST NEW	AYB	EYB	ECON	FNCT		NORM	% COND
0100	01	3,106	120.5710	115.75	359,520	2022	2022	0	0	0	1.50	98.50

1 SINGLE FAM – 100% - 2023 Heated Area: 1840 HX Base Yr 2023

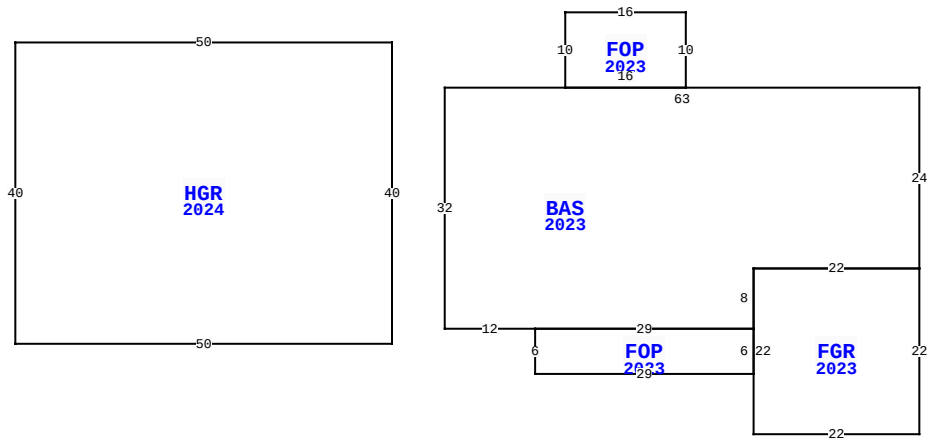

160 SW ORANGE BLOSSOM CT, LAKE CITY

BLD DATE		LGL DATE	
XF DATE		LAND DATE	04/20/2023 MLU
INC DATE		AG DATE	

VALUATION SUMMARY

VALUATION BY		STANDARD
Tax Group: 2	Tax Dist:	
BUILDING MARKET VALUE		354,127
TOTAL MARKET OB/XF VALUE		4,860
TOTAL LAND VALUE - MARKET		28,000
TOTAL MARKET VALUE		386,987
SOH/AGL Deduction		0
ASSESSED VALUE		386,987
TOTAL EXEMPTION VALUE	HX HB	50,000
BASE TAXABLE VALUE		336,987
TOTAL JUST VALUE		386,987
NCON VALUE		97,441
INCOME VALUE		
PREVIOUS YEAR MKT VALUE		293,455

PERMIT NUM	DESCRIPTION	AMT	ISSUED
000049244	Roof Replacement	20,250	02/20/2024
000046955	Storage Building	128,000	04/13/2023
000042929	New Residential C	250,000	10/08/2021

SALES DATA

OFF RECORD Number	DATE	TYPE INST	Q U	V I	RSN CD	SALE PRICE
1479/349	11/08/2022	WD	Q	V	01	449,000
GRANTOR: LEV JOANN T						
GRANTEE: MARSHALL TIMOTHY WA						
1446/1682	9/01/2021	WD	Q	V	01	30,000
GRANTOR: SCHULDT CHRISTOPHER J						
GRANTEE: LEV JOANN T						

BUILDING NOTES

BUILDING DIMENSIONS

BAS=[YR=2023;ORIG=10,-20] W63 S32 E12 E29 N8 E22 N24 $
FGR=[YR=2023;ORIG=-12,4] E22 S22 W22 N22 $
FOP=[YR=2023;ORIG=-41,12] E29 S6 W29 N6 $
FOP=[YR=2023;ORIG=-37,-30] E16 S10 W16 N10 $
HGR=[YR=2024;ORIG=-110,-26] E50 S40 W50 N40 $
.

EXTRA FEATURES

LN	OB/XF CODE	DESCRIPTION	BLD	CAP	L	W	UNITS	UT	Adj R	ADJ UNIT PRICE	ORIG COND	YEAR ON	YEAR ACTUAL	Q	% COND	OB/XF MKT VALUE	NOTES
1	0166	CONC,PAVMT	0	100	0	0	1,620.00	UT	3.00	3.00	100	2023	2022		100	4,860	

LAND DESCRIPTION

TOTAL OB/XF 4,860

LN	USE CODE	CLS	LAND USE DESCRIPTION	CAP	RD	LOC ZONE	FRONT	DEPTH	TOT LND UTS	UNIT TYPE	DT	DPTH FACT	% COND	TOT ADJ	UNIT PRICE	ADJ UNIT PRICE	LAND VALUE	OTHER ADJUSTMENTS AND NOTES	YEAR	DENSITY	DECL	FRZ	YR	CONSRV
1	0100	C	SFR	100		RSF/MH	0.00	0.00	1.00	LT		1.00	1.00	1.00	28,000.00	28,000.00	28,000							

REVIEW DATE 03/20/2024 BY JS Total Acres: 0.73 Total Land Value: 28,000 Market: 0 Agricultural: 0 Common: 28,000 PRINTED 03/27/2024 BY SYS