DATE 03/28/2007

Columbia County Building Permit

This Permit Expires One Year From the Date of Issue

PERMIT
000025673

APPLICANT LINDA RODER PHONE 623-2383

ADDRESS PO BOX 1921 LAKE CITY FL 32056

OWNER ADAM'S FRAMING & CONSTRUCTION PHONE 623-2383

ADDRESS 147 SW WIS DR LAKE CITY FL 32024

CONTRACTOR ADAM PAPKA PHONE 623-2383

LOCATION OF PROPERTY 47 S, R ON CR 242, R ON SW WISE DR, 9TH LOT ON THE LEFT

TYPE DEVELOPMENT SFD,UTILITY ESTIMATED COST OF CONSTRUCTION 76550.00

HEATED FLOOR AREA 1531.00 TOTAL AREA 2247.00 HEIGHT 19.70 STORIES 1

FOUNDATION CONCRETE WALLS FRAMED ROOF PITCH 7/12 FLOOR SLAB

LAND USE & ZONING RSF-2 MAX. HEIGHT 35

Minimum Set Back Requirments: STREET-FRONT 25.00 REAR 15.00 SIDE 10.00

NO. EX.D.U. 0 FLOOD ZONE XPP DEVELOPMENT PERMIT NO.

PARCEL ID 24-4S-16-03113-122 SUBDIVISION WISE ESTATES

LOT 2 BLOCK B PHASE UNIT TOTAL ACRES 0.58

000001357		CBC1253409		
Culvert Permit No.	Culvert Waiver	Contractor's License Number	Applicant/Owner/Contractor	
CULVERT	07-249	BK	JH	N
Driveway Connection	Septic Tank Number	LU & Zoning checked by	Approved for Issuance	New Resident

COMMENTS: PLAT REQUIRES FIRST FLOOR TO BE 99.0 FEET, ELEVATION LETTER REQUIRED, NOC

Check # or Cash 3434

FOR BUILDING & ZONING DEPARTMENT ONLY

Temporary Power _____ date/app. by
Foundation _____ date/app. by
Monolithic _____ date/app. by (footer/Slab)
Under slab rough-in plumbing _____ date/app. by
Slab _____ date/app. by
Sheathing/Nailing _____ date/app. by
Framing _____ date/app. by
Rough-in plumbing above slab and below wood floor _____ date/app. by
Electrical rough-in _____ date/app. by
Heat & Air Duct _____ date/app. by
Peri. beam (Lintel) _____ date/app. by
Permanent power _____ date/app. by
C.O. Final _____ date/app. by
Culvert _____ date/app. by
M/H tie downs, blocking, electricity and plumbing _____ date/app. by
Pool _____ date/app. by
Reconnection _____ date/app. by
Pump pole _____ date/app. by
Utility Pole _____ date/app. by
M/H Pole _____ date/app. by
Travel Trailer _____ date/app. by
Re-roof _____ date/app. by

BUILDING PERMIT FEE $ 385.00 CERTIFICATION FEE $ 11.23 SURCHARGE FEE $ 11.23

MISC. FEES $ 0.00 ZONING CERT. FEE $ 50.00 FIRE FEE $ 0.00 WASTE FEE $

FLOOD DEVELOPMENT FEE $ FLOOD ZONE FEE $ 25.00 CULVERT FEE $ 25.00 **TOTAL FEE** 507.46

INSPECTORS OFFICE L Hodson CLERKS OFFICE CH

NOTICE: IN ADDITION TO THE REQUIREMENTS OF THIS PERMIT, THERE MAY BE ADDITIONAL RESTRICTIONS APPLICABLE TO THIS PROPERTY THAT MAY BE FOUND IN THE PUBLIC RECORDS OF THIS COUNTY. AND THERE MAY BE ADDITIONAL PERMITS REQUIRED FROM OTHER GOVERNMENTAL ENTITIES SUCH AS WATER MANAGEMENT DISTRICTS, STATE AGENCIES, OR FEDERAL AGENCIES.

"WARNING TO OWNER: YOUR FAILURE TO RECORD A NOTICE OF COMMENCEMENT MAY RESULT IN YOUR PAYING TWICE FOR IMPROVEMENTS TO YOUR PROPERTY. IF YOU INTEND TO OBTAIN FINANCING, CONSULT WITH YOUR LENDER OR AN ATTORNEY BEFORE RECORDING YOUR NOTICE OF COMMENCEMENT."

This Permit Must Be Prominently Posted on Premises During Construction

PLEASE NOTIFY THE COLUMBIA COUNTY BUILDING DEPARTMENT AT LEAST 24 HOURS IN ADVANCE OF EACH INSPECTION, IN ORDER THAT IT MAY BE MADE WITHOUT DELAY OR INCONVIENCE, PHONE 758-1008. THIS PERMIT IS NOT VALID UNLESS THE WORK AUTHORIZED BY IT IS COMMENCED WITHIN 6 MONTHS AFTER ISSUANCE.

The Issuance of this Permit Does Not Waive Compliance by Permittee with Deed Restrictions.

Lot 2 Block B

ck 3434

Columbia County Building Permit Application

1357/5673

For Office Use Only Application # 0703-53 Date Received 3/20/07 By G Permit # ____

Application Approved by - Zoning Official BLK Date 28.03.07 Plans Examiner OKSTH Date 3-22-07

Flood Zone - X Plat Development Permit N/A Zoning RSF-2 Land Use Plan Map Category RES. Low Dev.

Comments Plat Required / 1st Floor to be at 99.0ft Elevation letter Required

☐ NOC ☐ EH ☐ Deed or PA ☐ Site Plan ☐ State Road Info ☐ Parent Parcel # ☐ Development Permit

Name Authorized Person Signing Permit Linda Roder for Adam Papka Phone 623-2383 Fax 752-4202 752-2281

Address P.O. Bo 1921 Lake City FL 32056

Owner's Name Adam's Framing + Construction Phone 623-2383

911 Address 147 SW Wise Dr Lake City FL 32024

Contractors Name Adam Papka Phone ____

Address P.O.B 1921 Lake City FL 32056

Fee Simple Owner Name & Address NA

Bonding Co. Name & Address N.A

Architect/Engineer Name & Address Will Myers / Nick Geisler

Mortgage Lenders Name & Address Columbia Bank

Circle the correct power company - FL Power & Light - Clay Elec. - Suwannee Valley Elec. - Progress Energy

Property ID Number 24-4S-16-03113-122 Estimated Cost of Construction 125,000

Subdivision Name Wise Estates Lot 2 Block B Unit ____ Phase ____

Driving Directions 475 N on CR 242, R on SW Wise Dr. 9th Lot down on L.

Type of Construction SFD Number of Existing Dwellings on Property 0

Total Acreage .580 Lot Size ____ Do you need a - Culvert Permit or Culvert Waiver or Have an Existing Drive

Actual Distance of Structure from Property Lines - Front 50' Side 73'-11" Side 50' Rear 31'-10"

Total Building Height 19'-7" Number of Stories 1 Heated Floor Area 1531 TOTAL 2247 Roof Pitch 7-12

Application is hereby made to obtain a permit to do work and installations as indicated. I certify that no work or installation has commenced prior to the issuance of a permit and that all work be performed to meet the standards of all laws regulating construction in this jurisdiction.

OWNER'S AFFIDAVIT: I hereby certify that all the foregoing information is accurate and all work will be done in compliance with all applicable laws and regulating construction and zoning.

WARNING TO OWNER: YOUR FAILURE TO RECORD A NOTICE OF COMMENCEMENT MAY RESULT IN YOU PAYING TWICE FOR IMPROVEMENTS TO YOUR PROPERTY. IF YOU INTEND TO OBTAIN FINANCING, CONSULT WITH YOUR LENDER OR ATTORNEY BEFORE RECORDING YOUR NOTICE OF COMMENCEMENT.

Owner Builder or Authorized Person by Notarized Letter

Contractor Signature

Contractors License Number CBC1253409

Competency Card Number ____

NOTARY STAMP/SEAL

Linda R. Röder
Commission #DD303276
Expires: Mar 24, 2008
Bonded Thru
Atlantic Bonding Co., Inc.

STATE OF FLORIDA
COUNTY OF COLUMBIA

Sworn to (or affirmed) and subscribed before me this ____ day of ____ 20____.

Personally known ____ or Produced Identification ____

Notary Signature

(Revised Sept. 2006)

Columbia County Building Department
Culvert Permit

Culvert Permit No.
000001357

DATE 03/28/2007 PARCEL ID # 24-4S-16-03113-122

APPLICANT LINDA RODER PHONE 623-2383

ADDRESS PO BOX 1921 LAKE CITY FL 32056

OWNER ADAM'S FRAMING & CONSTRUCTION PHONE 623-2383

ADDRESS 147 SW WIS DR LAKE CITY FL 32024

CONTRACTOR ADAM PAPKA PHONE 623-2383

LOCATION OF PROPERTY 47 S, R ON CR 242, R ON SW WISE DR, 9TH LOT ON THE LEFT

SUBDIVISION/LOT/BLOCK/PHASE/UNIT WISE ESTATES 2 B

SIGNATURE

INSTALLATION REQUIREMENTS

[X] Culvert size will be 18 inches in diameter with a total lenght of 32 feet, leaving 24 feet of driving surface. Both ends will be mitered 4 foot with a 4 : 1 slope and poured with a 4 inch thick reinforced concrete slab.

INSTALLATION NOTE: Turnouts will be required as follows:
a) a majority of the current and existing driveway turnouts are paved, or;
b) the driveway to be served will be paved or formed with concrete.
Turnouts shall be concrete or paved a minimum of 12 feet wide or the width of the concrete or paved driveway, whichever is greater. The width shall conform to the current and existing paved or concreted turnouts.

[ ] Culvert installation shall conform to the approved site plan standards.

[ ] Department of Transportation Permit installation approved standards.

[ ] Other

ALL PROPER SAFETY REQUIREMENTS SHOULD BE FOLLOWED DURING THE INSTALATION OF THE CULVERT.

135 NE Hernando Ave., Suite B-21
Lake City, FL 32055
Phone: 386-758-1008 Fax: 386-758-2160

Amount Paid 25.00

FOR M 600A-2)04 Tested sealed ducts must be certified in this house. EnergyGauge® 4.1

FLORIDA ENERGY EFFICIENCY CODE FOR BUILDING CONSTRUCTION

Florida Department of Community Affairs

Residential Whole Building Performance Method A

Pro ct Name:	Adam's Framing & Construction - Derrosett	Builder:	Adam's Framing & Const.
Add ess:	Lot: 2B, Sub: Wise Estates, Plat:	Permitting Office:	Columbia County
City State:	Lake City, FL 32025-	Permit Number:	25673
Ow er:	Derrosett Residence	Jurisdiction Number:	221000
Clin ate Zone:	North		

1. lew constructi n or existing	New	
2. ingle family o multi-family	Single family	
3. lumber of unit , if multi-family	1	
4. lumber of Bed ooms	3	
5. s this a worst (ase?	No	
6. Conditioned fl or area (ft²)	1531 ft²	
7. Glass type[1] an area: (Label reqd. by 13-104.4.5 if not default)		
a. U-factor: (or Single or D ouble DEFAULT)	Description Area 7a(Sngle Default) 191.0 ft²	
b. SHGC: (or Clear or T nt DEFAULT)	7b. (Clear) 191.0 ft²	
8. Floor types		
a. Slab-On-Grade Edge Insulation	R=0.0, 210.0(p) ft	
b. N/A		
c. N/A		
9. Wall types		
a. Frame, Wood, Exterior	R=13.0, 1189.0 ft²	
b. Frame, Wood, Adjacent	R=13.0, 222.0 ft²	
c. N/A		
d N/A		
e. N/A		
10. Ceiling types		
a Under Attic	R=30.0, 1600.0 ft²	
b N/A		
c N/A		
11. Ducts(Leak Fr e)		
a Sup: Unc. Ret Unc. AH: Garage	Sup. R=6.0, 50.0 ft	
b N/A		

12. Cooling systems		
a. Central Unit	Cap: 37.0 kBtu/hr	
	SEER: 11.00	
b. N/A		
c. N/A		
13. Heating systems		
a. Electric Heat Pump	Cap: 37.0 kBtu/hr	
	HSPF: 6.80	
b. N/A		
c. N/A		
14. Hot water systems		
a. Electric Resistance	Cap: 50.0 gallons	
	EF: 0.90	
b. N/A		
c. Conservation credits (HR-Heat recovery, Solar DHP-Dedicated heat pump)		
15. HVAC credits (CF-Ceiling fan, CV-Cross ventilation, HF-Whole house fan, PT-Programmable Thermostat, MZ-C-Multizone cooling, MZ-H-Multizone heating)	PT,	

Glass/Floor Area: 0.12 Total as-built points: 22685 Total base points: 23955 **PASS**

I he eby certify th at the plans and specifications covered by this calculation a e in compliance with the Florida Energy Co e.

PR EPARED BY: _____

DA TE: 3-14-07

I he eby certify th at this building, as designed, is in compliance with the Florida E nergy Code.

OW NER/AGE NT: _____

DA TE: 3-20-07

Review of the plans and specifications covered by this calculation indicates compliance with the Florida Energy Code. Before construction is completed this building will be inspected for compliance with Section 553.908 Florida Statutes.

GREAT SEAL OF THE STATE OF FLORIDA — IN GOD WE TRUST

BUILDING OFFICIAL: _____

DATE: _____

1 P dominant glas s type. For actual glass type and areas, see Summer & Winter Glass output on pages 2&4.

SUMMER CALCULATIONS

Resi dential Whole Building Performance Method A - Details

A DRESS: L ot: 2B, Sub: Wise Estates, Plat: , Lake City, FL, 32025- PERMIT #:

BASE				AS-BUILT							
GLA S TYPES .18 Conditio ed Floor Ar a	X BSPM	= Points		Type/SC	Overhang Ornt	Len	Hgt	Area X	SPM X	SOF	= Points
.18	1531.)	20.04	5522.6	Single, Clear	W	1.5	8.0	6.0	43.84	0.96	252.0
				Single, Clear	N	1.5	8.0	16.0	21.73	0.97	336.3
				Single, Clear	W	1.5	8.0	9.0	43.84	0.96	378.0
				Single, Clear	W	11.5	8.0	40.0	43.84	0.46	799.6
				Single, Clear	W	1.5	8.0	30.0	43.84	0.96	1260.0
				Single, Clear	E	1.5	8.0	60.0	47.92	0.96	2753.1
				Single, Clear	S	1.5	8.0	30.0	40.81	0.92	1130.4
				As-Built Total:				191.0			6909.4

WA L TYPES	Area X	BSPM	= Points	Type	R-Value	Area X	SPM	= Points
Adja ent	222.0	0.70	155.4	Frame, Wood, Exterior	13.0	1189.0	1.50	1783.5
Exte or	1189.0	1.70	2021.3	Frame, Wood, Adjacent	13.0	222.0	0.60	133.2
Bas Total:	1411.0		2176.7	As-Built Total:		1411.0		1916.7

DO R TYPES	Area X	BSPM	= Points	Type	Area X	SPM	= Points
Adja ent	18.0	1.60	28.8	Exterior Insulated	20.0	4.10	82.0
Exte or	20.0	4.10	82.0	Adjacent Insulated	18.0	1.60	28.8
Bas Total:	38.0		110.8	As-Built Total:	38.0		110.8

CE ING TYPE S	Area X	BSPM	= Points	Type	R-Value	Area X	SPM X SCM	= Points
Und Attic	1531.0	1.73	2648.6	Under Attic	30.0	1600.0	1.73 X 1.00	2768.0
Bas Total:	1531.0		2648.6	As-Built Total:		1600.0		2768.0

FL OR TYPES	Area X	BSPM	= Points	Type	R-Value	Area X	SPM	= Points
Sla	210.0(p)	-37.0	-7770.0	Slab-On-Grade Edge Insulation	0.0	210.0(p	-41.20	-8652.0
Rai d	0.0	0.00	0.0					
Bas Total:			-7770.0	As-Built Total:		210.0		-8652.0

INI LTRATION	Area X	BSPM	= Points	Area X	SPM	= Points
	1531.0	10.21	15631.5	1531.0	10.21	15631.5

SUMMER CALCULATIONS

Resi dential Whole Building Performance Method A - Details

A DRESS: L t: 2B, Sub: Wise Estates, Plat: , Lake City, FL, 32025- PERMIT #:

BASE				AS-BUILT						
Sur mer Bas e Points: 18320.3				Summer As-Built Points:						18684.4
Total Summer Points	X	System Multiplier	=	Cooling Points	Total Component (System - Points)	X	Cap Ratio	X	Duct Multiplier (DM x DSM x AHU)	X	System Multiplier	X	Credit Multiplier	=	Cooling Points
					(sys 1: Central Unit 37000 btuh ,SEER/EFF(11.0) Ducts:Unc(S),Unc(R),Gar(AH),R6.0(INS)										
					18684		1.00		(1.09 x 1.000 x 1.00)		0.310		0.950		6003.1
1 320.3		0.4266		7815.4	18684.4		1.00		1.090		0.310		0.950		6003.1

WINTER CALCULATIONS

Resi(lential Whole Building Performance Method A - Details

A DRESS: L ot: 2B, Sub: Wise Estates, Plat: , Lake City, FL, 32025- PERMIT #:

BASE

GLA S TYPES .18	Conditior ed Floor Ar a	X BWPM	= Points
.18	1531.	12.74	3510.9

WA L TYPES	Area X BWPM		= Points
Adja nt	222.0	3.60	799.2
Exte r	1189.0	3.70	4399.3
Bas Total:	1411.0		5198.5

DO R TYPES	Area X BWPM		= Points
Adja nt	18.0	8.00	144.0
Exte or	20.0	8.40	168.0
Bas Total:	38.0		312.0

CE ING TYPE S	Area X BWPM		= Points
Und Attic	1531.0	2.05	3138.6
Bas Total:	1531.0		3138.6

FL OR TYPES	Area X BWPM		= Points
Slat	210.0(p)	8.9	1869.0
Rais d	0.0	0.00	0.0
Bas Total:			1869.0

INF LTRATION	Area X BWPM		= Points
	1531.0	-0.59	-903.3

AS-BUILT

Type/SC	Overhang Ornt	Len	Hgt	Area X	WPM X	WOF =	Points
Single, Clear	W	1.5	8.0	6.0	28.84	1.01	175.0
Single, Clear	N	1.5	8.0	16.0	33.22	1.00	532.0
Single, Clear	W	1.5	8.0	9.0	28.84	1.01	262.4
Single, Clear	W	11.5	8.0	40.0	28.84	1.20	1385.3
Single, Clear	W	1.5	8.0	30.0	28.84	1.01	874.8
Single, Clear	E	1.5	8.0	60.0	26.41	1.02	1616.0
Single, Clear	S	1.5	8.0	30.0	20.24	1.04	632.1
As-Built Total:				191.0			5477.6

Type	R-Value	Area X	WPM =	Points
Frame, Wood, Exterior	13.0	1189.0	3.40	4042.6
Frame, Wood, Adjacent	13.0	222.0	3.30	732.6
As-Built Total:		1411.0		4775.2

Type	Area X	WPM =	Points
Exterior Insulated	20.0	8.40	168.0
Adjacent Insulated	18.0	8.00	144.0
As-Built Total:	38.0		312.0

Type	R-Value	Area X	WPM X WCM =	Points
Under Attic	30.0	1600.0	2.05 X 1.00	3280.0
As-Built Total:		1600.0		3280.0

Type	R-Value	Area X	WPM =	Points
Slab-On-Grade Edge Insulation	0.0	210.0(p	18.80	3948.0
As-Built Total:		210.0		3948.0

Area X	WPM =	Points
1531.0	-0.59	-903.3

WINTER CALCULATIONS

Resi(lential Whole Building Performance Method A - Details

A DRESS: L ɔt: 2B, Sub: Wise Estates, Plat: , Lake City, FL, 32025- PERMIT #:

BASE				AS-BUILT						
Wir er Base Points:			13125.6	Winter As-Built Points:						16889.5
Total Winter F ints	X	System Multiplier	= Heating Points	Total Component (System - Points)	X Cap Ratio	X Duct Multiplier (DM x DSM x AHU)	X System Multiplier	X Credit Multiplier	= Heating Points	
				(sys 1: Electric Heat Pump 37000 btuh ,EFF(6.8) Ducts:Unc(S),Unc(R),Gar(AH),R6.0						
				16889.5	1.000	(1.069 x 1.000 x 1.00)	0.501	0.950	8601.3	
1 125.6		0.6274	8235.0	16889.5	1.00	1.069	0.501	0.950	8601.3	

WATIER HEATING & CODE COMPLIANCE STATUS

Resi(dential Whole Building Performance Method A - Details

A)DRESS: L ɔt: 2B, Sub: Wise Estates, Plat: , Lake City, FL, 32025- PERMIT #:

BASE				AS-BUILT							
WAT ER HEATI G											
Nur ber of Be rooms	X	Multiplier	= Total	Tank Volume	EF	Number of Bedrooms	X	Tank Ratio	X Multiplier	X Credit Multiplier	= Total
3		2635.00	7905.0	50.0	0.90	3		1.00	2693.56	1.00	8080.7
				As-Built Total:							8080.7

CODE COMPLIANCE STATUS

BASE					AS-BUILT				
Co ling P nts	+ Heating Points	+ Hot Water Points	= Total Points		Cooling Points	+ Heating Points	+ Hot Water Points	= Total Points	
7 15	8235	7905	23955		6003	8601	8081	22685	

PASS

Code Compliance Checklist

Resi(lential Whole Building Performance Method A - Details

A)DRESS: L ɔt: 2B, Sub: Wise Estates, Plat: , Lake City, FL, 32025- PERMIT #:

6A- 1 INFILTR ATION REDUCTION COMPLIANCE CHECKLIST

COI 'ONENTS	SECTION	REQUIREMENTS FOR EACH PRACTICE	CHECK
Exte ɔr Windows & Doors	606.1.ABC.1.1	Maximum:.3 cfm/sq.ft. window area; .5 cfm/sq.ft. door area.	
Exte ɔr & Adjacent Walls	606.1.ABC.1.2.1	Caulk, gasket, weatherstrip or seal between: windows/doors & frames, surrounding wall; foundation & wall sole or sill plate; joints between exterior wall panels at corners; utility penetrations; between wall panels & top/bottom plates; between walls and floor. EXCEPTION: Frame walls where a continuous infiltration barrier is installed that extends from, and is sealed to, the foundation to the top plate.	
Floc	606.1.ABC.1.2.2	Penetrations/openings >1/8" sealed unless backed by truss or joint members. EXCEPTION: Frame floors where a continuous infiltration barrier is installed that is sealed to the perimeter, penetrations and seams.	
Ceil gs	606.1.ABC.1.2.3	Between walls & ceilings; penetrations of ceiling plane of top floor; around shafts, chases, soffits, chimneys, cabinets sealed to continuous air barrier; gaps in gyp board & top plate; attic access. EXCEPTION: Frame ceilings where a continuous infiltration barrier is installed that is sealed at the perimeter, at penetrations and seams.	
Rec ɜsed Lighting Fixtures	606.1.ABC.1.2.4	Type IC rated with no penetrations, sealed; or Type IC or non-IC rated, installed inside a sealed box with 1/2" clearance & 3" from insulation; or Type IC rated with < 2.0 cfm from conditioned space, tested.	
Mul story Houses	606.1.ABC.1.2.5	Air barrier on perimeter of floor cavity between floors.	
Add onal Infiltratio ı reqts	606.1.ABC.1.3	Exhaust fans vented to outdoors, dampers; combustion space heaters comply with NFPA, have combustion air.	

6A 2 OTHER PRESCRIPTIVE MEASURES (must be met or exceeded by all residences.)

CO PONENTS	SECTION	REQUIREMENTS	CHECK
Wa r Heaters	612.1	Comply with efficiency requirements in Table 612.1.ABC.3.2. Switch or clearly marked cir breaker (electric) or cutoff (gas) must be provided. External or built-in heat trap required.	
Swi ming Pools & Spas	612.1	Spas & heated pools must have covers (except solar heated). Non-commercial pools must have a pump timer. Gas spa & pool heaters must have a minimum thermal efficiency of 78%.	
Sh(ver heads	612.1	Water flow must be restricted to no more than 2.5 gallons per minute at 80 PSIG.	
Air istribution Sys tems	610.1	All ducts, fittings, mechanical equipment and plenum chambers shall be mechanically attached, sealed, insulated, and installed in accordance with the criteria of Section 610. Ducts in unconditioned attics: R-6 min. insulation.	
HV C Controls	607.1	Separate readily accessible manual or automatic thermostat for each system	
Ins ation	604.1, 602.1	Ceilings-Min. R-19. Common walls-Frame R-11 or CBS R-3 both sides. Common ceiling & floors R-11.	

Tested sealed ducts must be certified in this house.

ENERGY PERFORMANCE LEVEL (EPL) DISPLAY CARD

ESTIMATED ENERGY PERFORMANCE SCORE* = 84.3

The higher the score, the more efficient the home.

Derrosett Residence, Lot: 2B, Sub: Wise Estates, Plat: , Lake City, FL, 32025-

1.	ew constructio or existing	New
2.	gle family or multi-family	Single family
3.	mber of units if multi-family	1
4.	mber of Bedr oms	3
5.	this a worst case?	No
6.	nditioned floor area (ft²)	1531 ft²
7.	ass type[1] and area: (Label reqd. by 13-104.4.5 if not default)	
a.	factor:	Description Area
	r Single or Double DEFAULT)	7a(Sngle Default) 191.0 ft²
b.	IGC:	
	or Clear or Tint DEFAULT)	7b. (Clear) 191.0 ft²
8.	oor types	
a.	ab-On-Grade dge Insulation	R=0.0, 210.0(p) ft
b.	/A	
c.	/A	
9.	all types	
a.	ame, Wood, Exterior	R=13.0, 1189.0 ft²
b.	ame, Wood, Adjacent	R=13.0, 222.0 ft²
c.	/A	
d.	/A	
e.	/A	
10.	eiling types	
a.	nder Attic	R=30.0, 1600.0 ft²
b.	/A	
c.	/A	
11.	ucts(Leak Free)	
a.	up: Unc. Ret: Unc. AH: Garage	Sup. R=6.0, 50.0 ft
b.	/A	

12.	Cooling systems	
a.	Central Unit	Cap: 37.0 kBtu/hr
		SEER: 11.00
b.	N/A	
c.	N/A	
13.	Heating systems	
a.	Electric Heat Pump	Cap: 37.0 kBtu/hr
		HSPF: 6.80
b.	N/A	
c.	N/A	
14.	Hot water systems	
a.	Electric Resistance	Cap: 50.0 gallons
		EF: 0.90
b.	N/A	
c.	Conservation credits (HR-Heat recovery, Solar DHP-Dedicated heat pump)	
15.	HVAC credits (CF-Ceiling fan, CV-Cross ventilation, HF-Whole house fan, PT-Programmable Thermostat, MZ-C-Multizone cooling, MZ-H-Multizone heating)	PT,

I certify that this home has complied with the Florida Energy Efficiency Code For Building Construction through the above energy saving features which will be installed (or exceeded) in the home before final inspection. Otherwise, a new EPL Display Card will be completed based on installed Code compliant features.

Builder Signature _____ Date: _____

Address of New Home: _____ City/FL Zip: _____

NOTE: The home's estimated energy performance score is only available through the FLA/RES computer program. This is not a Building Energy Rating. If your score is 80 or greater (or 86 for a US EPA/DOE EnergyStar™ designation), your home may qualify for energy efficiency mortgage (EEM) incentives if you obtain a Florida Energy Gauge Rating. Contact the Energy Gauge Hotline at 321/638-1492 or see the Energy Gauge web site at www.fsec.ucf.edu for information and a list of certified Raters. For information about Florida's Energy Efficiency Code For Building Construction, contact the Department of Community Affairs at 850/487-1824.

1 Predominant glass type. For actual glass type and areas, see Summer & Winter Glass output on pages 2&4.

Energy Code Compliance

Duct System Performance Report

Project Name:	Adam's Framing & Construction - Derrosett	Builder:	Adam's Framing & Const.
Address:		Permitting Office:	
City, State:	Lake City, FL 32025-	Permit Number:	
Owner:	Derrosett Residence	Jurisdiction Number:	
Climate Zone:	North		

Total Duct System Leakage Test Results

CFM25 Total Duct Leakage Test Values			
Line	System	Duct Leakage Total	Duct Leakage to Outdoors
1	System1	_____ cfm25(tot)	_____ cfm25(out)
2	System2	_____ cfm25(tot)	_____ cfm25(out)
3	System3	_____ cfm25(tot)	_____ cfm25(out)
4	System4	_____ cfm25(tot)	_____ cfm25(out)
5	**Total House Duct System Leakage**	Sum lines 1-4 _____ Divide by _____ (Total Conditioned Floor Area) = _____ (Q_n,tot) ☐ Receive credit if Q_n,tot ≤ 0.03	Sum lines 1-4 _____ Divide by _____ (Total Conditioned Floor Area) = _____ (Q_n,out) ☐ Receive credit if Q_n,out ≤ 0.03 AND Q_n,tot ≤ 0.09

I hereby certify that the above duct testing performance results demonstrate compliance with the Florida Energy Code requirements in accordance with Section 610.1.A.1, Florida Building Code, Building Volume, Chapter 13 for leak free duct system credit.

Signature: _____

Printed Name: _____

Florida Rater Certification #: _____

DATE: _____

Florida Building Code requires that testing to confirm leak free duct systems be performed by a Class 1 Florida Energy Gauge Certified Energy Rater. Certified Florida Class 1 raters can be found at: http://energygauge.com/search.htp

BUILDING OFFICIAL: _____

DATE: _____

0703-53

Application for Onsite Sewage Disposal System Construction Permit. Part II Site Plan

Permit Application Number: 12S&113299 07-249

ALL CHANGES MUST BE APPROVED BY THE COUNTY HEALTH UNIT

ADAM'S FRAMING/CR 06-3928

Lot 2
Wise
Estates

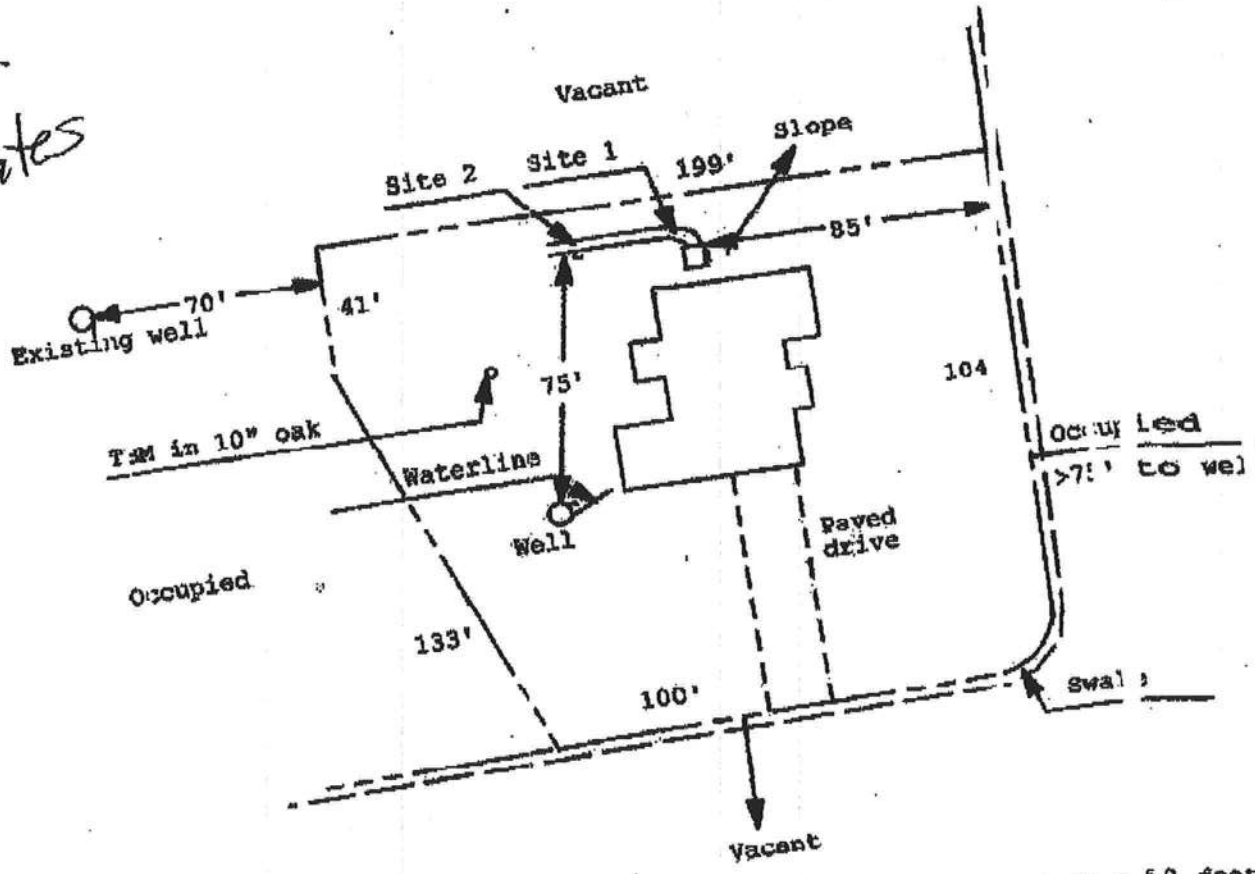

1 inch = 50 feet

Site Plan Submitted By Paul Date 3/21/07

Plan Approved ✓ Not Approved ___ Date 3/26/07 Columbia PHU

By John S. [illegible]

Notes:

0703
53

Permit Number:

Tax Folio Number:

State of: Florida
County of: Columbia

File Number: 07-0106

CLERK CIRCUIT COURT COLUMBIA COUNTY, FLORIDA

STATE OF FLORIDA, COUNTY OF COLUMBIA
I HEREBY CERTIFY, that the above and foregoing is a true copy of the original filed in this office.
P. DEWITT CASON, CLERK OF COURTS
By: B. Allen
Deputy Clerk
Date: 3-20-07

Inst:2007006356 Date:03/20/2007 Time:13:06
DC,P.DeWitt Cason,Columbia County B:1114 P:155

NOTICE OF COMMENCEMENT

The undersigned hereby gives notice that improvement will be made to certain real property, and, in accordance with Chapter 713, Florida Statutes, the following information is provided in this Notice of Commencement.

1. Description of Property:
   Lot 2, Block B, of Wise Estates, a subdivision according to the plat thereof as recorded in Plat Book 7, Page 164-167, of the Public Records of Columbia County, Florida.

2. General Description of Improvements: Construction of Single Family Residence

3. Owner Information:
   a. Name and Address: Adam's Framing and Construction LLC, P.O. Box 1921, Lake City, Florida 32056

   b. Interest in property: Fee Simple

   c. Names and address of fee simple title holder (if other than owner):

4. Contractor: Adam's Framing & Construction LLC, PO Box 1921, Lake City, FL 32056

5. Surety:

6. Lender: First Federal Savings Bank of Florida, 2571 West US Highway 90, Lake City, Florida 32025

7. Persons within the State of Florida designated by Owner upon whom notices or other documents may be served as provided by Section 713.13(1) (a)7., Florida Statutes.

8. In addition to himself, Owner designates the following persons to receive a copy of the Lienor's Notice as provided in Section 713.13(1)(b), Florida Statutes.

9. Expiration date of Notice of Commencement (the expiration date is 1 year from date of recording unless a different date is specified):

Adam's Framing and Construction LLC, a
Florida Limited Liability Company

By: _____
Adam Papka, Managing Member

Sworn to and subscribed before me March 19, 2007 by Adam Papka, Managing Member of Adam's Framing and Construction LLC, a Florida Limited Liability Company who is personally known to me or who did provide A Drivers License as identification.

_____
Notary Public
My Commission Expires: _____

Notary Public State of Florida
Melissa Rocco
My Commission DD876349
Expires 08/17/2010

Letter of authorization

Notice of Authorization

I Adam Papka, do hereby authorize Linda or Melanie Roder

to be my representative and act on my behaf in all aspects of applying for a septic & building permit to be located in Columbia county.

The name of the home owner is 24-45-16-03113-122.

Legal description Lot 2 Block B.

Contractor's signature

3-19-07

Date

Sworn and subscribed before me this 19 day of March, 2007.

Notary Public

My commission expires:

Commission No.

Personally Known ✓

Produced ID (Type):

Linda R. Roder
Commission #DD303275
Expires: Mar 24, 2008
Bonded Thru
Atlantic Bonding Co., Inc.

Corporate Warranty Deed

Inst:2007006394 Date:03/20/2007 Time:13:08
Doc Stamp-Deed : 300.30
DC,P.DeWitt Cason,Columbia County B:1114 P:247

This Indenture, made this 19th day of March, 2007 A.D.
Between
MARTIN HOME BUILDERS, INC., whose post office address is: PO Box 1831, Lake City, FL 32056, a Florida Corporation existing under the laws of the State of Florida, Grantor and **Adam's Framing and Construction LLC, a Florida Limited Liability Company** whose post office address is: PO Box 1921, Lake City, FL 32056, Grantee,

STATE OF FLORIDA, COUNTY OF COLUMBIA
I HEREBY CERTIFY, that the above and foregoing is a true copy of the original filed in this office.
P. DeWITT CASON, CLERK OF COURTS
By _____ Deputy Clerk
Date 3-30-07

(Whenever used herein the term "grantor" and "grantee" include all the parties to this instrument and the heirs, legal representatives and assigns of individuals, and the successors and assigns of corporations)

Witnesseth, that the grantor, for and in consideration of the sum of TEN AND NO/100 DOLLARS ($10.00) and other valuable considerations, receipt whereof is hereby acknowledged, hereby grants, bargains, sells, aliens, remises, releases, conveys and confirms unto the grantee, all that certain land situate in Columbia County, Florida, viz:

Lot 2, Block B of WISE ESTATES, a subdivision according to the plat thereof as recorded in Plat Book 7, Pages 164 through 167, of the Public Records of Columbia County, Florida.

The above described property does not constitute the homestead property of the grantor described herein.

Subject to taxes for the current year, covenants, restrictions and easements of record, if any.

And the grantor hereby covenants with said grantee that the grantor is lawfully seized of said land in fee simple; that the grantor has good right and lawful authority to sell and convey said land; that the grantor hereby fully warrants the title to said land and will defend the same against the lawful claims of all persons whomsoever; and that said land is free of all encumbrances, except taxes accruing subsequent to December 31, 2006.

And the said Grantor does hereby fully warrant the title to said land, and will defend the same against the lawful claims of all persons whomsoever.

In Witness Whereof, the said Grantor has caused this instrument to be executed in its name by its duly authorized officer and caused its corporate seal to be affixed the day and year first above written.

MARTIN HOME BUILDERS, INC., a Florida corporation

Signed and Sealed in Our Presence:

By: _____
Bennett G. Martin
Its: President

Witness Print Name: Matthew D. Rocco

Witness Print Name: Robert S Stewart

State of Florida
County of Columbia

The foregoing instrument was acknowledged before me this 19th day of March, 2007, by **Bennett G. Martin, President of MARTIN HOME BUILDERS, INC.,** a Corporation existing under the laws of the State of Florida, on behalf of the corporation.
He is personally known to me or has produced A Drivers License as identification.

_____ (Seal)
Notary Public
Notary Printed Name: _____

My Commission Expires::

#07-0100
Prepared by & Return to:
Matthew D. Rocco
Sierra Title, LLC,
619 SW Baya Drive, Suite 102
Lake City, Florida 32025

Notary Public State of Florida
Matthew Rocco
My Commission DD578349
Expires 09/17/2010

Closer's Choice Florida Corporate Deed/Letter

Permit Number:

Tax Folio Number:

State of: **Florida**
County of: **Columbia**

File Number: **07-0100**

CLERK CIRCUIT COURT COLUMBIA COUNTY, FLORIDA

STATE OF FLORIDA, COUNTY OF COLUMBIA
I HEREBY CERTIFY, that the above and foregoing is a true copy of the original filed in this office.
P. DeWITT CASON, CLERK OF COURTS
By B Dow Deputy Clerk
Date 3-20-07

Inst:2007006396 Date:03/20/2007 Time:13:08
DC,P.DeWitt Cason,Columbia County B:1114 P:55

NOTICE OF COMMENCEMENT

The undersigned hereby gives notice that improvement will be made to certain real property, and, in accordance with Chapter 713, Florida Statutes, the following information is provided in this Notice of Commencement.

1. Description of Property:
   Lot 2, Block B, of Wise Estates, a subdivision according to the plat thereof as recorded in Plat Book 7, Page 164-167, of the Public Records of Columbia County, Florida.

2. General Description of Improvements: Construction of Single Family Residence

3. Owner Information:
   a. Name and Address: Adam's Framing and Construction LLC, P.O. Box 1921, Lake City, Florida 32056

   b. Interest in property: Fee Simple

   c. Names and address of fee simple title holder (if other than owner):

4. Contractor: Adam's Framing & Construction LLC, PO Box 1921, Lake City, FL 32056

5. Surety:

6. Lender: First Federal Savings Bank of Florida, 2571 West US Highway 90, Lake City, Florida 32025

7. Persons within the State of Florida designated by Owner upon whom notices or other documents may be served as provided by Section 713.13(1) (a)7., Florida Statutes.

8. In addition to himself, Owner designates the following persons to receive a copy of the Lienor's Notice as provided in Section 713.13(1)(b), Florida Statutes.

9. Expiration date of Notice of Commencement (the expiration date is 1 year from date of recording unless a different date is specified): .

Adam's Framing and Construction LLC, a
Florida Limited Liability Company

By: _____
Adam Papka, Managing Member

Sworn to and subscribed before me March 19, 2007 by Adam Papka, Managing Member of Adam's Framing and Construction LLC, a Florida Limited Liability Company who is personally known to me or who did provide A Drivers License as identification.

_____
Notary Public
My Commission Expires: _____

Notary Public State of Florida
Matthew Rocco
My Commission DD578349
Expires 09/17/2010

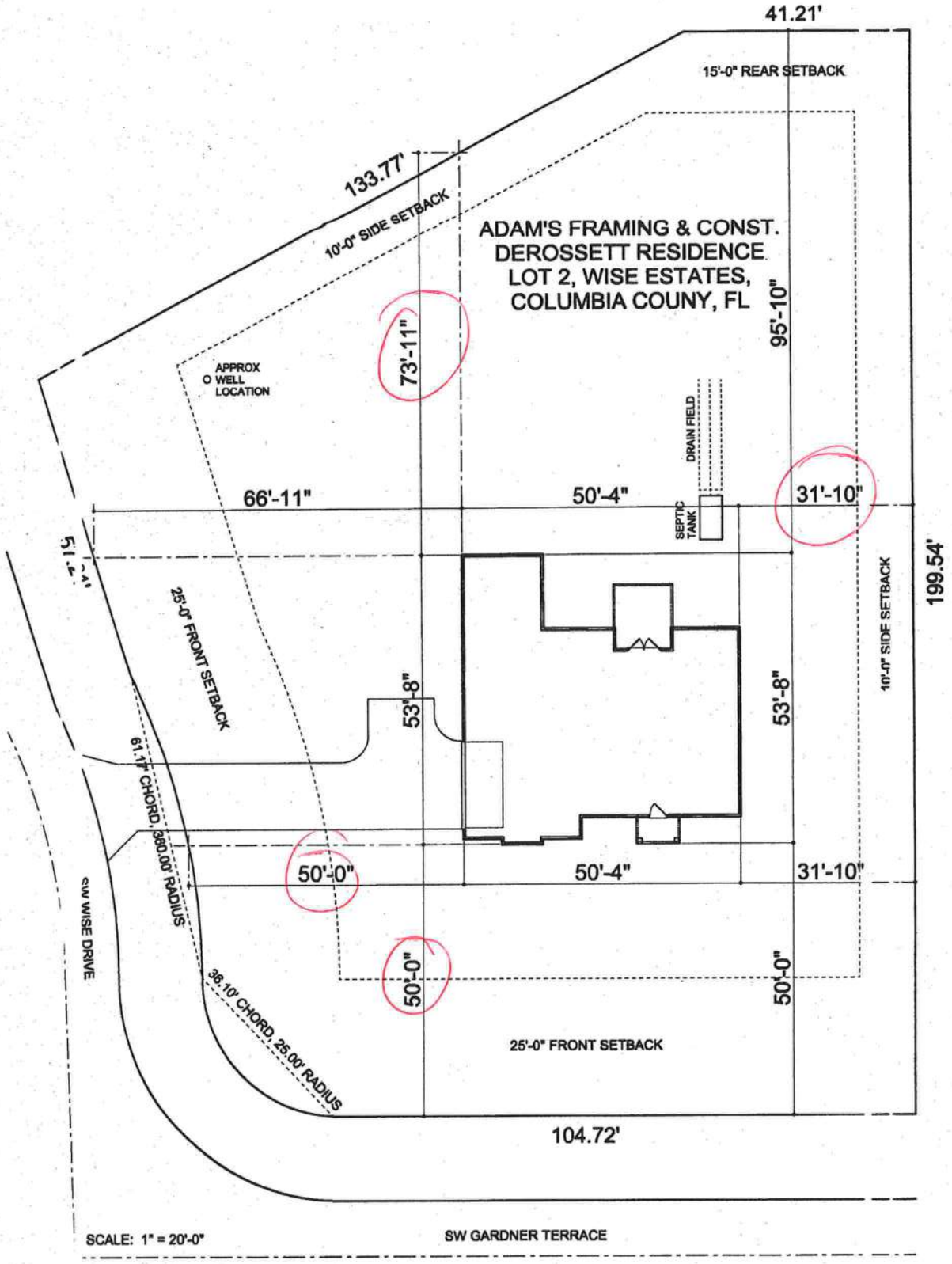
41.21'
15'-0" REAR SETBACK
133.77'
10'-0" SIDE SETBACK
ADAM'S FRAMING & CONST.
DEROSSETT RESIDENCE
LOT 2, WISE ESTATES,
COLUMBIA COUNY, FL
95'-10"
73'-11"
APPROX
O WELL
LOCATION
DRAIN FIELD
SEPTIC
TANK
66'-11"
50'-4"
31'-10"
199.54'
25'-0" FRONT SETBACK
53'-8"
53'-8"
10'-0" SIDE SETBACK
61.17' CHORD, 360.00' RADIUS
50'-0"
50'-4"
31'-10"
SW WISE DRIVE
50'-0"
50'-0"
36.10' CHORD, 25.00' RADIUS
25'-0" FRONT SETBACK
104.72'
SCALE: 1" = 20'-0"
SW GARDNER TERRACE

HALL'S PUMP & WELL SERVICE, INC.

SPECIALIZING IN 4"-6" WELLS

DONALD AND MARY HALL
OWNERS

PHONE (904) 752-
FAX (904) 755-70
LAKE CITY, FLORIDA
904 NW Main Blv

June 12, 2002

NOTICE TO ALL CONTRACTORS

Please be advised that due to the new building codes we will use a large capacity diaphram tank on all new wells. This will insure a minimum of one (1) minute draw down or one (1) minute refill. If a smaller diaphram tank is used then we will install a cycle stop valve which will produce the same results.

If you have any questions please feel free to call our office anytime.

Thank you,

Donald D. Hall
DDH/jk

LOT - BLOCKS

COLUMBIA COUNTY BUILDING DEPARTMENT

RESIDENTIAL MINIMUM PLAN REQUIREMENTS AND CHECKLIST FOR FLORIDA BUILDING CODE 2001
ONE (1) AND TWO (2) FAMILY DWELLINGS

ALL REQUIREMENTS ARE SUBJECT TO CHANGE
EFFECTIVE MARCH 1, 2002

ALL BUILDING PLANS MUST INDICATE THE FOLLOWING ITEMS AND INDICATE COMPLIANCE WITH CHAPTER 1606 OF THE FLORIDA BUILDING CODE 2001 BY PROVIDING CALCULATIONS AND DETAILS THAT HAVE THE SEAL AND SIGNATURE OF A CERTIFIED ARCHITECT OR ENGINEER REGISTERED IN THE STATE OF FLORIDA, OR ALTERNATE METHODOLOGIES, APPROVED BY THE STATE OF FLORIDA BUILDING COMMISSION FOR ONE-AND-TWO FAMILY DWELLINGS. FOR DESIGN PURPOSES THE FOLLOWING BASIC WIND SPEED AS PER FIGURE 1606 SHALL BE USED.

WIND SPEED LINE SHALL BE DEFINED AS FOLLOWS: THE CENTERLINE OF INTERSTATE 75.

1. **ALL BUILDINGS CONSTRUCTED EAST OF SAID LINE SHALL BE ------- 100 MPH**
2. **ALL BUILDINGS CONSTRUCTED WEST OF SAID LINE SHALL BE --------110 MPH**
3. **NO AREA IN COLUMBIA COUNTY IS IN A WIND BORNE DEBRIS REGION**

APPLICANT – PLEASE CHECK ALL APPLICABLE BOXES BEFORE SUBMITTAL

GENERAL REQUIREMENTS: Two (2) complete sets of plans containing the following:

Applicant	Plans Examiner	
☑	☐	All drawings must be clear, concise and drawn to scale ("Optional " details that are not used shall be marked void or crossed off). Square footage of different areas shall be shown on plans.
☑	☐	Designers name and signature on document (FBC 104.2.1). If licensed architect or engineer, official seal shall be affixed.
☑	☐	**Site Plan including:** a) Dimensions of lot b) Dimensions of building set backs c) Location of all other buildings on lot, well and septic tank if applicable, and all utility easements. d) Provide a full legal description of property.
☑	☐	**Wind-load Engineering Summary, calculations and any details required** a) Plans or specifications must state compliance with FBC Section 1606 b) The following information must be shown as per section 1606.1.7 FBC a. Basic wind speed (MPH) b. Wind importance factor (I) and building category c. Wind exposure – if more than one wind exposure is used, the wind exposure and applicable wind direction shall be indicated d. The applicable internal pressure coefficient e. Components and Cladding. The design wind pressure in terms of psf (kN/m²), to be used for the design of exterior component and cladding materials not specifally designed by the registered design professional
☑	☐	**Elevations including:**
☑	☐	a) All sides
☑	☐	b) Roof pitch
☑	☐	c) Overhang dimensions and detail with attic ventilation
☑	☐	d) Location, size and height above roof of chimneys
☑	☐	e) Location and size of skylights
☑	☐	f) Building height
☑	☐	e) Number of stories

Floor Plan including:

☐ ☐ a) Rooms labeled and dimensioned

☐ ☐ b) Shear walls

☐ ☐ c) Windows and doors (including garage doors) showing size, mfg., approval listing and attachment specs. (FBC 1707) and safety glazing where needed (egress windows in bedrooms to be shown)

☐ ☐ d) Fireplaces (gas appliance) (vented or non-vented) or wood burning with hearth

☐ ☐ e) Stairs with dimensions (width, tread and riser) and details of guardrails and handrails

☐ ☐ f) Must show and identify accessibility requirements (accesssable bathroom)

Foundation Plan including:

☐ ☐ a) Location of all load-bearing wall with required footings indicated as standard Or monolithic and dimensions and reinforcing

☐ ☐ b) All posts and/or column footing including size and reinforcing

☐ ☐ c) Any special support required by soil analysis such as piling

☐ ☐ d) Location of any vertical steel

Roof System:

☐ ☐ a) Truss package including:

1. Truss layout and truss details signed and sealed by Fl. Pro. Eng.
2. Roof assembly (FBC 104.2.1 Roofing system, materials, manufacturer, fastening requirements and product evaluation with wind resistance rating)

☐ ☐ b) Conventional Framing Layout including:

1. Rafter size, species and spacing
2. Attachment to wall and uplift
3. Ridge beam sized and valley framing and support details
4. Roof assembly (FBC 104.2.1 Roofing systems, materials, manufacturer, fastening requirements and product evaluation with wind resistance rating)

Wall Sections including:

☐ ☐ a) Masonry wall

1. All materials making up wall
2. Block size and mortar type with size and spacing of reinforcement
3. Lintel, tie-beam sizes and reinforcement
4. Gable ends with rake beams showing reinforcement or gable truss and wall bracing details
5. All required connectors with uplift rating and required number and size of fasteners for continuous tie from roof to foundation
6. Roof assembly shown here or on roof system detail (FBC 104.2.1 Roofing system, materials, manufacturer, fastening requirements and product evaluation with resistance rating)
7. Fire resistant construction (if required)
8. Fireproofing requirements
9. Shoe type of termite treatment (termiticide or alternative method)
10. Slab on grade
    a. Vapor retarder (6mil. Polyethylene with joints lapped 6 inches and sealed)
    b. Must show control joints, synthetic fiber reinforcement or Welded fire fabric reinforcement and supports
11. Indicate where pressure treated wood will be placed
12. Provide insulation R value for the following:
    a. Attic space
    b. Exterior wall cavity
    c. Crawl space (if applicable)

☑ ☐ b) Wood frame wall

1. All materials making up wall
2. Size and species of studs
3. Sheathing size, type and nailing schedule
4. Headers sized
5. Gable end showing balloon framing detail or gable truss and wall hinge bracing detail
6. All required fasteners for continuous tie from roof to foundation (truss anchors, straps, anchor bolts and washers)
7. Roof assembly shown here or on roof system detail (FBC104.2.1 Roofing system, materials, manufacturer, fastening requirements and product evaluation with wind resistance rating)
8. Fire resistant construction (if applicable)
9. Fireproofing requirements
10. Show type of termite treatment (termiticide or alternative method)
11. Slab on grade
    a. Vapor retarder (6Mil. Polyethylene with joints lapped 6 inches and sealed
    b. Must show control joints, synthetic fiber reinforcement or welded wire fabric reinforcement and supports
12. Indicate where pressure treated wood will be placed
13. Provide insulation R value for the following:
    a. Attic space
    b. Exterior wall cavity
    c. Crawl space (if applicable)

☐ ☐ c) Metal frame wall and roof (designed, signed and sealed by Florida Prof. Engineer or Architect)

Floor Framing System:

☑ ☐ a) Floor truss package including layout and details, signed and sealed by Florida Registered Professional Engineer

☑ ☐ b) Floor joist size and spacing

☑ ☐ c) Girder size and spacing

☑ ☐ d) Attachment of joist to girder

☑ ☐ e) Wind load requirements where applicable

Plumbing Fixture layout

Electrical layout including:

☑ ☐ a) Switches, outlets/receptacles, lighting and all required GFCI outlets identified

☑ ☐ b) Ceiling fans

☑ ☐ c) Smoke detectors

☑ ☐ d) Service panel and sub-panel size and location(s)

☑ ☐ e) Meter location with type of service entrance (overhead or underground)

☑ ☐ f) Appliances and HVAC equipment

HVAC information

☑ ☐ a) Manual J sizing equipment or equivalent computation

☑ ☐ b) Exhaust fans in bathroom

☑ ☐ **Energy Calculations** (dimensions shall match plans)

☐ ☐ **Gas System** Type (LP or Natural) Location and BTU demand of equipment

Disclosure Statement for Owner Builders

Notice Of Commencement

Private Potable Water

a) Size of pump motor

b) Size of pressure tank

c) Cycle stop valve if used

The Florida Department of Community Affairs
Building Code Information System

FLORIDA BUILDING CODE

Overview | User Registration | Organization Registration | User Authorization | Organization Search | Organization Accreditation

Select the organization type, status, or name to find an organization

Organization Type: Product Manufacturer

Manufact. Buildings

Approval Status: (ALL)

Organization Name: General American Door - Product Manufacturer

Cancel Search

Result List for Organizations

Displaying 1-1 of 1

Name	City	Contact	Phone	Type	Expire	Status
General American Door	Montgomery	James Campbell	6308593000	Product Manufacturer	01/01/2099	Approved
Org Code: PDM System ID: 3585			Site Link: www.gadco.com			

Displaying 1-1 of 1

REV.	DATE	BY	DESCRIPTION
A-A	11-10-00	DW	SEE E.C.N. 831

NOTES:

1. TESTED TO POSITIVE AND NEGATIVE 20 PSF DESIGN AND POSITIVE AND NEGATIVE 30 PSF TEST PRESSURES PER ASTM E-330
2. MAXIMUM SECTION HEIGHT= 21"
3. SECTION HEIGHTS OF 21.00" AND 19.50" ARE AVAILABLE AND MAY BE USED IN ANY COMBINATION TO ACHIEVE VARIOUS DOOR HEIGHTS.
4. WINDOWS MAY BE INSTALLED IN THE TOP SECTION (AS TESTED WITH 1/8" DSB GLASS OR EQUIVALENT) OR IN THE SECTION IMMEDIATELY BELOW THE TOP SECTION.
5. MINIMUM LENGTH OF ROLLER STEM IS 5½" (7" AS TESTED)
6. THE STRUT PLACEMENT ON DOOR MUST BE CONSISTENT WITH THE DOOR SHOWN.
7. STRUTS SECURED AT ALL LOCATIONS WITH TEK SCREWS.
8. QUANTITY OF SIDE LOCKS CAN BE 0,1, OR (2 AS TESTED).
9. △A DROP IN TYPE OF INSULATION IS OPTIONAL

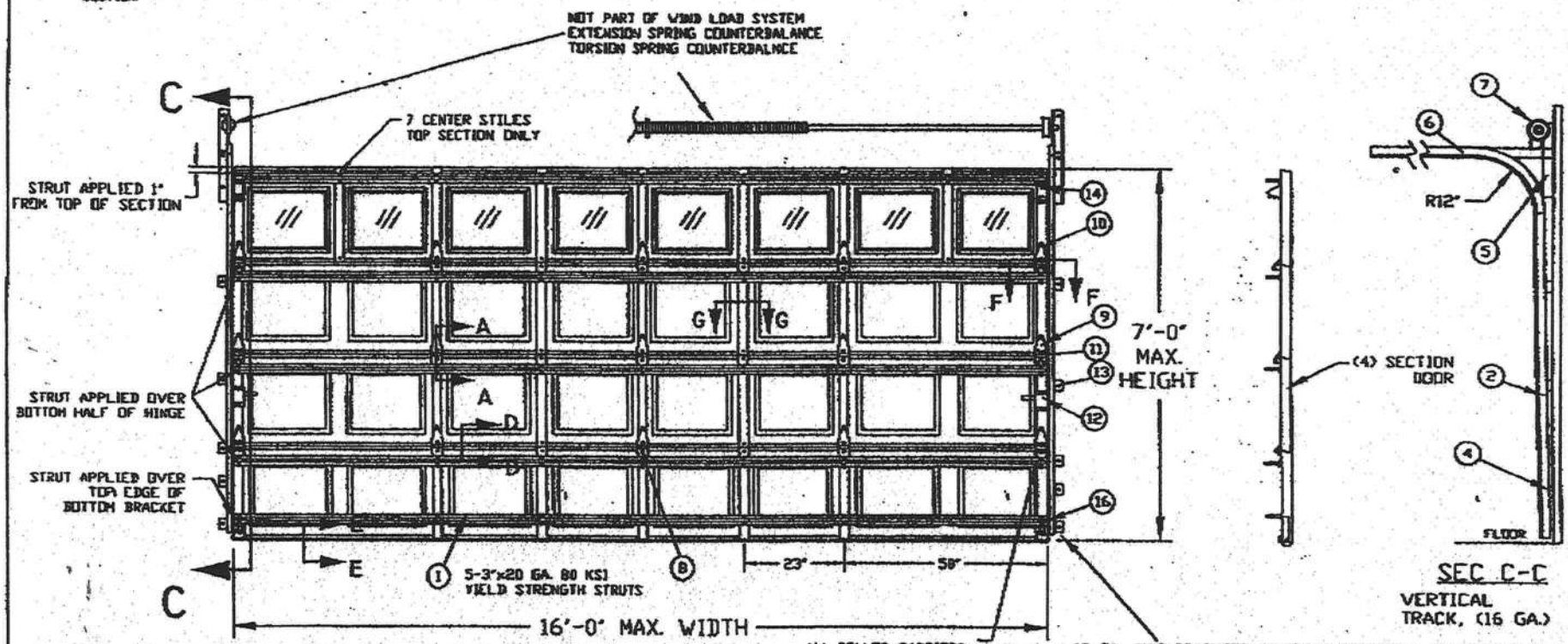

INSIDE ELEVATION

The seal on this drawing only certifies that the product(s) illustrated and described herein represent the configuration(s), dimensions and installation(s) of the door as tested.

NORTH CAROLINA PROFESSIONAL ENGINEER SEAL PE No. 024280 STEVEN R. STEVAN

LISTED SBCCI

REPORT No. 2202

TEST REPORTS ON FILE VIDEO 10/19/00 (00293)

DESIGN LOAD +20.0 PSF & -20.0 PSF
TEST LOAD +30.0 PSF & -30.0 PSF

GADCO DOORS
SERIES 7480, EXTERIOR STEEL =.017 MIN (AS TESTED)
SERIES 7825, EXTERIOR STEEL =.019" MIN △A
SERIES 7524, EXTERIOR STEEL =.024" MIN △A
(TESTED) WITH WINDOWS

MAXIMUM DOOR WIDTH	MAXIMUM DOOR HEIGHT	TYPICAL CTR. STILE SPACING	STRUTS 80 KSI SIZE	STRUTS 80 KSI QTY.	VERTICAL TRACK
16'	7'	23"	3"	5	2 IN.

GADCO®
GENERAL AMERICAN DOOR COMPANY
5050 BASELINE ROAD
MONTGOMERY, IL 60538

SCALE: 1/25 | APPROVED BY: | DRAWN BY: D. VIEDMAN
DATE: 10-20-00 | REVISED: (A) 11-10-00
DESCRIPTION: 16' X 7' MAX. RAISED PANEL STEEL DOOR -WINDLOAD ±20 PSF
PART NUMBER: PAGE 1 OF 2
DRAWING NUMBER: W13220-1

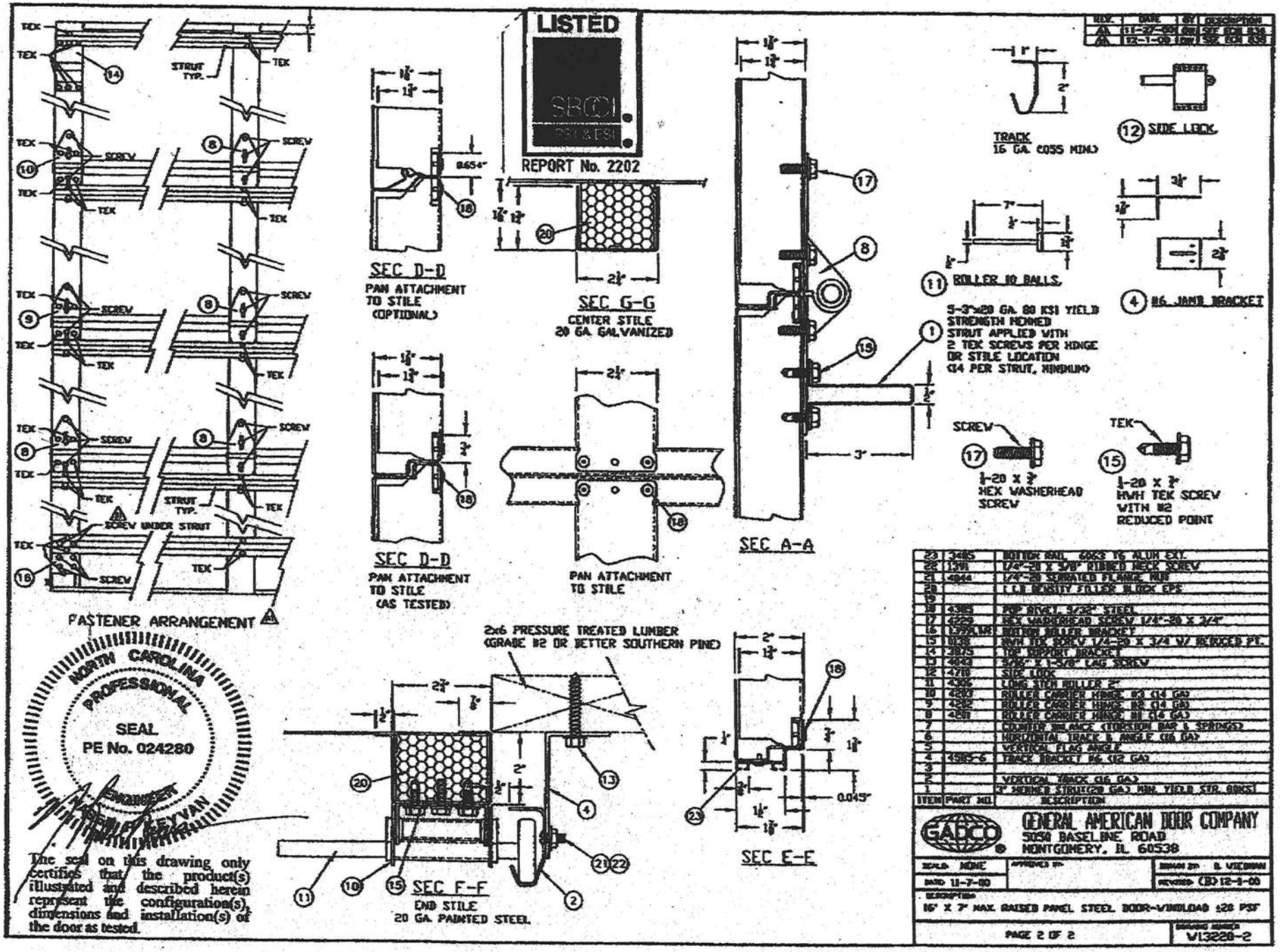
LISTED
SBCCI
REPORT No. 2202
FASTENER ARRANGEMENT
SCREW UNDER STRUT
STRUT TYP.
SEC D-D
PAN ATTACHMENT TO STILE (OPTIONAL)
SEC G-G
CENTER STILE 20 GA. GALVANIZED
SEC D-D
PAN ATTACHMENT TO STILE (AS TESTED)
PAN ATTACHMENT TO STILE
SEC A-A
TRACK 16 GA. (.055 MIN.)
SIDE LOCK
ROLLER 10 BALLS
#6 JAMB BRACKET
3-3"x20 GA. 80 KSI YIELD STRENGTH HEMMED STRUT APPLIED WITH 2 TEK SCREWS PER HINGE OR STILE LOCATION (14 PER STRUT, MINIMUM)
SCREW
1/4-20 X 3/4 HEX WASHERHEAD SCREW
TEK
1/4-20 X 3/4 HWH TEK SCREW WITH #2 REDUCED POINT
2x6 PRESSURE TREATED LUMBER (GRADE #2 OR BETTER SOUTHERN PINE)
SEC F-F
END STILE 20 GA. PAINTED STEEL
SEC E-E
0.045"
NORTH CAROLINA PROFESSIONAL SEAL PE No. 024280
ENGINEER
The seal on this drawing only certifies that the product(s) illustrated and described herein represent the configuration(s), dimensions and installation(s) of the door as tested.
23 3485 BOTTOM RAIL 6063 T6 ALUM EXT.
22 1391 1/4"-20 X 5/8" RIBBED NECK SCREW
21 4844 1/4"-20 SERRATED FLANGE NUT
20 LLB DENSITY FILLER BLOCK EPS
19
18 4385 POP RIVET, 3/32" STEEL
17 4229 HEX WASHERHEAD SCREW 1/4"-20 X 3/4"
16 1398LAM BOTTOM ROLLER BRACKET
15 1038 HWH TEK SCREW 1/4-20 X 3/4 W/ REDUCED PT.
14 3875 TOP SUPPORT BRACKET
13 4843 5/16" X 1-3/8" LAG SCREW
12 4710 SIDE LOCK
11 4306 LONG STEM ROLLER 2"
10 4287 ROLLER CARRIER HINGE #3 (14 GA)
9 4282 ROLLER CARRIER HINGE #2 (14 GA)
8 4281 ROLLER CARRIER HINGE #1 (14 GA)
7 COUNTER BALANCE (TORSION BAR & SPRINGS)
6 HORIZONTAL TRACK & ANGLE (16 GA)
5 VERTICAL FLAG ANGLE
4 4585-6 TRACK BRACKET #6 (12 GA)
3
2 VERTICAL TRACK (16 GA)
1 3" HEMMED STRUT (20 GA) MIN. YIELD STR. 80KSI
ITEM PART NO. DESCRIPTION
GADCO
GENERAL AMERICAN DOOR COMPANY
5050 BASELINE ROAD
MONTGOMERY, IL 60538
SCALE NONE
DATE 11-7-00
DRAWN BY B. VIEDMAN
REVISED (B) 12-1-00
16' X 7' MAX. RAISED PANEL STEEL DOOR-WINDLOAD ±28 PSF
PAGE 2 OF 2
W13228-2

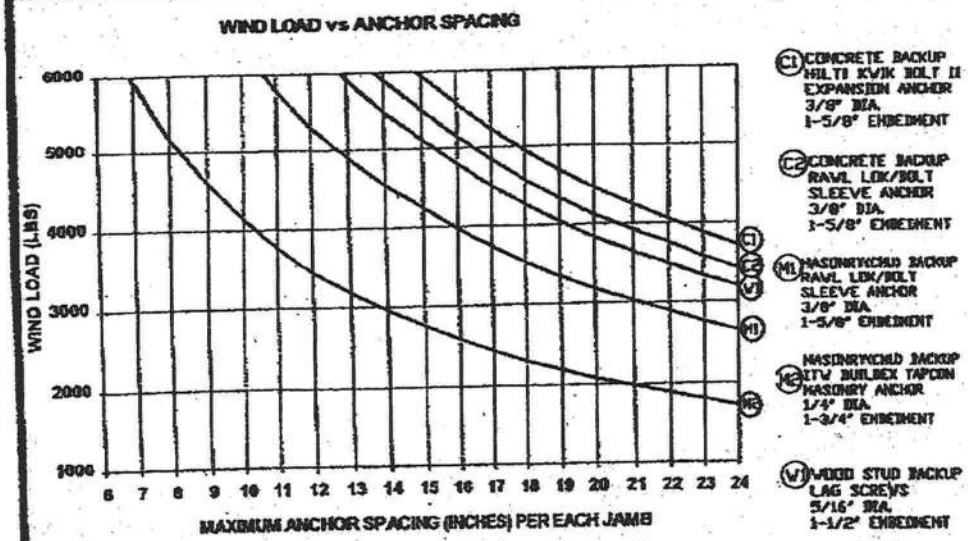

DESIGN LOAD $\frac{(LBS)}{FT^2}$ X GARAGE DOOR AREA(WIDTH-FT X HEIGHT-FT) = WIND LOAD(LBS)

EXAMPLE

$\frac{30\ LBS}{FT^2}$ X (16 FT WIDE X 8 FT HIGH) = 3840 LBS

- C1 USE 22" SPACING
- C2 USE 21" SPACING
- V1 USE 19" SPACING
- M1 USE 16" SPACING
- M2 USE 10" SPACING

SEE NOTE 11 FOR ADDITIONAL REQUIRED 2X6 WOOD JAMB ANCHORS

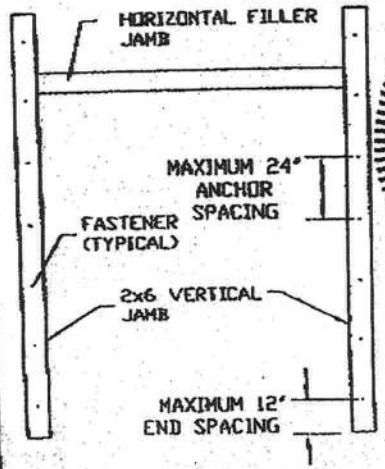

NORTH CAROLINA PROFESSIONAL SEAL PE No. 024280 ENGINEER NASER R KEYVAN

NASER R KEYVAN LICENSE NO. 53774 STATE OF FLORIDA PROFESSIONAL ENGINEER

3/8/2002

2x6 JAMB TO SUPPORTING STRUCTURE ATTACHMENT

2x6 PRESSURE TREATED (GRADE #2 OR BETTER SOUTHERN PINE) WOOD JAMB SHALL BE ANCHORED TO BUILDING WOOD FRAME, GROUTED AND REINFORCED CONCRETE MASONRY UNIT (CMU) WALLS OR COLUMNS, OR REINFORCED CONCRETE COLUMNS.

NOTES:

1) ALL DOOR OPENING SURROUNDING STRUCTURE TO BE DESIGNED BY REGISTERED ENGINEER OR ARCHITECT WITH DUE CONSIDERATION GIVEN TO INSTALLATIONS USING CENTER "HURRICANE" POSTS.

2) ALL DOOR OPENING STRUCTURE AND FASTENERS TO COMPLY WITH ALL APPLICABLE CODES INCLUDING SBCCI "STANDARD FOR HURRICANE RESISTANT RESIDENTIAL CONSTRUCTION" SSTD 10," CURRENT EDITION.

3) ALL FASTENERS TO BE INSTALLED IN STRICT ACCORDANCE WITH MANUFACTURER'S SPECIFICATIONS, INSTRUCTIONS AND RECOMMENDATIONS.

4) WOOD FRAME BUILDINGS: STUDS AT EACH SIDE OF DOOR OPENING SHALL BE PROPERLY DESIGNED, CONNECTED, ANCHORED AND SHALL CONSIST OF A MINIMUM OF THREE (3) LAMINATIONS OF 2X6 PRESSURE TREATED SOUTHERN PINE (#2 GRADE OR BETTER) WALL STUDS CONTINUOUS FROM FOOTING TO DOUBLE TOP PLATE.

5) REINFORCED CMU OR CONCRETE: 2X6 WOOD JAMB SHALL BE ANCHORED TO SOLIDLY GROUTED AND REINFORCED CONCRETE MASONRY UNIT (CMU) WALLS OR COLUMNS, OR REINFORCED CONCRETE COLUMNS. ANCHOR SPACING AND EMBEDMENT IS BASED ON CONCRETE MASONRY UNITS COMPLYING WITH ASTM C90 WITH A MINIMUM NET AREA COMPRESSIVE STRENGTH OF 2150 PSI; GROUT WITH A MINIMUM COMPRESSIVE STRENGTH OF 2000 PSI; REINFORCED CONCRETE COLUMNS WITH A MINIMUM COMPRESSIVE STRENGTH OF 2500 PSI.

6) EMBEDMENTS LISTED ARE THE MINIMUM ALLOWABLE EMBEDMENTS.

7) ANCHORS FOR CONCRETE AND CONCRETE MASONRY UNITS (CMU) SHALL HAVE A MINIMUM 3" EDGE DISTANCE FROM ALL EDGES OF CONCRETE OR CONCRETE MASONRY UNITS. ANCHORS FOR CONCRETE AND CMU SHALL HAVE A MINIMUM SPACING OF 3-3/4"

8) LAG SCREWS SHALL BE CENTERED IN ONE OF THE 1-1/2" DIMENSION FACES OF THE TRIPLE 2X6 WALL STUDS.

9) WASHERS ARE REQUIRED ON ALL FASTENERS.

10) THE WIND LOAD VS. ANCHOR SPACING CHART IS FOR A MAXIMUM DOOR SIZE OF 18' X 8' AT A MAXIMUM 42 PSF DESIGN WIND LOAD.

11) FOR THE UPPER THREE INDIVIDUAL STEEL JAMB BRACKETS, BRACKETS SHALL BE CENTERED BETWEEN THE TWO CLOSEST 2X6 WOOD JAMB ANCHORS. IF THE STEEL JAMB BRACKET IS NOT CENTERED BETWEEN THE TWO CLOSEST 2X6 WOOD JAMB ANCHORS, ADD AN ADDITIONAL 2X6 WOOD JAMB ANCHOR NEAR THAT STEEL BRACKET TO INSURE THAT THE LOAD FROM THE STEEL BRACKET IS EQUALLY TRANSFERRED TO TWO WOOD JAMB ANCHORS.

GADCO®
GENERAL AMERICAN DOOR COMPANY
5050 BASELINE ROAD
MONTGOMERY, IL 60538

SCALE NONE	APPROVED BY	DRAWN BY DW
DATE 8-30-99		REVISED
DESCRIPTION JAMB TO STRUCTURE ATTACHMENT FOR WIND LOADED GARAGE DOORS		
	MASTER DRAWING NUMBER A10560	DRAWING NUMBER

Window

FLORIDA DEPARTMENT OF Community Affairs

Community Affairs

Product Approval
USER: Public User

FL #	FL5108
Application Type	New
Code Version	2004
Application Status	Approved
Comments	
Archived	☐
Product Manufacturer	MI Windows and Doors
Address/Phone/Email	650 W Market St Gratz, PA 17030 (717) 365-3300 ext 2101 surich@miwd.com
Authorized Signature	Steven Urich surich@miwd.com
Technical Representative Address/Phone/Email	
Quality Assurance Representative Address/Phone/Email	

A·L·I

(Validator / Operations Administrator)

AAMA
CERTIFICATION PROGRAM

AUTHORIZATION FOR PRODUCT CERTIFICATION

MI Windows & Doors, Inc.
P.O. Box 370
Gratz, PA 17030-0370

Attn: Bill Emley

The product described below is hereby approved for listing in the next issue of the AAMA Certified Products Directory. The approval is based on successful completion of tests, and the reporting to the Administrator of the results of tests, accompanied by related drawings, by an AAMA Accredited Laboratory.

1. The listing below will be added to the next published AAMA Certified Products Directory.

SPECIFICATION	RECORD OF PRODUCT TESTED				LABEL ORDER NO.
AAMA/NWWDA 101/I.S. 2-97 H-R55*-36x62					
COMPANY AND PLANT LOCATION	CODE NO.	SERIES MODEL & PRODUCT DESCRIPTION	MAXIMUM SIZE TESTED		
			FRAME	SASH	
MI Windows & Doors, Inc. (Oldsmar, FL) MI Windows & Doors, Inc. (Smyrna, TN)	MTL-8 MTL-9	185/3185 SH (Fin) (AL)(O)(X)(DG) (ASTM)	3'0" x 5'2"	2'10" x 2'7"	By Request

2. This Certification will expire May 14, 2008 and requires validation until then by continued listing in the current AAMA Certified Products Directory.

3. Product Tested and Reported by: Architectural Testing, Inc.

   Report No.: 01-50360.02

   Date of Report: June 14, 2004

NOTE: PLEASE REVIEW, AND ADVISE ALI IMMEDIATELY IF DATA, AS SHOWN, NEEDS CORRECTION.

Date: August 1, 2005

Validated for Certification:

Associated Laboratories, Inc.

Authorized for Certification:

American Architectural Manufacturers Association

cc: AAMA
JGS/df
ACP-04 (Rev. 5/03)

"ONE BY" (3/4") BUCKS (SHOWN)

1. Before installation, caulk back of flange, or face of buck.
2. 3/16" dia. masonry Tapcon must be of a length to have 1 1/4" embedment into masonry or concrete.
3. Shim as required with load bearing shims at each installation anchor as shown.
4. All factory applied holes not designated for Tapcon anchor should be filled with #10 screws of sufficient length to provide min. 5/8" embedment into wood buck.
5. Letter designations on the Tapcon location chart indicate where anchors are to be installed using the elevation as a key.
6. If exact window size is not given, use anchor quantity for next larger window in chart.
7. For continuous head and sill twins & triples, use the same fastener schedule for each unit in the main frame except ignore the intermediate jamb.

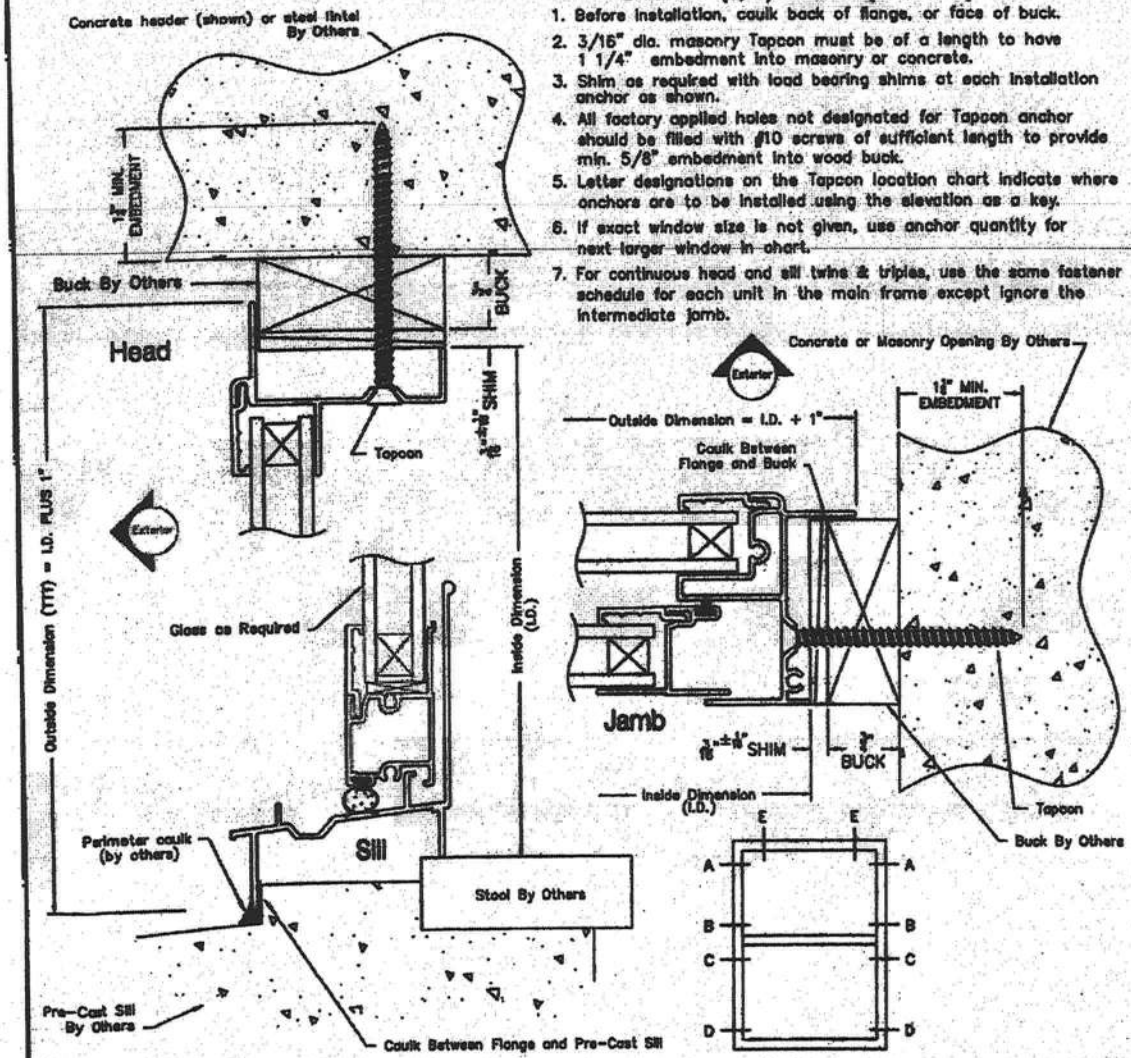

*"TAPCON" TYPE HARDENED MASONRY SCREWS INCLUDE TAPCON, RAWL, & SIMPSON

"TWO BY" (1 1/2") BUCKS

"TWO BY" bucks are engineered and fastened to the masonry opening BY OTHERS.

Follow the same instructions and fastener requirements for "one by" bucks except use #10 screws of sufficient length for 1 1/4" minimum embedment into buck.

HOME PRODUCTS
BetterBilt / Capitol

*** TAPCON LOCATION CHART**

CODE SIZE	WINDOW ID SIZE	FASTENER LOCATIONS: UP TO DP35	DP35.1 TO DP55	DP55.1 TO DP69.3
12	18 1/8 x 25	A, D & E	A, D & E	A, D & E
13	18 1/8 x 37 3/8	A, D & E	A, D & E	A, D & E
14	18 1/8 x 49 5/8	A, D & E	A, D & E	A, D & E
15	18 1/8 x 62	A, D & E	A, D & E	A, D & E
16	18 1/8 x 71	A, D & E	A, D & E	A, D & E
17	18 1/8 x 83	A, D & E	A, D & E	A, D & E
1/2 32	25 1/2 x 25	A, D & E	A, D & E	A, D & E
1/2 33	25 1/2 x 37 3/8	A, D & E	A, D & E	A, D & E
1/2 34	25 1/2 x 49 5/8	A, D & E	A, D & E	A, D & E
1/2 35	25 1/2 x 62	A, D & E	A, D & E	A, D & E
1/2 36	25 1/2 x 71	A, D & E	A, D & E	A, D & E
1/2 37	25 1/2 x 83	A, D & E	A, D & E	A, C, D & E
22	36 x 25	A, D & E	A, D & E	A, D & E
23	36 x 37 3/8	A, D & E	A, D & E	A, D & E
24	36 x 49 5/8	A, D & E	A, D & E	A, D & E
25	36 x 62	A, D & E	A, D & E	A, D & E
26	36 x 71	A, D & E	A, D & E	A, C, D & E
27	36 x 83	A, D & E	A, C, D & E	A, C, D & E
32	52 1/8 x 25	A, D & E	A, D & E	A, D & E
33	52 1/8 x 37 3/8	A, D & E	A, D & E	A, D & E
34	52 1/8 x 49 5/8	A, D & E	A, D & E	A, D & E
35	52 1/8 x 62	A, D & E	A, C, D & E	A, C, D & E
36	52 1/8 x 71	A, D & E	A, C, D & E	A, B, C, D & E
37	52 1/8 x 83	A, D & E	A, C, D & E	A, B, C, D & E
2040	23 3/8 x 47 5/8	A, D & E	A, D & E	A, D & E
2050	23 3/8 x 59 5/8	A, D & E	A, D & E	A, D & E
2060	23 3/8 x 71 5/8	A, D & E	A, D & E	A, D & E
2070	23 3/8 x 83 5/8	A, D & E	A, D & E	A, D & E
3040	35 3/8 x 47 5/8	A, D & E	A, D & E	A, D & E
3050	35 3/8 x 59 5/8	A, D & E	A, D & E	A, D & E
3060	35 3/8 x 71 5/8	A, D & E	A, D & E	A, C, D & E
3070	35 3/8 x 83 5/8	A, D & E	A, C, D & E	A, C, D & E
4040	47 3/8 x 47 5/8	A, D & E	A, D & E	A, D & E
4050	47 3/8 x 59 5/8	A, D & E	A, D & E	A, C, D & E
4060	47 3/8 x 71 5/8	A, D & E	A, C, D & E	A, C, D & E
4070	47 3/8 x 83 5/8	A, D & E	A, C, D & E	A, B, C, D & E
4450	51 3/8 x 59 5/8	A, D & E	A, D & E	A, C, D & E
4460	51 3/8 x 71 5/8	A, D & E	A, C, D & E	A, B, C, D & E
4470	51 3/8 x 83 5/8	A, D & E	A, C, D & E	A, B, C, D & E

REV.	REVISION	DATE	BY
A	REMOVED SILL INSTALLATION ANCHOR SCREWS	7/14/04	SW

Product Technology Corporation
Winter Park, Florida 32789
Phone 407.622.6334 Fax 407.622.6335

MI HOME PRODUCTS
GRATZ, PA

TITLE: 185/3185 SINGLE HUNG FLANGE FRAME INSTALLATION DETAILS & FASTENER SCHEDULE

DRAWN BY: DRL	DATE: 06/15/04	
SCALE: N.T.S.	DWG. NO.: MIHP0059	
REV. LETTER: A	SHEET: 1 OF 1	

XX
Glazed Outswing Unit

[redacted]

WOOD-EDGE STEEL DOORS

APPROVED ARRANGEMENT:

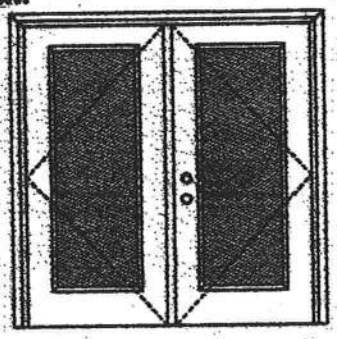

Note:
Units of other sizes are covered by this report as long as the panels used do not exceed 3'0" x 6'8".

Double Door
Maximum unit size = 6'0" x 6'8"

Design Pressure
+40.5/-40.5
Limited water unless special threshold design is used.

Large Missile Impact Resistance
Hurricane protective system (shutters) is REQUIRED.

Actual design pressure and impact resistant requirements for a specific building design and geographic location is determined by ASCE 7-national, state or local building codes specify the edition required.

MINIMUM ASSEMBLY DETAIL:

Compliance requires that minimum assembly details have been followed -- see MAD-WL-MA0012-02 and MAD-WL-MA0041-02.

MINIMUM INSTALLATION DETAIL:

Compliance requires that minimum installation details have been followed -- see MID-WL-MA0002-02.

APPROVED DOOR STYLES:

1/4 GLASS:


100 Series


133, 135 Series


135 Series


680 Series


822 Series

1/2 GLASS:


165 Series*


166, 160 Series*


120 Series*


200 Series*


12 R/L, 23 R/L, 24 R/L Series*


107 Series*


108 Series


304 Series

*This glass kit may also be used in the following door styles: 5-panel; 5-panel with scroll; Eyebrow 5-panel; Eyebrow 5-panel with scroll.

Johnson EntrySystems

March 29, 2002
Our continuing program of product improvement makes specifications, design and product detail subject to change without notice.

PREMDOR Collection Premium Quality Doors

Exclusively from Masonite
Masonite International Corporation

GLASS INSERT IN DOOR OR SIDELITE PANEL

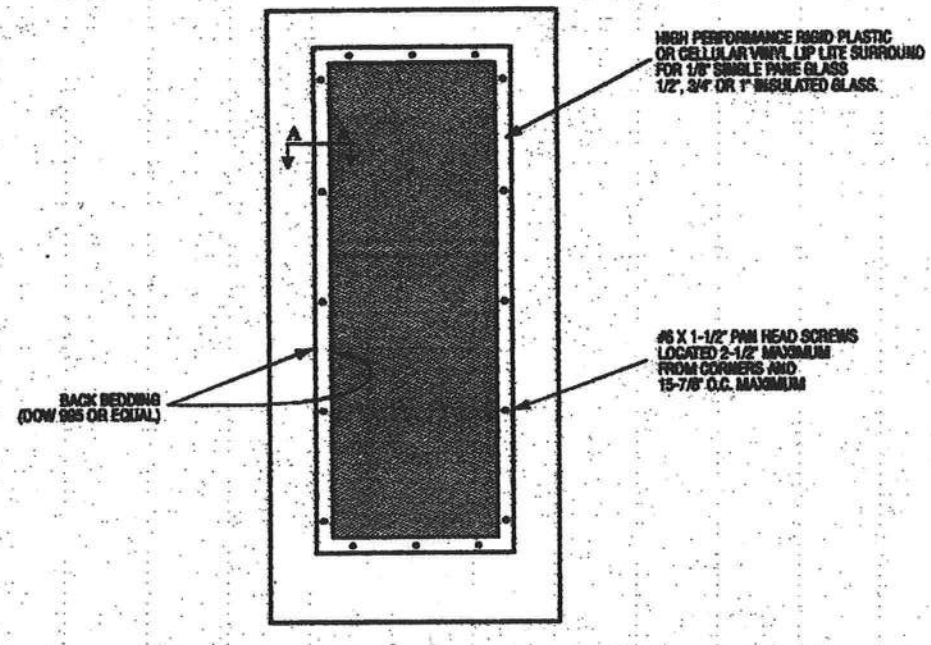

SECTION A-A
TYPICAL RIGID PLASTIC LIP LITE SURROUND

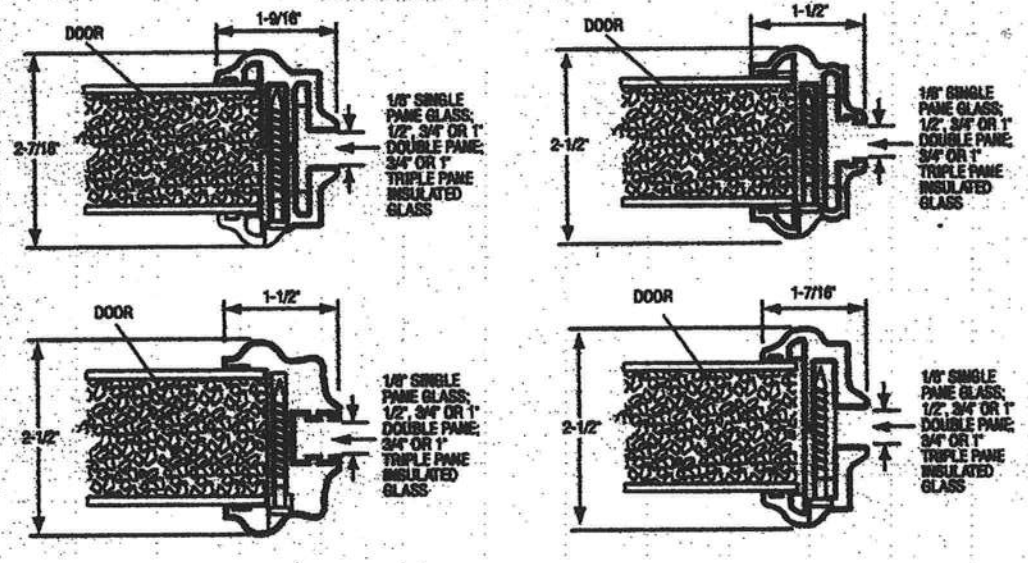

XX
Glazed Outswing Unit

CCP-WL-JH4162-02

WOOD-EDGE STEEL DOORS

APPROVED DOOR STYLES:

3/4 GLASS:


404 Series


418 Series


450 Series

FULL GLASS:


169 Series

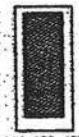
114, 120, 122 Series


152 Series


149 Series


300 Series

CERTIFIED TEST REPORTS:

NCTL 210-1897-7, 8, 9, 10, 11, 12; NCTL 210-1864-5, 6, 7, 8; NCTL 210-2178-1, 2, 3

Certifying Engineer and License Number: Barry D. Portney, P.E. / 16258.

Unit Tested in Accordance with Miami-Dade BCCO PA202.

Evaluation report NCTL-210-2794-1

Door panels constructed from 26-gauge 0.017" thick steel skins. Both stiles constructed from wood. Top end rails constructed of 0.041" steel. Bottom end rails constructed of 0.021" steel. Interior cavity of slab filled with rigid polyurethane foam core. Slab glazed with insulated glass mounted in a rigid plastic lip lite surround.

Frame constructed of wood with an extruded aluminum bumper threshold.

PRODUCT COMPLIANCE LABELING:

TESTED IN
ACCORDANCE WITH
MIAMI-DADE BCCO PA202

COMPANY NAME
CITY, STATE

To the best of my knowledge and ability the above side-hinged exterior door unit conforms to the requirements of the 2001 Florida Building Code, Chapter 17 (Structural Tests and Inspections).

Kurt L Balthazor

State of Florida, Professional Engineer
Kurt Balthazor, P.E. – License Number 56533

Johnson Entry Systems

March 29, 2002
Our continuing program of product improvement makes specifications, design and product details subject to change without notice.

PREMDOR Collection Premium Quality Doors

Exclusively from Masonite
Masonite International Corporation

XX
Unit

MAD WL-MADC12-02

OUTSWING UNITS WITH DOUBLE DOOR

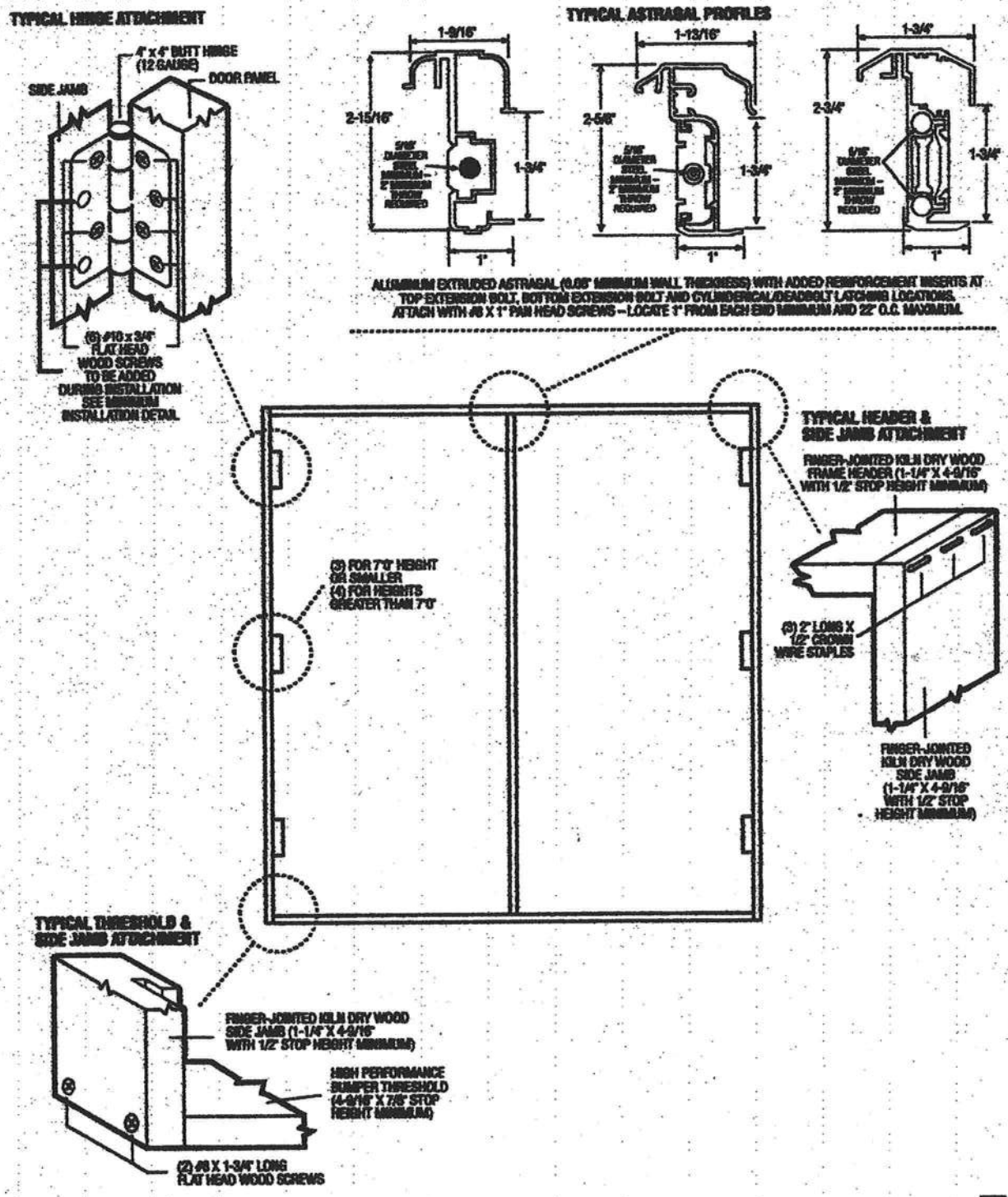

March 29, 2002
Our continuing program of product improvement makes specifications, design and product detail subject to change without notice.

PREMDOR Collection Premium Quality Doors

Exclusively from Masonite®
Masonite International Corporation

XX
Unit

[redacted]

DOUBLE DOOR

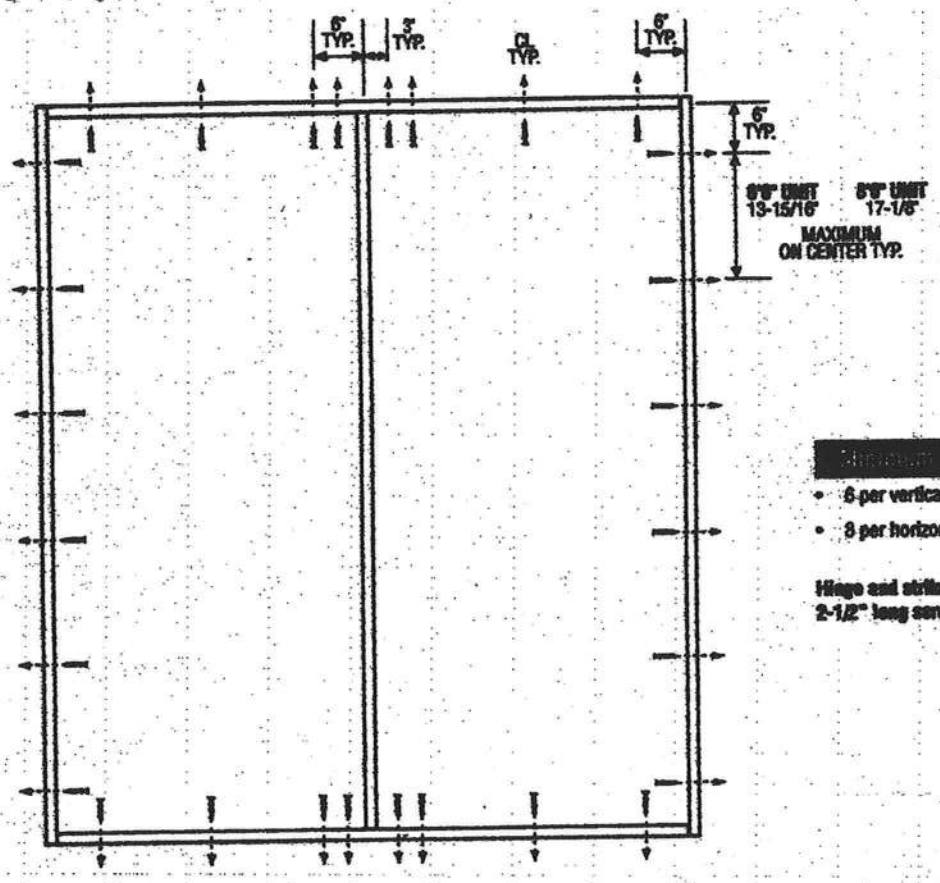

[redacted]

- 6 per vertical framing member
- 8 per horizontal framing member

Hinge and strike plates require two 2-1/2" long screws per location.

Latching Hardware:

- Compliance requires that GRADE 2 or better (ANSI/BHMA A156.2) cylinderical and deadlock hardware be installed.

Notes:

1. Anchor calculations have been carried out with the lowest (least) fastener rating from the different fasteners being considered for use. Fasteners analyzed for this unit include #8 and #10 wood screws or 3/16" Tapcons.
2. The wood screw single shear design values come from Table 11.3A of ANSI/AF & PA NDS for southern pine lumber with a side member thickness of 1-1/4" and achievement of minimum embedment. The 3/16" Tapcon single shear design values come from the ITW and ELCO Dade Country approvals respectively, each with minimum 1-1/4" embedment.
3. Wood bucks by others, must be anchored properly to transfer loads to the structure.

March 29, 2002

FLORIDA DEPARTMENT OF Community Affairs

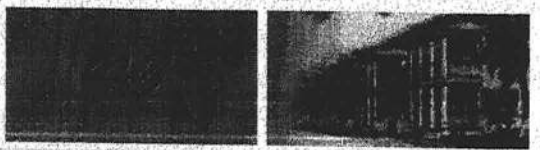

Community Affairs

Product Approval
USER: Public User

FL #	FL1956-R1
Application Type	Revision
Code Version	2004
Application Status	Approved
Comments	
Archived	☐
Product Manufacturer	TAMKO Building Products, Inc.
Address/Phone/Email	PO Box 1404 Joplin, MO 64802 (800) 641-4691 ext 2394 fred_oconnor@tamko.com
Authorized Signature	Frederick O'Connor fred_oconnor@tamko.com
Technical Representative	Frederick J. O'Connor
Address/Phone/Email	PO Box 1404 Joplin, MO 64802 (800) 641-4691 fred_oconnor@tamko.com

Quality Assurance Representative Address/Phone/Email	
Category	Roofing
Subcategory	Asphalt Shingles
Compliance Method	Certification Mark or Listing
Certification Agency	Underwriters Laboratories Inc.

Referenced Standard and Year (of Standard)	**Standard**	**Year**
	ASTM D 3462	2001

Equivalence of Product Standards Certified By	
Product Approval Method	Method 1 Option A
Date Submitted	06/09/2005
Date Validated	06/20/2005
Date Pending FBC Approval	06/25/2005
Date Approved	06/29/2005

Summary of Products

FL #	Model, Number or Name	Description

3

slopes of 2:12 or greater. Not approved for use in HVHZ.

Back Next

DCA Administration
Department of Community Affairs
Florida Building Code Online
Codes and Standards
2555 Shumard Oak Boulevard
Tallahassee, Florida 32399-2100
(850) 487-1824, Suncom 277-1824, Fax (850) 414-8436

Product Approval Accepts:

4

Underwriters Laboratories Inc.

Northbrook Division
333 Pfingsten Road
Northbrook, IL 60062-2096 USA
www.ul.com
tel: 1 847 272 8800

June 17, 2005

Tamko Roofing Products
Ms. Kerri Eden
P.O. Box 1404
220 W. 4th Street
Joplin, MO 64802-1404

Our Reference: R2919

This is to confirm that "Elite Glass-Seal AR", "Heritage 30 AR", "Heritage 50 AR", "Glass-Seal AR" manufactured at Tuscaloosa, AL and "Elite Glass-Seal AR", "Heritage 30 AR", "Heritage XL AR", "Heritage 50 AR" manufactured at Frederick, MD and "Heritage 30 AR", "Heritage XL AR", and "Heritage 50 AR" manufactured in Dallas, TX are UL Listed asphalt glass mat shingles and have been evaluated in accordance with ANSI/UL 790, Class A (ASTM E108), ASTM D3462, ASTM D3161 or UL 997 modified to 110 mph when secured with four nails.

Let me know if you have any further questions.

Very truly yours,

Alpesh Patel (Ext. 42522)
Engineer Project
Fire Protection Division

Reviewed by,

Randall K. Laymon (Ext. 42687)
Engineer Sr Staff
Fire Protection Division

4

5

TAMKO BUILDING PRODUCTS

Application Instructions for

• HERITAGE® VINTAGE™ AR – Phillipsburg, KS

LAMINATED ASPHALT SHINGLES

THESE ARE THE MANUFACTURER'S APPLICATION INSTRUCTIONS FOR THE ROOFING CONDITIONS DESCRIBED. TAMKO BUILDING PRODUCTS, INC. ASSUMES NO RESPONSIBILITY FOR LEAKS OR OTHER ROOFING DEFECTS RESULTING FROM FAILURE TO FOLLOW THE MANUFACTURER'S INSTRUCTIONS.

THIS PRODUCT IS COVERED BY A LIMITED WARRANTY, THE TERMS OF WHICH ARE PRINTED ON THE WRAPPER.

IN COLD WEATHER (BELOW 40°F), CARE MUST BE TAKEN TO AVOID DAMAGE TO THE EDGES AND CORNERS OF THE SHINGLES.

IMPORTANT: It is not necessary to remove the plastic strip from the back of the shingles.

1. ROOF DECK

These shingles are for application to roof decks capable of receiving and retaining fasteners, and to inclines of not less than 2 in. per foot. For roofs having pitches 2 in. per foot to less than 4 in. per foot, refer to special instructions titled "Low Slope Application". Shingles must be applied properly. TAMKO assumes no responsibility for leaks or defects resulting from improper application, or failure to properly prepare the surface to be roofed over.

NEW ROOF DECK CONSTRUCTION: Roof deck must be smooth, dry and free from warped surfaces. It is recommended that metal drip edges be installed at eaves and rakes.

PLYWOOD: All plywood shall be exterior grade as defined by the American Plywood Association. Plywood shall be a minimum of 3/8 in. thickness and applied in accordance with the recommendations of the American Plywood Association.

SHEATHING BOARDS: Boards shall be well-seasoned tongue-and-groove boards and not over 6 in. nominal width. Boards shall be a 1 in. nominal minimum thickness. Boards shall be properly spaced and nailed.

TAMKO does not recommend re-roofing over existing roof.

2. VENTILATION

Inadequate ventilation of attic spaces can cause accumulation of moisture in winter months and a build up of heat in the summer. These conditions can lead to:

1. Vapor Condensation
2. Buckling of shingles due to deck movement.
3. Rotting of wood members.
4. Premature failure of roof.

To insure adequate ventilation and circulation of air, place louvers of sufficient size high in the gable ends and/or install continuous ridge and soffit vents. FHA minimum property standards require one square foot of net free ventilation area to each 150 square feet of space to be vented, or one square foot per 300 square feet if a vapor barrier is installed on the warm side of the ceiling or if at least one half of the ventilation is provided near the ridge. If the ventilation openings are screened, the total area should be doubled.

IT IS PARTICULARLY IMPORTANT TO PROVIDE ADEQUATE VENTILATION.

3. FASTENERS

WIND CAUTION: Extreme wind velocities can damage these shingles after application when proper sealing of the shingles does not occur. This can especially be a problem if the shingles are applied in cooler months or in areas on the roof that do not receive direct sunlight. These conditions may impede the sealing of the adhesive strips on the shingles. The inability to seal down may be compounded by prolonged cold weather conditions and/or blowing dust. In these situations, hand sealing of the shingles is recommended. Shingles must also be fastened according to the fastening instructions described below.

Correct placement of the fasteners is critical to the performance of the shingle. If the fasteners are not placed as shown in the diagram and described below, this will result in the termination of TAMKO's liabilities under the limited warranty. TAMKO will not be responsible for damage to shingles caused by winds in excess of the applicable miles per hour as stated in the limited warranty. See limited warranty for details.

FASTENING PATTERNS: Fasteners must be placed 6 in. from the top edge of the shingle located horizontally as follows:

1) Standard Fastening Pattern. (For use on decks with slopes 2 in. per foot to 21 in. per foot.) One fastener 1-1/2 in. back from each end, one 10-3/4 in. back from each end and one 20 in. from one end of the shingle for a total of 5 fasteners. (See standard fastening pattern illustrated below).

STANDARD FASTENING PATTERN

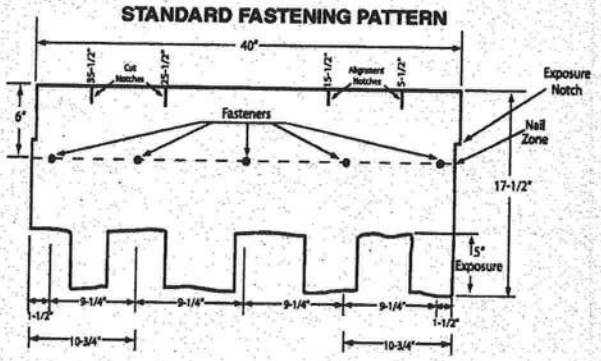

2) Mansard or Steep Slope Fastening Pattern. (For use on decks with slopes greater than 21 in. per foot.) Use standard nailing instructions with four additional nails placed 6 in. from the butt edge of the shingle making certain nails are covered by the next (successive) course of shingles.

(Continued)

TAMKO® BUILDING PRODUCTS

(CONTINUED from Pg. 1)

• HERITAGE® VINTAGE™ AR – Phillipsburg, KS
LAMINATED ASPHALT SHINGLES

Each shingle tab must be sealed underneath with quick setting asphalt adhesive cement immediately upon installation. Spots of cement must be equivalent in size to a $.25 piece and applied to shingles with a 5 in. exposure, use 9 fasteners per shingle.

MANSARD FASTENING PATTERN

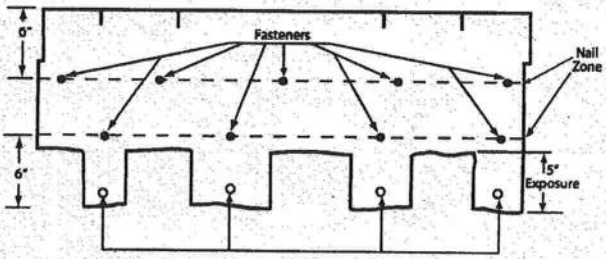

Apply under each tab 1" diameter asphalt adhesive cement.

NAILS: TAMKO recommends the use of nails as the preferred method of application. Standard type roofing nails should be used. Nail shanks should be made of minimum 12 gauge wire, and a minimum head diameter of 3/8 in. Nails should be long enough to penetrate 3/4 in. into the roof deck. Where the deck is less than 3/4 in. thick, the nails should be long enough to penetrate completely through plywood decking and extend at least 1/8 in. through the roof deck. Drive nail head flush with the shingle surface.

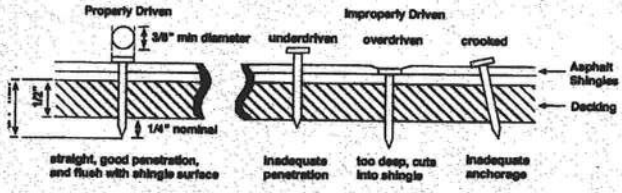

4. UNDERLAYMENT

UNDERLAYMENT: An underlayment consisting of asphalt saturated felt must be applied over the entire deck before the installation of TAMKO shingles. Failure to add underlayment can cause premature failure of the shingles and leaks which are not covered by TAMKO's limited warranty. Apply the felt when the deck is dry. On roof decks 4 in. per foot and greater apply the felt parallel to the eaves lapping each course of the felt over the lower course at least 2 in. Where ends join, lap the felt 4 in. If left exposed, the underlayment felt may be adversely affected by moisture and weathering. Laying of the underlayment and the shingle application must be done together.

Products which are acceptable for use as underlayment are:

- TAMKO No. 15 Asphalt Saturated Organic Felt
- A non-perforated asphalt saturated organic felt which meets ASTM: D226, Type I or ASTM D4869, Type I
- Any TAMKO non-perforated asphalt saturated organic felt
- TAMKO TW Metal and Tile Underlayment, TW Underlayment and Moisture Guard Plus® (additional ventilation maybe required. Contact TAMKO's technical services department for more information)

In areas where ice builds up along the eaves or a back-up of water from frozen or clogged gutters is a potential problem, TAMKO's Moisture Guard Plus® waterproofing underlayment (or any specialty eaves flashing product) may be applied to eaves, rakes, ridges, valleys, around chimneys, skylights or dormers to help prevent water damage. Contact TAMKO's Technical Services Department for more information.
TAMKO does not recommend the use of any substitute products as shingle underlayment.

5. APPLICATION INSTRUCTIONS

STARTER COURSE: Two starter course layers must be applied prior to application of Heritage Vintage AR Shingles.
The first starter course may consist of TAMKO Shingle Starter, three tab self-sealing type shingles or a 9 inch wide strip of mineral surface roll roofing. If three tab self-sealing shingles are used, remove the exposed tab portion and install with the factory applied adhesive adjacent to the eaves. If using three tab self-sealing shingles or shingle starter, remove 18 in. from first shingle to offset the end joints of the Vintage Starter. Attach the first starter course with approved fasteners along a line parallel to and 3 in. to 4 in. above the eave edge. The starter course should overhang both the eave and rake edge 1/4 in. to 3/8 in. Over the first starter course, install Heritage Vintage Starter AR and begin at the left rake edge with a full size shingle and continue across the roof nailing the Heritage Vintage Starter AR along a line parallel to and 6 in. from the eave edge.

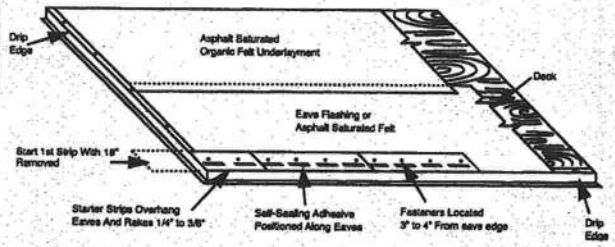

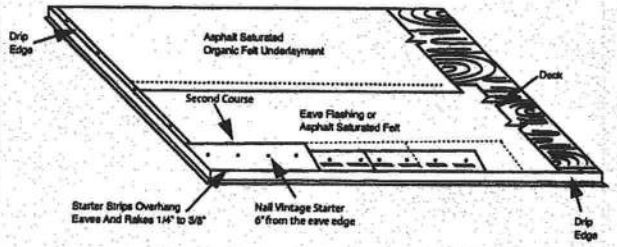

Note: Do not allow Vintage Starter AR joints to be visible between shingle tabs. Cutting of the starter may be required.

HERITAGE VINTAGE STARTER AR
12 1/2" x 36" 20 PIECES PER BUNDLE
60 LINEAL FT. PER BUNDLE

(Continued)

TAMKO BUILDING PRODUCTS

(CONTINUED from Pg. 2)

• HERITAGE® VINTAGE™ AR – Phillipsburg, KS
LAMINATED ASPHALT SHINGLES

SHINGLE APPLICATION: Start the first course at the left rake edge with a full size shingle and overhang the rake edge 1/4 in. to 3/8 in.. To begin the second course, align the right side of the shingle with the 5-1/2 in. alignment notch on the first course shingle making sure to align the exposure notch. (See shingle illustration on next page) Cut the appropriate amount from the rake edge so the overhang is 1/4" to 3/8". For the third course, align the shingle with the 15-1/2 in. alignment notch at the top of the second course shingle, again being sure to align the exposure notch. Cut the appropriate amount from the rake edge. To begin the fourth course, align the shingle with the 5-1/2 in. alignment notch from the third course shingle while aligning the exposure notch. Cut the appropriate amount from the rake edge. Continue up the rake in as many rows as necessary using the same formula as outlined above. Cut pieces may be used to complete courses at the right side. As you work across the roof, install full size shingles taking care to align the exposure notches. Shingle joints should be no closer than 4 in.

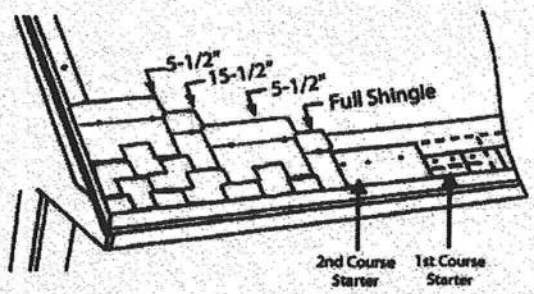

6. LOW SLOPE APPLICATION

On pitches 2 in. per foot to 4 in. per foot cover the deck with two layers of underlayment. Begin by applying the underlayment in a 19 in. wide strip along the eaves and overhanging the drip edge by 1/4 to 3/4 in. Place a full 36 in. wide sheet over the 19 in. wide starter piece, completely overlapping it. All succeeding courses will be positioned to overlap the preceding course by 19 in. If winter temperatures average 25°F or less, thoroughly cement the laps of the entire underlayment to each other with plastic cement from eaves and rakes to a point of a least 24 in. inside the interior wall line of the building. As an alternative, TAMKO's Moisture Guard Plus self-adhering waterproofing underlayment may be used in lieu of the cemented felts.

7. VALLEY APPLICATION

TAMKO recommends an open valley construction with Heritage Vintage AR shingles.

To begin, center a sheet of TAMKO Moisture Guard Plus, TW Underlayment or TW Metal & Tile Underlayment in the valley.

After the underlayment has been secured, install the recommended corrosion resistant metal (26 gauge galvanized metal or an equivalent) in the valley. Secure the valley metal to the roof deck. Overlaps should be 12" and cemented.

Following valley metal application; a 9" to 12" wide strip of TAMKO Moisture Guard Plus, TW Underlayment or TW Metal & Tile Underlayment should be applied along the edges of the metal valley flashing (max. 6" onto metal valley flashing) and on top of the valley underlayment. The valley will be completed with shingle application.

SHINGLE APPLICATION INSTRUCTIONS (OPEN VALLEY)

- Snap two chalk lines, one on each side of the valley centerline over the full length of the valley flashing. Locate the upper ends of the chalk lines 3" to either side of the valley centerline.
- The lower end should diverge from each other by 1/8" per foot. Thus, for an 8' long valley, the chalk lines should be 7" either side of the centerline at the eaves and for a 16' valley 8".

As shingles are applied toward the valley, trim the last shingle in each course to fit on the chalk line. Never use a shingle trimmed to less than 12" in length to finish a course running into a valley. If necessary, trim the adjacent shingle in the course to allow a longer portion to be used.

- Clip 1" from the upper corner of each shingle on a 45° angle to direct water into the valley and prevent it from penetrating between the courses.

- Form a tight seal by cementing the shingle to the valley lining with a 3" width of asphalt plastic cement (conforming to ASTM D 4586).

VINTAGE Open Valley Detail

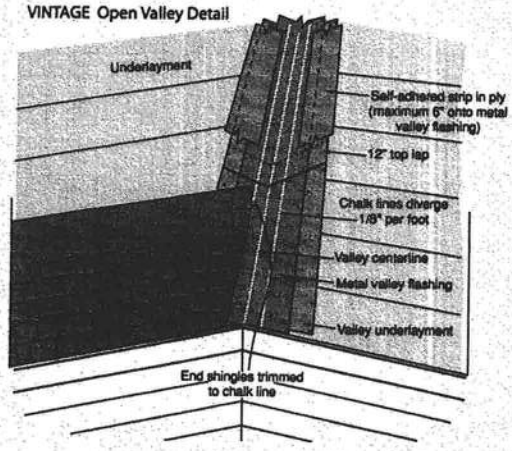

• CAUTION:
Adhesive must be applied in smooth, thin, even layers.

Excessive use of adhesive will cause blistering to this product.

TAMKO assumes no responsibility for blistering.

(Continued)

TAMKO BUILDING PRODUCTS

(CONTINUED from Pg. 3)

• HERITAGE® VINTAGE™ AR – Phillipsburg, KS
LAMINATED ASPHALT SHINGLES

8. HIP AND RIDGE FASTENING DETAIL

Apply the shingles with a 5 in. exposure beginning at the bottom of the hip or from the end of the ridge opposite the direction of the prevailing winds. Secure each shingle with one fastener on each side, 5-1/2 in. back from the exposed end and 1 in. up from the edge. TAMKO recommends the use of TAMKO Heritage Vintage Hip & Ridge shingle products.

Fasteners should be 1/4 in. longer than the ones used for shingles.

IMPORTANT: PRIOR TO INSTALLATION, CARE NEEDS TO BE TAKEN TO PREVENT DAMAGE WHICH CAN OCCUR WHILE BENDING SHINGLE IN COLD WEATHER.

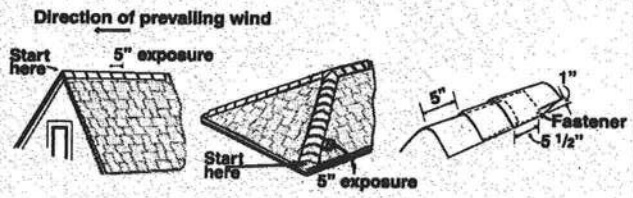

THESE ARE THE MANUFACTURER'S APPLICATION INSTRUCTIONS FOR THE ROOFING CONDITIONS DESCRIBED. TAMKO BUILDING PRODUCTS, INC. ASSUMES NO RESPONSIBILITY FOR LEAKS OR OTHER ROOFING DEFECTS RESULTING FROM FAILURE TO FOLLOW THE MANUFACTURER'S INSTRUCTIONS.

Residential System Sizing Calculation

Summary

De osett Resi ence

La e City, FL 3 2025-

Project Title:
Adam's Framing & Construction - Derrosett

Code Only
Professional Version
Climate: North

3/14/2007

L ation for w eather data: Gainesville - Defaults: Latitude(29) Altitude(152 ft.) Temp Range(M)					
H midity data Interior RH (50%) Outdoor wet bulb (77F) Humidity difference(54gr.)					
W nter design temperature	33	F	Summer design temperature	92	F
W nter setpoi t	70	F	Summer setpoint	75	F
W nter tempe ature difference	37	F	Summer temperature difference	17	F
T tal heating load calculation	**30943**	**Btuh**	**Total cooling load calculation**	**34825**	**Btuh**
S omitted hea ting capacity	% of calc	Btuh	Submitted cooling capacity	% of calc	Btuh
T tal (Electric Heat Pump)	119.6	37000	Sensible (SHR = 0.75)	100.3	27750
H at Pump + Auxiliary(0.0kW)	119.6	37000	Latent	129.0	9250
			Total (Electric Heat Pump)	106.2	37000

WINTER CALCULATIONS

V nter Heating Load (for 1531 sqft)

L ad compone nt			Load	
V ndow total	191	sqft	8975	Btuh
V all total	1411	sqft	4634	Btuh
D or total	38	sqft	492	Btuh
C iling total	1600	sqft	1885	Btuh
F or total	210	sqft	9169	Btuh
I iltration	143	cfm	5788	Btuh
D ct loss			0	Btuh
S btotal			**30943**	**Btuh**
V ntilation	0	cfm	0	Btuh
T TAL HEAT LOSS			**30943**	**Btuh**

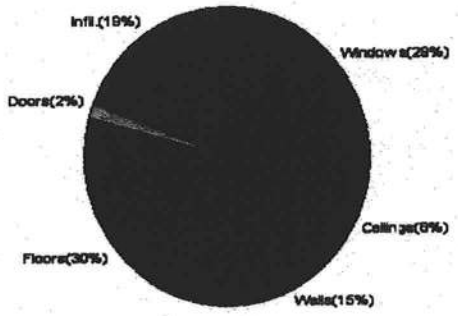

SUMMER CALCULATIONS

S mmer Cooli g Load (for 1531 sqft)

L ad compone nt			Load	
V indow total	191	sqft	15000	Btuh
V all total	1411	sqft	2815	Btuh
D or total	38	sqft	372	Btuh
C iling total	1600	sqft	2650	Btuh
F or total			0	Btuh
I iltration	163	cfm	3039	Btuh
I ernal gain			3780	Btuh
D uct gain			0	Btuh
S ns. Ventilat on	0	cfm	0	Btuh
T tal sensibl gain			**27657**	**Btuh**
L tent gain(du cts)			0	Btuh
L tent gain(int ltration)			5968	Btuh
L tent gain(ve ntilation)			0	Btuh
L tent gain(int ernal/occupants/other)			1200	Btuh
T tal latent g ain			**7168**	**Btuh**
T TAL HEAT GAIN			**34825**	**Btuh**

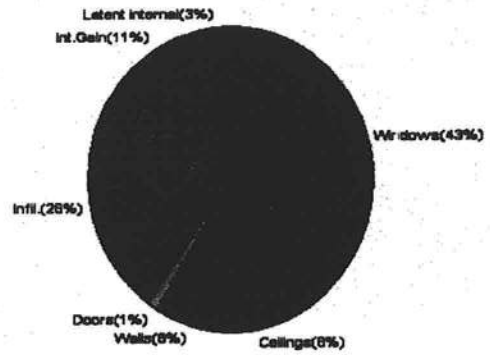

For Florida residences only

EnergyGauge® System Sizing
PREPARED BY: _____
DATE: 3-14-07

System Sizing Calculations - Winter

Residential Load - Whole House Component Details

Der osett Resid ence

Lak City, FL 3: 025-

Project Title:
Adam's Framing & Construction - Derrosett

Code Only
Professional Version
Climate: North

Ref rence City: Gainesville (Defaults) Winter Temperature Difference: 37.0 F

3/14/2007

Window	Panes/SHGC/Frame/U	Orientation	Area(sqft) X	HTM=	Load
1	1, Clear, Metal, 1.27	W	6.0	47.0	282 Btuh
2	1, Clear, Metal, 1.27	N	16.0	47.0	752 Btuh
3	1, Clear, Metal, 1.27	W	9.0	47.0	423 Btuh
4	1, Clear, Metal, 1.27	W	40.0	47.0	1880 Btuh
5	1, Clear, Metal, 1.27	W	30.0	47.0	1410 Btuh
6	1, Clear, Metal, 1.27	E	60.0	47.0	2819 Btuh
7	1, Clear, Metal, 1.27	S	30.0	47.0	1410 Btuh
	Window Total		191(sqft)		8975 Btuh
Walls	Type	R-Value	Area X	HTM=	Load
1	Frame - Wood - Ext(0.09)	13.0	1189	3.3	3905 Btuh
2	Frame - Wood - Adj(0.09)	13.0	222	3.3	729 Btuh
	Wall Total		1411		4634 Btuh
Doors	Type		Area X	HTM=	Load
1	Insulated - Adjacent		18	12.9	233 Btuh
2	Insulated - Exterior		20	12.9	259 Btuh
	Door Total		38		492Btuh
Ceilings	Type/Color/Surface	R-Value	Area X	HTM=	Load
1	Vented Attic/D/Shin)	30.0	1600	1.2	1885 Btuh
	Ceiling Total		1600		1885Btuh
Floors	Type	R-Value	Size X	HTM=	Load
1	Slab On Grade	0	210.0 ft(p)	43.7	9169 Btuh
	Floor Total		210		9169 Btuh
			Zone Envelope Subtotal:		25155 Btuh
nfiltration	Type	ACH X	Zone Volume	CFM=	
	Natural	0.70	12248	142.9	5788 Btuh
Ductload	Proposed leak free, R6.0, Supply(Attic), Return(Attic)			(DLM of 0.00)	0 Btuh
:one #1			**Sensible Zone Subtotal**		**30943 Btuh**

Subtotal Sensible	30943 Btuh
Ventilation Sensible	0 Btuh
Total Btuh Loss	30943 Btuh

Manual J Winter Calculations

Residential Load - Component Details (continued)

De osett Resi ence

La e City, FL 3 2025-

Project Title:
Adam's Framing & Construction - Derrosett

Code Only
Professional Version
Climate: North

Ke Window t pes (SHGC - Shading coefficient of glass as SHGC numerical value or as clear
(Frame types - metal, wood or insulated metal)
(U - Window U-Factor or 'DEF' for default)
(HTM - ManualJ Heat Transfer Multiplier)

Ke : Floor size (perimeter(p) for slab-on-grade or area for all other floor types)

For Florida residences only

System Sizing Calculations - Winter

Residential Load - Room by Room Component Details

De ·osett Resi(ence

La e City, FL 3 2025-

Re erence City Gainesville (Defaults) Winter Temperature Difference: 37.0 F

Project Title:
Adam's Framing & Construction - Derrosett

Code Only
Professional Version
Climate: North

3/14/2007

Window	Panes/SHGC/Frame/U	Orientation	Area(sqft) X	HTM=	Load
1	1, Clear, Metal, 1.27	W	6.0	47.0	282 Btuh
2	1, Clear, Metal, 1.27	N	16.0	47.0	752 Btuh
3	1, Clear, Metal, 1.27	W	9.0	47.0	423 Btuh
4	1, Clear, Metal, 1.27	W	40.0	47.0	1880 Btuh
5	1, Clear, Metal, 1.27	W	30.0	47.0	1410 Btuh
6	1, Clear, Metal, 1.27	E	60.0	47.0	2819 Btuh
7	1, Clear, Metal, 1.27	S	30.0	47.0	1410 Btuh
	Window Total		191(sqft)		8975 Btuh
Walls	Type	R-Value	Area X	HTM=	Load
1	Frame - Wood - Ext(0.09)	13.0	1189	3.3	3905 Btuh
2	Frame - Wood - Adj(0.09)	13.0	222	3.3	729 Btuh
	Wall Total		1411		4634 Btuh
Doors	Type		Area X	HTM=	Load
1	Insulated - Adjacent		18	12.9	233 Btuh
2	Insulated - Exterior		20	12.9	259 Btuh
	Door Total		38		492Btuh
Ceilings	Type/Color/Surface	R-Value	Area X	HTM=	Load
1	Vented Attic/D/Shin)	30.0	1600	1.2	1885 Btuh
	Ceiling Total		1600		1885Btuh
Floors	Type	R-Value	Size X	HTM=	Load
1	Slab On Grade	0	210.0 ft(p)	43.7	9169 Btuh
	Floor Total		210		9169 Btuh
			Zone Envelope Subtotal:		25155 Btuh
nfiltration	Type	ACH X	Zone Volume	CFM=	
	Natural	0.70	12248	142.9	5788 Btuh
Ductload	Proposed leak free, R6.0, Supply(Attic), Return(Attic)			(DLM of 0.00)	0 Btuh
:one #1			**Sensible Zone Subtotal**		**30943 Btuh**

Subtotal Sensible	30943 Btuh
Ventilation Sensible	0 Btuh
Total Btuh Loss	30943 Btuh

Manual J Winter Calculations

Residential Load - Component Details (continued)

De osett Resi ence

La a City, FL 3 2025-

Project Title:
Adam's Framing & Construction - Derrosett

Code Only
Professional Version
Climate: North

Ke : Window t pes (SHGC - Shading coefficient of glass as SHGC numerical value or as clear
(Frame types - metal, wood or insulated metal)
(U - Window U-Factor or 'DEF' for default)
(HTM - ManualJ Heat Transfer Multiplier)

Ke : Floor size (perimeter(p) for slab-on-grade or area for all other floor types)

For Florida residences only

System Sizing Calculations - Summer

Residential Load - Whole House Component Details

D rosett Resi dence | Project Title: Adam's Framing & Construction - Derrosett | Code Only Professional Version

La e City, FL : 2025- | Climate: North

R erence Cit : Gainesville (Defaults) | Summer Temperature Difference: 17.0 F | 3/14/2007

[redacted]

Window	Type* P /SHGC/U/InSh/ExSh/IS	Ornt	Overhang Len	Hgt	Window Area(sqft) Gross	Shaded	Unshaded	HTM Shaded	Unshaded	Load
1	1 Clear, 1.27, None,N,N	W	1.5ft	8ft.	6.0	0.0	6.0	37	94	564 Btuh
2	1 Clear, 1.27, None,N,N	N	1.5ft	8ft.	16.0	0.0	16.0	37	37	599 Btuh
3	1 Clear, 1.27, None,N,N	W	1.5ft	8ft.	9.0	0.0	9.0	37	94	846 Btuh
4	1 Clear, 1.27, None,N,N	W	11.5f	8ft.	40.0	40.0	0.0	37	94	1498 Btuh
5	1 Clear, 1.27, None,N,N	W	1.5ft	8ft.	30.0	0.0	30.0	37	94	2821 Btuh
6	1 Clear, 1.27, None,N,N	E	1.5ft	8ft.	60.0	0.0	60.0	37	94	5643 Btuh
7	1 Clear, 1.27, None,N,N	S	1.5ft	8ft.	30.0	30.0	0.0	37	43	1124 Btuh
	E cursion									1904 Btuh
	V /indow Total				191 (sqft)					15000 Btuh

Walls	Type	R-Value/U-Value	Area(sqft)	HTM	Load
1	F ame - Wood - Ext	13.0/0.09	1189.0	2.1	2480 Btuh
2	F ame - Wood - Adj	13.0/0.09	222.0	1.5	335 Btuh
	V /all Total		1411 (sqft)		2815 Btuh

Doors	Type	Area (sqft)	HTM	Load
1	Ir sulated - Adjacent	18.0	9.8	176 Btuh
2	Ir sulated - Exterior	20.0	9.8	196 Btuh
	D oor Total	38 (sqft)		372 Btuh

Ceilings	Type/Color/Surface	R-Value	Area(sqft)	HTM	Load
1	V ented Attic/DarkShingle	30.0	1600.0	1.7	2650 Btuh
	C eiling Total		1600 (sqft)		2650 Btuh

Floors	Type	R-Value	Size	HTM	Load
1	S ab On Grade	0.0	210 (ft(p))	0.0	0 Btuh
	F oor Total		210.0 (sqft)		0 Btuh

			Zone Envelope Subtotal:		20837 Btuh
Infiltration	Type	ACH	Volume(cuft)	CFM=	Load
	S ensibleNatural	0.80	12248	163.3	3039 Btuh
Internal gain		Occupants 6	Btuh/occupant X 230 +	Appliance 2400	Load 3780 Btuh
Duct load	P roposed leak free, R6.0, Supply(Attic), Return(Attic)			DGM = 0.00	0.0 Btuh
				Sensible Zone Load	**27657 Btuh**

Manual J Summer Calculations

Residential Load - Component Details (continued)

D rosett Res dence
La e City, FL 2025-

Project Title:
Adam's Framing & Construction - Derrosett

Code Only
Professional Version
Climate: North

3/14/2007

[redacted]

	Sensible Envelope Load All Zones	**27657**	**Btuh**
	Sensible Duct Load	0	Btuh
	Total Sensible Zone Loads	**27657**	**Btuh**
	Sensible ventilation	0	Btuh
	Blower	0	Btuh
Whole House	**Total sensible gain**	**27657**	**Btuh**
Totals for Cooling	Latent infiltration gain (for 54 gr. humidity difference)	5968	Btuh
	Latent ventilation gain	0	Btuh
	Latent duct gain	0	Btuh
	Latent occupant gain (6 people @ 200 Btuh per person)	1200	Btuh
	Latent other gain	0	Btuh
	Latent total gain	**7168**	**Btuh**
	TOTAL GAIN	**34825**	**Btuh**

*Key: Window types (Pn - Number of panes of glass)
(SHGC - Shading coefficient of glass as SHGC numerical value or as clear or tint)
(U - Window U-Factor or 'DEF' for default)
(InSh - Interior shading device: none(N), Blinds(B), Draperies(D) or Roller Shades(R))
(ExSh - Exterior shading device: none(N) or numerical value)
(BS - Insect screen: none(N), Full(F) or Half(H))
(Ornt - compass orientation)

For Florida residences only

System Sizing Calculations - Summer

Residential Load - Room by Room Component Details

D rosett Resi lence

Project Title:
Adam's Framing & Construction - Derrosett

Code Only
Professional Version
Climate: North

L e City, FL : 2025-

R erence Cit : Gainesville (Defaults) Summer Temperature Difference: 17.0 F

3/14/2007

[redacted]

Window	Type* P /SHGC/U/InSh/ExSh/IS	Ornt	Overhang Len	Overhang Hgt	Window Area(sqft) Gross	Shaded	Unshaded	HTM Shaded	HTM Unshaded	Load
1	1 Clear, 1.27, None,N,N	W	1.5ft	8ft.	6.0	0.0	6.0	37	94	564 Btuh
2	1 Clear, 1.27, None,N,N	N	1.5ft	8ft.	16.0	0.0	16.0	37	37	599 Btuh
3	1 Clear, 1.27, None,N,N	W	1.5ft	8ft.	9.0	0.0	9.0	37	94	846 Btuh
4	1 Clear, 1.27, None,N,N	W	11.5f	8ft.	40.0	40.0	0.0	37	94	1498 Btuh
5	1 Clear, 1.27, None,N,N	W	1.5ft	8ft.	30.0	0.0	30.0	37	94	2821 Btuh
6	1 Clear, 1.27, None,N,N	E	1.5ft	8ft.	60.0	0.0	60.0	37	94	5643 Btuh
7	1 Clear, 1.27, None,N,N	S	1.5ft	8ft.	30.0	30.0	0.0	37	43	1124 Btuh
	E cursion									1904 Btuh
	V /indow Total				191 (sqft)					15000 Btuh

Walls	Type	R-Value/U-Value	Area(sqft)	HTM	Load
1	F ame - Wood - Ext	13.0/0.09	1189.0	2.1	2480 Btuh
2	F ame - Wood - Adj	13.0/0.09	222.0	1.5	335 Btuh
	V /all Total		1411 (sqft)		2815 Btuh

Doors	Type	Area (sqft)	HTM	Load
1	I sulated - Adjacent	18.0	9.8	176 Btuh
2	I sulated - Exterior	20.0	9.8	196 Btuh
	D oor Total	38 (sqft)		372 Btuh

Ceilings	Type/Color/Surface	R-Value	Area(sqft)	HTM	Load
1	V ented Attic/DarkShingle	30.0	1600.0	1.7	2650 Btuh
	C eiling Total		1600 (sqft)		2650 Btuh

Floors	Type	R-Value	Size	HTM	Load
1	S lab On Grade	0.0	210 (ft(p))	0.0	0 Btuh
	F loor Total		210.0 (sqft)		0 Btuh

			Zone Envelope Subtotal:		20837 Btuh

I filtration	Type	ACH	Volume(cuft)	CFM=	Load
	S ensibleNatural	0.80	12248	163.3	3039 Btuh
nternal gain		Occupants	Btuh/occupant	Appliance	Load
		6	X 230 +	2400	3780 Btuh
I uct load	P roposed leak free, R6.0, Supply(Attic), Return(Attic)			DGM = 0.00	0.0 Btuh
				Sensible Zone Load	**27657 Btuh**

Manual J Summer Calculations

Residential Load - Component Details (continued)

D rosett Resi dence
La e City, FL : 2025-

Project Title:
Adam's Framing & Construction - Derrosett

Code Only
Professional Version
Climate: North

3/14/2007

	Sensible Envelope Load All Zones	**27657 Btuh**
	Sensible Duct Load	0 Btuh
	Total Sensible Zone Loads	**27657 Btuh**
	Sensible ventilation	0 Btuh
	Blower	0 Btuh
Wh le House	**Total sensible gain**	**27657 Btuh**
Totals for Cooling	Latent infiltration gain (for 54 gr. humidity difference)	5968 Btuh
	Latent ventilation gain	0 Btuh
	Latent duct gain	0 Btuh
	Latent occupant gain (6 people @ 200 Btuh per person)	1200 Btuh
	Latent other gain	0 Btuh
	Latent total gain	**7168 Btuh**
	TOTAL GAIN	**34825 Btuh**

*K y: Window ty es (Pn - Number of panes of glass)
(SHGC - Shading coefficient of glass as SHGC numerical value or as clear or tint)
(U - Window U-Factor or 'DEF' for default)
(InSh - Interior shading device: none(N), Blinds(B), Draperies(D) or Roller Shades(R))
(ExSh - Exterior shading device: none(N) or numerical value)
(BS - Insect screen: none(N), Full(F) or Half(H))
(Ornt - compass orientation)

For Florida residences only

Residential Window Diversity

MidSummer

De rosett Resi lence

La e City, FL 3 2025-

Project Title:
Adam's Framing & Construction - Derrosett

Code Only
Professional Version
Climate: North

3/14/2007

Summe design temperature	92	F	Average window load for July	11446 Btu
Summe setpoint	75	F	Peak window load for July	16784 Btu
Summe temperature difference	17	F	Excusion limit(130% of Ave.)	14880 Btu
Latitude	29	North	Window excursion (July)	1904 Btuh

WINDOW Average and Peak Loads

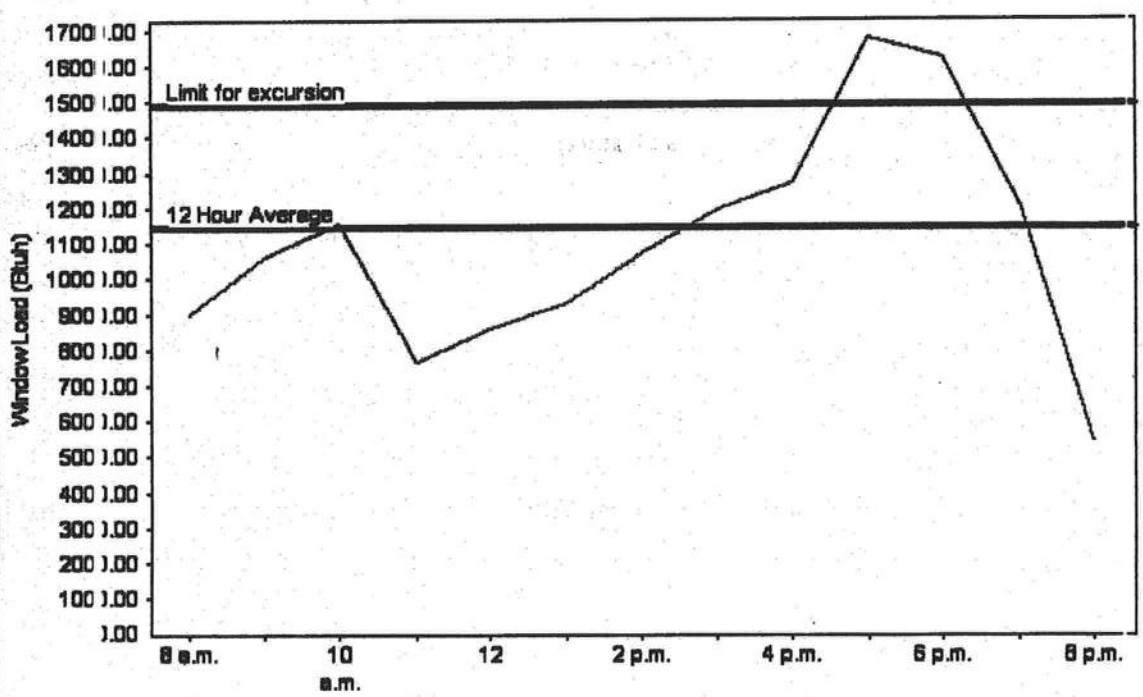

Total July Window Load(Radiation and conduction)

Warning: This application has glass areas that produce relatively large heat gains for part of the day. Variable air volum e devices may be required to overcome spikes in solar gain for one or more rooms. A zoned system may be r quired or some rooms may require zone control.

EnergyGauge® System Sizing for Florida residences only
PREPARED BY: _____
DATE: _____

Project Information for:	L230379		
Builder:	ADAMS FRAMING	Date:	3/13/2007
Lot: LOT 2B	~~LOT 10~~ WISE ESTATES	Start Number:	**1003**
Subdivision:	N/A	SEI Ref:	L230379
County or City:	COLUMBIA COUNTY		
Truss Page Count:	48		

Truss Design Load Information (UNO) Design Program: MiTek

Gravity		**Wind**		**Bu**
Roof (psf):	**42**	Wind Standard:	**ASCE 7-02**	
Floor (psf):	55	Wind Speed (mph):	**110**	

Note: See individual truss drawings for special loading conditions

WISE ESTATES
LOT 2B

Building Designer, responsible for Structural Engineering: (See attached)

PAPKA, ADAM R. CBC1253409
Address: P.O. BOX 1921
LAKE CITY, FL 32056 Des **138**

Truss Design Engineer: Thomas, E. Miller, P.E., 56877 - Byron K. Anderson, PE FL 60987
Company: Structural Engineering and Inspections, Inc. EB 9196
Address 16105 N. Florida Ave, Ste B, Lutz, FL 33549 Phone: 813-849-5769

Notes:

1. Truss Design Engineer is responsible for the individual trusses as components only.
2. Determination as to the suitability and use of these truss components for the structure is the responsibility of the Building Designer of Record, as defined in ANSI/TPI
3. The seal date shown on the individual truss component drawings must match the seal date on this index sheet.
4. Trusses designed for veritcal loads only, unless noted otherwise.
5. Where hangers are shown, Carried Member hanger capacity per Simpson C-2006 (SYP/Full Nailing Value) as an individual component. Building Designer shall verify the suitablity and use of Carrying Member hanger capacity.

#	Truss ID	Dwg. #	Seal Date	#	Truss ID	Dwg. #	Seal Date
1	CJ1	0313071003	3/13/2007	41	T28	0313071043	3/13/2007
2	CJ3	0313071004	3/13/2007	42	T29	0313071044	3/13/2007
3	CJ5	0313071005	3/13/2007	43	T30	0313071045	3/13/2007
4	EJ2	0313071006	3/13/2007	44	T31	0313071046	3/13/2007
5	EJ3	0313071007	3/13/2007	45	T31G	0313071047	3/13/2007
6	EJ5	0313071008	3/13/2007	46	V5	0313071048	3/13/2007
7	EJ7	0313071009	3/13/2007	47	V7	0313071049	3/13/2007
8	EJ7G	0313071010	3/13/2007	48	V9	0313071050	3/13/2007
9	HJ2	0313071011	3/13/2007				
10	HJ4	0313071012	3/13/2007				
11	HJ7	0313071013	3/13/2007				
12	HJ9	0313071014	3/13/2007				
13	PB01	0313071015	3/13/2007				
14	T01	0313071016	3/13/2007				
15	T02	0313071017	3/13/2007				
16	T03	0313071018	3/13/2007				
17	T04	0313071019	3/13/2007				
18	T05	0313071020	3/13/2007				
19	T06	0313071021	3/13/2007				
20	T07	0313071022	3/13/2007				
21	T08	0313071023	3/13/2007				
22	T09	0313071024	3/13/2007				
23	T10	0313071025	3/13/2007				
24	T11	0313071026	3/13/2007				
25	T12	0313071027	3/13/2007				
26	T13	0313071028	3/13/2007				
27	T14	0313071029	3/13/2007				
28	T15	0313071030	3/13/2007				
29	T16	0313071031	3/13/2007				
30	T17	0313071032	3/13/2007				
31	T18	0313071033	3/13/2007				
32	T19	0313071034	3/13/2007				
33	T20	0313071035	3/13/2007				
34	T21	0313071036	3/13/2007				
35	T22	0313071037	3/13/2007				
36	T23	0313071038	3/13/2007				
37	T24	0313071039	3/13/2007				
38	T25	0313071040	3/13/2007				
39	T26	0313071041	3/13/2007				
40	T27	0313071042	3/13/2007				

MAR 13 2007

LATERAL TOE-NAIL DETAIL

ST-TOENAIL

MITek Industries, Chesterfield, MO

MAR 1 3 2007

NOTES:
1. TOE-NAILS SHALL BE DRIVEN AT AN ANGLE OF 30 DEGREES WITH THE MEMBER AND STARTED 1/3 THE LENGTH OF THE NAIL FROM THE MEMBER END AS SHOWN.
2. THE END DISTANCE, EDGE DISTANCE, AND SPACING OF NAILS SHALL BE SUCH AS TO AVOID UNUSUAL SPLITTING OF THE WOOD.
3. ALLOWABLE VALUE SHALL BE THE LESSER VALUE OF THE BOTTOM CHORD SPECIES FOR MEMBERS OF DIFFERENT SPECIES.

TOE-NAIL SINGLE SHEAR VALUES PER NDS 2001 (lb/nail)

	DIAM.	SYP
3.5" LONG	.131	83.3
	.135	89.6
	.162	118.3
3.25" LONG	.128	80.5
	.131	83.3
	.148	102.1
3.0" LONG	.120	70.5
	.128	80.5
	.131	83.3
	.148	102.1

VALUES SHOWN ARE CAPACITY PER TOE-NAIL.
APPLICABLE DURATION OF LOAD INCREASES MAY BE APPLIED.

SQUARE CUT

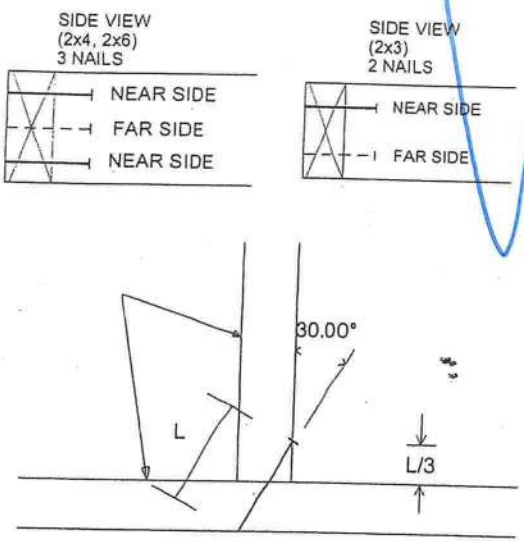

45 DEGREE ANGLE BEVEL CUT

This detail may only be applied to Pre-engineered truss drawings signed and sealed by Structural Engineering and Inspections Inc.

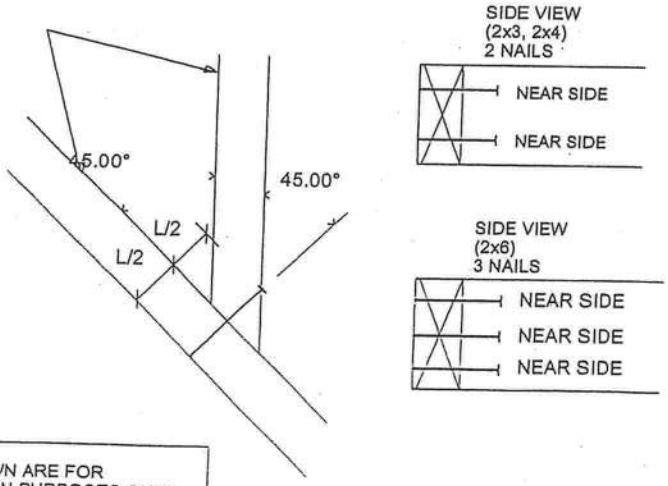

VIEWS SHOWN ARE FOR ILLUSTRATION PURPOSES ONLY

Licensee Details

Licensee Information

Name:	**PAPKA, ADAM RUSSELL (Primary Name)**
	ADAM S FRAMING AND CONSTRUCTION LLC (DBA Name)
Main Address:	**PO BOX 1921**
	LAKE CITY Florida 32056
County:	**COLUMBIA**
License Mailing:	
LicenseLocation:	

License Information

License Type:	**Certified Building Contractor**
Rank:	**Cert Building**
License Number:	**CBC1253409**
Status:	**Current,Active**
Licensure Date:	**09/26/2005**
Expires:	**08/31/2008**

Special Qualifications	**Qualification Effective**
Qualified Business License Required	**09/26/2005**

View Related License Information

View License Complaint

MARCH 13,2007 TRUSS DESIGN ENGINEER:
THOMAS E. MILLER PE 56877, BYRON K. ANDERSON PE 60987
STRUCTURAL ENGINEERING AND INSPECTIONS, INC. EB 9196
16105 N. FLORIDA AVE. STE B, LUTZ, FL 33549

Job	Truss	Truss Type	Qty	Ply	ADAMS FRAMING - LOT 10 WISE ESTATES
L230379	CJ1	JACK	14	1	Job Reference (optional)

Builders FirstSource, Lake City, Fl 32055 — 6.300 s Apr 19 2006 MiTek Industries, Inc. Mon Mar 12 11:35:10 2007 Page 1

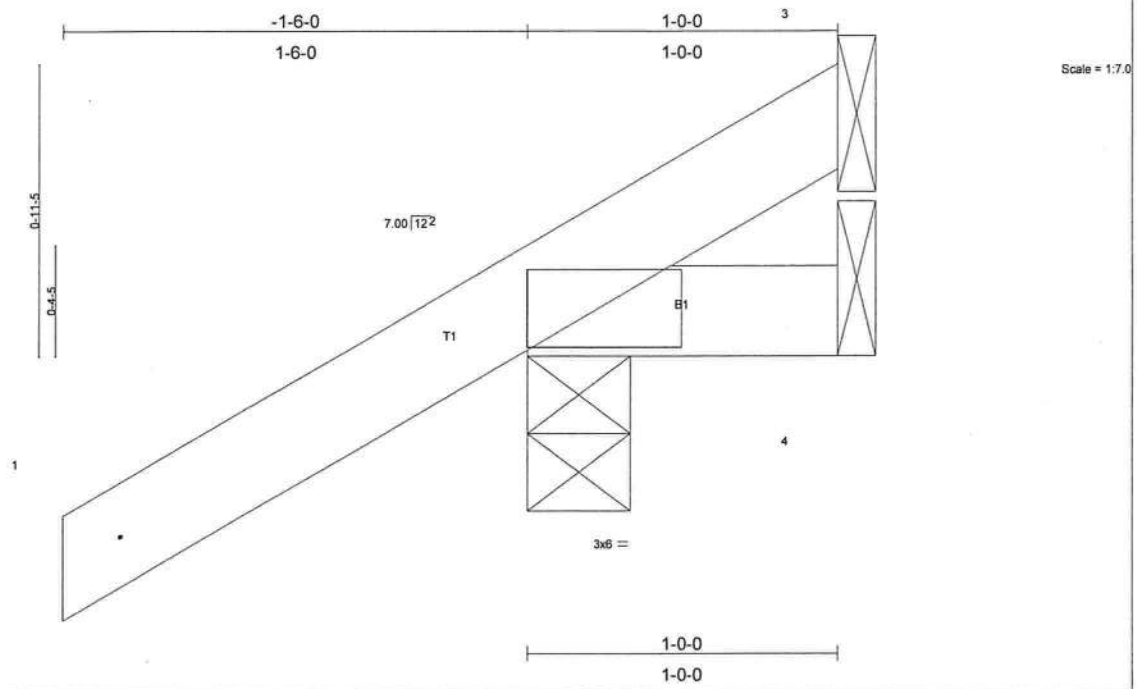

Plate Offsets (X,Y): [2:0-3-3,0-1-8]

LOADING (psf)		SPACING 2-0-0		CSI		DEFL	in	(loc)	l/defl	L/d	PLATES	GRIP
TCLL	20.0	Plates Increase	1.25	TC	0.15	Vert(LL)	-0.00	2	>999	240	MT20	244/190
TCDL	7.0	Lumber Increase	1.25	BC	0.01	Vert(TL)	-0.00	2	>999	180		
BCLL	10.0	Rep Stress Incr	YES	WB	0.00	Horz(TL)	0.00	3	n/a	n/a		
BCDL	5.0	Code FBC2004/TPI2002		(Matrix)							Weight: 6 lb	

LUMBER
TOP CHORD 2 X 4 SYP No.2
BOT CHORD 2 X 4 SYP No.2

BRACING
TOP CHORD Structural wood sheathing directly applied or 1-0-0 oc purlins.
BOT CHORD Rigid ceiling directly applied or 10-0-0 oc bracing.

REACTIONS (lb/size) 2=189/0-4-0, 4=14/Mechanical, 3=-41/Mechanical
Max Horz 2=82(load case 5)
Max Uplift2=-196(load case 5), 4=-11(load case 3), 3=-41(load case 1)
Max Grav 2=189(load case 1), 4=14(load case 1), 3=65(load case 5)

FORCES (lb) - Maximum Compression/Maximum Tension
TOP CHORD 1-2=0/39, 2-3=-50/41
BOT CHORD 2-4=0/0

JOINT STRESS INDEX
2 = 0.10

NOTES
1) Wind: ASCE 7-02; 110mph (3-second gust); h=20ft; TCDL=4.2psf; BCDL=3.0psf; Category II; Exp B; enclosed; MWFRS gable end zone and C-C Exterior(2) zone; porch left and right exposed; Lumber DOL=1.60 plate grip DOL=1.60. This truss is designed for C-C for members and forces, and for MWFRS for reactions specified.
2) All bearings are assumed to be SYP No.2 crushing capacity of 565.00 psi
3) Provide mechanical connection (by others) of truss to bearing plate capable of withstanding 196 lb uplift at joint 2, 11 lb uplift at joint 4 and 41 lb uplift at joint 3.

LOAD CASE(S) Standard

MARCH 13,2007 TRUSS DESIGN ENGINEER:
THOMAS E. MILLER PE 56877, BYRON K. ANDERSON PE 60987
STRUCTURAL ENGINEERING AND INSPECTIONS, INC. EB 9196
16105 N. FLORIDA AVE. STE B, LUTZ, FL 33549

Job	Truss	Truss Type	Qty	Ply	ADAMS FRAMING - LOT 10 WISE ESTATES
L230379	CJ3	JACK	6	1	Job Reference (optional)

Builders FirstSource, Lake City, Fl 32055 — 6.300 s Apr 19 2006 MiTek Industries, Inc. Mon Mar 12 09:57:08 2007 Page 1

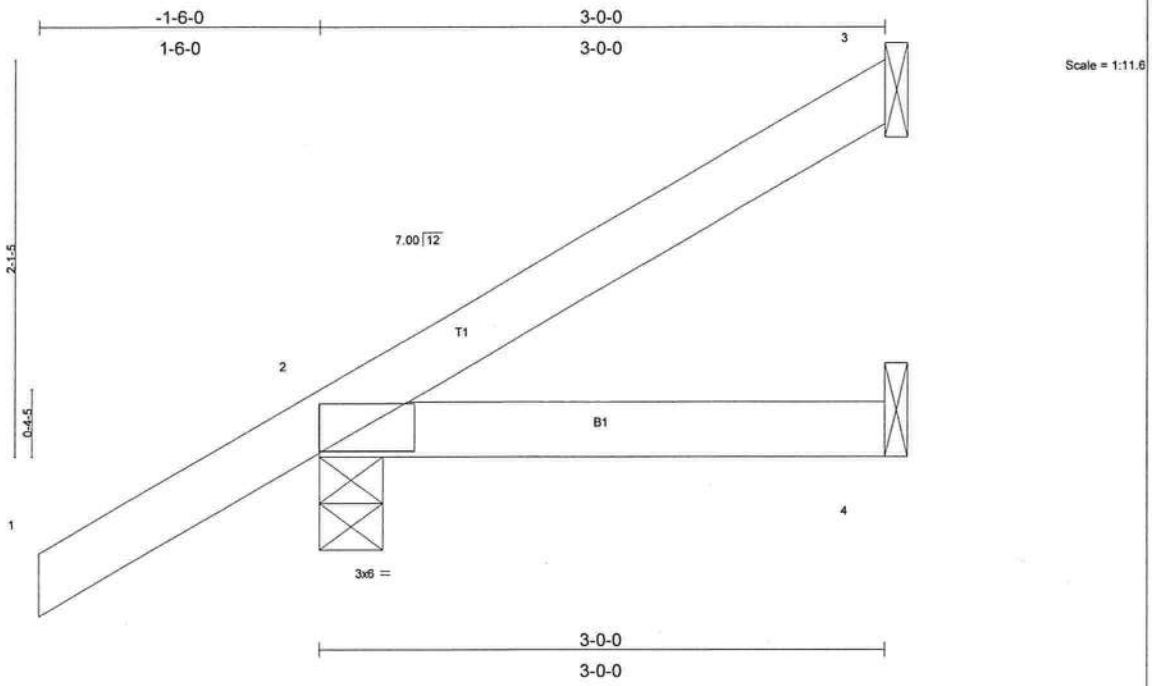

Plate Offsets (X,Y): [2:0-3-3,0-1-8]

LOADING (psf)		SPACING	2-0-0	CSI		DEFL	in	(loc)	l/defl	L/d	PLATES	GRIP
TCLL	20.0	Plates Increase	1.25	TC	0.17	Vert(LL)	-0.00	2-4	>999	240	MT20	244/190
TCDL	7.0	Lumber Increase	1.25	BC	0.05	Vert(TL)	-0.01	2-4	>999	180		
BCLL	10.0	Rep Stress Incr	YES	WB	0.00	Horz(TL)	-0.00	3	n/a	n/a		
BCDL	5.0	Code FBC2004/TPI2002		(Matrix)							Weight: 12 lb	

LUMBER
TOP CHORD 2 X 4 SYP No.2
BOT CHORD 2 X 4 SYP No.2

BRACING
TOP CHORD Structural wood sheathing directly applied or 3-0-0 oc purlins.
BOT CHORD Rigid ceiling directly applied or 10-0-0 oc bracing.

REACTIONS (lb/size) 3=48/Mechanical, 2=233/0-4-0, 4=42/Mechanical
Max Horz 2=135(load case 5)
Max Uplift3=-42(load case 5), 2=-148(load case 5)

FORCES (lb) - Maximum Compression/Maximum Tension
TOP CHORD 1-2=0/40, 2-3=-55/18
BOT CHORD 2-4=0/0

JOINT STRESS INDEX
2 = 0.10

NOTES
1) Wind: ASCE 7-02; 110mph (3-second gust); h=20ft; TCDL=4.2psf; BCDL=3.0psf; Category II; Exp B; enclosed; MWFRS gable end zone and C-C Exterior(2) zone; Lumber DOL=1.60 plate grip DOL=1.60. This truss is designed for C-C for members and forces, and for MWFRS for reactions specified.
2) All bearings are assumed to be SYP No.2 crushing capacity of 565.00 psi
3) Provide mechanical connection (by others) of truss to bearing plate capable of withstanding 42 lb uplift at joint 3 and 148 lb uplift at joint 2.

LOAD CASE(S) Standard

MARCH 13,2007 TRUSS DESIGN ENGINEER:
THOMAS E. MILLER PE 56877, BYRON K. ANDERSON PE 60987
STRUCTURAL ENGINEERING AND INSPECTIONS, INC. EB 9196
16105 N. FLORIDA AVE. STE B, LUTZ, FL 33549

Job	Truss	Truss Type	Qty	Ply	ADAMS FRAMING - LOT 10 WISE ESTATES
L230379	CJ5	JACK	2	1	Job Reference (optional)

Builders FirstSource, Lake City, Fl 32055 — 6.300 s Apr 19 2006 MiTek Industries, Inc. Mon Mar 12 09:57:35 2007 Page 1

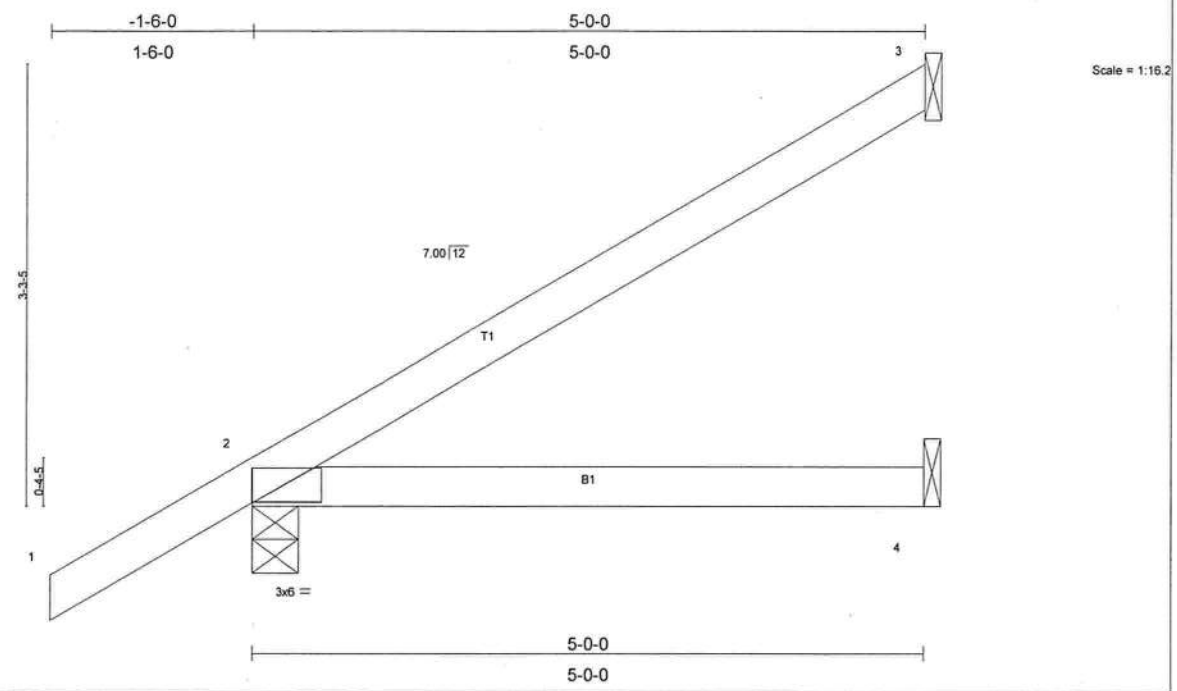

Plate Offsets (X,Y): [2:0-3-3,0-1-8]

LOADING (psf)		SPACING 2-0-0		CSI		DEFL	in	(loc)	l/defl	L/d	PLATES	GRIP
TCLL	20.0	Plates Increase	1.25	TC	0.22	Vert(LL)	-0.03	2-4	>999	240	MT20	244/190
TCDL	7.0	Lumber Increase	1.25	BC	0.16	Vert(TL)	-0.05	2-4	>999	180		
BCLL	10.0	Rep Stress Incr	YES	WB	0.00	Horz(TL)	-0.00	3	n/a	n/a		
BCDL	5.0	Code FBC2004/TPI2002		(Matrix)							Weight: 19 lb	

LUMBER
TOP CHORD 2 X 4 SYP No.2
BOT CHORD 2 X 4 SYP No.2

BRACING
TOP CHORD Structural wood sheathing directly applied or 5-0-0 oc purlins.
BOT CHORD Rigid ceiling directly applied or 10-0-0 oc bracing.

REACTIONS (lb/size) 3=113/Mechanical, 2=306/0-4-0, 4=72/Mechanical
Max Horz 2=189(load case 5)
Max Uplift3=-110(load case 5), 2=-149(load case 5)

FORCES (lb) - Maximum Compression/Maximum Tension
TOP CHORD 1-2=0/40, 2-3=-85/46
BOT CHORD 2-4=0/0

JOINT STRESS INDEX
2 = 0.12

NOTES
1) Wind: ASCE 7-02; 110mph (3-second gust); h=20ft; TCDL=4.2psf; BCDL=3.0psf; Category II; Exp B; enclosed; MWFRS gable end zone and C-C Exterior(2) zone; Lumber DOL=1.60 plate grip DOL=1.60. This truss is designed for C-C for members and forces, and for MWFRS for reactions specified.
2) All bearings are assumed to be SYP No.2 crushing capacity of 565.00 psi
3) Provide mechanical connection (by others) of truss to bearing plate capable of withstanding 110 lb uplift at joint 3 and 149 lb uplift at joint 2.

LOAD CASE(S) Standard

MARCH 13,2007 TRUSS DESIGN ENGINEER:
THOMAS E. MILLER PE 56877, BYRON K. ANDERSON PE 60987
STRUCTURAL ENGINEERING AND INSPECTIONS, INC. EB 9196
16105 N. FLORIDA AVE. STE B, LUTZ, FL 33549

Job	Truss	Truss Type	Qty	Ply	ADAMS FRAMING - LOT 10 WISE ESTATES
L230379	EJ2	JACK	10	1	Job Reference (optional)

Builders FirstSource, Lake City, Fl 32055 — 6.300 s Apr 19 2006 MiTek Industries, Inc. Mon Mar 12 11:49:51 2007 Page 1

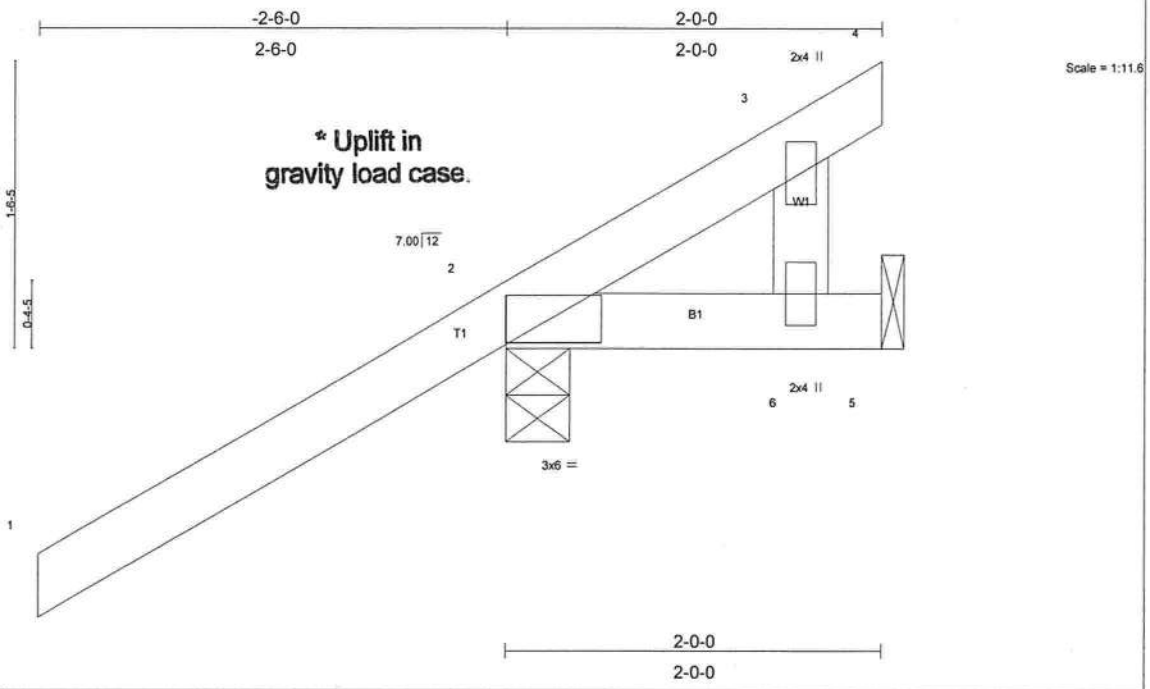

Plate Offsets (X,Y): [2:0-3-4,0-1-8]

LOADING (psf)		SPACING 2-0-0		CSI		DEFL	in	(loc)	l/defl	L/d	PLATES	GRIP
TCLL	20.0	Plates Increase	1.25	TC	0.40	Vert(LL)	0.00	2	>999	240	MT20	244/190
TCDL	7.0	Lumber Increase	1.25	BC	0.07	Vert(TL)	0.00	2	>999	180		
BCLL	10.0	Rep Stress Incr	YES	WB	0.03	Horz(TL)	0.00		n/a	n/a		
BCDL	5.0	Code FBC2004/TPI2002		(Matrix)							Weight: 12 lb	

LUMBER
TOP CHORD 2 X 4 SYP No.2
BOT CHORD 2 X 4 SYP No.2
WEBS 2 X 4 SYP No.3

BRACING
TOP CHORD Structural wood sheathing directly applied or 2-0-0 oc purlins.
BOT CHORD Rigid ceiling directly applied or 10-0-0 oc bracing.

REACTIONS (lb/size) 2=257/0-4-0, 5=-38/Mechanical
Max Horz 2=108(load case 5)
Max Uplift2=-255(load case 5), 5=-38(load case 1)
Max Grav 2=257(load case 1), 5=100(load case 5)

FORCES (lb) - Maximum Compression/Maximum Tension
TOP CHORD 1-2=0/67, 2-3=-58/73, 3-4=-12/0
BOT CHORD 2-6=0/0, 5-6=0/0
WEBS 3-6=-139/86

JOINT STRESS INDEX
2 = 0.14, 3 = 0.07 and 6 = 0.06

NOTES
1) Wind: ASCE 7-02; 110mph (3-second gust); h=20ft; TCDL=4.2psf; BCDL=3.0psf; Category II; Exp B; enclosed; MWFRS gable end zone and C-C Exterior(2) zone; Lumber DOL=1.60 plate grip DOL=1.60. This truss is designed for C-C for members and forces, and for MWFRS for reactions specified.
2) All bearings are assumed to be SYP No.2 crushing capacity of 565.00 psi
3) Provide mechanical connection (by others) of truss to bearing plate capable of withstanding 255 lb uplift at joint 2 and 38 lb uplift at joint 5.

LOAD CASE(S) Standard

MARCH 13,2007 TRUSS DESIGN ENGINEER:
THOMAS E. MILLER PE 56877, BYRON K. ANDERSON PE 60987
STRUCTURAL ENGINEERING AND INSPECTIONS, INC. EB 9196
16105 N. FLORIDA AVE. STE B, LUTZ, FL 33549

Job	Truss	Truss Type	Qty	Ply	ADAMS FRAMING - LOT 10 WISE ESTATES
L230379	EJ3	JACK	4	1	Job Reference (optional)

Builders FirstSource, Lake City, Fl 32055 — 6.300 s Apr 19 2006 MiTek Industries, Inc. Mon Mar 12 11:36:11 2007 Page 1

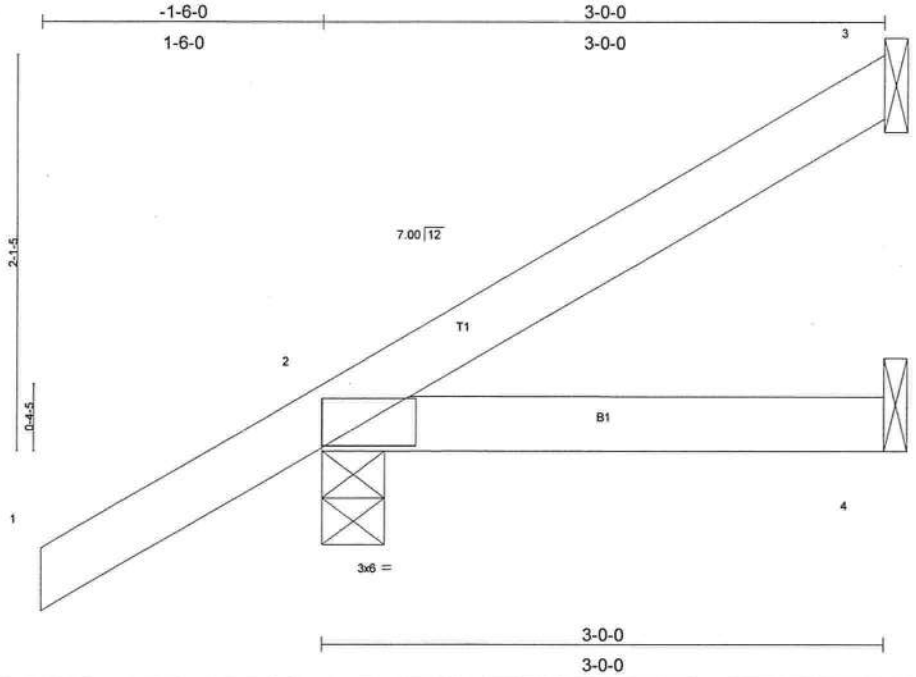

Plate Offsets (X,Y): [2:0-3-3,0-1-8]

LOADING (psf)		SPACING	2-0-0	CSI		DEFL	in	(loc)	l/defl	L/d	PLATES	GRIP
TCLL	20.0	Plates Increase	1.25	TC	0.17	Vert(LL)	0.01	2-4	>999	240	MT20	244/190
TCDL	7.0	Lumber Increase	1.25	BC	0.08	Vert(TL)	-0.01	2-4	>999	180		
BCLL	10.0	Rep Stress Incr	YES	WB	0.00	Horz(TL)	-0.00	3	n/a	n/a		
BCDL	5.0	Code FBC2004/TPI2002		(Matrix)							Weight: 12 lb	

LUMBER
TOP CHORD 2 X 4 SYP No.2
BOT CHORD 2 X 4 SYP No.2

BRACING
TOP CHORD Structural wood sheathing directly applied or 3-0-0 oc purlins.
BOT CHORD Rigid ceiling directly applied or 10-0-0 oc bracing.

REACTIONS (lb/size) 3=48/Mechanical, 2=233/0-4-0, 4=42/Mechanical
Max Horz 2=135(load case 5)
Max Uplift3=-42(load case 5), 2=-183(load case 5), 4=-33(load case 3)

FORCES (lb) - Maximum Compression/Maximum Tension
TOP CHORD 1-2=0/40, 2-3=-55/18
BOT CHORD 2-4=0/0

JOINT STRESS INDEX
2 = 0.10

NOTES
1) Wind: ASCE 7-02; 110mph (3-second gust); h=20ft; TCDL=4.2psf; BCDL=3.0psf; Category II; Exp B; enclosed; MWFRS gable end zone and C-C Exterior(2) zone; porch left and right exposed; Lumber DOL=1.60 plate grip DOL=1.60. This truss is designed for C-C for members and forces, and for MWFRS for reactions specified.
2) All bearings are assumed to be SYP No.2 crushing capacity of 565.00 psi
3) Provide mechanical connection (by others) of truss to bearing plate capable of withstanding 42 lb uplift at joint 3, 183 lb uplift at joint 2 and 33 lb uplift at joint 4.

LOAD CASE(S) Standard

MARCH 13,2007 TRUSS DESIGN ENGINEER:
THOMAS E. MILLER PE 56877, BYRON K. ANDERSON PE 60987
STRUCTURAL ENGINEERING AND INSPECTIONS, INC. EB 9196
16105 N. FLORIDA AVE. STE B, LUTZ, FL 33549

Job	Truss	Truss Type	Qty	Ply	ADAMS FRAMING - LOT 10 WISE ESTATES
L230379	EJ5	JACK	4	1	Job Reference (optional)

Builders FirstSource, Lake City, Fl 32055 — 6.300 s Apr 19 2006 MiTek Industries, Inc. Mon Mar 12 11:36:48 2007 Page 1

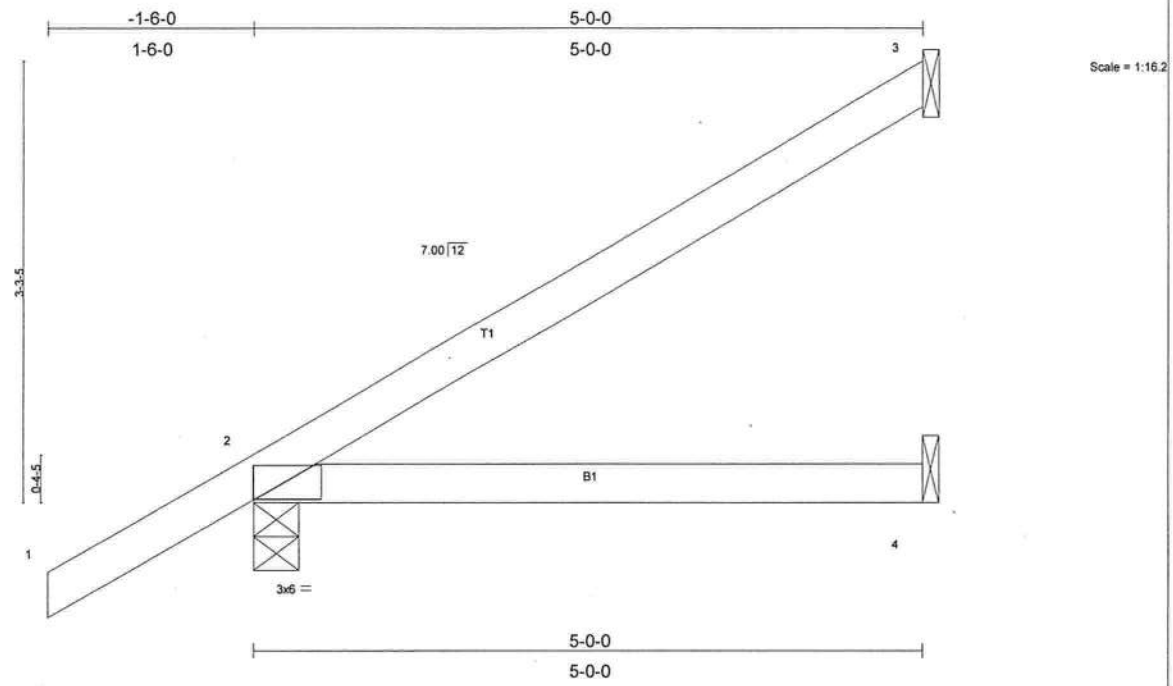

Plate Offsets (X,Y): [2:0-3-3,0-1-8]

LOADING (psf)		SPACING 2-0-0		CSI		DEFL	in	(loc)	l/defl	L/d	PLATES	GRIP
TCLL	20.0	Plates Increase	1.25	TC	0.22	Vert(LL)	-0.03	2-4	>999	240	MT20	244/190
TCDL	7.0	Lumber Increase	1.25	BC	0.16	Vert(TL)	-0.05	2-4	>999	180		
BCLL	10.0	Rep Stress Incr	YES	WB	0.00	Horz(TL)	-0.00	3	n/a	n/a		
BCDL	5.0	Code FBC2004/TPI2002		(Matrix)							Weight: 19 lb	

LUMBER
TOP CHORD 2 X 4 SYP No.2
BOT CHORD 2 X 4 SYP No.2

BRACING
TOP CHORD Structural wood sheathing directly applied or 5-0-0 oc purlins.
BOT CHORD Rigid ceiling directly applied or 10-0-0 oc bracing.

REACTIONS (lb/size) 3=113/Mechanical, 2=306/0-4-0, 4=72/Mechanical
Max Horz 2=189(load case 5)
Max Uplift3=-110(load case 5), 2=-149(load case 5)

FORCES (lb) - Maximum Compression/Maximum Tension
TOP CHORD 1-2=0/40, 2-3=-85/46
BOT CHORD 2-4=0/0

JOINT STRESS INDEX
2 = 0.12

NOTES
1) Wind: ASCE 7-02; 110mph (3-second gust); h=20ft; TCDL=4.2psf; BCDL=3.0psf; Category II; Exp B; enclosed; MWFRS gable end zone and C-C Exterior(2) zone; Lumber DOL=1.60 plate grip DOL=1.60. This truss is designed for C-C for members and forces, and for MWFRS for reactions specified.
2) All bearings are assumed to be SYP No.2 crushing capacity of 565.00 psi
3) Provide mechanical connection (by others) of truss to bearing plate capable of withstanding 110 lb uplift at joint 3 and 149 lb uplift at joint 2.

LOAD CASE(S) Standard

MARCH 13,2007 TRUSS DESIGN ENGINEER:
THOMAS E. MILLER PE 56877, BYRON K. ANDERSON PE 60987
STRUCTURAL ENGINEERING AND INSPECTIONS, INC. EB 9196
16105 N. FLORIDA AVE. STE B, LUTZ, FL 33549

Job	Truss	Truss Type	Qty	Ply	ADAMS FRAMING - LOT 10 WISE ESTATES
L230379	EJ7	MONO TRUSS	25	1	Job Reference (optional)

Builders FirstSource, Lake City, Fl 32055 — 6.300 s Apr 19 2006 MiTek Industries, Inc. Mon Mar 12 11:37:45 2007 Page 1

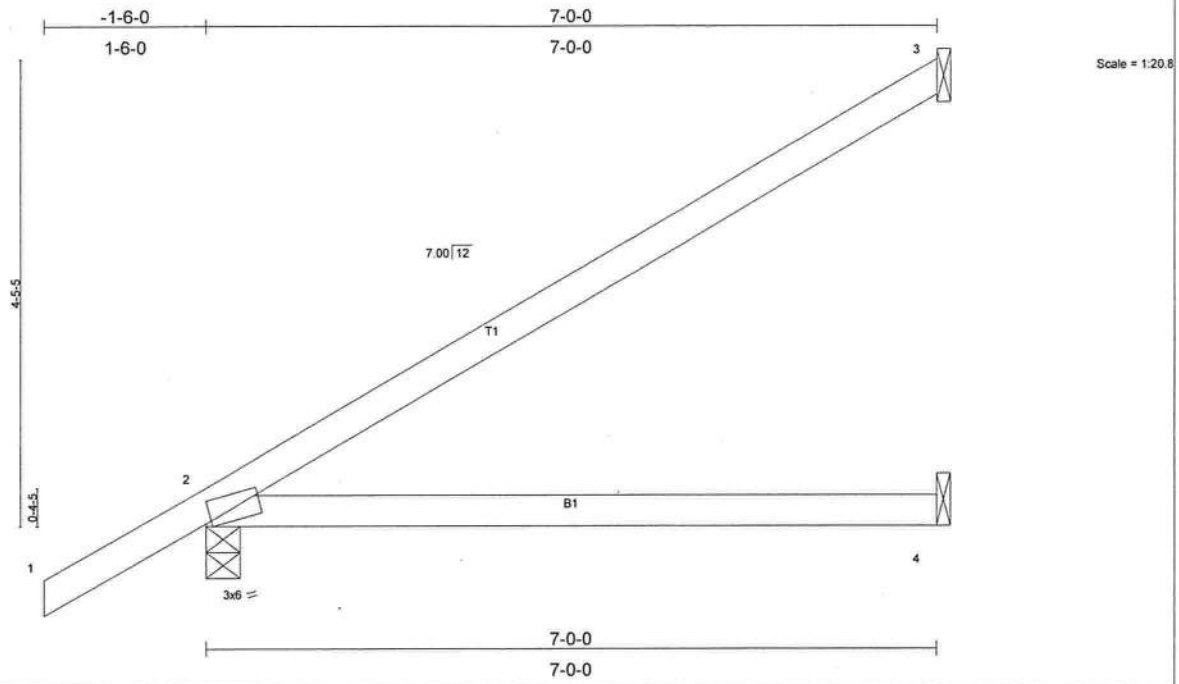

Plate Offsets (X,Y): [2:0-0-11,Edge]

LOADING (psf)		SPACING 2-0-0		CSI		DEFL	in	(loc)	l/defl	L/d	PLATES	GRIP
TCLL	20.0	Plates Increase	1.25	TC	0.46	Vert(LL)	-0.13	2-4	>607	240	MT20	244/190
TCDL	7.0	Lumber Increase	1.25	BC	0.37	Vert(TL)	-0.22	2-4	>366	180		
BCLL	10.0	Rep Stress Incr	YES	WB	0.00	Horz(TL)	-0.00	3	n/a	n/a		
BCDL	5.0	Code FBC2004/TPI2002		(Matrix)							Weight: 25 lb	

LUMBER
TOP CHORD 2 X 4 SYP No.2
BOT CHORD 2 X 4 SYP No.2

BRACING
TOP CHORD Structural wood sheathing directly applied or 6-0-0 oc purlins.
BOT CHORD Rigid ceiling directly applied or 10-0-0 oc bracing.

REACTIONS (lb/size) 3=165/Mechanical, 2=385/0-4-0, 4=109/Mechanical
Max Horz 2=242(load case 5)
Max Uplift3=-151(load case 5), 2=-159(load case 5)

FORCES (lb) - Maximum Compression/Maximum Tension
TOP CHORD 1-2=0/40, 2-3=-107/66
BOT CHORD 2-4=0/0

JOINT STRESS INDEX
2 = 0.75

NOTES
1) Wind: ASCE 7-02; 110mph (3-second gust); h=20ft; TCDL=4.2psf; BCDL=3.0psf; Category II; Exp B; enclosed; MWFRS gable end zone and C-C Interior(1) zone; Lumber DOL=1.60 plate grip DOL=1.60. This truss is designed for C-C for members and forces, and for MWFRS for reactions specified.
2) All bearings are assumed to be SYP No.2 crushing capacity of 565.00 psi
3) Provide mechanical connection (by others) of truss to bearing plate capable of withstanding 151 lb uplift at joint 3 and 159 lb uplift at joint 2.

LOAD CASE(S) Standard

MARCH 13,2007 TRUSS DESIGN ENGINEER:
THOMAS E. MILLER PE 56877, BYRON K. ANDERSON PE 60987
STRUCTURAL ENGINEERING AND INSPECTIONS, INC. EB 9196
16105 N. FLORIDA AVE. STE B, LUTZ, FL 33549

Job	Truss	Truss Type	Qty	Ply	ADAMS FRAMING - LOT 10 WISE ESTATES
L230379	EJ7G	GABLE	1	1	Job Reference (optional)

Builders FirstSource, Lake City, Fl 32055 — 6.300 s Apr 19 2006 MiTek Industries, Inc. Mon Mar 12 11:38:43 2007 Page 1

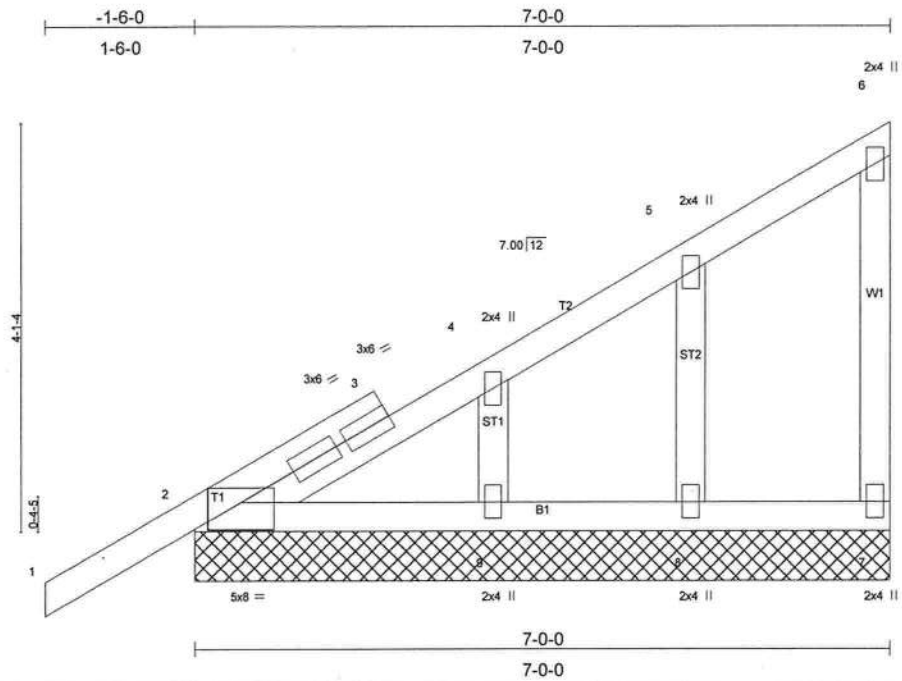

Plate Offsets (X,Y): [2:0-4-0,0-3-5]

LOADING (psf)		SPACING 2-0-0		CSI		DEFL	in	(loc)	l/defl	L/d	PLATES	GRIP
TCLL	20.0	Plates Increase	1.25	TC	0.22	Vert(LL)	-0.01	1	n/r	120	MT20	244/190
TCDL	7.0	Lumber Increase	1.25	BC	0.04	Vert(TL)	-0.01	1	n/r	90		
BCLL	10.0	Rep Stress Incr	NO	WB	0.03	Horz(TL)	0.00	7	n/a	n/a		
BCDL	5.0	Code FBC2004/TPI2002		(Matrix)							Weight: 38 lb	

LUMBER
TOP CHORD 2 X 4 SYP No.2
BOT CHORD 2 X 4 SYP No.2
WEBS 2 X 4 SYP No.3
OTHERS 2 X 4 SYP No.3

BRACING
TOP CHORD Structural wood sheathing directly applied or 6-0-0 oc purlins, except end verticals.
BOT CHORD Rigid ceiling directly applied or 10-0-0 oc bracing.

REACTIONS (lb/size) 2=322/7-0-0, 7=96/7-0-0, 8=224/7-0-0, 9=290/7-0-0
Max Horz 2=224(load case 5)
Max Uplift2=-133(load case 5), 7=-48(load case 5), 8=-126(load case 5), 9=-98(load case 5)

FORCES (lb) - Maximum Compression/Maximum Tension
TOP CHORD 1-2=-3/63, 2-3=-140/13, 3-4=-145/54, 4-5=-89/36, 5-6=-50/31, 6-7=-69/51
BOT CHORD 2-9=-3/4, 8-9=-3/4, 7-8=-3/4
WEBS 5-8=-171/138, 4-9=-211/120

JOINT STRESS INDEX
2 = 0.46, 3 = 0.00, 3 = 0.22, 3 = 0.22, 4 = 0.09, 5 = 0.08, 6 = 0.12, 7 = 0.07, 8 = 0.08 and 9 = 0.08

NOTES
1) Wind: ASCE 7-02; 110mph (3-second gust); h=20ft; TCDL=4.2psf; BCDL=3.0psf; Category II; Exp B; enclosed; MWFRS gable end zone and C-C Interior(1) zone; Lumber DOL=1.60 plate grip DOL=1.60. This truss is designed for C-C for members and forces, and for MWFRS for reactions specified.
2) Truss designed for wind loads in the plane of the truss only. For studs exposed to wind (normal to the face), see MiTek "Standard Gable End Detail"
3) Gable requires continuous bottom chord bearing.
4) Gable studs spaced at 2-0-0 oc.
5) All bearings are assumed to be SYP No.2 crushing capacity of 565.00 psi
6) Provide mechanical connection (by others) of truss to bearing plate capable of withstanding 133 lb uplift at joint 2, 48 lb uplift at joint 7, 126 lb uplift at joint 8 and 98 lb uplift at joint 9.
7) In the LOAD CASE(S) section, loads applied to the face of the truss are noted as front (F) or back (B).

LOAD CASE(S) Standard
1) Regular: Lumber Increase=1.25, Plate Increase=1.25
Uniform Loads (plf)
Vert: 1-6=-87(F=-33), 2-7=-30

MARCH 13,2007 TRUSS DESIGN ENGINEER:
THOMAS E. MILLER PE 56877, BYRON K. ANDERSON PE 60987
STRUCTURAL ENGINEERING AND INSPECTIONS, INC. EB 9196
16105 N. FLORIDA AVE. STE B, LUTZ, FL 33549

Job	Truss	Truss Type	Qty	Ply	ADAMS FRAMING - LOT 10 WISE ESTATES
L230379	HJ2	JACK	2	1	Job Reference (optional)

Builders FirstSource, Lake City, Fl 32055 — 6.300 s Apr 19 2006 MiTek Industries, Inc. Mon Mar 12 11:43:17 2007 Page 1

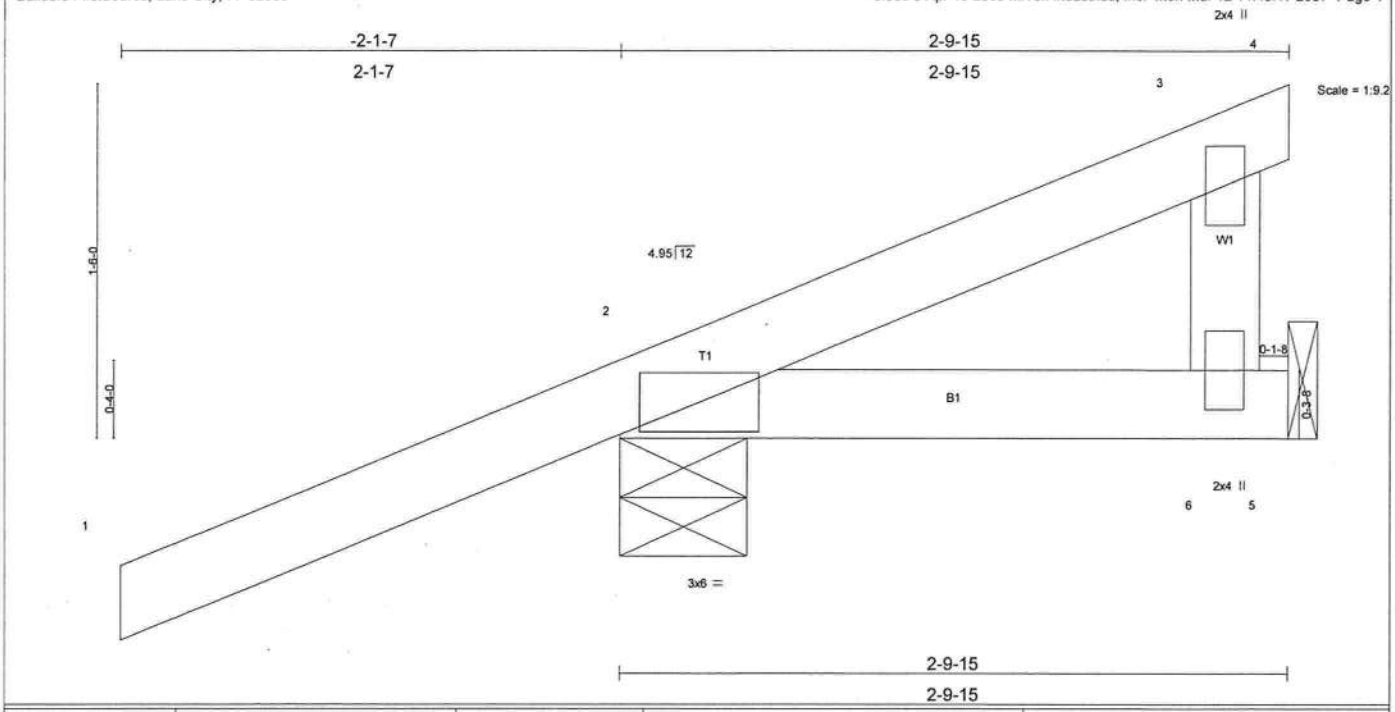

LOADING (psf)		SPACING 2-0-0		CSI		DEFL in (loc) l/defl L/d		PLATES GRIP
TCLL	20.0	Plates Increase	1.25	TC	0.33	Vert(LL) -0.00 2 >999 240		MT20 244/190
TCDL	7.0	Lumber Increase	1.25	BC	0.01	Vert(TL) -0.00 2 >999 180		
BCLL	10.0	Rep Stress Incr	NO	WB	0.01	Horz(TL) 0.00 n/a n/a		
BCDL	5.0	Code FBC2004/TPI2002		(Matrix)				Weight: 14 lb

LUMBER
TOP CHORD 2 X 4 SYP No.2
BOT CHORD 2 X 4 SYP No.2
WEBS 2 X 4 SYP No.3

BRACING
TOP CHORD Structural wood sheathing directly applied or 2-9-15 oc purlins.
BOT CHORD Rigid ceiling directly applied or 10-0-0 oc bracing.

REACTIONS (lb/size) 2=219/0-6-7, 6=-20/Mechanical
Max Horz 2=69(load case 4)
Max Uplift2=-211(load case 4), 6=-20(load case 1)
Max Grav 2=219(load case 1), 6=66(load case 6)

FORCES (lb) - Maximum Compression/Maximum Tension
TOP CHORD 1-2=0/43, 2-3=-36/26, 3-4=-1/0
BOT CHORD 2-6=0/0, 5-6=0/0
WEBS 3-6=-62/40

JOINT STRESS INDEX
2 = 0.09, 3 = 0.03 and 6 = 0.03

NOTES
1) Wind: ASCE 7-02; 110mph (3-second gust); h=20ft; TCDL=4.2psf; BCDL=3.0psf; Category II; Exp B; enclosed; MWFRS gable end zone; Lumber DOL=1.60 plate grip DOL=1.60.
2) All bearings are assumed to be SYP No.2 crushing capacity of 565.00 psi
3) Provide mechanical connection (by others) of truss to bearing plate capable of withstanding 211 lb uplift at joint 2 and 20 lb uplift at joint 6.
4) In the LOAD CASE(S) section, loads applied to the face of the truss are noted as front (F) or back (B).

LOAD CASE(S) Standard
1) Regular: Lumber Increase=1.25, Plate Increase=1.25
Uniform Loads (plf)
Vert: 1-2=-54
Trapezoidal Loads (plf)
Vert: 2=-4(F=25, B=25)-to-3=-35(F=10, B=10), 3=5(F=10, B=10)-to-4=2(F=8, B=8), 2=0(F=15, B=15)-to-5=-21(F=4, B=4)

MARCH 13,2007 TRUSS DESIGN ENGINEER:
THOMAS E. MILLER PE 56877, BYRON K. ANDERSON PE 60987
STRUCTURAL ENGINEERING AND INSPECTIONS, INC. EB 9196
16105 N. FLORIDA AVE. STE B, LUTZ, FL 33549

Job	Truss	Truss Type	Qty	Ply	ADAMS FRAMING - LOT 10 WISE ESTATES
L230379	HJ4	JACK	2	1	Job Reference (optional)

Builders FirstSource, Lake City, Fl 32055 — 6.300 s Apr 19 2006 MiTek Industries, Inc. Mon Mar 12 11:49:25 2007 Page 1

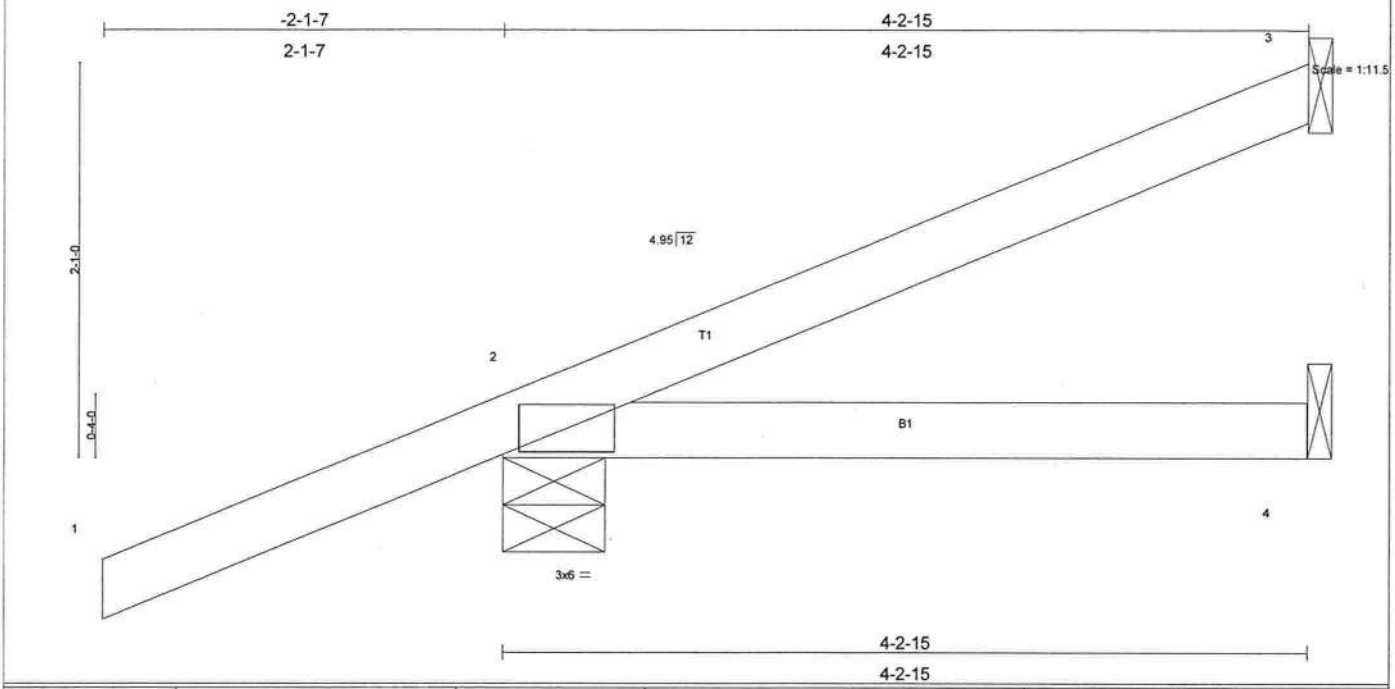

LOADING (psf)		SPACING 2-0-0		CSI		DEFL	in	(loc)	l/defl	L/d	PLATES	GRIP
TCLL	20.0	Plates Increase	1.25	TC	0.33	Vert(LL)	0.02	2-4	>999	240	MT20	244/190
TCDL	7.0	Lumber Increase	1.25	BC	0.07	Vert(TL)	-0.01	2-4	>999	180		
BCLL	10.0	Rep Stress Incr	NO	WB	0.00	Horz(TL)	-0.00	3	n/a	n/a		
BCDL	5.0	Code FBC2004/TPI2002		(Matrix)							Weight: 17 lb	

LUMBER
TOP CHORD 2 X 4 SYP No.2
BOT CHORD 2 X 4 SYP No.2

BRACING
TOP CHORD Structural wood sheathing directly applied or 4-2-15 oc purlins.
BOT CHORD Rigid ceiling directly applied or 10-0-0 oc bracing.

REACTIONS (lb/size) 3=38/Mechanical, 2=231/0-6-7, 4=42/Mechanical
Max Horz 2=94(load case 4)
Max Uplift3=-15(load case 4), 2=-234(load case 4), 4=-41(load case 2)

FORCES (lb) - Maximum Compression/Maximum Tension
TOP CHORD 1-2=0/43, 2-3=-33/7
BOT CHORD 2-4=0/0

JOINT STRESS INDEX
2 = 0.09

NOTES
1) Wind: ASCE 7-02; 110mph (3-second gust); h=20ft; TCDL=4.2psf; BCDL=3.0psf; Category II; Exp B; enclosed; MWFRS gable end zone; porch left and right exposed; Lumber DOL=1.60 plate grip DOL=1.60.
2) All bearings are assumed to be SYP No.2 crushing capacity of 565.00 psi
3) Provide mechanical connection (by others) of truss to bearing plate capable of withstanding 15 lb uplift at joint 3, 234 lb uplift at joint 2 and 41 lb uplift at joint 4.
4) In the LOAD CASE(S) section, loads applied to the face of the truss are noted as front (F) or back (B).

LOAD CASE(S) Standard
1) Regular: Lumber Increase=1.25, Plate Increase=1.25
Uniform Loads (plf)
Vert: 1-2=-54
Trapezoidal Loads (plf)
Vert: 2=-4(F=25, B=25)-to-3=-57(F=-2, B=-2), 2=0(F=15, B=15)-to-4=-32(F=-1, B=-1)

MARCH 13,2007 TRUSS DESIGN ENGINEER:
THOMAS E. MILLER PE 56877, BYRON K. ANDERSON PE 60987
STRUCTURAL ENGINEERING AND INSPECTIONS, INC. EB 9196
16105 N. FLORIDA AVE. STE B, LUTZ, FL 33549

Job	Truss	Truss Type	Qty	Ply	ADAMS FRAMING - LOT 10 WISE ESTATES
L230379	HJ7	JACK	2	1	Job Reference (optional)

Builders FirstSource, Lake City, Fl 32055 — 6.300 s Apr 19 2006 MiTek Industries, Inc. Mon Mar 12 11:49:01 2007 Page 1

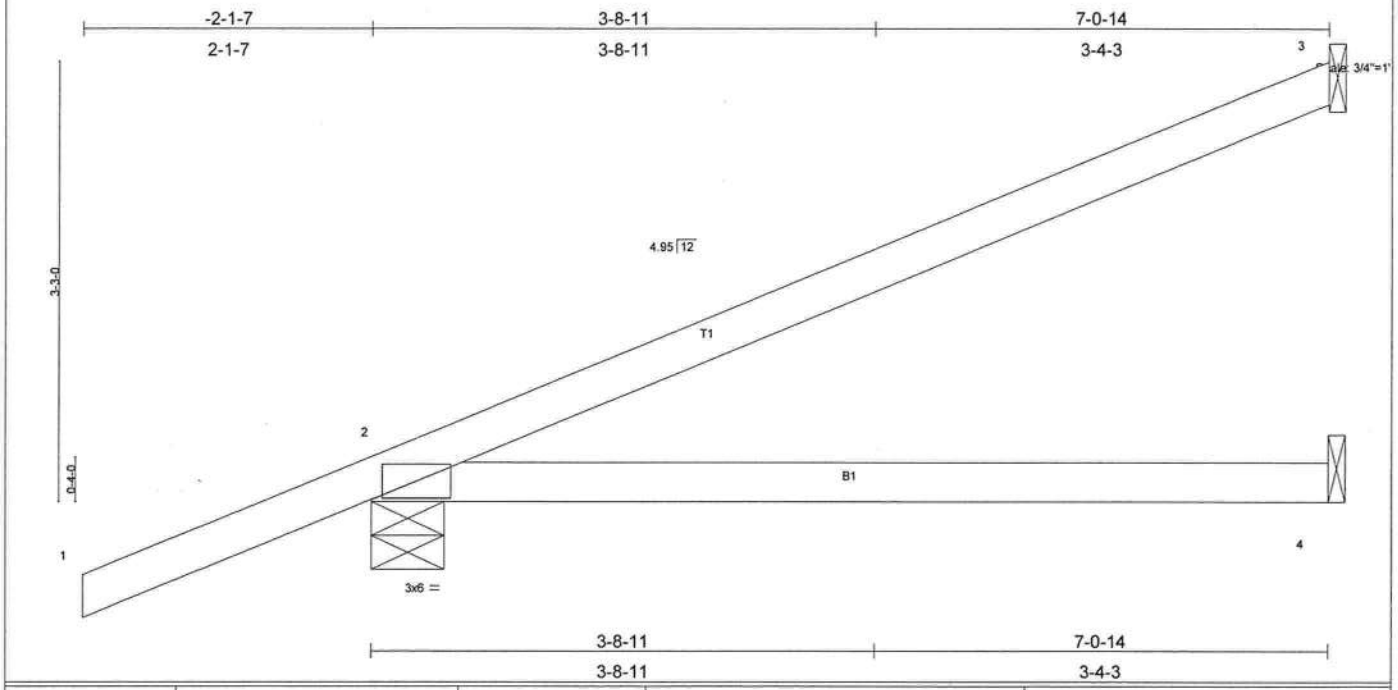

LOADING (psf)		SPACING 2-0-0		CSI		DEFL	in	(loc)	l/defl	L/d	PLATES	GRIP
TCLL	20.0	Plates Increase	1.25	TC	0.48	Vert(LL)	-0.09	2-4	>854	240	MT20	244/190
TCDL	7.0	Lumber Increase	1.25	BC	0.31	Vert(TL)	-0.16	2-4	>504	180		
BCLL	10.0	Rep Stress Incr	NO	WB	0.00	Horz(TL)	-0.00	3	n/a	n/a		
BCDL	5.0	Code FBC2004/TPI2002		(Matrix)							Weight: 25 lb	

LUMBER
TOP CHORD 2 X 4 SYP No.2
BOT CHORD 2 X 4 SYP No.2

BRACING
TOP CHORD Structural wood sheathing directly applied or 7-0-14 oc purlins.
BOT CHORD Rigid ceiling directly applied or 10-0-0 oc bracing.

REACTIONS (lb/size) 3=197/Mechanical, 2=327/0-6-7, 4=118/Mechanical
Max Horz 2=176(load case 4)
Max Uplift3=-162(load case 4), 2=-184(load case 4)

FORCES (lb) - Maximum Compression/Maximum Tension
TOP CHORD 1-2=0/43, 2-3=-85/54
BOT CHORD 2-4=0/0

JOINT STRESS INDEX
2 = 0.24

NOTES
1) Wind: ASCE 7-02; 110mph (3-second gust); h=20ft; TCDL=4.2psf; BCDL=3.0psf; Category II; Exp B; enclosed; MWFRS gable end zone; Lumber DOL=1.60 plate grip DOL=1.60.
2) All bearings are assumed to be SYP No.2 crushing capacity of 565.00 psi
3) Provide mechanical connection (by others) of truss to bearing plate capable of withstanding 162 lb uplift at joint 3 and 184 lb uplift at joint 2.
4) In the LOAD CASE(S) section, loads applied to the face of the truss are noted as front (F) or back (B).

LOAD CASE(S) Standard
1) Regular: Lumber Increase=1.25, Plate Increase=1.25
Uniform Loads (plf)
Vert: 1-2=-54
Trapezoidal Loads (plf)
Vert: 2=-4(F=25, B=25)-to-3=-95(F=-21, B=-21), 2=0(F=15, B=15)-to-4=-53(F=-12, B=-12)

MARCH 13,2007 TRUSS DESIGN ENGINEER:
THOMAS E. MILLER PE 56877, BYRON K. ANDERSON PE 60987
STRUCTURAL ENGINEERING AND INSPECTIONS, INC. EB 9196
16105 N. FLORIDA AVE. STE B, LUTZ, FL 33549

Job	Truss	Truss Type	Qty	Ply	ADAMS FRAMING - LOT 10 WISE ESTATES
L230379	HJ9	MONO TRUSS	1	1	Job Reference (optional)

Builders FirstSource, Lake City, Fl 32055 — 6.300 s Apr 19 2006 MiTek Industries, Inc. Mon Mar 12 13:10:04 2007 Page 1

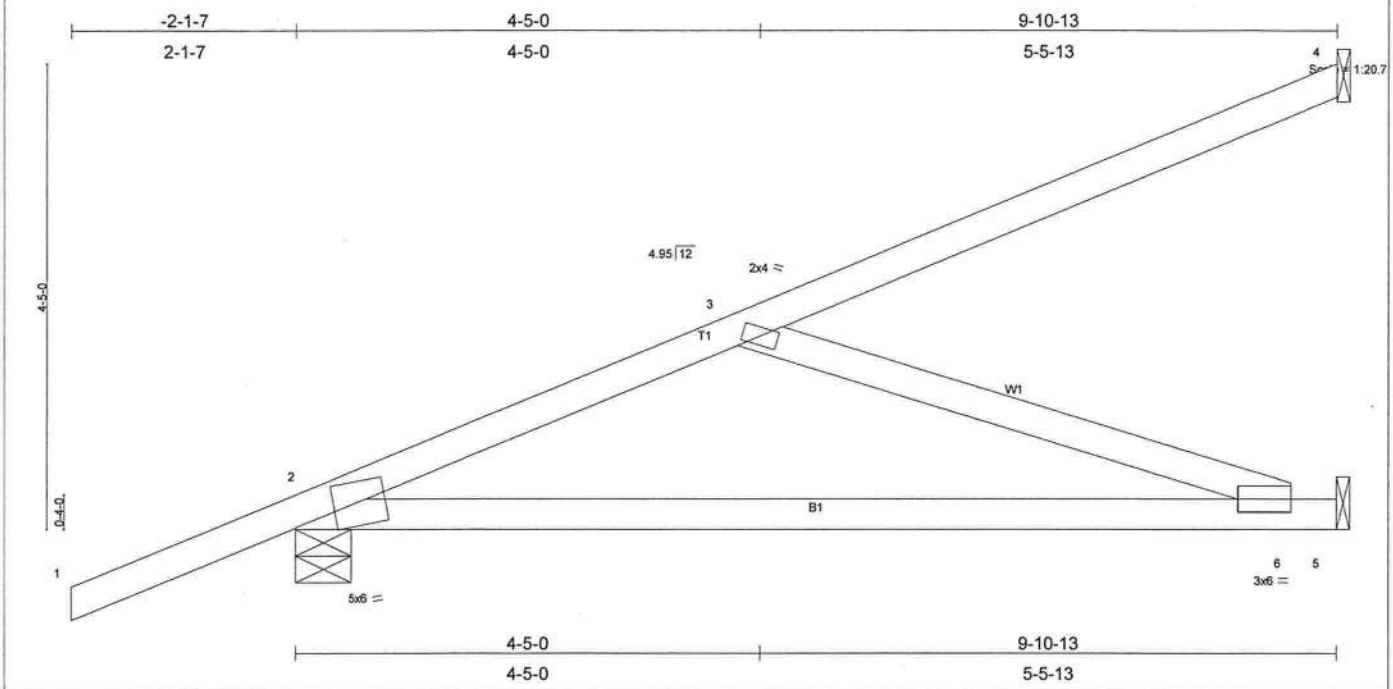

Plate Offsets (X,Y): [2:0-4-12,Edge]

LOADING (psf)		SPACING 2-0-0		CSI		DEFL	in	(loc)	l/defl	L/d	PLATES	GRIP
TCLL	20.0	Plates Increase	1.25	TC	0.57	Vert(LL)	-0.34	2-6	>334	240	MT20	244/190
TCDL	7.0	Lumber Increase	1.25	BC	0.85	Vert(TL)	-0.60	2-6	>190	180		
BCLL	10.0	Rep Stress Incr	NO	WB	0.35	Horz(TL)	0.01	5	n/a	n/a		
BCDL	5.0	Code FBC2004/TPI2002		(Matrix)							Weight: 42 lb	

LUMBER
TOP CHORD 2 X 4 SYP No.2
BOT CHORD 2 X 4 SYP No.2
WEBS 2 X 4 SYP No.3

BRACING
TOP CHORD Structural wood sheathing directly applied or 6-0-0 oc purlins.
BOT CHORD Rigid ceiling directly applied or 9-6-0 oc bracing.

REACTIONS (lb/size) 4=261/Mechanical, 2=488/0-6-7, 5=392/Mechanical
Max Horz 2=297(load case 4)
Max Uplift4=-251(load case 4), 2=-211(load case 4), 5=-80(load case 4)

FORCES (lb) - Maximum Compression/Maximum Tension
TOP CHORD 1-2=0/43, 2-3=-625/196, 3-4=-128/72
BOT CHORD 2-6=-409/597, 5-6=0/0
WEBS 3-6=-630/431

JOINT STRESS INDEX
2 = 0.92, 3 = 0.36 and 6 = 0.17

NOTES
1) Wind: ASCE 7-02; 110mph (3-second gust); h=20ft; TCDL=4.2psf; BCDL=3.0psf; Category II; Exp B; enclosed; MWFRS gable end zone; Lumber DOL=1.60 plate grip DOL=1.60.
2) All bearings are assumed to be SYP No.2 crushing capacity of 565.00 psi
3) Provide mechanical connection (by others) of truss to bearing plate capable of withstanding 251 lb uplift at joint 4, 211 lb uplift at joint 2 and 80 lb uplift at joint 5.
4) In the LOAD CASE(S) section, loads applied to the face of the truss are noted as front (F) or back (B).

LOAD CASE(S) Standard
1) Regular: Lumber Increase=1.25, Plate Increase=1.25
Uniform Loads (plf)
Vert: 1-2=-54
Trapezoidal Loads (plf)
Vert: 2=-4(F=25, B=25)-to-4=-134(F=-40, B=-40), 2=0(F=15, B=15)-to-5=-74(F=-22, B=-22)

MARCH 13,2007 TRUSS DESIGN ENGINEER:
THOMAS E. MILLER PE 56877, BYRON K. ANDERSON PE 60987
STRUCTURAL ENGINEERING AND INSPECTIONS, INC. EB 9196
16105 N. FLORIDA AVE. STE B, LUTZ, FL 33549

Job	Truss	Truss Type		Qty	Ply	ADAMS FRAMING - LOT 10 WISE ESTATES
L230379	PB01	HIP PIGGYBACK	4x6 =	1	1	Job Reference (optional)

Builders FirstSource, Lake City, Fl 32055 — 6.300 s Apr 19 2006 MiTek Industries, Inc. Mon Mar 12 12:40:53 2007 Page 1

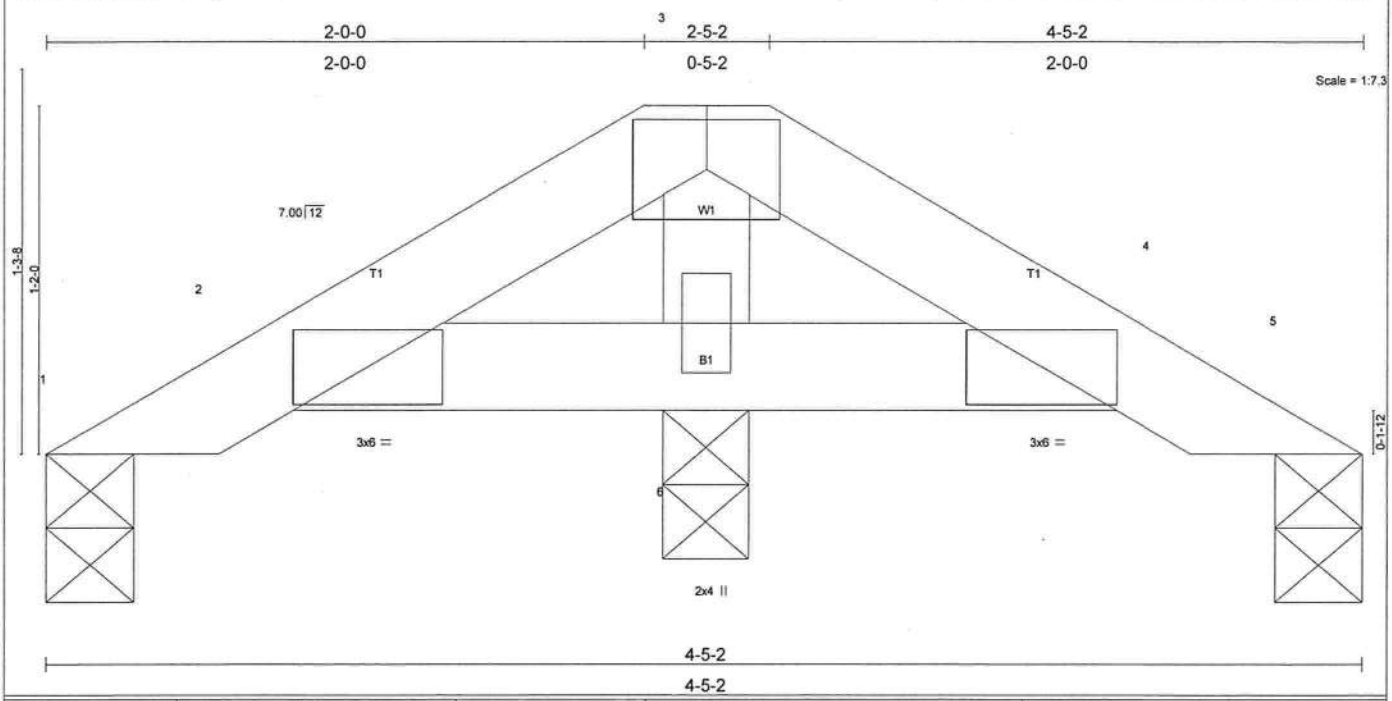

LOADING (psf)		SPACING 2-0-0		CSI		DEFL	in	(loc)	l/defl	L/d	PLATES	GRIP
TCLL	20.0	Plates Increase	1.25	TC	0.04	Vert(LL)	-0.00	2	>999	240	MT20	244/190
TCDL	7.0	Lumber Increase	1.25	BC	0.03	Vert(TL)	-0.00	2	>999	180		
BCLL	10.0	Rep Stress Incr	YES	WB	0.03	Horz(TL)	0.00	5	n/a	n/a		
BCDL	5.0	Code FBC2004/TPI2002		(Matrix)							Weight: 12 lb	

LUMBER
TOP CHORD 2 X 4 SYP No.2
BOT CHORD 2 X 4 SYP No.2
WEBS 2 X 4 SYP No.3

BRACING
TOP CHORD Structural wood sheathing directly applied or 4-5-2 oc purlins.
BOT CHORD Rigid ceiling directly applied or 10-0-0 oc bracing.

REACTIONS (lb/size) 1=38/0-3-8, 5=38/0-3-8, 6=246/0-3-8
Max Horz 1=-42(load case 3)
Max Uplift1=-18(load case 5), 5=-25(load case 6), 6=-75(load case 5)
Max Grav 1=48(load case 9), 5=48(load case 10), 6=246(load case 1)

FORCES (lb) - Maximum Compression/Maximum Tension
TOP CHORD 1-2=-35/41, 2-3=-24/89, 3-4=-17/89, 4-5=-21/17
BOT CHORD 2-6=-55/44, 4-6=-55/44
WEBS 3-6=-164/71

JOINT STRESS INDEX
2 = 0.10, 3 = 0.08, 4 = 0.10 and 6 = 0.06

NOTES
1) Unbalanced roof live loads have been considered for this design.
2) Wind: ASCE 7-02; 110mph (3-second gust); h=20ft; TCDL=4.2psf; BCDL=3.0psf; Category II; Exp B; enclosed; MWFRS gable end zone and C-C Interior(1) zone; Lumber DOL=1.60 plate grip DOL=1.60. This truss is designed for C-C for members and forces, and for MWFRS for reactions specified.
3) All bearings are assumed to be SYP No.2 crushing capacity of 565.00 psi
4) Bearing at joint(s) 1, 5 considers parallel to grain value using ANSI/TPI 1 angle to grain formula. Building designer should verify capacity of bearing surface.
5) Provide mechanical connection (by others) of truss to bearing plate capable of withstanding 18 lb uplift at joint 1, 25 lb uplift at joint 5 and 75 lb uplift at joint 6.

LOAD CASE(S) Standard

MARCH 13,2007 TRUSS DESIGN ENGINEER:
THOMAS E. MILLER PE 56877, BYRON K. ANDERSON PE 60987
STRUCTURAL ENGINEERING AND INSPECTIONS, INC. EB 9196
16105 N. FLORIDA AVE. STE B, LUTZ, FL 33549

Job	Truss	Truss Type	Qty	Ply	ADAMS FRAMING - LOT 10 WISE ESTATES
L230379	T01	HIP	1	1	Job Reference (optional)

Builders FirstSource, Lake City, Fl 32055

6.300 s Apr 19 2006 MiTek Industries, Inc. Mon Mar 12 13:09:48 2007 Page 1

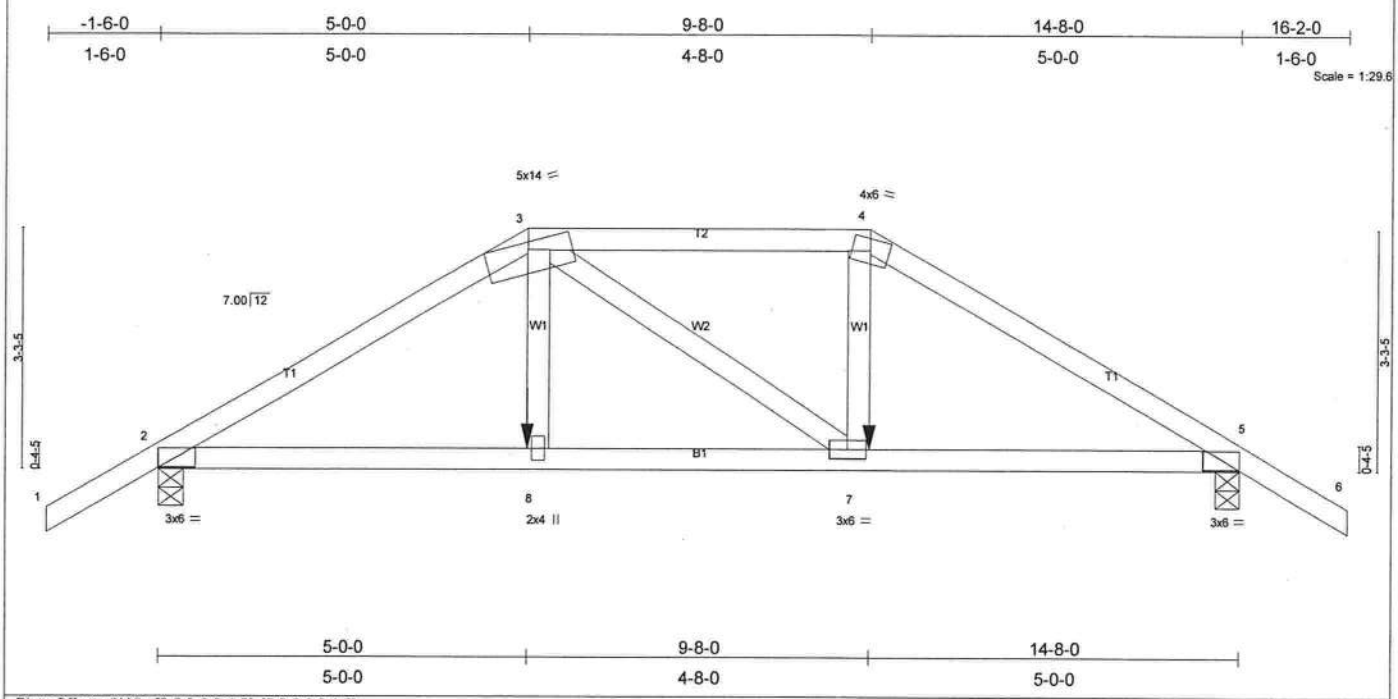

Plate Offsets (X,Y): [2:0-3-3,0-1-8], [5:0-3-3,0-1-8]

LOADING (psf)		SPACING 2-0-0		CSI		DEFL	in	(loc)	l/defl	L/d	PLATES	GRIP
TCLL	20.0	Plates Increase	1.25	TC	0.32	Vert(LL)	-0.05	7-8	>999	240	MT20	244/190
TCDL	7.0	Lumber Increase	1.25	BC	0.34	Vert(TL)	-0.08	7-8	>999	180		
BCLL	10.0	Rep Stress Incr	NO	WB	0.15	Horz(TL)	0.03	5	n/a	n/a		
BCDL	5.0	Code FBC2004/TPI2002		(Matrix)							Weight: 67 lb	

LUMBER
TOP CHORD 2 X 4 SYP No.2
BOT CHORD 2 X 4 SYP No.2
WEBS 2 X 4 SYP No.3

BRACING
TOP CHORD Structural wood sheathing directly applied or 4-10-15 oc purlins.
BOT CHORD Rigid ceiling directly applied or 7-9-5 oc bracing.

REACTIONS (lb/size) 2=1065/0-4-0, 5=1065/0-4-0
Max Horz 2=-108(load case 2)
Max Uplift2=-539(load case 4), 5=-539(load case 5)

FORCES (lb) - Maximum Compression/Maximum Tension
TOP CHORD 1-2=0/40, 2-3=-1578/713, 3-4=-1317/671, 4-5=-1579/714, 5-6=0/40
BOT CHORD 2-8=-650/1294, 7-8=-657/1315, 5-7=-561/1295
WEBS 3-8=-134/438, 3-7=-106/105, 4-7=-171/473

JOINT STRESS INDEX
2 = 0.68, 3 = 0.87, 4 = 0.70, 5 = 0.68, 7 = 0.31 and 8 = 0.32

NOTES
1) Unbalanced roof live loads have been considered for this design.
2) Wind: ASCE 7-02; 110mph (3-second gust); h=20ft; TCDL=4.2psf; BCDL=3.0psf; Category II; Exp B; enclosed; MWFRS gable end zone; Lumber DOL=1.60 plate grip DOL=1.60.
3) Provide adequate drainage to prevent water ponding.
4) All bearings are assumed to be SYP No.2 crushing capacity of 565.00 psi
5) Provide mechanical connection (by others) of truss to bearing plate capable of withstanding 539 lb uplift at joint 2 and 539 lb uplift at joint 5.
6) Girder carries hip end with 5-0-0 end setback.
7) Hanger(s) or other connection device(s) shall be provided sufficient to support concentrated load(s) 245 lb down and 170 lb up at 9-8-0, and 245 lb down and 170 lb up at 5-0-0 on bottom chord. The design/selection of such connection device(s) is the responsibility of others.
8) In the LOAD CASE(S) section, loads applied to the face of the truss are noted as front (F) or back (B).

LOAD CASE(S) Standard
1) Regular: Lumber Increase=1.25, Plate Increase=1.25
Uniform Loads (plf)
Vert: 1-3=-54, 3-4=-90(F=-36), 4-6=-54, 2-8=-30, 7-8=-50(F=-20), 5-7=-30
Concentrated Loads (lb)
Vert: 8=-245(F) 7=-245(F)

~~MARCH 13,2007 TRUSS DESIGN ENGINEER:~~
THOMAS E. MILLER PE 56877, BYRON K. ANDERSON PE 60987
STRUCTURAL ENGINEERING AND INSPECTIONS, INC. EB 9196
16105 N. FLORIDA AVE. STE B, LUTZ, FL 33549

Job	Truss	Truss Type	Qty	Ply	ADAMS FRAMING - LOT 10 WISE ESTATES
L230379	T02	HIP	1	1	Job Reference (optional)

Builders FirstSource, Lake City, Fl 32055 — 6.300 s Apr 19 2006 MiTek Industries, Inc. Mon Mar 12 13:13:33 2007 Page 1

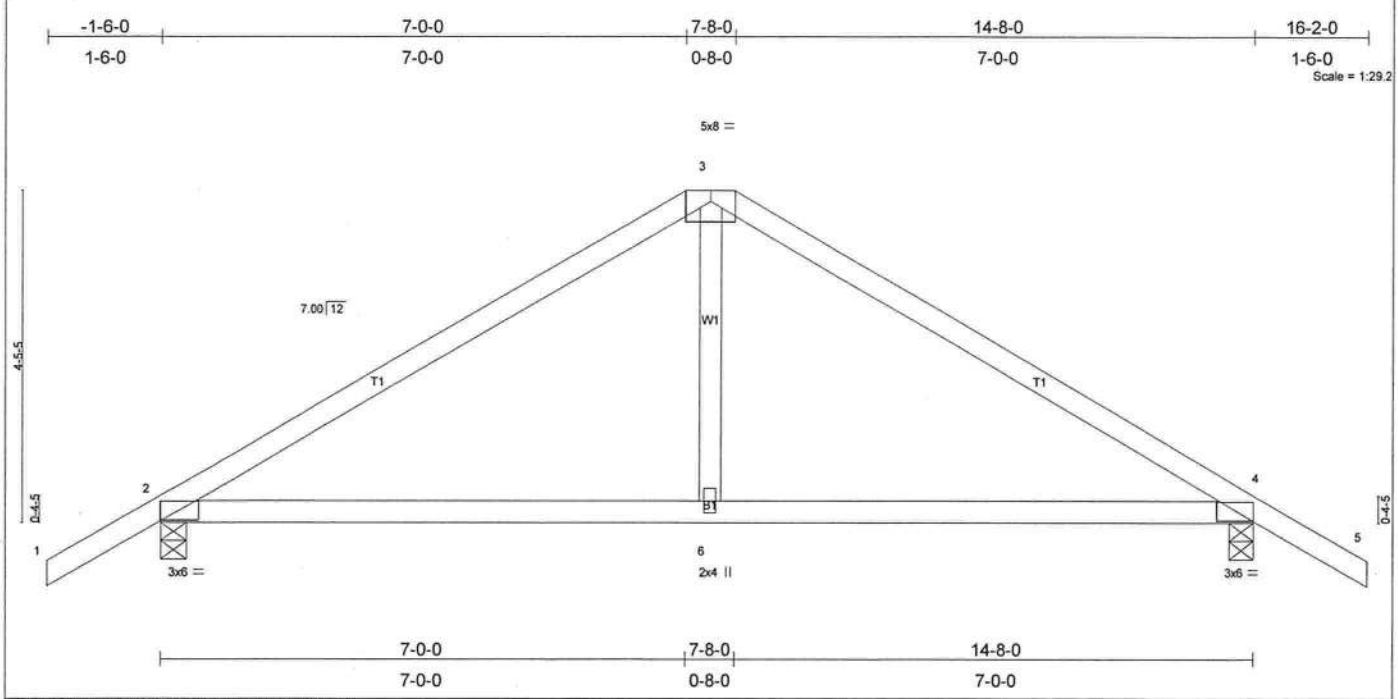

Plate Offsets (X,Y): [2:0-3-3,0-1-8], [4:0-3-3,0-1-8]

LOADING (psf)		SPACING	2-0-0	CSI		DEFL	in	(loc)	l/defl	L/d	PLATES	GRIP
TCLL	20.0	Plates Increase	1.25	TC	0.38	Vert(LL)	-0.10	2-6	>999	240	MT20	244/190
TCDL	7.0	Lumber Increase	1.25	BC	0.47	Vert(TL)	-0.15	2-6	>999	180		
BCLL	10.0	Rep Stress Incr	YES	WB	0.09	Horz(TL)	0.01	4	n/a	n/a		
BCDL	5.0	Code FBC2004/TPI2002		(Matrix)							Weight: 58 lb	

LUMBER
TOP CHORD 2 X 4 SYP No.2
BOT CHORD 2 X 4 SYP No.2
WEBS 2 X 4 SYP No.3

BRACING
TOP CHORD Structural wood sheathing directly applied or 6-0-0 oc purlins.
BOT CHORD Rigid ceiling directly applied or 10-0-0 oc bracing.

REACTIONS (lb/size) 2=692/0-4-0, 4=692/0-4-0
Max Horz 2=154(load case 4)
Max Uplift2=-291(load case 5), 4=-291(load case 6)

FORCES (lb) - Maximum Compression/Maximum Tension
TOP CHORD 1-2=0/40, 2-3=-781/236, 3-4=-781/236, 4-5=0/40
BOT CHORD 2-6=-105/595, 4-6=-105/595
WEBS 3-6=0/276

JOINT STRESS INDEX
2 = 0.54, 3 = 0.92, 4 = 0.54 and 6 = 0.20

NOTES
1) Unbalanced roof live loads have been considered for this design.
2) Wind: ASCE 7-02; 110mph (3-second gust); h=20ft; TCDL=4.2psf; BCDL=3.0psf; Category II; Exp B; enclosed; MWFRS gable end zone and C-C Interior(1) zone; Lumber DOL=1.60 plate grip DOL=1.60. This truss is designed for C-C for members and forces, and for MWFRS for reactions specified.
3) All bearings are assumed to be SYP No.2 crushing capacity of 565.00 psi
4) Provide mechanical connection (by others) of truss to bearing plate capable of withstanding 291 lb uplift at joint 2 and 291 lb uplift at joint 4.

LOAD CASE(S) Standard

~~MARCH 13,2007 TRUSS DESIGN ENGINEER:~~
THOMAS E. MILLER PE 56877, BYRON K. ANDERSON PE 60987
STRUCTURAL ENGINEERING AND INSPECTIONS, INC. EB 9196
16105 N. FLORIDA AVE. STE B, LUTZ, FL 33549

Job	Truss	Truss Type	Qty	Ply	ADAMS FRAMING - LOT 10 WISE ESTATES
L230379	T03	COMMON	2	1	Job Reference (optional)

Builders FirstSource, Lake City, Fl 32055 — 6.300 s Apr 19 2006 MiTek Industries, Inc. Mon Mar 12 13:13:41 2007 Page 1

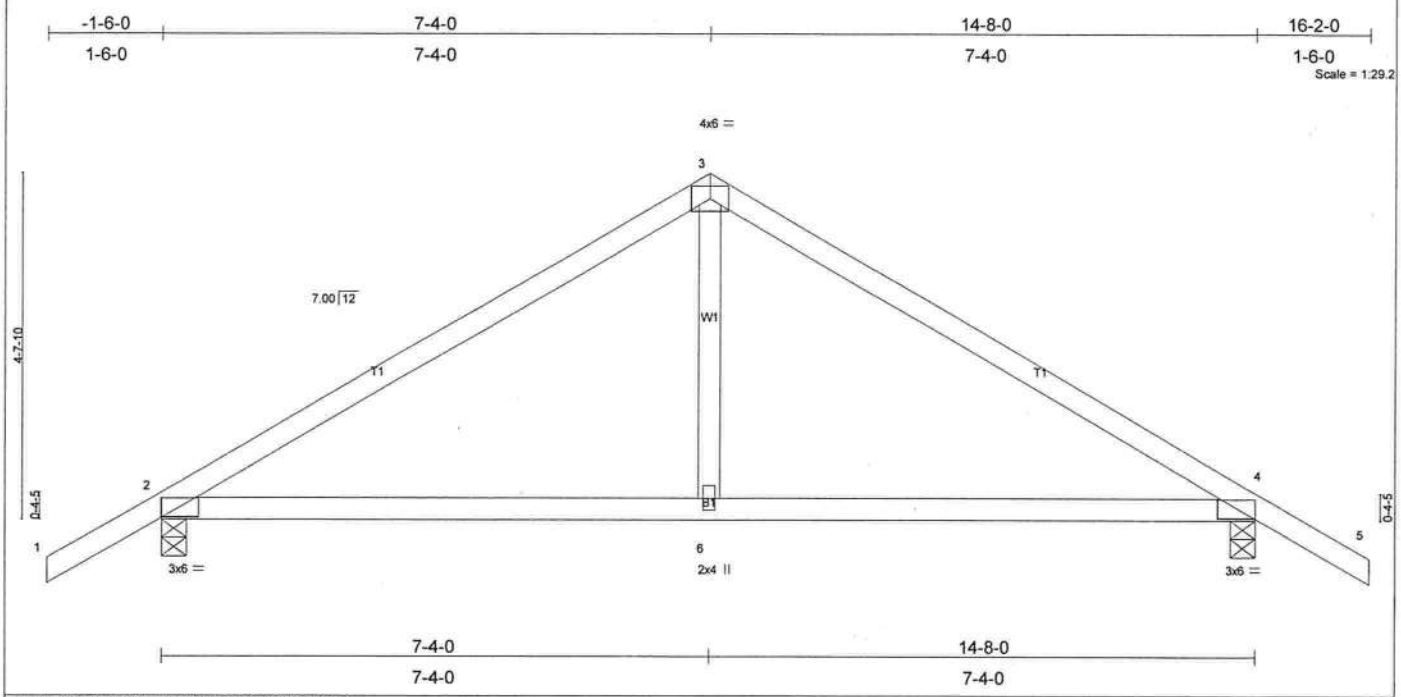

Plate Offsets (X,Y): [2:0-3-3,0-1-8], [4:0-3-3,0-1-8]

LOADING (psf)		SPACING	2-0-0	CSI		DEFL	in	(loc)	l/defl	L/d	PLATES	GRIP
TCLL	20.0	Plates Increase	1.25	TC	0.38	Vert(LL)	-0.10	4-6	>999	240	MT20	244/190
TCDL	7.0	Lumber Increase	1.25	BC	0.47	Vert(TL)	-0.15	4-6	>999	180		
BCLL	10.0	Rep Stress Incr	YES	WB	0.09	Horz(TL)	0.01	4	n/a	n/a		
BCDL	5.0	Code FBC2004/TPI2002		(Matrix)							Weight: 59 lb	

LUMBER
TOP CHORD 2 X 4 SYP No.2
BOT CHORD 2 X 4 SYP No.2
WEBS 2 X 4 SYP No.3

BRACING
TOP CHORD Structural wood sheathing directly applied or 6-0-0 oc purlins.
BOT CHORD Rigid ceiling directly applied or 10-0-0 oc bracing.

REACTIONS (lb/size) 2=692/0-4-0, 4=692/0-4-0
Max Horz 2=154(load case 4)
Max Uplift2=-291(load case 5), 4=-291(load case 6)

FORCES (lb) - Maximum Compression/Maximum Tension
TOP CHORD 1-2=0/40, 2-3=-781/236, 3-4=-781/236, 4-5=0/40
BOT CHORD 2-6=-105/595, 4-6=-105/595
WEBS 3-6=0/276

JOINT STRESS INDEX
2 = 0.54, 3 = 0.79, 4 = 0.54 and 6 = 0.20

NOTES
1) Unbalanced roof live loads have been considered for this design.
2) Wind: ASCE 7-02; 110mph (3-second gust); h=20ft; TCDL=4.2psf; BCDL=3.0psf; Category II; Exp B; enclosed; MWFRS gable end zone and C-C Interior(1) zone; Lumber DOL=1.60 plate grip DOL=1.60. This truss is designed for C-C for members and forces, and for MWFRS for reactions specified.
3) All bearings are assumed to be SYP No.2 crushing capacity of 565.00 psi
4) Provide mechanical connection (by others) of truss to bearing plate capable of withstanding 291 lb uplift at joint 2 and 291 lb uplift at joint 4.

LOAD CASE(S) Standard

MARCH 13,2007 TRUSS DESIGN ENGINEER:
THOMAS E. MILLER PE 56877, BYRON K. ANDERSON PE 60987
STRUCTURAL ENGINEERING AND INSPECTIONS, INC. EB 9196
16105 N. FLORIDA AVE. STE B, LUTZ, FL 33549

Job	Truss	Truss Type	Qty	Ply	ADAMS FRAMING - LOT 10 WISE ESTATES
L230379	T04	SPECIAL	4	1	Job Reference (optional)

Builders FirstSource, Lake City, Fl 32055 — 6.300 s Apr 19 2006 MiTek Industries, Inc. Mon Mar 12 13:14:08 2007 Page 1

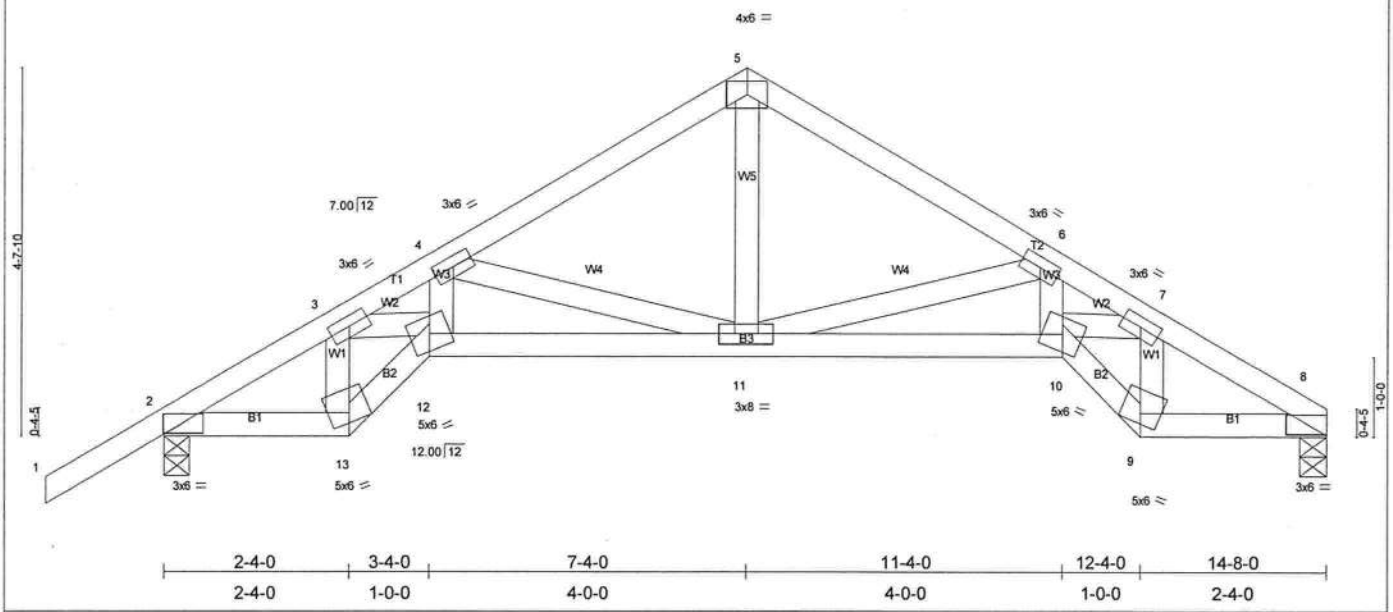

Plate Offsets (X,Y): [2:0-3-3,0-1-8], [8:0-3-3,0-1-8]

LOADING (psf)		SPACING	2-0-0	CSI		DEFL	in	(loc)	l/defl	L/d	PLATES	GRIP
TCLL	20.0	Plates Increase	1.25	TC	0.19	Vert(LL)	-0.06	10-11	>999	240	MT20	244/190
TCDL	7.0	Lumber Increase	1.25	BC	0.38	Vert(TL)	-0.10	10-11	>999	180		
BCLL	10.0	Rep Stress Incr	YES	WB	0.25	Horz(TL)	0.08	8	n/a	n/a		
BCDL	5.0	Code FBC2004/TPI2002		(Matrix)							Weight: 76 lb	

LUMBER
TOP CHORD 2 X 4 SYP No.2
BOT CHORD 2 X 4 SYP No.2
WEBS 2 X 4 SYP No.3

BRACING
TOP CHORD Structural wood sheathing directly applied or 4-9-11 oc purlins.
BOT CHORD Rigid ceiling directly applied or 9-9-13 oc bracing.

REACTIONS (lb/size) 8=597/0-4-0, 2=697/0-4-0
Max Horz 2=169(load case 4)
Max Uplift8=-191(load case 6), 2=-294(load case 5)

FORCES (lb) - Maximum Compression/Maximum Tension
TOP CHORD 1-2=0/40, 2-3=-931/247, 3-4=-1671/493, 4-5=-830/256, 5-6=-830/266, 6-7=-1721/510, 7-8=-984/307
BOT CHORD 2-13=-200/738, 12-13=-244/932, 11-12=-412/1371, 10-11=-357/1404, 9-10=-265/997, 8-9=-220/793
WEBS 3-13=-591/192, 3-12=-252/792, 4-12=-84/499, 4-11=-704/297, 5-11=-117/545, 6-11=-739/312, 6-10=-110/541, 7-10=-177/778, 7-9=-605/168

JOINT STRESS INDEX
2 = 0.42, 3 = 0.39, 4 = 0.41, 5 = 0.28, 6 = 0.41, 7 = 0.39, 8 = 0.42, 9 = 0.30, 10 = 0.48, 11 = 0.34, 12 = 0.48 and 13 = 0.30

NOTES
1) Unbalanced roof live loads have been considered for this design.
2) Wind: ASCE 7-02; 110mph (3-second gust); h=20ft; TCDL=4.2psf; BCDL=3.0psf; Category II; Exp B; enclosed; MWFRS gable end zone and C-C Interior(1) zone; Lumber DOL=1.60 plate grip DOL=1.60. This truss is designed for C-C for members and forces, and for MWFRS for reactions specified.
3) All bearings are assumed to be SYP No.2 crushing capacity of 565.00 psi
4) Provide mechanical connection (by others) of truss to bearing plate capable of withstanding 191 lb uplift at joint 8 and 294 lb uplift at joint 2.

LOAD CASE(S) Standard

MARCH 13,2007 TRUSS DESIGN ENGINEER:
THOMAS E. MILLER PE 56877, BYRON K. ANDERSON PE 60987
STRUCTURAL ENGINEERING AND INSPECTIONS, INC. EB 9196
16105 N. FLORIDA AVE. STE B, LUTZ, FL 33549

Job	Truss	Truss Type	Qty	Ply	ADAMS FRAMING - LOT 10 WISE ESTATES
L230379	T05	SPECIAL	1	1	Job Reference (optional)

Builders FirstSource, Lake City, Fl 32055 — 6.300 s Apr 19 2006 MiTek Industries, Inc. Mon Mar 12 13:17:00 2007 Page 1

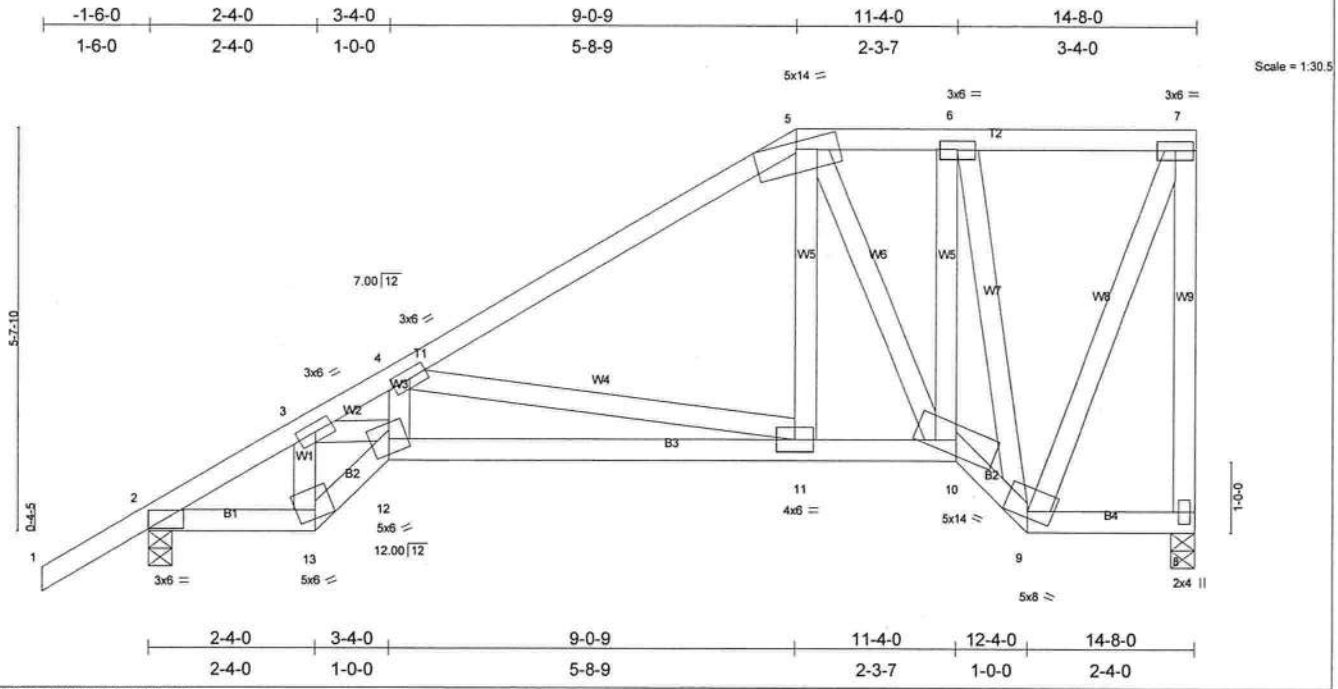

Plate Offsets (X,Y): [2:0-3-3,0-1-8]

LOADING (psf)		SPACING 2-0-0		CSI		DEFL	in	(loc)	l/defl	L/d	PLATES	GRIP
TCLL	20.0	Plates Increase	1.25	TC	0.36	Vert(LL)	-0.09	11-12	>999	240	MT20	244/190
TCDL	7.0	Lumber Increase	1.25	BC	0.40	Vert(TL)	-0.14	11-12	>999	180		
BCLL	10.0	Rep Stress Incr	YES	WB	0.59	Horz(TL)	0.07	8	n/a	n/a		
BCDL	5.0	Code FBC2004/TPI2002		(Matrix)							Weight: 105 lb	

LUMBER
TOP CHORD 2 X 4 SYP No.2
BOT CHORD 2 X 4 SYP No.2
WEBS 2 X 4 SYP No.3

BRACING
TOP CHORD Structural wood sheathing directly applied or 4-7-10 oc purlins, except end verticals.
BOT CHORD Rigid ceiling directly applied or 7-3-12 oc bracing.

REACTIONS (lb/size) 8=598/0-4-0, 2=698/0-4-0
Max Horz 2=300(load case 5)
Max Uplift8=-204(load case 5), 2=-268(load case 5)

FORCES (lb) - Maximum Compression/Maximum Tension
TOP CHORD 1-2=0/40, 2-3=-917/182, 3-4=-1772/630, 4-5=-660/179, 5-6=-329/123, 6-7=-207/73, 7-8=-575/215
BOT CHORD 2-13=-342/723, 12-13=-407/941, 11-12=-737/1480, 10-11=-224/521, 9-10=-153/401, 8-9=-5/10
WEBS 3-13=-623/284, 3-12=-458/929, 4-12=-127/534, 4-11=-988/524, 5-11=-85/384, 5-10=-412/217, 6-10=-265/563, 6-9=-659/271, 7-9=-182/520

JOINT STRESS INDEX
2 = 0.41, 3 = 0.45, 4 = 0.40, 5 = 0.78, 6 = 0.37, 7 = 0.48, 8 = 0.27, 9 = 0.36, 10 = 0.48, 11 = 0.28, 12 = 0.50 and 13 = 0.27

NOTES
1) Wind: ASCE 7-02; 110mph (3-second gust); h=20ft; TCDL=4.2psf; BCDL=3.0psf; Category II; Exp B; enclosed; MWFRS gable end zone and C-C Interior(1) zone; Lumber DOL=1.60 plate grip DOL=1.60. This truss is designed for C-C for members and forces, and for MWFRS for reactions specified.
2) Provide adequate drainage to prevent water ponding.
3) All bearings are assumed to be SYP No.2 crushing capacity of 565.00 psi
4) Provide mechanical connection (by others) of truss to bearing plate capable of withstanding 204 lb uplift at joint 8 and 268 lb uplift at joint 2.

LOAD CASE(S) Standard

MARCH 13,2007 TRUSS DESIGN ENGINEER:
THOMAS E. MILLER PE 56877, BYRON K. ANDERSON PE 60987
STRUCTURAL ENGINEERING AND INSPECTIONS, INC. EB 9196
16105 N. FLORIDA AVE. STE B, LUTZ, FL 33549

Job	Truss	Truss Type	Qty	Ply	ADAMS FRAMING - LOT 10 WISE ESTATES
L230379	T06	SPECIAL	1	1	Job Reference (optional)

Builders FirstSource, Lake City, Fl 32055 — 6.300 s Apr 19 2006 MiTek Industries, Inc. Mon Mar 12 13:21:11 2007 Page 1

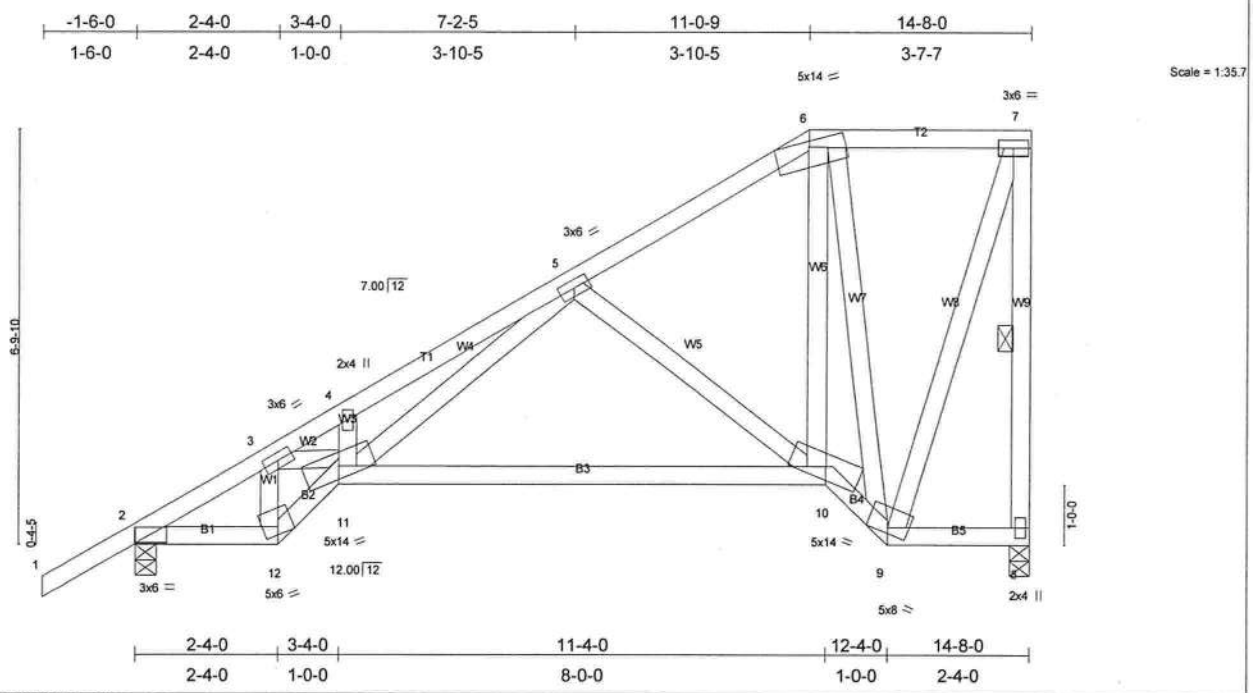

Plate Offsets (X,Y): [2:0-3-3,0-1-8]

LOADING (psf)		SPACING	2-0-0	CSI		DEFL	in	(loc)	l/defl	L/d	PLATES	GRIP
TCLL	20.0	Plates Increase	1.25	TC	0.18	Vert(LL)	-0.14	10-11	>999	240	MT20	244/190
TCDL	7.0	Lumber Increase	1.25	BC	0.36	Vert(TL)	-0.24	10-11	>728	180		
BCLL	10.0	Rep Stress Incr	YES	WB	0.61	Horz(TL)	0.07	8	n/a	n/a		
BCDL	5.0	Code FBC2004/TPI2002		(Matrix)							Weight: 105 lb	

LUMBER
TOP CHORD 2 X 4 SYP No.2
BOT CHORD 2 X 4 SYP No.2
WEBS 2 X 4 SYP No.3

BRACING
TOP CHORD Structural wood sheathing directly applied or 4-8-2 oc purlins, except end verticals.
BOT CHORD Rigid ceiling directly applied or 9-3-13 oc bracing.
WEBS 1 Row at midpt 7-8

REACTIONS (lb/size) 8=598/0-4-0, 2=698/0-4-0
Max Horz 2=354(load case 5)
Max Uplift8=-246(load case 5), 2=-254(load case 5)

FORCES (lb) - Maximum Compression/Maximum Tension
TOP CHORD 1-2=0/40, 2-3=-913/167, 3-4=-1696/549, 4-5=-1698/633, 5-6=-401/102, 6-7=-171/79, 7-8=-573/259
BOT CHORD 2-12=-389/730, 11-12=-448/947, 10-11=-369/649, 9-10=-167/550, 8-9=-4/8
WEBS 3-12=-650/296, 3-11=-356/813, 4-11=-86/135, 5-11=-442/1058, 5-10=-447/304, 6-10=-254/834, 7-9=-241/511, 6-9=-867/329

JOINT STRESS INDEX
2 = 0.48, 3 = 0.40, 4 = 0.07, 5 = 0.69, 6 = 0.28, 7 = 0.49, 8 = 0.27, 9 = 0.37, 10 = 0.69, 11 = 0.69 and 12 = 0.35

NOTES
1) Unbalanced roof live loads have been considered for this design.
2) Wind: ASCE 7-02; 110mph (3-second gust); h=20ft; TCDL=4.2psf; BCDL=3.0psf; Category II; Exp B; enclosed; MWFRS gable end zone and C-C Interior(1) zone; Lumber DOL=1.60 plate grip DOL=1.60. This truss is designed for C-C for members and forces, and for MWFRS for reactions specified.
3) Provide adequate drainage to prevent water ponding.
4) All bearings are assumed to be SYP No.2 crushing capacity of 565.00 psi
5) Provide mechanical connection (by others) of truss to bearing plate capable of withstanding 246 lb uplift at joint 8 and 254 lb uplift at joint 2.

LOAD CASE(S) Standard

MARCH 13,2007 TRUSS DESIGN ENGINEER:
THOMAS E. MILLER PE 56877, BYRON K. ANDERSON PE 60987
STRUCTURAL ENGINEERING AND INSPECTIONS, INC. EB 9196
16105 N. FLORIDA AVE. STE B, LUTZ, FL 33549

Job	Truss	Truss Type	Qty	Ply	ADAMS FRAMING - LOT 10 WISE ESTATES
L230379	T07	MONO HIP	1	1	Job Reference (optional)

Builders FirstSource, Lake City, Fl 32055 — 6.300 s Apr 19 2006 MiTek Industries, Inc. Mon Mar 12 13:28:12 2007 Page 1

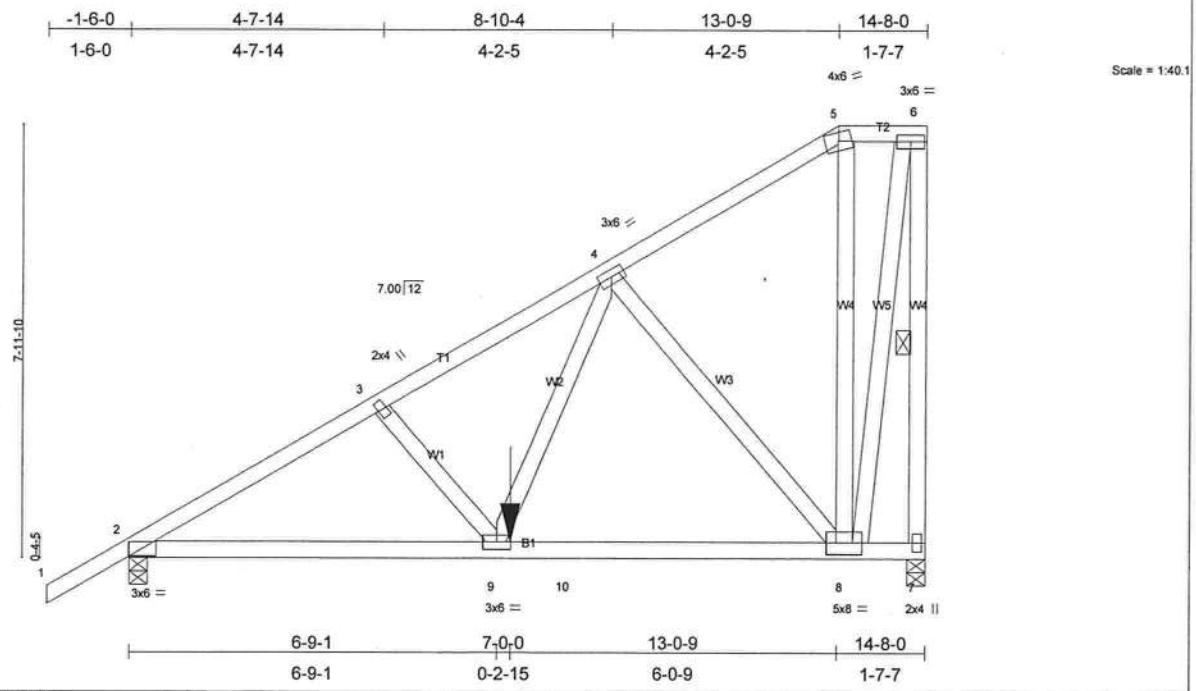

Plate Offsets (X,Y): [2:0-3-3,0-1-8]

LOADING (psf)		SPACING	2-0-0	CSI		DEFL	in	(loc)	l/defl	L/d	PLATES	GRIP
TCLL	20.0	Plates Increase	1.25	TC	0.27	Vert(LL)	-0.16	8-9	>999	240	MT20	244/190
TCDL	7.0	Lumber Increase	1.25	BC	0.73	Vert(TL)	-0.26	8-9	>652	180		
BCLL	10.0	Rep Stress Incr	NO	WB	0.61	Horz(TL)	0.02	7	n/a	n/a		
BCDL	5.0	Code FBC2004/TPI2002		(Matrix)							Weight: 105 lb	

LUMBER
TOP CHORD 2 X 4 SYP No.2
BOT CHORD 2 X 4 SYP No.2
WEBS 2 X 4 SYP No.3

BRACING
TOP CHORD Structural wood sheathing directly applied or 5-4-15 oc purlins, except end verticals.
BOT CHORD Rigid ceiling directly applied or 8-3-3 oc bracing.
WEBS 1 Row at midpt 6-7

REACTIONS (lb/size) 7=1114/0-4-0, 2=928/0-4-0
Max Horz 2=408(load case 4)
Max Uplift7=-532(load case 4), 2=-332(load case 4)

FORCES (lb) - Maximum Compression/Maximum Tension
TOP CHORD 1-2=0/40, 2-3=-1319/342, 3-4=-1171/335, 4-5=-318/70, 5-6=-219/103, 6-7=-1256/572
BOT CHORD 2-9=-568/1071, 9-10=-352/670, 8-10=-352/670, 7-8=-4/8
WEBS 3-9=-172/179, 4-9=-277/784, 4-8=-705/386, 5-8=-31/78, 6-8=-584/1239

JOINT STRESS INDEX
2 = 0.58, 3 = 0.11, 4 = 0.55, 5 = 0.21, 6 = 0.85, 7 = 0.49, 8 = 0.68 and 9 = 0.69

NOTES
1) Wind: ASCE 7-02; 110mph (3-second gust); h=20ft; TCDL=4.2psf; BCDL=3.0psf; Category II; Exp B; enclosed; MWFRS gable end zone; Lumber DOL=1.60 plate grip DOL=1.60.
2) Provide adequate drainage to prevent water ponding.
3) All bearings are assumed to be SYP No.2 crushing capacity of 565.00 psi
4) Provide mechanical connection (by others) of truss to bearing plate capable of withstanding 532 lb uplift at joint 7 and 332 lb uplift at joint 2.
5) Girder carries tie-in span(s): 6-4-8 from 8-0-0 to 14-8-0
6) Hanger(s) or other connection device(s) shall be provided sufficient to support concentrated load(s) 193 lb down and 92 lb up at 7-0-0 on bottom chord. The design/selection of such connection device(s) is the responsibility of others.
7) In the LOAD CASE(S) section, loads applied to the face of the truss are noted as front (F) or back (B).

LOAD CASE(S) Standard
1) Regular: Lumber Increase=1.25, Plate Increase=1.25
Uniform Loads (plf)
Vert: 1-5=-54, 5-6=-54, 2-10=-30, 7-10=-115(F=-85)
Concentrated Loads (lb)
Vert: 9=-193(F)

MARCH 13,2007 TRUSS DESIGN ENGINEER:
THOMAS E. MILLER PE 56877, BYRON K. ANDERSON PE 60987
STRUCTURAL ENGINEERING AND INSPECTIONS, INC. EB 9196
16105 N. FLORIDA AVE. STE B, LUTZ, FL 33549

Job	Truss	Truss Type	Qty	Ply	ADAMS FRAMING - LOT 10 WISE ESTATES
L230379	T08	SPECIAL	1	1	Job Reference (optional)

Builders FirstSource, Lake City, Fl 32055 — 6.300 s Apr 19 2006 MiTek Industries, Inc. Mon Mar 12 13:27:18 2007 Page 1

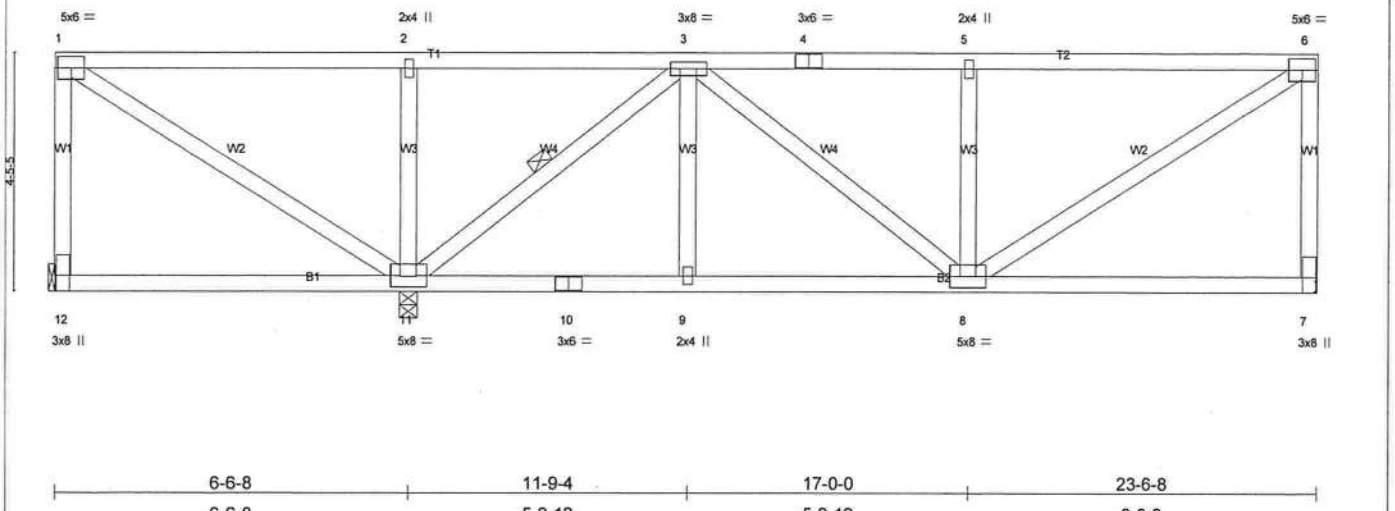

LOADING (psf)		SPACING 2-0-0		CSI		DEFL	in	(loc)	l/defl	L/d	PLATES	GRIP
TCLL	20.0	Plates Increase	1.25	TC	0.83	Vert(LL)	-0.16	7-8	>999	240	MT20	244/190
TCDL	7.0	Lumber Increase	1.25	BC	0.87	Vert(TL)	-0.26	7-8	>766	180		
BCLL	10.0	Rep Stress Incr	NO	WB	0.69	Horz(TL)	0.02	7	n/a	n/a		
BCDL	5.0	Code FBC2004/TPI2002		(Matrix)							Weight: 139 lb	

LUMBER
TOP CHORD 2 X 4 SYP No.2
BOT CHORD 2 X 4 SYP No.2 *Except*
B1 2 X 4 SYP No.1D
WEBS 2 X 4 SYP No.3 *Except*
W1 2 X 4 SYP No.2, W1 2 X 4 SYP No.2

BRACING
TOP CHORD Structural wood sheathing directly applied or 5-1-8 oc purlins, except end verticals.
BOT CHORD Rigid ceiling directly applied or 10-0-0 oc bracing.
WEBS 1 Row at midpt 3-11

REACTIONS (lb/size) 12=193/Mechanical, 7=1418/Mechanical, 11=2722/0-4-0
Max Uplift12=-70(load case 2), 7=-534(load case 2), 11=-1032(load case 2)

FORCES (lb) - Maximum Compression/Maximum Tension
TOP CHORD 1-12=-51/202, 1-2=-181/465, 2-3=-181/465, 3-4=-1402/527, 4-5=-1402/527, 5-6=-1402/527, 6-7=-1008/430
BOT CHORD 11-12=-42/109, 10-11=-379/1011, 9-10=-379/1011, 8-9=-379/1011, 7-8=-48/127
WEBS 1-11=-685/265, 2-11=-333/237, 3-11=-1885/714, 3-9=-151/606, 3-8=-189/499, 5-8=-315/230, 6-8=-571/1520

JOINT STRESS INDEX
1 = 0.78, 2 = 0.34, 3 = 0.92, 4 = 0.25, 5 = 0.34, 6 = 0.52, 7 = 0.77, 8 = 0.70, 9 = 0.44, 10 = 0.59, 11 = 0.44 and 12 = 0.78

NOTES
1) Wind: ASCE 7-02; 110mph (3-second gust); h=20ft; TCDL=4.2psf; BCDL=3.0psf; Category II; Exp B; enclosed; MWFRS gable end zone; Lumber DOL=1.60 plate grip DOL=1.60.
2) Provide adequate drainage to prevent water ponding.
3) All bearings are assumed to be SYP No.2 crushing capacity of 565.00 psi
4) Provide mechanical connection (by others) of truss to bearing plate capable of withstanding 70 lb uplift at joint 12, 534 lb uplift at joint 7 and 1032 lb uplift at joint 11.
5) Girder carries tie-in span(s): 7-0-0 from 0-0-0 to 23-6-8
6) In the LOAD CASE(S) section, loads applied to the face of the truss are noted as front (F) or back (B).

LOAD CASE(S) Standard
1) Regular: Lumber Increase=1.25, Plate Increase=1.25
Uniform Loads (plf)
Vert: 1-6=-54, 7-12=-132(F=-102)

MARCH 13,2007 TRUSS DESIGN ENGINEER:
THOMAS E. MILLER PE 56877, BYRON K. ANDERSON PE 60987
STRUCTURAL ENGINEERING AND INSPECTIONS, INC. EB 9196
16105 N. FLORIDA AVE. STE B, LUTZ, FL 33549

Job	Truss	Truss Type	Qty	Ply	ADAMS FRAMING - LOT 10 WISE ESTATES
L230379	T09	SPECIAL	1	1	Job Reference (optional)

Builders FirstSource, Lake City, Fl 32055 — 6.300 s Apr 19 2006 MiTek Industries, Inc. Mon Mar 12 13:29:12 2007 Page 1

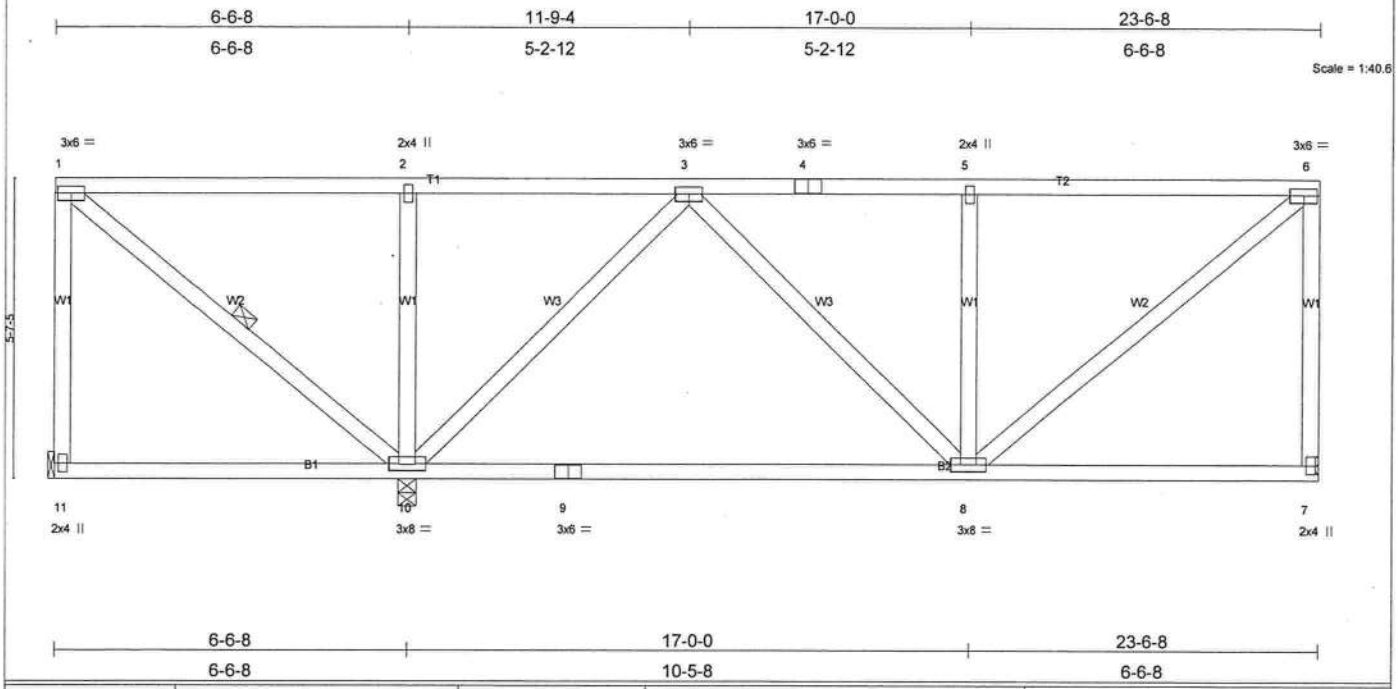

LOADING (psf)		SPACING	2-0-0	CSI		DEFL	in	(loc)	l/defl	L/d	PLATES	GRIP
TCLL	20.0	Plates Increase	1.25	TC	0.61	Vert(LL)	-0.21	8-10	>943	240	MT20	244/190
TCDL	7.0	Lumber Increase	1.25	BC	0.46	Vert(TL)	-0.37	8-10	>544	180		
BCLL	10.0	Rep Stress Incr	YES	WB	0.64	Horz(TL)	0.01	7	n/a	n/a		
BCDL	5.0	Code FBC2004/TPI2002		(Matrix)							Weight: 145 lb	

LUMBER
TOP CHORD 2 X 4 SYP No.2
BOT CHORD 2 X 4 SYP No.2
WEBS 2 X 4 SYP No.3

BRACING
TOP CHORD Structural wood sheathing directly applied or 6-0-0 oc purlins, except end verticals.
BOT CHORD Rigid ceiling directly applied or 10-0-0 oc bracing.
WEBS 1 Row at midpt 1-10

REACTIONS (lb/size) 11=70/Mechanical, 7=632/Mechanical, 10=1251/0-4-0
Max Uplift11=-31(load case 3), 7=-240(load case 3), 10=-466(load case 3)

FORCES (lb) - Maximum Compression/Maximum Tension
TOP CHORD 1-11=-4/41, 1-2=-69/159, 2-3=-69/159, 3-4=-513/181, 4-5=-513/181, 5-6=-513/181, 6-7=-563/249
BOT CHORD 10-11=-15/27, 9-10=-141/299, 8-9=-141/299, 7-8=-17/31
WEBS 1-10=-242/109, 2-10=-346/242, 3-10=-653/299, 3-8=-58/305, 5-8=-340/240, 6-8=-214/627

JOINT STRESS INDEX
1 = 0.66, 2 = 0.34, 3 = 0.37, 4 = 0.19, 5 = 0.34, 6 = 0.66, 7 = 0.56, 8 = 0.61, 9 = 0.40, 10 = 0.61 and 11 = 0.56

NOTES
1) Wind: ASCE 7-02; 110mph (3-second gust); h=20ft; TCDL=4.2psf; BCDL=3.0psf; Category II; Exp B; enclosed; MWFRS gable end zone and C-C Interior(1) zone; Lumber DOL=1.60 plate grip DOL=1.60. This truss is designed for C-C for members and forces, and for MWFRS for reactions specified.
2) Provide adequate drainage to prevent water ponding.
3) All bearings are assumed to be SYP No.2 crushing capacity of 565.00 psi
4) Provide mechanical connection (by others) of truss to bearing plate capable of withstanding 31 lb uplift at joint 11, 240 lb uplift at joint 7 and 466 lb uplift at joint 10.

LOAD CASE(S) Standard

MARCH 13,2007 TRUSS DESIGN ENGINEER:
THOMAS E. MILLER PE 56877, BYRON K. ANDERSON PE 60987
STRUCTURAL ENGINEERING AND INSPECTIONS, INC. EB 9196
16105 N. FLORIDA AVE. STE B, LUTZ, FL 33549

Job	Truss	Truss Type	Qty	Ply	ADAMS FRAMING - LOT 10 WISE ESTATES
L230379	T10	SPECIAL	1	1	Job Reference (optional)

Builders FirstSource, Lake City, Fl 32055 — 6.300 s Apr 19 2006 MiTek Industries, Inc. Mon Mar 12 13:29:59 2007 Page 1

6-6-8	14-3-1	18-9-1	23-6-8
6-6-8	7-8-9	4-5-15	4-9-7

Scale = 1:40.6

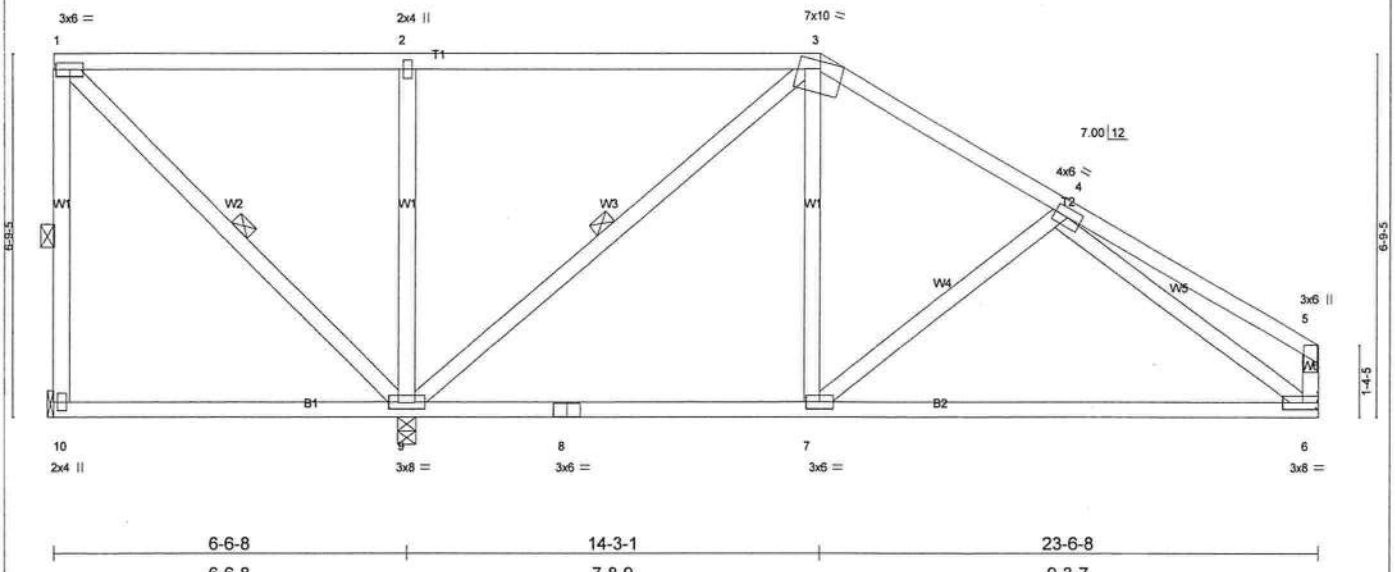

6-6-8	14-3-1	23-6-8
6-6-8	7-8-9	9-3-7

LOADING (psf)		SPACING	2-0-0	CSI		DEFL	in	(loc)	l/defl	L/d	PLATES	GRIP
TCLL	20.0	Plates Increase	1.25	TC	0.71	Vert(LL)	-0.11	6-7	>999	240	MT20	244/190
TCDL	7.0	Lumber Increase	1.25	BC	0.37	Vert(TL)	-0.20	6-7	>999	180		
BCLL	10.0	Rep Stress Incr	YES	WB	0.31	Horz(TL)	0.01	6	n/a	n/a		
BCDL	5.0	Code FBC2004/TPI2002		(Matrix)							Weight: 145 lb	

LUMBER
TOP CHORD 2 X 4 SYP No.2
BOT CHORD 2 X 4 SYP No.2
WEBS 2 X 4 SYP No.3

BRACING
TOP CHORD Structural wood sheathing directly applied or 6-0-0 oc purlins, except end verticals.
BOT CHORD Rigid ceiling directly applied or 10-0-0 oc bracing.
WEBS 1 Row at midpt 1-10, 1-9, 3-9

REACTIONS (lb/size) 10=140/Mechanical, 9=1154/0-4-0, 6=659/Mechanical
Max Horz 10=-247(load case 6)
Max Uplift10=-81(load case 4), 9=-392(load case 3), 6=-184(load case 6)

FORCES (lb) - Maximum Compression/Maximum Tension
TOP CHORD 1-10=-54/95, 1-2=-12/65, 2-3=-12/66, 3-4=-561/177, 4-5=-394/113, 5-6=-298/133
BOT CHORD 9-10=-30/242, 8-9=-49/451, 7-8=-49/451, 6-7=-124/545
WEBS 1-9=-125/31, 2-9=-420/368, 3-9=-674/266, 3-7=-75/338, 4-7=-129/207, 4-6=-342/121

JOINT STRESS INDEX
1 = 0.44, 2 = 0.34, 3 = 0.70, 4 = 0.29, 5 = 0.37, 6 = 0.71, 7 = 0.35, 8 = 0.27, 9 = 0.57 and 10 = 0.64

NOTES
1) Wind: ASCE 7-02; 110mph (3-second gust); h=20ft; TCDL=4.2psf; BCDL=3.0psf; Category II; Exp B; enclosed; MWFRS gable end zone and C-C Interior(1) zone; Lumber DOL=1.60 plate grip DOL=1.60. This truss is designed for C-C for members and forces, and for MWFRS for reactions specified.
2) Provide adequate drainage to prevent water ponding.
3) All bearings are assumed to be SYP No.2 crushing capacity of 565.00 psi
4) Provide mechanical connection (by others) of truss to bearing plate capable of withstanding 81 lb uplift at joint 10, 392 lb uplift at joint 9 and 184 lb uplift at joint 6.

LOAD CASE(S) Standard

MARCH 13,2007 TRUSS DESIGN ENGINEER:
THOMAS E. MILLER PE 56877, BYRON K. ANDERSON PE 60987
STRUCTURAL ENGINEERING AND INSPECTIONS, INC. EB 9196
16105 N. FLORIDA AVE. STE B, LUTZ, FL 33549

Job	Truss	Truss Type	Qty	Ply	ADAMS FRAMING - LOT 10 WISE ESTATES
L230379	T11	SPECIAL	1	1	Job Reference (optional)

Builders FirstSource, Lake City, Fl 32055 — 6.300 s Apr 19 2006 MiTek Industries, Inc. Mon Mar 12 13:30:33 2007 Page 1

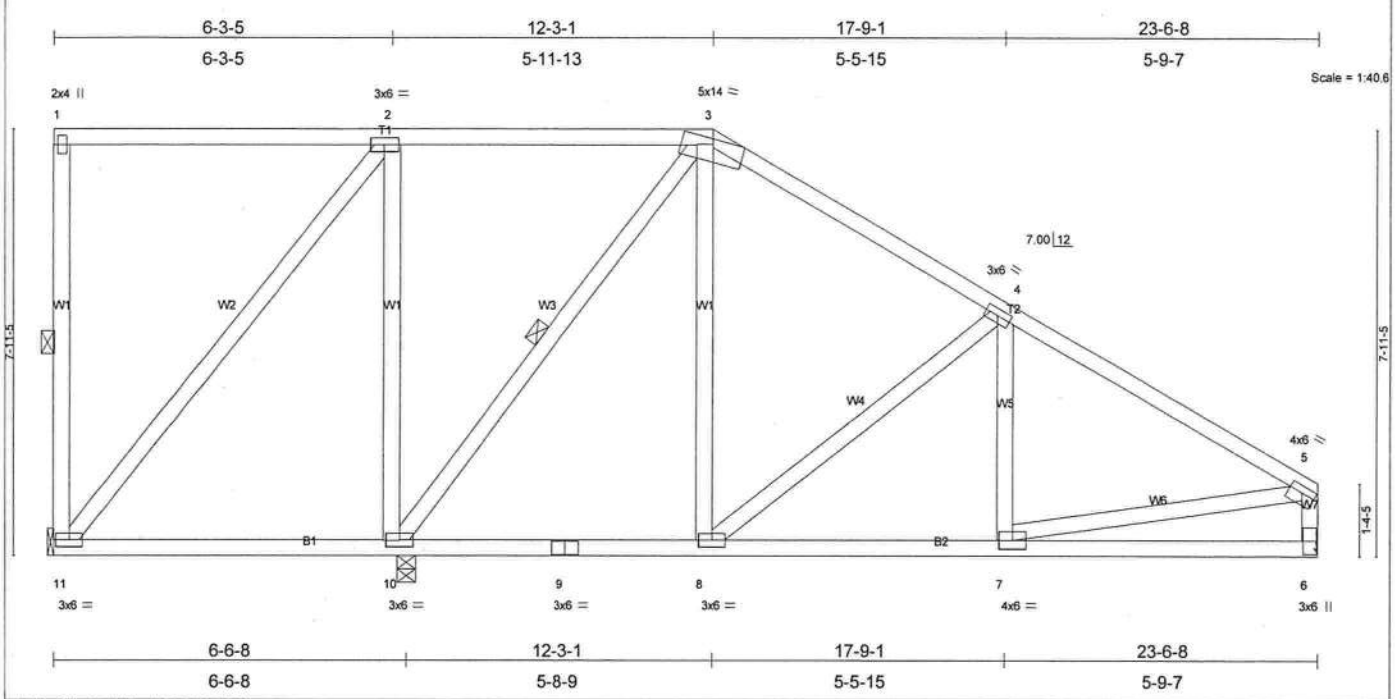

Plate Offsets (X,Y): [5:0-3-0,0-1-8]

LOADING (psf)		SPACING	2-0-0	CSI		DEFL	in	(loc)	l/defl	L/d	PLATES	GRIP
TCLL	20.0	Plates Increase	1.25	TC	0.46	Vert(LL)	-0.03	7-8	>999	240	MT20	244/190
TCDL	7.0	Lumber Increase	1.25	BC	0.21	Vert(TL)	-0.05	7-8	>999	180		
BCLL	10.0	Rep Stress Incr	YES	WB	0.43	Horz(TL)	0.01	6	n/a	n/a		
BCDL	5.0	Code FBC2004/TPI2002		(Matrix)							Weight: 159 lb	

LUMBER
TOP CHORD 2 X 4 SYP No.2
BOT CHORD 2 X 4 SYP No.2
WEBS 2 X 4 SYP No.3

BRACING
TOP CHORD Structural wood sheathing directly applied or 6-0-0 oc purlins, except end verticals.
BOT CHORD Rigid ceiling directly applied or 10-0-0 oc bracing, Except:
6-0-0 oc bracing: 10-11.
WEBS 1 Row at midpt 1-11, 3-10

REACTIONS (lb/size) 11=177/Mechanical, 10=1086/0-4-0, 6=690/Mechanical
Max Horz 11=-301(load case 6)
Max Uplift11=-171(load case 4), 10=-253(load case 3), 6=-205(load case 6)

FORCES (lb) - Maximum Compression/Maximum Tension
TOP CHORD 1-11=-147/119, 1-2=-18/8, 2-3=0/67, 3-4=-476/187, 4-5=-801/235, 5-6=-603/218
BOT CHORD 10-11=-84/238, 9-10=-58/354, 8-9=-58/354, 7-8=-120/625, 6-7=-99/194
WEBS 2-11=0/96, 2-10=-409/259, 3-10=-615/261, 3-8=-124/386, 4-8=-354/253, 4-7=0/80, 5-7=-22/440

JOINT STRESS INDEX
1 = 0.83, 2 = 0.40, 3 = 0.82, 4 = 0.42, 5 = 0.79, 6 = 0.30, 7 = 0.28, 8 = 0.35, 9 = 0.20, 10 = 0.41 and 11 = 0.40

NOTES
1) Wind: ASCE 7-02; 110mph (3-second gust); h=20ft; TCDL=4.2psf; BCDL=3.0psf; Category II; Exp B; enclosed; MWFRS gable end zone and C-C Interior(1) zone; Lumber DOL=1.60 plate grip DOL=1.60. This truss is designed for C-C for members and forces, and for MWFRS for reactions specified.
2) Provide adequate drainage to prevent water ponding.
3) All bearings are assumed to be SYP No.2 crushing capacity of 565.00 psi
4) Provide mechanical connection (by others) of truss to bearing plate capable of withstanding 171 lb uplift at joint 11, 253 lb uplift at joint 10 and 205 lb uplift at joint 6.

LOAD CASE(S) Standard

MARCH 13,2007 TRUSS DESIGN ENGINEER:
THOMAS E. MILLER PE 56877, BYRON K. ANDERSON PE 60987
STRUCTURAL ENGINEERING AND INSPECTIONS, INC. EB 9196
16105 N. FLORIDA AVE. STE B, LUTZ, FL 33549

Job	Truss	Truss Type	Qty	Ply	ADAMS FRAMING - LOT 10 WISE ESTATES
TEMP	T12	SPECIAL	1	1	Job Reference (optional)

Builders FirstSource, Lake City, Fl 32055 — 6.300 s Apr 19 2006 MiTek Industries, Inc. Mon Mar 12 13:37:38 2007 Page 1

-1-6-0	6-10-8	13-3-7	18-0-0	21-8-9	28-2-9	35-0-0
1-6-0	6-10-8	6-4-15	4-8-9	3-8-9	6-5-15	6-9-7

Scale: 3/16"=1'

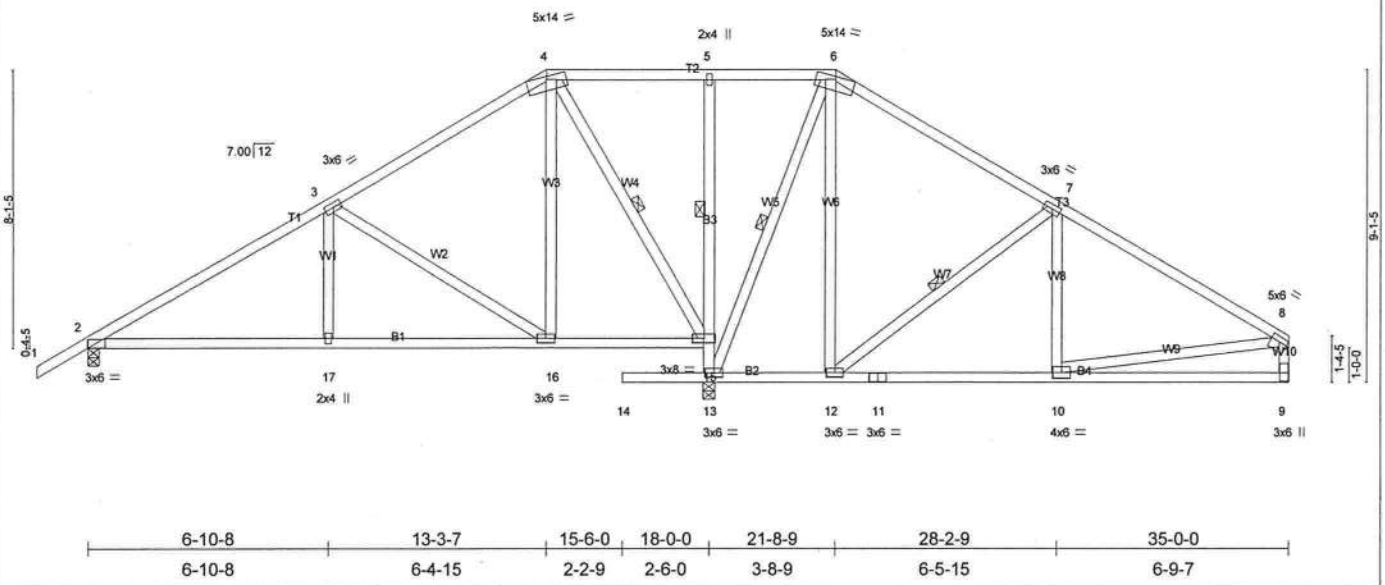

6-10-8	13-3-7	15-6-0	18-0-0	21-8-9	28-2-9	35-0-0
6-10-8	6-4-15	2-2-9	2-6-0	3-8-9	6-5-15	6-9-7

Plate Offsets (X,Y): [2:0-3-3,0-1-8], [8:Edge,0-1-12]

LOADING (psf)		SPACING	2-0-0	CSI		DEFL	in	(loc)	l/defl	L/d	PLATES	GRIP
TCLL	20.0	Plates Increase	1.25	TC	0.59	Vert(LL)	-0.08	2-17	>999	240	MT20	244/190
TCDL	7.0	Lumber Increase	1.25	BC	0.40	Vert(TL)	-0.13	2-17	>999	180		
BCLL	10.0	Rep Stress Incr	YES	WB	0.62	Horz(TL)	0.01	13	n/a	n/a		
BCDL	5.0	Code FBC2004/TPI2002		(Matrix)							Weight: 226 lb	

LUMBER
TOP CHORD 2 X 4 SYP No.2
BOT CHORD 2 X 4 SYP No.2 *Except*
B3 2 X 4 SYP No.3
WEBS 2 X 4 SYP No.3

BRACING
TOP CHORD Structural wood sheathing directly applied or 6-0-0 oc purlins, except end verticals.
BOT CHORD Rigid ceiling directly applied or 10-0-0 oc bracing. Except:
1 Row at midpt 5-15
WEBS 1 Row at midpt 4-15, 6-13, 7-12
JOINTS 1 Brace at Jt(s): 15

REACTIONS (lb/size) 2=738/0-4-0, 13=1749/0-4-0, 9=591/Mechanical
Max Horz 2=290(load case 4)
Max Uplift2=-360(load case 5), 13=-355(load case 5), 9=-293(load case 6)
Max Grav 2=746(load case 9), 13=1749(load case 1), 9=617(load case 10)

FORCES (lb) - Maximum Compression/Maximum Tension
TOP CHORD 1-2=0/40, 2-3=-892/349, 3-4=-309/282, 4-5=-29/251, 5-6=-29/254, 6-7=-228/310, 7-8=-682/363, 8-9=-518/308
BOT CHORD 2-17=-309/692, 16-17=-309/692, 15-16=-130/194, 13-15=-952/422, 5-15=-225/216, 13-14=0/0, 12-13=-26/123, 11-12=-216/513, 10-11=-216/513, 9-10=-140/248
WEBS 3-17=0/236, 3-16=-595/331, 4-16=-123/462, 4-15=-773/250, 6-13=-777/221, 6-12=-162/477, 7-12=-502/291, 7-10=0/195, 8-10=-77/269

JOINT STRESS INDEX
2 = 0.41, 3 = 0.42, 4 = 0.86, 5 = 0.34, 6 = 0.83, 7 = 0.42, 8 = 0.81, 9 = 0.36, 10 = 0.27, 11 = 0.22, 12 = 0.35, 13 = 0.71, 15 = 0.69, 16 = 0.35 and 17 = 0.34

NOTES
1) Unbalanced roof live loads have been considered for this design.
2) Wind: ASCE 7-02; 110mph (3-second gust); h=20ft; TCDL=4.2psf; BCDL=3.0psf; Category II; Exp B; enclosed; MWFRS gable end zone and C-C Interior(1) zone; Lumber DOL=1.60 plate grip DOL=1.60. This truss is designed for C-C for members and forces, and for MWFRS for reactions specified.
3) Provide adequate drainage to prevent water ponding.
4) All bearings are assumed to be SYP No.2 crushing capacity of 565.00 psi
5) Provide mechanical connection (by others) of truss to bearing plate capable of withstanding 360 lb uplift at joint 2, 355 lb uplift at joint 13 and 293 lb uplift at joint 9.

LOAD CASE(S) Standard

MARCH 13,2007 TRUSS DESIGN ENGINEER:
THOMAS E. MILLER PE 56877, BYRON K. ANDERSON PE 60987
STRUCTURAL ENGINEERING AND INSPECTIONS, INC. EB 9196
16105 N. FLORIDA AVE. STE B, LUTZ, FL 33549

Job	Truss	Truss Type	Qty	Ply	ADAMS FRAMING - LOT 10 WISE ESTATES
L230379	T13	SPECIAL	2	1	Job Reference (optional)

Builders FirstSource, Lake City, Fl 32055 — 6.300 s Apr 19 2006 MiTek Industries, Inc. Mon Mar 12 13:37:56 2007 Page 1

1-6-0	7-10-8	15-3-7	19-8-9	27-2-9	35-0-0
1-6-0	7-10-8	7-4-15	4-5-2	7-5-15	7-9-7

Scale: 3/16"=1'

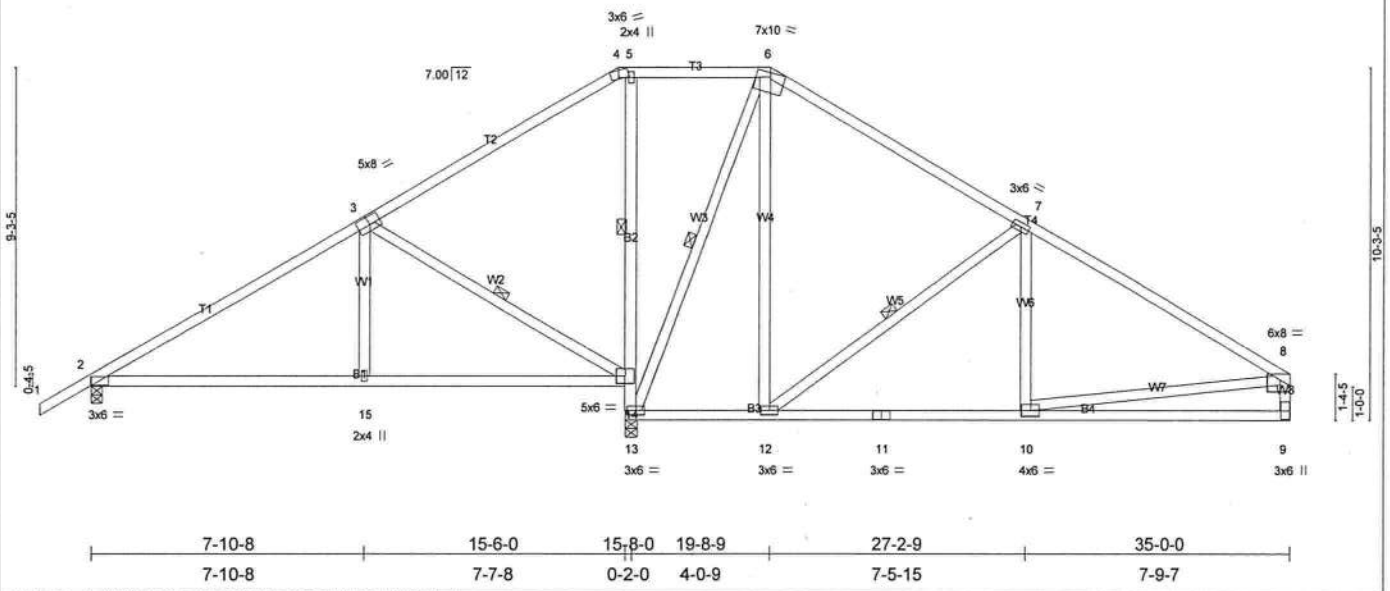

7-10-8	15-6-0	15-8-0	19-8-9	27-2-9	35-0-0
7-10-8	7-7-8	0-2-0	4-0-9	7-5-15	7-9-7

Plate Offsets (X,Y): [2:0-3-3,0-1-8], [3:0-4-0,0-3-0], [8:0-3-8,Edge]

LOADING (psf)		SPACING	2-0-0	CSI		DEFL	in	(loc)	l/defl	L/d	PLATES	GRIP
TCLL	20.0	Plates Increase	1.25	TC	0.79	Vert(LL)	-0.12	2-15	>999	240	MT20	244/190
TCDL	7.0	Lumber Increase	1.25	BC	0.45	Vert(TL)	-0.20	2-15	>915	180		
BCLL	10.0	Rep Stress Incr	YES	WB	0.45	Horz(TL)	0.02	13	n/a	n/a		
BCDL	5.0	Code FBC2004/TPI2002		(Matrix)							Weight: 212 lb	

LUMBER
TOP CHORD 2 X 4 SYP No.2
BOT CHORD 2 X 4 SYP No.2 *Except*
B2 2 X 4 SYP No.3
WEBS 2 X 4 SYP No.3

BRACING
TOP CHORD Structural wood sheathing directly applied or 6-0-0 oc purlins, except end verticals.
BOT CHORD Rigid ceiling directly applied or 10-0-0 oc bracing, Except:
5-7-6 oc bracing: 13-14.
1 Row at midpt 5-14
WEBS 1 Row at midpt 3-14, 6-13, 7-12

REACTIONS (lb/size) 2=642/0-4-0, 13=1637/0-4-0, 9=724/Mechanical
Max Horz 2=330(load case 4)
Max Uplift2=-361(load case 5), 13=-346(load case 5), 9=-350(load case 6)
Max Grav 2=650(load case 9), 13=1637(load case 1), 9=729(load case 10)

FORCES (lb) - Maximum Compression/Maximum Tension
TOP CHORD 1-2=0/40, 2-3=-658/377, 3-4=-71/320, 4-5=0/326, 5-6=0/326, 6-7=-299/379, 7-8=-835/449, 8-9=-616/368
BOT CHORD 2-15=-300/483, 14-15=-300/479, 13-14=-883/345, 5-14=-407/251, 12-13=-6/173, 11-12=-275/634, 10-11=-275/634, 9-10=-185/330
WEBS 3-15=0/269, 3-14=-707/390, 6-13=-842/223, 6-12=-182/549, 7-12=-585/341, 7-10=0/219, 8-10=-90/308

JOINT STRESS INDEX
2 = 0.59, 3 = 0.80, 4 = 0.62, 5 = 0.62, 6 = 0.66, 7 = 0.42, 8 = 0.55, 9 = 0.48, 10 = 0.27, 11 = 0.40, 12 = 0.36, 13 = 0.51, 14 = 0.76 and 15 = 0.34

NOTES
1) Unbalanced roof live loads have been considered for this design.
2) Wind: ASCE 7-02; 110mph (3-second gust); h=20ft; TCDL=4.2psf; BCDL=3.0psf; Category II; Exp B; enclosed; MWFRS gable end zone and C-C Interior(1) zone; Lumber DOL=1.60 plate grip DOL=1.60. This truss is designed for C-C for members and forces, and for MWFRS for reactions specified.
3) Provide adequate drainage to prevent water ponding.
4) All bearings are assumed to be SYP No.2 crushing capacity of 565.00 psi
5) Provide mechanical connection (by others) of truss to bearing plate capable of withstanding 361 lb uplift at joint 2, 346 lb uplift at joint 13 and 350 lb uplift at joint 9.

LOAD CASE(S) Standard

MARCH 13,2007 TRUSS DESIGN ENGINEER:
THOMAS E. MILLER PE 56877, BYRON K. ANDERSON PE 60987
STRUCTURAL ENGINEERING AND INSPECTIONS, INC. EB 9196
16105 N. FLORIDA AVE. STE B, LUTZ, FL 33549

Job	Truss	Truss Type	Qty	Ply	ADAMS FRAMING - LOT 10 WISE ESTATES
L230379	T14	MONO HIP	1	1	Job Reference (optional)

Builders FirstSource, Lake City, Fl 32055 — 6.300 s Apr 19 2006 MiTek Industries, Inc. Mon Mar 12 13:40:12 2007 Page 1

-1-6-0	7-0-0	12-6-8	18-1-0	23-7-8	29-2-0	35-0-0
1-6-0	7-0-0	5-6-8	5-6-8	5-6-8	5-6-8	5-10-0

Scale = 1:62.7

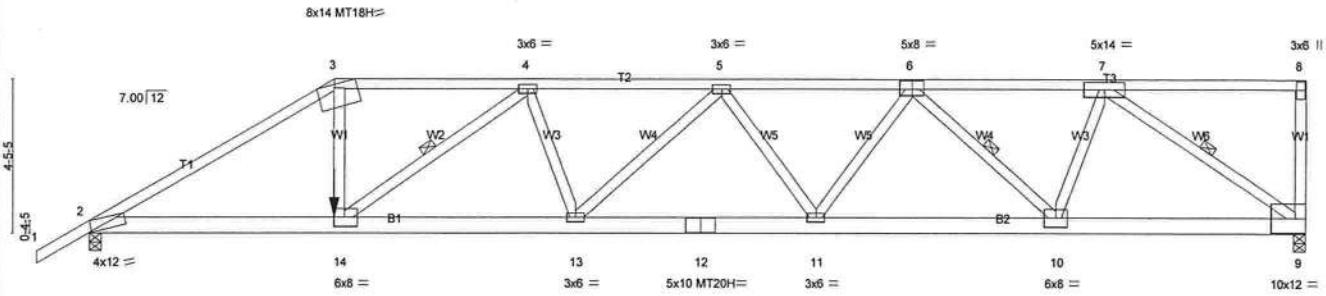

7-0-0	13-11-2	20-10-4	27-9-6	35-0-0
7-0-0	6-11-2	6-11-2	6-11-2	7-2-10

Plate Offsets (X,Y): [2:0-0-15,Edge], [3:0-6-1,Edge], [6:0-4-0,0-3-0], [14:0-3-8,0-3-0]

LOADING (psf)		SPACING 2-0-0		CSI		DEFL	in	(loc)	l/defl	L/d	PLATES	GRIP
TCLL	20.0	Plates Increase	1.25	TC	0.94	Vert(LL)	-0.46	11-13	>904	240	MT20	244/190
TCDL	7.0	Lumber Increase	1.25	BC	0.82	Vert(TL)	-0.74	11-13	>563	180	MT20H	187/143
BCLL	10.0	Rep Stress Incr	NO	WB	0.95	Horz(TL)	0.18	9	n/a	n/a	MT18H	244/190
BCDL	5.0	Code FBC2004/TPI2002		(Matrix)							Weight: 211 lb	

LUMBER
TOP CHORD 2 X 4 SYP No.2
BOT CHORD 2 X 6 SYP No.1D
WEBS 2 X 4 SYP No.3 *Except*
W6 2 X 4 SYP No.2

BRACING
TOP CHORD Structural wood sheathing directly applied, except end verticals.
BOT CHORD Rigid ceiling directly applied or 4-2-7 oc bracing.
WEBS 1 Row at midpt 4-14, 6-10, 7-9

REACTIONS (lb/size) 9=3196/0-4-0, 2=3071/0-4-0
Max Horz 2=247(load case 4)
Max Uplift9=-1860(load case 2), 2=-1539(load case 4)

FORCES (lb) - Maximum Compression/Maximum Tension
TOP CHORD 1-2=0/43, 2-3=-5443/2850, 3-4=-4687/2539, 4-5=-6673/3735, 5-6=-6613/3738, 6-7=-4479/2532, 7-8=-107/73, 8-9=-320/320
BOT CHORD 2-14=-2501/4607, 13-14=-3674/6442, 12-13=-4006/6903, 11-12=-4006/6903, 10-11=-3526/6021, 9-10=-2245/3808
WEBS 3-14=-1167/2206, 4-14=-2199/1497, 4-13=-190/718, 5-13=-321/379, 5-11=-514/483, 6-11=-385/1052, 6-10=-2158/1391, 7-10=-890/2081, 7-9=-4550/2670

JOINT STRESS INDEX
2 = 0.85, 3 = 0.94, 4 = 0.69, 5 = 0.41, 6 = 0.91, 7 = 0.99, 8 = 0.69, 9 = 0.78, 10 = 0.79, 11 = 0.76, 12 = 0.98, 13 = 0.66 and 14 = 0.61

NOTES
1) Wind: ASCE 7-02; 110mph (3-second gust); h=20ft; TCDL=4.2psf; BCDL=3.0psf; Category II; Exp B; enclosed; MWFRS gable end zone; Lumber DOL=1.60 plate grip DOL=1.60.
2) Provide adequate drainage to prevent water ponding.
3) All plates are MT20 plates unless otherwise indicated.
4) All bearings are assumed to be SYP No.2 crushing capacity of 565.00 psi
5) Provide mechanical connection (by others) of truss to bearing plate capable of withstanding 1860 lb uplift at joint 9 and 1539 lb uplift at joint 2.
6) Girder carries hip end with 0-0-0 right side setback, 7-0-0 left side setback, and 7-0-0 end setback.
7) Hanger(s) or other connection device(s) shall be provided sufficient to support concentrated load(s) 539 lb down and 374 lb up at 7-0-0 on bottom chord. The design/selection of such connection device(s) is the responsibility of others.
8) In the LOAD CASE(S) section, loads applied to the face of the truss are noted as front (F) or back (B).

LOAD CASE(S) Standard
1) Regular: Lumber Increase=1.25, Plate Increase=1.25
Uniform Loads (plf)
Vert: 1-3=-54, 3-8=-117(F=-63), 2-14=-30, 9-14=-65(F=-35)
Concentrated Loads (lb)
Vert: 14=-539(F)

~~MARCH 13,2007 TRUSS DESIGN ENGINEER:~~
THOMAS E. MILLER PE 56877, BYRON K. ANDERSON PE 60987
STRUCTURAL ENGINEERING AND INSPECTIONS, INC. EB 9196
16105 N. FLORIDA AVE. STE B, LUTZ, FL 33549

Dwg.#0313071030

Job	Truss	Truss Type	Qty	Ply	ADAMS FRAMING - LOT 10 WISE ESTATES
L230379	T15	MONO HIP	1	1	Job Reference (optional)

Builders FirstSource, Lake City, Fl 32055 — 6.300 s Apr 19 2006 MiTek Industries, Inc. Mon Mar 12 13:40:58 2007 Page 1

-1-6-0	4-8-13	9-0-0	15-5-2	21-10-4	28-3-6	35-0-0
1-6-0	4-8-13	4-3-3	6-5-2	6-5-2	6-5-2	6-8-10

Scale = 1:62.7

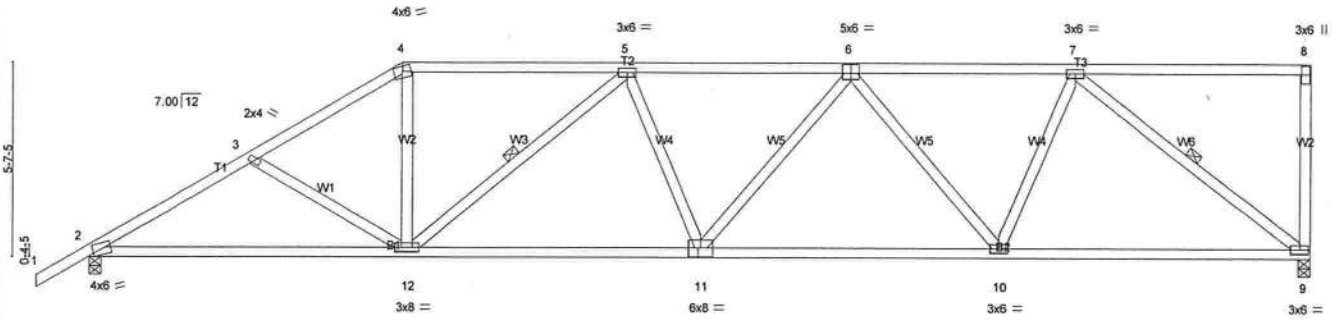

9-0-0	17-6-13	26-1-11	35-0-0
9-0-0	8-6-13	8-6-13	8-10-5

Plate Offsets (X,Y): [2:0-1-14,0-0-11], [6:0-3-0,0-3-0], [11:0-3-1,0-3-5]

LOADING (psf)		SPACING 2-0-0		CSI		DEFL	in	(loc)	l/defl	L/d	PLATES	GRIP
TCLL	20.0	Plates Increase	1.25	TC	0.55	Vert(LL)	-0.22	10-11	>999	240	MT20	244/190
TCDL	7.0	Lumber Increase	1.25	BC	0.67	Vert(TL)	-0.36	10-11	>999	180		
BCLL	10.0	Rep Stress Incr	YES	WB	0.66	Horz(TL)	0.11	9	n/a	n/a		
BCDL	5.0	Code FBC2004/TPI2002		(Matrix)							Weight: 191 lb	

LUMBER
TOP CHORD 2 X 4 SYP No.2
BOT CHORD 2 X 4 SYP No.2
WEBS 2 X 4 SYP No.3

BRACING
TOP CHORD Structural wood sheathing directly applied or 3-9-3 oc purlins, except end verticals.
BOT CHORD Rigid ceiling directly applied or 6-6-11 oc bracing.
WEBS 1 Row at midpt 5-12, 7-9

REACTIONS (lb/size) 9=1455/0-4-0, 2=1549/0-4-0
Max Horz 2=299(load case 5)
Max Uplift9=-624(load case 3), 2=-493(load case 5)

FORCES (lb) - Maximum Compression/Maximum Tension
TOP CHORD 1-2=0/40, 2-3=-2405/709, 3-4=-2204/693, 4-5=-1878/637, 5-6=-2387/893, 6-7=-1810/720, 7-8=-54/16, 8-9=-169/136
BOT CHORD 2-12=-715/2018, 11-12=-898/2363, 10-11=-921/2235, 9-10=-644/1489
WEBS 3-12=-188/202, 4-12=-178/784, 5-12=-636/464, 5-11=0/88, 6-11=-44/241, 6-10=-678/320, 7-10=-204/859, 7-9=-1845/807

JOINT STRESS INDEX
2 = 0.86, 3 = 0.34, 4 = 0.66, 5 = 0.48, 6 = 0.50, 7 = 0.76, 8 = 0.41, 9 = 0.74, 10 = 0.76, 11 = 0.74 and 12 = 0.57

NOTES
1) Wind: ASCE 7-02; 110mph (3-second gust); h=20ft; TCDL=4.2psf; BCDL=3.0psf; Category II; Exp B; enclosed; MWFRS gable end zone and C-C Interior(1) zone; Lumber DOL=1.60 plate grip DOL=1.60. This truss is designed for C-C for members and forces, and for MWFRS for reactions specified.
2) Provide adequate drainage to prevent water ponding.
3) All bearings are assumed to be SYP No.2 crushing capacity of 565.00 psi
4) Provide mechanical connection (by others) of truss to bearing plate capable of withstanding 624 lb uplift at joint 9 and 493 lb uplift at joint 2.

LOAD CASE(S) Standard

MARCH 13,2007 TRUSS DESIGN ENGINEER:
THOMAS E. MILLER PE 56877, BYRON K. ANDERSON PE 60987
STRUCTURAL ENGINEERING AND INSPECTIONS, INC. EB 9196
16105 N. FLORIDA AVE. STE B, LUTZ, FL 33549

Dwg.#0313071031

Job	Truss	Truss Type	Qty	Ply	ADAMS FRAMING - LOT 10 WISE ESTATES
L230379	T16	HIP	1	1	Job Reference (optional)

Builders FirstSource, Lake City, Fl 32055 — 6.300 s Apr 19 2006 MiTek Industries, Inc. Mon Mar 12 13:41:33 2007 Page 1

-1-6-0	5-8-13	11-0-0	18-4-5	25-8-9	30-2-9	35-0-0
1-6-0	5-8-13	5-3-3	7-4-5	7-4-5	4-5-15	4-9-7

Scale = 1:62.7

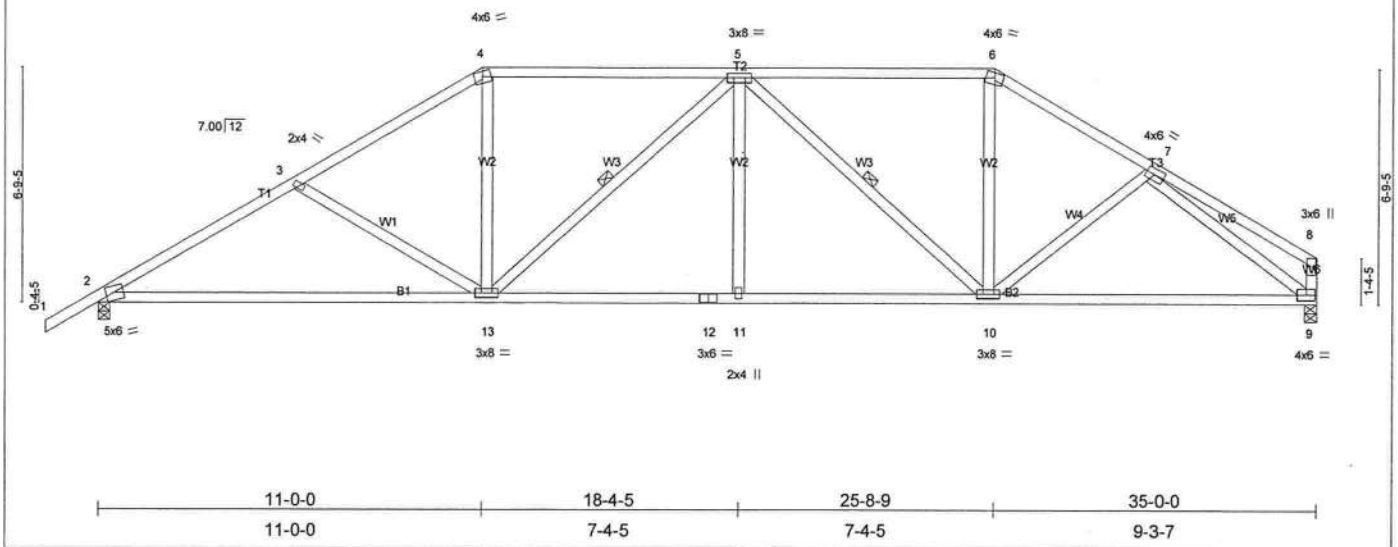

11-0-0	18-4-5	25-8-9	35-0-0
11-0-0	7-4-5	7-4-5	9-3-7

Plate Offsets (X,Y): [2:0-3-6,Edge]

LOADING (psf)		SPACING	2-0-0	CSI		DEFL	in	(loc)	l/defl	L/d	PLATES	GRIP
TCLL	20.0	Plates Increase	1.25	TC	0.76	Vert(LL)	-0.37	2-13	>999	240	MT20	244/190
TCDL	7.0	Lumber Increase	1.25	BC	0.85	Vert(TL)	-0.64	2-13	>651	180		
BCLL	10.0	Rep Stress Incr	YES	WB	0.94	Horz(TL)	0.10	9	n/a	n/a		
BCDL	5.0	Code FBC2004/TPI2002		(Matrix)							Weight: 195 lb	

LUMBER
TOP CHORD 2 X 4 SYP No.2
BOT CHORD 2 X 4 SYP No.2
WEBS 2 X 4 SYP No.3

BRACING
TOP CHORD Structural wood sheathing directly applied or 3-5-13 oc purlins, except end verticals.
BOT CHORD Rigid ceiling directly applied or 7-3-6 oc bracing.
WEBS 1 Row at midpt 5-13, 5-10

REACTIONS (lb/size) 2=1549/0-4-0, 9=1455/0-4-0
Max Horz 2=239(load case 4)
Max Uplift2=-523(load case 5), 9=-410(load case 6)

FORCES (lb) - Maximum Compression/Maximum Tension
TOP CHORD 1-2=0/40, 2-3=-2351/695, 3-4=-2078/651, 4-5=-1747/610, 5-6=-1580/556, 6-7=-1863/588, 7-8=-455/130, 8-9=-338/145
BOT CHORD 2-13=-749/1977, 12-13=-719/1990, 11-12=-719/1990, 10-11=-719/1990, 9-10=-414/1497
WEBS 3-13=-288/268, 4-13=-115/673, 5-13=-439/344, 5-11=0/174, 5-10=-631/376, 6-10=-107/571, 7-10=-181/219, 7-9=-1520/494

JOINT STRESS INDEX
2 = 0.85, 3 = 0.34, 4 = 0.76, 5 = 0.57, 6 = 0.76, 7 = 0.45, 8 = 0.48, 9 = 0.73, 10 = 0.57, 11 = 0.34, 12 = 0.68 and 13 = 0.57

NOTES
1) Unbalanced roof live loads have been considered for this design.
2) Wind: ASCE 7-02; 110mph (3-second gust); h=20ft; TCDL=4.2psf; BCDL=3.0psf; Category II; Exp B; enclosed; MWFRS gable end zone and C-C Interior(1) zone; Lumber DOL=1.60 plate grip DOL=1.60. This truss is designed for C-C for members and forces, and for MWFRS for reactions specified.
3) Provide adequate drainage to prevent water ponding.
4) All bearings are assumed to be SYP No.2 crushing capacity of 565.00 psi
5) Provide mechanical connection (by others) of truss to bearing plate capable of withstanding 523 lb uplift at joint 2 and 410 lb uplift at joint 9.

LOAD CASE(S) Standard

MARCH 13,2007 TRUSS DESIGN ENGINEER:
THOMAS E. MILLER PE 56877, BYRON K. ANDERSON PE 60987
STRUCTURAL ENGINEERING AND INSPECTIONS, INC. EB 9196
16105 N. FLORIDA AVE. STE B, LUTZ, FL 33549

Job	Truss	Truss Type	Qty	Ply	ADAMS FRAMING - LOT 10 WISE ESTATES
L230379	T17	SPECIAL	1	1	Job Reference (optional)

Builders FirstSource, Lake City, Fl 32055 — 6.300 s Apr 19 2006 MiTek Industries, Inc. Tue Mar 13 08:55:04 2007 Page 1

2-8-9	7-10-5	13-0-0	16-4-0	23-8-9	29-0-1	35-0-0
2-8-9	5-1-11	5-1-11	3-4-0	7-4-9	5-3-8	5-11-15

Scale = 1:61.8

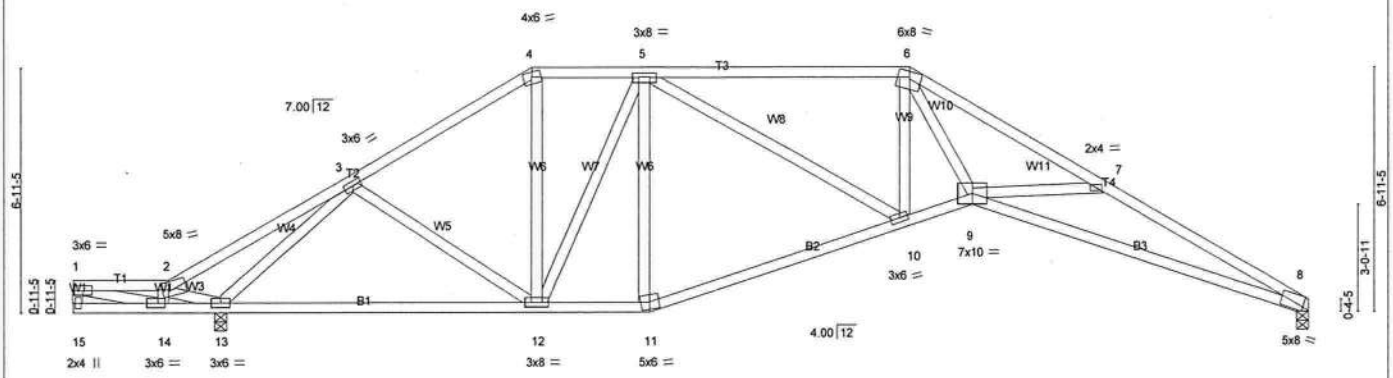

2-8-9	4-2-0	13-0-0	16-4-0	23-8-9	25-6-0	35-0-0
2-8-9	1-5-7	8-10-0	3-4-0	7-4-9	1-9-7	9-6-0

Plate Offsets (X,Y): [2:0-2-2,0-2-15], [8:0-2-2,Edge], [14:0-2-2,0-1-8]

LOADING (psf)		SPACING 2-0-0		CSI		DEFL	in	(loc)	l/defl	L/d	PLATES	GRIP
TCLL	20.0	Plates Increase	1.25	TC	0.70	Vert(LL)	-0.46	8-9	>809	240	MT20	244/190
TCDL	7.0	Lumber Increase	1.25	BC	0.93	Vert(TL)	-0.75	8-9	>493	180		
BCLL	10.0	Rep Stress Incr	YES	WB	0.92	Horz(TL)	0.36	8	n/a	n/a		
BCDL	5.0	Code FBC2004/TPI2002		(Matrix)							Weight: 193 lb	

LUMBER
TOP CHORD 2 X 4 SYP No.2
BOT CHORD 2 X 4 SYP No.2
WEBS 2 X 4 SYP No.3

BRACING
TOP CHORD Structural wood sheathing directly applied or 2-3-0 oc purlins, except end verticals.
BOT CHORD Rigid ceiling directly applied or 2-2-0 oc bracing.

REACTIONS (lb/size) 8=1266/0-4-0, 13=1648/0-4-0
Max Horz 13=-230(load case 3)
Max Uplift8=-384(load case 6), 13=-455(load case 5)

FORCES (lb) - Maximum Compression/Maximum Tension
TOP CHORD 1-15=-34/51, 1-2=-261/246, 2-3=-423/444, 3-4=-1440/424, 4-5=-1189/410, 5-6=-2184/638, 6-7=-3861/922, 7-8=-4238/1223
BOT CHORD 14-15=-14/18, 13-14=-238/302, 12-13=-437/992, 11-12=-474/1397, 10-11=-502/1501, 9-10=-531/2339, 8-9=-1016/3805
WEBS 1-14=-248/284, 2-14=-185/0, 2-13=-95/240, 3-13=-1842/822, 3-12=-231/277, 4-12=-163/545, 5-12=-565/369, 5-11=-321/182, 5-10=-219/918, 6-10=-611/191, 6-9=-478/2398, 7-9=-300/409

JOINT STRESS INDEX
1 = 0.35, 2 = 0.83, 3 = 0.61, 4 = 0.34, 5 = 0.87, 6 = 0.89, 7 = 0.34, 8 = 0.82, 9 = 0.71, 10 = 0.55, 11 = 0.60, 12 = 0.64, 13 = 0.57, 14 = 0.51 and 15 = 0.34

NOTES
1) Unbalanced roof live loads have been considered for this design.
2) Wind: ASCE 7-02; 110mph (3-second gust); h=20ft; TCDL=4.2psf; BCDL=3.0psf; Category II; Exp B; enclosed; MWFRS gable end zone and C-C Interior(1) zone; cantilever left exposed ; Lumber DOL=1.60 plate grip DOL=1.60. This truss is designed for C-C for members and forces, and for MWFRS for reactions specified.
3) Provide adequate drainage to prevent water ponding.
4) All bearings are assumed to be SYP No.2 crushing capacity of 565.00 psi
5) Bearing at joint(s) 8 considers parallel to grain value using ANSI/TPI 1 angle to grain formula. Building designer should verify capacity of bearing surface.
6) Provide mechanical connection (by others) of truss to bearing plate capable of withstanding 384 lb uplift at joint 8 and 455 lb uplift at joint 13.

LOAD CASE(S) Standard

MARCH 13,2007 TRUSS DESIGN ENGINEER:
THOMAS E. MILLER PE 56877, BYRON K. ANDERSON PE 60987
STRUCTURAL ENGINEERING AND INSPECTIONS, INC. EB 9196
16105 N. FLORIDA AVE. STE B, LUTZ, FL 33549

Job	Truss	Truss Type	Qty	Ply	ADAMS FRAMING - LOT 10 WISE ESTATES
L230379	T18	SPECIAL	1	1	Job Reference (optional)

Builders FirstSource, Lake City, Fl 32055 — 6.300 s Apr 19 2006 MiTek Industries, Inc. Mon Mar 12 15:07:41 2007 Page 1

2-6-1	4-8-9	10-3-0	15-0-0	21-8-9	28-0-1	35-0-0
2-6-1	2-2-9	5-6-7	4-9-0	6-8-9	6-3-8	6-11-15

Scale = 1:61.8

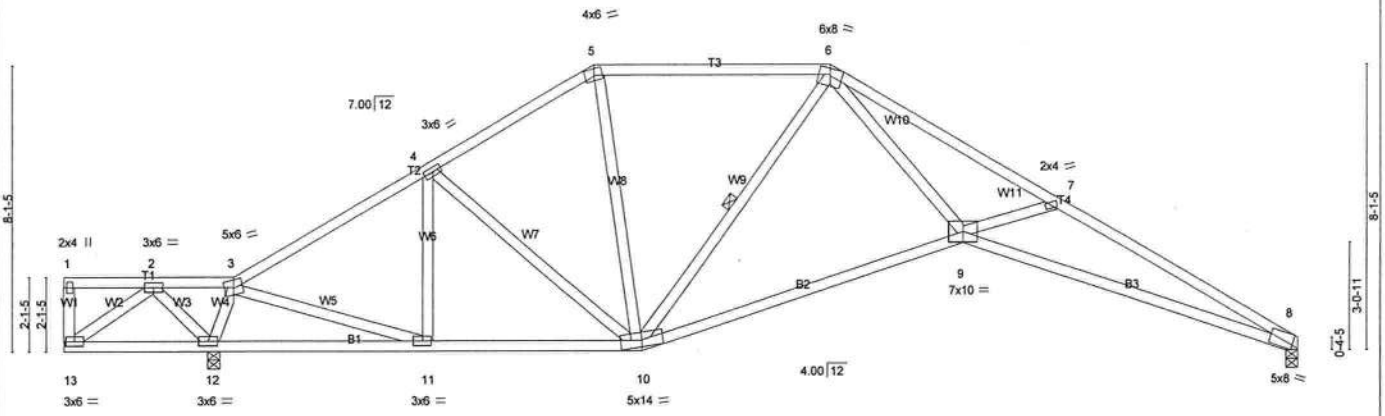

4-2-0	10-3-0	16-4-0	25-6-0	35-0-0
4-2-0	6-1-0	6-1-0	9-2-0	9-6-0

Plate Offsets (X,Y): [8:0-2-2,Edge]

LOADING (psf)		SPACING 2-0-0		CSI		DEFL	in	(loc)	l/defl	L/d	PLATES	GRIP
TCLL	20.0	Plates Increase	1.25	TC	0.94	Vert(LL)	-0.45	8-9	>813	240	MT20	244/190
TCDL	7.0	Lumber Increase	1.25	BC	0.93	Vert(TL)	-0.74	8-9	>498	180		
BCLL	10.0	Rep Stress Incr	YES	WB	0.88	Horz(TL)	0.38	8	n/a	n/a		
BCDL	5.0	Code FBC2004/TPI2002		(Matrix)							Weight: 188 lb	

LUMBER
TOP CHORD 2 X 4 SYP No.2
BOT CHORD 2 X 4 SYP No.2
WEBS 2 X 4 SYP No.3

BRACING
TOP CHORD Structural wood sheathing directly applied, except end verticals.
BOT CHORD Rigid ceiling directly applied or 2-2-0 oc bracing.
WEBS 1 Row at midpt 6-10

REACTIONS (lb/size) 8=1269/0-4-0, 12=1645/0-4-0
Max Horz 12=-266(load case 3)
Max Uplift8=-396(load case 6), 12=-454(load case 5)

FORCES (lb) - Maximum Compression/Maximum Tension
TOP CHORD 1-13=-68/48, 1-2=-15/35, 2-3=-305/273, 3-4=-1453/406, 4-5=-1362/455, 5-6=-1184/445, 6-7=-3891/1001, 7-8=-4264/1226
BOT CHORD 12-13=-122/129, 11-12=-251/527, 10-11=-361/1189, 9-10=-310/1713, 8-9=-1008/3830
WEBS 2-13=-207/173, 2-12=-228/301, 3-12=-1365/461, 3-11=-367/1084, 4-11=-176/157, 4-10=-234/71, 5-10=-105/347, 6-10=-731/238, 6-9=-595/2729, 7-9=-326/396

JOINT STRESS INDEX
1 = 0.34, 2 = 0.37, 3 = 0.66, 4 = 0.42, 5 = 0.87, 6 = 0.89, 7 = 0.34, 8 = 0.83, 9 = 0.81, 10 = 0.42, 11 = 0.61, 12 = 0.50 and 13 = 0.35

NOTES
1) Unbalanced roof live loads have been considered for this design.
2) Wind: ASCE 7-02; 110mph (3-second gust); h=20ft; TCDL=4.2psf; BCDL=3.0psf; Category II; Exp B; enclosed; MWFRS gable end zone and C-C Interior(1) zone; cantilever left exposed ; Lumber DOL=1.60 plate grip DOL=1.60. This truss is designed for C-C for members and forces, and for MWFRS for reactions specified.
3) Provide adequate drainage to prevent water ponding.
4) All bearings are assumed to be SYP No.2 crushing capacity of 565.00 psi
5) Bearing at joint(s) 8 considers parallel to grain value using ANSI/TPI 1 angle to grain formula. Building designer should verify capacity of bearing surface.
6) Provide mechanical connection (by others) of truss to bearing plate capable of withstanding 396 lb uplift at joint 8 and 454 lb uplift at joint 12.

LOAD CASE(S) Standard

MARCH 13,2007 TRUSS DESIGN ENGINEER:
THOMAS E. MILLER PE 56877, BYRON K. ANDERSON PE 60987
STRUCTURAL ENGINEERING AND INSPECTIONS, INC. EB 9196
16105 N. FLORIDA AVE. STE B, LUTZ, FL 33549

Job	Truss	Truss Type	Qty	Ply	ADAMS FRAMING - LOT 10 WISE ESTATES
L230379	T19	SPECIAL	1	1	Job Reference (optional)

Builders FirstSource, Lake City, Fl 32055 — 6.300 s Apr 19 2006 MiTek Industries, Inc. Mon Mar 12 15:07:49 2007 Page 1

6-8-9	11-10-5	17-0-0	19-8-9	25-6-0	29-10-13	35-0-0
6-8-9	5-1-11	5-1-11	2-8-9	5-9-7	4-4-13	5-1-3

Scale = 1:61.8

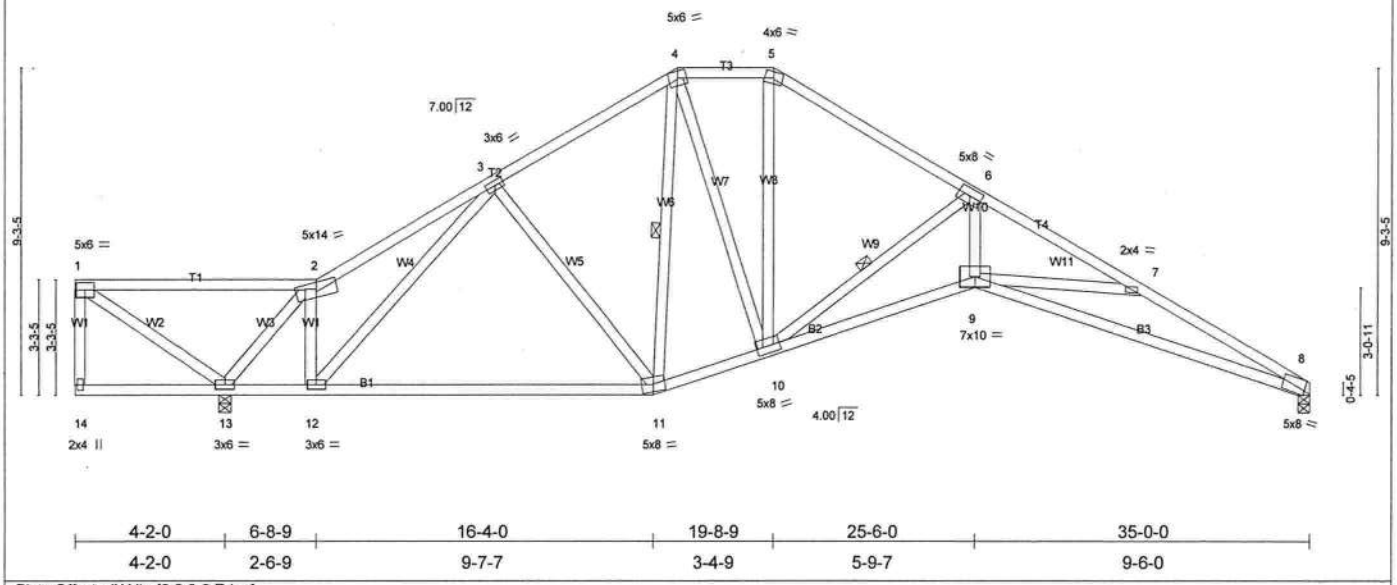

4-2-0	6-8-9	16-4-0	19-8-9	25-6-0	35-0-0
4-2-0	2-6-9	9-7-7	3-4-9	5-9-7	9-6-0

Plate Offsets (X,Y): [8:0-2-2,Edge]

LOADING (psf)		SPACING	2-0-0	CSI		DEFL	in	(loc)	l/defl	L/d	PLATES	GRIP
TCLL	20.0	Plates Increase	1.25	TC	0.57	Vert(LL)	-0.47	8-9	>782	240	MT20	244/190
TCDL	7.0	Lumber Increase	1.25	BC	0.92	Vert(TL)	-0.77	8-9	>478	180		
BCLL	10.0	Rep Stress Incr	YES	WB	0.81	Horz(TL)	0.42	8	n/a	n/a		
BCDL	5.0	Code FBC2004/TPI2002		(Matrix)							Weight: 211 lb	

LUMBER
TOP CHORD 2 X 4 SYP No.2
BOT CHORD 2 X 4 SYP No.2
WEBS 2 X 4 SYP No.3

BRACING
TOP CHORD Structural wood sheathing directly applied or 2-6-6 oc purlins, except end verticals.
BOT CHORD Rigid ceiling directly applied or 2-2-0 oc bracing.
WEBS 1 Row at midpt 4-11, 6-10

REACTIONS (lb/size) 8=1266/0-4-0, 13=1648/0-4-0
Max Horz 13=-302(load case 3)
Max Uplift8=-403(load case 6), 13=-459(load case 5)

FORCES (lb) - Maximum Compression/Maximum Tension
TOP CHORD 1-14=-73/73, 1-2=-221/264, 2-3=-1125/348, 3-4=-1326/488, 4-5=-1228/504, 5-6=-1488/506, 6-7=-3909/1026, 7-8=-4238/1319
BOT CHORD 13-14=-63/70, 12-13=-271/934, 11-12=-266/1158, 10-11=-189/1132, 9-10=-727/3539, 8-9=-1108/3802
WEBS 1-13=-416/354, 2-13=-1839/479, 2-12=-81/539, 3-12=-376/217, 3-11=-153/150, 4-11=-53/109, 4-10=-160/531, 5-10=-89/454, 6-10=-2642/755, 6-9=-507/2537, 7-9=-271/355

JOINT STRESS INDEX
1 = 0.69, 2 = 0.78, 3 = 0.42, 4 = 0.32, 5 = 0.56, 6 = 0.84, 7 = 0.34, 8 = 0.82, 9 = 0.95, 10 = 0.74, 11 = 0.64, 12 = 0.38, 13 = 0.64 and 14 = 0.76

NOTES
1) Unbalanced roof live loads have been considered for this design.
2) Wind: ASCE 7-02; 110mph (3-second gust); h=20ft; TCDL=4.2psf; BCDL=3.0psf; Category II; Exp B; enclosed; MWFRS gable end zone and C-C Interior(1) zone; cantilever left exposed ; Lumber DOL=1.60 plate grip DOL=1.60. This truss is designed for C-C for members and forces, and for MWFRS for reactions specified.
3) Provide adequate drainage to prevent water ponding.
4) All bearings are assumed to be SYP No.2 crushing capacity of 565.00 psi
5) Bearing at joint(s) 8 considers parallel to grain value using ANSI/TPI 1 angle to grain formula. Building designer should verify capacity of bearing surface.
6) Provide mechanical connection (by others) of truss to bearing plate capable of withstanding 403 lb uplift at joint 8 and 459 lb uplift at joint 13.

LOAD CASE(S) Standard

MARCH 13,2007 TRUSS DESIGN ENGINEER:
THOMAS E. MILLER PE 56877, BYRON K. ANDERSON PE 60987
STRUCTURAL ENGINEERING AND INSPECTIONS, INC. EB 9196
16105 N. FLORIDA AVE. STE B, LUTZ, FL 33549

Job	Truss	Truss Type	Qty	Ply	ADAMS FRAMING - LOT 10 WISE ESTATES
L230379	T20	SPECIAL	1	1	Job Reference (optional)

Builders FirstSource, Lake City, Fl 32055 — 6.300 s Apr 19 2006 MiTek Industries, Inc. Mon Mar 12 15:10:58 2007 Page 1

7-0-0	8-8-9	13-6-7	18-4-5	25-6-0	29-10-13	35-0-0
7-0-0	1-8-9	4-9-14	4-9-14	7-1-11	4-4-13	5-1-3

Scale = 1:61.5

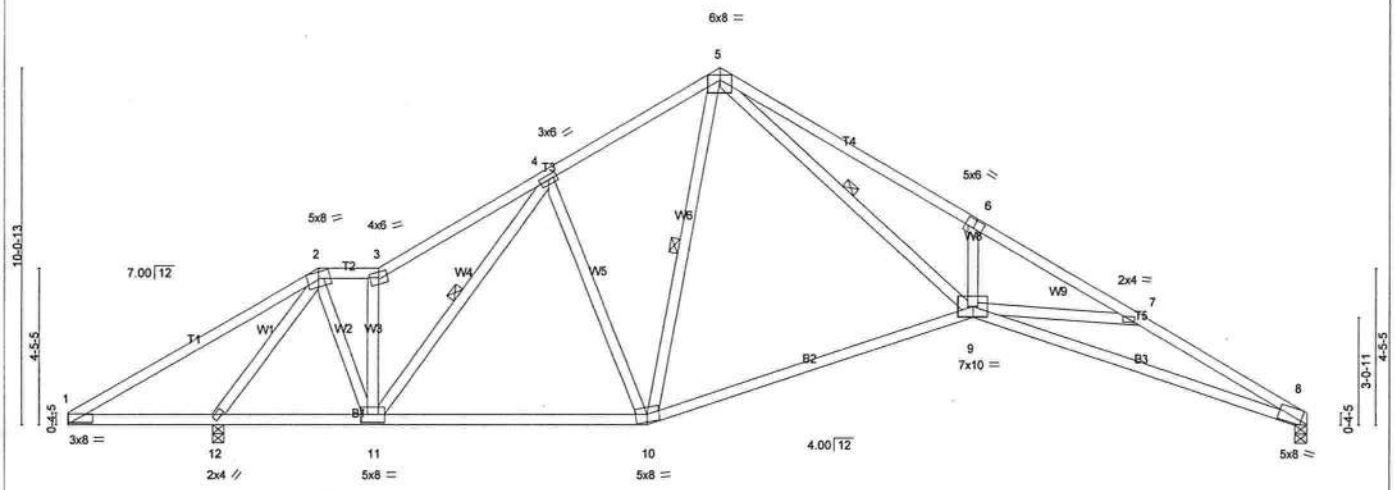

4-2-0	8-8-9	16-4-0	25-6-0	35-0-0
4-2-0	4-6-9	7-7-7	9-2-0	9-6-0

Plate Offsets (X,Y): [1:0-8-1,0-0-10], [6:0-3-0,0-3-0], [8:0-2-2,Edge]

LOADING (psf)		SPACING 2-0-0		CSI		DEFL	in	(loc)	l/defl	L/d	PLATES	GRIP
TCLL	20.0	Plates Increase	1.25	TC	0.76	Vert(LL)	-0.48	8-9	>767	240	MT20	244/190
TCDL	7.0	Lumber Increase	1.25	BC	0.91	Vert(TL)	-0.78	8-9	>472	180		
BCLL	10.0	Rep Stress Incr	YES	WB	0.82	Horz(TL)	0.43	8	n/a	n/a		
BCDL	5.0	Code FBC2004/TPI2002		(Matrix)							Weight: 195 lb	

LUMBER
TOP CHORD 2 X 4 SYP No.2
BOT CHORD 2 X 4 SYP No.2
WEBS 2 X 4 SYP No.3 *Except*
W7 2 X 4 SYP No.2

BRACING
TOP CHORD Structural wood sheathing directly applied or 2-2-0 oc purlins.
BOT CHORD Rigid ceiling directly applied or 2-2-0 oc bracing.
WEBS 1 Row at midpt 4-11, 5-10, 5-9

REACTIONS (lb/size) 8=1270/0-4-0, 12=1656/0-4-0
Max Horz 12=-340(load case 3)
Max Uplift8=-415(load case 6), 12=-650(load case 5)

FORCES (lb) - Maximum Compression/Maximum Tension
TOP CHORD 1-2=-257/449, 2-3=-1088/383, 3-4=-1347/515, 4-5=-1315/544, 5-6=-3989/1284, 6-7=-3961/1091, 7-8=-4256/1352
BOT CHORD 1-12=-299/279, 11-12=-292/737, 10-11=-292/1159, 9-10=-190/1174, 8-9=-1135/3818
WEBS 2-12=-1785/671, 2-11=-229/991, 3-11=-706/274, 4-11=-119/45, 4-10=-244/247, 5-10=-130/244, 5-9=-938/3141, 6-9=-332/339, 7-9=-233/318

JOINT STRESS INDEX
1 = 0.73, 2 = 0.60, 3 = 0.48, 4 = 0.45, 5 = 0.85, 6 = 0.65, 7 = 0.34, 8 = 0.83, 9 = 0.75, 10 = 0.66, 11 = 0.56 and 12 = 0.94

NOTES
1) Unbalanced roof live loads have been considered for this design.
2) Wind: ASCE 7-02; 110mph (3-second gust); h=20ft; TCDL=4.2psf; BCDL=3.0psf; Category II; Exp B; enclosed; MWFRS gable end zone and C-C Interior(1) zone; cantilever left exposed ; Lumber DOL=1.60 plate grip DOL=1.60. This truss is designed for C-C for members and forces, and for MWFRS for reactions specified.
3) Provide adequate drainage to prevent water ponding.
4) All bearings are assumed to be SYP No.2 crushing capacity of 565.00 psi
5) Bearing at joint(s) 8 considers parallel to grain value using ANSI/TPI 1 angle to grain formula. Building designer should verify capacity of bearing surface.
6) Provide mechanical connection (by others) of truss to bearing plate capable of withstanding 415 lb uplift at joint 8 and 650 lb uplift at joint 12.

LOAD CASE(S) Standard

MARCH 13,2007 TRUSS DESIGN ENGINEER:
THOMAS E. MILLER PE 56877, BYRON K. ANDERSON PE 60987
STRUCTURAL ENGINEERING AND INSPECTIONS, INC. EB 9196
16105 N. FLORIDA AVE. STE B, LUTZ, FL 33549

Job	Truss	Truss Type	Qty	Ply	ADAMS FRAMING - LOT 10 WISE ESTATES
L230379	T21	SPECIAL	1	1	Job Reference (optional)

Builders FirstSource, Lake City, Fl 32055 — 6.300 s Apr 19 2006 MiTek Industries, Inc. Mon Mar 12 15:10:49 2007 Page 1

4-2-0	9-0-0	10-8-9	18-4-5	25-6-0	29-10-13	35-0-0	36-6-0
4-2-0	4-10-0	1-8-9	7-7-11	7-1-11	4-4-13	5-1-3	1-6-0

Scale = 1:63.2

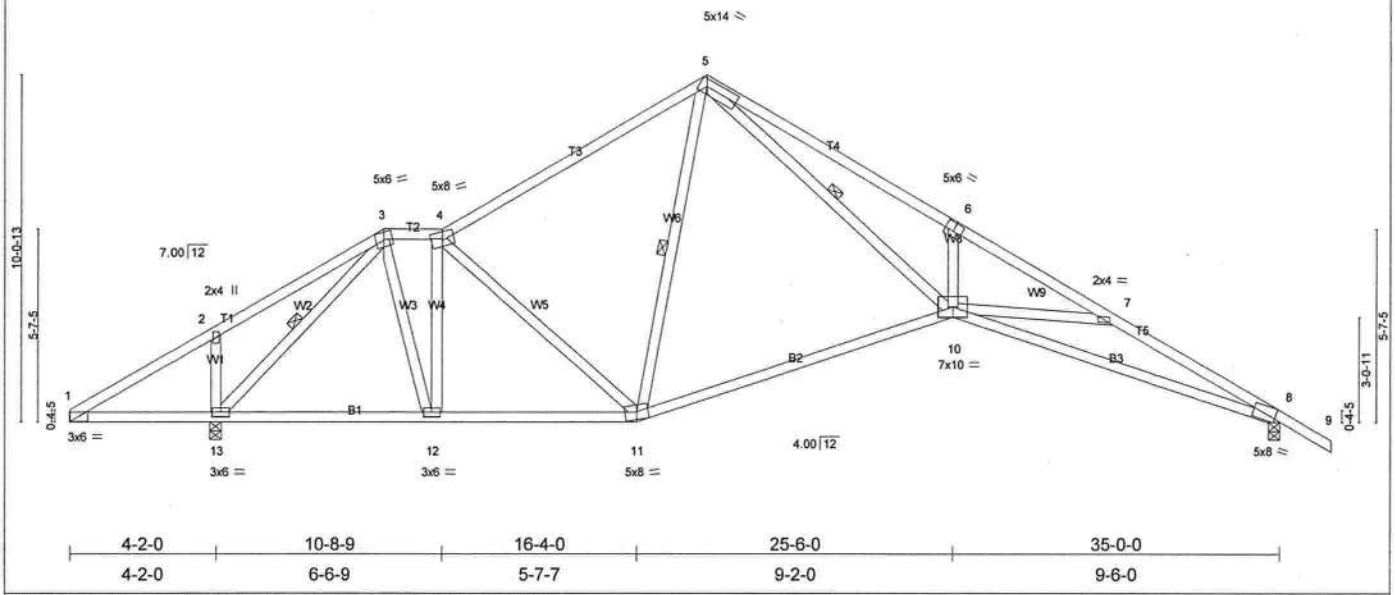

4-2-0	10-8-9	16-4-0	25-6-0	35-0-0
4-2-0	6-6-9	5-7-7	9-2-0	9-6-0

Plate Offsets (X,Y): [1:0-3-3,0-1-8], [5:0-11-6,0-2-8], [6:0-3-0,0-3-0], [8:0-2-2,Edge]

LOADING (psf)		SPACING 2-0-0		CSI		DEFL	in	(loc)	l/defl	L/d	PLATES	GRIP
TCLL	20.0	Plates Increase	1.25	TC	0.69	Vert(LL)	-0.49	10-11	>749	240	MT20	244/190
TCDL	7.0	Lumber Increase	1.25	BC	0.88	Vert(TL)	-0.80	10-11	>461	180		
BCLL	10.0	Rep Stress Incr	YES	WB	0.99	Horz(TL)	0.43	8	n/a	n/a		
BCDL	5.0	Code FBC2004/TPI2002		(Matrix)							Weight: 195 lb	

LUMBER
TOP CHORD 2 X 4 SYP No.2
BOT CHORD 2 X 4 SYP No.2
WEBS 2 X 4 SYP No.3

BRACING
TOP CHORD Structural wood sheathing directly applied or 2-6-7 oc purlins.
BOT CHORD Rigid ceiling directly applied or 6-0-0 oc bracing.
WEBS 1 Row at midpt 3-13, 5-11, 5-10

REACTIONS (lb/size) 8=1357/0-4-0, 13=1659/0-4-0
Max Horz 13=-358(load case 3)
Max Uplift8=-510(load case 6), 13=-654(load case 5)

FORCES (lb) - Maximum Compression/Maximum Tension
TOP CHORD 1-2=-224/295, 2-3=-95/280, 3-4=-1134/433, 4-5=-1328/514, 5-6=-3920/1162, 6-7=-3902/973, 7-8=-4191/1217, 8-9=0/38
BOT CHORD 1-13=-192/219, 12-13=-230/875, 11-12=-323/1180, 10-11=-172/1166, 8-10=-954/3753
WEBS 2-13=-288/284, 3-13=-1583/452, 3-12=-321/1002, 4-12=-820/356, 4-11=-227/214, 5-11=-76/141, 5-10=-807/3081, 6-10=-333/331, 7-10=-209/300

JOINT STRESS INDEX
1 = 0.25, 2 = 0.34, 3 = 0.51, 4 = 0.74, 5 = 0.92, 6 = 0.61, 7 = 0.34, 8 = 0.82, 10 = 0.74, 11 = 0.58, 12 = 0.72 and 13 = 0.52

NOTES
1) Unbalanced roof live loads have been considered for this design.
2) Wind: ASCE 7-02; 110mph (3-second gust); h=20ft; TCDL=4.2psf; BCDL=3.0psf; Category II; Exp B; enclosed; MWFRS gable end zone and C-C Interior(1) zone; cantilever left exposed ; Lumber DOL=1.60 plate grip DOL=1.60. This truss is designed for C-C for members and forces, and for MWFRS for reactions specified.
3) Provide adequate drainage to prevent water ponding.
4) All bearings are assumed to be SYP No.2 crushing capacity of 565.00 psi
5) Bearing at joint(s) 8 considers parallel to grain value using ANSI/TPI 1 angle to grain formula. Building designer should verify capacity of bearing surface.
6) Provide mechanical connection (by others) of truss to bearing plate capable of withstanding 510 lb uplift at joint 8 and 654 lb uplift at joint 13.

LOAD CASE(S) Standard

MARCH 13,2007 TRUSS DESIGN ENGINEER:
THOMAS E. MILLER PE 56877, BYRON K. ANDERSON PE 60987
STRUCTURAL ENGINEERING AND INSPECTIONS, INC. EB 9196
16105 N. FLORIDA AVE. STE B, LUTZ, FL 33549

Job	Truss	Truss Type	Qty	Ply	ADAMS FRAMING - LOT 10 WISE ESTATES
L230379	T22	SPECIAL	1	1	Job Reference (optional)

Builders FirstSource, Lake City, Fl 32055 — 6.300 s Apr 19 2006 MiTek Industries, Inc. Mon Mar 12 15:13:19 2007 Page 1

1-6-0	5-8-13	11-0-0	12-8-9	18-4-5	25-6-0	29-10-13	35-0-0	36-6-0
1-6-0	5-8-13	5-3-3	1-8-9	5-7-11	7-1-11	4-4-13	5-1-3	1-6-0

Scale = 1:65.4

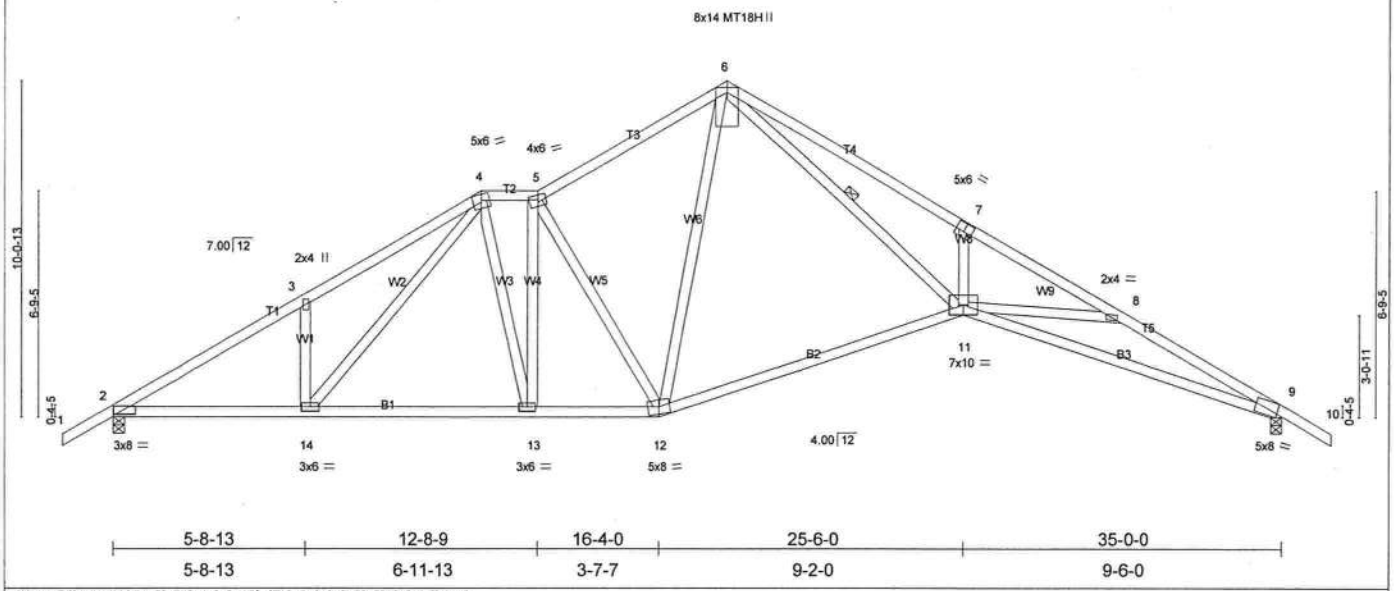

5-8-13	12-8-9	16-4-0	25-6-0	35-0-0
5-8-13	6-11-13	3-7-7	9-2-0	9-6-0

Plate Offsets (X,Y): [2:0-8-1,0-0-10], [7:0-3-0,0-3-0], [9:0-2-2,Edge]

LOADING (psf)		SPACING	2-0-0	CSI		DEFL	in	(loc)	l/defl	L/d	PLATES	GRIP
TCLL	20.0	Plates Increase	1.25	TC	0.96	Vert(LL)	-0.62	11-12	>672	240	MT20	244/190
TCDL	7.0	Lumber Increase	1.25	BC	1.00	Vert(TL)	-1.00	11-12	>414	180	MT18H	244/190
BCLL	10.0	Rep Stress Incr	YES	WB	0.68	Horz(TL)	0.53	9	n/a	n/a		
BCDL	5.0	Code FBC2004/TPI2002		(Matrix)							Weight: 204 lb	

LUMBER
TOP CHORD 2 X 4 SYP No.2
BOT CHORD 2 X 4 SYP No.2
WEBS 2 X 4 SYP No.3 *Except*
W7 2 X 4 SYP No.2

BRACING
TOP CHORD Structural wood sheathing directly applied.
BOT CHORD Rigid ceiling directly applied or 1-4-12 oc bracing.
WEBS 1 Row at midpt 6-11

REACTIONS (lb/size) 2=1546/0-4-0, 9=1546/0-4-0
Max Horz 2=344(load case 4)
Max Uplift2=-571(load case 5), 9=-559(load case 6)

FORCES (lb) - Maximum Compression/Maximum Tension
TOP CHORD 1-2=0/40, 2-3=-2478/762, 3-4=-2452/930, 4-5=-1795/682, 5-6=-1762/666, 6-7=-4736/1375, 7-8=-4699/1219, 8-9=-4937/1408, 9-10=0/38
BOT CHORD 2-14=-678/2053, 13-14=-478/1673, 12-13=-501/1804, 11-12=-293/1523, 9-11=-1124/4417
WEBS 3-14=-263/285, 4-14=-317/615, 4-13=-131/517, 5-13=-381/157, 5-12=-691/383, 6-12=-213/471, 6-11=-938/3579, 7-11=-333/338, 8-11=-170/279

JOINT STRESS INDEX
2 = 0.82, 3 = 0.34, 4 = 0.50, 5 = 0.67, 6 = 0.70, 7 = 0.65, 8 = 0.34, 9 = 0.96, 11 = 0.83, 12 = 0.62, 13 = 0.52 and 14 = 0.43

NOTES
1) Unbalanced roof live loads have been considered for this design.
2) Wind: ASCE 7-02; 110mph (3-second gust); h=20ft; TCDL=4.2psf; BCDL=3.0psf; Category II; Exp B; enclosed; MWFRS gable end zone and C-C Interior(1) zone; Lumber DOL=1.60 plate grip DOL=1.60. This truss is designed for C-C for members and forces, and for MWFRS for reactions specified.
3) Provide adequate drainage to prevent water ponding.
4) All plates are MT20 plates unless otherwise indicated.
5) All bearings are assumed to be SYP No.2 crushing capacity of 565.00 psi
6) Bearing at joint(s) 9 considers parallel to grain value using ANSI/TPI 1 angle to grain formula. Building designer should verify capacity of bearing surface.
7) Provide mechanical connection (by others) of truss to bearing plate capable of withstanding 571 lb uplift at joint 2 and 559 lb uplift at joint 9.

LOAD CASE(S) Standard

MARCH 13,2007 TRUSS DESIGN ENGINEER:
THOMAS E. MILLER PE 56877, BYRON K. ANDERSON PE 60987
STRUCTURAL ENGINEERING AND INSPECTIONS, INC. EB 9196
16105 N. FLORIDA AVE. STE B, LUTZ, FL 33549

Job	Truss	Truss Type	Qty	Ply	ADAMS FRAMING - LOT 10 WISE ESTATES
L230379	T23	SPECIAL	1	1	Job Reference (optional)

Builders FirstSource, Lake City, Fl 32055 — 6.300 s Apr 19 2006 MiTek Industries, Inc. Mon Mar 12 15:18:14 2007 Page 1

-1-6-0	6-8-13	13-0-0	14-8-9	18-4-5	25-6-0	29-10-13	35-0-0	36-6-0
1-6-0	6-8-13	6-3-3	1-8-9	3-7-11	7-1-11	4-4-13	5-1-3	1-6-0

Scale = 1:65.4

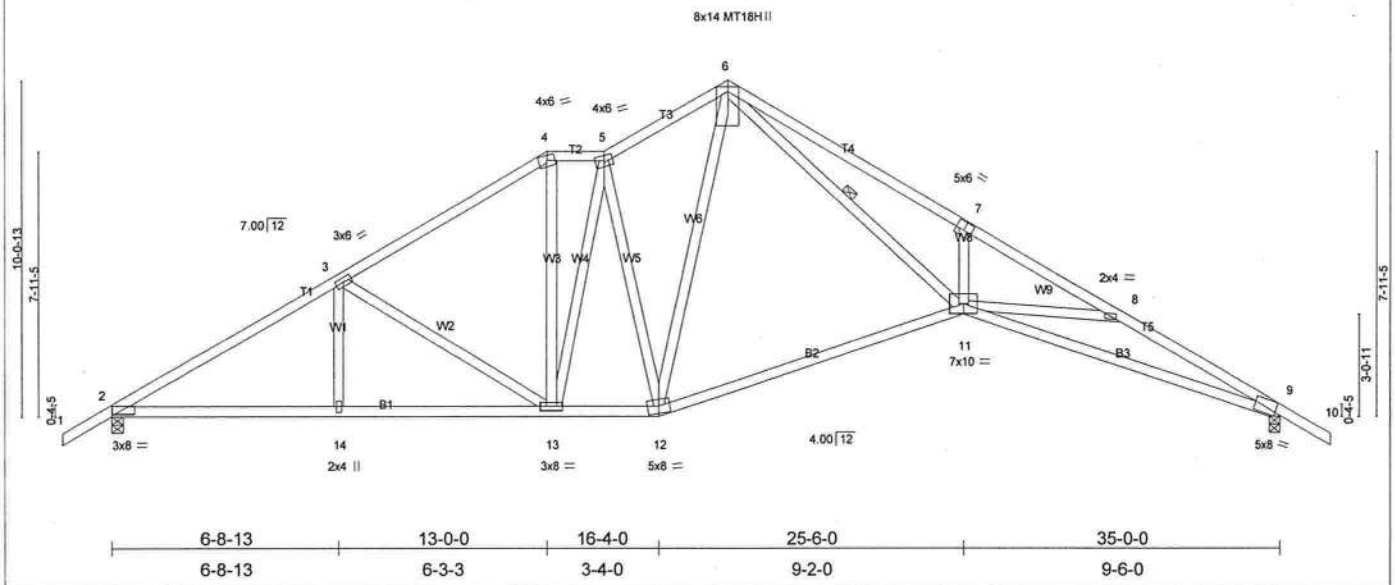

6-8-13	13-0-0	16-4-0	25-6-0	35-0-0
6-8-13	6-3-3	3-4-0	9-2-0	9-6-0

Plate Offsets (X,Y): [2:0-8-1,0-0-10], [7:0-3-0,0-3-0], [9:0-2-2,Edge]

LOADING (psf)		SPACING 2-0-0		CSI		DEFL	in	(loc)	l/defl	L/d	PLATES	GRIP
TCLL	20.0	Plates Increase	1.25	TC	0.97	Vert(LL)	-0.61	11-12	>678	240	MT20	244/190
TCDL	7.0	Lumber Increase	1.25	BC	1.00	Vert(TL)	-0.99	11-12	>418	180	MT18H	244/190
BCLL	10.0	Rep Stress Incr	YES	WB	0.69	Horz(TL)	0.53	9	n/a	n/a		
BCDL	5.0	Code FBC2004/TPI2002		(Matrix)							Weight: 208 lb	

LUMBER
TOP CHORD 2 X 4 SYP No.2
BOT CHORD 2 X 4 SYP No.2
WEBS 2 X 4 SYP No.3 *Except*
W7 2 X 4 SYP No.2

BRACING
TOP CHORD Structural wood sheathing directly applied.
BOT CHORD Rigid ceiling directly applied.
WEBS 1 Row at midpt 6-11

REACTIONS (lb/size) 2=1546/0-4-0, 9=1546/0-4-0
Max Horz 2=344(load case 4)
Max Uplift2=-571(load case 5), 9=-559(load case 6)

FORCES (lb) - Maximum Compression/Maximum Tension
TOP CHORD 1-2=0/40, 2-3=-2439/756, 3-4=-1883/658, 4-5=-1559/638, 5-6=-1706/681, 6-7=-4737/1375, 7-8=-4699/1222, 8-9=-4936/1408, 9-10=0/38
BOT CHORD 2-14=-661/2015, 13-14=-661/2015, 12-13=-392/1599, 11-12=-290/1522, 9-11=-1124/4416
WEBS 3-14=0/233, 3-13=-558/307, 4-13=-126/564, 5-13=-252/113, 5-12=-637/363, 6-12=-238/502, 6-11=-938/3579, 7-11=-327/339, 8-11=-174/279

JOINT STRESS INDEX
2 = 0.81, 3 = 0.42, 4 = 0.69, 5 = 0.47, 6 = 0.69, 7 = 0.65, 8 = 0.34, 9 = 0.96, 11 = 0.83, 12 = 0.62, 13 = 0.70 and 14 = 0.34

NOTES
1) Unbalanced roof live loads have been considered for this design.
2) Wind: ASCE 7-02; 110mph (3-second gust); h=20ft; TCDL=4.2psf; BCDL=3.0psf; Category II; Exp B; enclosed; MWFRS gable end zone and C-C Interior(1) zone; Lumber DOL=1.60 plate grip DOL=1.60. This truss is designed for C-C for members and forces, and for MWFRS for reactions specified.
3) Provide adequate drainage to prevent water ponding.
4) All plates are MT20 plates unless otherwise indicated.
5) All bearings are assumed to be SYP No.2 crushing capacity of 565.00 psi
6) Bearing at joint(s) 9 considers parallel to grain value using ANSI/TPI 1 angle to grain formula. Building designer should verify capacity of bearing surface.
7) Provide mechanical connection (by others) of truss to bearing plate capable of withstanding 571 lb uplift at joint 2 and 559 lb uplift at joint 9.

LOAD CASE(S) Standard

MARCH 13,2007 TRUSS DESIGN ENGINEER:
THOMAS E. MILLER PE 56877, BYRON K. ANDERSON PE 60987
STRUCTURAL ENGINEERING AND INSPECTIONS, INC. EB 9196
16105 N. FLORIDA AVE. STE B, LUTZ, FL 33549

Job	Truss	Truss Type	Qty	Ply	ADAMS FRAMING - LOT 10 WISE ESTATES
L230379	T24	SPECIAL	1	1	Job Reference (optional)

Builders FirstSource, Lake City, Fl 32055 — 6.300 s Apr 19 2006 MiTek Industries, Inc. Mon Mar 12 15:19:51 2007 Page 1

-1-6-0	7-8-13	15-0-0	16-8-9	18-4-5	25-6-0	29-10-13	35-0-0	36-6-0
1-6-0	7-8-13	7-3-3	1-8-9	1-7-11	7-1-11	4-4-13	5-1-3	1-6-0

Scale = 1:65.4

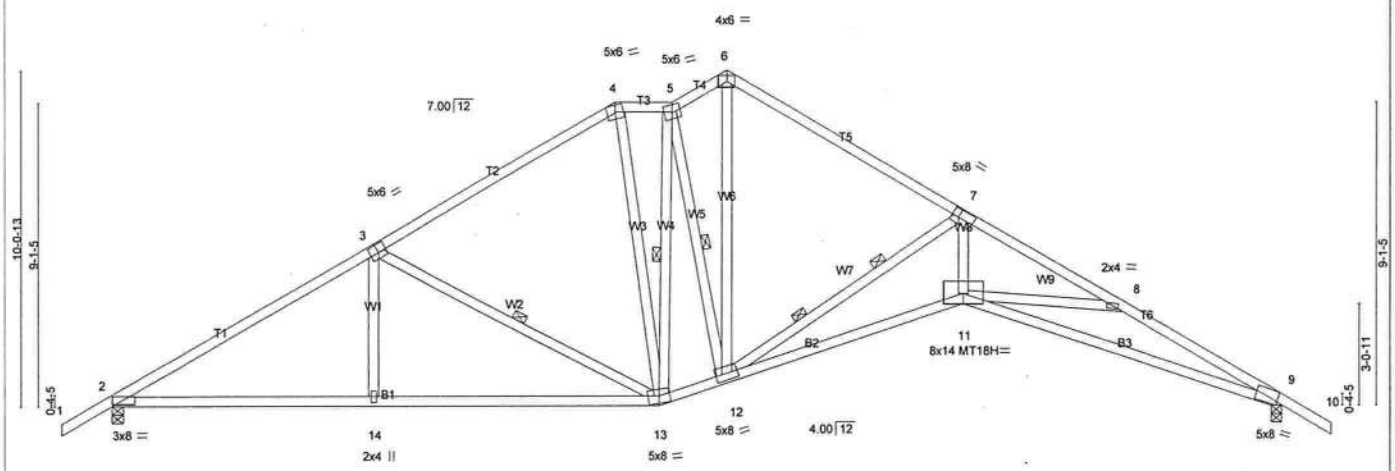

7-8-13	16-4-0	18-4-5	25-6-0	35-0-0
7-8-13	8-7-3	2-0-5	7-1-11	9-6-0

Plate Offsets (X,Y): [2:0-8-1,0-0-10], [3:0-3-0,0-3-0], [7:0-2-8,0-3-0], [9:0-2-2,Edge], [11:0-7-0,0-3-11]

LOADING (psf)		SPACING 2-0-0		CSI		DEFL	in	(loc)	l/defl	L/d	PLATES	GRIP
TCLL	20.0	Plates Increase	1.25	TC	0.57	Vert(LL)	-0.54	9-11	>777	240	MT20	244/190
TCDL	7.0	Lumber Increase	1.25	BC	0.86	Vert(TL)	-0.87	9-11	>479	180	MT18H	244/190
BCLL	10.0	Rep Stress Incr	YES	WB	0.94	Horz(TL)	0.53	9	n/a	n/a		
BCDL	5.0	Code FBC2004/TPI2002		(Matrix)							Weight: 213 lb	

LUMBER
TOP CHORD 2 X 4 SYP No.2
BOT CHORD 2 X 4 SYP No.2 *Except*
B3 2 X 4 SYP No.1D
WEBS 2 X 4 SYP No.3

BRACING
TOP CHORD Structural wood sheathing directly applied or 2-4-3 oc purlins.
BOT CHORD Rigid ceiling directly applied or 6-3-6 oc bracing.
WEBS 1 Row at midpt 3-13, 5-13, 5-12
2 Rows at 1/3 pts 7-12

REACTIONS (lb/size) 2=1546/0-4-0, 9=1546/0-4-0
Max Horz 2=344(load case 4)
Max Uplift2=-571(load case 5), 9=-559(load case 6)

FORCES (lb) - Maximum Compression/Maximum Tension
TOP CHORD 1-2=0/40, 2-3=-2403/740, 3-4=-1689/596, 4-5=-1421/589, 5-6=-1525/600, 6-7=-1729/632, 7-8=-4671/1221, 8-9=-4926/1416, 9-10=0/38
BOT CHORD 2-14=-633/1977, 13-14=-634/1972, 12-13=-321/1518, 11-12=-930/4163, 9-11=-1132/4408
WEBS 3-14=0/284, 3-13=-694/377, 4-13=-63/394, 5-13=-388/105, 5-12=-282/184, 6-12=-378/1117, 7-12=-3046/820, 7-11=-579/2931, 8-11=-196/294

JOINT STRESS INDEX
2 = 0.80, 3 = 0.85, 4 = 0.70, 5 = 0.66, 6 = 0.82, 7 = 0.99, 8 = 0.34, 9 = 0.96, 11 = 0.64, 12 = 0.88, 13 = 0.54 and 14 = 0.34

NOTES
1) Unbalanced roof live loads have been considered for this design.
2) Wind: ASCE 7-02; 110mph (3-second gust); h=20ft; TCDL=4.2psf; BCDL=3.0psf; Category II; Exp B; enclosed; MWFRS gable end zone and C-C Interior(1) zone; Lumber DOL=1.60 plate grip DOL=1.60. This truss is designed for C-C for members and forces, and for MWFRS for reactions specified.
3) Provide adequate drainage to prevent water ponding.
4) All plates are MT20 plates unless otherwise indicated.
5) All bearings are assumed to be SYP No.2 crushing capacity of 565.00 psi
6) Bearing at joint(s) 9 considers parallel to grain value using ANSI/TPI 1 angle to grain formula. Building designer should verify capacity of bearing surface.
7) Provide mechanical connection (by others) of truss to bearing plate capable of withstanding 571 lb uplift at joint 2 and 559 lb uplift at joint 9.

LOAD CASE(S) Standard

MARCH 13,2007 TRUSS DESIGN ENGINEER:
THOMAS E. MILLER PE 56877, BYRON K. ANDERSON PE 60987
STRUCTURAL ENGINEERING AND INSPECTIONS, INC. EB 9196
16105 N. FLORIDA AVE. STE B, LUTZ, FL 33549

Dwg.#0313071040

Job	Truss	Truss Type	Qty	Ply	ADAMS FRAMING - LOT 10 WISE ESTATES
L230379	T25	SPECIAL	1	1	Job Reference (optional)

Builders FirstSource, Lake City, Fl 32055 — 6.300 s Apr 19 2006 MiTek Industries, Inc. Mon Mar 12 15:36:06 2007 Page 1

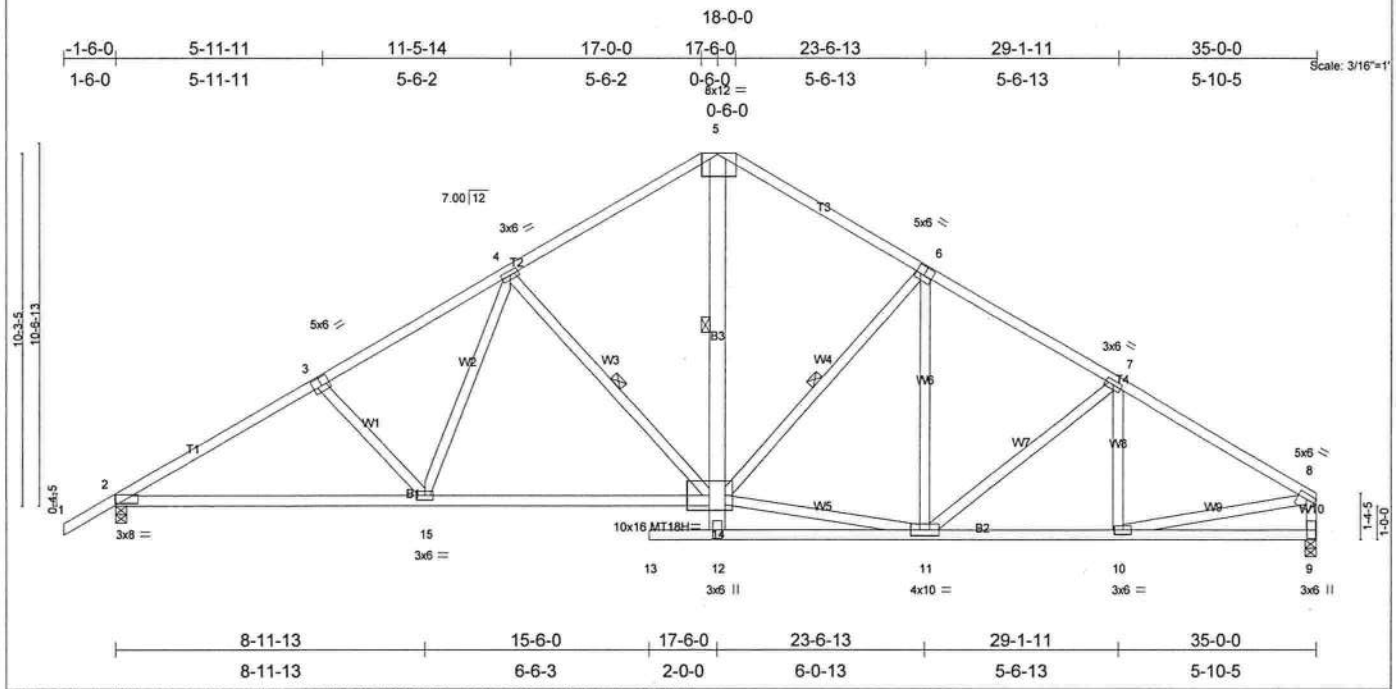

Plate Offsets (X,Y): [2:0-8-1,0-0-10], [3:0-3-0,0-3-0], [5:0-6-5,Edge], [6:0-3-0,0-3-0], [8:Edge,0-1-12]

LOADING (psf)		SPACING	2-0-0	CSI		DEFL	in	(loc)	l/defl	L/d	PLATES	GRIP
TCLL	20.0	Plates Increase	1.25	TC	0.57	Vert(LL)	-0.19	2-15	>999	240	MT20	244/190
TCDL	7.0	Lumber Increase	1.25	BC	0.64	Vert(TL)	-0.33	2-15	>999	180	MT18H	244/190
BCLL	10.0	Rep Stress Incr	YES	WB	0.47	Horz(TL)	0.09	9	n/a	n/a		
BCDL	5.0	Code FBC2004/TPI2002		(Matrix)							Weight: 231 lb	

LUMBER
TOP CHORD 2 X 4 SYP No.2
BOT CHORD 2 X 4 SYP No.2 *Except*
B3 2 X 6 SYP No.1D
WEBS 2 X 4 SYP No.3

BRACING
TOP CHORD Structural wood sheathing directly applied or 3-8-13 oc purlins, except end verticals.
BOT CHORD Rigid ceiling directly applied or 7-7-1 oc bracing. Except:
1 Row at midpt 5-14
WEBS 1 Row at midpt 4-14, 6-14

REACTIONS (lb/size) 2=1581/0-4-0, 9=1483/0-4-0
Max Horz 2=375(load case 4)
Max Uplift2=-558(load case 5), 9=-462(load case 6)

FORCES (lb) - Maximum Compression/Maximum Tension
TOP CHORD 1-2=0/40, 2-3=-2452/748, 3-4=-2260/725, 4-5=-1598/592, 5-6=-1587/584, 6-7=-1816/624, 7-8=-1971/613, 8-9=-1387/473
BOT CHORD 2-15=-695/2052, 14-15=-478/1707, 12-14=0/161, 5-14=-379/1184, 12-13=0/0, 11-12=-67/60, 10-11=-443/1632, 9-10=-120/242
WEBS 3-15=-260/251, 4-15=-145/511, 4-14=-599/367, 6-11=-69/87, 7-11=-202/181, 7-10=-118/105, 8-10=-329/1417, 11-14=-271/1465, 6-14=-362/305

JOINT STRESS INDEX
2 = 0.82, 3 = 0.47, 4 = 0.42, 5 = 0.53, 6 = 0.49, 7 = 0.42, 8 = 0.64, 9 = 0.42, 10 = 0.78, 11 = 0.65, 12 = 0.29, 14 = 0.37 and 15 = 0.49

NOTES
1) Unbalanced roof live loads have been considered for this design.
2) Wind: ASCE 7-02; 110mph (3-second gust); h=20ft; TCDL=4.2psf; BCDL=3.0psf; Category II; Exp B; enclosed; MWFRS gable end zone and C-C Interior(1) zone; Lumber DOL=1.60 plate grip DOL=1.60. This truss is designed for C-C for members and forces, and for MWFRS for reactions specified.
3) All plates are MT20 plates unless otherwise indicated.
4) All bearings are assumed to be SYP No.2 crushing capacity of 565.00 psi
5) Provide mechanical connection (by others) of truss to bearing plate capable of withstanding 558 lb uplift at joint 2 and 462 lb uplift at joint 9.

LOAD CASE(S) Standard

MARCH 13,2007 TRUSS DESIGN ENGINEER:
THOMAS E. MILLER PE 56877, BYRON K. ANDERSON PE 60987
STRUCTURAL ENGINEERING AND INSPECTIONS, INC. EB 9196
16105 N. FLORIDA AVE. STE B, LUTZ, FL 33549

Job	Truss	Truss Type	Qty	Ply	ADAMS FRAMING - LOT 10 WISE ESTATES
L230379	T26	HIP	1	1	Job Reference (optional)

Builders FirstSource, Lake City, Fl 32055 — 6.300 s Apr 19 2006 MiTek Industries, Inc. Mon Mar 12 15:36:30 2007 Page 1

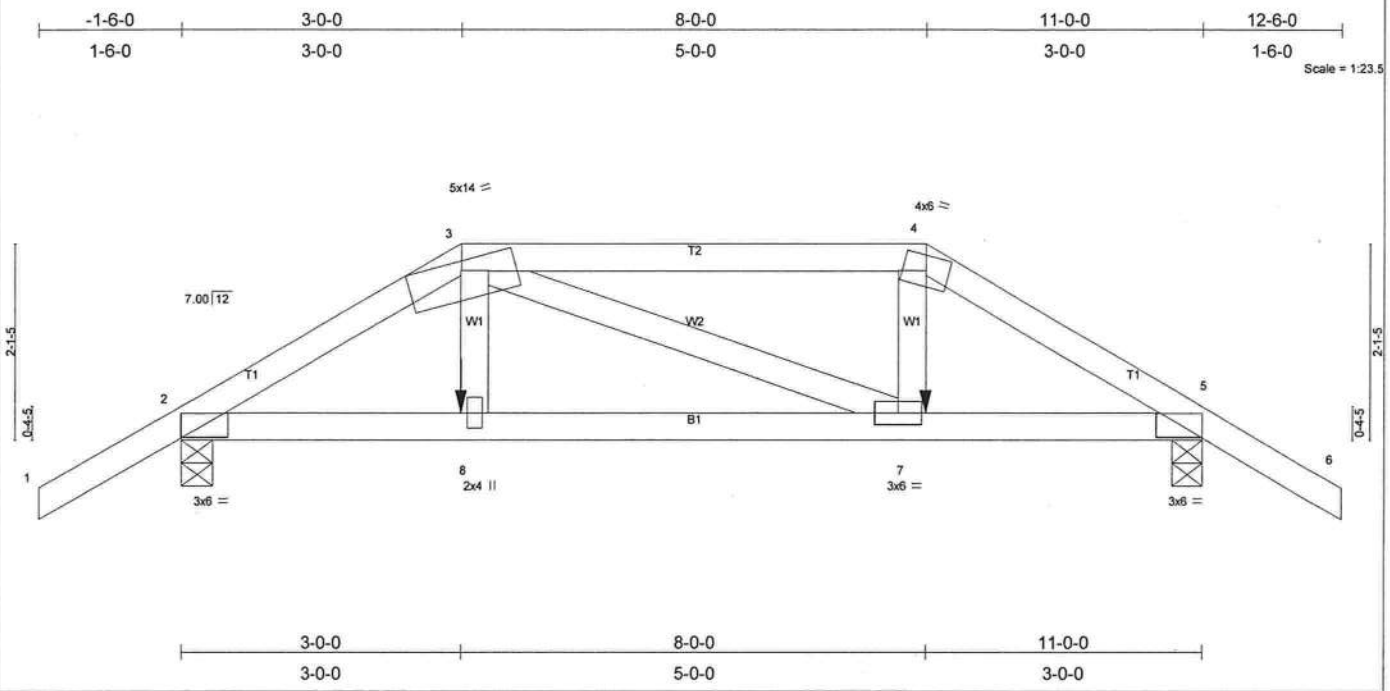

Plate Offsets (X,Y): [2:0-3-3,0-1-8], [5:0-3-3,0-1-8]

LOADING (psf)		SPACING 2-0-0		CSI		DEFL	in	(loc)	l/defl	L/d	PLATES	GRIP
TCLL	20.0	Plates Increase	1.25	TC	0.23	Vert(LL)	0.04	7-8	>999	240	MT20	244/190
TCDL	7.0	Lumber Increase	1.25	BC	0.22	Vert(TL)	-0.05	7-8	>999	180		
BCLL	10.0	Rep Stress Incr	NO	WB	0.07	Horz(TL)	0.01	5	n/a	n/a		
BCDL	5.0	Code FBC2004/TPI2002		(Matrix)							Weight: 51 lb	

LUMBER
TOP CHORD 2 X 4 SYP No.2
BOT CHORD 2 X 4 SYP No.2
WEBS 2 X 4 SYP No.3

BRACING
TOP CHORD Structural wood sheathing directly applied or 6-0-0 oc purlins.
BOT CHORD Rigid ceiling directly applied or 8-7-10 oc bracing.

REACTIONS (lb/size) 2=635/0-4-0, 5=635/0-4-0
Max Horz 2=67(load case 3)
Max Uplift2=-429(load case 4), 5=-429(load case 5)

FORCES (lb) - Maximum Compression/Maximum Tension
TOP CHORD 1-2=0/40, 2-3=-856/581, 3-4=-713/536, 4-5=-857/582, 5-6=0/40
BOT CHORD 2-8=-519/697, 7-8=-530/713, 5-7=-460/698
WEBS 3-8=-132/194, 3-7=-61/61, 4-7=-146/205

JOINT STRESS INDEX
2 = 0.51, 3 = 0.57, 4 = 0.48, 5 = 0.51, 7 = 0.13 and 8 = 0.14

NOTES
1) Unbalanced roof live loads have been considered for this design.
2) Wind: ASCE 7-02; 110mph (3-second gust); h=20ft; TCDL=4.2psf; BCDL=3.0psf; Category II; Exp B; enclosed; MWFRS gable end zone; porch left and right exposed; Lumber DOL=1.60 plate grip DOL=1.60.
3) Provide adequate drainage to prevent water ponding.
4) All bearings are assumed to be SYP No.2 crushing capacity of 565.00 psi
5) Provide mechanical connection (by others) of truss to bearing plate capable of withstanding 429 lb uplift at joint 2 and 429 lb uplift at joint 5.
6) Girder carries hip end with 3-0-0 end setback.
7) Hanger(s) or other connection device(s) shall be provided sufficient to support concentrated load(s) 63 lb down and 44 lb up at 8-0-0, and 63 lb down and 44 lb up at 3-0-0 on bottom chord. The design/selection of such connection device(s) is the responsibility of others.
8) In the LOAD CASE(S) section, loads applied to the face of the truss are noted as front (F) or back (B).

LOAD CASE(S) Standard
1) Regular: Lumber Increase=1.25, Plate Increase=1.25
Uniform Loads (plf)
Vert: 1-3=-54, 3-4=-63(F=-9), 4-6=-54, 2-8=-30, 7-8=-35(F=-5), 5-7=-30
Concentrated Loads (lb)
Vert: 8=-63(F) 7=-63(F)

MARCH 13,2007 TRUSS DESIGN ENGINEER:
THOMAS E. MILLER PE 56877, BYRON K. ANDERSON PE 60987
STRUCTURAL ENGINEERING AND INSPECTIONS, INC. EB 9196
16105 N. FLORIDA AVE. STE B, LUTZ, FL 33549

Job	Truss	Truss Type	Qty	Ply	ADAMS FRAMING - LOT 10 WISE ESTATES
L230379	T27	HIP	1	1	Job Reference (optional)

Builders FirstSource, Lake City, Fl 32055

6.300 s Apr 19 2006 MiTek Industries, Inc. Mon Mar 12 15:36:41 2007 Page 1

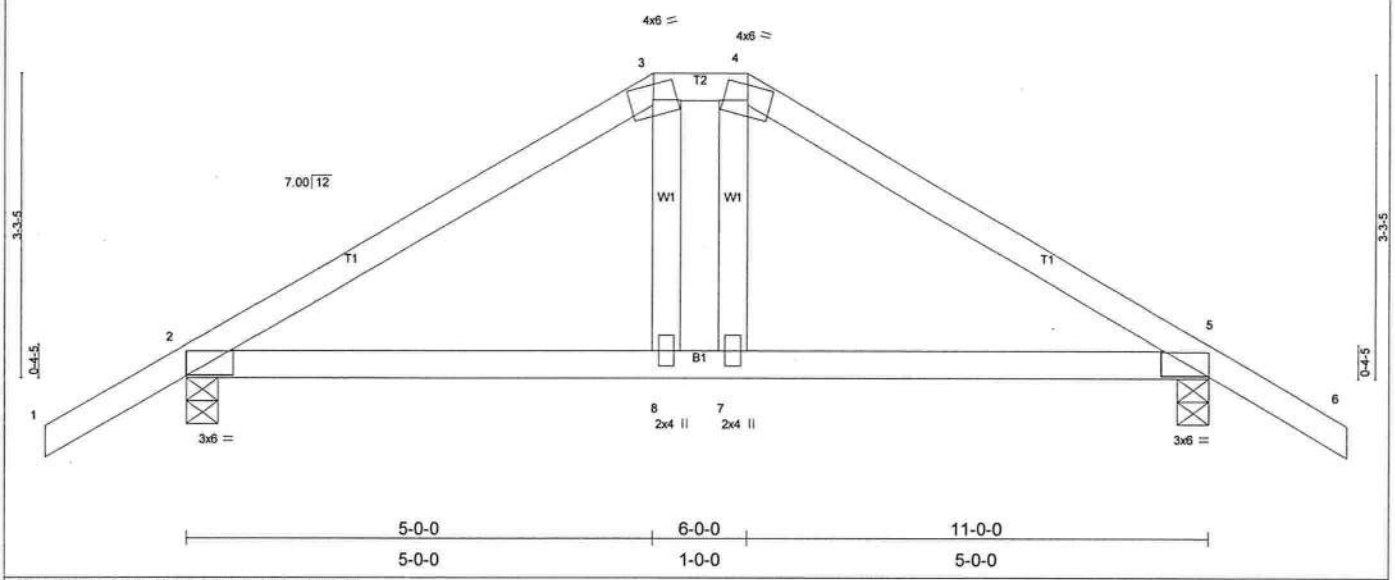

Plate Offsets (X,Y): [2:0-3-3,0-1-8], [5:0-3-3,0-1-8]

LOADING (psf)		SPACING 2-0-0		CSI		DEFL	in	(loc)	l/defl	L/d	PLATES	GRIP
TCLL	20.0	Plates Increase	1.25	TC	0.18	Vert(LL)	0.05	5-7	>999	240	MT20	244/190
TCDL	7.0	Lumber Increase	1.25	BC	0.23	Vert(TL)	-0.05	5-7	>999	180		
BCLL	10.0	Rep Stress Incr	YES	WB	0.06	Horz(TL)	0.01	5	n/a	n/a		
BCDL	5.0	Code FBC2004/TPI2002		(Matrix)							Weight: 49 lb	

LUMBER
TOP CHORD 2 X 4 SYP No.2
BOT CHORD 2 X 4 SYP No.2
WEBS 2 X 4 SYP No.3

BRACING
TOP CHORD Structural wood sheathing directly applied or 6-0-0 oc purlins.
BOT CHORD Rigid ceiling directly applied or 10-0-0 oc bracing.

REACTIONS (lb/size) 2=538/0-4-0, 5=538/0-4-0
Max Horz 2=-108(load case 3)
Max Uplift2=-375(load case 5), 5=-375(load case 6)

FORCES (lb) - Maximum Compression/Maximum Tension
TOP CHORD 1-2=0/40, 2-3=-562/507, 3-4=-428/492, 4-5=-562/507, 5-6=0/40
BOT CHORD 2-8=-311/423, 7-8=-319/428, 5-7=-311/423
WEBS 3-8=-171/175, 4-7=-171/175

JOINT STRESS INDEX
2 = 0.46, 3 = 0.42, 4 = 0.42, 5 = 0.46, 7 = 0.13 and 8 = 0.13

NOTES
1) Unbalanced roof live loads have been considered for this design.
2) Wind: ASCE 7-02; 110mph (3-second gust); h=20ft; TCDL=4.2psf; BCDL=3.0psf; Category II; Exp B; enclosed; MWFRS gable end zone and C-C Interior(1) zone; porch left and right exposed; Lumber DOL=1.60 plate grip DOL=1.60. This truss is designed for C-C for members and forces, and for MWFRS for reactions specified.
3) Provide adequate drainage to prevent water ponding.
4) All bearings are assumed to be SYP No.2 crushing capacity of 565.00 psi
5) Provide mechanical connection (by others) of truss to bearing plate capable of withstanding 375 lb uplift at joint 2 and 375 lb uplift at joint 5.

LOAD CASE(S) Standard

MARCH 13,2007 TRUSS DESIGN ENGINEER:
THOMAS E. MILLER PE 56877, BYRON K. ANDERSON PE 60987
STRUCTURAL ENGINEERING AND INSPECTIONS, INC. EB 9196
16105 N. FLORIDA AVE. STE B, LUTZ, FL 33549

Job	Truss	Truss Type	Qty	Ply	ADAMS FRAMING - LOT 10 WISE ESTATES
L230379	T28	COMMON	1	1	Job Reference (optional)

Builders FirstSource, Lake City, Fl 32055 — 6.300 s Apr 19 2006 MiTek Industries, Inc. Mon Mar 12 15:36:53 2007 Page 1

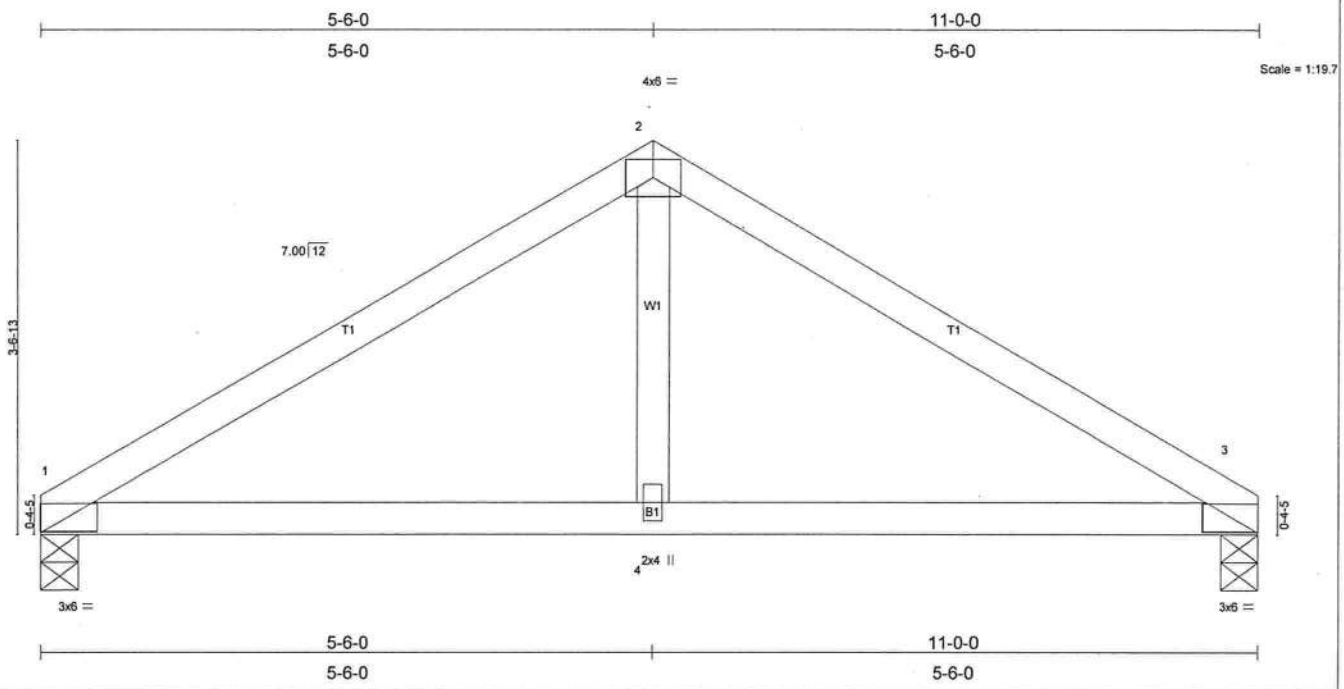

Plate Offsets (X,Y): [1:0-3-3,0-1-8], [3:0-3-3,0-1-8]

LOADING (psf)		SPACING 2-0-0		CSI		DEFL	in	(loc)	l/defl	L/d	PLATES	GRIP
TCLL	20.0	Plates Increase	1.25	TC	0.30	Vert(LL)	0.07	3-4	>999	240	MT20	244/190
TCDL	7.0	Lumber Increase	1.25	BC	0.30	Vert(TL)	-0.06	3-4	>999	180		
BCLL	10.0	Rep Stress Incr	YES	WB	0.07	Horz(TL)	0.01	3	n/a	n/a		
BCDL	5.0	Code FBC2004/TPI2002		(Matrix)							Weight: 40 lb	

LUMBER
TOP CHORD 2 X 4 SYP No.2
BOT CHORD 2 X 4 SYP No.2
WEBS 2 X 4 SYP No.3

BRACING
TOP CHORD Structural wood sheathing directly applied or 6-0-0 oc purlins.
BOT CHORD Rigid ceiling directly applied or 9-5-9 oc bracing.

REACTIONS (lb/size) 1=448/0-4-0, 3=448/0-4-0
Max Horz 1=-113(load case 3)
Max Uplift1=-277(load case 5), 3=-277(load case 6)

FORCES (lb) - Maximum Compression/Maximum Tension
TOP CHORD 1-2=-595/555, 2-3=-595/555
BOT CHORD 1-4=-414/455, 3-4=-414/455
WEBS 2-4=-358/216

JOINT STRESS INDEX
1 = 0.38, 2 = 0.60, 3 = 0.38 and 4 = 0.16

NOTES
1) Unbalanced roof live loads have been considered for this design.
2) Wind: ASCE 7-02; 110mph (3-second gust); h=20ft; TCDL=4.2psf; BCDL=3.0psf; Category II; Exp B; enclosed; MWFRS gable end zone and C-C Interior(1) zone; porch left and right exposed; Lumber DOL=1.60 plate grip DOL=1.60. This truss is designed for C-C for members and forces, and for MWFRS for reactions specified.
3) All bearings are assumed to be SYP No.2 crushing capacity of 565.00 psi
4) Provide mechanical connection (by others) of truss to bearing plate capable of withstanding 277 lb uplift at joint 1 and 277 lb uplift at joint 3.

LOAD CASE(S) Standard

MARCH 13,2007 TRUSS DESIGN ENGINEER:
THOMAS E. MILLER PE 56877, BYRON K. ANDERSON PE 60987
STRUCTURAL ENGINEERING AND INSPECTIONS, INC. EB 9196
16105 N. FLORIDA AVE. STE B, LUTZ, FL 33549

Job	Truss	Truss Type	Qty	Ply	ADAMS FRAMING - LOT 10 WISE ESTATES
L230379	T29	COMMON	1	1	Job Reference (optional)

Builders FirstSource, Lake City, Fl 32055 — 6.300 s Apr 19 2006 MiTek Industries, Inc. Mon Mar 12 15:46:52 2007 Page 1

-1-6-0	5-6-13	10-8-0	15-9-3	21-4-0	22-10-0
1-6-0	5-6-13	5-1-3	5-1-3	5-6-13	1-6-0

Scale = 1:40.2

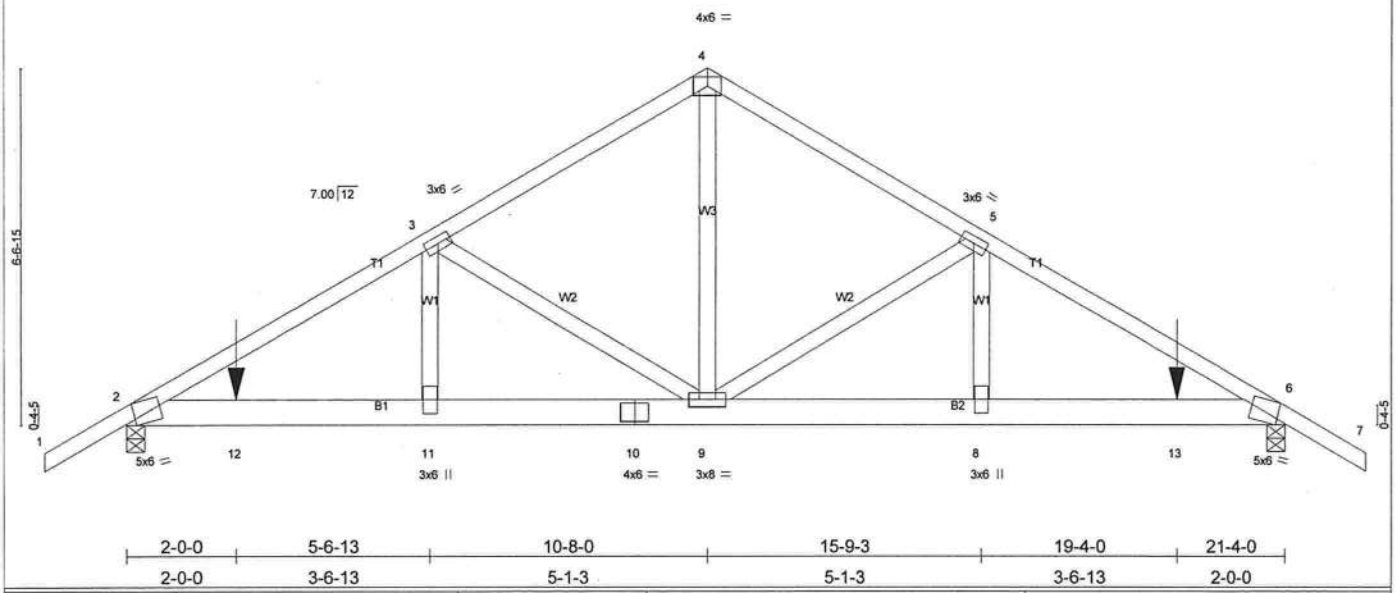

2-0-0	5-6-13	10-8-0	15-9-3	19-4-0	21-4-0
2-0-0	3-6-13	5-1-3	5-1-3	3-6-13	2-0-0

LOADING (psf)		SPACING 2-0-0		CSI		DEFL	in	(loc)	l/defl	L/d	PLATES	GRIP
TCLL	20.0	Plates Increase	1.25	TC	0.53	Vert(LL)	-0.13	2-11	>999	240	MT20	244/190
TCDL	7.0	Lumber Increase	1.25	BC	0.98	Vert(TL)	-0.21	2-11	>999	180		
BCLL	10.0	Rep Stress Incr	NO	WB	0.73	Horz(TL)	0.04	6	n/a	n/a		
BCDL	5.0	Code FBC2004/TPI2002		(Matrix)							Weight: 126 lb	

LUMBER
TOP CHORD 2 X 4 SYP No.2
BOT CHORD 2 X 6 SYP No.1D
WEBS 2 X 4 SYP No.3

BRACING
TOP CHORD Structural wood sheathing directly applied or 3-4-15 oc purlins.
BOT CHORD Rigid ceiling directly applied or 9-0-0 oc bracing.

REACTIONS (lb/size) 2=2372/0-4-0, 6=2372/0-4-0
Max Horz 2=-219(load case 2)
Max Uplift2=-909(load case 4), 6=-909(load case 5)

FORCES (lb) - Maximum Compression/Maximum Tension
TOP CHORD 1-2=0/43, 2-3=-2487/824, 3-4=-1393/515, 4-5=-1393/516, 5-6=-2487/825, 6-7=0/43
BOT CHORD 2-12=-695/2109, 11-12=-695/2109, 10-11=-695/2109, 9-10=-695/2109, 8-9=-611/2109, 8-13=-611/2109, 6-13=-611/2109
WEBS 3-11=-233/855, 3-9=-1164/512, 4-9=-351/1078, 5-9=-1164/513, 5-8=-232/855

JOINT STRESS INDEX
2 = 0.84, 3 = 0.64, 4 = 0.54, 5 = 0.64, 6 = 0.84, 8 = 0.28, 9 = 0.57, 10 = 0.58 and 11 = 0.28

NOTES
1) Unbalanced roof live loads have been considered for this design.
2) Wind: ASCE 7-02; 110mph (3-second gust); h=20ft; TCDL=4.2psf; BCDL=3.0psf; Category II; Exp B; enclosed; MWFRS gable end zone; Lumber DOL=1.60 plate grip DOL=1.60.
3) All bearings are assumed to be SYP No.2 crushing capacity of 565.00 psi
4) Provide mechanical connection (by others) of truss to bearing plate capable of withstanding 909 lb uplift at joint 2 and 909 lb uplift at joint 6.
5) Hanger(s) or other connection device(s) shall be provided sufficient to support concentrated load(s) 1400 lb down and 529 lb up at 2-0-0, and 1400 lb down and 529 lb up at 19-4-0 on bottom chord. The design/selection of such connection device(s) is the responsibility of others.
6) In the LOAD CASE(S) section, loads applied to the face of the truss are noted as front (F) or back (B).

LOAD CASE(S) Standard
1) Regular: Lumber Increase=1.25, Plate Increase=1.25
Uniform Loads (plf)
Vert: 1-4=-54, 4-7=-54, 2-6=-30
Concentrated Loads (lb)
Vert: 12=-1400(F) 13=-1400(F)

MARCH 13,2007 TRUSS DESIGN ENGINEER:
THOMAS E. MILLER PE 56877, BYRON K. ANDERSON PE 60987
STRUCTURAL ENGINEERING AND INSPECTIONS, INC. EB 9196
16105 N. FLORIDA AVE. STE B, LUTZ, FL 33549

Job	Truss	Truss Type	Qty	Ply	ADAMS FRAMING - LOT 10 WISE ESTATES
L230379	T30	COMMON	1	2	Job Reference (optional)

Builders FirstSource, Lake City, Fl 32055

6.300 s Apr 19 2006 MiTek Industries, Inc. Mon Mar 12 15:52:42 2007 Page 1

-1-6-0	5-6-13	10-8-0	15-9-3	21-4-0
1-6-0	5-6-13	5-1-3	5-1-3	5-6-13

Scale = 1:38.2

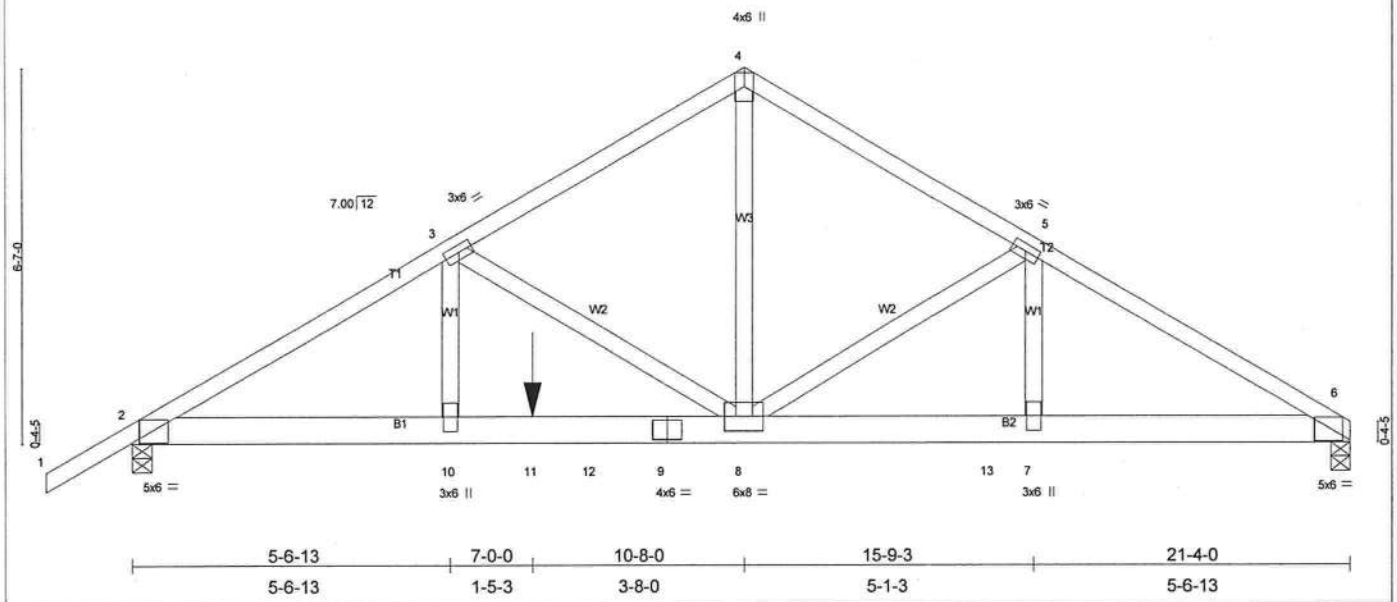

5-6-13	7-0-0	10-8-0	15-9-3	21-4-0
5-6-13	1-5-3	3-8-0	5-1-3	5-6-13

Plate Offsets (X,Y): [2:0-3-0,0-2-11], [6:0-3-0,0-2-11]

LOADING (psf)		SPACING	2-0-0	CSI		DEFL	in	(loc)	l/defl	L/d	PLATES	GRIP
TCLL	20.0	Plates Increase	1.25	TC	0.37	Vert(LL)	-0.14	8-10	>999	240	MT20	244/190
TCDL	7.0	Lumber Increase	1.25	BC	0.58	Vert(TL)	-0.22	8-10	>999	180		
BCLL	10.0	Rep Stress Incr	NO	WB	0.65	Horz(TL)	0.05	6	n/a	n/a		
BCDL	5.0	Code FBC2004/TPI2002		(Matrix)							Weight: 247 lb	

LUMBER
TOP CHORD 2 X 4 SYP No.2
BOT CHORD 2 X 6 SYP No.1D
WEBS 2 X 4 SYP No.3

BRACING
TOP CHORD Structural wood sheathing directly applied or 4-11-3 oc purlins.
BOT CHORD Rigid ceiling directly applied or 10-0-0 oc bracing.

REACTIONS (lb/size) 6=4350/0-4-0, 2=3233/0-4-0
Max Horz 2=236(load case 3)
Max Uplift6=-1635(load case 5), 2=-1253(load case 4)

FORCES (lb) - Maximum Compression/Maximum Tension
TOP CHORD 1-2=0/43, 2-3=-5957/2164, 3-4=-4397/1690, 4-5=-4402/1687, 5-6=-6539/2440
BOT CHORD 2-10=-1859/5048, 10-11=-1859/5048, 11-12=-1859/5048, 9-12=-1859/5048, 8-9=-1859/5048, 8-13=-2020/5585, 7-13=-2020/5585, 6-7=-2020/5585
WEBS 3-10=-437/1388, 3-8=-1555/661, 4-8=-1523/4069, 5-8=-2189/947, 5-7=-712/1982

JOINT STRESS INDEX
2 = 0.82, 3 = 0.74, 4 = 0.47, 5 = 0.74, 6 = 0.82, 7 = 0.32, 8 = 0.51, 9 = 0.75 and 10 = 0.32

NOTES
1) 2-ply truss to be connected together with 10d (0.131"x3") nails as follows:
Top chords connected as follows: 2 X 4 - 1 row at 0-9-0 oc.
Bottom chords connected as follows: 2 X 6 - 2 rows at 0-7-0 oc.
Webs connected as follows: 2 X 4 - 1 row at 0-9-0 oc.
2) All loads are considered equally applied to all plies, except if noted as front (F) or back (B) face in the LOAD CASE(S) section. Ply to ply connections have been provided to distribute only loads noted as (F) or (B), unless otherwise indicated.
3) Unbalanced roof live loads have been considered for this design.
4) Wind: ASCE 7-02; 110mph (3-second gust); h=20ft; TCDL=4.2psf; BCDL=3.0psf; Category II; Exp B; enclosed; MWFRS gable end zone; Lumber DOL=1.60 plate grip DOL=1.60.
5) All bearings are assumed to be SYP No.2 crushing capacity of 565.00 psi
6) Provide mechanical connection (by others) of truss to bearing plate capable of withstanding 1635 lb uplift at joint 6 and 1253 lb uplift at joint 2.
7) Girder carries tie-in span(s): 16-10-0 from 8-0-0 to 15-0-0; 19-2-0 from 15-0-0 to 21-4-0
8) Hanger(s) or other connection device(s) shall be provided sufficient to support concentrated load(s) 1418 lb down and 535 lb up at 7-0-0 on bottom chord. The design/selection of such connection device(s) is the responsibility of others.

LOAD CASE(S) Standard
1) Regular: Lumber Increase=1.25, Plate Increase=1.25
Uniform Loads (plf)
Vert: 1-4=-54, 4-6=-54, 2-12=-30, 12-13=-335(F=-305), 6-13=-384(F=-354)
Concentrated Loads (lb)
Vert: 11=-1418(F)

MARCH 13,2007 TRUSS DESIGN ENGINEER:
THOMAS E. MILLER PE 56877, BYRON K. ANDERSON PE 60987
STRUCTURAL ENGINEERING AND INSPECTIONS, INC. EB 9196
16105 N. FLORIDA AVE. STE B, LUTZ, FL 33549

Job	Truss	Truss Type	Qty	Ply	ADAMS FRAMING - LOT 10 WISE ESTATES
L230379	T31	COMMON	2	1	Job Reference (optional)

Builders FirstSource, Lake City, Fl 32055 — 6.300 s Apr 19 2006 MiTek Industries, Inc. Mon Mar 12 15:52:57 2007 Page 1

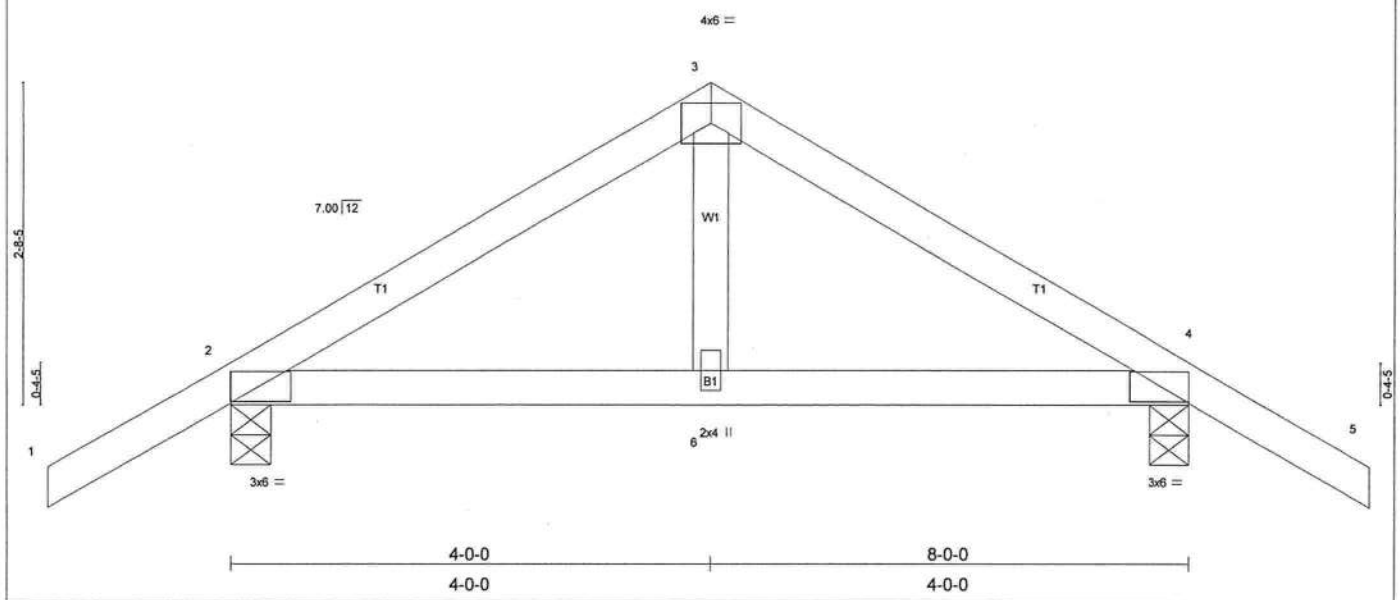

Plate Offsets (X,Y): [2:0-3-3,0-1-8], [4:0-3-3,0-1-8]

LOADING (psf)		SPACING 2-0-0		CSI		DEFL	in	(loc)	l/defl	L/d	PLATES	GRIP
TCLL	20.0	Plates Increase	1.25	TC	0.16	Vert(LL)	-0.01	4-6	>999	240	MT20	244/190
TCDL	7.0	Lumber Increase	1.25	BC	0.10	Vert(TL)	-0.01	4-6	>999	180		
BCLL	10.0	Rep Stress Incr	YES	WB	0.04	Horz(TL)	0.00	4	n/a	n/a		
BCDL	5.0	Code FBC2004/TPI2002		(Matrix)							Weight: 34 lb	

LUMBER
TOP CHORD 2 X 4 SYP No.2
BOT CHORD 2 X 4 SYP No.2
WEBS 2 X 4 SYP No.3

BRACING
TOP CHORD Structural wood sheathing directly applied or 6-0-0 oc purlins.
BOT CHORD Rigid ceiling directly applied or 10-0-0 oc bracing.

REACTIONS (lb/size) 2=412/0-4-0, 4=412/0-4-0
Max Horz 2=87(load case 4)
Max Uplift2=-302(load case 5), 4=-302(load case 6)

FORCES (lb) - Maximum Compression/Maximum Tension
TOP CHORD 1-2=0/40, 2-3=-373/334, 3-4=-373/334, 4-5=0/40
BOT CHORD 2-6=-170/272, 4-6=-170/272
WEBS 3-6=-214/124

JOINT STRESS INDEX
2 = 0.42, 3 = 0.24, 4 = 0.42 and 6 = 0.09

NOTES
1) Unbalanced roof live loads have been considered for this design.
2) Wind: ASCE 7-02; 110mph (3-second gust); h=20ft; TCDL=4.2psf; BCDL=3.0psf; Category II; Exp B; enclosed; MWFRS gable end zone and C-C Interior(1) zone; porch left and right exposed; Lumber DOL=1.60 plate grip DOL=1.60. This truss is designed for C-C for members and forces, and for MWFRS for reactions specified.
3) All bearings are assumed to be SYP No.2 crushing capacity of 565.00 psi
4) Provide mechanical connection (by others) of truss to bearing plate capable of withstanding 302 lb uplift at joint 2 and 302 lb uplift at joint 4.

LOAD CASE(S) Standard

MARCH 13,2007 TRUSS DESIGN ENGINEER:
THOMAS E. MILLER PE 56877, BYRON K. ANDERSON PE 60987
STRUCTURAL ENGINEERING AND INSPECTIONS, INC. EB 9196
16105 N. FLORIDA AVE. STE B, LUTZ, FL 33549

Job	Truss	Truss Type	Qty	Ply	ADAMS FRAMING - LOT 10 WISE ESTATES
L230379	T31G	GABLE	1	1	Job Reference (optional)

Builders FirstSource, Lake City, Fl 32055 — 6.300 s Apr 19 2006 MiTek Industries, Inc. Mon Mar 12 15:53:25 2007 Page 1

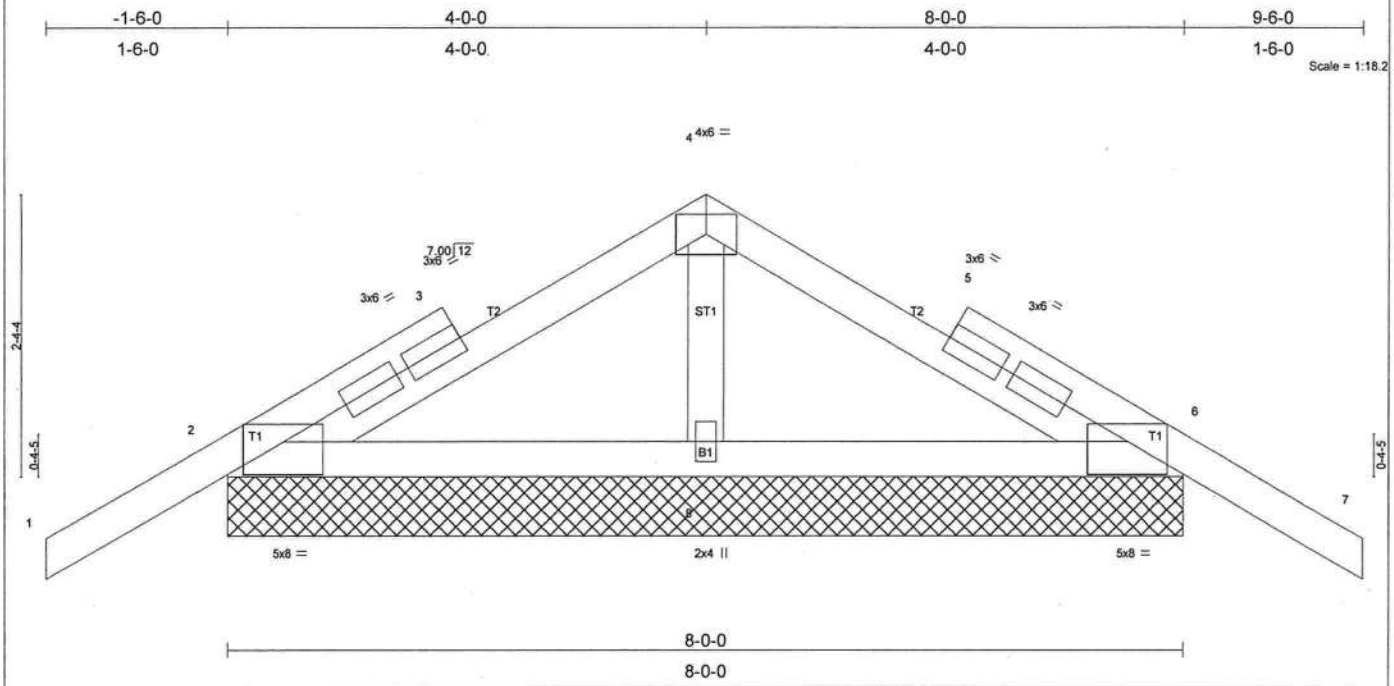

Plate Offsets (X,Y): [2:0-4-0,0-3-5], [6:0-4-0,0-3-5]

LOADING (psf)		SPACING 2-0-0		CSI		DEFL	in	(loc)	l/defl	L/d	PLATES	GRIP
TCLL	20.0	Plates Increase	1.25	TC	0.22	Vert(LL)	-0.00	6	n/r	120	MT20	244/190
TCDL	7.0	Lumber Increase	1.25	BC	0.08	Vert(TL)	-0.00	7	n/r	90		
BCLL	10.0	Rep Stress Incr	NO	WB	0.07	Horz(TL)	0.00	6	n/a	n/a		
BCDL	5.0	Code FBC2004/TPI2002		(Matrix)							Weight: 39 lb	

LUMBER
TOP CHORD 2 X 4 SYP No.2
BOT CHORD 2 X 4 SYP No.2
OTHERS 2 X 4 SYP No.3

BRACING
TOP CHORD Structural wood sheathing directly applied or 8-0-0 oc purlins.
BOT CHORD Rigid ceiling directly applied or 6-0-0 oc bracing.

REACTIONS (lb/size) 2=317/8-0-0, 6=317/8-0-0, 8=562/8-0-0
Max Horz 2=75(load case 4)
Max Uplift2=-192(load case 5), 6=-203(load case 6), 8=-154(load case 5)
Max Grav 2=329(load case 9), 6=329(load case 10), 8=562(load case 1)

FORCES (lb) - Maximum Compression/Maximum Tension
TOP CHORD 1-2=-3/63, 2-3=-31/66, 3-4=-27/159, 4-5=-15/159, 5-6=-15/66, 6-7=-3/63
BOT CHORD 2-8=-61/98, 6-8=-61/98
WEBS 4-8=-422/173

JOINT STRESS INDEX
2 = 0.53, 3 = 0.00, 3 = 0.26, 3 = 0.26, 4 = 0.52, 5 = 0.00, 5 = 0.26, 5 = 0.26, 6 = 0.53 and 8 = 0.15

NOTES
1) Unbalanced roof live loads have been considered for this design.
2) Wind: ASCE 7-02; 110mph (3-second gust); h=20ft; TCDL=4.2psf; BCDL=3.0psf; Category II; Exp B; enclosed; MWFRS gable end zone and C-C Interior(1) zone; porch left and right exposed; Lumber DOL=1.60 plate grip DOL=1.60. This truss is designed for C-C for members and forces, and for MWFRS for reactions specified.
3) Truss designed for wind loads in the plane of the truss only. For studs exposed to wind (normal to the face), see MiTek "Standard Gable End Detail"
4) Gable requires continuous bottom chord bearing.
5) Gable studs spaced at 2-0-0 oc.
6) All bearings are assumed to be SYP No.2 crushing capacity of 565.00 psi
7) Provide mechanical connection (by others) of truss to bearing plate capable of withstanding 192 lb uplift at joint 2, 203 lb uplift at joint 6 and 154 lb uplift at joint 8.
8) In the LOAD CASE(S) section, loads applied to the face of the truss are noted as front (F) or back (B).

LOAD CASE(S) Standard
1) Regular: Lumber Increase=1.25, Plate Increase=1.25
Uniform Loads (plf)
Vert: 1-4=-87(F=-33), 4-7=-87(F=-33), 2-6=-30

MARCH 13,2007 TRUSS DESIGN ENGINEER:
THOMAS E. MILLER PE 56877, BYRON K. ANDERSON PE 60987
STRUCTURAL ENGINEERING AND INSPECTIONS, INC. EB 9196
16105 N. FLORIDA AVE. STE B, LUTZ, FL 33549

Job	Truss	Truss Type	Qty	Ply	ADAMS FRAMING - LOT 10 WISE ESTATES
L230379	V5	VALLEY	1	1	Job Reference (optional)

Builders FirstSource, Lake City, Fl 32055 — 6.300 s Apr 19 2006 MiTek Industries, Inc. Mon Mar 12 15:53:56 2007 Page 1

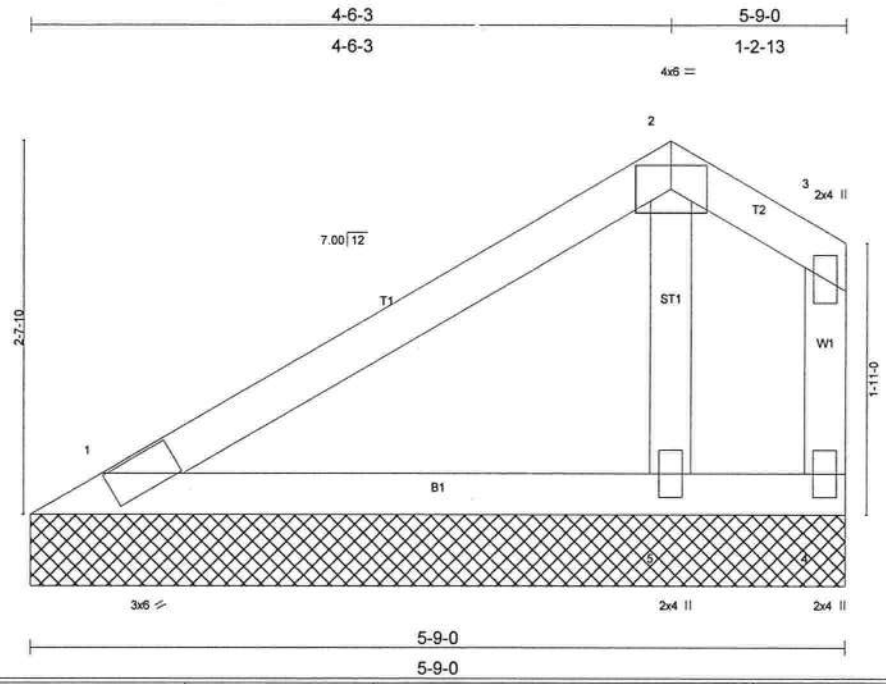

LOADING (psf)		SPACING 2-0-0		CSI		DEFL	in	(loc)	l/defl	L/d	PLATES	GRIP
TCLL	20.0	Plates Increase	1.25	TC	0.19	Vert(LL)	n/a	-	n/a	999	MT20	244/190
TCDL	7.0	Lumber Increase	1.25	BC	0.09	Vert(TL)	n/a	-	n/a	999		
BCLL	10.0	Rep Stress Incr	YES	WB	0.03	Horz(TL)	0.00		n/a	n/a		
BCDL	5.0	Code FBC2004/TPI2002		(Matrix)							Weight: 23 lb	

LUMBER
TOP CHORD 2 X 4 SYP No.2
BOT CHORD 2 X 4 SYP No.2
WEBS 2 X 4 SYP No.3
OTHERS 2 X 4 SYP No.3

BRACING
TOP CHORD Structural wood sheathing directly applied or 5-9-0 oc purlins, except end verticals.
BOT CHORD Rigid ceiling directly applied or 10-0-0 oc bracing.

REACTIONS (lb/size) 1=155/5-9-0, 4=2/5-9-0, 5=268/5-9-0
Max Horz 1=87(load case 5)
Max Uplift1=-46(load case 5), 4=-35(load case 6), 5=-75(load case 5)
Max Grav 1=155(load case 1), 4=2(load case 4), 5=268(load case 1)

FORCES (lb) - Maximum Compression/Maximum Tension
TOP CHORD 1-2=-51/43, 2-3=-12/19, 3-4=-29/29
BOT CHORD 1-5=0/0, 4-5=0/0
WEBS 2-5=-137/101

JOINT STRESS INDEX
1 = 0.04, 2 = 0.05, 3 = 0.02, 4 = 0.02 and 5 = 0.06

NOTES
1) Unbalanced roof live loads have been considered for this design.
2) Wind: ASCE 7-02; 110mph (3-second gust); h=20ft; TCDL=4.2psf; BCDL=3.0psf; Category II; Exp B; enclosed; MWFRS gable end zone and C-C Interior(1) zone; Lumber DOL=1.60 plate grip DOL=1.60. This truss is designed for C-C for members and forces, and for MWFRS for reactions specified.
3) Gable requires continuous bottom chord bearing.
4) All bearings are assumed to be SYP No.2 crushing capacity of 565.00 psi
5) Provide mechanical connection (by others) of truss to bearing plate capable of withstanding 46 lb uplift at joint 1, 35 lb uplift at joint 4 and 75 lb uplift at joint 5.

LOAD CASE(S) Standard

MARCH 13,2007 TRUSS DESIGN ENGINEER:
THOMAS E. MILLER PE 56877, BYRON K. ANDERSON PE 60987
STRUCTURAL ENGINEERING AND INSPECTIONS, INC. EB 9196
16105 N. FLORIDA AVE. STE B, LUTZ, FL 33549

Job	Truss	Truss Type	Qty	Ply	ADAMS FRAMING - LOT 10 WISE ESTATES
L230379	V7	VALLEY	1	1	Job Reference (optional)

Builders FirstSource, Lake City, Fl 32055 — 6.300 s Apr 19 2006 MiTek Industries, Inc. Mon Mar 12 15:54:08 2007 Page 1

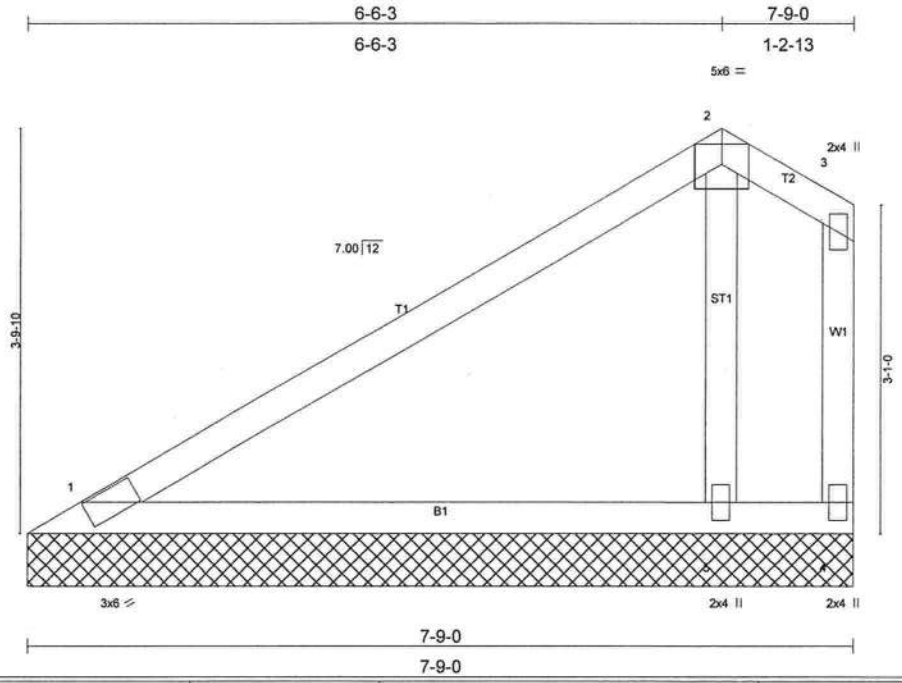

LOADING (psf)		SPACING 2-0-0		CSI		DEFL	in	(loc)	l/defl	L/d	PLATES	GRIP
TCLL	20.0	Plates Increase	1.25	TC	0.34	Vert(LL)	n/a	-	n/a	999	MT20	244/190
TCDL	7.0	Lumber Increase	1.25	BC	0.26	Vert(TL)	n/a	-	n/a	999		
BCLL	10.0	Rep Stress Incr	YES	WB	0.10	Horz(TL)	-0.00	4	n/a	n/a		
BCDL	5.0	Code FBC2004/TPI2002		(Matrix)							Weight: 33 lb	

LUMBER
TOP CHORD 2 X 4 SYP No.2
BOT CHORD 2 X 4 SYP No.2
WEBS 2 X 4 SYP No.3
OTHERS 2 X 4 SYP No.3

BRACING
TOP CHORD Structural wood sheathing directly applied or 7-9-0 oc purlins, except end verticals.
BOT CHORD Rigid ceiling directly applied or 6-0-0 oc bracing.

REACTIONS (lb/size) 1=192/7-9-0, 4=-282/7-9-0, 5=684/7-9-0
Max Horz 1=140(load case 5)
Max Uplift1=-28(load case 5), 4=-306(load case 9), 5=-340(load case 5)
Max Grav 1=192(load case 1), 4=159(load case 5), 5=684(load case 1)

FORCES (lb) - Maximum Compression/Maximum Tension
TOP CHORD 1-2=-91/106, 2-3=-71/118, 3-4=-134/179
BOT CHORD 1-5=-12/4, 4-5=-12/4
WEBS 2-5=-404/318

JOINT STRESS INDEX
1 = 0.52, 2 = 0.65, 3 = 0.31, 4 = 0.29 and 5 = 0.18

NOTES
1) Unbalanced roof live loads have been considered for this design.
2) Wind: ASCE 7-02; 110mph (3-second gust); h=20ft; TCDL=4.2psf; BCDL=3.0psf; Category II; Exp B; enclosed; MWFRS gable end zone and C-C Interior(1) zone; Lumber DOL=1.60 plate grip DOL=1.60. This truss is designed for C-C for members and forces, and for MWFRS for reactions specified.
3) Gable requires continuous bottom chord bearing.
4) All bearings are assumed to be SYP No.2 crushing capacity of 565.00 psi
5) Provide mechanical connection (by others) of truss to bearing plate capable of withstanding 28 lb uplift at joint 1, 306 lb uplift at joint 4 and 340 lb uplift at joint 5.

LOAD CASE(S) Standard

MARCH 13,2007 TRUSS DESIGN ENGINEER:
THOMAS E. MILLER PE 56877, BYRON K. ANDERSON PE 60987
STRUCTURAL ENGINEERING AND INSPECTIONS, INC. EB 9196
16105 N. FLORIDA AVE. STE B, LUTZ, FL 33549

Job	Truss	Truss Type	Qty	Ply	ADAMS FRAMING - LOT 10 WISE ESTATES
L230379	V9	VALLEY	1	1	Job Reference (optional)

Builders FirstSource, Lake City, Fl 32055 — 6.300 s Apr 19 2006 MiTek Industries, Inc. Mon Mar 12 15:58:35 2007 Page 1

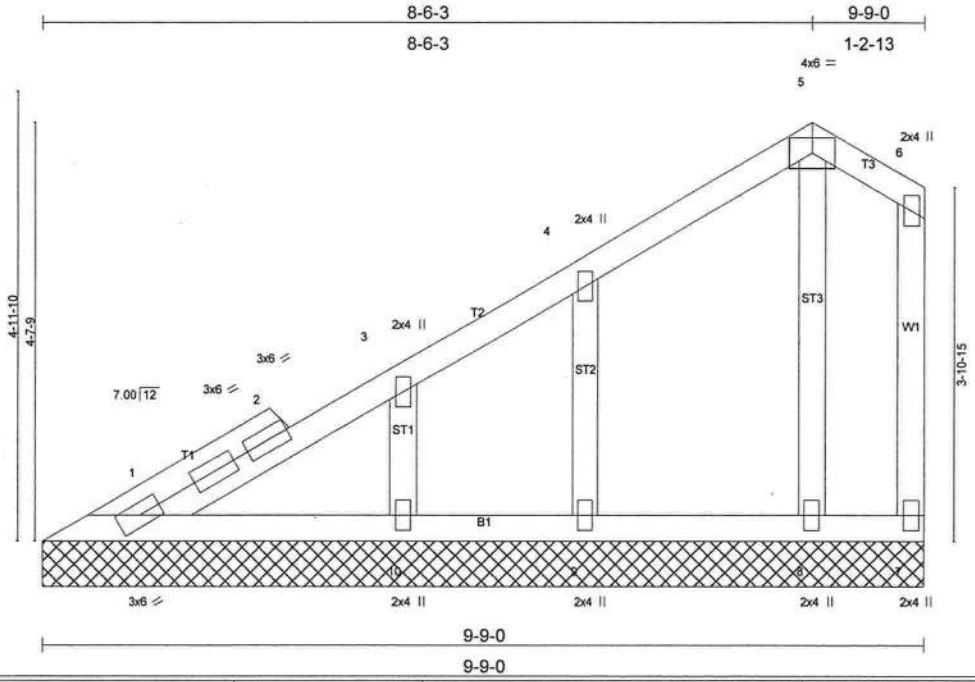

LOADING (psf)		SPACING 2-0-0		CSI		DEFL	in	(loc)	l/defl	L/d	PLATES	GRIP
TCLL	20.0	Plates Increase	1.25	TC	0.07	Vert(LL)	n/a	-	n/a	999	MT20	244/190
TCDL	7.0	Lumber Increase	1.25	BC	0.04	Vert(TL)	n/a	-	n/a	999		
BCLL	10.0	Rep Stress Incr	YES	WB	0.04	Horz(TL)	-0.00	7	n/a	n/a		
BCDL	5.0	Code FBC2004/TPI2002		(Matrix)							Weight: 50 lb	

LUMBER
TOP CHORD 2 X 4 SYP No.2
BOT CHORD 2 X 4 SYP No.2
WEBS 2 X 4 SYP No.3
OTHERS 2 X 4 SYP No.3

BRACING
TOP CHORD Structural wood sheathing directly applied or 6-0-0 oc purlins, except end verticals.
BOT CHORD Rigid ceiling directly applied or 10-0-0 oc bracing.

REACTIONS (lb/size) 1=104/9-9-0, 7=17/9-9-0, 9=181/9-9-0, 8=179/9-9-0, 10=232/9-9-0
Max Horz 1=179(load case 5)
Max Uplift7=-19(load case 3), 9=-104(load case 5), 8=-62(load case 5), 10=-130(load case 5)
Max Grav 1=104(load case 1), 7=30(load case 10), 9=182(load case 9), 8=179(load case 1), 10=232(load case 1)

FORCES (lb) - Maximum Compression/Maximum Tension
TOP CHORD 1-2=-168/39, 2-3=-161/46, 3-4=-88/36, 4-5=-36/33, 6-7=-25/20, 5-6=-13/22
BOT CHORD 1-10=-1/1, 9-10=-1/1, 8-9=-1/1, 7-8=-1/1
WEBS 4-9=-120/120, 5-8=-113/77, 3-10=-148/135

JOINT STRESS INDEX
1 = 0.16, 2 = 0.00, 2 = 0.11, 2 = 0.11, 3 = 0.07, 4 = 0.06, 5 = 0.11, 6 = 0.02, 7 = 0.02, 8 = 0.04, 9 = 0.07 and 10 = 0.08

NOTES
1) Unbalanced roof live loads have been considered for this design.
2) Wind: ASCE 7-02; 110mph (3-second gust); h=20ft; TCDL=4.2psf; BCDL=3.0psf; Category II; Exp B; enclosed; MWFRS gable end zone and C-C Interior(1) zone; Lumber DOL=1.60 plate grip DOL=1.60. This truss is designed for C-C for members and forces, and for MWFRS for reactions specified.
3) Gable requires continuous bottom chord bearing.
4) All bearings are assumed to be SYP No.2 crushing capacity of 565.00 psi
5) Provide mechanical connection (by others) of truss to bearing plate capable of withstanding 19 lb uplift at joint 7, 104 lb uplift at joint 9, 62 lb uplift at joint 8 and 130 lb uplift at joint 10.

LOAD CASE(S) Standard

MARCH 13,2007 TRUSS DESIGN ENGINEER:
THOMAS E. MILLER PE 56877, BYRON K. ANDERSON PE 60987
STRUCTURAL ENGINEERING AND INSPECTIONS, INC. EB 9196
16105 N. FLORIDA AVE. STE B, LUTZ, FL 33549

Symbols

PLATE LOCATION AND ORIENTATION

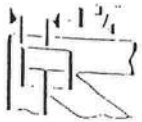

* Center plate on joint unless dimensions indicate otherwise. Dimensions are in inches. Apply plates to both sides of truss and securely seat.

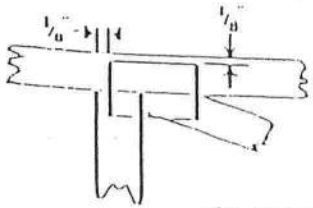

* For 4 x 2 orientation, locate plates 1/8" from outside edge of truss and vertical web.

* This symbol indicates the required direction of slots in connector plates

PLATE SIZE

4 X 4

The first dimension is the width perpendicular to slots. Second dimension is the length parallel to slots.

LATERAL BRACING

Indicates location of required continuous lateral bracing.

BEARING

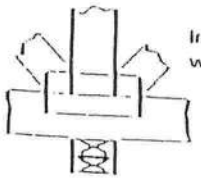

Indicates location of joints at which bearings (supports) occur.

Numbering System

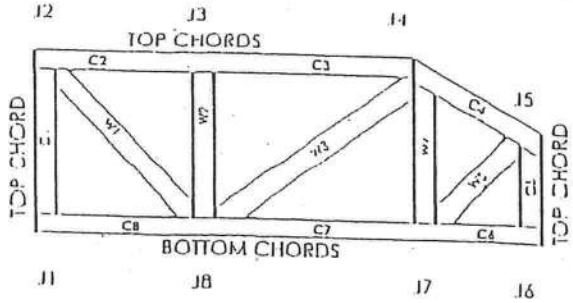

JOINTS AND CHORDS ARE NUMBERED CLOCKWISE AROUND THE TRUSS STARTING AT THE LOWEST JOINT FARTHEST TO THE LEFT.

WEBS ARE NUMBERED FROM LEFT TO RIGHT

CONNECTOR PLATE CODE APPROVALS

BOCA	96-31, 96-67
ICBO	3907, 4922
SBCCI	9667, 9432A
WISC/DILHR	960022-W, 970036-H
HER	561

HiTek Engineering Reference Sheet: MII-7473

General Safety Notes

Failure to Follow Could Cause Property Damage or Personal Injury

1. Provide copies of this truss design to the building designer, erection supervisor, property owner and all other interested parties.
2. Cut members to bear tightly against each other.
3. Place plates on each face of truss at each joint and embed fully. Avoid knots and wane at joint locations.
4. Unless otherwise noted, locate chord splices at ¼ panel length (± 6" from adjacent joint.)
5. Unless otherwise noted, moisture content of lumber shall not exceed 19% at time of fabrication.
6. Unless expressly noted, this design is not applicable for use with fire retardant or preservative treated lumber.
7. Camber is a non-structural consideration and is the responsibility of truss fabricator. General practice is to camber for dead load deflection.
8. Plate type, size and location dimensions shown indicate minimum plating requirements.
9. Lumber shall be of the species and size, and in all respects, equal to or better than the grade specified.
10. Top chords must be sheathed or purlins provided at spacing shown on design.
11. Bottom chords require lateral bracing at 10 ft. spacing, or less, if no ceiling is installed, unless otherwise noted.
12. Anchorage and / or load transferring connections to trusses are the responsibility of others unless shown.
13. Do not overload roof or floor trusses with stacks of construction materials.
14. Do not cut or alter truss member or plate without prior approval of a professional engineer.
15. Care should be exercised in handling, erection and installation of trusses.

New Construction Subterranean Termite Soil Treatment Record

OMB Approval No. 2502-0525

This form is completed by the licensed Pest Control Company.

Public reporting burden for this collection of information is estimated to average 15 minutes per response, including the time for reviewing instructions, searching existing data sources, gathering and maintaining the data needed, and completing and reviewing the collection of information. This information is mandatory and is required to obtain benefits. HUD may not collect this information, and you are not required to complete this form, unless it displays a currently valid OMB control number.
Section 24 CFR 200.926d(b)(3) requires that the sites for HUD insured structures must be free of termite hazards. This information collection requires the builder to certify that an authorized Pest Control company performed all required treatment for termites, and that the builder guarantees the treated area against infestation for one year. Builders, pest control companies, mortgage lenders, homebuyers, and HUD as a record of treatment for specific homes will use the information collected. The information is not considered confidential.

This report is submitted for informational purposes to the builder on proposed (new) construction cases when soil treatment for prevention of subterranean termite infestation is specified by the builder, architect, or required by the lender, architect, FHA, or VA.

All contracts for services are between the Pest Control Operator and builder, unless stated otherwise.

25673

Section 1: General Information (Treating Company Information)

Company Name: Aspen Pest Control, Inc.
Company Address: 321 N.W. Cole Terrace, Suite 107 City Lake City State FL Zip 32055
Company Business License No. JB102476 Company Phone No. 386-755-3811 • 352-494-5751
FHA/VA Case No. (if any)

Section 2: Builder Information

Company Name: Adam Peplia Company Phone No.

Section 3: Property Information

Location of Structure(s) Treated (Street Address or Legal Description, City, State and Zip) 147 SW Wise Drive Lake City, FL

Type of Construction (More than one box may be checked) ☑ Slab ☐ Basement ☐ Crawl ☐ Other
Approximate Depth of Footing: Outside 12 Inside 12 Type of Fill Dirt

Section 4: Treatment Information

Date(s) of Treatment(s) 4-9-07
Brand Name of Product(s) Used Biflex XTS
EPA Registration No. 53447-184
Approximate Final Mix Solution % .06
Approximate Size of Treatment Area: Sq. ft. 2247 Linear ft. 247 Linear ft. of Masonry Voids 247
Approximate Total Gallons of Solution Applied 500
Was treatment completed on exterior? ☐ Yes ☑ No
Service Agreement Available? ☑ Yes ☐ No Upon Completion
Note: Some state laws require service agreements to be issued. This form does not preempt state law.

Attachments (List)

Comments Treated Main body, Garage + 2 Porches

Name of Applicator(s) Steve Brannan Certification No. (if required by State law)

The applicator has used a product in accordance with the product label and state requirements. All treatment materials and methods used comply with state and federal regulations.

Authorized Signature Date 4-9-07

Warning: HUD will prosecute false claims and statements. Conviction may result in criminal and/or civil penalties. (18 U.S.C. 1001, 1010. 1012; 31 U.S.C. 3729, 3802)

Donald F. Lee & Associates, Inc.

25673

Surveyors & Engineers

D.F.L.

140 NW Ridgewood Avenue
Lake City, Florida 32055
(386) 755-6166
Fax (386) 755-6167
donald@dlfa.com

Tuesday, April 10, 2007

FROM: Tim Delbene, P.L.S.

TO: Columbia County Building & Zoning Dept.

CC: Adams Framing

RE: Foundation Elevation Check – Lot 2, Block B, Wise Estates

We have obtained elevations on a foundation under construction on the above referenced lot. The elevations are based on Local Benchmark Datum. The results are as follows:

Floor Elevation (at Stemwall): 99.72'

Porch Elevations (at Stemwall): 99.07'

Highest Adjacent Grade (HAG): 98.75'

Lowest Adjacent Grade (LAG): 97.18'

The record subdivision plat for Wise Estates indicates a minimum floor elevation of 99.00' for the subject Lot 2, Block B.

SIGNED: Timothy A. Delbene

Timothy A. Delbene, P.L.S.
Florida Reg. Cert. No. 5594

DATE: 4 / 10 /2007.

CERTIFICATE OF

OCCUPANCY

COLUMBIA COUNTY, FLORIDA

Department of Building and Zoning Inspection

This Certificate of Occupancy is issued to the below named permit holder for the building and premises at the below named location, and certifies that the work has been completed in accordance with the Columbia County Building Code.

Parcel Number 24-4S-16-03113-122 **Building permit No.** 000025673

Use Classification SFD,UTILITY **Fire:** 16.74

Permit Holder ADAM PAPKA **Waste:** 50.25

Owner of Building ADAM'S FRAMING & CONSTRUCTION **Total:** 66.99

Location: 147 SW WISE DRIVE, LAKE CITY, FL

Date: 07/18/2007

Harry Dicks

Building Inspector

POST IN A CONSPICUOUS PLACE
(Business Places Only)

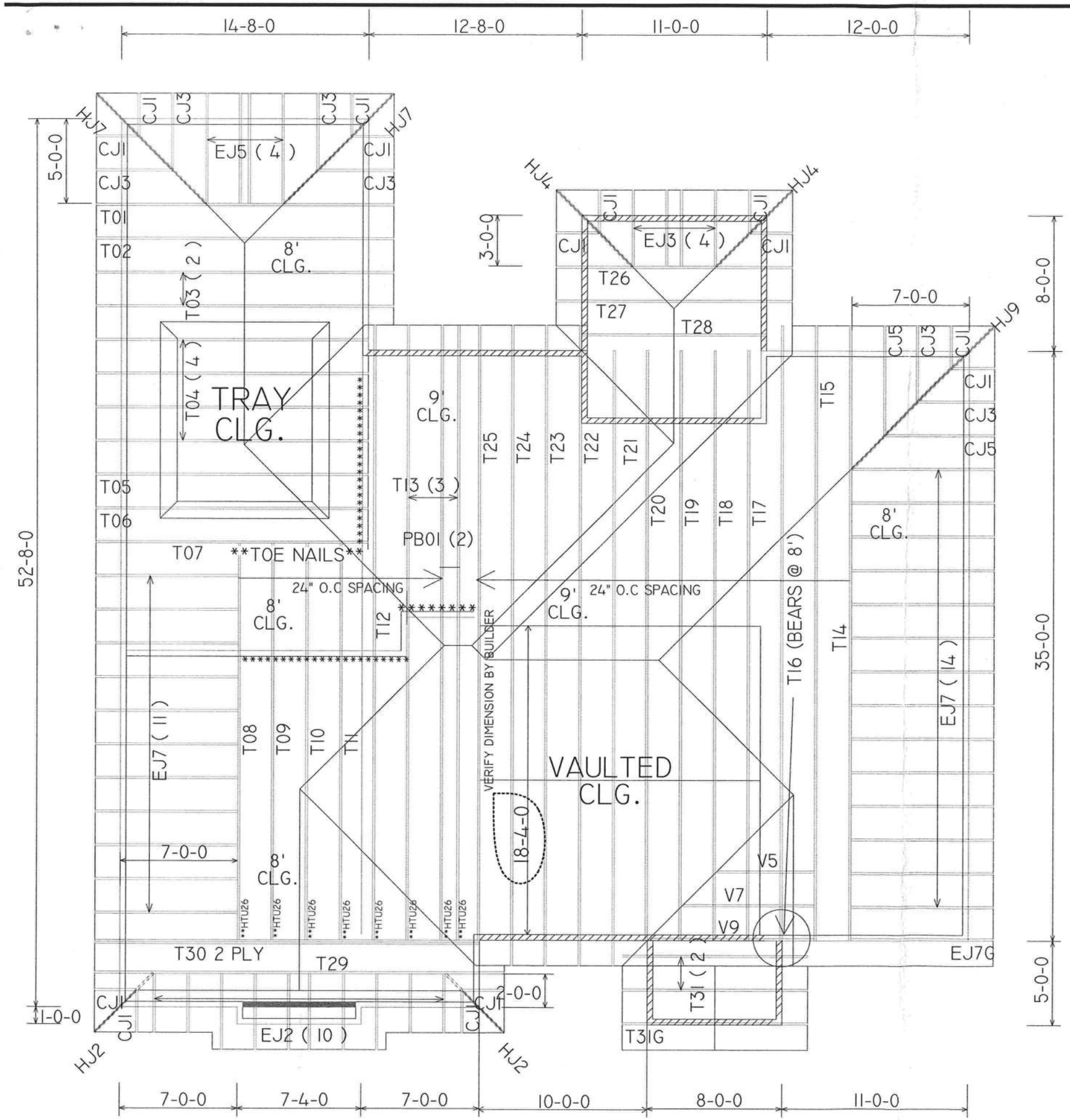

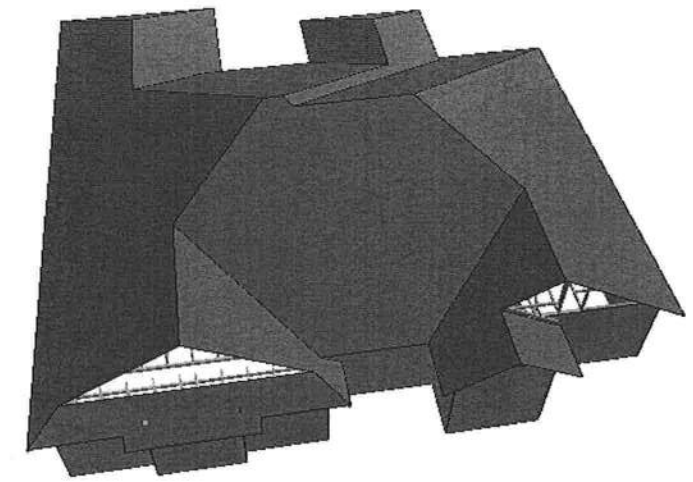

******** - DENOTES

INTERIOR LOAD

BEARING WALLS

BEARING HEIGHT SCHEDULE

8'

9'

18" O/H
7/12

NOTES:

1.) REFER TO HIB 91 (RECOMMENDATIONS FOR HANDLING INSTALLATION AND TEMPORARY BRACING.) REFER TO ENGINEERED DRAWINGS FOR PERMANENT BRACING REQUIRED.

2.) ALL TRUSSES (INCLUDING TRUSSES UNDER VALLEY FRAMING) MUST BE COMPLETELY DECKED OR REFER TO DETAIL V105 FOR ALTERNATE BRACING REQUIREMENTS.

3.) ALL VALLEYS ARE TO BE CONVENTIONALLY FRAMED BY BUILDER.

4.) ALL TRUSSES ARE DESIGNED FOR 2' o.c. MAXIMUM SPACING, UNLESS OTHERWISE NOTED.

5.) ALL WALLS SHOWN ON PLACEMENT PLAN ARE CONSIDERED TO BE LOAD BEARING, UNLESS OTHERWISE NOTED.

6.) SY42 TRUSSES MUST BE INSTALLED WITH THE TOP BEING UP.

7.) ALL ROOF TRUSS HANGERS TO BE SIMPSON HUS26 UNLESS OTHERWISE NOTED. ALL FLOOR TRUSS HANGERS TO BE SIMPSON THA422 UNLESS OTHERWISE NOTED.

8.) BEAM/HEADER/LINTEL (HDR) TO BE FURNISHED BY BUILDER.

SHOP DRAWING APPROVAL

THIS LAYOUT IS THE SOLE SOURCE FOR FABRICATION OF TRUSSES AND VOIDS ALL PREVIOUS ARCHITECTURAL OR OTHER TRUSS LAYOUTS. REVIEW AND APPROVAL OF THIS LAYOUT MUST BE RECEIVED BEFORE ANY TRUSSES WILL BE BUILT. VERIFY ALL CONDITIONS TO INSURE AGAINST CHANGES THAT WILL RESULT IN EXTRA CHARGES TO YOU.

Requested Delivery Date: _____

Approved by: _____ Date: _____

Builders FirstSource
Bunnell
PHONE: 904-437-3349 FAX: 904-437-3994
Jacksonville
PHONE: 904-772-6100 FAX: 904-772-1973
Lake City
PHONE: 904-755-6894 FAX: 904-755-7973
Sanford
PHONE: 407-322-0059 FAX: 407-322-5553

BUILDER: ADAM'S FRAMING

LEGAL ADDRESS: LOT 28 WISE ESTATES

MODEL:		REVISION:
		SCALE: NTS
DATE: 3/12/07	DRAWN BY: WWL	JOB #: L230379