DATE 10/24/2005

Columbia County Building Permit

This Permit Expires One Year From the Date of Issue

PERMIT
000023756

APPLICANT JONATHAN PERRY PHONE 719-7192

ADDRESS 373 NW OLD MILL DR LAKE CITY FL 32024

OWNER DONNIE WILLIAMS PHONE 755-0764

ADDRESS 217 LANCELOT GLEN LAKE CITY FL 32024

CONTRACTOR JONATHAN PERRY PHONE 719-7192

LOCATION OF PROPERTY 341, R INTO STONEHENG S/D, R ON LANCELOT GLEN, 5TH LOT ON LEFT

TYPE DEVELOPMENT SFD,UTILITY ESTIMATED COST OF CONSTRUCTION 96700.00

HEATED FLOOR AREA 1934.00 TOTAL AREA 2887.00 HEIGHT 20.00 STORIES 1

FOUNDATION CONCRETE WALLS FRAMED ROOF PITCH 6/12 FLOOR SLAB

LAND USE & ZONING RSF-2 MAX. HEIGHT 35

Minimum Set Back Requirments: STREET-FRONT 25.00 REAR 15.00 SIDE 10.00

NO. EX.D.U. 0 FLOOD ZONE XPP DEVELOPMENT PERMIT NO.

PARCEL ID 23-4S-16-03099-218 SUBDIVISION STONEHENGE

LOT 18 BLOCK PHASE 2 UNIT TOTAL ACRES 1.01

000000857		CBC058042		
Culvert Permit No.	Culvert Waiver	Contractor's License Number	Applicant/Owner/Contractor	
PERMIT	05-0990-N	BK	JH	N
Driveway Connection	Septic Tank Number	LU & Zoning checked by	Approved for Issuance	New Resident

COMMENTS: SEE ENGINEER ELEVATION LETTER, MINIMUN FINISHED FLOOR ELEVATION IS TO BE THE HIGHER OF 12" ABOVE HIGHEST ADJ. EXISTING GROUND ELEVATION OR 18" ABOVE EAST END OF PAVEMENT ADJ. TO RETENTION POND, NOC ON FILE Check # or Cash 1001

FOR BUILDING & ZONING DEPARTMENT ONLY

(footer/Slab)

Temporary Power _____ date/app. by Foundation _____ date/app. by Monolithic _____ date/app. by

Under slab rough-in plumbing _____ date/app. by Slab _____ date/app. by Sheathing/Nailing _____ date/app. by

Framing _____ date/app. by Rough-in plumbing above slab and below wood floor _____ date/app. by

Electrical rough-in _____ date/app. by Heat & Air Duct _____ date/app. by Peri. beam (Lintel) _____ date/app. by

Permanent power _____ date/app. by C.O. Final _____ date/app. by Culvert _____ date/app. by

M/H tie downs, blocking, electricity and plumbing _____ date/app. by Pool _____ date/app. by

Reconnection _____ date/app. by Pump pole _____ date/app. by Utility Pole _____ date/app. by

M/H Pole _____ date/app. by Travel Trailer _____ date/app. by Re-roof _____ date/app. by

BUILDING PERMIT FEE $ 485.00 CERTIFICATION FEE $ 14.44 SURCHARGE FEE $ 14.44

MISC. FEES $ .00 ZONING CERT. FEE $ 50.00 FIRE FEE $ .00 WASTE FEE $

FLOOD DEVELOPMENT FEE $ FLOOD ZONE FEE $ 25.00 CULVERT FEE $ 25.00 **TOTAL FEE** 613.88

INSPECTORS OFFICE CLERKS OFFICE

NOTICE: IN ADDITION TO THE REQUIREMENTS OF THIS PERMIT, THERE MAY BE ADDITIONAL RESTRICTIONS APPLICABLE TO THIS PROPERTY THAT MAY BE FOUND IN THE PUBLIC RECORDS OF THIS COUNTY. AND THERE MAY BE ADDITIONAL PERMITS REQUIRED FROM OTHER GOVERNMENTAL ENTITIES SUCH AS WATER MANAGEMENT DISTRICTS, STATE AGENCIES, OR FEDERAL AGENCIES.

"WARNING TO OWNER: YOUR FAILURE TO RECORD A NOTICE OF COMMENCEMENT MAY RESULT IN YOUR PAYING TWICE FOR IMPROVEMENTS TO YOUR PROPERTY. IF YOU INTEND TO OBTAIN FINANCING, CONSULT WITH YOUR LENDER OR AN ATTORNEY BEFORE RECORDING YOUR NOTICE OF COMMENCEMENT."

This Permit Must Be Prominently Posted on Premises During Construction

PLEASE NOTIFY THE COLUMBIA COUNTY BUILDING DEPARTMENT AT LEAST 24 HOURS IN ADVANCE OF EACH INSPECTION, IN ORDER THAT IT MAY BE MADE WITHOUT DELAY OR INCONVIENCE, PHONE 758-1008. THIS PERMIT IS NOT VALID UNLESS THE WORK AUTHORIZED BY IT IS COMMENCED WITHIN 6 MONTHS AFTER ISSUANCE.

The Issuance of this Permit Does Not Waive Compliance by Permittee with Deed Restrictions.

ELK

PRESTIQUE®
HIGH DEFINITION®

RAISED PROFILE™

Prestique Plus *High Definition* and Prestique Gallery Collection™

Product size	13¼"x 39⅜"
Exposure	5⅝"
Pieces/Bundle	16
Bundles/Square	4/98.5 sq.ft.
Squares/Pallet	11

50-year limited warranty period: *non-prorated coverage for* shingles and application labor for the initial 5 years, plus an option for transferability*; prorated coverage for application labor and shingles for balance of limited *warranty period; 5-year limited* wind warranty*.

Prestique I *High Definition*

Product size	13¼"x 39⅜"
Exposure	5⅝"
Pieces/Bundle	16
Bundles/Square	4/98.5 sq.ft.
Squares/Pallet	14

40-year limited warranty period: non-prorated coverage for shingles and application labor for the initial 5 years, plus an option for transferability*; prorated coverage for application labor and shingles for balance of limited warranty period; 5-year limited wind warranty*.

Prestique *High Definition*

Product size	13¼"x 38⅜"
Exposure	5⅝"
Pieces/Bundle	22
Bundles/Square	3/100 sq.ft.
Squares/Pallet	16

30-year limited warranty period: non-prorated coverage for shingles and application labor for the initial 5 years, plus an option for transferability*; prorated coverage for application labor and shingles for balance of limited warranty period; 5-year limited wind warranty*.

Raised Profile

Product size	13¼"x 38⅜"
Exposure	5⅝"
Pieces/Bundle	22
Bundles/Square	3/100 sq.ft.
Squares/Pallet	16

30-year limited warranty period: non-prorated coverage for shingles and application labor for the initial 5 years, plus an option for transferability*; prorated coverage for application labor and shingles for balance of limited *warranty period; 5-year limited* wind warranty*.

HIP AND RIDGE SHINGLES

Seal-A-Ridge® w/FLX™

Size: 12"x 12"
Exposure: 6½"
Pieces/Bundle: 45
Coverage: 4 Bundles = 100 linear feet

Elk Starter Strip

52 Bundles/Pallet
16 Pallets/Truck
936 Bundles/Truck
19 Pieces/Bundle
1 Bundle = 120.33 linear feet

Available Colors: Antique Slate, Weatheredwood, Shakewood, Sablewood, Hickory, Barkwood**, Forest Green, Wedgewood**, Birchwood**, Sandalwood. Gallery Collection: Balsam Forest™, Weathered Sage™, Sienna Sunset™.

All Prestique, Raised Profile and Seal-A-Ridge roofing products contain Elk WindGuard® sealant. WindGuard activates with the sun's heat, bonding shingles into a wind and weather resistant cover that resists blow-offs and leaks.

Check for availability with built-in StainGuard® treatment to inhibit the discoloration of roofing granules caused by the growth of certain types of algae. Not *available in Sablewood.*

All Prestique and Raised Profile shingles meet UL® Wind Resistant (UL 997) and Class "A" Fire Ratings (UL 790); and ASTM Specifications D 3018, Type-I; D 3161, Type-I; E 108 and the requirements of ASTM D 3462.

All Prestique and Raised Profile shingles meet the latest Metro Dade building code requirements.

***See actual limited warranty for conditions and limitations.**
****Check for product availability.**

SPECIFICATIONS

SCOPE: *Work includes furnishing all labor, materials and* equipment necessary to complete installation of (name) shingles specified herein. Color shall be (name of color). Hip and ridge type to be Elk Seal-A-Ridge with formula *FLX.*

All exposed metal surfaces (flashing, vents, etc.) to be painted with matching Elk roof accessory paint.

PREPARATION OF ROOF DECK: Roof deck to be dry, well-

MATERIALS: *Underlayment for standard roof slopes, 4" per* foot (101.6/304.8mm) or greater: apply non-perforated No. 15 or 30 asphalt-saturated felt underlayment. For low slopes [4" per foot (101.6/304.8mm) to a minimum of 2" per foot (50.8/304.8mm)], use two plies of underlayment overlapped a minimum of 19". Fasteners shall be of sufficient length and holding power for securing material as required by the application instructions printed on shingle wrapper.

warranties are contingent upon the correct installation as shown on the instructions. These instructions are the minimum required to meet Elk application requirements. In some areas, building codes may require additional application techniques or methods beyond our instructions. In these cases, the local code must be followed. Under no circumstances will Elk accept application requirements less than those contained in its application instructions.

X
Opaque Inswing Unit

COP-WL-JH4101-02

WOOD-EDGE STEEL DOORS

APPROVED ARRANGEMENT:

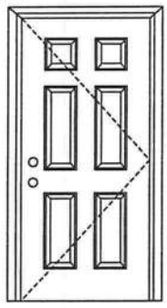

Note:
Units of other sizes are covered by this report as long as the panel used does not exceed 3'0" x 6'8".

Warnock Hersey

Test Data Review Certificate #3026447A and COP/Test Report Validation Matrix #3026447A-001 provides additional information - available from the ITS/WH website (www.etlsemko.com), the Masonite website (www.masonite.com) or the Masonite technical center.

Single Door
Maximum unit size = 3'0" x 6'8"

Design Pressure

+66.0/-66.0
limited water unless special threshold design is used.

Large Missile Impact Resistance

Hurricane protective system (shutters) is NOT REQUIRED.

Actual design pressure and impact resistant requirements for a specific building design and geographic location is determined by ASCE 7-national, state or local building codes specify the edition required.

MINIMUM ASSEMBLY DETAIL:

Compliance requires that minimum assembly details have been followed – see MAD-WL-MA0001-02.

MINIMUM INSTALLATION DETAIL:

Compliance requires that minimum installation details have been followed – see MID-WL-MA0001-02.

APPROVED DOOR STYLES:

Flush

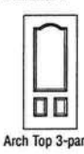
Arch Top 3-panel

3-panel

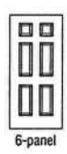
6-panel

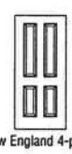
New England 4-panel

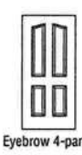
Eyebrow 4-panel

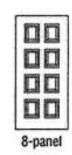
8-panel

9-panel

15-panel

5-panel

5-panel with scroll

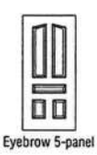
Eyebrow 5-panel

Eyebrow 5-panel with scroll

Johnson™ EntrySystems

June 17, 2002
Our continuing program of product improvement makes specifications, design and product detail subject to change without notice.

PREMDOR Collection Premium Quality Doors
Exclusively from Masonite®
Masonite International Corporation

X
Opaque Inswing Unit

COP-WL-JH4101-02

WOOD-EDGE STEEL DOORS

CERTIFIED TEST REPORTS:

NCTL 210-2185-1, 2, 3

Certifying Engineer and License Number: Barry D. Portney, P.E. / 16258.

Unit Tested in Accordance with Miami-Dade BCCO PA201, PA202 and PA203.

Door panels constructed from 26-gauge 0.017" thick steel skins. Both stiles constructed from wood. Top end rails constructed of 0.041" steel. Bottom end rails constructed of 0.021" steel. Interior cavity of slab filled with rigid polyurethane foam core.

Frame constructed of wood with an extruded aluminum threshold.

PRODUCT COMPLIANCE LABELING:

TESTED IN ACCORDANCE WITH
MIAMI-DADE BCCO
PA201, PA202 & PA203

COMPANY NAME
CITY, STATE

To the best of my knowledge and ability the above side-hinged exterior door unit conforms to the requirements of the 2001 Florida Building Code, Chapter 17 (Structural Tests and Inspections).

Kurt L Bath

State of Florida, Professional Engineer
Kurt Balthazor, P.E. – License Number 56533

Warnock Hersey

Test Data Review Certificate #3026447A and COP/Test Report Validation Matrix #3026447A-001 provides additional information - available from the ITS/WH website (www.etlsemko.com), the Masonite website (www.masonite.com) or the Masonite technical center.

Johnson™ EntrySystems

June 17, 2002
Our continuing program of product improvement makes specifications, design and product detail subject to change without notice.

PREMDOR Collection Premium Quality Doors

Exclusively from Masonite®
Masonite International Corporation

1. PROJECT DATA

Project:	AAMA 450-00 Performance Test Series 3180 Fixed / 3950 Twin Single Hung
Dates of Testing:	October 23, 2003
Tested For:	Action Windoor Technologies 1312 Crosby Rd Carrollton, TX 75006

Witnessed By: (All or Partial Viewing)

Tony Rodriquez	Action Windoor Technologies
Jay Halsey	Action Windoor Technologies
Wesley A. Wilson	Construction Consulting Laboratory, *International*

2. INTRODUCTION

This report presents the performance results of Action Windoor Technologies Series 3180 PVC Fixed over Series 3950 PVC Twin Single Hung. Tests were conducted at Construction Consulting Laboratory, *International*, (**CCLI**) testing facility in Carrollton, TX.

3. SCOPE

CCLI was requested to report the testing results for an Action Windoor Technologies Series 3180 / 3950. Tests were conducted in accordance with AAMA 450-00 and ASTM E 330-02.

4. SUMMARY

Action Windoor Technologies Series 3180 / 3950 was tested in accordance AAMA 450-00 and ASTM E 330-02 and achieved a Design 50 rating.

5. TEST SPECIMEN

PRODUCT TYPE:	PVC Fixed over PVC Twin Single Hung, **Photograph, Appendix B, and Product Drawings, Appendix A**
SERIES/MODEL:	Action Series 3180 fixed and Series 3950 Hung
SPECIFICATION:	AAMA 405-00
OVERALL SIZE:	5'-11 ¾" X 8'-11 $^{15}/_{16}$"
FIXED SIZE:	5'-11 ¾" X 3'-0"
HUNG SIZE:	2'-11 ⅝" x 5'-11 ½"
SASH SIZE:	2'-9 ¼" x 2'-5 $^{3}/_{16}$"
FRAME DIMENSION:	2.795"
CONFIGURATION:	

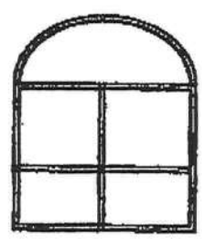

Refer to Mock-Up drawing in **Appendix A.** This report is not complete unless this drawing is stamped and initialed by **CCLI** as illustrated below.

CONSTRUCTION CONSULTING
LABORATORY, INTERNATIONAL
1601 Luna Road
Carrollton Texas 75006
Phone (972) 242-0556
03-201 GW 11-21-03

Weather-strip: One row pile weather-strip with integral plastic fin (0.300" thickness) at the exterior face sash top rail. One row pile weather-strip with integral plastic fin (0.250" thickness) at the exterior and lateral face sash stiles. One row bulb vinyl with foam walls (0.500") diameter at the exterior leg beneath sash bottom rail.

Hardware: Cam action locks, one (1), 7" on center from each end of sash top rail, attached with two (2), #8 x 1" self tapping screws with keeper grove at fixed interlock rail. One tilt latch and one steel pivot bar at top and bottom of sash stiles. One spiral type balance per jamb for sash operation.

Glass Fixed Lites: 5/8" overall thickness sealed insulating glass, two pieces DSB with 3/8" swiggle strip air spacer.

Sash Glass: 5/8" overall thickness sealed insulating glass, two pieces SSB with 7/16" swiggle strip metal air spacer.

Glazing: Exterior glazed with silicone sealant at interior of glass and rigid vinyl snap-in glazing bead at exterior of glass.

Fixed Window Weep Arrangement: ½" x ¼" weep slot spaced 5 ¾" from each end in the glazing pocket at frame sill with a 1" x 1/8" weep slot at the exterior of frame sill spaced 3 ¼" from each end.

Hung Weep Arrangement: 3/16" x 1/8" weep slot spaced 2 ¼" from each end in the glazing pocket punched through fixed interlock. 3/16" x 1/8" weep slot punched through sash bottom rail spaced 2 ½" from each end. Screen retaining legs and frame sill center leg notched ½" at each end

Reinforcement: T-shaped extruded aluminum reinforcement at sash members and L-shaped at fixed interlock. T-shaped extruded aluminum at vertical and horizontal mullion.

Installation: Test buck was constructed from nominal 2" x 6" and 2" x 4" at the perimeter with ½" OSB or strand board at the infil. Window opening is cut into the OSB and then framed with nominal 2" x 4" SPF. Window nail fin is attached through OSB into 2" x 4" with # 8 x 1 ½" wood screws spaced 2-3" from each end and on approximately 12" centers.

Other Features: Frame and sash corners are mitered and welded. Fixed interlock reinforcement attached to frame jambs with one (1) #8 x 2" wafer head screw and one (1) 7/8" dia flat washer per end.

Mullion Features: Mullion brackets (steel plate 2 ¼" x 3 ¼" x 0.050"t) are attached to each end of horizontal mullion and bottom of vertical mullion with two (2) # 8 x 1" wafer or pan head screws into mullion screw spline, **Photograph 2, Appendix B.** Mullion brackets are then attached into test buck with two (2) #8 x 1 ½" wood screws. Frame members are attached to extruded aluminum mullion with #8 x 1" screws spaced approximately 2-3" from each end and on 12" centers. Rigid vinyl mull cover is applied to the extruded aluminum mulls at interior and exterior face of mullion.

Date Tests Started:	October 23, 2003
Date Tests Completed:	October 23, 2003
Testing Performed at:	Construction Consulting Laboratory, *International* in Carrollton, Texas

6. PERFORMANCE RESULTS

Title Of Test	Test Method	Measured	Allowed
Uniform Deflection @ Horizontal Mullion	ASTM E 330-02 (10 Second Duration)		
-Positive @ 50 PSF		.550"	.408"
-Permanent Set		.040"	.286"
-Negative @ 50 PSF		.595"	.408"
-Permanent Set		.080"	.286"
Uniform Deflection @ Vertical Mullion	ASTM E 330-02 (10 Second Duration)		
-Positive @ 50 PSF		.830"	.408"
-Permanent Set		.000"	.286"
-Negative @ 50 PSF		.890"	.408"
-Permanent Set		.050"	.286"

Uniform Structural	ASTM E 330-02 (10 Second Duration)	
-Positive	75.00 PSF	75.00 PSF
-Negative	75.00 PSF	75.00 PSF
-Permanent Set (Horizontal)	.110	0.286"
-Permanent Set (Vertical)	.065	0.336"

Detailed extrusion and assembly drawings indicating measured wall thickness and corner construction are on file and were compared to the test sample submitted. These records will be retained at **CCLI** for a period of four years.

7. CONCLUSION

The tests noted in Section 6 of this report were conducted in accordance with the structural requirements of AAMA 450-00 using ASTM E 330-02.

Respectfully submitted,
CONSTRUCTION CONSULTING LABORATORY, *INTERNATIONAL*

JUVENAL AZUA
TECHNICIAN

WESLEY A. WILSON
LABORATORY MANAGER

OXO
Glazed Inswing Unit

COP-WL-JH4144-02

WOOD-EDGE STEEL DOORS

APPROVED ARRANGEMENT:

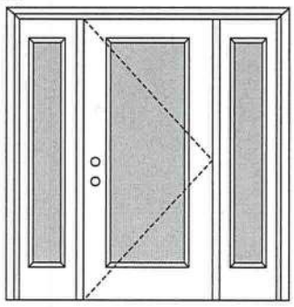

Warnock Hersey

Test Data Review Certificate #3026447A and COP/Test Report Validation Matrix #3026447A-001 provides additional information - available from the ITS/WH website (www.etlsemko.com), the Masonite website (www.masonite.com) or the Masonite technical center.

Note:
Units of other sizes are covered by this report as long as the panels used do not exceed 3'0" x 6'8".

Single Door with 2 Sidelites
Maximum unit size = 9'0" x 6'8"

Design Pressure

+40.5/-40.5
Limited water unless special threshold design is used.

Large Missile Impact Resistance

Hurricane protective system (shutters) is REQUIRED.

Actual design pressure and impact resistant requirements for a specific building design and geographic location is determined by ASCE 7-national, state or local building codes specify the edition required.

MINIMUM ASSEMBLY DETAIL:

Compliance requires that minimum assembly details have been followed – see MAD-WL-MA0004-02 or MAD-WL-MA0007-02 and MAD-WL-MA0041-02.

MINIMUM INSTALLATION DETAIL:

Compliance requires that minimum installation details have been followed – see MID-WL-MA0004-02.

APPROVED DOOR STYLES:

1/4 GLASS:

100 Series

133, 135 Series

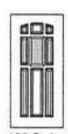
136 Series

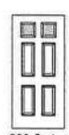
680 Series

822 Series

1/2 GLASS:

105 Series*

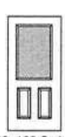
106, 160 Series*

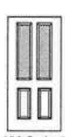
129 Series*

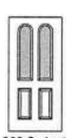
200 Series*

12 R/L, 23 R/L, 24 R/L Series*

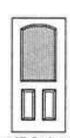
107 Series*

108 Series

304 Series

*This glass kit may also be used in the following door styles: 5-panel; 5-panel with scroll; Eyebrow 5-panel; Eyebrow 5-panel with scroll.

Johnson™ EntrySystems

June 17, 2002
Our continuing program of product improvement makes specifications, design and product detail subject to change without notice.

PREMDOR Collection Premium Quality Doors

Exclusively from Masonite®
Masonite International Corporation

OXO
Glazed Inswing Unit

COP-WL-JH4144-02

WOOD-EDGE STEEL DOORS

APPROVED DOOR STYLES:

3/4 GLASS:

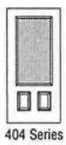
404 Series

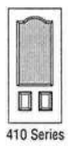
410 Series

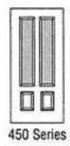
450 Series

FULL GLASS:

109 Series

114, 120, 122 Series

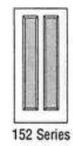
152 Series

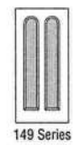
149 Series

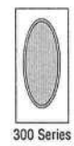
300 Series

APPROVED SIDELITE STYLES:

680 Series

129 Series

200 Series

12R, 12L, 23R, 23L, 24R, 24L Series

450 Series

152 Series

149 Series

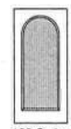
109 Series

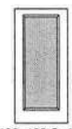
120, 122 Series

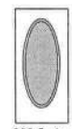
300 Series

CERTIFIED TEST REPORTS:

NCTL 210-1897-7, 8, 9, 10, 11, 12; NCTL 210-1861-4, 5, 6, 10, 11, 12; NCTL 210-2185-1, 2, 3

Certifying Engineer and License Number: Barry D. Portney, P.E. / 16258.

Unit Tested in Accordance with Miami-Dade BCCO PA202.

Evaluation report NCTL-210-2794-1

Door panels constructed from 26-gauge 0.017" thick steel skins. Both stiles constructed from wood. Top end rails constructed of 0.041" steel. Bottom end rails constructed of 0.021" steel. Interior cavity of slab filled with rigid polyurethane foam core. Slab and sidelite panels glazed with insulated glass mounted in a rigid plastic lip lite surround.

Frame constructed of wood with an extruded aluminum threshold.

PRODUCT COMPLIANCE LABELING:

TESTED IN
ACCORDANCE WITH
MIAMI-DADE BCCO PA202

COMPANY NAME
CITY, STATE

To the best of my knowledge and ability the above side-hinged exterior door unit conforms to the requirements of the 2001 Florida Building Code, Chapter 17 (Structural Tests and Inspections).

Kurt L Balthazor

State of Florida, Professional Engineer
Kurt Balthazor, P.E. – License Number 56533

Warnock Hersey

Test Data Review Certificate #3026447A and COP/Test Report Validation Matrix #3026447A-001 provides additional information - available from the ITS/WH website (www.etlsemko.com), the Masonite website (www.masonite.com) or the Masonite technical center.

Johnson™ EntrySystems

June 17, 2002
Our continuing program of product improvement makes specifications, design and product detail subject to change without notice.

PREMDOR Collection Premium Quality Doors

Exclusively from Masonite®
Masonite International Corporation

16X11

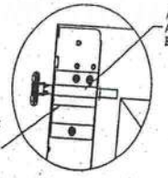

TYPICAL TOP FIXTURES (1)
N.T.S.

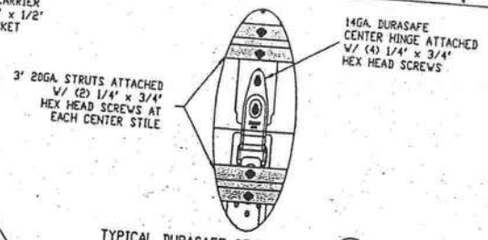

TYPICAL DURASAFE CENTER HINGE (2)
N.T.S.

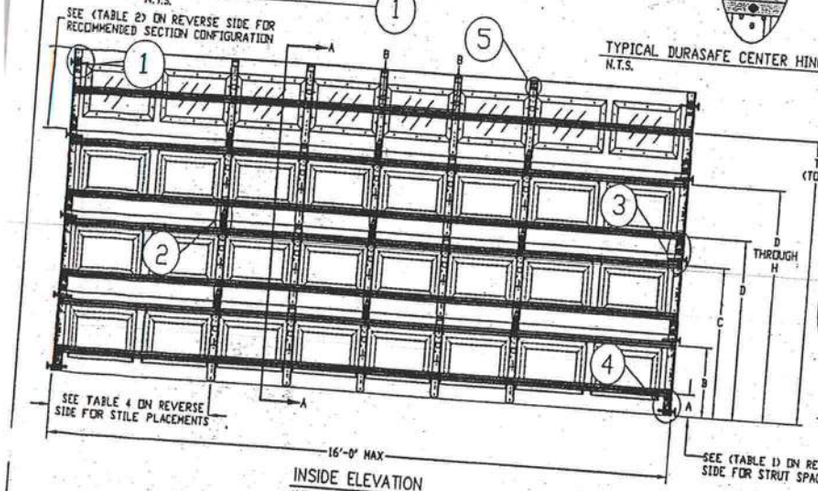

INSIDE ELEVATION
N.T.S.

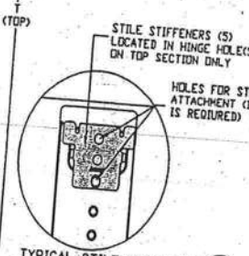

TYPICAL STILE STIFFENER (5)
N.T.S.

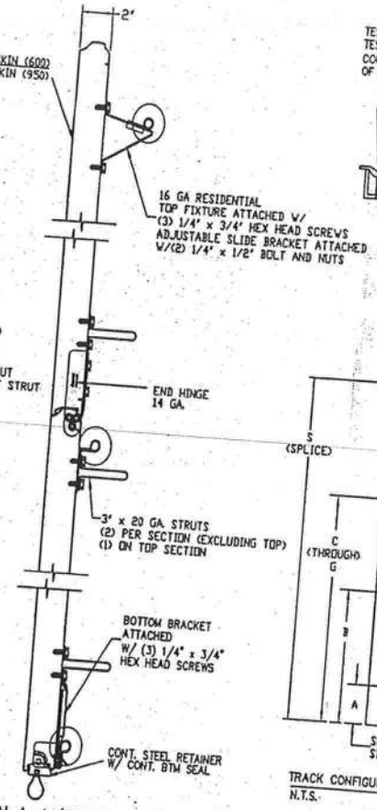

SECTION A-A (SIDE VIEW)
N.T.S.

GLAZING OPTION CROSS SECTION

GLAZING NOT AVAILABLE IN WIND-BORNE DEBRIS REGION

TEST No. IRC-6009-159-15 ON OCTOBER 10, 2002 INCLUDED GLAZING IN THE TESTED DOOR. THE TEST PRESSURES WERE +67.9 PSF AND -80.3 PSF. BY COMPARISION, UP TO EIGHT (8) WINDOWS MAY BE INSTALLED IN (1) ONE SECTION OF EITHER THE MODEL 600 OR 950 DOORS CONSTRUCTED PER THIS DRAWING.

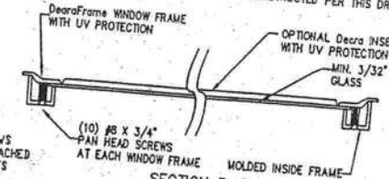

SECTION B-B

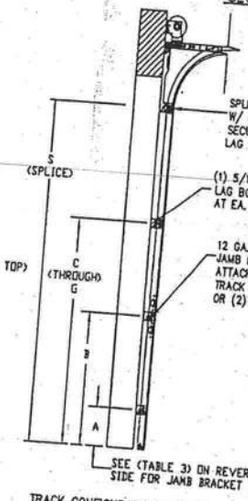

TRACK CONFIGURATION FOR 6'6" UP TO 14' TALL DOORS
N.T.S.

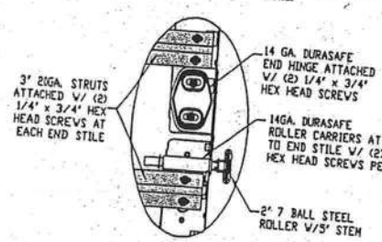

TYPICAL DURASAFE END HINGE (3)
N.T.S.

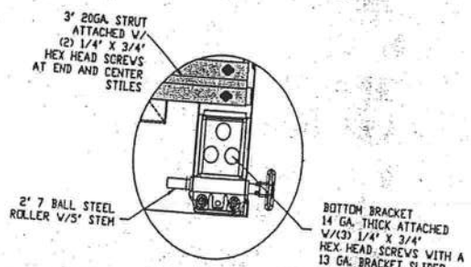

TYPICAL BOTTOM BRACKET (4)
N.T.S.

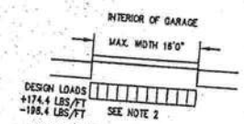

SPECIFICATIONS AND NOTES

1. ALL THE LOAD FROM THE DOOR IS TRANSFERRED TO THE VERTICAL TRACK. FROM THE TRACK THE LOAD IS TRANSFERRED TO THE VERTICAL JAMBS. THE HORIZONTAL JAMB OR HEADER RECEIVES NO PORTION OF THE LOAD TRANSFERRED FROM THE DOOR.
2. EACH VERTICAL JAMBS RECEIVES MAXIMUM DESIGN LOADS OF: +174.4 LBS/FT & -198.4 LBS/FT
3. DOORS AND HARDWARE WILL BE DESIGNED, MANUFACTURED AND INSTALLED WITH STANDARDS AS SET FORTH BY DASMA.
4. DOOR SECTIONS SHALL BE 25 GA. MIN. (.019") ROLLED FORMED LIGHT COMMERCIAL QUALITY, G-40 GALVANIZATION
5. SUPPORTING STRUCTURAL ELEMENTS SHALL BE DESIGNED BY A REGISTRED PROFESSIONAL ENGINEER FOR WIND LOADS INDICATED ON THIS DRAWING IN ADDITION TO OTHER LOADINGS.
6. THE METHOD OF TESTING WAS IN SUBSTANTIAL CONFORMANCE WITH THE PROCEDURE DESCRIBED IN DASMA 108, ASTM E330, AND THE SOUTHERN BUILDING CODE SECTION 1606 WIND LOAD DESIGN CRITERIA THE PRESSURES SHOWN ON THE DRAWINGS WERE CALCULATED USING ASCE 7-98 WITH THE FOLLOWING PARAMETERS:
   A. BASIC WIND SPEED OF 120 MPH (PEAK GUST)
   B. DOOR CAN BE INSTALLED WITH 5 FEET OF DOORS WIDTH INSIDE THE EDGE STRIP.
   C. 30' OR LESS MEAN ROOF HEIGHT AT ANY SLOPE
   D. USE FACTOR OF 1.0
   E. EXPOSURE RATING OF B
7. REFER TO TABLES ON THE REVERSE SIDE FOR ADDITIONAL DOOR WIDTHS AND THEIR DESIGN PRESSURES

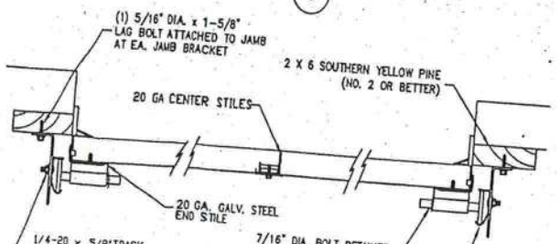

TRACK MOUNTING DETAIL
N.T.S.

WOOD JAMB ATTACHMENT TO STRUCTURE

RATED FOR 120 MPH PEAK GUST; EXPOSURE B; 30' OR LESS MEAN ROOF HEIGHT

2 X 6 VERTICAL JAMB ATTACHMENT TO WOOD FRAME STRUCTURE
5/16" X 3" LAG SCREWS STARTING 6" FROM ENDS THEN 24" O.C. (1 1/2" EMBEDMENT)

2 X 6 VERTICAL JAMB ATTACHMENT TO 2,000 PSI CONCRETE
HILTI KWK BOLT 3/8" X 4" STARTING 6" FROM ENDS THEN 24" O.C. (2 1/2" EMBEDMENT)
HILTI SLEEVE ANCHOR 3/8" X 2-3/4" STARTING 6" FROM ENDS THEN 24" O.C. (1 1/4" EMBEDMENT)
ITW/RAMSET REDHEAD (TRU-BOLT) 3/8" X 4" STARTING 6" FROM ENDS THEN 24" O.C. (2 1/2" EMBEDMENT)

2 X 6 VERTICAL JAMB ATTACHMENT TO C-90 BLOCK
HILTI SLEEVE ANCHOR 3/8" X 2-3/4" STARTING 6" FROM ENDS THEN 24" O.C. (1 1/4" EMBEDMENT)
ITW/RAMSET TAPCON 1/4" X 2-3/4" STARTING 6" FROM ENDS, USE PAIRS OF FASTENERS (3" APART) AT 16" O.C.(1 1/4" EMBEDMENT)

*LAGS AND BOLTS CAN BE COUNTERSUNK TO PROVIDE A FLUSH MOUNTING SURFACE.
*PREPARATION OF WOOD JAMBS BY OTHERS

REV	DESCRIPTION OF REVISIONS	DATE	BY

MAX SIZE
16' x 14'

DESIGN LOADS
+21.8 PSF
-24.8 PSF

TEST LOADS
+32.7 PSF
-37.2 PSF

JUN 03 2003

Amarr GARAGE DOORS
165 CARRIAGE COURT WINSTON-SALEM, N.C. 27105

MODEL #600 STRATFORD w/DuraSafe
MODEL 950 HERITAGE w/DuraSafe
Short Panel, Long Panel, and Flush Panel

SIZE	DRAWN BY DLJ	DATE 04/15/03	DRAWING NUMBER
B	CHECKED BY AAE	DATE 04/15/03	IRC-6016-120-15

** LAMAR BOOZER **
900 EAST PUTNAM STREET
LAKE CITY, FL 32055

PROJECT: CUSTOI
CLIENT: J PERR'
DATE: 9 19 0:

RESIDENTIAL/LIGHT COMMERCIAL HVAC LOADS

DESIGNER: LAMAR BOOZEI

CLIENT INFORMATION:

NAME: J PERRY
ADDRESS:
CITY, STATE: LAKE CITY, FLORIDA

TOTAL BUILDING LOADS:

BLDG. LOAD DESCRIPTIONS	AREA QUAN	SEN. LOSS	LAT. + GAIN	SEN. = GAIN	TOTAL GAIN
3-C WINDOW DBL PANE CLR GLS METL FR	140	4,568	0	7,721	7,721
9-I FRENCH DOOR DBL CLR GLS METL FR	40	1,357	0	1,536	1,536
12-D WALL R-11 +1/2"ASPHLT BRD(R-1.3)	1,252	4,507	0	2,462	2,462
11-C DOOR METAL POLYSTYRENE CORE	60	1,269	0	693	693
16-G CEILING R-30 INSULATION	1,934	2,466	0	2,466	2,466
22-A SLAB ON GRADE NO EDGE INSUL	44	1,604	0	0	0
22-B SLAB ON GRADE 1" EDGE INS(R-5)	142	2,620	0	0	0
SUBTOTALS FOR STRUCTURE:	3,612	18,391	0	14,878	14,878
PEOPLE	9	0	0	2,700	2,700
APPLIANCES	0	0	1,800	1,500	3,300
DUCTWORK	0	919	0	1,908	1,908
INFILTRATION W.CFM: 0.0 S.CFM: 0.0	0	0	0	0	0
VENTILATION W.CFM: 0.0 S.CFM: 0.0	0	0	0	0	0
SENSIBLE GAIN TOTAL				20,986	
TEMP. SWING MULTIPLIER				X 1.00	
BUILDING LOAD TOTALS		19,310	1,800	20,986	22,786

SUPPLY CFM AT 20 DEG DT: 954
SQUARE FT. OF ROOM AREA: 1,934

CFM PER SQUARE FOOT: 0.574
SQUARE FOOT PER TON: 874.748

TOTAL HEATING REQUIRED WITH OUTSIDE AIR: 19.310 MBH
TOTAL COOLING REQUIRED WITH OUTSIDE AIR: 2.899 TONS

CALCULATIONS ARE BASED ON 7TH EDITION OF ACCA MANUAL J.
ALL COMPUTED RESULTS ARE ESTIMATES AS BUILDING USE AND WEATHER MAY VARY.
BE SURE TO SELECT A UNIT THAT MEETS BOTH SENSIBLE AND LATENT LOADS.

Alpine Engineered Products, Inc.

1950 Marley Drive Haines City, FL 33844
Florida Engineering Certificate of Authorization Number: 567
Florida Certificate of Product Approval # FL1999
 Document ID:1SQ5487-Z0402144630

Truss Fabricator: Anderson Truss Company
Job Identification: 5-392-JONATHON PERRY / LOT 18 PHASE II STONEHANGE
Truss Count: 48
Model Code: Florida Building Code 2001
Truss Criteria: ANSI/TPI-1995(STD)/FBC
Engineering Software: Alpine Software,Version 7.04.
Structural Engineer of Record:
Address:
Minimum Design Loads: Roof - 40.0 PSF @ 1.25 Duration
Floor - N/A
Wind - 110 MPH ASCE 7-98 -Closed

Seal Date: 09/02/2005

-Truss Design Engineer-
Arthur R. Fisher
Florida License Number: 59687
1950 Marley Drive
Haines City, FL 33844

Notes:

1. Determination as to the suitability of these truss components for the structure is the responsibility of the building designer/engineer of record, as defined in ANSI/TPI 1-1995 Section 2.2
2. The drawing date shown on this index sheet must match the date shown on the individual truss component drawing.
3. As shown on attached drawings; the drawing number is preceded by: HCUSR487

Details: A11015EC-GBLLETIN

#	Ref Description	Drawing#	Date
1	33375--A4	05245127	09/02/05
2	33376--A1	05245148	09/02/05
3	33377--A	05245147	09/02/05
4	33378--H17AM	05245137	09/02/05
5	33379--A3	05245146	09/02/05
6	33380--A2	05245149	09/02/05
7	33381--H15AM	05245141	09/02/05
8	33382--H7AM	05245150	09/02/05
9	33383--H11A	05245163	09/02/05
10	33384--H9A	05245164	09/02/05
11	33385--H9AM	05245154	09/02/05
12	33386--H11AM	05245155	09/02/05
13	33387--H13AM	05245156	09/02/05
14	33388--H7A	05245165	09/02/05
15	33389--H17AT	05245145	09/02/05
16	33390--H15AT	05245166	09/02/05
17	33391--H13A	05245167	09/02/05
18	33392--AT1	05245143	09/02/05
19	33393--AT	05245142	09/02/05
20	33394--BGE	05245126	09/02/05
21	33395--B1	05245158	09/02/05
22	33396--B3	05245157	09/02/05
23	33397--B4	05245162	09/02/05
24	33398--B	05245144	09/02/05
25	33399--BS	05245160	09/02/05
26	33400--B2	05245159	09/02/05
27	33401--C	05245168	09/02/05
28	33402--C1	05245169	09/02/05
29	33403--C2	05245170	09/02/05
30	33404--C3	05245171	09/02/05
31	33405--CGE	05245172	09/02/05
32	33406--D	05245130	09/02/05
33	33407--D-1	05245136	09/02/05
34	33408--H7DT	05245133	09/02/05
35	33409--DT	05245161	09/02/05
36	33410--EJ7	05245173	09/02/05
37	33411--CJ5	05245152	09/02/05
38	33412--HJ7	05245151	09/02/05
39	33413--CJ3	05245153	09/02/05
40	33414--CJ1	05245132	09/02/05
41	33415--HJ7T	05245129	09/02/05
42	33416--CJ5T	05245138	09/02/05
43	33417--EJ7T	05245140	09/02/05
44	33418--CJ3T	05245131	09/02/05
45	33419--M2	05245139	09/02/05
46	33420--M	05245134	09/02/05
47	33421--M1	05245135	09/02/05
48	33422--MGE	05245128	09/02/05

Reversed

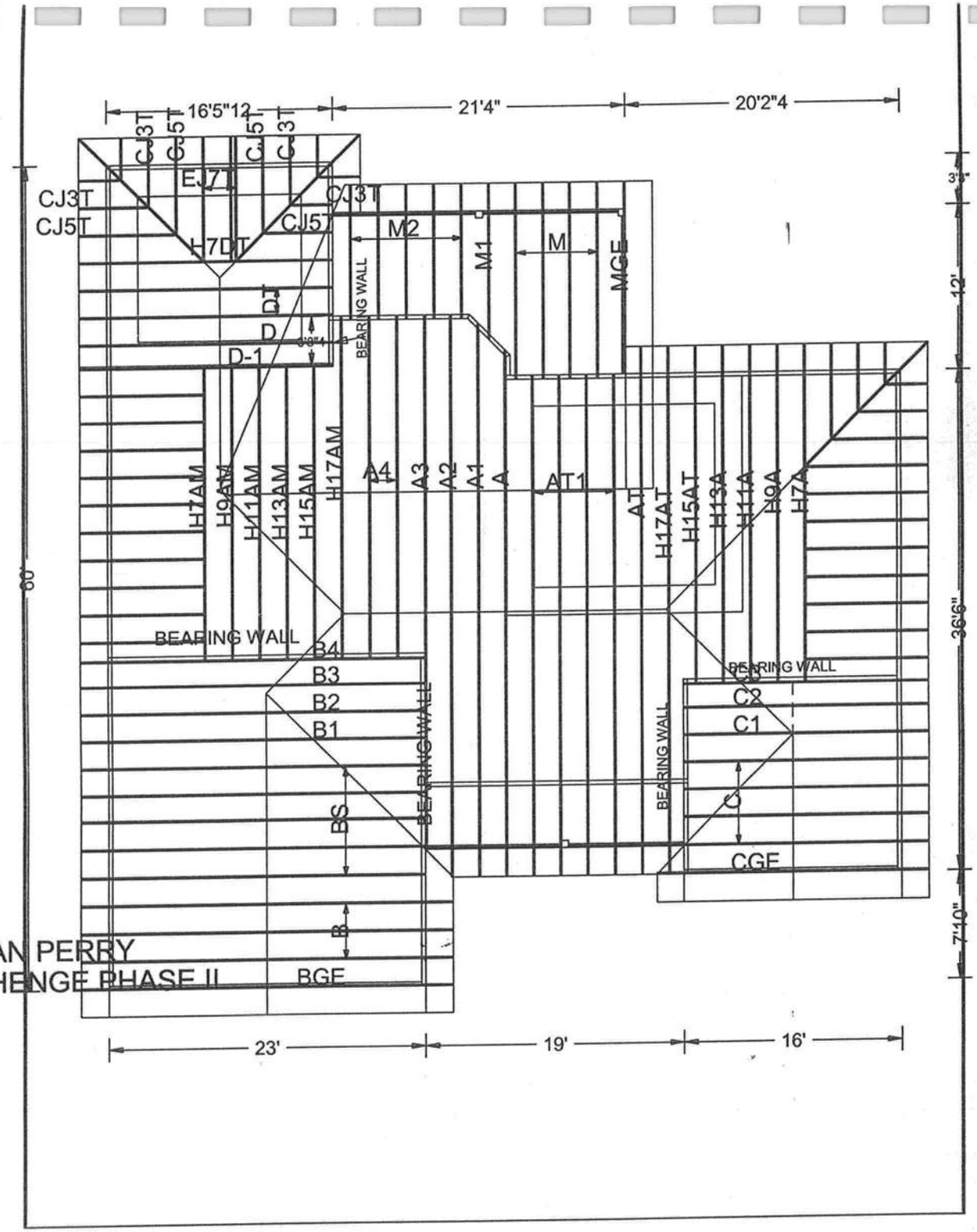

JONATHAN PERRY
LOT 18 STONEHENGE PHASE II

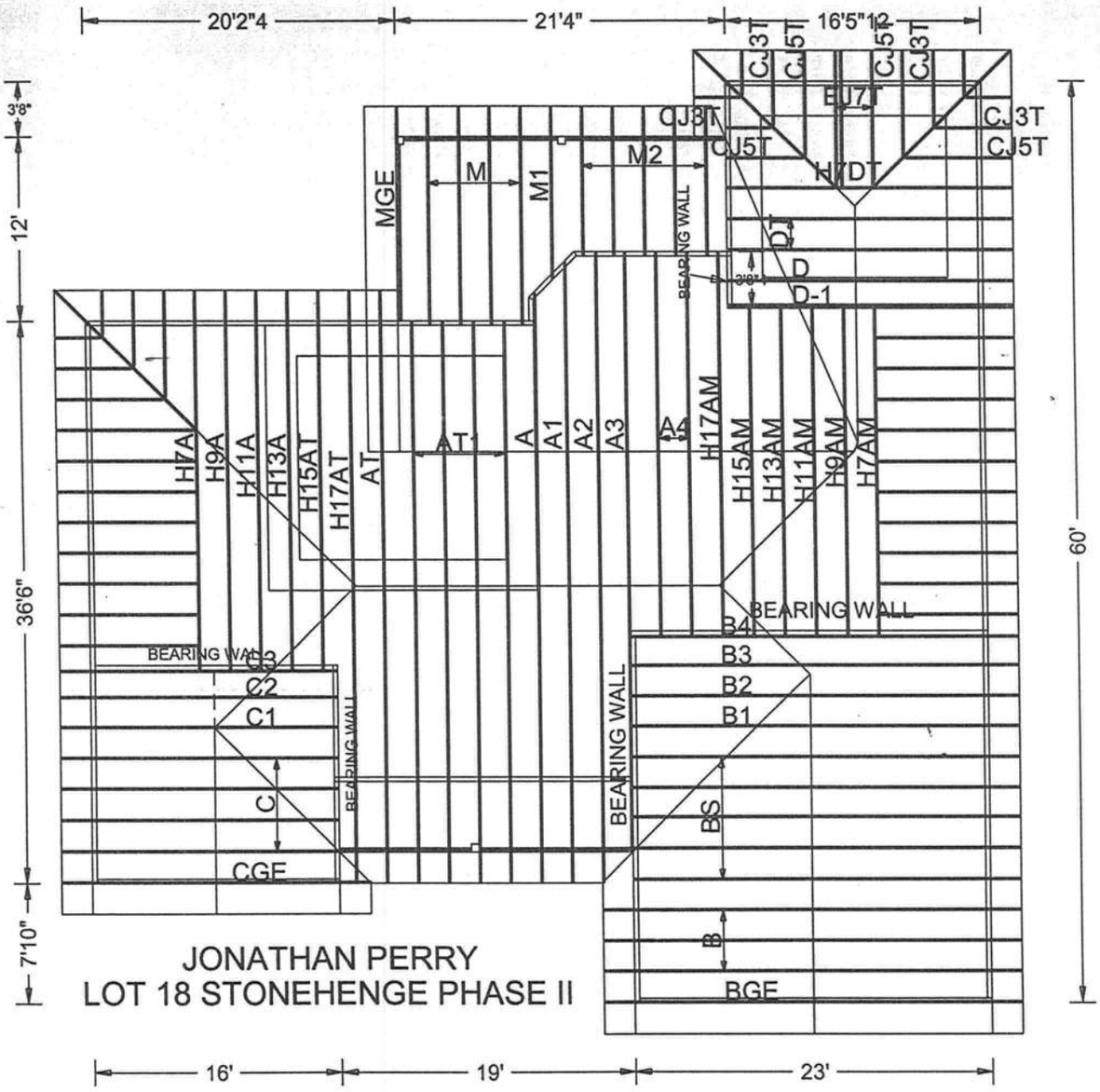

Roof Plane Sheathing Area = 3623 sq. ft
Gable Sheathing Area = 130 sq. ft
Total Sheathing Area = 3754 sq. ft
Fascia Material = 272 linear ft
Valley Flashing Material = 81 linear ft
Ridge Cap Material = 135 linear ft
Hip Ridge Material = 96 linear ft

Scale: 3/32" = 1'

(5-392-JONATHON PERRY / LOT 18 PHASE II STONEHANGE - A4)

Top chord 2x4 SP #2 Dense
Bot chord 2x4 SP #2 Dense
Webs 2x4 SP #3

Deflection meets L/360 live and L/240 total load.

110 mph wind, 13.43 ft mean hgt, ASCE 7-98, CLOSED bldg, not located within 4.50 ft from roof edge, CAT II, EXP B, wind TC DL=5.0 psf, wind BC DL=5.0 psf.

Right end vertical not exposed to wind pressure.

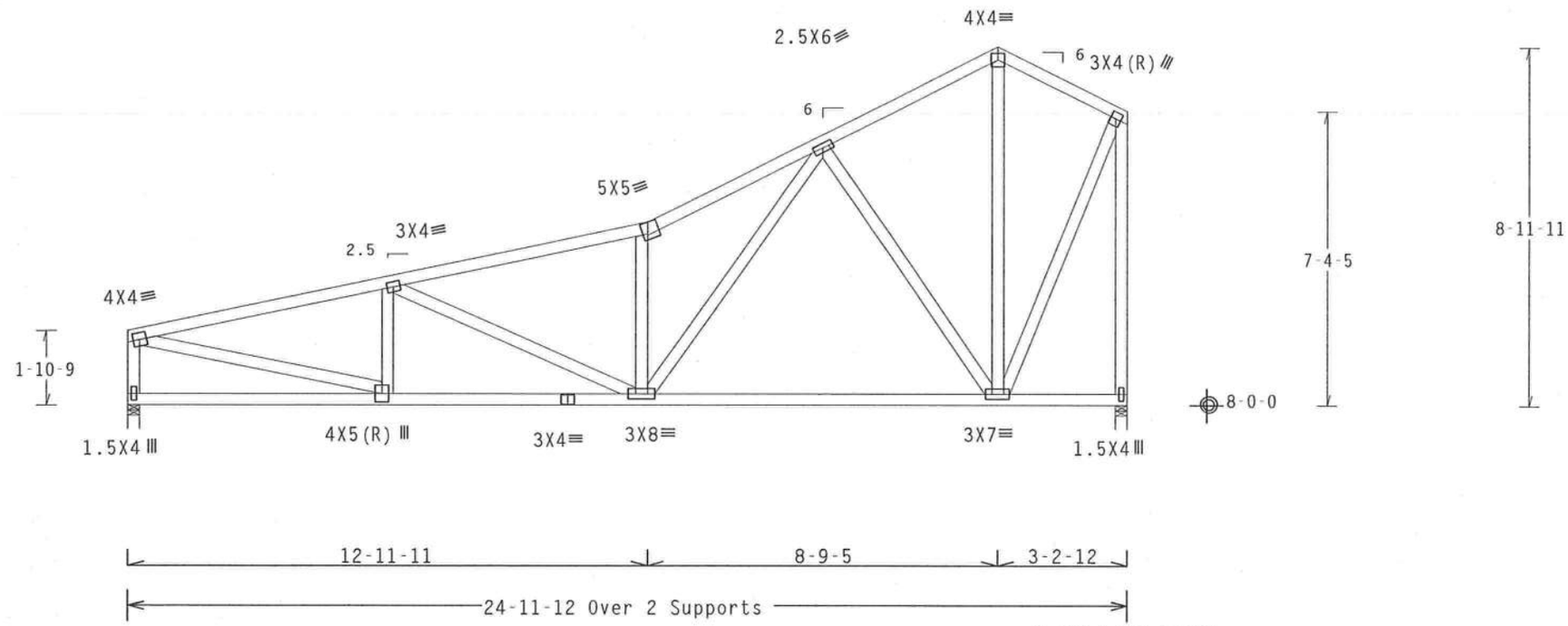

PLT TYP. Wave TPI Design Crit: TPI-1995(STD)/FBC 7.04 08/5/16 01.2

FL/-/3/-/-/R/- Scale =.25"/Ft.

WARNING TRUSSES REQUIRE EXTREME CARE IN FABRICATION, HANDLING, SHIPPING, INSTALLING AND BRACING. REFER TO BCSI 1-03 (BUILDING COMPONENT SAFETY INFORMATION), PUBLISHED BY TPI (TRUSS PLATE INSTITUTE, 583 D'ONOFRIO DR., SUITE 200, MADISON, WI 53719) AND WTCA (WOOD TRUSS COUNCIL OF AMERICA, 6300 ENTERPRISE LN, MADISON, WI 53719) FOR SAFETY PRACTICES PRIOR TO PERFORMING THESE FUNCTIONS. UNLESS OTHERWISE INDICATED, TOP CHORD SHALL HAVE PROPERLY ATTACHED STRUCTURAL PANELS AND BOTTOM CHORD SHALL HAVE A PROPERLY ATTACHED RIGID CEILING.

IMPORTANTFURNISH A COPY OF THIS DESIGN TO THE INSTALLATION CONTRACTOR. ALPINE ENGINEERED PRODUCTS, INC. SHALL NOT BE RESPONSIBLE FOR ANY DEVIATION FROM THIS DESIGN; ANY FAILURE TO BUILD THE TRUSS IN CONFORMANCE WITH TPI; OR FABRICATING, HANDLING, SHIPPING, INSTALLING & BRACING OF TRUSSES. DESIGN CONFORMS WITH APPLICABLE PROVISIONS OF NDS (NATIONAL DESIGN SPEC. BY AF&PA) AND TPI. ALPINE CONNECTOR PLATES ARE MADE OF 20/18/16GA (W,H/S/K) ASTM A653 GRADE 40/60 (W, K/H,S) GALV. STEEL. APPLY PLATES TO EACH FACE OF TRUSS AND, UNLESS OTHERWISE LOCATED ON THIS DESIGN, POSITION PER DRAWINGS 160A-Z. ANY INSPECTION OF PLATES FOLLOWED BY (1) SHALL BE PER ANNEX A3 OF TPI1-2002 SEC.3. A SEAL ON THIS DRAWING INDICATES ACCEPTANCE OF PROFESSIONAL ENGINEERING RESPONSIBILITY SOLELY FOR THE TRUSS COMPONENT DESIGN SHOWN. THE SUITABILITY AND USE OF THIS COMPONENT FOR ANY BUILDING IS THE RESPONSIBILITY OF THE BUILDING DESIGNER PER ANSI/TPI 1 SEC. 2.

ALPINE
Alpine Engineered Products, Inc.
1950 Marley Drive
Haines City, FL 33844

ARTHUR R. FISHER
LICENSE
No. 59687
STATE OF FLORIDA
PROFESSIONAL ENGINEER
Sep 02 '05

TC LL	20.0 PSF	REF R487-- 33375
TC DL	10.0 PSF	DATE 09/02/05
BC DL	10.0 PSF	DRW HCUSR487 05245127
BC LL	0.0 PSF	HC-ENG JB/AF *
TOT.LD.	40.0 PSF	SEQN- 27267
DUR.FAC.	1.25	

(5-392-JONATHON PERRY / LOT 18 PHASE II STONEHANGE - A1)

Top chord 2x4 SP #2 Dense
Bot chord 2x4 SP #2 Dense
Webs 2x4 SP #3

Left end vertical not exposed to wind pressure.

110 mph wind, 12.16 ft mean hgt, ASCE 7-98, CLOSED bldg, not located within 4.50 ft from roof edge, CAT II, EXP B, wind TC DL=5.0 psf, wind BC DL=5.0 psf.

Deflection meets L/360 live and L/240 total load.

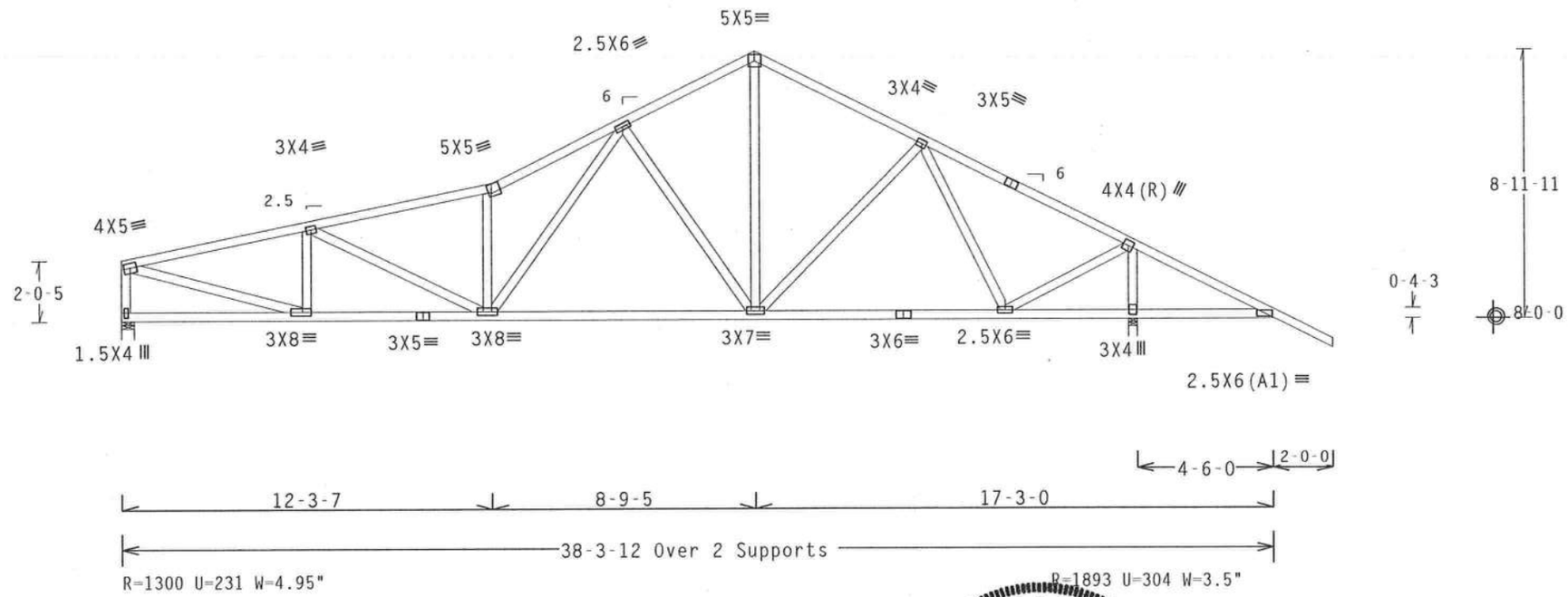

PLT TYP. Wave TPI | Design Crit: TPI-1995(STD)/FBC | 7.04.6303.16 | QTY 1 | FL/-/3/-/-/R/- | Scale =.1875"/Ft.

ALPINE
Alpine Engineered Products, Inc.
1950 Marley Drive
Haines City, FL 33844

WARNING TRUSSES REQUIRE EXTREME CARE IN FABRICATION, HANDLING, SHIPPING, INSTALLING AND BRACING. REFER TO BCSI 1-03 (BUILDING COMPONENT SAFETY INFORMATION), PUBLISHED BY TPI (TRUSS PLATE INSTITUTE, 583 D'ONOFRIO DR., SUITE 200, MADISON, WI 53719) AND WTCA (WOOD TRUSS COUNCIL OF AMERICA, 6300 ENTERPRISE LN, MADISON, WI 53719) FOR SAFETY PRACTICES PRIOR TO PERFORMING THESE FUNCTIONS. UNLESS OTHERWISE INDICATED, TOP CHORD SHALL HAVE PROPERLY ATTACHED STRUCTURAL PANELS AND BOTTOM CHORD SHALL HAVE A PROPERLY ATTACHED RIGID CEILING.

IMPORTANT FURNISH A COPY OF THIS DESIGN TO THE INSTALLATION CONTRACTOR. ALPINE ENGINEERED PRODUCTS, INC. SHALL NOT BE RESPONSIBLE FOR ANY DEVIATION FROM THIS DESIGN; ANY FAILURE TO BUILD THE TRUSS IN CONFORMANCE WITH TPI; OR FABRICATING, HANDLING, SHIPPING, INSTALLING & BRACING OF TRUSSES. DESIGN CONFORMS WITH APPLICABLE PROVISIONS OF NDS (NATIONAL DESIGN SPEC. BY AF&PA) AND TPI. ALPINE CONNECTOR PLATES ARE MADE OF 20/18/16GA (W,H/S/K) ASTM A653 GRADE 40/60 (W, K/H,S) GALV. STEEL. APPLY PLATES TO EACH FACE OF TRUSS AND, UNLESS OTHERWISE LOCATED ON THIS DESIGN, POSITION PER DRAWINGS 160A-Z. ANY INSPECTION OF PLATES FOLLOWED BY (1) SHALL BE PER ANNEX A3 OF TPI1-2002 SEC.3. A SEAL ON THIS DRAWING INDICATES ACCEPTANCE OF PROFESSIONAL ENGINEERING RESPONSIBILITY SOLELY FOR THE TRUSS COMPONENT DESIGN SHOWN. THE SUITABILITY AND USE OF THIS COMPONENT FOR ANY BUILDING IS THE RESPONSIBILITY OF THE BUILDING DESIGNER PER ANSI/TPI 1 SEC. 2.

ARTHUR R. FISHER
LICENSE
No. 59687
Sep 02, 2005
STATE OF FLORIDA
PROFESSIONAL ENGINEER

TC LL	20.0 PSF	REF R487-- 33376
TC DL	10.0 PSF	DATE 09/02/05
BC DL	10.0 PSF	DRW HCUSR487 05245148
BC LL	0.0 PSF	HC-ENG JB/AF
TOT.LD.	40.0 PSF	SEQN- 27291
DUR.FAC.	1.25	
SPACING	24.0"	JREF- 1S05487.704

(5-392-JONATHON PERRY / LOT 18 PHASE II STONEHANGE - A)

Top chord 2x4 SP #2 Dense
Bot chord 2x4 SP #2 Dense
Webs 2x4 SP #3

Left end vertical not exposed to wind pressure.

Deflection meets L/360 live and L/240 total load.

110 mph wind, 12.16 ft mean hgt, ASCE 7-98, CLOSED bldg, not located within 4.50 ft from roof edge, CAT II, EXP B, wind TC DL=5.0 psf, wind BC DL=5.0 psf.

(A) Continuous lateral bracing equally spaced on member.

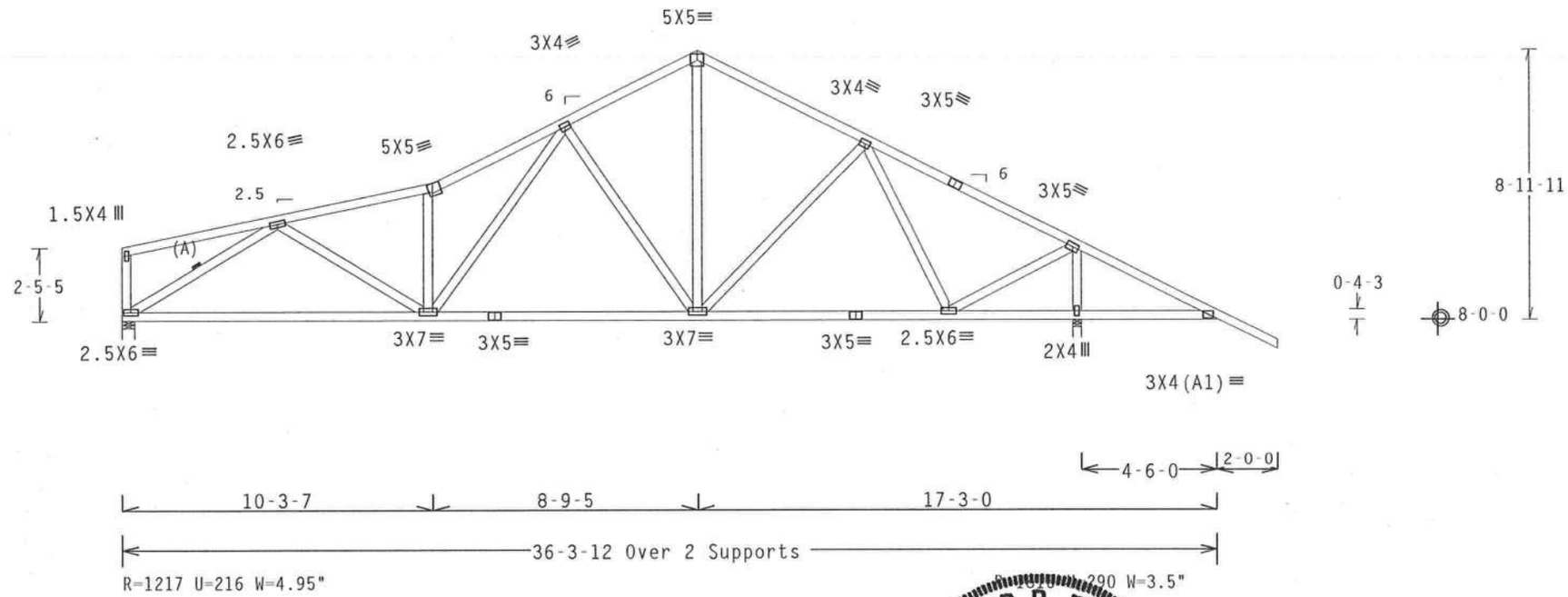

PLT TYP. Wave TPI | Design Crit: TPI-1995(STD)/FBC | 7.04 080[illegible].16 | QTY:1 | FL/-/3/-/-/R/- | Scale =.1875"/Ft.

ALPINE
Alpine Engineered Products, Inc
1950 Marley Drive
Haines City, FL 33844

WARNING TRUSSES REQUIRE EXTREME CARE IN FABRICATION, HANDLING, SHIPPING, INSTALLING AND BRACING. REFER TO BCSI 1-03 (BUILDING COMPONENT SAFETY INFORMATION), PUBLISHED BY TPI (TRUSS PLATE INSTITUTE, 583 D'ONOFRIO DR., SUITE 200, MADISON, WI 53719) AND WTCA (WOOD TRUSS COUNCIL OF AMERICA, 6300 ENTERPRISE LN, MADISON, WI 53719) FOR SAFETY PRACTICES PRIOR TO PERFORMING THESE FUNCTIONS. UNLESS OTHERWISE INDICATED, TOP CHORD SHALL HAVE PROPERLY ATTACHED STRUCTURAL PANELS AND BOTTOM CHORD SHALL HAVE A PROPERLY ATTACHED RIGID CEILING.

IMPORTANTFURNISH A COPY OF THIS DESIGN TO THE INSTALLATION CONTRACTOR. ALPINE ENGINEERED PRODUCTS, INC. SHALL NOT BE RESPONSIBLE FOR ANY DEVIATION FROM THIS DESIGN; ANY FAILURE TO BUILD THE TRUSS IN CONFORMANCE WITH TPI; OR FABRICATING, HANDLING, SHIPPING, INSTALLING & BRACING OF TRUSSES. DESIGN CONFORMS WITH APPLICABLE PROVISIONS OF NDS (NATIONAL DESIGN SPEC. BY AF&PA) AND TPI. ALPINE CONNECTOR PLATES ARE MADE OF 20/18/16GA (W,H/S/K) ASTM A653 GRADE 40/60 (W, K/H,S) GALV. STEEL. APPLY PLATES TO EACH FACE OF TRUSS AND, UNLESS OTHERWISE LOCATED ON THIS DESIGN, POSITION PER DRAWINGS 160A-Z. ANY INSPECTION OF PLATES FOLLOWED BY (1) SHALL BE PER ANNEX A3 OF TPI1-2002 SEC.3. A SEAL ON THIS DRAWING INDICATES ACCEPTANCE OF PROFESSIONAL ENGINEERING RESPONSIBILITY SOLELY FOR THE TRUSS COMPONENT DESIGN SHOWN. THE SUITABILITY AND USE OF THIS COMPONENT FOR ANY BUILDING IS THE RESPONSIBILITY OF THE BUILDING DESIGNER PER ANSI/TPI 1 SEC. 2.

ARTHUR R. FISHER
LICENSE
No. 59687
STATE OF FLORIDA
PROFESSIONAL ENGINEER

TC LL	20.0 PSF	REF R487-- 33377
TC DL	10.0 PSF	DATE 09/02/05
BC DL	10.0 PSF	DRW HCUSR487 05245147
BC LL	0.0 PSF	HC-ENG JB/AF *
TOT.LD.	40.0 PSF	SEQN- 27290
DUR.FAC.	1.25	
SPACING	24.0"	JREF 1S05487 704

(5-392-JONATHON PERRY / LOT 18 PHASE II STONEHANGE - HIPAR)

THIS DWG PREPARED FROM COMPUTER INPUT LOADS & DIMENSIONS SUBMITTED BY TRUSS MFR

Top chord 2x4 SP #2 Dense
Bot chord 2x4 SP #2 Dense
Webs 2x4 SP #3

Deflection meets L/360 live and L/240 total load.

110 mph wind, 13.36 ft mean hgt, ASCE 7-98, CLOSED bldg, not located within 4.50 ft from roof edge, CAT II, EXP B, wind TC DL=5.0 psf, wind BC DL=5.0 psf.

Right end vertical not exposed to wind pressure.

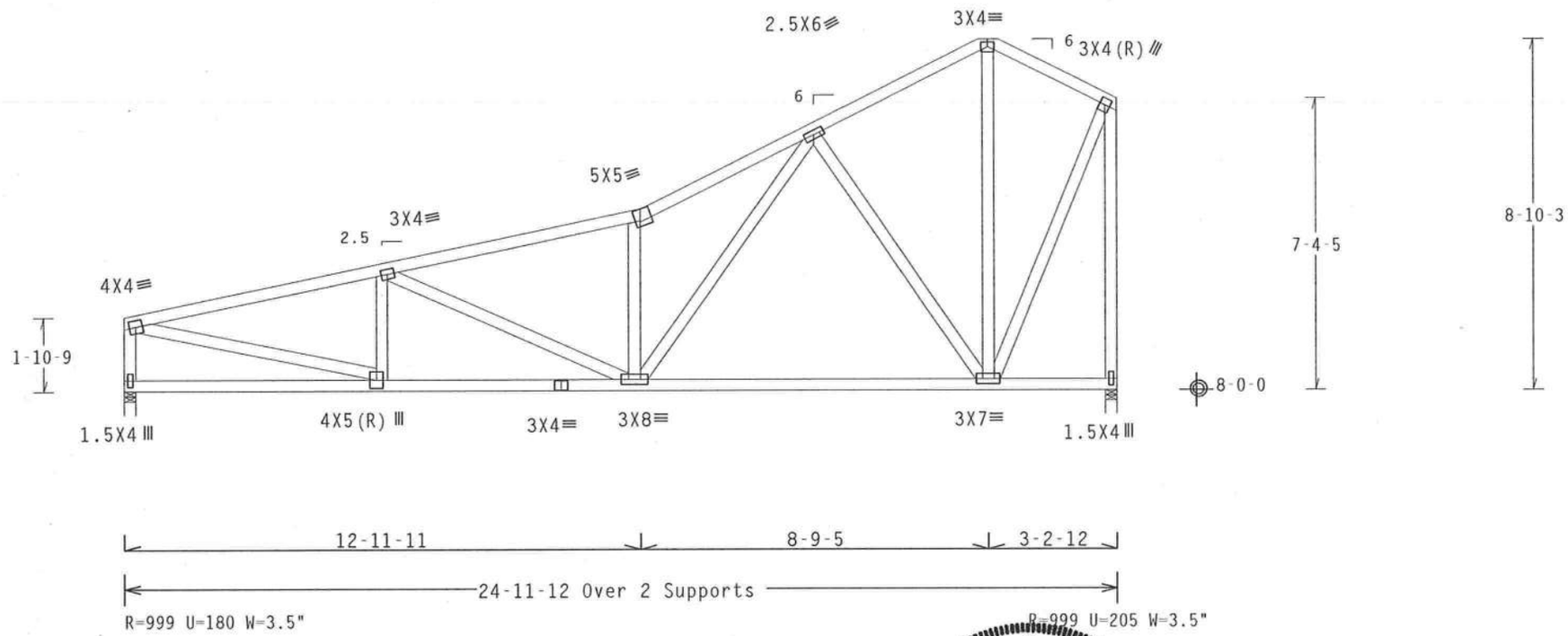

PLT TYP. Wave TPI | Design Crit: TPI-1995(STD)/FBC | 7.04 | 806.16 | QTY.1 | FL/-/3/-/-/R/- | Scale =.25"/Ft.

ALPINE
Alpine Engineered Products, Inc.
1950 Marley Drive
Haines City, FL 33844

WARNING TRUSSES REQUIRE EXTREME CARE IN FABRICATION, HANDLING, SHIPPING, INSTALLING AND BRACING. REFER TO BCSI 1-03 (BUILDING COMPONENT SAFETY INFORMATION), PUBLISHED BY TPI (TRUSS PLATE INSTITUTE, 583 D'ONOFRIO DR., SUITE 200, MADISON, WI 53719) AND WTCA (WOOD TRUSS COUNCIL OF AMERICA, 6300 ENTERPRISE LN, MADISON, WI 53719) FOR SAFETY PRACTICES PRIOR TO PERFORMING THESE FUNCTIONS. UNLESS OTHERWISE INDICATED, TOP CHORD SHALL HAVE PROPERLY ATTACHED STRUCTURAL PANELS AND BOTTOM CHORD SHALL HAVE A PROPERLY ATTACHED RIGID CEILING.

IMPORTANTFURNISH A COPY OF THIS DESIGN TO THE INSTALLATION CONTRACTOR. ALPINE ENGINEERED PRODUCTS, INC. SHALL NOT BE RESPONSIBLE FOR ANY DEVIATION FROM THIS DESIGN; ANY FAILURE TO BUILD THE TRUSS IN CONFORMANCE WITH TPI; OR FABRICATING, HANDLING, SHIPPING, INSTALLING & BRACING OF TRUSSES. DESIGN CONFORMS WITH APPLICABLE PROVISIONS OF NDS (NATIONAL DESIGN SPEC, BY AF&PA) AND TPI. ALPINE CONNECTOR PLATES ARE MADE OF 20/18/16GA (W,H/S/K) ASTM A653 GRADE 40/60 (W, K/H,S) GALV. STEEL. APPLY PLATES TO EACH FACE OF TRUSS AND, UNLESS OTHERWISE LOCATED ON THIS DESIGN, POSITION PER DRAWINGS 160A-Z. ANY INSPECTION OF PLATES FOLLOWED BY (1) SHALL BE PER ANNEX A3 OF TPI1-2002 SEC.3. A SEAL ON THIS DRAWING INDICATES ACCEPTANCE OF PROFESSIONAL ENGINEERING RESPONSIBILITY SOLELY FOR THE TRUSS COMPONENT DESIGN SHOWN. THE SUITABILITY AND USE OF THIS COMPONENT FOR ANY BUILDING IS THE RESPONSIBILITY OF THE BUILDING DESIGNER PER ANSI/TPI 1 SEC. 2.

ARTHUR R. FISHER
LICENSE
No. 59687
STATE OF FLORIDA
PROFESSIONAL ENGINEER

TC LL	20.0 PSF	REF R487-- 33378
TC DL	10.0 PSF	DATE 09/02/05
BC DL	10.0 PSF	DRW HCUSR487 05245137
BC LL	0.0 PSF	HC-ENG JB/AF *
TOT.LD.	40.0 PSF	SEQN- 27279
DUR.FAC.	1.25	
SPACING	24.0"	JREF- 1S05487 704

(5-392-JONATHON PERRY / LOT 18 PHASE II STONEHANGE - A3)

Top chord 2x4 SP #2 Dense
Bot chord 2x4 SP #2 Dense
Webs 2x4 SP #3

(A) Continuous lateral bracing equally spaced on member.

110 mph wind, 12.66 ft mean hgt, ASCE 7-98, CLOSED bldg, not located within 4.50 ft from roof edge, CAT II, EXP B, wind TC DL=5.0 psf, wind BC DL=5.0 psf.

Deflection meets L/360 live and L/240 total load.

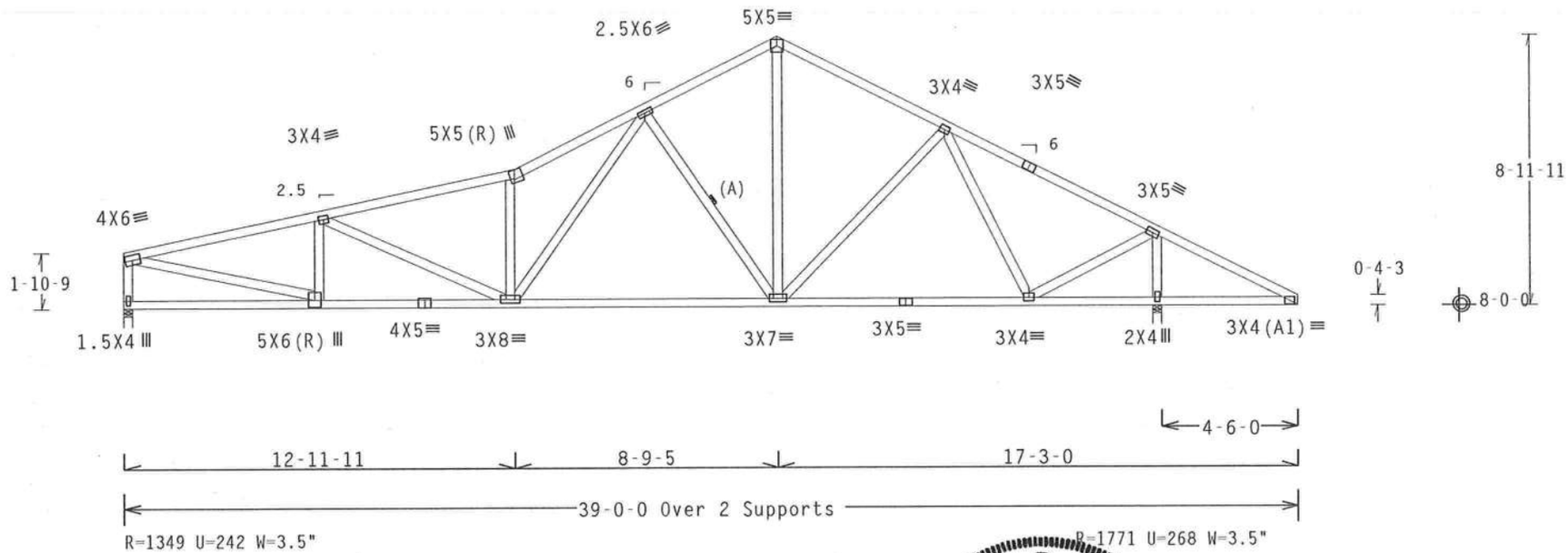

PLT TYP. Wave TPI | Design Crit: TPI-1995(STD)/FBC | 7.04.[illegible]805.16 | QTY: 1 | FL/-/3/-/-/R/- | Scale =.1875"/Ft.

ALPINE
Alpine Engineered Products, Inc.
1950 Marley Drive
Haines City, FL 33844

WARNING TRUSSES REQUIRE EXTREME CARE IN FABRICATION, HANDLING, SHIPPING, INSTALLING AND BRACING. REFER TO BCSI 1-03 (BUILDING COMPONENT SAFETY INFORMATION), PUBLISHED BY TPI (TRUSS PLATE INSTITUTE, 583 D'ONOFRIO DR., SUITE 200, MADISON, WI 53719) AND WTCA (WOOD TRUSS COUNCIL OF AMERICA, 6300 ENTERPRISE LN, MADISON, WI 53719) FOR SAFETY PRACTICES PRIOR TO PERFORMING THESE FUNCTIONS. UNLESS OTHERWISE INDICATED, TOP CHORD SHALL HAVE PROPERLY ATTACHED STRUCTURAL PANELS AND BOTTOM CHORD SHALL HAVE A PROPERLY ATTACHED RIGID CEILING.

IMPORTANTFURNISH A COPY OF THIS DESIGN TO THE INSTALLATION CONTRACTOR. ALPINE ENGINEERED PRODUCTS, INC. SHALL NOT BE RESPONSIBLE FOR ANY DEVIATION FROM THIS DESIGN; ANY FAILURE TO BUILD THE TRUSS IN CONFORMANCE WITH TPI: OR FABRICATING, HANDLING, SHIPPING, INSTALLING & BRACING OF TRUSSES. DESIGN CONFORMS WITH APPLICABLE PROVISIONS OF NDS (NATIONAL DESIGN SPEC. BY AF&PA) AND TPI. ALPINE CONNECTOR PLATES ARE MADE OF 20/18/16GA (W,H/S/K) ASTM A653 GRADE 40/60 (W, K/H,S) GALV. STEEL. APPLY PLATES TO EACH FACE OF TRUSS AND, UNLESS OTHERWISE LOCATED ON THIS DESIGN, POSITION PER DRAWINGS 160A-Z. ANY INSPECTION OF PLATES FOLLOWED BY (1) SHALL BE PER ANNEX A3 OF TPI1-2002 SEC.3. A SEAL ON THIS DRAWING INDICATES ACCEPTANCE OF PROFESSIONAL ENGINEERING RESPONSIBILITY SOLELY FOR THE TRUSS COMPONENT DESIGN SHOWN. THE SUITABILITY AND USE OF THIS COMPONENT FOR ANY BUILDING IS THE RESPONSIBILITY OF THE BUILDING DESIGNER PER ANSI/TPI 1 SEC. 2.

ARTHUR R. FISHER
LICENSE
No. 59687
STATE OF FLORIDA
PROFESSIONAL ENGINEER

TC LL	20.0 PSF	REF R487-- 33379
TC DL	10.0 PSF	DATE 09/02/05
BC DL	10.0 PSF	DRW HCUSR487 05245146
BC LL	0.0 PSF	HC-ENG JB/AF *
TOT.LD.	40.0 PSF	SEQN- 27289
DUR.FAC.	1.25	
SPACING	24.0"	JREF- 1S05487 704

(5-392-JONATHON PERRY / LOT 18 PHASE II STONEHANGE - A2)

Top chord 2x4 SP #2 Dense
Bot chord 2x4 SP #2 Dense
Webs 2x4 SP #3

(A) Continuous lateral bracing equally spaced on member.

110 mph wind, 12.16 ft mean hgt, ASCE 7-98, CLOSED bldg, not located within 4.50 ft from roof edge, CAT II, EXP B, wind TC DL=5.0 psf, wind BC DL=5.0 psf.

Deflection meets L/360 live and L/240 total load.

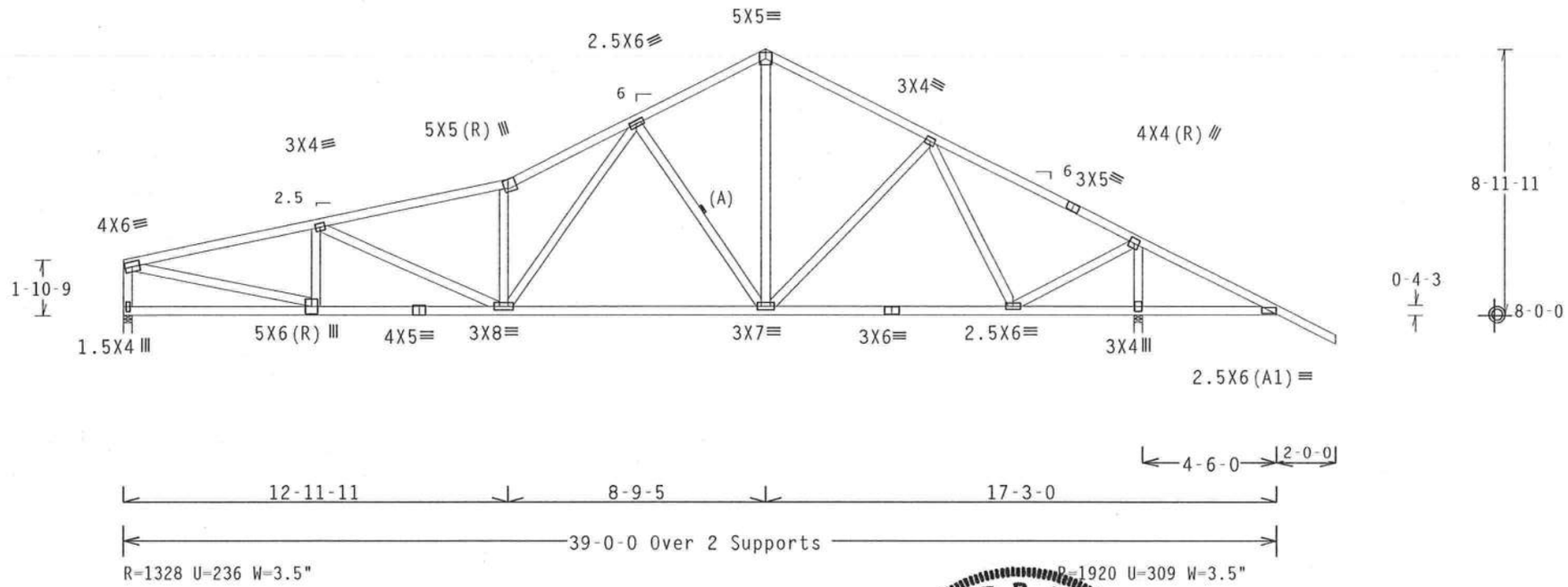

PLT TYP. Wave TPI | Design Crit: TPI-1995(STD)/FBC | 7.04 0805.16 | QTY:1 | FL/-/3/-/-/R/- | Scale =.1875"/Ft.

ALPINE

Alpine Engineered Products, Inc.
1950 Marley Drive
Haines City, FL 33844

WARNING TRUSSES REQUIRE EXTREME CARE IN FABRICATION, HANDLING, SHIPPING, INSTALLING AND BRACING. REFER TO BCSI 1-03 (BUILDING COMPONENT SAFETY INFORMATION), PUBLISHED BY TPI (TRUSS PLATE INSTITUTE, 583 D'ONOFRIO DR., SUITE 200, MADISON, WI 53719) AND WTCA (WOOD TRUSS COUNCIL OF AMERICA, 6300 ENTERPRISE LN, MADISON, WI 53719) FOR SAFETY PRACTICES PRIOR TO PERFORMING THESE FUNCTIONS. UNLESS OTHERWISE INDICATED, TOP CHORD SHALL HAVE PROPERLY ATTACHED STRUCTURAL PANELS AND BOTTOM CHORD SHALL HAVE A PROPERLY ATTACHED RIGID CEILING.

IMPORTANT FURNISH A COPY OF THIS DESIGN TO THE INSTALLATION CONTRACTOR. ALPINE ENGINEERED PRODUCTS, INC. SHALL NOT BE RESPONSIBLE FOR ANY DEVIATION FROM THIS DESIGN; ANY FAILURE TO BUILD THE TRUSS IN CONFORMANCE WITH TPI; OR FABRICATING, HANDLING, SHIPPING, INSTALLING & BRACING OF TRUSSES. DESIGN CONFORMS WITH APPLICABLE PROVISIONS OF NDS (NATIONAL DESIGN SPEC. BY AF&PA) AND TPI. ALPINE CONNECTOR PLATES ARE MADE OF 20/18/16GA (W,H/S/K) ASTM A653 GRADE 40/60 (W, K/H,S) GALV. STEEL. APPLY PLATES TO EACH FACE OF TRUSS AND, UNLESS OTHERWISE LOCATED ON THIS DESIGN, POSITION PER DRAWINGS 160A-Z. ANY INSPECTION OF PLATES FOLLOWED BY (1) SHALL BE PER ANNEX A3 OF TPI1-2002 SEC.3. A SEAL ON THIS DRAWING INDICATES ACCEPTANCE OF PROFESSIONAL ENGINEERING RESPONSIBILITY SOLELY FOR THE TRUSS COMPONENT DESIGN SHOWN. THE SUITABILITY AND USE OF THIS COMPONENT FOR ANY BUILDING IS THE RESPONSIBILITY OF THE BUILDING DESIGNER PER ANSI/TPI 1 SEC. 2.

ARTHUR R. FISHER
LICENSE
No. 59687
STATE OF FLORIDA
PROFESSIONAL ENGINEER

TC LL	20.0 PSF	REF R487-- 33380
TC DL	10.0 PSF	DATE 09/02/05
BC DL	10.0 PSF	DRW HCUSR487 05245149
BC LL	0.0 PSF	HC-ENG JB/AF *
TOT.LD.	40.0 PSF	SEQN- 27292
DUR.FAC.	1.25	
SPACING	24.0"	JREF 1S0F487 704

(5-392-JONATHON PERRY / LOT 18 PHASE II STONEHANGE - HISAN)

Top chord 2x4 SP #2 Dense
Bot chord 2x4 SP #2 Dense
Webs 2x4 SP #3

End verticals not exposed to wind pressure.

Deflection meets L/360 live and L/240 total load.

110 mph wind, 13.25 ft mean hgt, ASCE 7-98, CLOSED bldg, not located within 4.50 ft from roof edge, CAT II, EXP B, wind TC DL=5.0 psf, wind BC DL=5.0 psf.

H = recommended connection based on manufacturer tested capacities and calculations. Conditions may exist that require different connections than indicated. Refer to manufacturer publication for additional information.

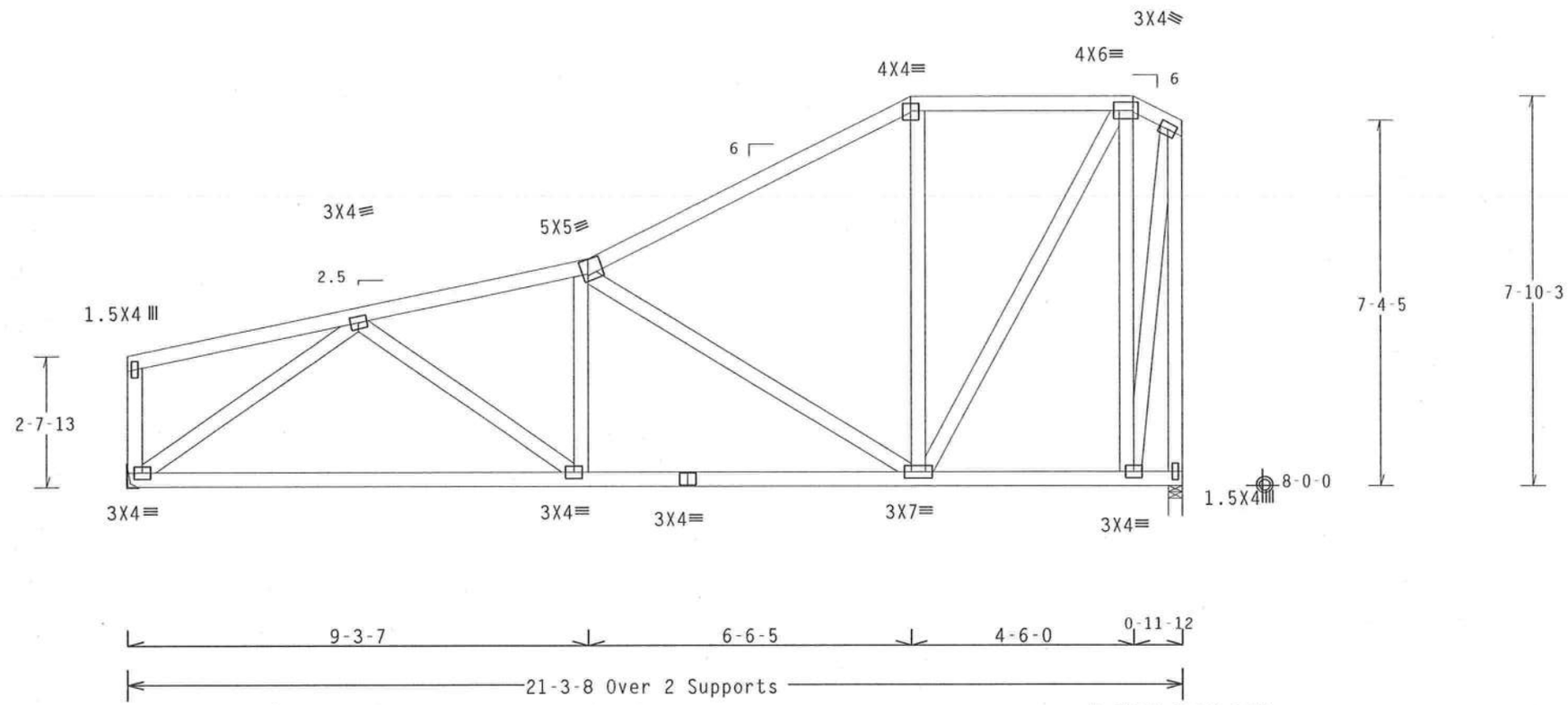

R=852 U=180 H=Simpson LUS26
w/ (4) 10d Common, 0.148"x3.0" nails in Truss
w/ (4) 10d Common, 0.148"x3.0" nails in Girder
Girder is (1)2X6 min. So.Pine

R=852 U=214 W=3.5"

PLT TYP. Wave TPI | Design Crit: TPI-1995(STD)/FBC | 7.04 | 980[illegible] | QTY:1 | FL/-/3/-/-/R/- | Scale =.3125"/Ft.

ALPINE
Alpine Engineered Products, Inc.
1950 Marley Drive
Haines City, FL 33844

WARNING TRUSSES REQUIRE EXTREME CARE IN FABRICATION, HANDLING, SHIPPING, INSTALLING AND BRACING. REFER TO BCSI 1-03 (BUILDING COMPONENT SAFETY INFORMATION), PUBLISHED BY TPI (TRUSS PLATE INSTITUTE, 583 D'ONOFRIO DR., SUITE 200, MADISON, WI 53719) AND WTCA (WOOD TRUSS COUNCIL OF AMERICA, 6300 ENTERPRISE LN, MADISON, WI 53719) FOR SAFETY PRACTICES PRIOR TO PERFORMING THESE FUNCTIONS. UNLESS OTHERWISE INDICATED, TOP CHORD SHALL HAVE PROPERLY ATTACHED STRUCTURAL PANELS AND BOTTOM CHORD SHALL HAVE A PROPERLY ATTACHED RIGID CEILING.

IMPORTANT FURNISH A COPY OF THIS DESIGN TO THE INSTALLATION CONTRACTOR. ALPINE ENGINEERED PRODUCTS, INC. SHALL NOT BE RESPONSIBLE FOR ANY DEVIATION FROM THIS DESIGN; ANY FAILURE TO BUILD THE TRUSS IN CONFORMANCE WITH TPI; OR FABRICATING, HANDLING, SHIPPING, INSTALLING & BRACING OF TRUSSES. DESIGN CONFORMS WITH APPLICABLE PROVISIONS OF NDS (NATIONAL DESIGN SPEC, BY AF&PA) AND TPI. ALPINE CONNECTOR PLATES ARE MADE OF 20/18/16GA (W,H/S/K) ASTM A653 GRADE 40/60 (W, K/H,S) GALV. STEEL. APPLY PLATES TO EACH FACE OF TRUSS AND, UNLESS OTHERWISE LOCATED ON THIS DESIGN, POSITION PER DRAWINGS 160A-Z. ANY INSPECTION OF PLATES FOLLOWED BY (1) SHALL BE PER ANNEX A3 OF TPI1-2002 SEC.3. A SEAL ON THIS DRAWING INDICATES ACCEPTANCE OF PROFESSIONAL ENGINEERING RESPONSIBILITY SOLELY FOR THE TRUSS COMPONENT DESIGN SHOWN. THE SUITABILITY AND USE OF THIS COMPONENT FOR ANY BUILDING IS THE RESPONSIBILITY OF THE BUILDING DESIGNER PER ANSI/TPI 1 SEC. 2.

ARTHUR R. FISHER
LICENSE
No. 59687
STATE OF FLORIDA
PROFESSIONAL ENGINEER

TC LL	20.0 PSF	REF R487-- 33381
TC DL	10.0 PSF	DATE 09/02/05
BC DL	10.0 PSF	DRW HCUSR487 05245141
BC LL	0.0 PSF	HC-ENG JB/AF
TOT.LD.	40.0 PSF	SEQN- 27283
DUR.FAC.	1.25	
SPACING	24.0"	JREF 1605487 704

(5-392-JONATHON PERRY / LOT 18 PHASE II STONEHANGE - H7AH)

Top chord 2x6 SP #2
Bot chord 2x6 SP #2
Webs 2x4 SP #3 :W2, W6 2x4 SP #2 Dense:

110 mph wind, 15.00 ft mean hgt, ASCE 7-98, CLOSED bldg, not located within 4.50 ft from roof edge, CAT II, EXP B, wind TC DL=5.0 psf, wind BC DL=5.0 psf.

End verticals not exposed to wind pressure.

(A) Continuous lateral bracing equally spaced on member.

Deflection meets L/360 live and L/240 total load.

Truss must be installed as shown with top chord up.

SPECIAL LOADS
------(LUMBER DUR.FAC.=1.25 / PLATE DUR.FAC.=1.25)
TC - From 60 PLF at 0.00 to 60 PLF at 21.29
BC - From 20 PLF at 0.00 to 20 PLF at 21.29
TC - 173 LB Conc. Load at 1.94, 3.94, 5.94, 7.94, 9.94 11.94, 13.94, 15.94, 17.94, 19.94
BC - 70 LB Conc. Load at 1.94, 3.94, 5.94, 7.94, 9.94 11.94, 13.94, 15.94, 17.94, 19.94

H = recommended connection based on manufacturer tested capacities and calculations. Conditions may exist that require different connections than indicated. Refer to manufacturer publication for additional information.

The TC of this truss shall be braced with attached spans at 24" OC in lieu of structural sheathing.

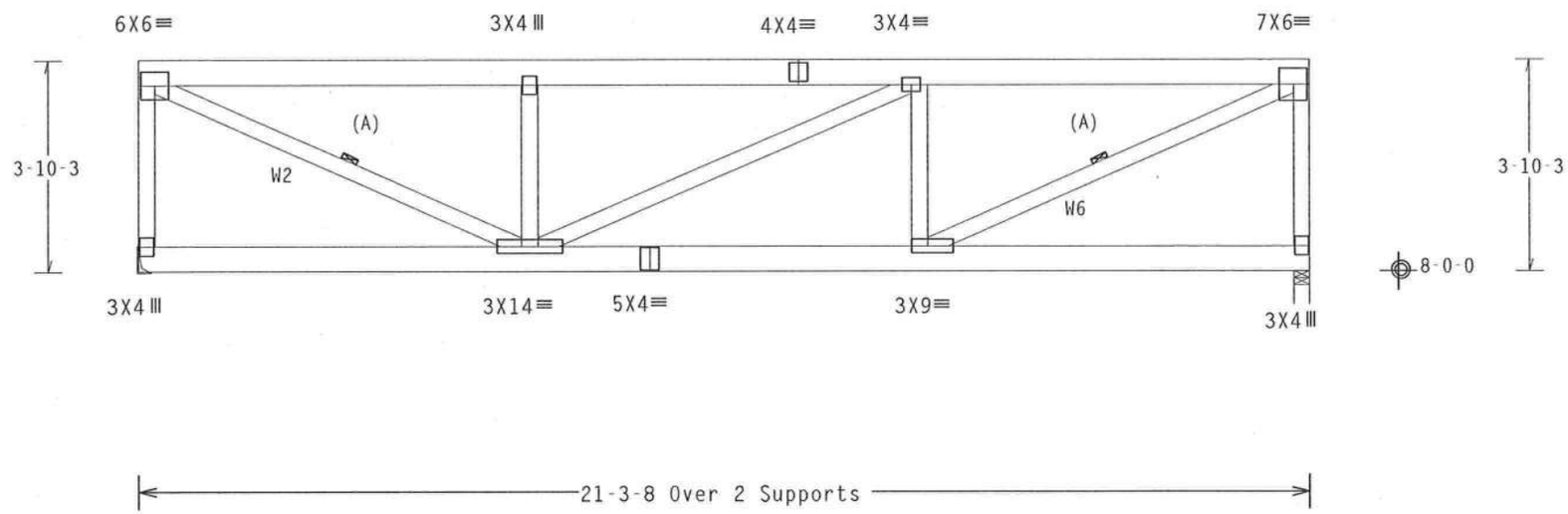

R=2034 U=746 H=Simpson HUS26
w/ (6) 10d Common, 0.148"x3.0" nails in Truss
w/ (14) 10d Common, 0.148"x3.0" nails in Girder
Girder is (1)2X6 min. So.Pine

R=2101 U=776 W=3.5"

PLT TYP. Wave TPI | Design Crit: TPI-1995(STD)/FBC | 7.04.806.16 | 01.1 | FL/-/3/-/-/R/- | Scale =.3125"/Ft.

ALPINE
Alpine Engineered Products, Inc.
1950 Marley Drive
Haines City, FL 33844

WARNING TRUSSES REQUIRE EXTREME CARE IN FABRICATION, HANDLING, SHIPPING, INSTALLING AND BRACING. REFER TO BCSI 1-03 (BUILDING COMPONENT SAFETY INFORMATION), PUBLISHED BY TPI (TRUSS PLATE INSTITUTE, 583 D'ONOFRIO DR., SUITE 200, MADISON, WI 53719) AND WTCA (WOOD TRUSS COUNCIL OF AMERICA, 6300 ENTERPRISE LN, MADISON, WI 53719) FOR SAFETY PRACTICES PRIOR TO PERFORMING THESE FUNCTIONS. UNLESS OTHERWISE INDICATED, TOP CHORD SHALL HAVE PROPERLY ATTACHED STRUCTURAL PANELS AND BOTTOM CHORD SHALL HAVE A PROPERLY ATTACHED RIGID CEILING.

IMPORTANT FURNISH A COPY OF THIS DESIGN TO THE INSTALLATION CONTRACTOR. ALPINE ENGINEERED PRODUCTS, INC. SHALL NOT BE RESPONSIBLE FOR ANY DEVIATION FROM THIS DESIGN; ANY FAILURE TO BUILD THE TRUSS IN CONFORMANCE WITH TPI; OR FABRICATING, HANDLING, SHIPPING, INSTALLING & BRACING OF TRUSSES. DESIGN CONFORMS WITH APPLICABLE PROVISIONS OF NDS (NATIONAL DESIGN SPEC. BY AF&PA) AND TPI. ALPINE CONNECTOR PLATES ARE MADE OF 20/18/16GA (W,H/S/K) ASTM A653 GRADE 40/60 (W, K/H,S) GALV. STEEL. APPLY PLATES TO EACH FACE OF TRUSS AND, UNLESS OTHERWISE LOCATED ON THIS DESIGN, POSITION PER DRAWINGS 160A-Z. ANY INSPECTION OF PLATES FOLLOWED BY (1) SHALL BE PER ANNEX A3 OF TPI1-2002 SEC.3. A SEAL ON THIS DRAWING INDICATES ACCEPTANCE OF PROFESSIONAL ENGINEERING RESPONSIBILITY SOLELY FOR THE TRUSS COMPONENT DESIGN SHOWN. THE SUITABILITY AND USE OF THIS COMPONENT FOR ANY BUILDING IS THE RESPONSIBILITY OF THE

ARTHUR R. FISHER
LICENSE
No. 59687
STATE OF
FLORIDA
PROFESSIONAL ENGINEER

TC LL	20.0 PSF	REF R487-- 33382
TC DL	10.0 PSF	DATE 09/02/05
BC DL	10.0 PSF	DRW HCUSR487 05245150
BC LL	0.0 PSF	HC-ENG JB/AF
TOT.LD.	40.0 PSF	SEQN- 27293
DUR.FAC.	1.25	

(5-392-JONATHON PERRY / LOT 16 PHASE II STONEHANGE - H1A)

THIS DWG PREPARED FROM COMPUTER INPUT LOADS & DIMENSIONS SUBMITTED BY TRUSS MFR

Top chord 2x4 SP #2 Dense
Bot chord 2x4 SP #2 Dense
Webs 2x4 SP #3

Deflection meets L/360 live and L/240 total load.

110 mph wind, 10.60 ft mean hgt, ASCE 7-98, CLOSED bldg, not located within 4.50 ft from roof edge, CAT II, EXP B, wind TC DL=5.0 psf, wind BC DL=5.0 psf.

Right end vertical not exposed to wind pressure.

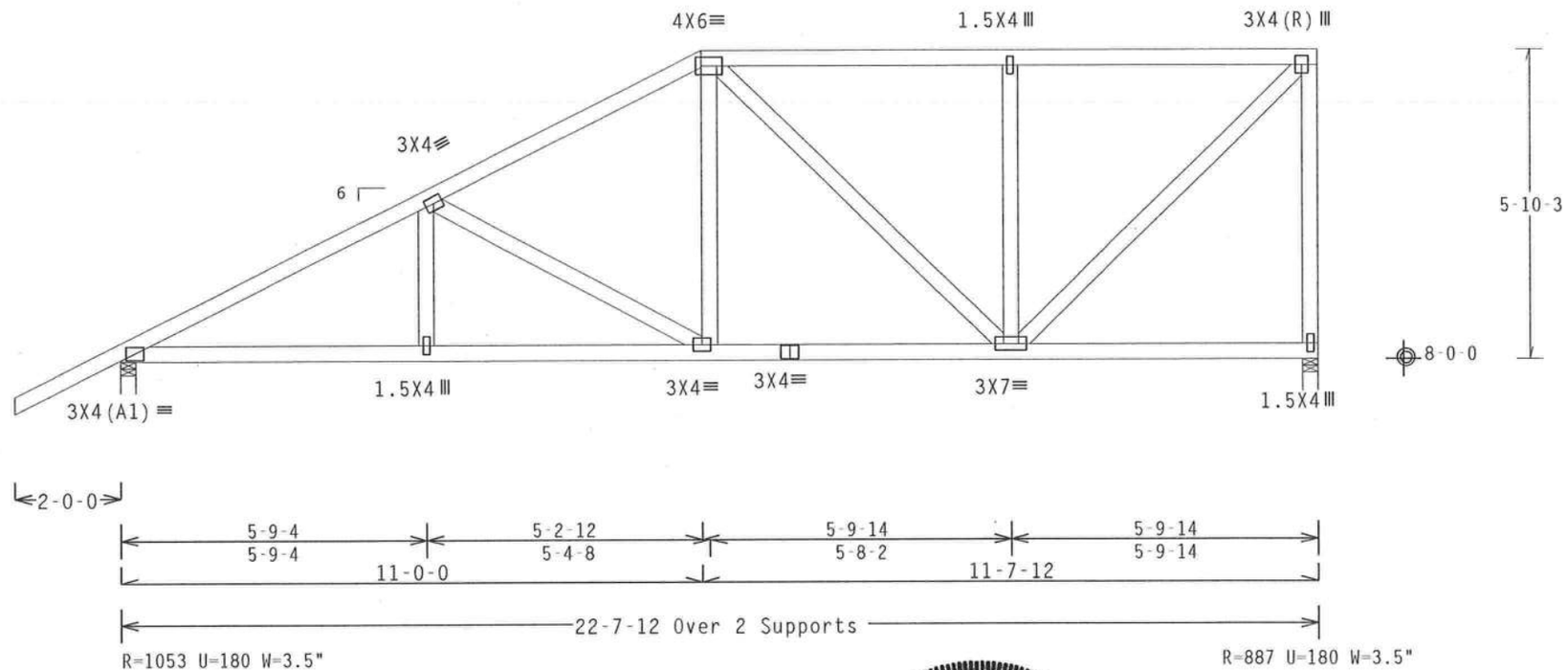

PLT TYP. Wave TPI | Design Crit: TPI-1995(STD)/FBC | 7.04 080515 | QTY:1 | FL/-/3/-/-/R/- | Scale =.3125"/Ft.

ALPINE
Alpine Engineered Products, Inc.
1950 Marley Drive

WARNING TRUSSES REQUIRE EXTREME CARE IN FABRICATION, HANDLING, SHIPPING, INSTALLING AND BRACING. REFER TO BCSI 1-03 (BUILDING COMPONENT SAFETY INFORMATION), PUBLISHED BY TPI (TRUSS PLATE INSTITUTE, 583 D'ONOFRIO DR., SUITE 200, MADISON, WI 53719) AND WTCA (WOOD TRUSS COUNCIL OF AMERICA, 6300 ENTERPRISE LN, MADISON, WI 53719) FOR SAFETY PRACTICES PRIOR TO PERFORMING THESE FUNCTIONS. UNLESS OTHERWISE INDICATED, TOP CHORD SHALL HAVE PROPERLY ATTACHED STRUCTURAL PANELS AND BOTTOM CHORD SHALL HAVE A PROPERLY ATTACHED RIGID CEILING.

IMPORTANT FURNISH A COPY OF THIS DESIGN TO THE INSTALLATION CONTRACTOR. ALPINE ENGINEERED PRODUCTS, INC. SHALL NOT BE RESPONSIBLE FOR ANY DEVIATION FROM THIS DESIGN; ANY FAILURE TO BUILD THE TRUSS IN CONFORMANCE WITH TPI; OR FABRICATING, HANDLING, SHIPPING, INSTALLING & BRACING OF TRUSSES. DESIGN CONFORMS WITH APPLICABLE PROVISIONS OF NDS (NATIONAL DESIGN SPEC. BY AF&PA) AND TPI. ALPINE CONNECTOR PLATES ARE MADE OF 20/18/16GA (W,H/S/K) ASTM A653 GRADE 40/60 (H, K/H,S) GALV. STEEL. APPLY PLATES TO EACH FACE OF TRUSS AND, UNLESS OTHERWISE LOCATED ON THIS DESIGN, POSITION PER DRAWINGS 160A-Z. ANY INSPECTION OF PLATES FOLLOWED BY (1) SHALL BE PER ANNEX A3 OF TPI1-2002 SEC.3. A SEAL ON THIS DRAWING INDICATES ACCEPTANCE OF PROFESSIONAL ENGINEERING RESPONSIBILITY SOLELY FOR THE TRUSS COMPONENT DESIGN SHOWN. THE SUITABILITY AND USE OF THIS COMPONENT FOR ANY BUILDING IS THE RESPONSIBILITY OF THE

ARTHUR R. FISHER
LICENSE
No. 59687
STATE OF FLORIDA
PROFESSIONAL ENGINEER

TC LL	20.0 PSF	REF R487-- 33383
TC DL	10.0 PSF	DATE 09/02/05
BC DL	10.0 PSF	DRW HCUSR487 05245163
BC LL	0.0 PSF	HC-ENG GDL/AF *
TOT.LD.	40.0 PSF	SEQN- 28839
DUR.FAC.	1.25	

(5-392-JONATHON PERRY / LOT 16 PHASE II STONEHARGE - H9A)

Top chord 2x4 SP #2 Dense
Bot chord 2x4 SP #2 Dense
Webs 2x4 SP #3

Deflection meets L/360 live and L/240 total load.

110 mph wind, 10.10 ft mean hgt, ASCE 7-98, CLOSED bldg, not located within 4.50 ft from roof edge, CAT II, EXP B, wind TC DL=5.0 psf, wind BC DL=5.0 psf.

Right end vertical not exposed to wind pressure.

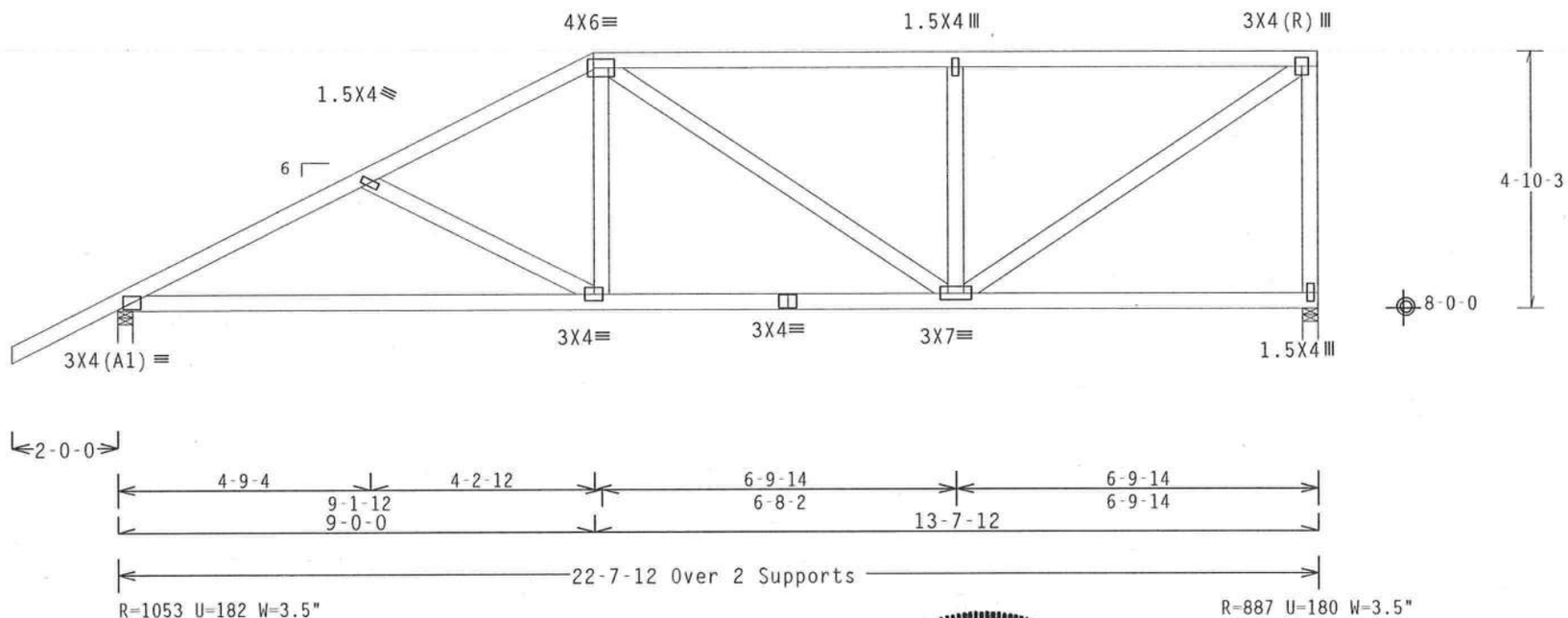

PLT TYP. Wave TPI | Design Crit: TPI-1995(STD)/FBC | 7.04.[illegible] | QTY:1 | FL/-/3/-/-/R/- | Scale =.3125"/Ft.

ALPINE
Alpine Engineered Products, Inc.
1950 Marley Drive

WARNING TRUSSES REQUIRE EXTREME CARE IN FABRICATION, HANDLING, SHIPPING, INSTALLING AND BRACING. REFER TO BCSI 1-03 (BUILDING COMPONENT SAFETY INFORMATION), PUBLISHED BY TPI (TRUSS PLATE INSTITUTE, 583 D'ONOFRIO DR., SUITE 200, MADISON, WI 53719) AND WTCA (WOOD TRUSS COUNCIL OF AMERICA, 6300 ENTERPRISE LN, MADISON, WI 53719) FOR SAFETY PRACTICES PRIOR TO PERFORMING THESE FUNCTIONS. UNLESS OTHERWISE INDICATED, TOP CHORD SHALL HAVE PROPERLY ATTACHED STRUCTURAL PANELS AND BOTTOM CHORD SHALL HAVE A PROPERLY ATTACHED RIGID CEILING.

IMPORTANT FURNISH A COPY OF THIS DESIGN TO THE INSTALLATION CONTRACTOR. ALPINE ENGINEERED PRODUCTS, INC. SHALL NOT BE RESPONSIBLE FOR ANY DEVIATION FROM THIS DESIGN; ANY FAILURE TO BUILD THE TRUSS IN CONFORMANCE WITH TPI; OR FABRICATING, HANDLING, SHIPPING, INSTALLING & BRACING OF TRUSSES. DESIGN CONFORMS WITH APPLICABLE PROVISIONS OF NDS (NATIONAL DESIGN SPEC. BY AF&PA) AND TPI. ALPINE CONNECTOR PLATES ARE MADE OF 20/18/16GA (W,H/S/K) ASTM A653 GRADE 40/60 (W, K/H,S) GALV. STEEL. APPLY PLATES TO EACH FACE OF TRUSS AND, UNLESS OTHERWISE LOCATED ON THIS DESIGN, POSITION PER DRAWINGS 160A-Z. ANY INSPECTION OF PLATES FOLLOWED BY (1) SHALL BE PER ANNEX A3 OF TPI1-2002 SEC.3. A SEAL ON THIS DRAWING INDICATES ACCEPTANCE OF PROFESSIONAL ENGINEERING RESPONSIBILITY SOLELY FOR THE TRUSS COMPONENT DESIGN SHOWN. THE SUITABILITY AND USE OF THIS COMPONENT FOR ANY BUILDING IS THE RESPONSIBILITY OF THE

ARTHUR R. FISHER
LICENSE
No. 59687
STATE OF FLORIDA
PROFESSIONAL ENGINEER

TC LL	20.0 PSF	REF R487-- 33384
TC DL	10.0 PSF	DATE 09/02/05
BC DL	10.0 PSF	DRW HCUSR487 05245164
BC LL	0.0 PSF	HC-ENG GDL/AF *
TOT.LD.	40.0 PSF	SEQN- 28844
DUR.FAC.	1.25	

(5-392-JONATHON PERRY / LOT 18 PHASE II STONEHANGE - H9AM)

Top chord 2x4 SP #2 Dense :T2 2x6 SP #2:
Bot chord 2x4 SP #2 Dense
Webs 2x4 SP #3

End verticals not exposed to wind pressure.

Deflection meets L/360 live and L/240 total load.

110 mph wind, 11.75 ft mean hgt, ASCE 7-98, CLOSED bldg, not located within 4.50 ft from roof edge, CAT II, EXP B, wind TC DL=5.0 psf, wind BC DL=5.0 psf.

H = recommended connection based on manufacturer tested capacities and calculations. Conditions may exist that require different connections than indicated. Refer to manufacturer publication for additional information.

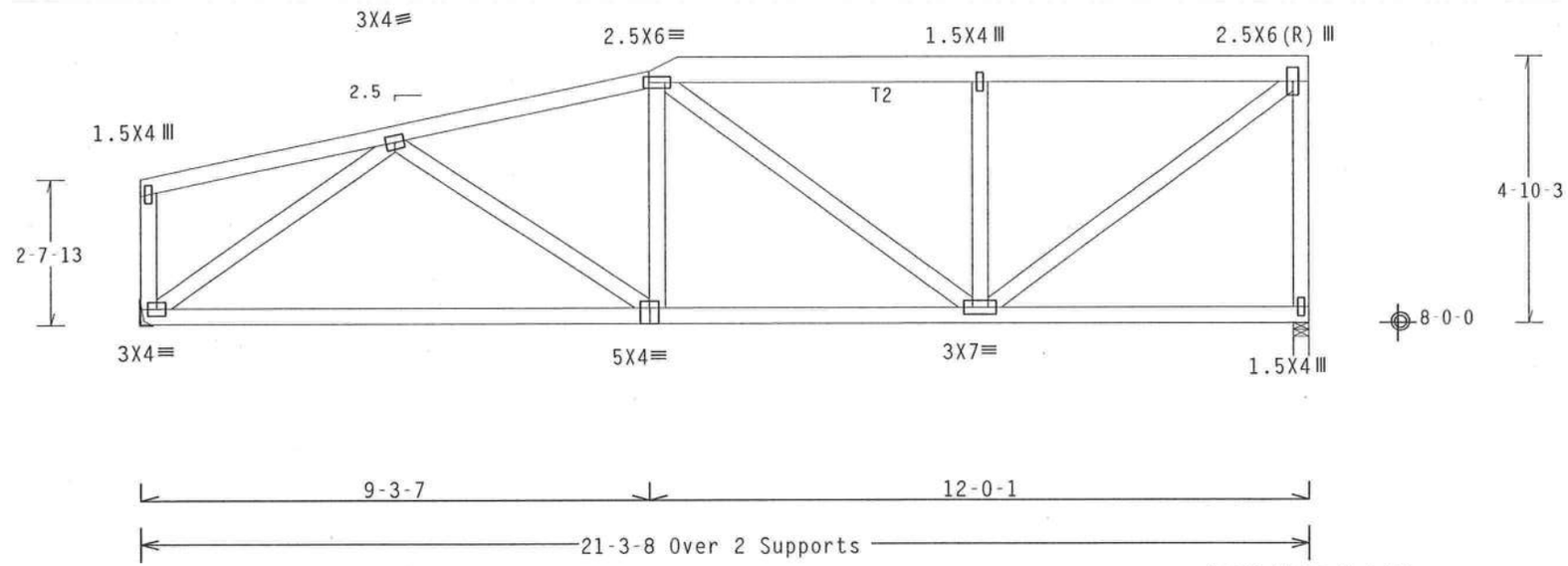

R=852 U=180 H=Simpson LUS26
w/ (4) 10d Common, 0.148"x3.0" nails in Truss
w/ (4) 10d Common, 0.148"x3.0" nails in Girder
Girder is (1)2X6 min. So.Pine

R=852 U=180 W=3.5"

PLT TYP. Wave TPI | Design Crit: TPI-1995(STD)/FBC | 7.04 0805.16 | QTY:1 | FL/-/3/-/-/R/- | Scale =.3125"/Ft.

ALPINE
Alpine Engineered Products, Inc.
1950 Marley Drive
Haines City, Fl. 33844

WARNING TRUSSES REQUIRE EXTREME CARE IN FABRICATION, HANDLING, SHIPPING, INSTALLING AND BRACING. REFER TO BCSI 1-03 (BUILDING COMPONENT SAFETY INFORMATION), PUBLISHED BY TPI (TRUSS PLATE INSTITUTE, 583 D'ONOFRIO DR., SUITE 200, MADISON, WI 53719) AND WTCA (WOOD TRUSS COUNCIL OF AMERICA, 6300 ENTERPRISE LN, MADISON, WI 53719) FOR SAFETY PRACTICES PRIOR TO PERFORMING THESE FUNCTIONS. UNLESS OTHERWISE INDICATED, TOP CHORD SHALL HAVE PROPERLY ATTACHED STRUCTURAL PANELS AND BOTTOM CHORD SHALL HAVE A PROPERLY ATTACHED RIGID CEILING.

IMPORTANT FURNISH A COPY OF THIS DESIGN TO THE INSTALLATION CONTRACTOR. ALPINE ENGINEERED PRODUCTS, INC. SHALL NOT BE RESPONSIBLE FOR ANY DEVIATION FROM THIS DESIGN; ANY FAILURE TO BUILD THE TRUSS IN CONFORMANCE WITH TPI; OR FABRICATING, HANDLING, SHIPPING, INSTALLING & BRACING OF TRUSSES. DESIGN CONFORMS WITH APPLICABLE PROVISIONS OF NDS (NATIONAL DESIGN SPEC. BY AF&PA) AND TPI. ALPINE CONNECTOR PLATES ARE MADE OF 20/18/16GA (W,H/S/K) ASTM A653 GRADE 40/60 (W, K/H,S) GALV. STEEL. APPLY PLATES TO EACH FACE OF TRUSS AND, UNLESS OTHERWISE LOCATED ON THIS DESIGN, POSITION PER DRAWINGS 160A-Z. ANY INSPECTION OF PLATES FOLLOWED BY (I) SHALL BE PER ANNEX A3 OF TPI1-2002 SEC.3. A SEAL ON THIS DRAWING INDICATES ACCEPTANCE OF PROFESSIONAL ENGINEERING RESPONSIBILITY SOLELY FOR THE TRUSS COMPONENT DESIGN SHOWN. THE SUITABILITY AND USE OF THIS COMPONENT FOR ANY BUILDING IS THE RESPONSIBILITY OF THE

ARTHUR R. FISHER
LICENSE
No. 59687
STATE OF FLORIDA
PROFESSIONAL ENGINEER

TC LL	20.0 PSF	REF R487-- 33385
TC DL	10.0 PSF	DATE 09/02/05
BC DL	10.0 PSF	DRW HCUSR487 05245154
BC LL	0.0 PSF	HC-ENG JB/AF
TOT.LD.	40.0 PSF	SEQN- 27298
DUR.FAC.	1.25	

(5-392-JONATHON PERRY / LOT 18 PHASE II STONEHANGE - HIAM)

THIS DWG PROVIDED FROM COMPUTER INPUT LOADS & DIMENSIONS SUBMITTED BY TRUSS MFR

Top chord 2x4 SP #2 Dense
Bot chord 2x4 SP #2 Dense
Webs 2x4 SP #3

End verticals not exposed to wind pressure.

Deflection meets L/360 live and L/240 total load.

110 mph wind, 12.25 ft mean hgt, ASCE 7-98, CLOSED bldg, not located within 4.50 ft from roof edge, CAT II, EXP B, wind TC DL=5.0 psf, wind BC DL=5.0 psf.

H = recommended connection based on manufacturer tested capacities and calculations. Conditions may exist that require different connections than indicated. Refer to manufacturer publication for additional information.

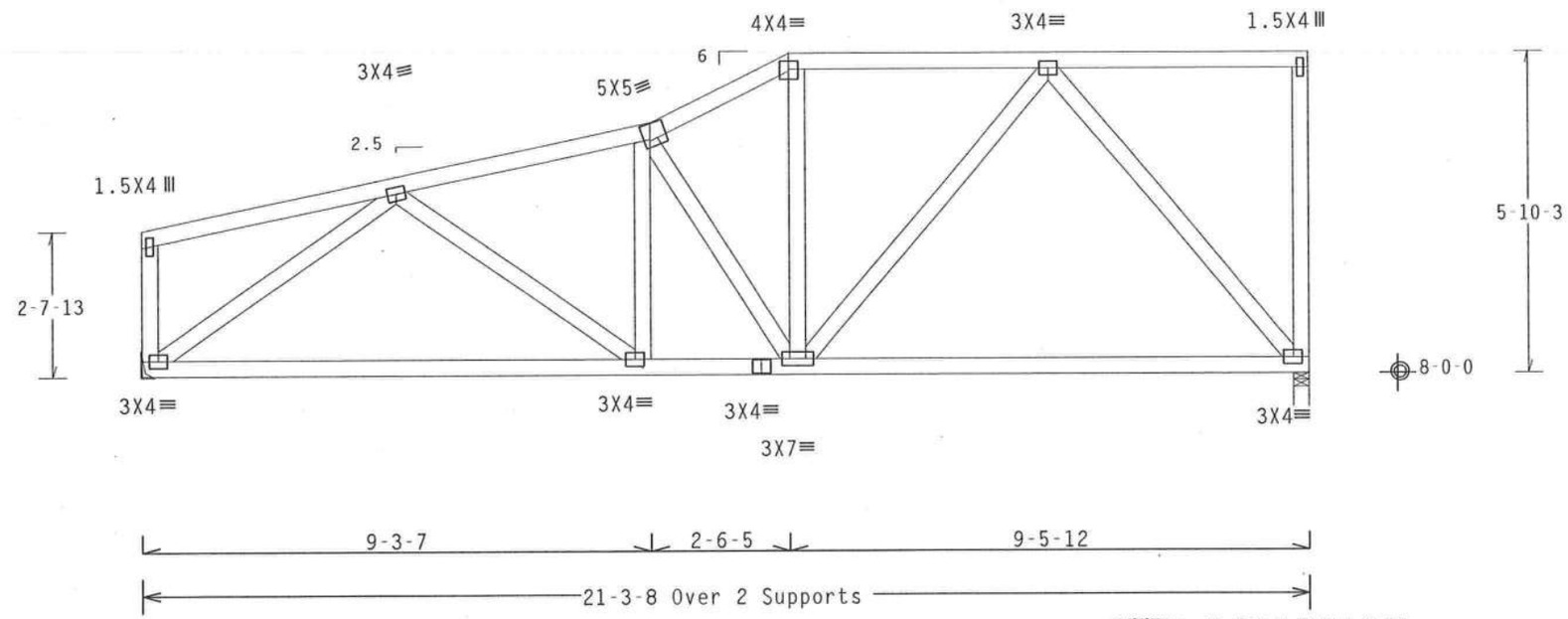

R=852 U=180 H=Simpson LUS26
w/ (4) 10d Common, 0.148"x3.0" nails in Truss
w/ (4) 10d Common, 0.148"x3.0" nails in Girder
Girder is (1)2X6 min. So.Pine

R=852 U=193 W=3.5"

PLT TYP. Wave TPI Design Crit: TPI-1995(STD)/FBC 7.04 0805.16 QTY: 1 FL/-/3/-/-/R/- Scale =.3125"/Ft.

ALPINE
Alpine Engineered Products, Inc.
1950 Marley Drive

WARNING TRUSSES REQUIRE EXTREME CARE IN FABRICATION, HANDLING, SHIPPING, INSTALLING AND BRACING. REFER TO BCSI 1-03 (BUILDING COMPONENT SAFETY INFORMATION), PUBLISHED BY TPI (TRUSS PLATE INSTITUTE, 583 D'ONOFRIO DR., SUITE 200, MADISON, WI 53719) AND WTCA (WOOD TRUSS COUNCIL OF AMERICA, 6300 ENTERPRISE LN, MADISON, WI 53719) FOR SAFETY PRACTICES PRIOR TO PERFORMING THESE FUNCTIONS. UNLESS OTHERWISE INDICATED, TOP CHORD SHALL HAVE PROPERLY ATTACHED STRUCTURAL PANELS AND BOTTOM CHORD SHALL HAVE A PROPERLY ATTACHED RIGID CEILING.

IMPORTANT FURNISH A COPY OF THIS DESIGN TO THE INSTALLATION CONTRACTOR. ALPINE ENGINEERED PRODUCTS, INC. SHALL NOT BE RESPONSIBLE FOR ANY DEVIATION FROM THIS DESIGN; ANY FAILURE TO BUILD THE TRUSS IN CONFORMANCE WITH TPI; OR FABRICATING, HANDLING, SHIPPING, INSTALLING & BRACING OF TRUSSES. DESIGN CONFORMS WITH APPLICABLE PROVISIONS OF NDS (NATIONAL DESIGN SPEC. BY AF&PA) AND TPI. ALPINE CONNECTOR PLATES ARE MADE OF 20/18/16GA (W,H/S/K) ASTM A653 GRADE 40/60 (W, K/H,S) GALV. STEEL. APPLY PLATES TO EACH FACE OF TRUSS AND, UNLESS OTHERWISE LOCATED ON THIS DESIGN, POSITION PER DRAWINGS 160A-Z. ANY INSPECTION OF PLATES FOLLOWED BY (1) SHALL BE PER ANNEX A3 OF TPI1-2002 SEC.3. A SEAL ON THIS DRAWING INDICATES ACCEPTANCE OF PROFESSIONAL ENGINEERING RESPONSIBILITY SOLELY FOR THE TRUSS COMPONENT DESIGN SHOWN. THE SUITABILITY AND USE OF THIS COMPONENT FOR ANY BUILDING IS THE RESPONSIBILITY OF THE

ARTHUR R. FISHER
LICENSE
No. 59687
STATE OF FLORIDA
PROFESSIONAL ENGINEER

TC LL	20.0 PSF	REF R487-- 33386
TC DL	10.0 PSF	DATE 09/02/05
BC DL	10.0 PSF	DRW HCUSR487 05245155
BC LL	0.0 PSF	HC-ENG JB/AF
TOT.LD.	40.0 PSF	SEQN- 27299
DUR.FAC.	1.25	
SPACING	24.0"	JREF 160E487 704

(5-392-JONATHON PERRY / LOT 18 PHASE II STONEHARGE - HISAH)

Top chord 2x4 SP #2 Dense
Bot chord 2x4 SP #2 Dense
Webs 2x4 SP #3

End verticals not exposed to wind pressure.

Deflection meets L/360 live and L/240 total load.

110 mph wind, 12.75 ft mean hgt, ASCE 7-98, CLOSED bldg, not located within 4.50 ft from roof edge, CAT II, EXP B, wind TC DL=5.0 psf, wind BC DL=5.0 psf.

H = recommended connection based on manufacturer tested capacities and calculations. Conditions may exist that require different connections than indicated. Refer to manufacturer publication for additional information.

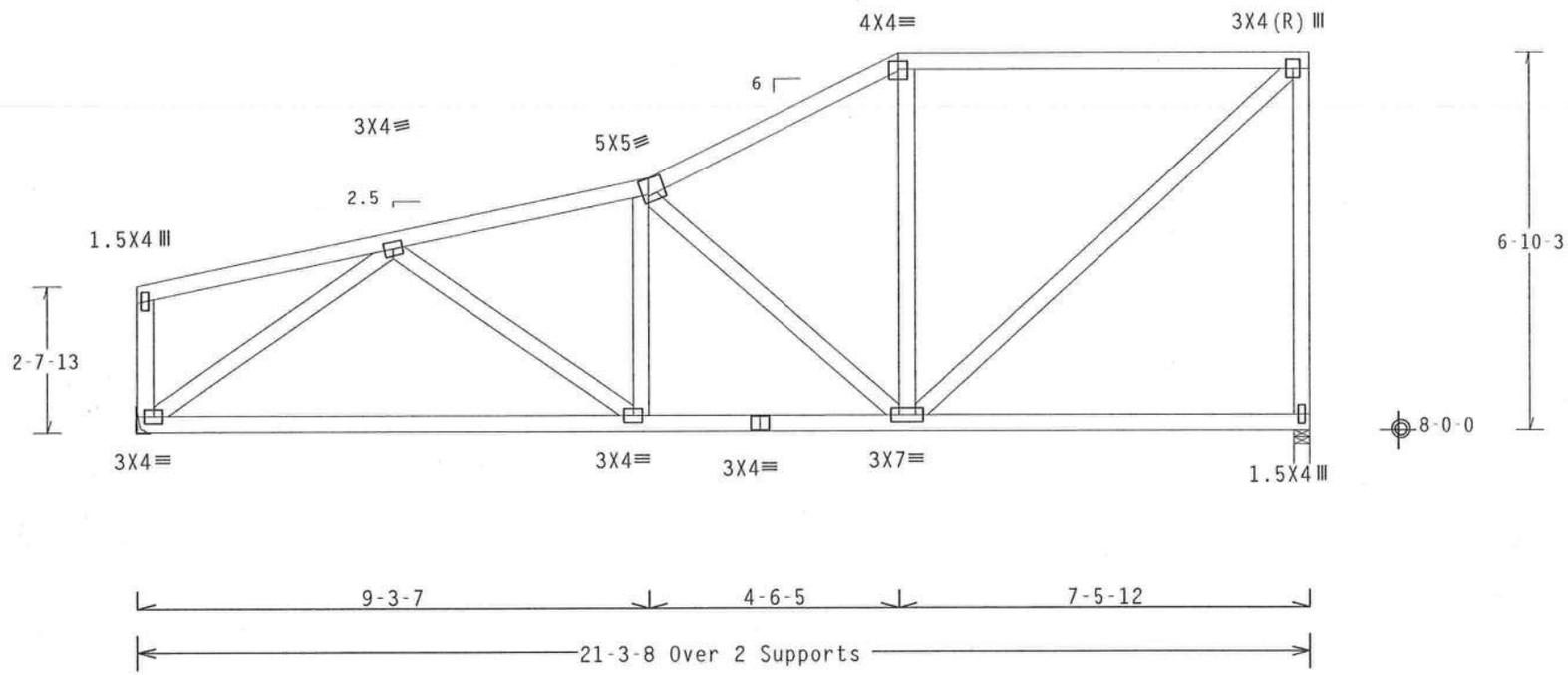

R=852 U=180 H=Simpson LUS26
w/ (4) 10d Common, 0.148"x3.0" nails in Truss
w/ (4) 10d Common, 0.148"x3.0" nails in Girder
Girder is (1)2X6 min. So.Pine

R=852 U=207 W=3.5"

PLT TYP. Wave TPI Design Crit: TPI-1995(STD)/FBC 7.04.0806.16 QTY.1 FL/-/3/-/-/R/- Scale =.3125"/Ft.

ALPINE
Alpine Engineered Products, Inc.
1950 Marley Drive

WARNING TRUSSES REQUIRE EXTREME CARE IN FABRICATION, HANDLING, SHIPPING, INSTALLING AND BRACING. REFER TO BCSI 1-03 (BUILDING COMPONENT SAFETY INFORMATION), PUBLISHED BY TPI (TRUSS PLATE INSTITUTE, 583 D'ONOFRIO DR., SUITE 200, MADISON, WI 53719) AND WTCA (WOOD TRUSS COUNCIL OF AMERICA, 6300 ENTERPRISE LN, MADISON, WI 53719) FOR SAFETY PRACTICES PRIOR TO PERFORMING THESE FUNCTIONS. UNLESS OTHERWISE INDICATED, TOP CHORD SHALL HAVE PROPERLY ATTACHED STRUCTURAL PANELS AND BOTTOM CHORD SHALL HAVE A PROPERLY ATTACHED RIGID CEILING.

IMPORTANT FURNISH A COPY OF THIS DESIGN TO THE INSTALLATION CONTRACTOR. ALPINE ENGINEERED PRODUCTS, INC. SHALL NOT BE RESPONSIBLE FOR ANY DEVIATION FROM THIS DESIGN; ANY FAILURE TO BUILD THE TRUSS IN CONFORMANCE WITH TPI; OR FABRICATING, HANDLING, SHIPPING, INSTALLING & BRACING OF TRUSSES. DESIGN CONFORMS WITH APPLICABLE PROVISIONS OF NDS (NATIONAL DESIGN SPEC. BY AF&PA) AND TPI. ALPINE CONNECTOR PLATES ARE MADE OF 20/18/16GA (U,H/S/K) ASTM A653 GRADE 40/60 (W, K/H,S) GALV. STEEL. APPLY PLATES TO EACH FACE OF TRUSS AND, UNLESS OTHERWISE LOCATED ON THIS DESIGN, POSITION PER DRAWINGS 160A-Z. ANY INSPECTION OF PLATES FOLLOWED BY (1) SHALL BE PER ANNEX A3 OF TPI1-2002 SEC.3. A SEAL ON THIS DRAWING INDICATES ACCEPTANCE OF PROFESSIONAL ENGINEERING RESPONSIBILITY SOLELY FOR THE TRUSS COMPONENT DESIGN SHOWN. THE SUITABILITY AND USE OF THIS COMPONENT FOR ANY BUILDING IS THE RESPONSIBILITY OF THE

ARTHUR R. FISHER
LICENSE
No. 59687
STATE OF
FLORIDA
PROFESSIONAL ENGINEER

TC LL	20.0 PSF	REF R487-- 33387
TC DL	10.0 PSF	DATE 09/02/05
BC DL	10.0 PSF	DRW HCUSR487 05245156
BC LL	0.0 PSF	HC-ENG JB/AF
TOT.LD.	40.0 PSF	SEQN- 27300
DUR.FAC.	1.25	

(5-392-JONATHON PERRY / LOT 18 PHASE II STONEHANGE - H7A)

Top chord 2x4 SP #2 Dense
Bot chord 2x4 SP #2 Dense
Webs 2x4 SP #3

#1 hip supports 7-0-0 jacks with no webs.

Deflection meets L/360 live and L/240 total load.

110 mph wind, 15.00 ft mean hgt, ASCE 7-98, CLOSED bldg, Located anywhere in roof, CAT II, EXP B, wind TC DL=5.0 psf, wind BC DL=5.0 psf.

Right end vertical not exposed to wind pressure.

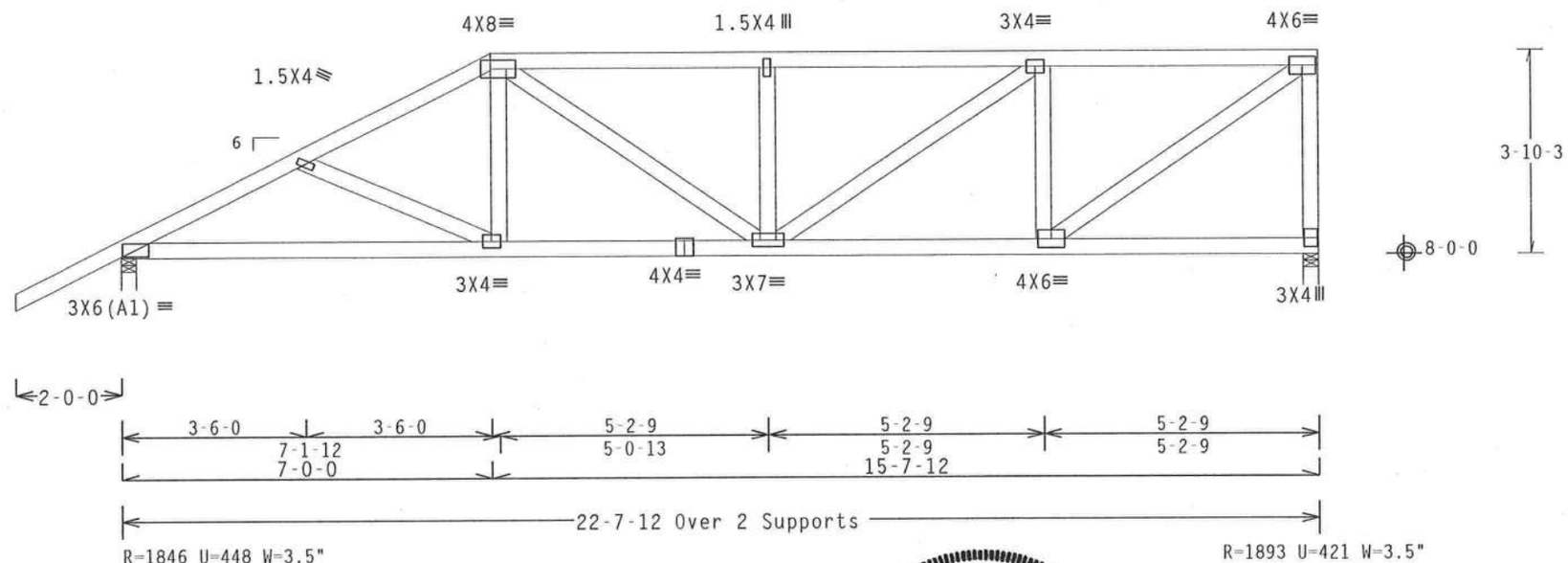

PLT TYP. Wave TPI | Design Crit: TPI-1995(STD)/FBC | 7.04 | 805.16 | QTY:1 | FL/-/3/-/-/R/- | Scale =.3125"/Ft.

ALPINE
Alpine Engineered Products, Inc.
1950 Marley Drive

WARNING TRUSSES REQUIRE EXTREME CARE IN FABRICATION, HANDLING, SHIPPING, INSTALLING AND BRACING. REFER TO BCSI 1-03 (BUILDING COMPONENT SAFETY INFORMATION), PUBLISHED BY TPI (TRUSS PLATE INSTITUTE, 583 D'ONOFRIO DR., SUITE 200, MADISON, WI 53719) AND WTCA (WOOD TRUSS COUNCIL OF AMERICA, 6300 ENTERPRISE LN, MADISON, WI 53719) FOR SAFETY PRACTICES PRIOR TO PERFORMING THESE FUNCTIONS. UNLESS OTHERWISE INDICATED, TOP CHORD SHALL HAVE PROPERLY ATTACHED STRUCTURAL PANELS AND BOTTOM CHORD SHALL HAVE A PROPERLY ATTACHED RIGID CEILING.

IMPORTANTFURNISH A COPY OF THIS DESIGN TO THE INSTALLATION CONTRACTOR. ALPINE ENGINEERED PRODUCTS, INC. SHALL NOT BE RESPONSIBLE FOR ANY DEVIATION FROM THIS DESIGN; ANY FAILURE TO BUILD THE TRUSS IN CONFORMANCE WITH TPI; OR FABRICATING, HANDLING, SHIPPING, INSTALLING & BRACING OF TRUSSES. DESIGN CONFORMS WITH APPLICABLE PROVISIONS OF NDS (NATIONAL DESIGN SPEC, BY AF&PA) AND TPI. ALPINE CONNECTOR PLATES ARE MADE OF 20/18/16GA (W,H/S/K) ASTM A653 GRADE 40/60 (W, K/H,S) GALV. STEEL. APPLY PLATES TO EACH FACE OF TRUSS AND, UNLESS OTHERWISE LOCATED ON THIS DESIGN, POSITION PER DRAWINGS 160A-Z. ANY INSPECTION OF PLATES FOLLOWED BY (1) SHALL BE PER ANNEX A3 OF TPI1-2002 SEC.3. A SEAL ON THIS DRAWING INDICATES ACCEPTANCE OF PROFESSIONAL ENGINEERING RESPONSIBILITY SOLELY FOR THE TRUSS COMPONENT DESIGN SHOWN. THE SUITABILITY AND USE OF THIS COMPONENT FOR ANY BUILDING IS THE RESPONSIBILITY OF THE

ARTHUR R. FISHER
LICENSE
No. 59687
STATE OF FLORIDA
PROFESSIONAL ENGINEER

TC LL	20.0 PSF	REF R487-- 33388
TC DL	10.0 PSF	DATE 09/02/05
BC DL	10.0 PSF	DRW HCUSR487 05245165
BC LL	0.0 PSF	HC-ENG GDL/AF
TOT.LD.	40.0 PSF	SEQN- 28858
DUR.FAC.	1.25	

(5-392-JONATHON PERRY / LOT 18 PHASE II STONEHANGE - HI7AT)

Top chord 2x4 SP #2 Dense
Bot chord 2x4 SP #2 Dense
Webs 2x4 SP #3

(A) Continuous lateral bracing equally spaced on member.

110 mph wind, 12.10 ft mean hgt, ASCE 7-98, CLOSED bldg, not located within 4.50 ft from roof edge, CAT II, EXP B, wind TC DL=5.0 psf, wind BC DL=5.0 psf.

Deflection meets L/360 live and L/240 total load.

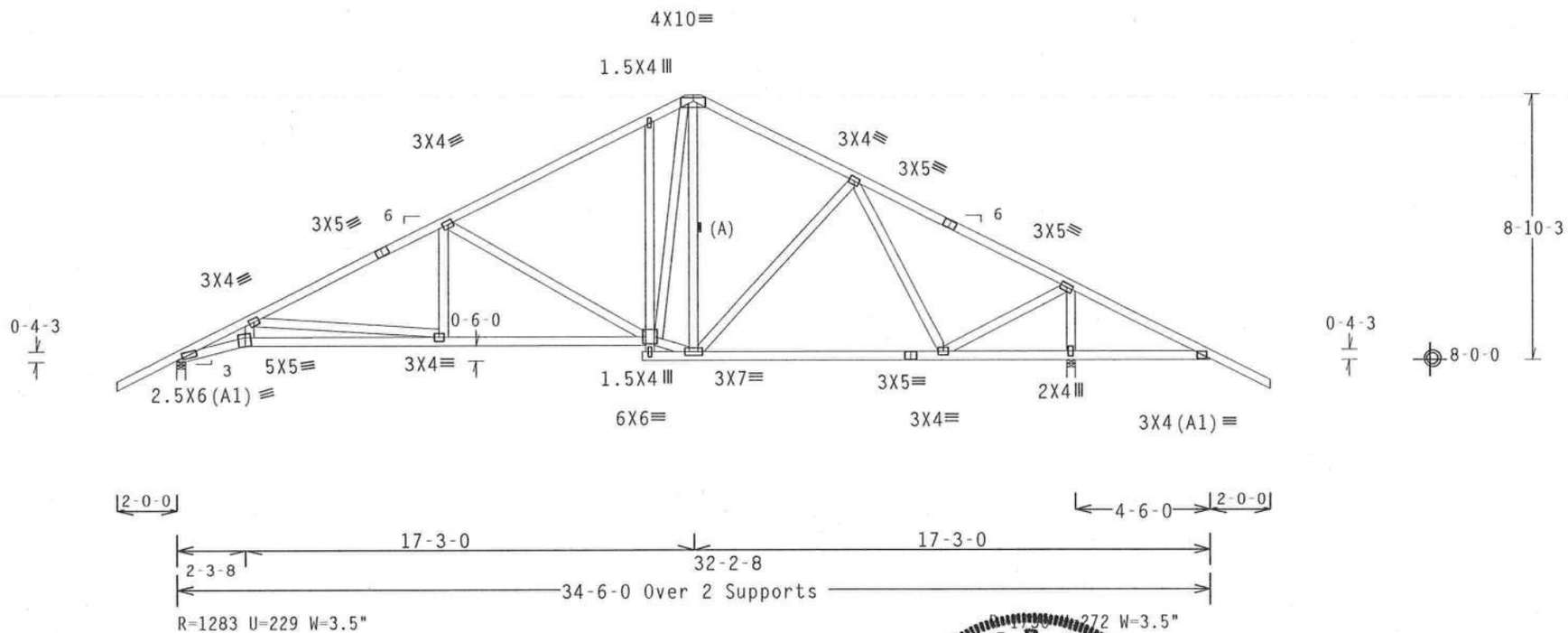

PLT TYP. Wave TPI | Design Crit: TPI-1995(STD)/FBC | 7.04.5805.16 | QTY 1 | FL/-/3/-/-/R/- | Scale =.1875"/Ft.

ALPINE
Alpine Engineered Products, Inc.
1950 Marley Drive

WARNING TRUSSES REQUIRE EXTREME CARE IN FABRICATION, HANDLING, SHIPPING, INSTALLING AND BRACING. REFER TO BCSI 1-03 (BUILDING COMPONENT SAFETY INFORMATION), PUBLISHED BY TPI (TRUSS PLATE INSTITUTE, 583 D'ONOFRIO DR., SUITE 200, MADISON, WI 53719) AND WTCA (WOOD TRUSS COUNCIL OF AMERICA, 6300 ENTERPRISE LN, MADISON, WI 53719) FOR SAFETY PRACTICES PRIOR TO PERFORMING THESE FUNCTIONS. UNLESS OTHERWISE INDICATED, TOP CHORD SHALL HAVE PROPERLY ATTACHED STRUCTURAL PANELS AND BOTTOM CHORD SHALL HAVE A PROPERLY ATTACHED RIGID CEILING.

IMPORTANT FURNISH A COPY OF THIS DESIGN TO THE INSTALLATION CONTRACTOR. ALPINE ENGINEERED PRODUCTS, INC. SHALL NOT BE RESPONSIBLE FOR ANY DEVIATION FROM THIS DESIGN; ANY FAILURE TO BUILD THE TRUSS IN CONFORMANCE WITH TPI; OR FABRICATING, HANDLING, SHIPPING, INSTALLING & BRACING OF TRUSSES. DESIGN CONFORMS WITH APPLICABLE PROVISIONS OF NDS (NATIONAL DESIGN SPEC. BY AF&PA) AND TPI. ALPINE CONNECTOR PLATES ARE MADE OF 20/18/16GA (W,H/S/K) ASTM A653 GRADE 40/60 (W, K/H,S) GALV. STEEL. APPLY PLATES TO EACH FACE OF TRUSS AND, UNLESS OTHERWISE LOCATED ON THIS DESIGN, POSITION PER DRAWINGS 160A-Z. ANY INSPECTION OF PLATES FOLLOWED BY (I) SHALL BE PER ANNEX A3 OF TPI1-2002 SEC.3. A SEAL ON THIS DRAWING INDICATES ACCEPTANCE OF PROFESSIONAL ENGINEERING RESPONSIBILITY SOLELY FOR THE TRUSS COMPONENT DESIGN SHOWN. THE SUITABILITY AND USE OF THIS COMPONENT FOR ANY BUILDING IS THE RESPONSIBILITY OF THE

ARTHUR R. FISHER
LICENSE
No. 59687
STATE OF FLORIDA
PROFESSIONAL ENGINEER

TC LL	20.0 PSF	REF R487-- 33389
TC DL	10.0 PSF	DATE 09/02/05
BC DL	10.0 PSF	DRW HCUSR487 05245145
BC LL	0.0 PSF	HC-ENG JB/AF *
TOT.LD.	40.0 PSF	SEQN- 27287
DUR.FAC.	1.25	

(5-392-JONATHON PERRY / LOT 18 PHASE II STONEHANGE - H15A1)

Top chord 2x4 SP #2 Dense
Bot chord 2x4 SP #2 Dense
Webs 2x4 SP #3

Deflection meets L/360 live and L/240 total load.

110 mph wind, 11.60 ft mean hgt, ASCE 7-98, CLOSED bldg, not located within 4.50 ft from roof edge, CAT II, EXP B, wind TC DL=5.0 psf, wind BC DL=5.0 psf.

Right end vertical not exposed to wind pressure.

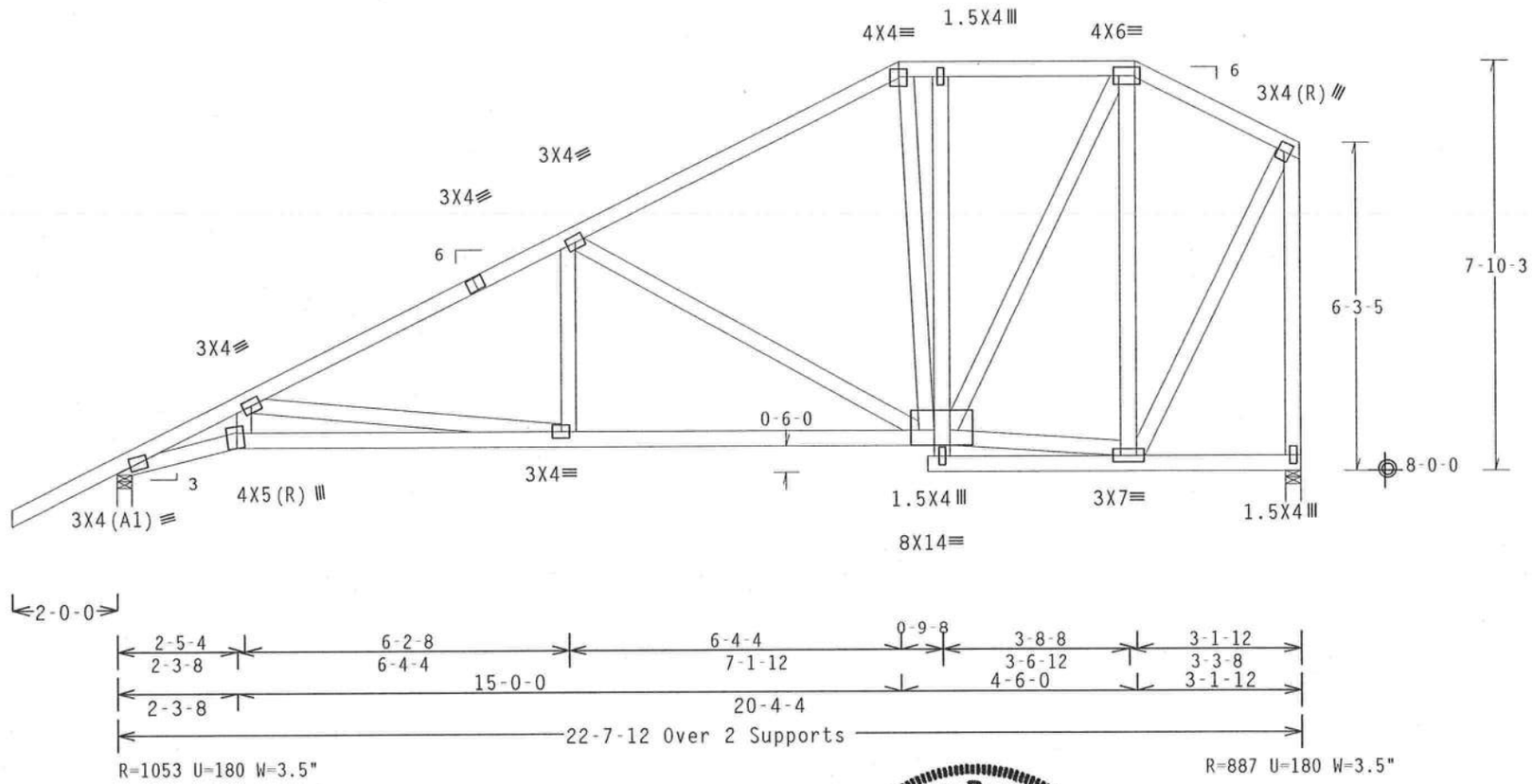

PLT TYP. Wave TPI | Design Crit: TPI-1995(STD)/FBC | 7.04.6305.16 | QTY 1 | FL/-/3/-/-/R/- | Scale =.3125"/Ft.

ALPINE
Alpine Engineered Products, Inc.
1950 Marley Drive

WARNING TRUSSES REQUIRE EXTREME CARE IN FABRICATION, HANDLING, SHIPPING, INSTALLING AND BRACING. REFER TO BCSI 1-03 (BUILDING COMPONENT SAFETY INFORMATION), PUBLISHED BY TPI (TRUSS PLATE INSTITUTE, 583 D'ONOFRIO DR., SUITE 200, MADISON, WI 53719) AND WTCA (WOOD TRUSS COUNCIL OF AMERICA, 6300 ENTERPRISE LN, MADISON, WI 53719) FOR SAFETY PRACTICES PRIOR TO PERFORMING THESE FUNCTIONS. UNLESS OTHERWISE INDICATED, TOP CHORD SHALL HAVE PROPERLY ATTACHED STRUCTURAL PANELS AND BOTTOM CHORD SHALL HAVE A PROPERLY ATTACHED RIGID CEILING.

IMPORTANT FURNISH A COPY OF THIS DESIGN TO THE INSTALLATION CONTRACTOR. ALPINE ENGINEERED PRODUCTS, INC. SHALL NOT BE RESPONSIBLE FOR ANY DEVIATION FROM THIS DESIGN; ANY FAILURE TO BUILD THE TRUSS IN CONFORMANCE WITH TPI; OR FABRICATING, HANDLING, SHIPPING, INSTALLING & BRACING OF TRUSSES. DESIGN CONFORMS WITH APPLICABLE PROVISIONS OF NDS (NATIONAL DESIGN SPEC, BY AF&PA) AND TPI. ALPINE CONNECTOR PLATES ARE MADE OF 20/18/16GA (M,H/S/X) ASTM A653 GRADE 40/60 (M, K/H,S) GALV. STEEL. APPLY PLATES TO EACH FACE OF TRUSS AND, UNLESS OTHERWISE LOCATED ON THIS DESIGN, POSITION PER DRAWINGS 160A-Z. ANY INSPECTION OF PLATES FOLLOWED BY (1) SHALL BE PER ANNEX A3 OF TPI1-2002 SEC.3. A SEAL ON THIS DRAWING INDICATES ACCEPTANCE OF PROFESSIONAL ENGINEERING RESPONSIBILITY SOLELY FOR THE TRUSS COMPONENT DESIGN SHOWN. THE SUITABILITY AND USE OF THIS COMPONENT FOR ANY BUILDING IS THE RESPONSIBILITY OF THE

ARTHUR R. FISHER
LICENSE
No. 59687
STATE OF FLORIDA
PROFESSIONAL ENGINEER

TC LL	20.0 PSF	REF R487-- 33390
TC DL	10.0 PSF	DATE 09/02/05
BC DL	10.0 PSF	DRW HCUSR487 05245166
BC LL	0.0 PSF	HC-ENG GDL/AF *
TOT.LD.	40.0 PSF	SEQN- 28829
DUR.FAC.	1.25	

(5-352 JONATHON PERRY / LOT 10 PHASE II STONEHANGE - H19A)

Top chord 2x4 SP #2 Dense
Bot chord 2x4 SP #2 Dense
Webs 2x4 SP #3

Deflection meets L/360 live and L/240 total load.

110 mph wind, 11.10 ft mean hgt, ASCE 7-98, CLOSED bldg, not located within 4.50 ft from roof edge, CAT II, EXP B, wind TC DL=5.0 psf, wind BC DL=5.0 psf.

Right end vertical not exposed to wind pressure.

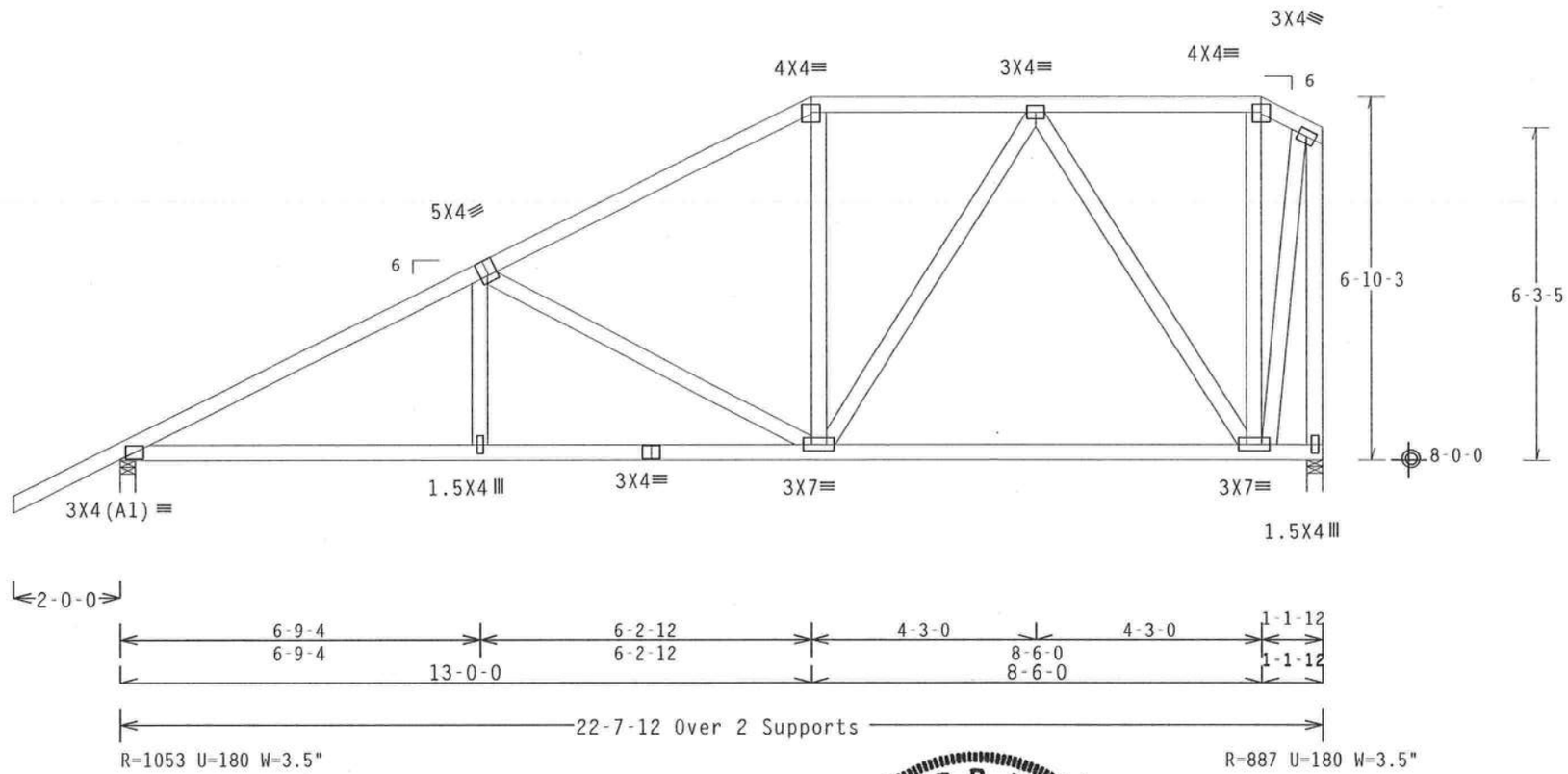

PLT TYP. Wave TPI | Design Crit: TPI-1995(STD)/FBC | 7.04.0805.1 | QTY:1 | FL/-/3/-/-/R/- | Scale =.3125"/Ft.

ALPINE
Alpine Engineered Products, Inc.
1950 Marley Drive
Haines City, FL 33844

WARNING TRUSSES REQUIRE EXTREME CARE IN FABRICATION, HANDLING, SHIPPING, INSTALLING AND BRACING. REFER TO BCSI 1-03 (BUILDING COMPONENT SAFETY INFORMATION), PUBLISHED BY TPI (TRUSS PLATE INSTITUTE, 583 D'ONOFRIO DR., SUITE 200, MADISON, WI 53719) AND WTCA (WOOD TRUSS COUNCIL OF AMERICA, 6300 ENTERPRISE LN, MADISON, WI 53719) FOR SAFETY PRACTICES PRIOR TO PERFORMING THESE FUNCTIONS. UNLESS OTHERWISE INDICATED, TOP CHORD SHALL HAVE PROPERLY ATTACHED STRUCTURAL PANELS AND BOTTOM CHORD SHALL HAVE A PROPERLY ATTACHED RIGID CEILING.

IMPORTANTFURNISH A COPY OF THIS DESIGN TO THE INSTALLATION CONTRACTOR. ALPINE ENGINEERED PRODUCTS, INC. SHALL NOT BE RESPONSIBLE FOR ANY DEVIATION FROM THIS DESIGN; ANY FAILURE TO BUILD THE TRUSS IN CONFORMANCE WITH TPI; OR FABRICATING, HANDLING, SHIPPING, INSTALLING & BRACING OF TRUSSES. DESIGN CONFORMS WITH APPLICABLE PROVISIONS OF NDS (NATIONAL DESIGN SPEC, BY AF&PA) AND TPI. ALPINE CONNECTOR PLATES ARE MADE OF 20/18/16GA (W,H/S/K) ASTM A653 GRADE 40/60 (W, K/H,S) GALV. STEEL. APPLY PLATES TO EACH FACE OF TRUSS AND, UNLESS OTHERWISE LOCATED ON THIS DESIGN, POSITION PER DRAWINGS 160A-Z. ANY INSPECTION OF PLATES FOLLOWED BY (1) SHALL BE PER ANNEX A3 OF TPI1-2002 SEC.3. A SEAL ON THIS DRAWING INDICATES ACCEPTANCE OF PROFESSIONAL ENGINEERING RESPONSIBILITY SOLELY FOR THE TRUSS COMPONENT DESIGN SHOWN. THE SUITABILITY AND USE OF THIS COMPONENT FOR ANY BUILDING IS THE RESPONSIBILITY OF THE BUILDING DESIGNER PER ANSI/TPI 1 SEC. 2.

ARTHUR R. FISHER
LICENSE
No. 59687
STATE OF FLORIDA
PROFESSIONAL ENGINEER

TC LL	20.0 PSF	REF	R487-- 33391
TC DL	10.0 PSF	DATE	09/02/05
BC DL	10.0 PSF	DRW	HCUSR487 05245167
BC LL	0.0 PSF	HC-ENG	GDL/AF *
TOT.LD.	40.0 PSF	SEQN-	28834
DUR.FAC.	1.25		

(5-392-JONATHON PERRY / LOT 18 PHASE II STONEHANGE - AT1)

Top chord 2x4 SP #2 Dense
Bot chord 2x4 SP #2 Dense
Webs 2x4 SP #3

Left end vertical not exposed to wind pressure.

Deflection meets L/360 live and L/240 total load.

110 mph wind, 12.16 ft mean hgt, ASCE 7-98, CLOSED bldg, not located within 4.50 ft from roof edge, CAT II, EXP B, wind TC DL=5.0 psf, wind BC DL=5.0 psf.

(A) Continuous lateral bracing equally spaced on member.

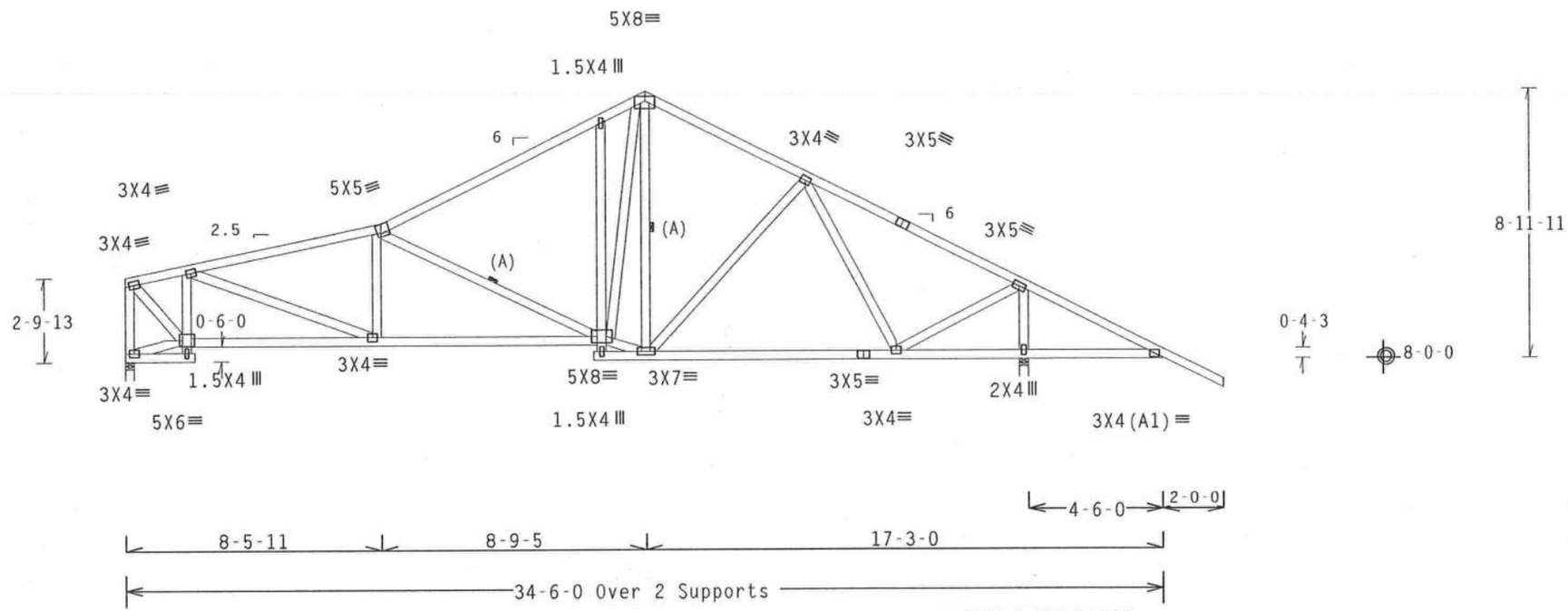

PLT TYP. Wave TPI | Design Crit: TPI-1995(STD)/FBC | 7.04.[illegible]805.16 | QTY 4 | FL/-/3/-/-/R/- | Scale =.1875"/Ft.

ALPINE
Alpine Engineered Products, Inc.
1950 Marley Drive

WARNING TRUSSES REQUIRE EXTREME CARE IN FABRICATION, HANDLING, SHIPPING, INSTALLING AND BRACING. REFER TO BCSI 1-03 (BUILDING COMPONENT SAFETY INFORMATION), PUBLISHED BY TPI (TRUSS PLATE INSTITUTE, 583 D'ONOFRIO DR., SUITE 200, MADISON, WI 53719) AND WTCA (WOOD TRUSS COUNCIL OF AMERICA, 6300 ENTERPRISE LN, MADISON, WI 53719) FOR SAFETY PRACTICES PRIOR TO PERFORMING THESE FUNCTIONS. UNLESS OTHERWISE INDICATED, TOP CHORD SHALL HAVE PROPERLY ATTACHED STRUCTURAL PANELS AND BOTTOM CHORD SHALL HAVE A PROPERLY ATTACHED RIGID CEILING.

IMPORTANT FURNISH A COPY OF THIS DESIGN TO THE INSTALLATION CONTRACTOR. ALPINE ENGINEERED PRODUCTS, INC. SHALL NOT BE RESPONSIBLE FOR ANY DEVIATION FROM THIS DESIGN; ANY FAILURE TO BUILD THE TRUSS IN CONFORMANCE WITH TPI; OR FABRICATING, HANDLING, SHIPPING, INSTALLING & BRACING OF TRUSSES. DESIGN CONFORMS WITH APPLICABLE PROVISIONS OF NDS (NATIONAL DESIGN SPEC. BY AF&PA) AND TPI. ALPINE CONNECTOR PLATES ARE MADE OF 20/18/16GA (W,H/S/K) ASTM A653 GRADE 40/60 (W, K/H,S) GALV. STEEL. APPLY PLATES TO EACH FACE OF TRUSS AND, UNLESS OTHERWISE LOCATED ON THIS DESIGN, POSITION PER DRAWINGS 160A-Z. ANY INSPECTION OF PLATES FOLLOWED BY (1) SHALL BE PER ANNEX A3 OF TPI1-2002 SEC.3. A SEAL ON THIS DRAWING INDICATES ACCEPTANCE OF PROFESSIONAL ENGINEERING RESPONSIBILITY SOLELY FOR THE TRUSS COMPONENT DESIGN SHOWN. THE SUITABILITY AND USE OF THIS COMPONENT FOR ANY BUILDING IS THE RESPONSIBILITY OF THE

ARTHUR R. FISHER
LICENSE
No. 59687
STATE OF FLORIDA
PROFESSIONAL ENGINEER

TC LL	20.0 PSF	REF R487-- 33392
TC DL	10.0 PSF	DATE 09/02/05
BC DL	10.0 PSF	DRW HCUSR487 05245143
BC LL	0.0 PSF	HC-ENG JB/AF *
TOT.LD.	40.0 PSF	SEQN- 27286
DUR.FAC.	1.25	

(5-392-JONATHON PERRY / LOT 18 PHASE II STONEHANGE - A7)

Top chord 2x4 SP #2 Dense
Bot chord 2x4 SP #2 Dense
Webs 2x4 SP #3

(A) Continuous lateral bracing equally spaced on member.

110 mph wind, 12.16 ft mean hgt, ASCE 7-98, CLOSED bldg, not located within 4.50 ft from roof edge, CAT II, EXP B, wind TC DL=5.0 psf, wind BC DL=5.0 psf.

Deflection meets L/360 live and L/240 total load.

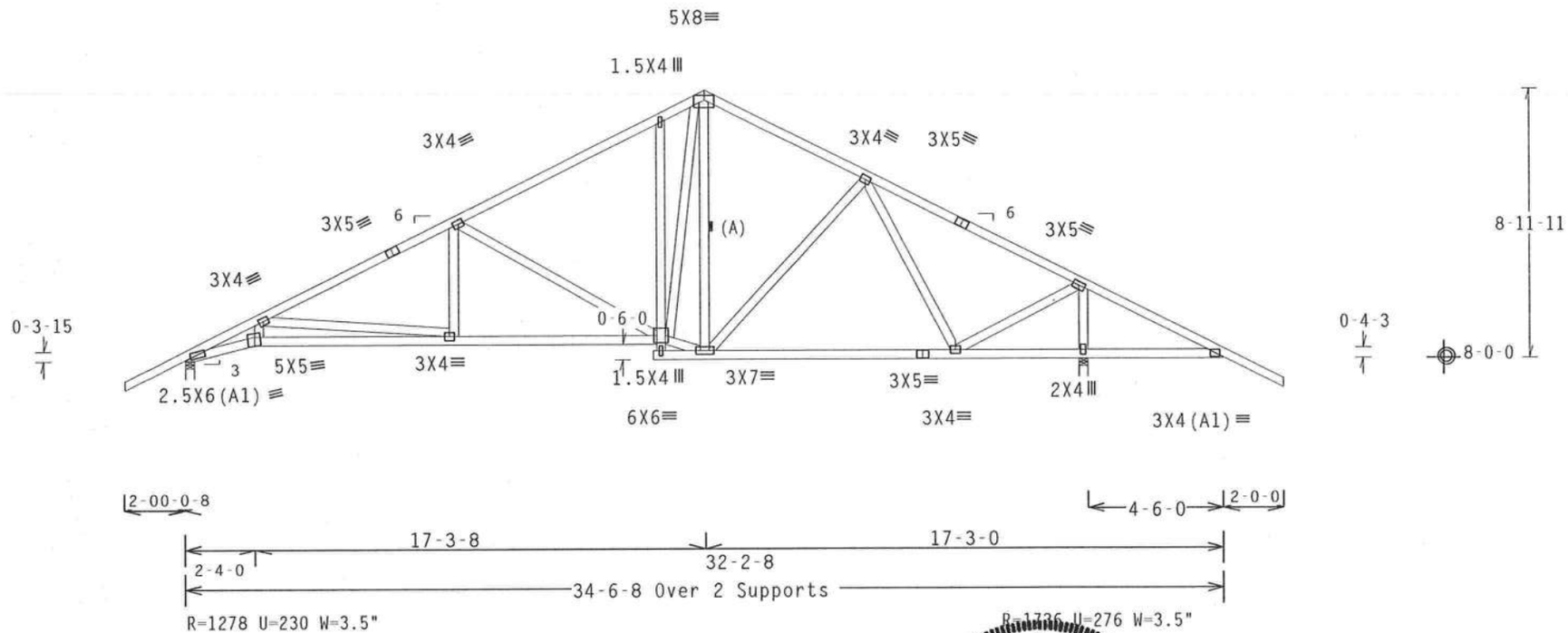

PLT TYP. Wave TPI | Design Crit: TPI-1995(STD)/FBC | 7.04.0805.16 | QTY:1 | FL/-/3/-/-/R/- | Scale =.1875"/Ft.

ALPINE
Alpine Engineered Products, Inc.
1950 Marley Drive

WARNING TRUSSES REQUIRE EXTREME CARE IN FABRICATION, HANDLING, SHIPPING, INSTALLING AND BRACING. REFER TO BCSI 1-03 (BUILDING COMPONENT SAFETY INFORMATION), PUBLISHED BY TPI (TRUSS PLATE INSTITUTE, 583 D'ONOFRIO DR., SUITE 200, MADISON, WI 53719) AND WTCA (WOOD TRUSS COUNCIL OF AMERICA, 6300 ENTERPRISE LN, MADISON, WI 53719) FOR SAFETY PRACTICES PRIOR TO PERFORMING THESE FUNCTIONS. UNLESS OTHERWISE INDICATED, TOP CHORD SHALL HAVE PROPERLY ATTACHED STRUCTURAL PANELS AND BOTTOM CHORD SHALL HAVE A PROPERLY ATTACHED RIGID CEILING.

IMPORTANT FURNISH A COPY OF THIS DESIGN TO THE INSTALLATION CONTRACTOR. ALPINE ENGINEERED PRODUCTS, INC. SHALL NOT BE RESPONSIBLE FOR ANY DEVIATION FROM THIS DESIGN; ANY FAILURE TO BUILD THE TRUSS IN CONFORMANCE WITH TPI; OR FABRICATING, HANDLING, SHIPPING, INSTALLING & BRACING OF TRUSSES. DESIGN CONFORMS WITH APPLICABLE PROVISIONS OF NDS (NATIONAL DESIGN SPEC. BY AF&PA) AND TPI. ALPINE CONNECTOR PLATES ARE MADE OF 20/18/16GA (W.H/S/K) ASTM A653 GRADE 40/60 (W. K/H.S) GALV. STEEL. APPLY PLATES TO EACH FACE OF TRUSS AND, UNLESS OTHERWISE LOCATED ON THIS DESIGN, POSITION PER DRAWINGS 160A-Z. ANY INSPECTION OF PLATES FOLLOWED BY (1) SHALL BE PER ANNEX A3 OF TPI1-2002 SEC.3. A SEAL ON THIS DRAWING INDICATES ACCEPTANCE OF PROFESSIONAL ENGINEERING RESPONSIBILITY SOLELY FOR THE TRUSS COMPONENT DESIGN SHOWN. THE SUITABILITY AND USE OF THIS COMPONENT FOR ANY BUILDING IS THE RESPONSIBILITY OF THE

ARTHUR R. FISHER
LICENSE
No. 59687
STATE OF FLORIDA
PROFESSIONAL ENGINEER

TC LL	20.0 PSF	REF R487-- 33393
TC DL	10.0 PSF	DATE 09/02/05
BC DL	10.0 PSF	DRW HCUSR487 05245142
BC LL	0.0 PSF	HC-ENG JB/AF *
TOT.LD.	40.0 PSF	SEQN- 27285
DUR.FAC.	1.25	

(5-392-JONATHON PERRY / LOT 18 PHASE II STONEHANGE - BGE)

Top chord 2x4 SP #2 Dense
Bot chord 2x4 SP #2 Dense
Webs 2x4 SP #3

SPECIAL LOADS
------(LUMBER DUR.FAC.=1.25 / PLATE DUR.FAC.=1.25)

TC - From	82 PLF	at -2.00 to	82 PLF	at 25.00
BC - From	4 PLF	at -2.00 to	4 PLF	at 0.00
BC - From	20 PLF	at 0.00 to	20 PLF	at 23.00
BC - From	4 PLF	at 23.00 to	4 PLF	at 25.00

(**) Plate relocated as shown.

110 mph wind, 10.56 ft mean hgt, ASCE 7-98, CLOSED bldg, Located anywhere in roof, CAT II, EXP B, wind TC DL=5.0 psf, wind BC DL=5.0 psf.

See DWGS A11015EC1103 & GBLLETIN0405 for more requirements.

Deflection meets L/360 live and L/240 total load.

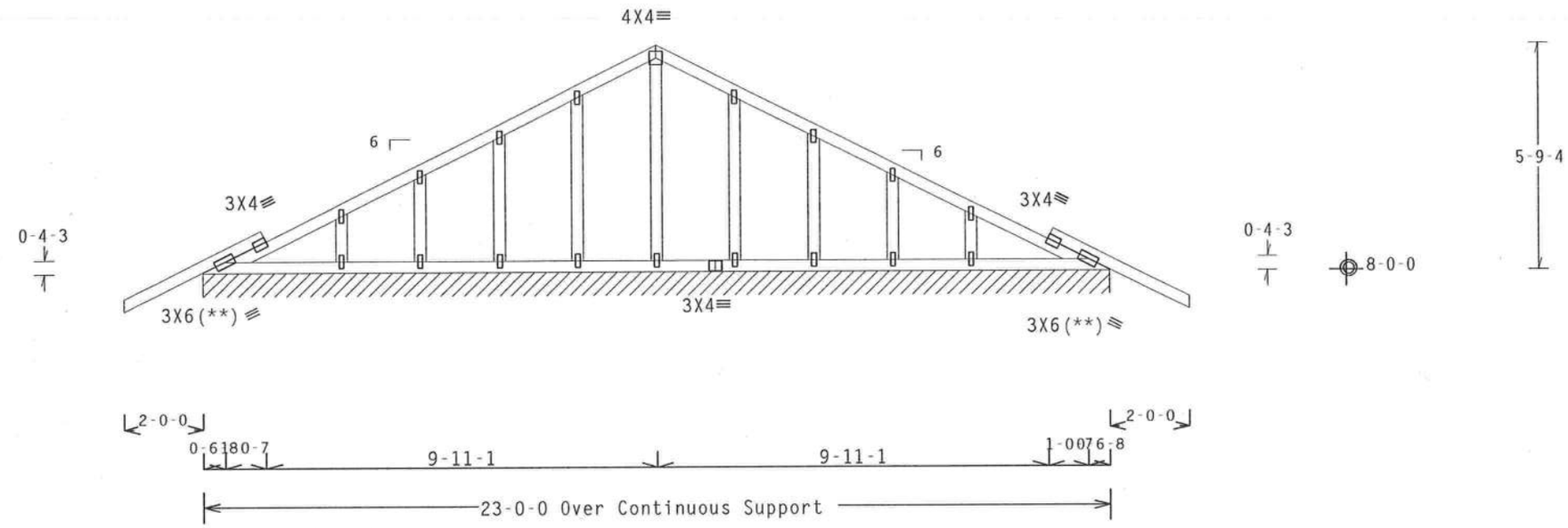

Note: All Plates Are 1.5X4 Except As Shown.

PLT TYP. Wave TPI Design Crit: TPI-1995(STD)/FBC 7.04.6809.16 QTY 1 FL/-/3/-/-/R/- Scale =.25"/Ft.

ALPINE
Alpine Engineered Products, Inc.
1950 Marley Drive

WARNING TRUSSES REQUIRE EXTREME CARE IN FABRICATION, HANDLING, SHIPPING, INSTALLING AND BRACING. REFER TO BCSI 1-03 (BUILDING COMPONENT SAFETY INFORMATION), PUBLISHED BY TPI (TRUSS PLATE INSTITUTE, 583 D'ONOFRIO DR., SUITE 200, MADISON, WI 53719) AND WTCA (WOOD TRUSS COUNCIL OF AMERICA, 6300 ENTERPRISE LN, MADISON, WI 53719) FOR SAFETY PRACTICES PRIOR TO PERFORMING THESE FUNCTIONS. UNLESS OTHERWISE INDICATED, TOP CHORD SHALL HAVE PROPERLY ATTACHED STRUCTURAL PANELS AND BOTTOM CHORD SHALL HAVE A PROPERLY ATTACHED RIGID CEILING.

IMPORTANTFURNISH A COPY OF THIS DESIGN TO THE INSTALLATION CONTRACTOR. ALPINE ENGINEERED PRODUCTS, INC. SHALL NOT BE RESPONSIBLE FOR ANY DEVIATION FROM THIS DESIGN; ANY FAILURE TO BUILD THE TRUSS IN CONFORMANCE WITH TPI; OR FABRICATING, HANDLING, SHIPPING, INSTALLING & BRACING OF TRUSSES. DESIGN CONFORMS WITH APPLICABLE PROVISIONS OF NDS (NATIONAL DESIGN SPEC. BY AF&PA) AND TPI. ALPINE CONNECTOR PLATES ARE MADE OF 20/18/16GA (W.H/S/K) ASTM A653 GRADE 40/60 (W. K/H.S) GALV. STEEL. APPLY PLATES TO EACH FACE OF TRUSS AND, UNLESS OTHERWISE LOCATED ON THIS DESIGN, POSITION PER DRAWINGS 160A-Z. ANY INSPECTION OF PLATES FOLLOWED BY (1) SHALL BE PER ANNEX A3 OF TPI1-2002 SEC.3. A SEAL ON THIS DRAWING INDICATES ACCEPTANCE OF PROFESSIONAL ENGINEERING RESPONSIBILITY SOLELY FOR THE TRUSS COMPONENT DESIGN SHOWN. THE SUITABILITY AND USE OF THIS COMPONENT FOR ANY BUILDING IS THE RESPONSIBILITY OF THE

ARTHUR R. FISHER
LICENSE
No. 59687
STATE OF FLORIDA
PROFESSIONAL ENGINEER

TC LL	20.0 PSF	REF R487-- 33394
TC DL	10.0 PSF	DATE 09/02/05
BC DL	10.0 PSF	DRW HCUSR487 05245126
BC LL	0.0 PSF	HC-ENG JB/AF
TOT.LD.	40.0 PSF	SEQN- 27319
DUR.FAC.	1.25	

(5-392-JONATHON PERRY / LOT 18 PHASE II STONEHANGE - B1)

THIS DWG PREPARED FROM COMPUTER INPUT LOADS & DIMENSIONS SUBMITTED BY TRUSS MFR

Top chord 2x4 SP #2 Dense
Bot chord 2x4 SP #2 Dense
Webs 2x4 SP #3

Left end vertical not exposed to wind pressure.

110 mph wind, 10.72 ft mean hgt, ASCE 7-98, CLOSED bldg, not located within 4.50 ft from roof edge, CAT II, EXP B, wind TC DL=5.0 psf, wind BC DL=5.0 psf.

Deflection meets L/360 live and L/240 total load.

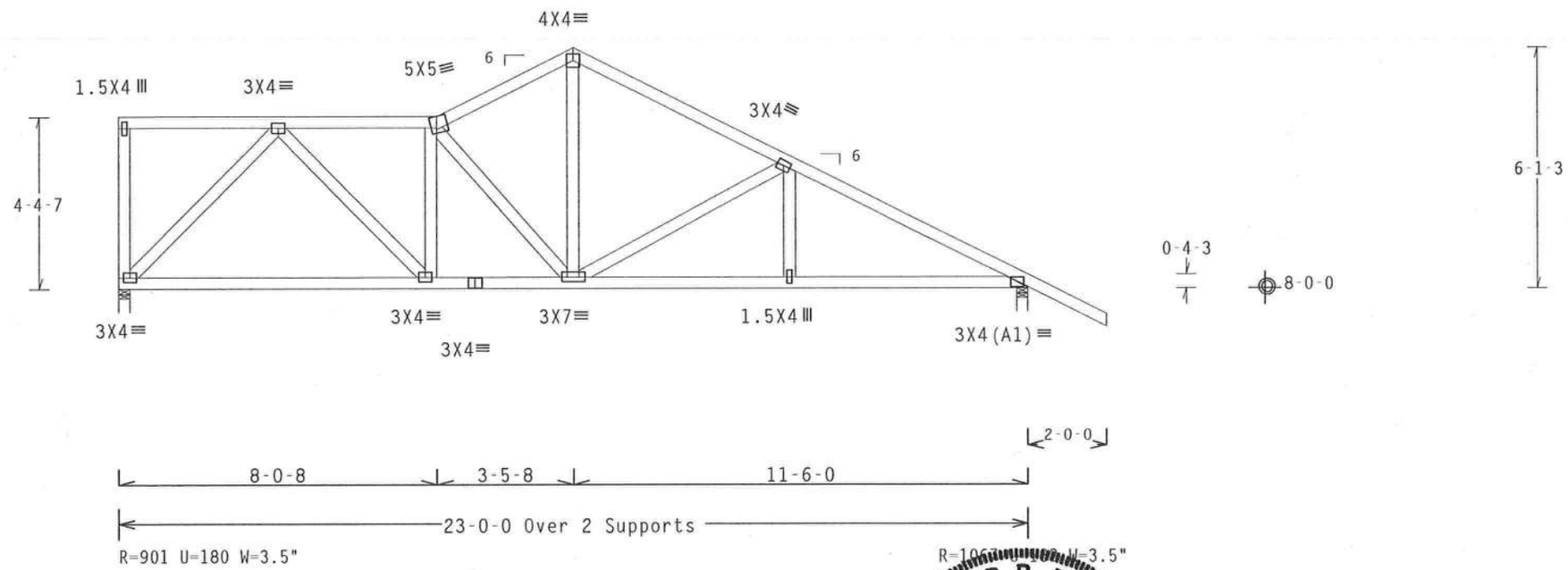

PLT TYP. Wave TPI | Design Crit: TPI-1995(STD)/FBC | 7.04.[illegible]805.1[illegible] | QTY 1 | FL/-/3/-/-/R/- | Scale =.25"/Ft.

ALPINE
Alpine Engineered Products, Inc.
1950 Marley Drive
Haines City, FL 33844

WARNING TRUSSES REQUIRE EXTREME CARE IN FABRICATION, HANDLING, SHIPPING, INSTALLING AND BRACING. REFER TO BCSI 1-03 (BUILDING COMPONENT SAFETY INFORMATION), PUBLISHED BY TPI (TRUSS PLATE INSTITUTE, 583 D'ONOFRIO DR., SUITE 200, MADISON, WI 53719) AND WTCA (WOOD TRUSS COUNCIL OF AMERICA, 6300 ENTERPRISE LN, MADISON, WI 53719) FOR SAFETY PRACTICES PRIOR TO PERFORMING THESE FUNCTIONS. UNLESS OTHERWISE INDICATED, TOP CHORD SHALL HAVE PROPERLY ATTACHED STRUCTURAL PANELS AND BOTTOM CHORD SHALL HAVE A PROPERLY ATTACHED RIGID CEILING.

IMPORTANTFURNISH A COPY OF THIS DESIGN TO THE INSTALLATION CONTRACTOR. ALPINE ENGINEERED PRODUCTS, INC. SHALL NOT BE RESPONSIBLE FOR ANY DEVIATION FROM THIS DESIGN; ANY FAILURE TO BUILD THE TRUSS IN CONFORMANCE WITH TPI; OR FABRICATING, HANDLING, SHIPPING, INSTALLING & BRACING OF TRUSSES. DESIGN CONFORMS WITH APPLICABLE PROVISIONS OF NDS (NATIONAL DESIGN SPEC. BY AF&PA) AND TPI. ALPINE CONNECTOR PLATES ARE MADE OF 20/18/16GA (W,H/S/K) ASTM A653 GRADE 40/60 (W, K/H,S) GALV. STEEL. APPLY PLATES TO EACH FACE OF TRUSS AND, UNLESS OTHERWISE LOCATED ON THIS DESIGN, POSITION PER DRAWINGS 160A-Z. ANY INSPECTION OF PLATES FOLLOWED BY (1) SHALL BE PER ANNEX A3 OF TPI1-2002 SEC.3. A SEAL ON THIS DRAWING INDICATES ACCEPTANCE OF PROFESSIONAL ENGINEERING RESPONSIBILITY SOLELY FOR THE TRUSS COMPONENT DESIGN SHOWN. THE SUITABILITY AND USE OF THIS COMPONENT FOR ANY BUILDING IS THE RESPONSIBILITY OF THE BUILDING DESIGNER PER ANSI/TPI 1 SEC. 2.

ARTHUR R. FISHER
LICENSE
No. 59687
STATE OF
FLORIDA
PROFESSIONAL ENGINEER

TC LL	20.0 PSF	REF R487-- 33395
TC DL	10.0 PSF	DATE 09/02/05
BC DL	10.0 PSF	DRW HCUSR487 05245158
BC LL	0.0 PSF	HC-ENG JB/AF *
TOT.LD.	40.0 PSF	SEQN- 27302
DUR.FAC.	1.25	
SPACING	24.0"	JREF 1S05487 704

(5-392-JONATHON PERRY / LOT 18 PHASE II STONEHANGE - B3)

THIS DWG PREPARED FROM COMPUTER INPUT LOADS & DIMENSIONS SUBMITTED BY TRUSS MFR

Top chord 2x4 SP #2 Dense
Bot chord 2x4 SP #2 Dense
Webs 2x4 SP #3

Left end vertical not exposed to wind pressure.

110 mph wind, 10.86 ft mean hgt, ASCE 7-98, CLOSED bldg, not located within 4.50 ft from roof edge, CAT II, EXP B, wind TC DL=5.0 psf, wind BC DL=5.0 psf.

Deflection meets L/360 live and L/240 total load.

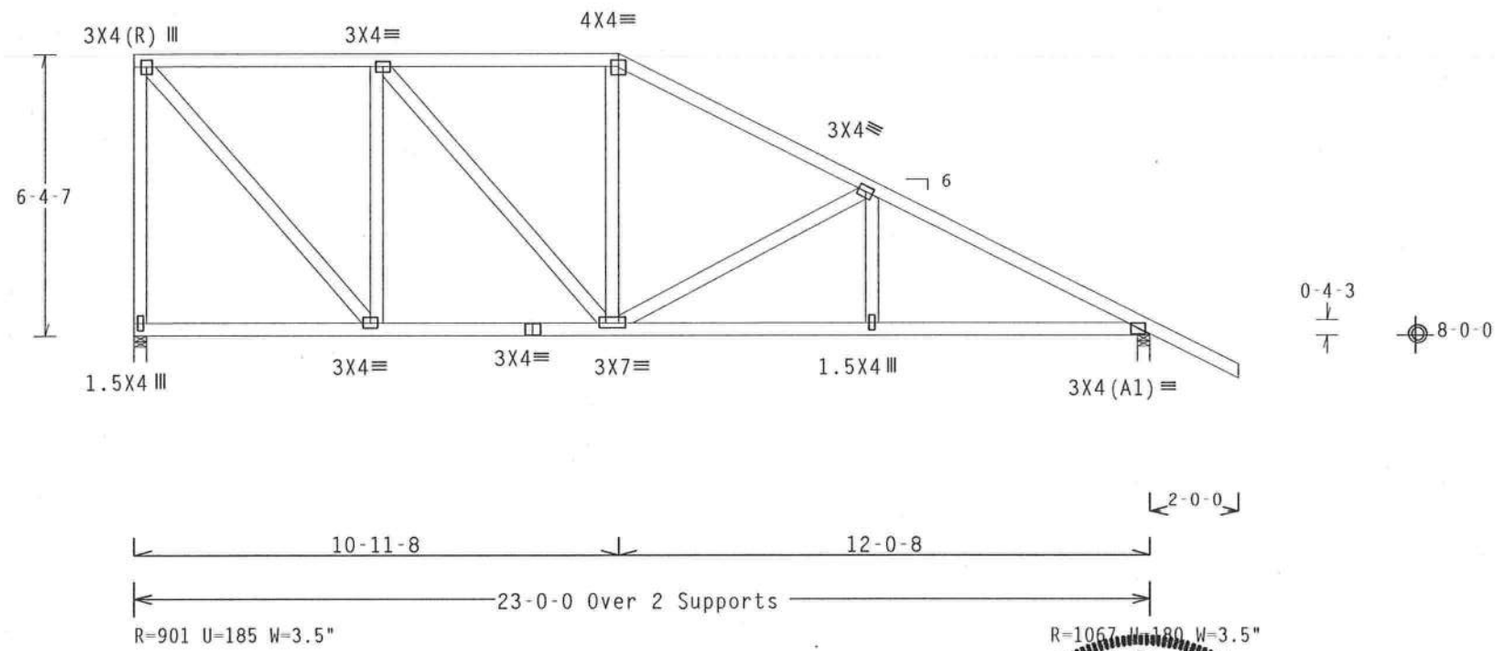

PLT TYP. Wave TPI | Design Crit: TPI-1995(STD)/FBC | 7.04 / 805.16 | QTY 1 | FL/-/3/-/-/R/- | Scale =.25"/Ft.

ALPINE
Alpine Engineered Products, Inc.
1950 Marley Drive
Haines City, FL 33844

WARNING TRUSSES REQUIRE EXTREME CARE IN FABRICATION, HANDLING, SHIPPING, INSTALLING AND BRACING. REFER TO BCSI 1-03 (BUILDING COMPONENT SAFETY INFORMATION), PUBLISHED BY TPI (TRUSS PLATE INSTITUTE, 583 D'ONOFRIO DR., SUITE 200, MADISON, WI 53719) AND WTCA (WOOD TRUSS COUNCIL OF AMERICA, 6300 ENTERPRISE LN, MADISON, WI 53719) FOR SAFETY PRACTICES PRIOR TO PERFORMING THESE FUNCTIONS. UNLESS OTHERWISE INDICATED, TOP CHORD SHALL HAVE PROPERLY ATTACHED STRUCTURAL PANELS AND BOTTOM CHORD SHALL HAVE A PROPERLY ATTACHED RIGID CEILING.

IMPORTANT FURNISH A COPY OF THIS DESIGN TO THE INSTALLATION CONTRACTOR. ALPINE ENGINEERED PRODUCTS, INC. SHALL NOT BE RESPONSIBLE FOR ANY DEVIATION FROM THIS DESIGN; ANY FAILURE TO BUILD THE TRUSS IN CONFORMANCE WITH TPI; OR FABRICATING, HANDLING, SHIPPING, INSTALLING & BRACING OF TRUSSES. DESIGN CONFORMS WITH APPLICABLE PROVISIONS OF NDS (NATIONAL DESIGN SPEC, BY AF&PA) AND TPI. ALPINE CONNECTOR PLATES ARE MADE OF 20/18/16GA (W,H/S/K) ASTM A653 GRADE 40/60 (W, K/H,S) GALV. STEEL. APPLY PLATES TO EACH FACE OF TRUSS AND, UNLESS OTHERWISE LOCATED ON THIS DESIGN, POSITION PER DRAWINGS 160A-Z. ANY INSPECTION OF PLATES FOLLOWED BY (1) SHALL BE PER ANNEX A3 OF TPI1-2002 SEC.3. A SEAL ON THIS DRAWING INDICATES ACCEPTANCE OF PROFESSIONAL ENGINEERING RESPONSIBILITY SOLELY FOR THE TRUSS COMPONENT DESIGN SHOWN. THE SUITABILITY AND USE OF THIS COMPONENT FOR ANY BUILDING IS THE RESPONSIBILITY OF THE BUILDING DESIGNER PER ANSI/TPI 1 SEC. 2.

ARTHUR R. FISHER LICENSE No. 59687 STATE OF FLORIDA PROFESSIONAL ENGINEER

TC LL	20.0 PSF	REF	R487-- 33396
TC DL	10.0 PSF	DATE	09/02/05
BC DL	10.0 PSF	DRW	HCUSR487 05245157
BC LL	0.0 PSF	HC-ENG	JB/AF *
TOT.LD.	40.0 PSF	SEQN-	27301
DUR.FAC.	1.25		
SPACING	24.0"	JREF	1S05487.704

(5-392-JONATHON PERRY / LOT 18 PHASE 11 STONEHANGE - B4)

Top chord 2x4 SP #2 Dense
Bot chord 2x4 SP #2 Dense
Webs 2x4 SP #3

Left end vertical not exposed to wind pressure.

Deflection meets L/360 live and L/240 total load.

110 mph wind, 11.32 ft mean hgt, ASCE 7-98, CLOSED bldg, not located within 4.50 ft from roof edge, CAT II, EXP B, wind TC DL=5.0 psf, wind BC DL=5.0 psf.

(A) Continuous lateral bracing equally spaced on member.

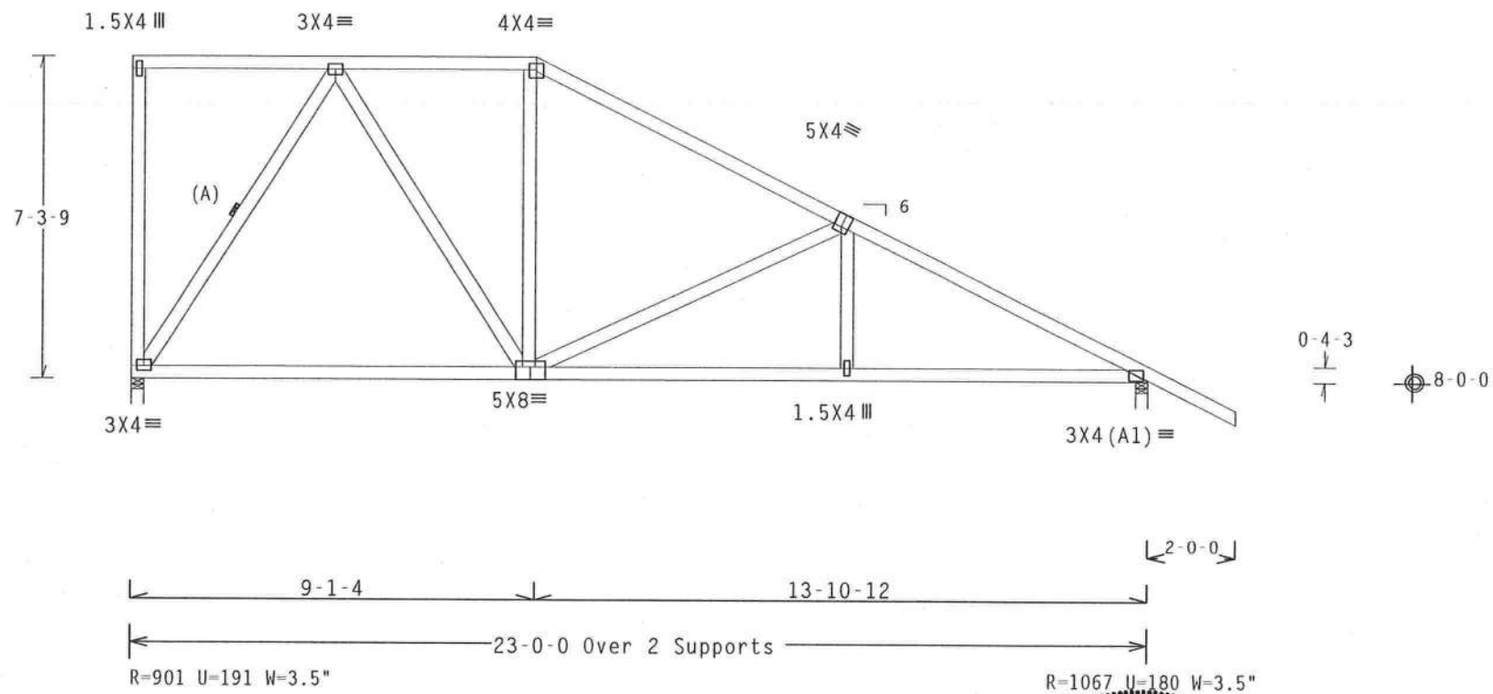

PLT TYP. Wave TPI Design Crit: TPI-1995(STD)/FBC 7.04.0806.16 QTY:1 FL/-/3/-/-/R/- Scale =.25"/Ft.

ALPINE
Alpine Engineered Products, Inc.
1950 Marley Drive
Haines City, FL 33844

WARNING TRUSSES REQUIRE EXTREME CARE IN FABRICATION, HANDLING, SHIPPING, INSTALLING AND BRACING. REFER TO BCSI 1-03 (BUILDING COMPONENT SAFETY INFORMATION), PUBLISHED BY TPI (TRUSS PLATE INSTITUTE, 583 D'ONOFRIO DR., SUITE 200, MADISON, WI 53719) AND WTCA (WOOD TRUSS COUNCIL OF AMERICA, 6300 ENTERPRISE LN, MADISON, WI 53719) FOR SAFETY PRACTICES PRIOR TO PERFORMING THESE FUNCTIONS. UNLESS OTHERWISE INDICATED, TOP CHORD SHALL HAVE PROPERLY ATTACHED STRUCTURAL PANELS AND BOTTOM CHORD SHALL HAVE A PROPERLY ATTACHED RIGID CEILING.

IMPORTANT FURNISH A COPY OF THIS DESIGN TO THE INSTALLATION CONTRACTOR. ALPINE ENGINEERED PRODUCTS, INC. SHALL NOT BE RESPONSIBLE FOR ANY DEVIATION FROM THIS DESIGN; ANY FAILURE TO BUILD THE TRUSS IN CONFORMANCE WITH TPI; OR FABRICATING, HANDLING, SHIPPING, INSTALLING & BRACING OF TRUSSES. DESIGN CONFORMS WITH APPLICABLE PROVISIONS OF NDS (NATIONAL DESIGN SPEC. BY AF&PA) AND TPI. ALPINE CONNECTOR PLATES ARE MADE OF 20/18/16GA (W,H/S/K) ASTM A653 GRADE 40/60 (W, K/H,S) GALV. STEEL. APPLY PLATES TO EACH FACE OF TRUSS AND, UNLESS OTHERWISE LOCATED ON THIS DESIGN, POSITION PER DRAWINGS 160A-Z. ANY INSPECTION OF PLATES FOLLOWED BY (1) SHALL BE PER ANNEX A3 OF TPI1-2002 SEC.3. A SEAL ON THIS DRAWING INDICATES ACCEPTANCE OF PROFESSIONAL ENGINEERING RESPONSIBILITY SOLELY FOR THE TRUSS COMPONENT DESIGN SHOWN. THE SUITABILITY AND USE OF THIS COMPONENT FOR ANY BUILDING IS THE RESPONSIBILITY OF THE BUILDING DESIGNER PER ANSI/TPI 1 SEC. 2.

ARTHUR R. FISHER
LICENSE
No. 59687
STATE OF FLORIDA
PROFESSIONAL ENGINEER

TC LL	20.0 PSF	REF R487-- 33397
TC DL	10.0 PSF	DATE 09/02/05
BC DL	10.0 PSF	DRW HCUSR487 05245162
BC LL	0.0 PSF	HC-ENG JB/AF *
TOT.LD.	40.0 PSF	SEQN- 27266
DUR.FAC.	1.25	
SPACING	24.0"	JOB# 1605407-704

(5-392-JONATHON PERRY / LOT 18 PHASE II STONEHAVEN - B)

THIS DWG PREPARED FROM COMPUTER INPUT LOADS & DIMENSIONS SUBMITTED BY TRUSS M

Top chord 2x4 SP #2 Dense
Bot chord 2x4 SP #2 Dense
Webs 2x4 SP #3

Deflection meets L/360 live and L/240 total load.

110 mph wind, 10.72 ft mean hgt, ASCE 7-98, CLOSED bldg, Located anywhere in roof, CAT II, EXP B, wind TC DL=5.0 psf, wind BC DL=5.0 psf.

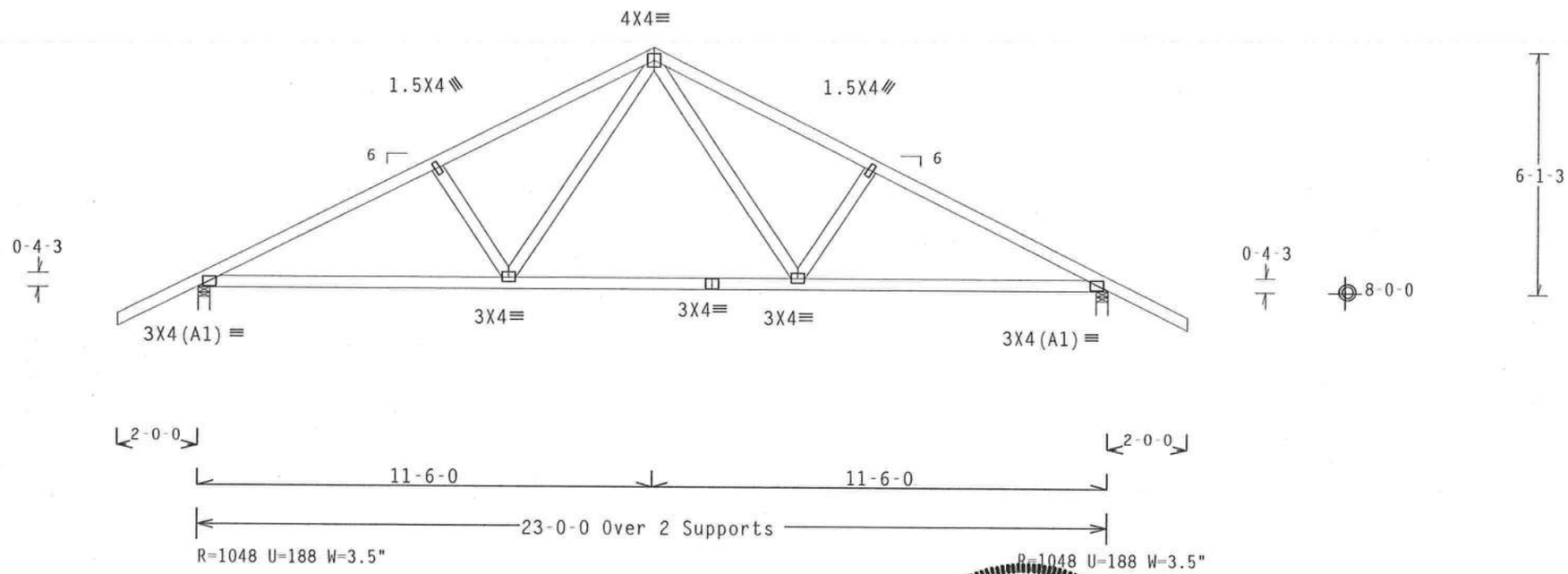

PLT TYP. Wave TPI | Design Crit: TPI-1995(STD)/FBC | 7.04.0805.16 | QTY: 3 | FL/-/3/-/-/R/- | Scale =.25"/Ft.

ALPINE
Alpine Engineered Products, Inc.
1950 Marley Drive
Haines City, FL 33844

WARNING TRUSSES REQUIRE EXTREME CARE IN FABRICATION, HANDLING, SHIPPING, INSTALLING AND BRACING. REFER TO BCSI 1-03 (BUILDING COMPONENT SAFETY INFORMATION), PUBLISHED BY TPI (TRUSS PLATE INSTITUTE, 583 D'ONOFRIO DR., SUITE 200, MADISON, WI 53719) AND WTCA (WOOD TRUSS COUNCIL OF AMERICA, 6300 ENTERPRISE LN, MADISON, WI 53719) FOR SAFETY PRACTICES PRIOR TO PERFORMING THESE FUNCTIONS. UNLESS OTHERWISE INDICATED, TOP CHORD SHALL HAVE PROPERLY ATTACHED STRUCTURAL PANELS AND BOTTOM CHORD SHALL HAVE A PROPERLY ATTACHED RIGID CEILING.

IMPORTANT FURNISH A COPY OF THIS DESIGN TO THE INSTALLATION CONTRACTOR. ALPINE ENGINEERED PRODUCTS, INC. SHALL NOT BE RESPONSIBLE FOR ANY DEVIATION FROM THIS DESIGN; ANY FAILURE TO BUILD THE TRUSS IN CONFORMANCE WITH TPI; OR FABRICATING, HANDLING, SHIPPING, INSTALLING & BRACING OF TRUSSES. DESIGN CONFORMS WITH APPLICABLE PROVISIONS OF NDS (NATIONAL DESIGN SPEC, BY AF&PA) AND TPI. ALPINE CONNECTOR PLATES ARE MADE OF 20/18/16GA (W,H/S/K) ASTM A653 GRADE 40/60 (W, K/H,S) GALV. STEEL. APPLY PLATES TO EACH FACE OF TRUSS AND, UNLESS OTHERWISE LOCATED ON THIS DESIGN, POSITION PER DRAWINGS 160A-Z. ANY INSPECTION OF PLATES FOLLOWED BY (I) SHALL BE PER ANNEX A3 OF TPI1-2002 SEC.3. A SEAL ON THIS DRAWING INDICATES ACCEPTANCE OF PROFESSIONAL ENGINEERING RESPONSIBILITY SOLELY FOR THE TRUSS COMPONENT DESIGN SHOWN. THE SUITABILITY AND USE OF THIS COMPONENT FOR ANY BUILDING IS THE RESPONSIBILITY OF THE BUILDING DESIGNER PER ANSI/TPI 1 SEC. 2.

09.02.05
ARTHUR R. FISHER
LICENSE
No. 59687
STATE OF FLORIDA
PROFESSIONAL ENGINEER

TC LL	20.0 PSF	REF R487-- 33398
TC DL	10.0 PSF	DATE 09/02/05
BC DL	10.0 PSF	DRW HCUSR487 05245144
BC LL	0.0 PSF	HC-ENG JB/AF
TOT.LD.	40.0 PSF	SEQN- 27260
DUR.FAC.	1.25	

([redacted] JON[redacted] PER[redacted] / LOT [redacted] PHASE [redacted] STONEH[redacted] - BS [redacted]) [redacted] THIS DWG [redacted] D FROM [redacted] UTER [redacted] LOADS [redacted] ENSION[redacted] MITTED [redacted] USS M[redacted]

Top chord 2x4 SP #2 Dense
Bot chord 2x4 SP #2 Dense
Webs 2x4 SP #3

Deflection meets L/360 live and L/240 total load.

110 mph wind, 10.72 ft mean hgt, ASCE 7-98, CLOSED bldg, not located within 4.50 ft from roof edge, CAT II, EXP B, wind TC DL=5.0 psf, wind BC DL=5.0 psf.

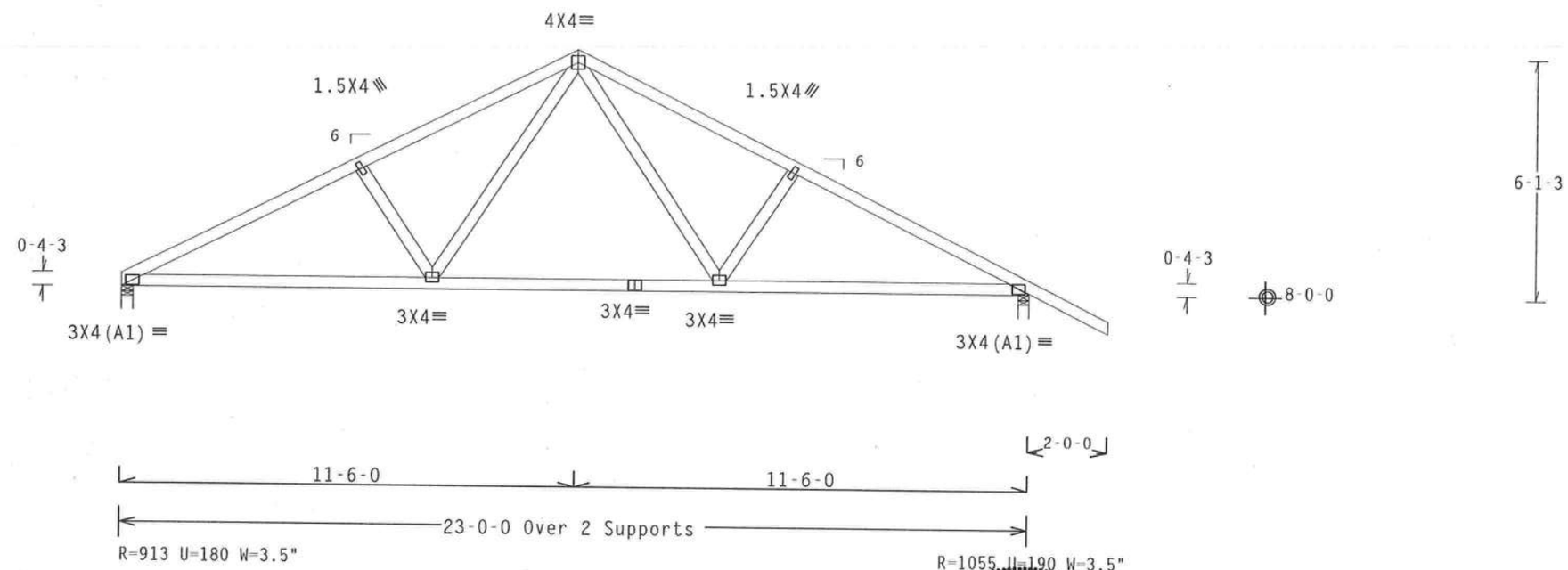

PLT TYP. Wave TPI Design Crit: TPI-1995(STD)/FBC 7.04.[redacted]16 QTY:5 FL/-/3/-/-/R/- Scale =.25"/Ft.

ALPINE
Alpine Engineered Products, Inc.
1950 Marley Drive
Haines City, FL 33844
FL Certificate of Authorization #[redacted]

WARNING TRUSSES REQUIRE EXTREME CARE IN FABRICATION, HANDLING, SHIPPING, INSTALLING AND BRACING. REFER TO BCSI 1-03 (BUILDING COMPONENT SAFETY INFORMATION), PUBLISHED BY TPI (TRUSS PLATE INSTITUTE, 583 D'ONOFRIO DR., SUITE 200, MADISON, WI 53719) AND WTCA (WOOD TRUSS COUNCIL OF AMERICA, 6300 ENTERPRISE LN, MADISON, WI 53719) FOR SAFETY PRACTICES PRIOR TO PERFORMING THESE FUNCTIONS. UNLESS OTHERWISE INDICATED, TOP CHORD SHALL HAVE PROPERLY ATTACHED STRUCTURAL PANELS AND BOTTOM CHORD SHALL HAVE A PROPERLY ATTACHED RIGID CEILING.

IMPORTANT FURNISH A COPY OF THIS DESIGN TO THE INSTALLATION CONTRACTOR. ALPINE ENGINEERED PRODUCTS, INC. SHALL NOT BE RESPONSIBLE FOR ANY DEVIATION FROM THIS DESIGN; ANY FAILURE TO BUILD THE TRUSS IN CONFORMANCE WITH TPI; OR FABRICATING, HANDLING, SHIPPING, INSTALLING & BRACING OF TRUSSES. DESIGN CONFORMS WITH APPLICABLE PROVISIONS OF NDS (NATIONAL DESIGN SPEC, BY AF&PA) AND TPI. ALPINE CONNECTOR PLATES ARE MADE OF 20/18/16GA (W,H/S/K) ASTM A653 GRADE 40/60 (W, K/H,S) GALV. STEEL. APPLY PLATES TO EACH FACE OF TRUSS AND, UNLESS OTHERWISE LOCATED ON THIS DESIGN, POSITION PER DRAWINGS 160A-Z. ANY INSPECTION OF PLATES FOLLOWED BY (1) SHALL BE PER ANNEX A3 OF TPI1-2002 SEC.3. A SEAL ON THIS DRAWING INDICATES ACCEPTANCE OF PROFESSIONAL ENGINEERING RESPONSIBILITY SOLELY FOR THE TRUSS COMPONENT DESIGN SHOWN. THE SUITABILITY AND USE OF THIS COMPONENT FOR ANY BUILDING IS THE RESPONSIBILITY OF THE BUILDING DESIGNER PER ANSI/TPI 1 SEC. 2.

ARTHUR R. FISHER
LICENSE
No. 59687
STATE OF FLORIDA
PROFESSIONAL ENGINEER

LL	20.0 PSF	REF R487-- 33399
DL	10.0 PSF	DATE 09/02/05
DL	10.0 PSF	DRW HCUSR487 05245160
BC LL	0.0 PSF	HC-ENG JB/AF *
TOT.LD.	40.0 PSF	SEQN- 27263
DUR.FAC.	1.25	

([redacted]-JON[redacted] PER[redacted] , LOT [redacted] PHASE [redacted] STONE[redacted] - B2) [redacted] DWG [redacted] ED FRO[redacted] UTER [redacted] LOADS [redacted] ENSION [redacted] MITTE[redacted] USS M[redacted]

Top chord 2x4 SP #2 Dense
Bot chord 2x4 SP #2 Dense
Webs 2x4 SP #3

Left end vertical not exposed to wind pressure.

110 mph wind, 10.72 ft mean hgt, ASCE 7-98, CLOSED bldg, not located within 4.50 ft from roof edge, CAT II, EXP B, wind TC DL=5.0 psf, wind BC DL=5.0 psf.

Deflection meets L/360 live and L/240 total load.

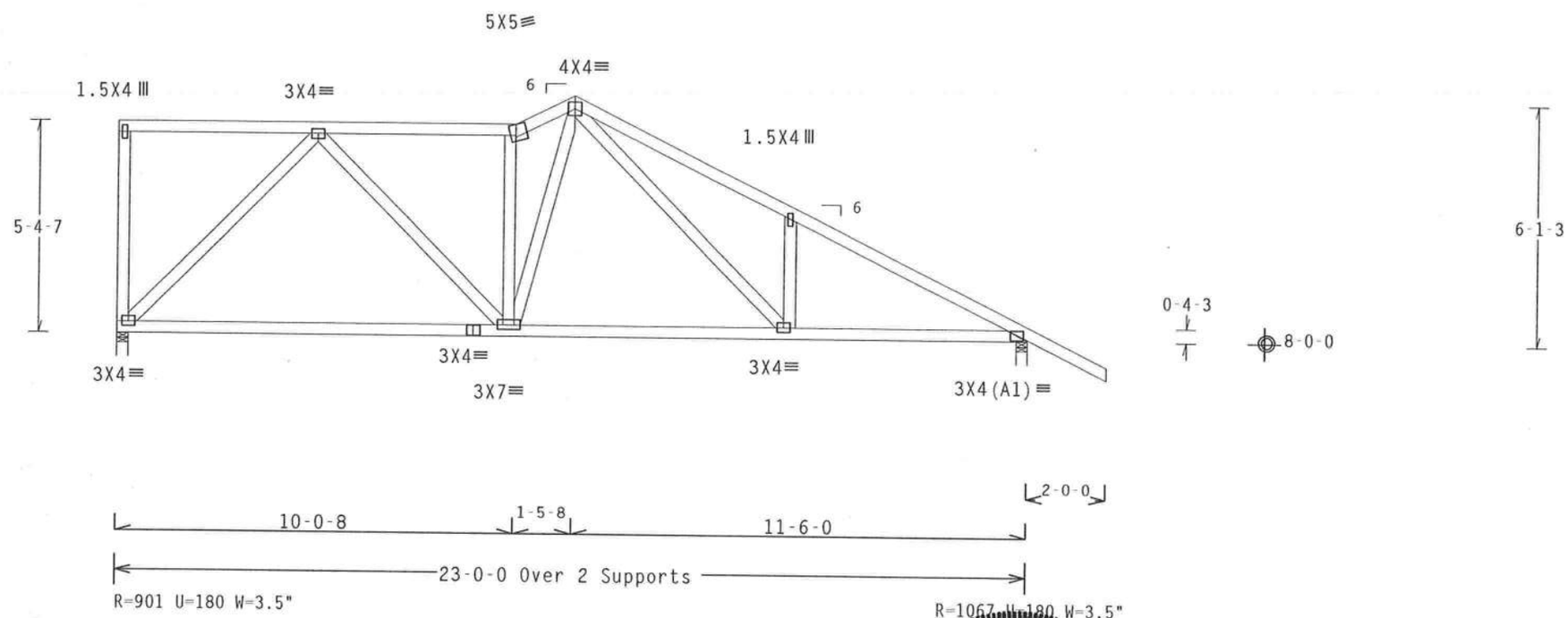

PLT TYP. Wave TPI

Design Crit: TPI-1995(STD)/FBC

7.04.[redacted]805.16 QTY:1

FL/-/3/-/-/R/-

Scale =.25"/Ft.

ALPINE

Alpine Engineered Products, Inc.
1950 Marley Drive
Haines City, FL 33844
FL Certificate of Authorization # 562

WARNING TRUSSES REQUIRE EXTREME CARE IN FABRICATION, HANDLING, SHIPPING, INSTALLING AND BRACING. REFER TO BCSI 1-03 (BUILDING COMPONENT SAFETY INFORMATION), PUBLISHED BY TPI (TRUSS PLATE INSTITUTE, 583 D'ONOFRIO DR., SUITE 200, MADISON, WI 53719) AND WTCA (WOOD TRUSS COUNCIL OF AMERICA, 6300 ENTERPRISE LN, MADISON, WI 53719) FOR SAFETY PRACTICES PRIOR TO PERFORMING THESE FUNCTIONS. UNLESS OTHERWISE INDICATED, TOP CHORD SHALL HAVE PROPERLY ATTACHED STRUCTURAL PANELS AND BOTTOM CHORD SHALL HAVE A PROPERLY ATTACHED RIGID CEILING.

IMPORTANT FURNISH A COPY OF THIS DESIGN TO THE INSTALLATION CONTRACTOR. ALPINE ENGINEERED PRODUCTS, INC. SHALL NOT BE RESPONSIBLE FOR ANY DEVIATION FROM THIS DESIGN; ANY FAILURE TO BUILD THE TRUSS IN CONFORMANCE WITH TPI; OR FABRICATING, HANDLING, SHIPPING, INSTALLING & BRACING OF TRUSSES. DESIGN CONFORMS WITH APPLICABLE PROVISIONS OF NDS (NATIONAL DESIGN SPEC. BY AF&PA) AND TPI. ALPINE CONNECTOR PLATES ARE MADE OF 20/19/16GA (W,H/S/K) ASTM A653 GRADE 40/60 (W, K/H,S) GALV. STEEL. APPLY PLATES TO EACH FACE OF TRUSS AND, UNLESS OTHERWISE LOCATED ON THIS DESIGN, POSITION PER DRAWINGS 160A-2. ANY INSPECTION OF PLATES FOLLOWED BY (1) SHALL BE PER ANNEX A1 OF TPI1-2002 SEC.3. A SEAL ON THIS DRAWING INDICATES ACCEPTANCE OF PROFESSIONAL ENGINEERING RESPONSIBILITY SOLELY FOR THE TRUSS COMPONENT DESIGN SHOWN. THE SUITABILITY AND USE OF THIS COMPONENT FOR ANY BUILDING IS THE RESPONSIBILITY OF THE BUILDING DESIGNER PER ANSI/TPI 1 SEC. 2.

ARTHUR R. FISHER
LICENSE
No.59687
STATE OF FLORIDA
PROFESSIONAL ENGINEER

C LL	20.0 PSF	REF R487-- 33400
C DL	10.0 PSF	DATE 09/02/05
C DL	10.0 PSF	DRW HCUSR487 05245159
BC LL	0.0 PSF	HC-ENG JB/AF *
TOT.LD.	40.0 PSF	SEQN- 27303
DUR.FAC.	1.25	

(5[redacted] JONA[redacted] PERR[redacted] LOT 1[redacted] PHASE 1[redacted] STONEHA[redacted] C) [redacted] THIS DWG [redacted]D FRO[redacted] COMPUTER [redacted] LOADS [redacted]ENSION [redacted]MITTE[redacted] USS M[redacted]

Top chord 2x4 SP #2 Dense
Bot chord 2x4 SP #2 Dense
Webs 2x4 SP #3

Deflection meets L/360 live and L/240 total load.

110 mph wind, 9.85 ft mean hgt, ASCE 7-98, CLOSED bldg, Located anywhere in roof, CAT II, EXP B, wind TC DL=5.0 psf, wind BC DL=5.0 psf.

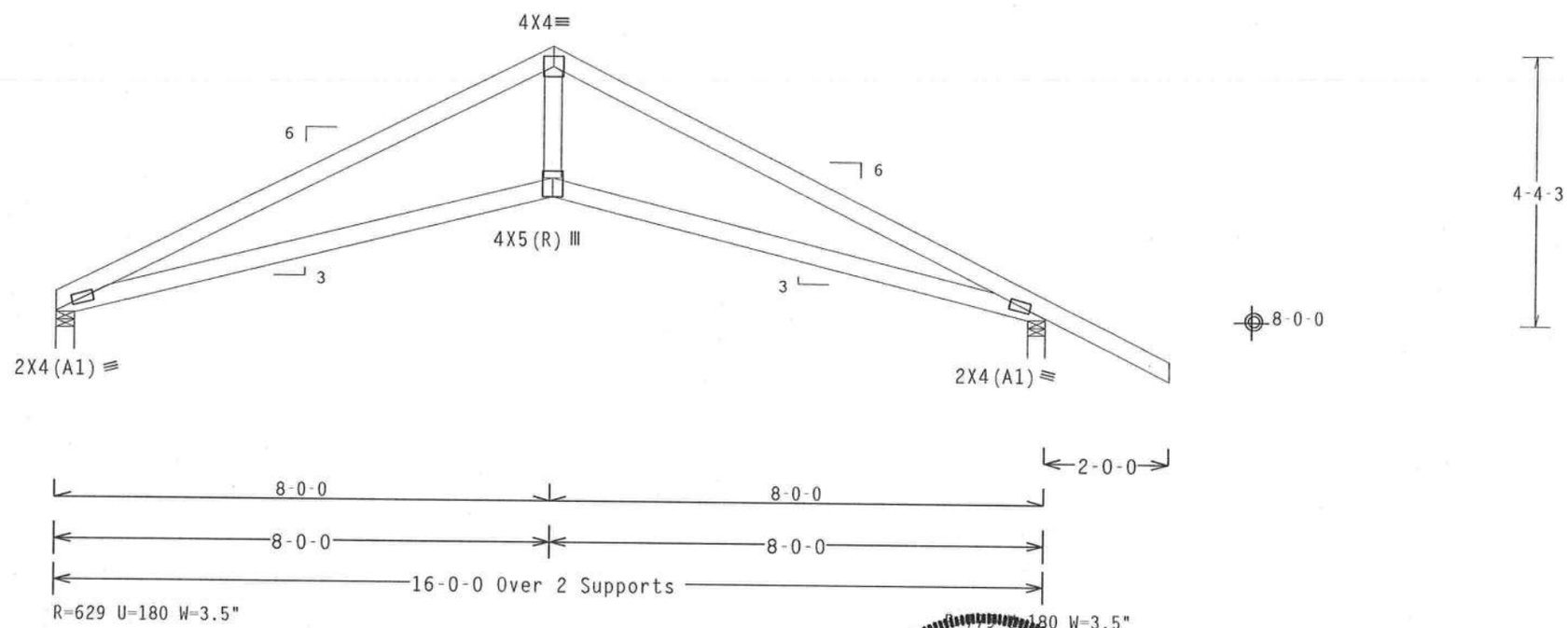

PLT TYP. Wave TPI | Design Crit: TPI-1995(STD)/FBC | 7.04[redacted]0805.16[redacted] | QTY:4 | FL/-/3/-/-/R/- | Scale =.375"/Ft.

ALPINE
Alpine Engineered Products, Inc.
1950 Marley Drive
Haines City, FL 33844

WARNING TRUSSES REQUIRE EXTREME CARE IN FABRICATION, HANDLING, SHIPPING, INSTALLING AND BRACING. REFER TO BCSI 1-03 (BUILDING COMPONENT SAFETY INFORMATION), PUBLISHED BY TPI (TRUSS PLATE INSTITUTE, 583 D'ONOFRIO DR., SUITE 200, MADISON, WI 53719) AND WTCA (WOOD TRUSS COUNCIL OF AMERICA, 6300 ENTERPRISE LN, MADISON, WI 53719) FOR SAFETY PRACTICES PRIOR TO PERFORMING THESE FUNCTIONS. UNLESS OTHERWISE INDICATED, TOP CHORD SHALL HAVE PROPERLY ATTACHED STRUCTURAL PANELS AND BOTTOM CHORD SHALL HAVE A PROPERLY ATTACHED RIGID CEILING.

IMPORTANTFURNISH A COPY OF THIS DESIGN TO THE INSTALLATION CONTRACTOR. ALPINE ENGINEERED PRODUCTS, INC. SHALL NOT BE RESPONSIBLE FOR ANY DEVIATION FROM THIS DESIGN; ANY FAILURE TO BUILD THE TRUSS IN CONFORMANCE WITH TPI; OR FABRICATING, HANDLING, SHIPPING, INSTALLING & BRACING OF TRUSSES. DESIGN CONFORMS WITH APPLICABLE PROVISIONS OF NDS (NATIONAL DESIGN SPEC. BY AF&PA) AND TPI. ALPINE CONNECTOR PLATES ARE MADE OF 20/18/16GA (W,H/S/K) ASTM A653 GRADE 40/60 (W, K/H,S) GALV. STEEL. APPLY PLATES TO EACH FACE OF TRUSS AND, UNLESS OTHERWISE LOCATED ON THIS DESIGN, POSITION PER DRAWINGS 160A-2. ANY INSPECTION OF PLATES FOLLOWED BY (1) SHALL BE PER ANNEX A3 OF TPI1-2002 SEC.3. A SEAL ON THIS DRAWING INDICATES ACCEPTANCE OF PROFESSIONAL ENGINEERING RESPONSIBILITY SOLELY FOR THE TRUSS COMPONENT DESIGN SHOWN. THE SUITABILITY AND USE OF THIS COMPONENT FOR ANY BUILDING IS THE RESPONSIBILITY OF THE BUILDING DESIGNER PER ANSI/TPI 1 SEC. 2.

ARTHUR R. FISHER
LICENSE
No. 59687
STATE OF FLORIDA
PROFESSIONAL ENGINEER

C LL	20.0 PSF	REF R487-- 33401
C DL	10.0 PSF	DATE 09/02/05
BC DL	10.0 PSF	DRW HCUSR487 05245168
BC LL	0.0 PSF	HC-ENG GDL/AF *
TOT.LD.	40.0 PSF	SEQN- 28793
DUR.FAC.	1.25	

(5[redacted] JONA[redacted] PERR[redacted], LOT 1[redacted] PHASE [redacted] ONEH[redacted] C1) [redacted] THIS DWG PROVIDED FROM COMPUTER INPUT LOADS & DIMENSIONS SUBMITTED BY TRUSS M[redacted]

Top chord 2x4 SP #2 Dense
Bot chord 2x4 SP #2 Dense
Webs 2x4 SP #3

Left end vertical not exposed to wind pressure.

110 mph wind, 9.85 ft mean hgt, ASCE 7-98, CLOSED bldg, not located within 4.50 ft from roof edge, CAT II, EXP B, wind TC DL=5.0 psf, wind BC DL=5.0 psf.

Deflection meets L/360 live and L/240 total load.

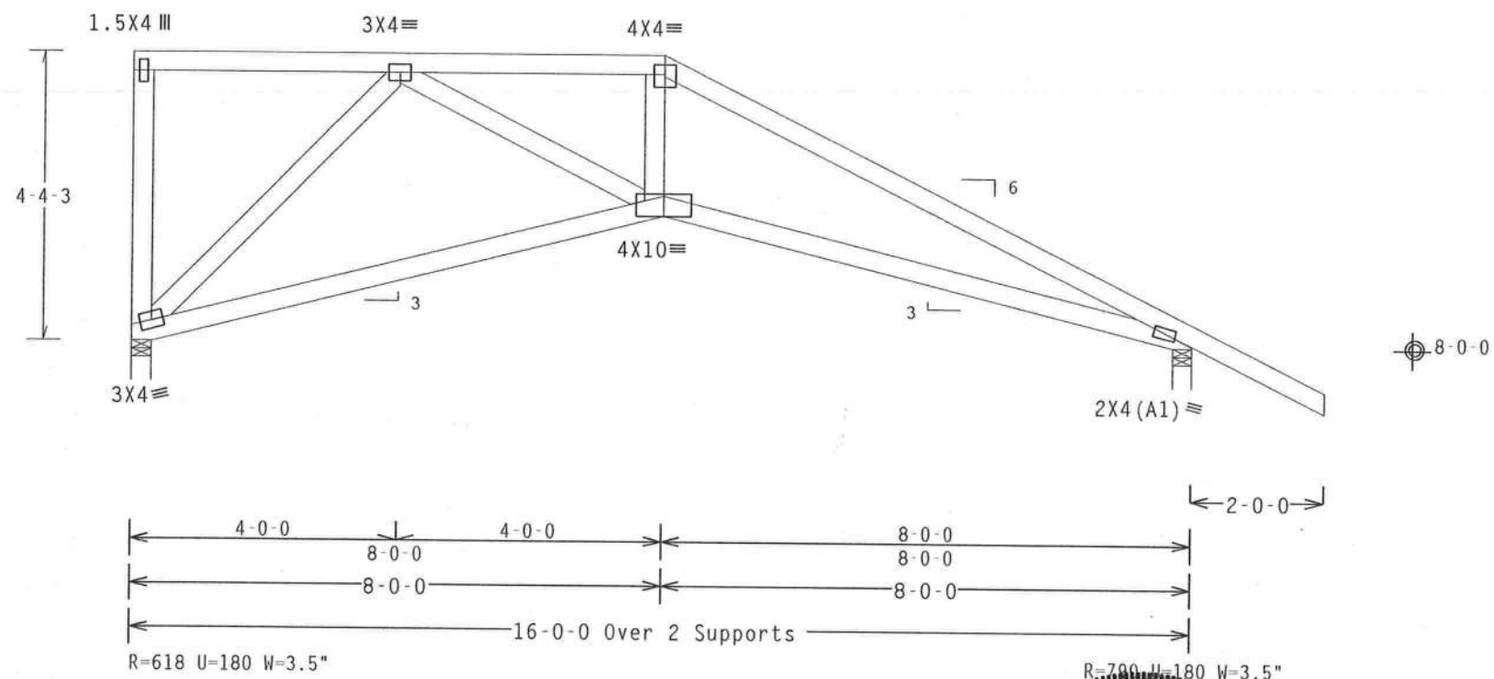

PLT TYP. Wave TPI | Design Crit: TPI-1995(STD)/FBC | 7.04.[redacted]05.16 | QTY: 1 | FL/-/3/-/-/R/- | Scale =.375"/Ft.

ALPINE
Alpine Engineered Products, Inc
1950 Marley Drive
Haines City, FL 33844

WARNING TRUSSES REQUIRE EXTREME CARE IN FABRICATION, HANDLING, SHIPPING, INSTALLING AND BRACING. REFER TO BCSI 1-03 (BUILDING COMPONENT SAFETY INFORMATION), PUBLISHED BY TPI (TRUSS PLATE INSTITUTE, 583 D'ONOFRIO DR., SUITE 200, MADISON, WI 53719) AND WTCA (WOOD TRUSS COUNCIL OF AMERICA, 6300 ENTERPRISE LN, MADISON, WI 53719) FOR SAFETY PRACTICES PRIOR TO PERFORMING THESE FUNCTIONS. UNLESS OTHERWISE INDICATED, TOP CHORD SHALL HAVE PROPERLY ATTACHED STRUCTURAL PANELS AND BOTTOM CHORD SHALL HAVE A PROPERLY ATTACHED RIGID CEILING.

IMPORTANT FURNISH A COPY OF THIS DESIGN TO THE INSTALLATION CONTRACTOR. ALPINE ENGINEERED PRODUCTS, INC. SHALL NOT BE RESPONSIBLE FOR ANY DEVIATION FROM THIS DESIGN; ANY FAILURE TO BUILD THE TRUSS IN CONFORMANCE WITH IPI: OR FABRICATING, HANDLING, SHIPPING, INSTALLING & BRACING OF TRUSSES. DESIGN CONFORMS WITH APPLICABLE PROVISIONS OF NDS (NATIONAL DESIGN SPEC. BY AF&PA) AND TPI. ALPINE CONNECTOR PLATES ARE MADE OF 20/18/16GA (W,H/S/K) ASTM A653 GRADE 40/60 (W, K/H,S) GALV. STEEL. APPLY PLATES TO EACH FACE OF TRUSS AND, UNLESS OTHERWISE LOCATED ON THIS DESIGN, POSITION PER DRAWINGS 160A-2. ANY INSPECTION OF PLATES FOLLOWED BY (1) SHALL BE PER ANNEX A3 OF TPI1-2002 SEC.3. A SEAL ON THIS DRAWING INDICATES ACCEPTANCE OF PROFESSIONAL ENGINEERING RESPONSIBILITY SOLELY FOR THE TRUSS COMPONENT DESIGN SHOWN. THE SUITABILITY AND USE OF THIS COMPONENT FOR ANY BUILDING IS THE RESPONSIBILITY OF THE BUILDING DESIGNER PER ANSI/TPI 1 SEC. 2.

ARTHUR R. FISHER
LICENSE
No. 59687
STATE OF FLORIDA
PROFESSIONAL ENGINEER

TC LL	20.0 PSF	REF	R487-- 33402
TC DL	10.0 PSF	DATE	09/02/05
BC DL	10.0 PSF	DRW	HCUSR487 05245169
BC LL	0.0 PSF	HC-ENG	GDL/AF
TOT.LD.	40.0 PSF	SEQN-	28797
DUR.FAC.	1.25		

(5 JON PERI LOT ASE ONEH - C2, S DWG ED FR UTER LOADS ENSIO MITTE RUSS

Top chord 2x4 SP #2 Dense
Bot chord 2x4 SP #2 Dense
Webs 2x4 SP #3

Left end vertical not exposed to wind pressure.

110 mph wind, 10.35 ft mean hgt, ASCE 7-98, CLOSED bldg, not located within 4.50 ft from roof edge, CAT II, EXP B, wind TC DL=5.0 psf, wind BC DL=5.0 psf.

Deflection meets L/360 live and L/240 total load.

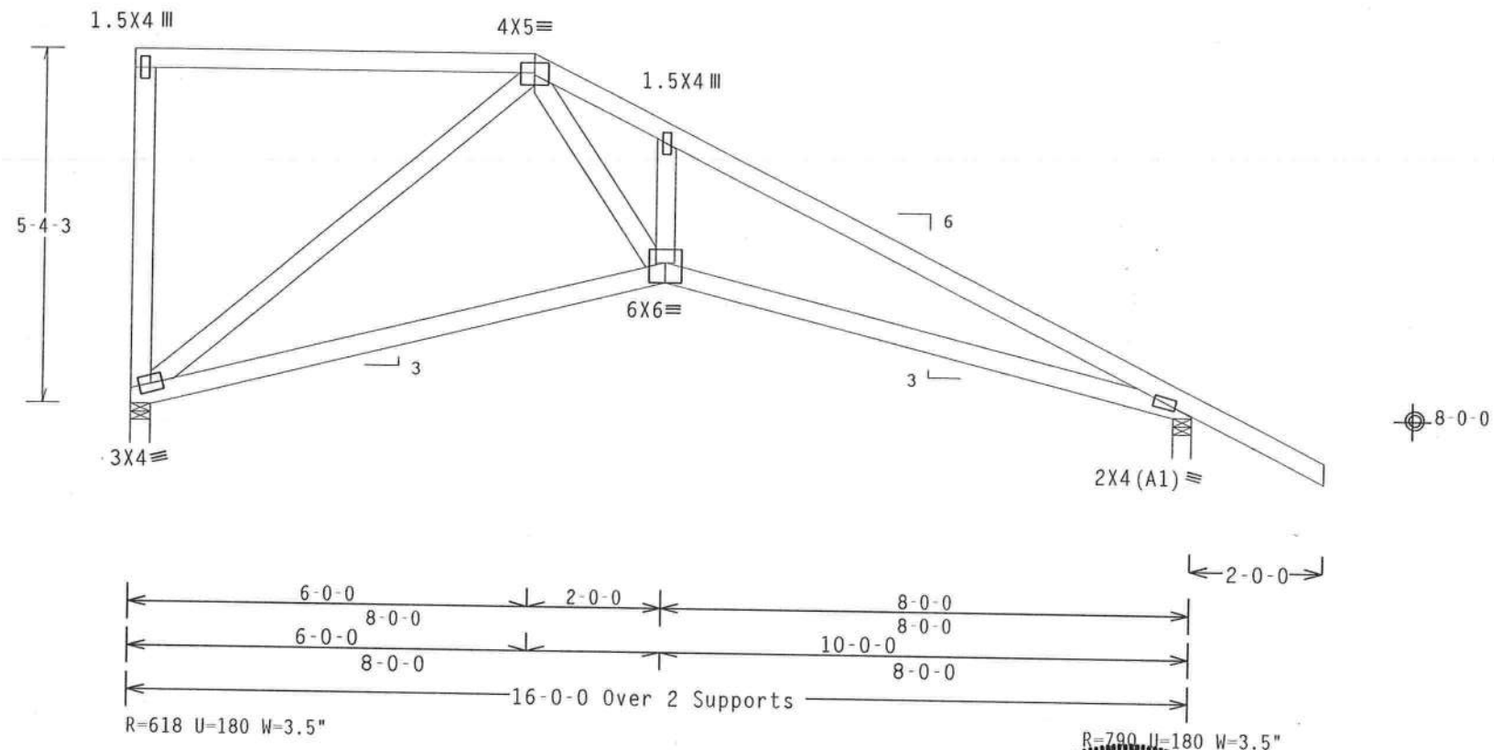

PLT TYP. Wave TPI

Design Crit: TPI-1995(STD)/FBC

7.04.0805.16 01.1

FL/-/3/-/-/R/-

Scale =.375"/Ft.

TC LL	20.0 PSF	REF R487-- 33403
TC DL	10.0 PSF	DATE 09/02/05
BC DL	10.0 PSF	DRW HCUSR487 05245170
BC LL	0.0 PSF	HC-ENG GDL/AF
TOT.LD.	40.0 PSF	SEQN- 28801
DUR.FAC.	1.25	

ALPINE

Alpine Engineered Products, Inc
1950 Marley Drive
Haines City, FL 33844
FL Certificate of Authorization # 562

WARNING TRUSSES REQUIRE EXTREME CARE IN FABRICATION, HANDLING, SHIPPING, INSTALLING AND BRACING. REFER TO BCSI 1-03 (BUILDING COMPONENT SAFETY INFORMATION), PUBLISHED BY TPI (TRUSS PLATE INSTITUTE, 583 D'ONOFRIO DR., SUITE 200, MADISON, WI 53719) AND WTCA (WOOD TRUSS COUNCIL OF AMERICA, 6300 ENTERPRISE LN, MADISON, WI 53719) FOR SAFETY PRACTICES PRIOR TO PERFORMING THESE FUNCTIONS. UNLESS OTHERWISE INDICATED, TOP CHORD SHALL HAVE PROPERLY ATTACHED STRUCTURAL PANELS AND BOTTOM CHORD SHALL HAVE A PROPERLY ATTACHED RIGID CEILING.

IMPORTANT FURNISH A COPY OF THIS DESIGN TO THE INSTALLATION CONTRACTOR. ALPINE ENGINEERED PRODUCTS, INC. SHALL NOT BE RESPONSIBLE FOR ANY DEVIATION FROM THIS DESIGN; ANY FAILURE TO BUILD THE TRUSS IN CONFORMANCE WITH TPI; OR FABRICATING, HANDLING, SHIPPING, INSTALLING & BRACING OF TRUSSES. DESIGN CONFORMS WITH APPLICABLE PROVISIONS OF NDS (NATIONAL DESIGN SPEC, BY AF&PA) AND TPI. ALPINE CONNECTOR PLATES ARE MADE OF 20/18/16GA (W,H/S/K) ASTM A653 GRADE 40/60 (W. K/H.S) GALV. STEEL. APPLY PLATES TO EACH FACE OF TRUSS AND, UNLESS OTHERWISE LOCATED ON THIS DESIGN, POSITION PER DRAWINGS 160A-Z. ANY INSPECTION OF PLATES FOLLOWED BY (1) SHALL BE PER ANNEX A3 OF TPI1-2002 SEC.3. A SEAL ON THIS DRAWING INDICATES ACCEPTANCE OF PROFESSIONAL ENGINEERING RESPONSIBILITY SOLELY FOR THE TRUSS COMPONENT DESIGN SHOWN. THE SUITABILITY AND USE OF THIS COMPONENT FOR ANY BUILDING IS THE RESPONSIBILITY OF THE BUILDING DESIGNER PER ANSI/TPI 1 SEC. 2.

ARTHUR R. FISHER
LICENSE
No. 59687
STATE OF
FLORIDA
PROFESSIONAL ENGINEER

(S JON PER LOT ASE ONEH - C3,

Top chord 2x4 SP #2 Dense
Bot chord 2x4 SP #2 Dense
Webs 2x4 SP #3

Left end vertical not exposed to wind pressure.

110 mph wind, 10.78 ft mean hgt, ASCE 7-98, CLOSED bldg, not located within 4.50 ft from roof edge, CAT II, EXP B, wind TC DL=5.0 psf, wind BC DL=5.0 psf.

Deflection meets L/360 live and L/240 total load.

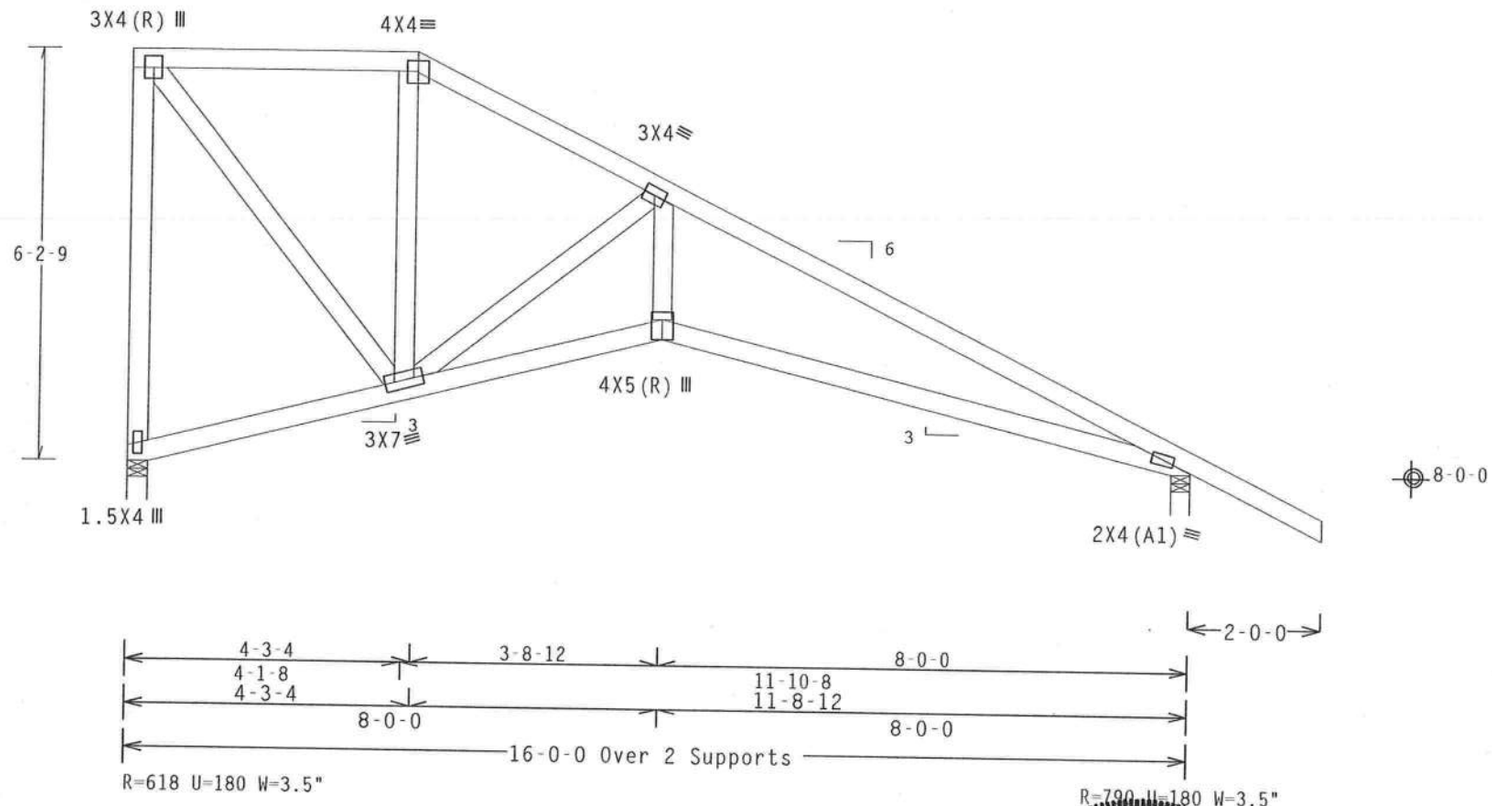

PLT TYP. Wave TPI

Design Crit: TPI-1995(STD)/FBC

7.04.0809.16

QTY: 1

FL/-/3/-/-/R/-

Scale =.375"/Ft.

ALPINE

Alpine Engineered Products, Inc
1950 Marley Drive
Haines City, FL 33844
FL Certificate of Authorization # 567

WARNING TRUSSES REQUIRE EXTREME CARE IN FABRICATION, HANDLING, SHIPPING, INSTALLING AND BRACING. REFER TO BCSI 1-03 (BUILDING COMPONENT SAFETY INFORMATION), PUBLISHED BY TPI (TRUSS PLATE INSTITUTE, 583 D'ONOFRIO DR., SUITE 200, MADISON, WI 53719) AND WTCA (WOOD TRUSS COUNCIL OF AMERICA, 6300 ENTERPRISE LN, MADISON, WI 53719) FOR SAFETY PRACTICES PRIOR TO PERFORMING THESE FUNCTIONS. UNLESS OTHERWISE INDICATED, TOP CHORD SHALL HAVE PROPERLY ATTACHED STRUCTURAL PANELS AND BOTTOM CHORD SHALL HAVE A PROPERLY ATTACHED RIGID CEILING.

IMPORTANT FURNISH A COPY OF THIS DESIGN TO THE INSTALLATION CONTRACTOR. ALPINE ENGINEERED PRODUCTS, INC. SHALL NOT BE RESPONSIBLE FOR ANY DEVIATION FROM THIS DESIGN; ANY FAILURE TO BUILD THE TRUSS IN CONFORMANCE WITH TPI; OR FABRICATING, HANDLING, SHIPPING, INSTALLING & BRACING OF TRUSSES. DESIGN CONFORMS WITH APPLICABLE PROVISIONS OF NDS (NATIONAL DESIGN SPEC. BY AF&PA) AND TPI. ALPINE CONNECTOR PLATES ARE MADE OF 20/18/16GA (W,H/S/K) ASTM A653 GRADE 40/60 (N, K/H,S) GALV. STEEL. APPLY PLATES TO EACH FACE OF TRUSS AND, UNLESS OTHERWISE LOCATED ON THIS DESIGN, POSITION PER DRAWINGS 160A-Z. ANY INSPECTION OF PLATES FOLLOWED BY (1) SHALL BE PER ANNEX A3 OF TPI1-2002 SEC.3. A SEAL ON THIS DRAWING INDICATES ACCEPTANCE OF PROFESSIONAL ENGINEERING RESPONSIBILITY SOLELY FOR THE TRUSS COMPONENT DESIGN SHOWN. THE SUITABILITY AND USE OF THIS COMPONENT FOR ANY BUILDING IS THE RESPONSIBILITY OF THE BUILDING DESIGNER PER ANSI/TPI 1 SEC. 2.

ARTHUR R. FISHER
LICENSE
No. 59687
STATE OF FLORIDA
PROFESSIONAL ENGINEER

TC LL	20.0 PSF	REF R487-- 33404
TC DL	10.0 PSF	DATE 09/02/05
BC DL	10.0 PSF	DRW HCUSR487 05245171
BC LL	0.0 PSF	HC-ENG GDL/AF
TOT.LD.	40.0 PSF	SEQN- 28805
DUR.FAC.	1.25	

(-JON PER LOT MASE STONEI - CO S DWG RED FR PUTER (LOAD MENSIO BMITT RUSS

Top chord 2x4 SP #2 Dense
Bot chord 2x4 SP #2 Dense
Webs 2x4 SP #3

SPECIAL LOADS
------(LUMBER DUR.FAC.=1.25 / PLATE DUR.FAC.=1.25)

TC - From	82 PLF at	-2.00 to	82 PLF at	18.00
BC - From	4 PLF at	-2.00 to	4 PLF at	0.00
BC - From	20 PLF at	0.00 to	20 PLF at	16.00
BC - From	4 PLF at	16.00 to	4 PLF at	18.00

See DWGS A11015EC1103 & GBLLETIN0405 for more requirements.

110 mph wind, 9.68 ft mean hgt, ASCE 7-98, CLOSED bldg, Located anywhere in roof, CAT II, EXP B, wind TC DL=5.0 psf, wind BC DL=5.0 psf.

Deflection meets L/360 live and L/240 total load.

Shim all supports to solid bearing.

THE BUILDING DESIGNER IS RESPONSIBLE FOR THE DESIGN OF THE ROOF AND CEILING DIAPHRAGMS, GABLE END SHEAR WALLS, AND SUPPORTING SHEAR WALLS. SHEAR WALLS MUST PROVIDE CONTINUOUS LATERAL RESTRAINT TO THE GABLE END. ALL CONNECTIONS TO BE DESIGNED BY THE BUILDING DESIGNER.

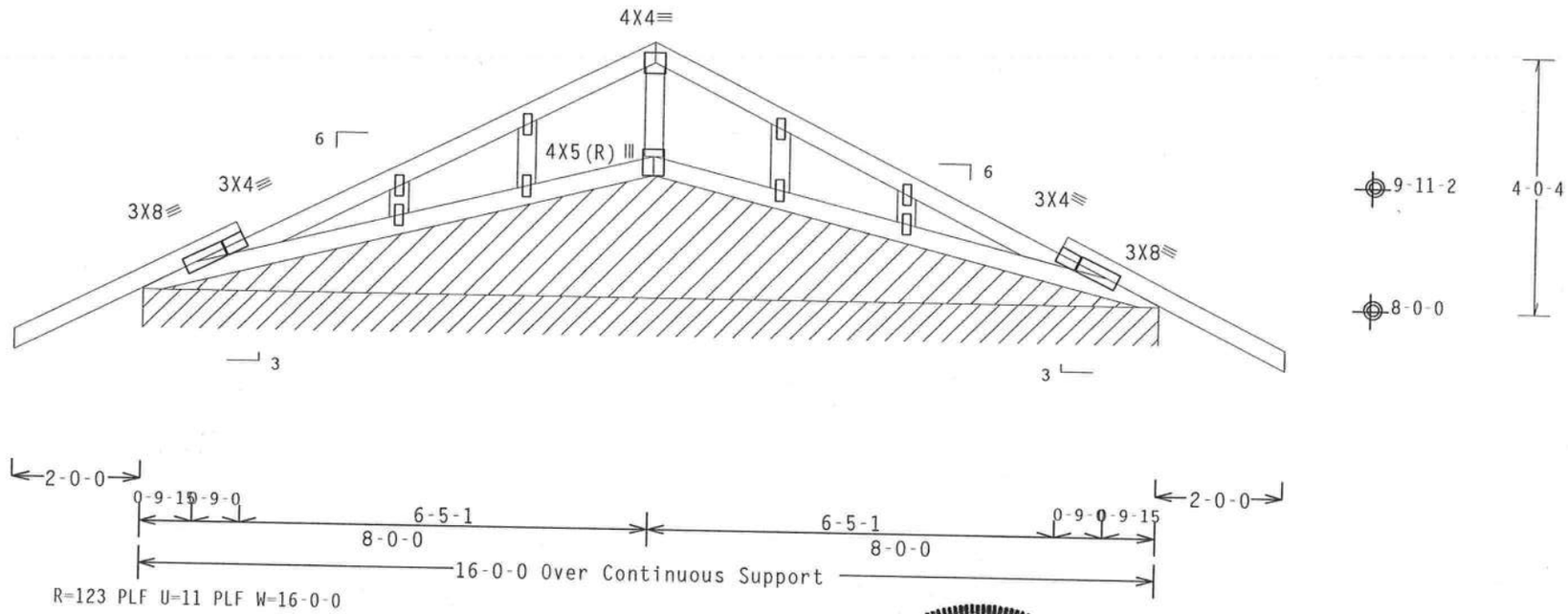

Note: All Plates Are 1.5X4 Except As Shown.

PLT TYP. Wave TPI Design Crit: TPI-1995(STD)/FBC 7.04 - 805.16 QTY: 1 FL/-/3/-/-/R/- Scale =.375"/Ft.

ALPINE
Alpine Engineered Products, Inc
1950 Marley Drive
Haines City, FL 33844
FL Certificate of Authorization # 567

WARNING TRUSSES REQUIRE EXTREME CARE IN FABRICATION, HANDLING, SHIPPING, INSTALLING AND BRACING. REFER TO BCSI 1-03 (BUILDING COMPONENT SAFETY INFORMATION), PUBLISHED BY TPI (TRUSS PLATE INSTITUTE, 583 D'ONOFRIO DR., SUITE 200, MADISON, WI 53719) AND WTCA (WOOD TRUSS COUNCIL OF AMERICA, 6300 ENTERPRISE LN, MADISON, WI 53719) FOR SAFETY PRACTICES PRIOR TO PERFORMING THESE FUNCTIONS. UNLESS OTHERWISE INDICATED, TOP CHORD SHALL HAVE PROPERLY ATTACHED STRUCTURAL PANELS AND BOTTOM CHORD SHALL HAVE A PROPERLY ATTACHED RIGID CEILING.

IMPORTANT FURNISH A COPY OF THIS DESIGN TO THE INSTALLATION CONTRACTOR. ALPINE ENGINEERED PRODUCTS, INC. SHALL NOT BE RESPONSIBLE FOR ANY DEVIATION FROM THIS DESIGN; ANY FAILURE TO BUILD THE TRUSS IN CONFORMANCE WITH TPI; OR FABRICATING, HANDLING, SHIPPING, INSTALLING & BRACING OF TRUSSES. DESIGN CONFORMS WITH APPLICABLE PROVISIONS OF NDS (NATIONAL DESIGN SPEC. BY AF&PA) AND TPI. ALPINE CONNECTOR PLATES ARE MADE OF 20/18/16GA (W,H/S/K) ASTM A653 GRADE 40/60 (M. K/M,S) GALV. STEEL. APPLY PLATES TO EACH FACE OF TRUSS AND, UNLESS OTHERWISE LOCATED ON THIS DESIGN, POSITION PER DRAWINGS 160A-Z. ANY INSPECTION OF PLATES FOLLOWED BY (I) SHALL BE PER ANNEX A3 OF TPI1-2002 SEC.3. A SEAL ON THIS DRAWING INDICATES ACCEPTANCE OF PROFESSIONAL ENGINEERING RESPONSIBILITY SOLELY FOR THE TRUSS COMPONENT DESIGN SHOWN. THE SUITABILITY AND USE OF THIS COMPONENT FOR ANY BUILDING IS THE RESPONSIBILITY OF THE BUILDING DESIGNER PER ANSI/TPI 1 SEC. 2.

ARTHUR R. FISHER
LICENSE
No. 59687
STATE OF
FLORIDA
PROFESSIONAL ENGINEER

TC LL	20.0 PSF	REF R487-- 33405
TC DL	10.0 PSF	DATE 09/02/05
BC DL	10.0 PSF	DRW HCUSR487 05245172
BC LL	0.0 PSF	HC-ENG GDL/AF
TOT.LD.	40.0 PSF	SEQN- 28814
DUR.FAC.	1.25	

(2-JO N PE LOT PHASE STONE - S DWG RED FF PUTER (LOAD MENSI BMITT RUSS

Top chord 2x4 SP #2 Dense
Bot chord 2x4 SP #2 Dense
Webs 2x4 SP #3

Deflection meets L/360 live and L/240 total load.

110 mph wind, 9.91 ft mean hgt, ASCE 7-98, CLOSED bldg, not located within 4.50 ft from roof edge, CAT II, EXP B, wind TC DL=5.0 psf, wind BC DL=5.0 psf.

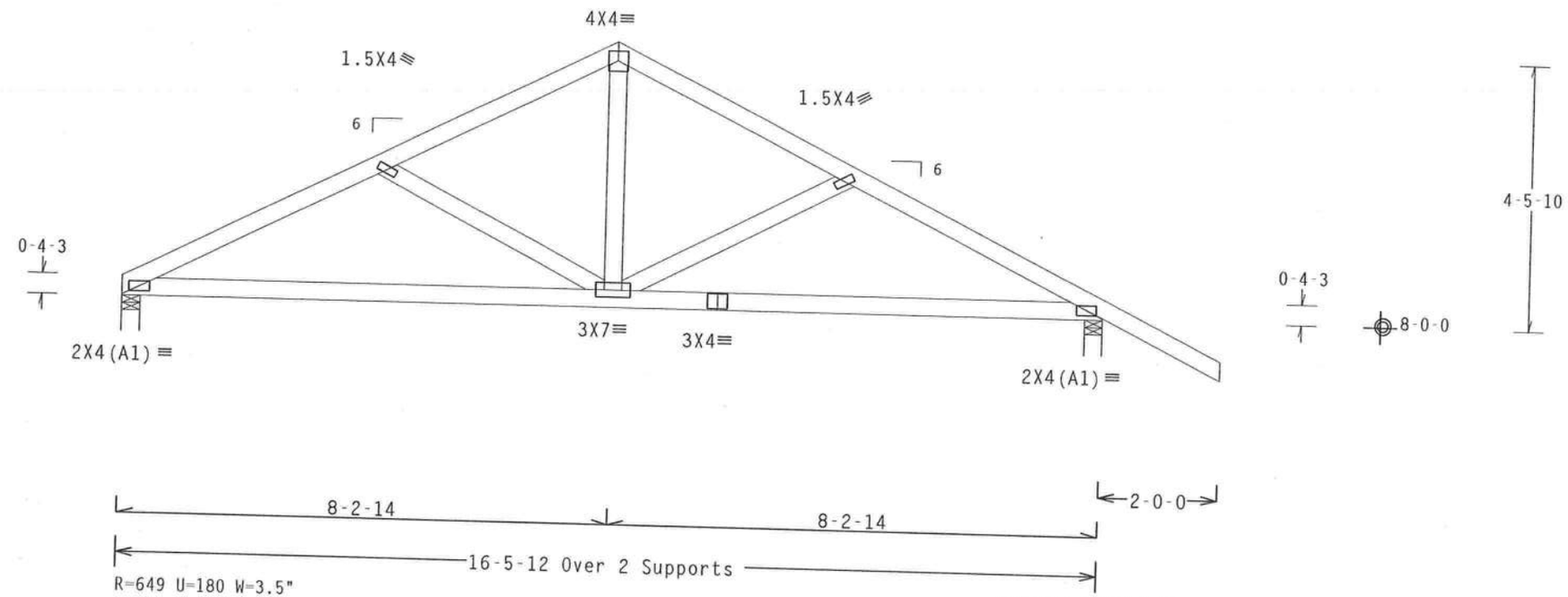

PLT TYP. Wave TPI

Design Crit: TPI-1995(STD)/FBC

7.04.0805.16

QTY 1

ALPINE

Alpine Engineered Products, Inc.
1950 Marley Drive
Haines City, FL 33844
FL Certificate of Authorization # 567

WARNING TRUSSES REQUIRE EXTREME CARE IN FABRICATION, HANDLING, SHIPPING, INSTALLING AND BRACING. REFER TO BCSI 1-03 (BUILDING COMPONENT SAFETY INFORMATION), PUBLISHED BY TPI (TRUSS PLATE INSTITUTE, 583 D'ONOFRIO DR., SUITE 200, MADISON, WI 53719) AND WTCA (WOOD TRUSS COUNCIL OF AMERICA, 6300 ENTERPRISE LN. MADISON, WI 53719) FOR SAFETY PRACTICES PRIOR TO PERFORMING THESE FUNCTIONS. UNLESS OTHERWISE INDICATED. TOP CHORD SHALL HAVE PROPERLY ATTACHED STRUCTURAL PANELS AND BOTTOM CHORD SHALL HAVE A PROPERLY ATTACHED RIGID CEILING.

IMPORTANT FURNISH A COPY OF THIS DESIGN TO THE INSTALLATION CONTRACTOR. ALPINE ENGINEERED PRODUCTS, INC. SHALL NOT BE RESPONSIBLE FOR ANY DEVIATION FROM THIS DESIGN; ANY FAILURE TO BUILD THE TRUSS IN CONFORMANCE WITH TPI1; OR FABRICATING, HANDLING, SHIPPING, INSTALLING & BRACING OF TRUSSES. DESIGN CONFORMS WITH APPLICABLE PROVISIONS OF NDS (NATIONAL DESIGN SPEC. BY AF&PA) AND TPI. ALPINE CONNECTOR PLATES ARE MADE OF 20/18/16GA (H,H/S/K) ASTM A653 GRADE 40/60 (W, K/H,S) GALV. STEEL. APPLY PLATES TO EACH FACE OF TRUSS AND, UNLESS OTHERWISE LOCATED ON THIS DESIGN, POSITION PER DRAWINGS 160A-Z. ANY INSPECTION OF PLATES FOLLOWED BY (1) SHALL BE PER ANNEX A3 OF TPI1-2002 SEC.3. A SEAL ON THIS DRAWING INDICATES ACCEPTANCE OF PROFESSIONAL ENGINEERING RESPONSIBILITY SOLELY FOR THE TRUSS COMPONENT DESIGN SHOWN. THE SUITABILITY AND USE OF THIS COMPONENT FOR ANY BUILDING IS THE RESPONSIBILITY OF THE BUILDING DESIGNER PER ANSI/TPI 1 SEC. 2.

ARTHUR R. FISHER
LICENSE
No. 59687
STATE OF
FLORIDA
PROFESSIONAL ENGINEER

FL/-/3/-/-/R/-

TC LL	20.0 PSF	Scale =.375"/Ft.
TC DL	10.0 PSF	REF R487-- 33406
BC DL	10.0 PSF	DATE 09/02/05
BC LL	0.0 PSF	DRW HCUSR487 05245130
TOT.LD.	40.0 PSF	HC-ENG JB/AF *
DUR.FAC.	1.25	SEQN- 27270

(5-392-JONATHON PERRY / LOT 18 PHASE II STONEHANGE - D-1)

DWG D FRO UTER I LOADS NSION MITTED USS M

Top chord 2x4 SP #2 Dense
Bot chord 2x6 SP #1 Dense :B2 2x6 SP #2:
Webs 2x4 SP #3

SPECIAL LOADS
------(LUMBER DUR.FAC.=1.25 / PLATE DUR.FAC.=1.25)
TC - From 60 PLF at 0.00 to 60 PLF at 18.48
BC - From 20 PLF at 0.00 to 20 PLF at 16.48
BC - From 4 PLF at 16.48 to 4 PLF at 18.48
BC - 1232 LB Conc. Load at 1.42, 3.42, 5.42, 7.42
BC - 3038 LB Conc. Load at 9.42

Deflection meets L/360 live and L/240 total load.

2 COMPLETE TRUSSES REQUIRED

Nailing Schedule: (12d_Box_or_Gun_(0.128"x3.25"_min.)_nails)
Top Chord: 1 Row @12.00" o.c.
Bot Chord: 2 Rows @ 6.00" o.c. (Each Row)
Webs : 1 Row @ 4" o.c.
Use equal spacing between rows and stagger nails in each row to avoid splitting.

110 mph wind, 15.00 ft mean hgt, ASCE 7-98, CLOSED bldg, Located anywhere in roof, CAT II, EXP B, wind TC DL=5.0 psf, wind BC DL=5.0 psf.

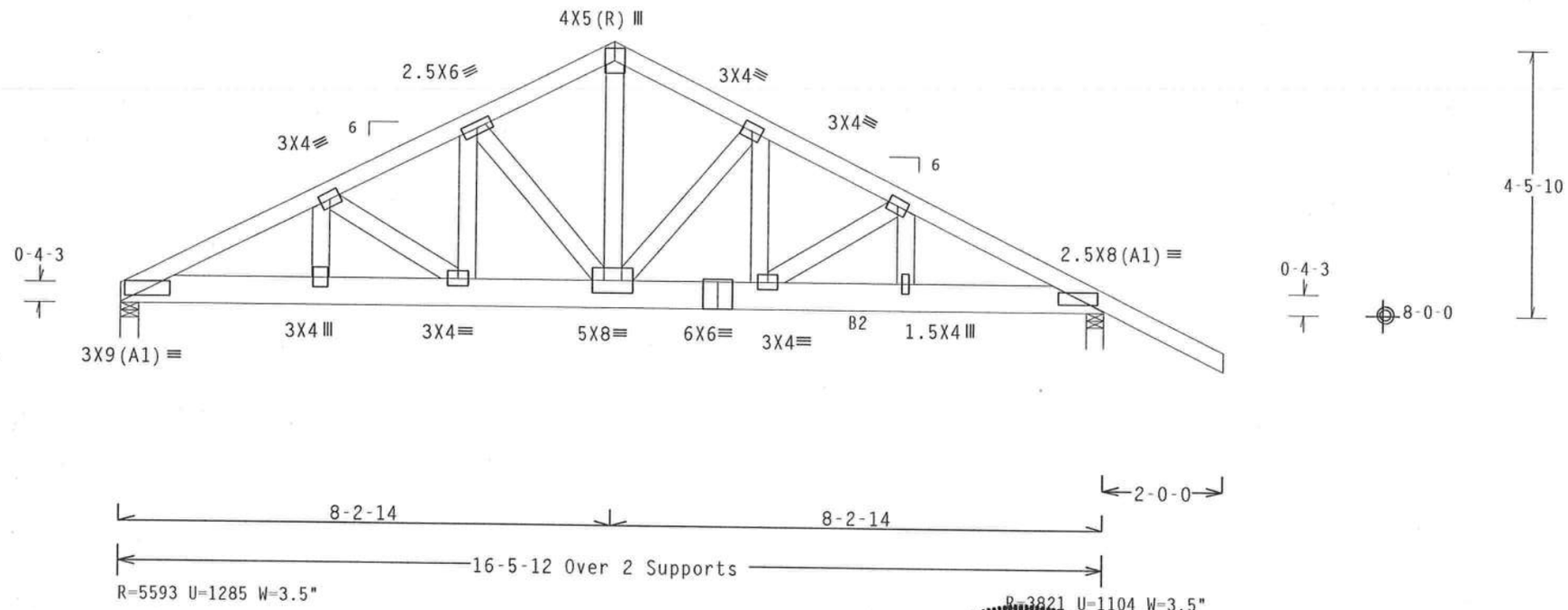

PLT TYP. Wave TPI Design Crit: TPI-1995(STD)/FBC 7.04 5805.16 QTY:1 FL/-/3/-/-/R/- Scale =.375"/Ft.

ALPINE
Alpine Engineered Products, Inc
1950 Marley Drive
Haines City, FL 33844
FL Certificate of Authorization # 567

WARNING TRUSSES REQUIRE EXTREME CARE IN FABRICATION, HANDLING, SHIPPING, INSTALLING AND BRACING. REFER TO BCSI 1-03 (BUILDING COMPONENT SAFETY INFORMATION), PUBLISHED BY TPI (TRUSS PLATE INSTITUTE, 583 D'ONOFRIO DR., SUITE 200, MADISON, WI 53719) AND WTCA (WOOD TRUSS COUNCIL OF AMERICA, 6300 ENTERPRISE LN, MADISON, WI 53719) FOR SAFETY PRACTICES PRIOR TO PERFORMING THESE FUNCTIONS. UNLESS OTHERWISE INDICATED, TOP CHORD SHALL HAVE PROPERLY ATTACHED STRUCTURAL PANELS AND BOTTOM CHORD SHALL HAVE A PROPERLY ATTACHED RIGID CEILING.

IMPORTANTFURNISH A COPY OF THIS DESIGN TO THE INSTALLATION CONTRACTOR. ALPINE ENGINEERED PRODUCTS, INC. SHALL NOT BE RESPONSIBLE FOR ANY DEVIATION FROM THIS DESIGN; ANY FAILURE TO BUILD THE TRUSS IN CONFORMANCE WITH TPI; OR FABRICATING, HANDLING, SHIPPING, INSTALLING & BRACING OF TRUSSES. DESIGN CONFORMS WITH APPLICABLE PROVISIONS OF NDS (NATIONAL DESIGN SPEC. BY AF&PA) AND TPI. ALPINE CONNECTOR PLATES ARE MADE OF 20/18/16GA (W,H/S/K) ASTM A653 GRADE 40/60 (W, K/H,S) GALV. STEEL. APPLY PLATES TO EACH FACE OF TRUSS AND, UNLESS OTHERWISE LOCATED ON THIS DESIGN, POSITION PER DRAWINGS 160A-2. ANY INSPECTION OF PLATES FOLLOWED BY (I) SHALL BE PER ANNEX A3 OF TPI1-2002 SEC.3. A SEAL ON THIS DRAWING INDICATES ACCEPTANCE OF PROFESSIONAL ENGINEERING RESPONSIBILITY SOLELY FOR THE TRUSS COMPONENT DESIGN SHOWN. THE SUITABILITY AND USE OF THIS COMPONENT FOR ANY BUILDING IS THE RESPONSIBILITY OF THE BUILDING DESIGNER PER ANSI/TPI 1 SEC. 2.

ARTHUR R. FISHER LICENSE No. 59687 STATE OF FLORIDA PROFESSIONAL ENGINEER

TC LL	20.0 PSF	REF R487-- 33407
TC DL	10.0 PSF	DATE 09/02/05
BC DL	10.0 PSF	DRW HCUSR487 05245136
BC LL	0.0 PSF	HC-ENG JB/AF
TOT.LD.	40.0 PSF	SEQN- 27278
DUR.FAC.	1.25	
SPACING	24.0"	JREF- 1S05487 704

(5-392-JONATHON PERRY / LOT 18 PHASE II STONEHANGE - H7BT)

THIS DWG PREPARED FROM COMPUTER INPUT LOADS & DIMENSIONS SUBMITTED BY TRUSS MFR.

Top chord 2x4 SP #2 Dense
Bot chord 2x4 SP #2 Dense
Webs 2x4 SP #3 :W1, W7 2x10 SP SS:

110 mph wind, 15.00 ft mean hgt, ASCE 7-98, CLOSED bldg, Located anywhere in roof, CAT II, EXP B, wind TC DL=5.0 psf, wind BC DL=5.0 psf.

SPECIAL LOADS
------(LUMBER DUR.FAC.=1.25 / PLATE DUR.FAC.=1.25)
TC - From 60 PLF at 0.00 to 60 PLF at 18.48
BC - From 20 PLF at 0.00 to 20 PLF at 16.48
BC - From 4 PLF at 16.48 to 4 PLF at 18.48
TC - 131 LB Conc. Load at 7.06, 7.42, 9.42
BC - 520 LB Conc. Load at 7.00, 9.48
BC - 112 LB Conc. Load at 7.42

#1 hip supports 7-0-0 jacks with no webs.

Deflection meets L/360 live and L/240 total load.

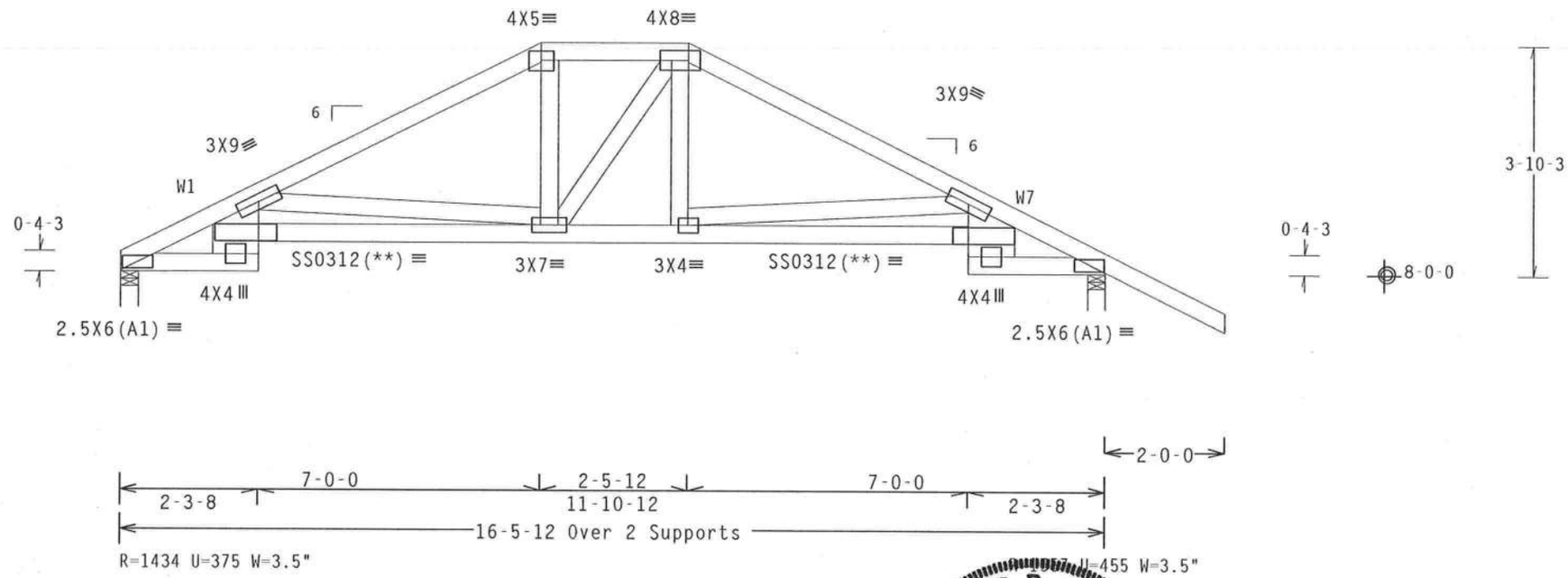

PLT TYP. 18 Gauge HS,Wave TPI Design Crit: TPI-1995(STD)/FBC 7.04.0805.16 QTY 1 FL/-/3/-/-/R/- Scale =.375"/Ft.

ALPINE
Alpine Engineered Products, Inc.
1950 Marley Drive
Haines City, FL 33844

WARNING TRUSSES REQUIRE EXTREME CARE IN FABRICATION, HANDLING, SHIPPING, INSTALLING AND BRACING. REFER TO BCSI 1-03 (BUILDING COMPONENT SAFETY INFORMATION), PUBLISHED BY TPI (TRUSS PLATE INSTITUTE, 583 D'ONOFRIO DR., SUITE 200, MADISON, WI 53719) AND WTCA (WOOD TRUSS COUNCIL OF AMERICA, 6300 ENTERPRISE LN, MADISON, WI 53719) FOR SAFETY PRACTICES PRIOR TO PERFORMING THESE FUNCTIONS. UNLESS OTHERWISE INDICATED, TOP CHORD SHALL HAVE PROPERLY ATTACHED STRUCTURAL PANELS AND BOTTOM CHORD SHALL HAVE A PROPERLY ATTACHED RIGID CEILING.

IMPORTANT FURNISH A COPY OF THIS DESIGN TO THE INSTALLATION CONTRACTOR. ALPINE ENGINEERED PRODUCTS, INC. SHALL NOT BE RESPONSIBLE FOR ANY DEVIATION FROM THIS DESIGN; ANY FAILURE TO BUILD THE TRUSS IN CONFORMANCE WITH TPI; OR FABRICATING, HANDLING, SHIPPING, INSTALLING & BRACING OF TRUSSES. DESIGN CONFORMS WITH APPLICABLE PROVISIONS OF NDS (NATIONAL DESIGN SPEC, BY AF&PA) AND TPI. ALPINE CONNECTOR PLATES ARE MADE OF 20/18/16GA (W,H/S/K) ASTM A653 GRADE 40/60 (W, K/H,S) GALV. STEEL. APPLY PLATES TO EACH FACE OF TRUSS AND, UNLESS OTHERWISE LOCATED ON THIS DESIGN, POSITION PER DRAWINGS 160A-Z. ANY INSPECTION OF PLATES FOLLOWED BY (I) SHALL BE PER ANNEX A3 OF TPI1-2002 SEC.3. A SEAL ON THIS DRAWING INDICATES ACCEPTANCE OF PROFESSIONAL ENGINEERING RESPONSIBILITY SOLELY FOR THE TRUSS COMPONENT DESIGN SHOWN. THE SUITABILITY AND USE OF THIS COMPONENT FOR ANY BUILDING IS THE RESPONSIBILITY OF THE BUILDING DESIGNER PER ANSI/TPI 1 SEC. 2.

ARTHUR R. FISHER
LICENSE
No. 59687
STATE OF FLORIDA
PROFESSIONAL ENGINEER

TC LL	20.0 PSF	REF R487-- 33408
TC DL	10.0 PSF	DATE 09/02/05
BC DL	10.0 PSF	DRW HCUSR487 05245133
BC LL	0.0 PSF	HC-ENG JB/AF
TOT.LD.	40.0 PSF	SEQN- 27325
DUR.FAC.	1.25	
SPACING	24.0"	JREF- 1S05487.704

DWG F[redacted]D FRO[redacted]TER I[redacted]LOADS [redacted]NSIONS[redacted]MITTED [redacted]USS M[redacted]

(5-392-JONATHON PERRY / LOT 18 PHASE II STONEHANGE - DT)

Top chord 2x4 SP #2 Dense
Bot chord 2x4 SP #2 Dense
Webs 2x4 SP #3 :W1, W5 2x6 SP #2:

Deflection meets L/360 live and L/240 total load.

110 mph wind, 9.91 ft mean hgt, ASCE 7-98, CLOSED bldg, not located within 4.50 ft from roof edge, CAT II, EXP B, wind TC DL=5.0 psf, wind BC DL=5.0 psf.

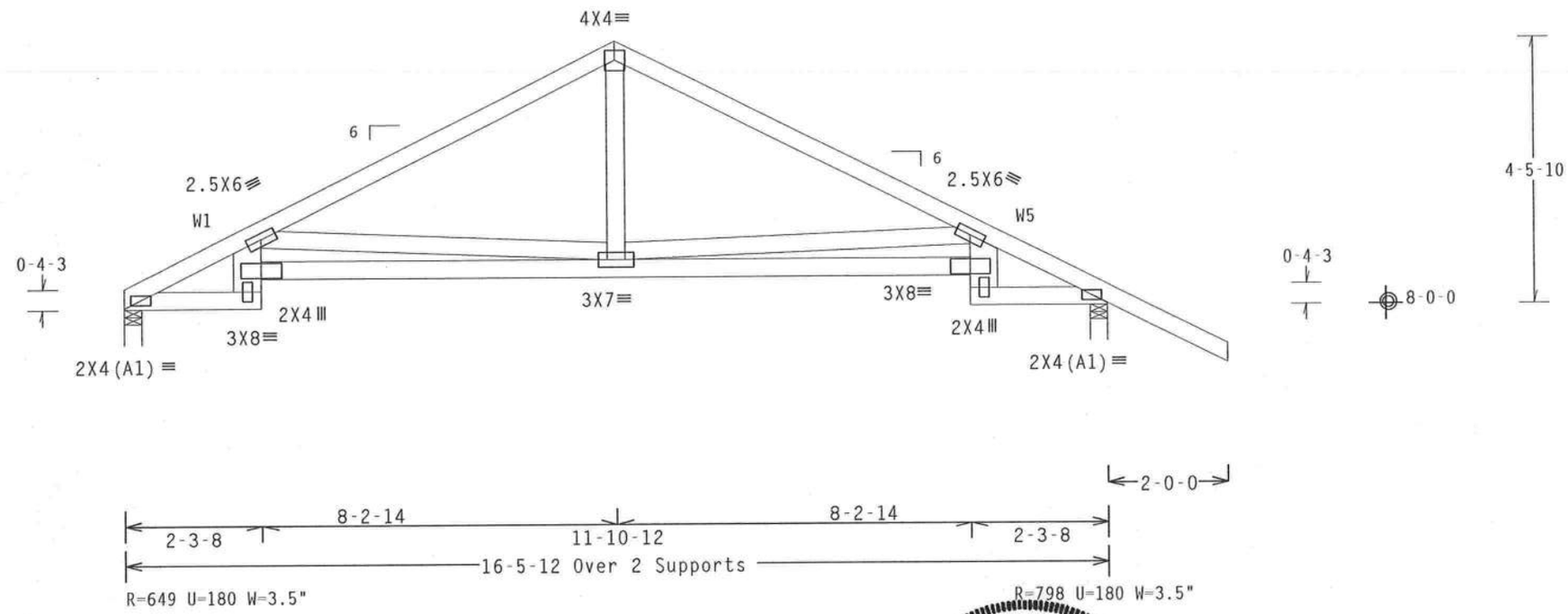

PLT TYP. Wave TPI | Design Crit: TPI-1995(STD)/FBC | 7.04 [redacted]5:18 | QT:2 | FL/-/3/-/-/R/- | Scale =.375"/Ft.

ALPINE
Alpine Engineered Products, Inc.
1950 Marley Drive

WARNING TRUSSES REQUIRE EXTREME CARE IN FABRICATION, HANDLING, SHIPPING, INSTALLING AND BRACING. REFER TO BCSI 1-03 (BUILDING COMPONENT SAFETY INFORMATION), PUBLISHED BY TPI (TRUSS PLATE INSTITUTE, 583 D'ONOFRIO DR., SUITE 200, MADISON, WI 53719) AND WTCA (WOOD TRUSS COUNCIL OF AMERICA, 6300 ENTERPRISE LN, MADISON, WI 53719) FOR SAFETY PRACTICES PRIOR TO PERFORMING THESE FUNCTIONS. UNLESS OTHERWISE INDICATED, TOP CHORD SHALL HAVE PROPERLY ATTACHED STRUCTURAL PANELS AND BOTTOM CHORD SHALL HAVE A PROPERLY ATTACHED RIGID CEILING.

IMPORTANT FURNISH A COPY OF THIS DESIGN TO THE INSTALLATION CONTRACTOR. ALPINE ENGINEERED PRODUCTS, INC. SHALL NOT BE RESPONSIBLE FOR ANY DEVIATION FROM THIS DESIGN; ANY FAILURE TO BUILD THE TRUSS IN CONFORMANCE WITH TPI; OR FABRICATING, HANDLING, SHIPPING, INSTALLING & BRACING OF TRUSSES. DESIGN CONFORMS WITH APPLICABLE PROVISIONS OF NDS (NATIONAL DESIGN SPEC. BY AF&PA) AND TPI. ALPINE CONNECTOR PLATES ARE MADE OF 20/18/16GA (W,H/S/K) ASTM A653 GRADE 40/60 (W, K/H,S) GALV. STEEL. APPLY PLATES TO EACH FACE OF TRUSS AND, UNLESS OTHERWISE LOCATED ON THIS DESIGN, POSITION PER DRAWINGS 160A-Z. ANY INSPECTION OF PLATES FOLLOWED BY (I) SHALL BE PER ANNEX A3 OF TPI1-2002 SEC.3. A SEAL ON THIS DRAWING INDICATES ACCEPTANCE OF PROFESSIONAL ENGINEERING RESPONSIBILITY SOLELY FOR THE TRUSS COMPONENT DESIGN SHOWN. THE SUITABILITY AND USE OF THIS COMPONENT FOR ANY BUILDING IS THE RESPONSIBILITY OF THE

ARTHUR R. FISHER
LICENSE
No. 59687
Sep 02, '05
STATE OF FLORIDA
PROFESSIONAL ENGINEER

TC LL	20.0 PSF	REF R487-- 33409
TC DL	10.0 PSF	DATE 09/02/05
BC DL	10.0 PSF	DRW HCUSR487 05245161
BC LL	0.0 PSF	HC-ENG JB/AF
TOT.LD.	40.0 PSF	SEQN- 27265
DUR.FAC.	1.25	
SPACING	24.0"	IREF 1S05487.704

(5 392 JONATHON PERRY / LOT 16 PHASE II STONEHANGE - EJ7)

DWG ED FRO UTER LOADS ENSION MITTE USS M

Top chord 2x4 SP #2 Dense
Bot chord 2x4 SP #2 Dense

Deflection meets L/360 live and L/240 total load.

110 mph wind, 9.60 ft mean hgt, ASCE 7-98, CLOSED bldg, not located within 4.50 ft from roof edge, CAT II, EXP B, wind TC DL=5.0 psf, wind BC DL=5.0 psf.

Provide (2) 16d common nails(0.162"x3.5"), toe nailed at Top chord.
Provide (2) 16d common nails(0.162"x3.5"), toe nailed at Bot chord.

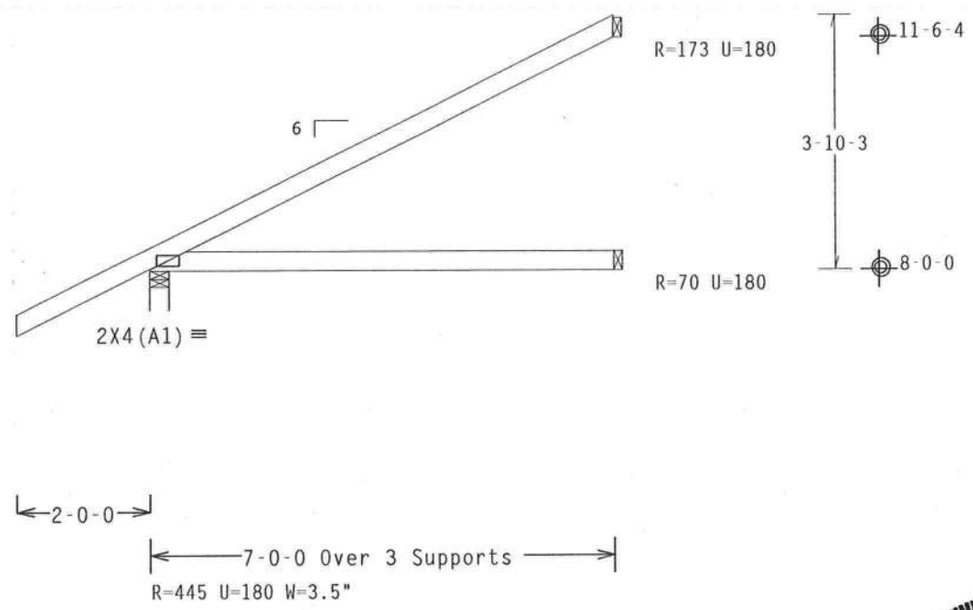

PLT TYP. Wave TPI | Design Crit: TPI-1995(STD)/FBC | 7.04 | 08/5.16 | QTY.18 | FL/-/3/-/-/R/- | Scale =.375"/Ft.

ALPINE
Alpine Engineered Products, Inc.
1950 Marley Drive

WARNING TRUSSES REQUIRE EXTREME CARE IN FABRICATION, HANDLING, SHIPPING, INSTALLING AND BRACING. REFER TO BCSI 1-03 (BUILDING COMPONENT SAFETY INFORMATION), PUBLISHED BY TPI (TRUSS PLATE INSTITUTE, 583 D'ONOFRIO DR., SUITE 200, MADISON, WI 53719) AND WTCA (WOOD TRUSS COUNCIL OF AMERICA, 6300 ENTERPRISE LN, MADISON, WI 53719) FOR SAFETY PRACTICES PRIOR TO PERFORMING THESE FUNCTIONS. UNLESS OTHERWISE INDICATED, TOP CHORD SHALL HAVE PROPERLY ATTACHED STRUCTURAL PANELS AND BOTTOM CHORD SHALL HAVE A PROPERLY ATTACHED RIGID CEILING.

IMPORTANTFURNISH A COPY OF THIS DESIGN TO THE INSTALLATION CONTRACTOR. ALPINE ENGINEERED PRODUCTS, INC. SHALL NOT BE RESPONSIBLE FOR ANY DEVIATION FROM THIS DESIGN; ANY FAILURE TO BUILD THE TRUSS IN CONFORMANCE WITH TPI; OR FABRICATING, HANDLING, SHIPPING, INSTALLING & BRACING OF TRUSSES. DESIGN CONFORMS WITH APPLICABLE PROVISIONS OF NDS (NATIONAL DESIGN SPEC. BY AF&PA) AND TPI. ALPINE CONNECTOR PLATES ARE MADE OF 20/18/16GA (W,H/S/K) ASTM A653 GRADE 40/60 (W, K/H,S) GALV. STEEL. APPLY PLATES TO EACH FACE OF TRUSS AND, UNLESS OTHERWISE LOCATED ON THIS DESIGN, POSITION PER DRAWINGS 160A-Z. ANY INSPECTION OF PLATES FOLLOWED BY (I) SHALL BE PER ANNEX A3 OF TPI1-2002 SEC.3. A SEAL ON THIS DRAWING INDICATES ACCEPTANCE OF PROFESSIONAL ENGINEERING RESPONSIBILITY SOLELY FOR THE TRUSS COMPONENT DESIGN SHOWN. THE SUITABILITY AND USE OF THIS COMPONENT FOR ANY BUILDING IS THE RESPONSIBILITY OF THE

ARTHUR R. FISHER
LICENSE
No. 59687
STATE OF FLORIDA
PROFESSIONAL ENGINEER

C LL	20.0 PSF	REF R487-- 33410
C DL	10.0 PSF	DATE 09/02/05
C DL	10.0 PSF	DRW HCUSR487 05245173
BC LL	0.0 PSF	HC-ENG GDL/AF
TOT.LD.	40.0 PSF	SEQN- 28848
DUR.FAC.	1.25	

Top chord 2x4 SP #2 Dense
Bot chord 2x4 SP #2 Dense

Deflection meets L/360 live and L/240 total load.

110 mph wind, 9.10 ft mean hgt, ASCE 7-98, CLOSED bldg, not located within 4.50 ft from roof edge, CAT II, EXP B, wind TC DL=5.0 psf, wind BC DL=5.0 psf.

Provide (2) 16d common nails(0.162"x3.5"), toe nailed at Top chord.
Provide (2) 16d common nails(0.162"x3.5"), toe nailed at Bot chord.

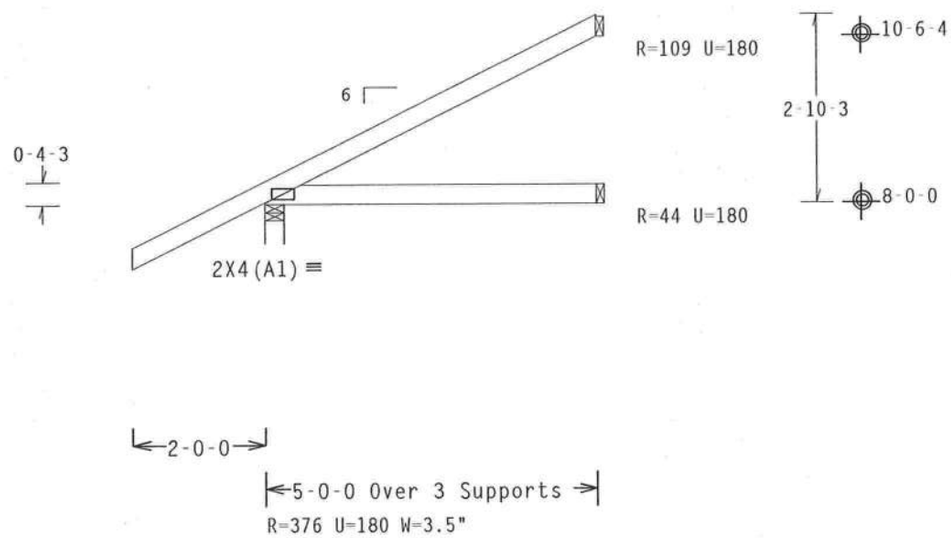

PLT TYP. Wave TPI | Design Crit: TPI-1995(STD)/FBC | 7.04.0303.16 | QTY:2 | FL/-/3/-/-/R/- | Scale =.375"/Ft.

ALPINE
Alpine Engineered Products, Inc.
1950 Marley Drive

WARNING TRUSSES REQUIRE EXTREME CARE IN FABRICATION, HANDLING, SHIPPING, INSTALLING AND BRACING. REFER TO BCSI 1-03 (BUILDING COMPONENT SAFETY INFORMATION), PUBLISHED BY TPI (TRUSS PLATE INSTITUTE, 583 D'ONOFRIO DR., SUITE 200, MADISON, WI 53719) AND WTCA (WOOD TRUSS COUNCIL OF AMERICA, 6300 ENTERPRISE LN, MADISON, WI 53719) FOR SAFETY PRACTICES PRIOR TO PERFORMING THESE FUNCTIONS. UNLESS OTHERWISE INDICATED, TOP CHORD SHALL HAVE PROPERLY ATTACHED STRUCTURAL PANELS AND BOTTOM CHORD SHALL HAVE A PROPERLY ATTACHED RIGID CEILING.

IMPORTANT FURNISH A COPY OF THIS DESIGN TO THE INSTALLATION CONTRACTOR. ALPINE ENGINEERED PRODUCTS, INC. SHALL NOT BE RESPONSIBLE FOR ANY DEVIATION FROM THIS DESIGN; ANY FAILURE TO BUILD THE TRUSS IN CONFORMANCE WITH TPI; OR FABRICATING, HANDLING, SHIPPING, INSTALLING & BRACING OF TRUSSES. DESIGN CONFORMS WITH APPLICABLE PROVISIONS OF NDS (NATIONAL DESIGN SPEC, BY AF&PA) AND TPI. ALPINE CONNECTOR PLATES ARE MADE OF 20/18/16GA (W,H/S/K) ASTM A653 GRADE 40/60 (W, K/H,S) GALV. STEEL. APPLY PLATES TO EACH FACE OF TRUSS AND, UNLESS OTHERWISE LOCATED ON THIS DESIGN, POSITION PER DRAWINGS 160A-Z. ANY INSPECTION OF PLATES FOLLOWED BY (1) SHALL BE PER ANNEX A3 OF TPI1-2002 SEC.3. A SEAL ON THIS DRAWING INDICATES ACCEPTANCE OF PROFESSIONAL ENGINEERING RESPONSIBILITY SOLELY FOR THE TRUSS COMPONENT DESIGN SHOWN. THE SUITABILITY AND USE OF THIS COMPONENT FOR ANY BUILDING IS THE RESPONSIBILITY OF THE

ARTHUR R. FISHER
LICENSE
No.59687
STATE OF FLORIDA
PROFESSIONAL ENGINEER

TC LL	20.0 PSF	REF R487-- 33411
TC DL	10.0 PSF	DATE 09/02/05
BC DL	10.0 PSF	DRW HCUSR487 05245152
BC LL	0.0 PSF	HC-ENG JB/AF
TOT.LD.	40.0 PSF	SEQN- 27295
DUR.FAC.	1.25	

DWG F D FRO TER I LOADS NSION MITTED USS M

(5-392-JONATHON PERRY / LOT 18 PHASE II STONEHANGE - HJ7)

Top chord 2x4 SP #2 Dense
Bot chord 2x4 SP #2 Dense
Webs 2x4 SP #3

Hipjack supports 7-0-0 setback jacks with no webs.

Provide (2) 16d common nails(0.162"x3.5"), toe nailed at Top chord.
Provide (3) 16d common nails(0.162"x3.5"), toe nailed at Bot chord.

110 mph wind, 15.00 ft mean hgt, ASCE 7-98, CLOSED bldg, Located anywhere in roof, CAT II, EXP B, wind TC DL=5.0 psf, wind BC DL=5.0 psf.

Deflection meets L/360 live and L/240 total load.

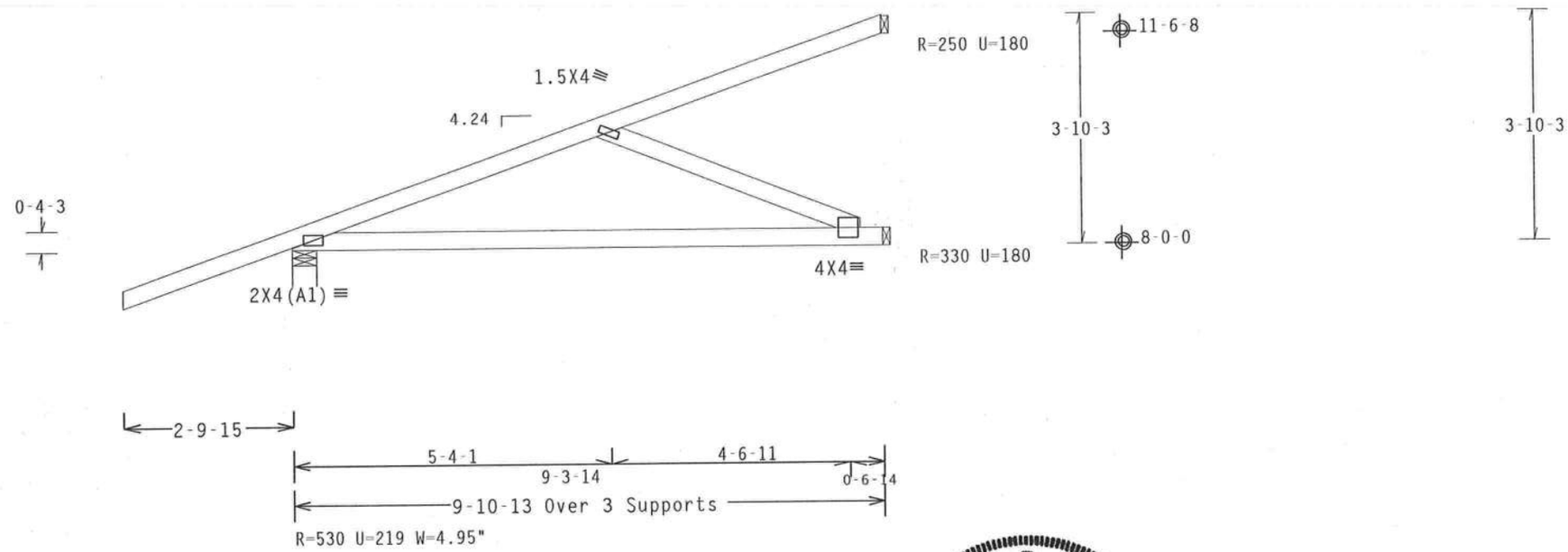

PLT TYP. Wave TPI

Design Crit: TPI-1995(STD)/FBC 7.04.0805.16 01.01

ALPINE
Alpine Engineered Products, Inc
1950 Marley Drive

WARNING TRUSSES REQUIRE EXTREME CARE IN FABRICATION, HANDLING, SHIPPING, INSTALLING AND BRACING. REFER TO BCSI 1-03 (BUILDING COMPONENT SAFETY INFORMATION), PUBLISHED BY TPI (TRUSS PLATE INSTITUTE, 583 D'ONOFRIO DR., SUITE 200, MADISON, WI 53719) AND WTCA (WOOD TRUSS COUNCIL OF AMERICA, 6300 ENTERPRISE LN, MADISON, WI 53719) FOR SAFETY PRACTICES PRIOR TO PERFORMING THESE FUNCTIONS. UNLESS OTHERWISE INDICATED, TOP CHORD SHALL HAVE PROPERLY ATTACHED STRUCTURAL PANELS AND BOTTOM CHORD SHALL HAVE A PROPERLY ATTACHED RIGID CEILING.

IMPORTANT FURNISH A COPY OF THIS DESIGN TO THE INSTALLATION CONTRACTOR. ALPINE ENGINEERED PRODUCTS, INC. SHALL NOT BE RESPONSIBLE FOR ANY DEVIATION FROM THIS DESIGN; ANY FAILURE TO BUILD THE TRUSS IN CONFORMANCE WITH TPI; OR FABRICATING, HANDLING, SHIPPING, INSTALLING & BRACING OF TRUSSES. DESIGN CONFORMS WITH APPLICABLE PROVISIONS OF NDS (NATIONAL DESIGN SPEC. BY AF&PA) AND TPI. ALPINE CONNECTOR PLATES ARE MADE OF 20/18/16GA (W,H/S/K) ASTM A653 GRADE 40/60 (W, K/H,S) GALV. STEEL. APPLY PLATES TO EACH FACE OF TRUSS AND, UNLESS OTHERWISE LOCATED ON THIS DESIGN, POSITION PER DRAWINGS 160A-Z. ANY INSPECTION OF PLATES FOLLOWED BY (1) SHALL BE PER ANNEX A3 OF TPI1-2002 SEC.3. A SEAL ON THIS DRAWING INDICATES ACCEPTANCE OF PROFESSIONAL ENGINEERING RESPONSIBILITY SOLELY FOR THE TRUSS COMPONENT DESIGN SHOWN. THE SUITABILITY AND USE OF THIS COMPONENT FOR ANY BUILDING IS THE RESPONSIBILITY OF THE

ARTHUR R. FISHER
LICENSE
No. 59687
STATE OF FLORIDA
PROFESSIONAL ENGINEER

FL/-/3/-/-/R/-		Scale =.375"/Ft.
C LL	20.0 PSF	REF R487-- 33412
C DL	10.0 PSF	DATE 09/02/05
BC DL	10.0 PSF	DRW HCUSR487 05245151
BC LL	0.0 PSF	HC-ENG DF/AF
TOT.LD.	40.0 PSF	SEQN- 4941
DUR.FAC.	1.25	

DWG D FROM COMPUTER INPUT. LOADS & DIMENSIONS SUBMITTED BY TRUSS MF

(5-392-JONATHON PERRY / LOT 18 PHASE II STONEHANGE - CJ3)

Top chord 2x4 SP #2 Dense
Bot chord 2x4 SP #2 Dense

Deflection meets L/360 live and L/240 total load.

110 mph wind, 8.60 ft mean hgt, ASCE 7-98, CLOSED bldg, Located anywhere in roof, CAT II, EXP B, wind TC DL=5.0 psf, wind BC DL=5.0 psf.

Provide (2) 16d common nails(0.162"x3.5"), toe nailed at Top chord.
Provide (2) 16d common nails(0.162"x3.5"), toe nailed at Bot chord.

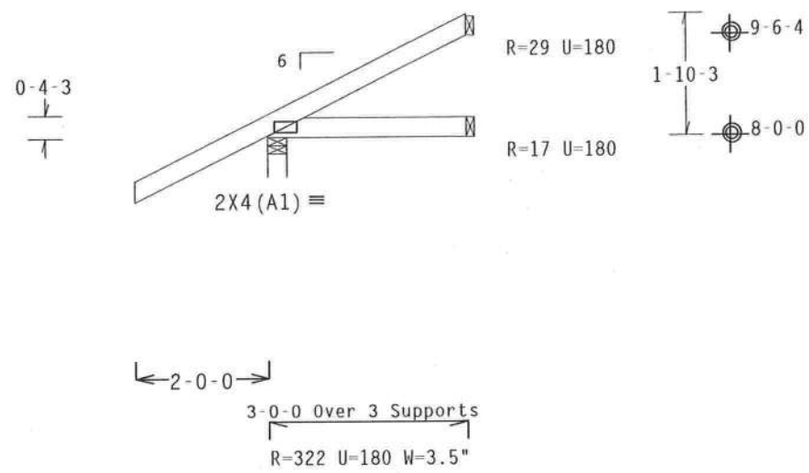

PLT TYP. Wave TPI | Design Crit: TPI-1995(STD)/FBC | 7.04.0805.16 | QTY:2 | FL/-/3/-/-/R/- | Scale =.375"/Ft.

ALPINE
Alpine Engineered Products, Inc.
1950 Marley Drive

WARNING TRUSSES REQUIRE EXTREME CARE IN FABRICATION, HANDLING, SHIPPING, INSTALLING AND BRACING. REFER TO BCSI 1-03 (BUILDING COMPONENT SAFETY INFORMATION), PUBLISHED BY TPI (TRUSS PLATE INSTITUTE, 583 D'ONOFRIO DR., SUITE 200, MADISON, WI 53719) AND WTCA (WOOD TRUSS COUNCIL OF AMERICA, 6300 ENTERPRISE LN, MADISON, WI 53719) FOR SAFETY PRACTICES PRIOR TO PERFORMING THESE FUNCTIONS. UNLESS OTHERWISE INDICATED, TOP CHORD SHALL HAVE PROPERLY ATTACHED STRUCTURAL PANELS AND BOTTOM CHORD SHALL HAVE A PROPERLY ATTACHED RIGID CEILING.

IMPORTANTFURNISH A COPY OF THIS DESIGN TO THE INSTALLATION CONTRACTOR. ALPINE ENGINEERED PRODUCTS, INC. SHALL NOT BE RESPONSIBLE FOR ANY DEVIATION FROM THIS DESIGN; ANY FAILURE TO BUILD THE TRUSS IN CONFORMANCE WITH TPI; OR FABRICATING, HANDLING, SHIPPING, INSTALLING & BRACING OF TRUSSES. DESIGN CONFORMS WITH APPLICABLE PROVISIONS OF NDS (NATIONAL DESIGN SPEC. BY AF&PA) AND TPI. ALPINE CONNECTOR PLATES ARE MADE OF 20/18/16GA (M,H/S/K) ASTM A653 GRADE 40/60 (M, K/H,S) GALV. STEEL. APPLY PLATES TO EACH FACE OF TRUSS AND, UNLESS OTHERWISE LOCATED ON THIS DESIGN, POSITION PER DRAWINGS 160A-Z. ANY INSPECTION OF PLATES FOLLOWED BY (1) SHALL BE PER ANNEX A3 OF TPI1-2002 SEC.3. A SEAL ON THIS DRAWING INDICATES ACCEPTANCE OF PROFESSIONAL ENGINEERING RESPONSIBILITY SOLELY FOR THE TRUSS COMPONENT DESIGN SHOWN. THE SUITABILITY AND USE OF THIS COMPONENT FOR ANY BUILDING IS THE RESPONSIBILITY OF THE

ARTHUR R. FISHER
LICENSE
No. 59687
STATE OF FLORIDA
PROFESSIONAL ENGINEER

TC LL	20.0 PSF	REF R487-- 33413
TC DL	10.0 PSF	DATE 09/02/05
BC DL	10.0 PSF	DRW HCUSR487 05245153
BC LL	0.0 PSF	HC-ENG JB/AF
TOT.LD.	40.0 PSF	SEQN- 27296
DUR.FAC.	1.25	

THIS DWG RECEIVED FROM COMPUTER INPUT LOADS & DIMENSIONS SUBMITTED BY TRUSS MFR

(5-392-JONATHON PERRY / LOT 18 PHASE II STONEHANGE - CJ1)

Top chord 2x4 SP #2 Dense
Bot chord 2x4 SP #2 Dense

110 mph wind, 8.10 ft mean hgt, ASCE 7-98, CLOSED bldg, Located anywhere in roof, CAT II, EXP B, wind TC DL=5.0 psf, wind BC DL=5.0 psf.

Deflection meets L/360 live and L/240 total load.

Provide (2) 16d common nails(0.162"x3.5"), toe nailed at Top chord.
Provide (2) 16d common nails(0.162"x3.5"), toe nailed at Bot chord.

* PROVIDE CONNECTION FOR 191# UP OR DOWN AT A 1.25 DURATION FACTOR.

R=-191 U= *

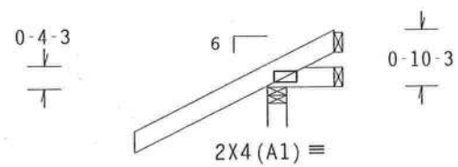

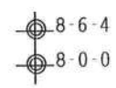

R=-19 U=180

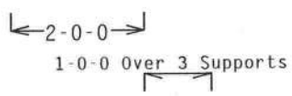

R=418 U=180 W=3.5"

PLT TYP. Wave TPI Design Crit: TPI-1995(STD)/FBC 7.04.6805.16 QTY:6 EL/-/3/-/-/R/- Scale =.375"/Ft.

ALPINE
Alpine Engineered Products, Inc
1950 Marley Drive

WARNING TRUSSES REQUIRE EXTREME CARE IN FABRICATION, HANDLING, SHIPPING, INSTALLING AND BRACING. REFER TO BCSI 1-03 (BUILDING COMPONENT SAFETY INFORMATION), PUBLISHED BY TPI (TRUSS PLATE INSTITUTE, 583 D'ONOFRIO DR., SUITE 200, MADISON, WI 53719) AND WTCA (WOOD TRUSS COUNCIL OF AMERICA, 6300 ENTERPRISE LN, MADISON, WI 53719) FOR SAFETY PRACTICES PRIOR TO PERFORMING THESE FUNCTIONS. UNLESS OTHERWISE INDICATED, TOP CHORD SHALL HAVE PROPERLY ATTACHED STRUCTURAL PANELS AND BOTTOM CHORD SHALL HAVE A PROPERLY ATTACHED RIGID CEILING.

IMPORTANT FURNISH A COPY OF THIS DESIGN TO THE INSTALLATION CONTRACTOR. ALPINE ENGINEERED PRODUCTS, INC. SHALL NOT BE RESPONSIBLE FOR ANY DEVIATION FROM THIS DESIGN; ANY FAILURE TO BUILD THE TRUSS IN CONFORMANCE WITH TPI: OR FABRICATING, HANDLING, SHIPPING, INSTALLING & BRACING OF TRUSSES. DESIGN CONFORMS WITH APPLICABLE PROVISIONS OF NDS (NATIONAL DESIGN SPEC. BY AF&PA) AND TPI. ALPINE CONNECTOR PLATES ARE MADE OF 20/18/16GA (W,H/S/K) ASTM A653 GRADE 40/60 (W, K/H,S) GALV. STEEL. APPLY PLATES TO EACH FACE OF TRUSS AND. UNLESS OTHERWISE LOCATED ON THIS DESIGN, POSITION PER DRAWINGS 160A-Z. ANY INSPECTION OF PLATES FOLLOWED BY (1) SHALL BE PER ANNEX A3 OF TPI1-2002 SEC.3. A SEAL ON THIS DRAWING INDICATES ACCEPTANCE OF PROFESSIONAL ENGINEERING RESPONSIBILITY SOLELY FOR THE TRUSS COMPONENT DESIGN SHOWN. THE SUITABILITY AND USE OF THIS COMPONENT FOR ANY BUILDING IS THE RESPONSIBILITY OF THE

ARTHUR R. FISHER
LICENSE
No. 59687
STATE OF FLORIDA
PROFESSIONAL ENGINEER

TC LL	20.0 PSF	REF R487-- 33414
TC DL	10.0 PSF	DATE 09/02/05
BC DL	10.0 PSF	DRW HCUSR487 05245132
BC LL	0.0 PSF	HC-ENG JB/AF
TOT.LD.	40.0 PSF	SEQN- 27272
DUR.FAC.	1.25	

(5-392-JONATHON PERRY / LOT 18 PHASE II STONEHANGE - HJ71)

Top chord 2x4 SP #2 Dense
Bot chord 2x4 SP #2 Dense
Webs 2x4 SP #3 :W1 2x4 SP #2 Dense:

Hipjack supports 7-0-0 setback jacks with no webs.

Provide (2) 16d common nails(0.162"x3.5"), toe nailed at Top chord.
Provide (3) 16d common nails(0.162"x3.5"), toe nailed at Bot chord.

110 mph wind, 15.00 ft mean hgt, ASCE 7-98, CLOSED bldg, Located anywhere in roof, CAT II, EXP B, wind TC DL=5.0 psf, wind BC DL=5.0 psf.

Deflection meets L/360 live and L/240 total load.

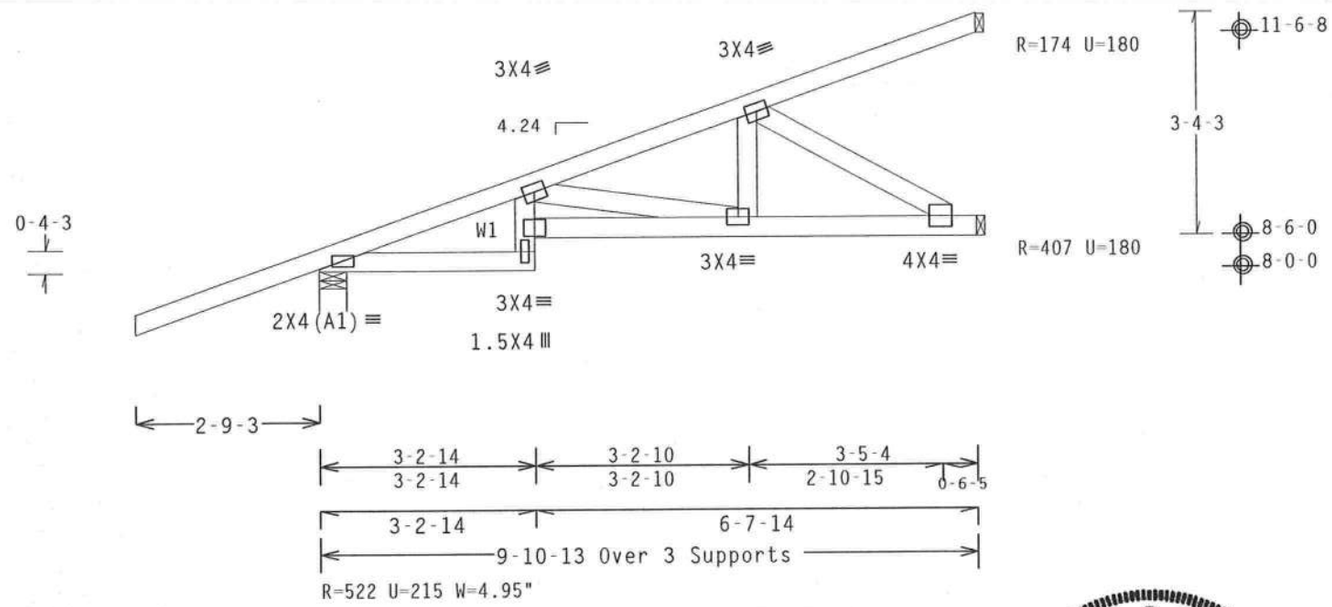

PLT TYP. Wave TPI | Design Crit: TPI-1995(STD)/FBC | 7.04.0805.16 | QTY:2 | FL/-/3/-/-/R/- | Scale =.375"/Ft.

ALPINE
Alpine Engineered Products, Inc.
1950 Marley Drive

WARNING TRUSSES REQUIRE EXTREME CARE IN FABRICATION, HANDLING, SHIPPING, INSTALLING AND BRACING. REFER TO BCSI 1-03 (BUILDING COMPONENT SAFETY INFORMATION), PUBLISHED BY TPI (TRUSS PLATE INSTITUTE, 583 D'ONOFRIO DR., SUITE 200, MADISON, WI 53719) AND WTCA (WOOD TRUSS COUNCIL OF AMERICA, 6300 ENTERPRISE LN, MADISON, WI 53719) FOR SAFETY PRACTICES PRIOR TO PERFORMING THESE FUNCTIONS. UNLESS OTHERWISE INDICATED, TOP CHORD SHALL HAVE PROPERLY ATTACHED STRUCTURAL PANELS AND BOTTOM CHORD SHALL HAVE A PROPERLY ATTACHED RIGID CEILING.

IMPORTANT FURNISH A COPY OF THIS DESIGN TO THE INSTALLATION CONTRACTOR. ALPINE ENGINEERED PRODUCTS, INC. SHALL NOT BE RESPONSIBLE FOR ANY DEVIATION FROM THIS DESIGN; ANY FAILURE TO BUILD THE TRUSS IN CONFORMANCE WITH TPI; OR FABRICATING, HANDLING, SHIPPING, INSTALLING & BRACING OF TRUSSES. DESIGN CONFORMS WITH APPLICABLE PROVISIONS OF NDS (NATIONAL DESIGN SPEC. BY AFPA) AND TPI. ALPINE CONNECTOR PLATES ARE MADE OF 20/18/16GA (W,H/S/K) ASTM A653 GRADE 40/60 (W, K/H,S) GALV. STEEL. APPLY PLATES TO EACH FACE OF TRUSS AND, UNLESS OTHERWISE LOCATED ON THIS DESIGN, POSITION PER DRAWINGS 160A-Z. ANY INSPECTION OF PLATES FOLLOWED BY (1) SHALL BE PER ANNEX A3 OF TP11-2002 SEC.3. A SEAL ON THIS DRAWING INDICATES ACCEPTANCE OF PROFESSIONAL ENGINEERING RESPONSIBILITY SOLELY FOR THE TRUSS COMPONENT DESIGN SHOWN. THE SUITABILITY AND USE OF THIS COMPONENT FOR ANY BUILDING IS THE RESPONSIBILITY OF THE

ARTHUR R. FISHER
LICENSE
No. 59687
STATE OF FLORIDA
PROFESSIONAL ENGINEER
SEP 02 '05

TC LL	20.0 PSF	REF R487-- 33415
TC DL	10.0 PSF	DATE 09/02/05
BC DL	10.0 PSF	DRW HCUSR487 05245129
BC LL	0.0 PSF	HC-ENG DF/AF
TOT.LD.	40.0 PSF	SEQN- 4902
DUR.FAC.	1.25	

(5-392-JONATHON PERRY / LOT 18 PHASE II STONEHANGE - COST)

Top chord 2x4 SP #2 Dense
Bot chord 2x4 SP #2 Dense
Webs 2x4 SP #3

Deflection meets L/360 live and L/240 total load.

110 mph wind, 9.10 ft mean hgt, ASCE 7-98, CLOSED bldg, not located within 4.50 ft from roof edge, CAT II, EXP B, wind TC DL=5.0 psf, wind BC DL=5.0 psf.

Provide (2) 16d common nails(0.162"x3.5"), toe nailed at Top chord.
Provide (2) 16d common nails(0.162"x3.5"), toe nailed at Bot chord.

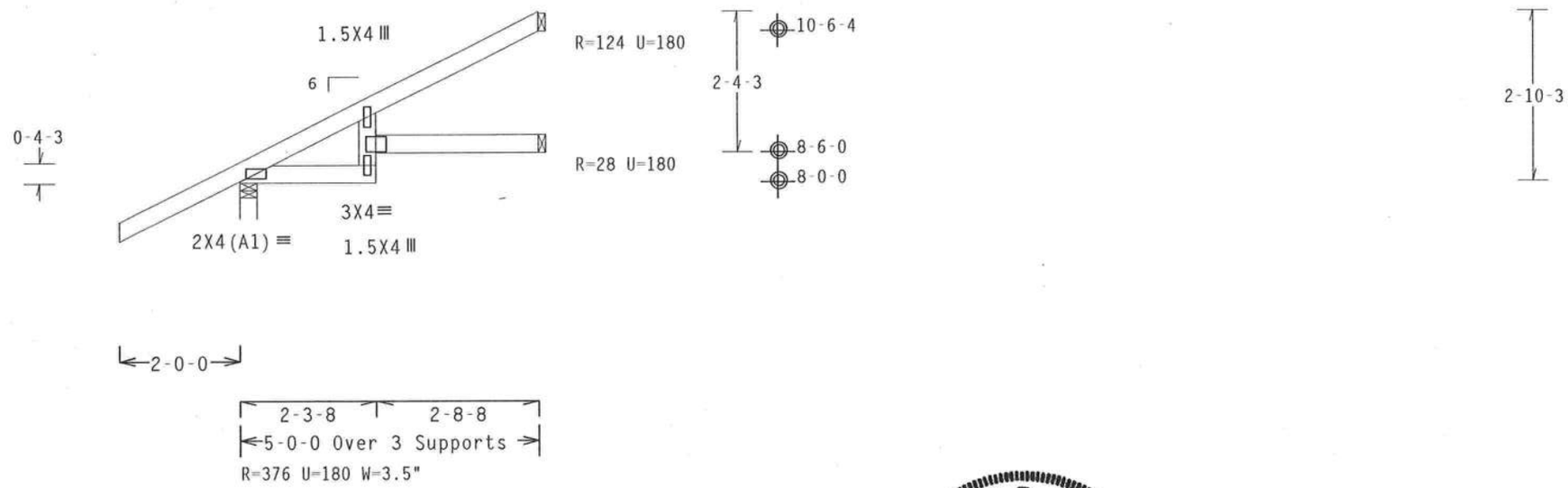

PLT TYP. Wave TPI | Design Crit: TPI-1995(STD)/FBC | 7.04.0805.16 | Q13:4 | FL/-/3/-/-/R/- | Scale =.375"/Ft.

ALPINE
Alpine Engineered Products, Inc.
1950 Marley Drive

WARNING TRUSSES REQUIRE EXTREME CARE IN FABRICATION, HANDLING, SHIPPING, INSTALLING AND BRACING. REFER TO BCSI 1-03 (BUILDING COMPONENT SAFETY INFORMATION), PUBLISHED BY TPI (TRUSS PLATE INSTITUTE, 583 D'ONOFRIO DR., SUITE 200, MADISON, WI 53719) AND WTCA (WOOD TRUSS COUNCIL OF AMERICA, 6300 ENTERPRISE LN. MADISON, WI 53719) FOR SAFETY PRACTICES PRIOR TO PERFORMING THESE FUNCTIONS. UNLESS OTHERWISE INDICATED, TOP CHORD SHALL HAVE PROPERLY ATTACHED STRUCTURAL PANELS AND BOTTOM CHORD SHALL HAVE A PROPERLY ATTACHED RIGID CEILING.

IMPORTANT FURNISH A COPY OF THIS DESIGN TO THE INSTALLATION CONTRACTOR. ALPINE ENGINEERED PRODUCTS, INC. SHALL NOT BE RESPONSIBLE FOR ANY DEVIATION FROM THIS DESIGN; ANY FAILURE TO BUILD THE TRUSS IN CONFORMANCE WITH TPI; OR FABRICATING, HANDLING, SHIPPING, INSTALLING & BRACING OF TRUSSES. DESIGN CONFORMS WITH APPLICABLE PROVISIONS OF NDS (NATIONAL DESIGN SPEC. BY AF&PA) AND TPI. ALPINE CONNECTOR PLATES ARE MADE OF 20/18/16GA (W,H/S/K) ASTM A653 GRADE 40/60 (W, K/H,S) GALV. STEEL. APPLY PLATES TO EACH FACE OF TRUSS AND, UNLESS OTHERWISE LOCATED ON THIS DESIGN, POSITION PER DRAWINGS 160A-Z. ANY INSPECTION OF PLATES FOLLOWED BY (1) SHALL BE PER ANNEX A3 OF TPI1-2002 SEC.3. A SEAL ON THIS DRAWING INDICATES ACCEPTANCE OF PROFESSIONAL ENGINEERING RESPONSIBILITY SOLELY FOR THE TRUSS COMPONENT DESIGN SHOWN. THE SUITABILITY AND USE OF THIS COMPONENT FOR ANY BUILDING IS THE RESPONSIBILITY OF THE

ARTHUR R. FISHER
LICENSE
No. 59687
STATE OF FLORIDA
PROFESSIONAL ENGINEER

TC LL	20.0 PSF	REF R487-- 33416
TC DL	10.0 PSF	DATE 09/02/05
BC DL	10.0 PSF	DRW HCUSR487 05245138
BC LL	0.0 PSF	HC-ENG JB/AF *
TOT.LD.	40.0 PSF	SEQN- 27280
DUR.FAC.	1.25	

(5-392-JONATHON PERRY / LOT 18-PHASE II STONEHAVEN - EJ7)

THIS DWG PREPARED FROM COMPUTER INPUT (LOADS & DIMENSIONS) SUBMITTED BY TRUSS MFR

Top chord 2x4 SP #2 Dense
Bot chord 2x4 SP #2 Dense
Webs 2x4 SP #3

Deflection meets L/360 live and L/240 total load.

110 mph wind, 9.60 ft mean hgt, ASCE 7-98, CLOSED bldg, not located within 4.50 ft from roof edge, CAT II, EXP B, wind TC DL=5.0 psf, wind BC DL=5.0 psf.

Provide (2) 16d common nails(0.162"x3.5"), toe nailed at Top chord.
Provide (2) 16d common nails(0.162"x3.5"), toe nailed at Bot chord.

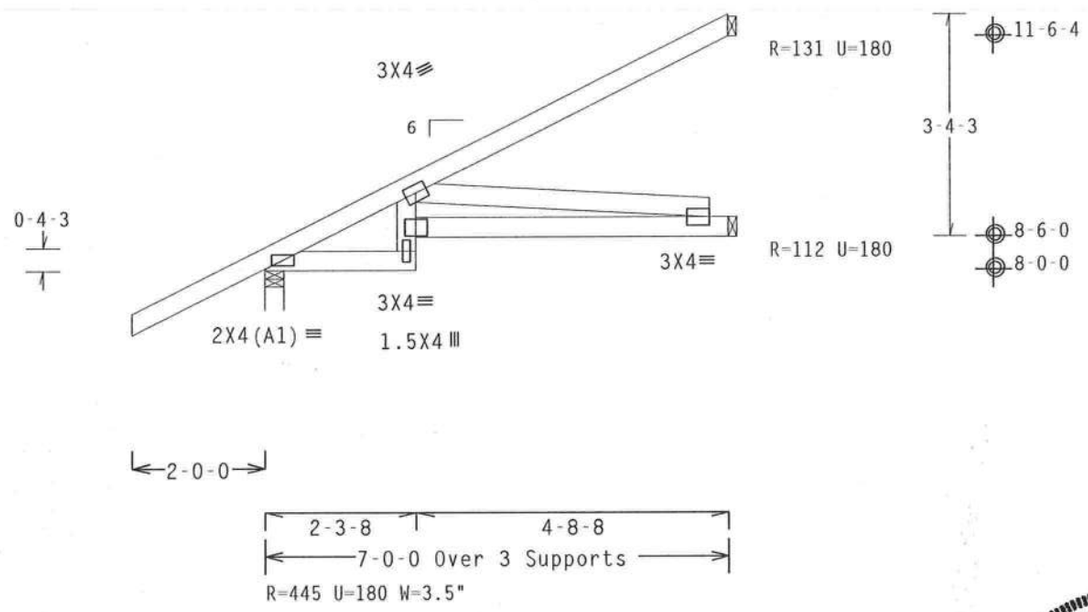

PLT TYP. Wave TPI | Design Crit: TPI-1995(STD)/FBC | 7.04.0808.16 | QTY:3 | FL/-/3/-/-/R/- | Scale =.375"/Ft.

ALPINE
Alpine Engineered Products, Inc.
1950 Marley Drive

WARNING TRUSSES REQUIRE EXTREME CARE IN FABRICATION, HANDLING, SHIPPING, INSTALLING AND BRACING. REFER TO BCSI 1-03 (BUILDING COMPONENT SAFETY INFORMATION), PUBLISHED BY TPI (TRUSS PLATE INSTITUTE, 583 D'ONOFRIO DR., SUITE 200, MADISON, WI 53719) AND WTCA (WOOD TRUSS COUNCIL OF AMERICA, 6300 ENTERPRISE LN, MADISON, WI 53719) FOR SAFETY PRACTICES PRIOR TO PERFORMING THESE FUNCTIONS. UNLESS OTHERWISE INDICATED, TOP CHORD SHALL HAVE PROPERLY ATTACHED STRUCTURAL PANELS AND BOTTOM CHORD SHALL HAVE A PROPERLY ATTACHED RIGID CEILING.

IMPORTANT FURNISH A COPY OF THIS DESIGN TO THE INSTALLATION CONTRACTOR. ALPINE ENGINEERED PRODUCTS, INC. SHALL NOT BE RESPONSIBLE FOR ANY DEVIATION FROM THIS DESIGN; ANY FAILURE TO BUILD THE TRUSS IN CONFORMANCE WITH TPI; OR FABRICATING, HANDLING, SHIPPING, INSTALLING & BRACING OF TRUSSES. DESIGN CONFORMS WITH APPLICABLE PROVISIONS OF NDS (NATIONAL DESIGN SPEC. BY AF&PA) AND TPI. ALPINE CONNECTOR PLATES ARE MADE OF 20/18/16GA (W,H/S/K) ASTM A653 GRADE 40/60 (W, K/H,S) GALV. STEEL. APPLY PLATES TO EACH FACE OF TRUSS AND, UNLESS OTHERWISE LOCATED ON THIS DESIGN, POSITION PER DRAWINGS 160A-Z. ANY INSPECTION OF PLATES FOLLOWED BY (1) SHALL BE PER ANNEX A3 OF TPI1-2002 SEC.3. A SEAL ON THIS DRAWING INDICATES ACCEPTANCE OF PROFESSIONAL ENGINEERING RESPONSIBILITY SOLELY FOR THE TRUSS COMPONENT DESIGN SHOWN. THE SUITABILITY AND USE OF THIS COMPONENT FOR ANY BUILDING IS THE RESPONSIBILITY OF THE

ARTHUR R. FISHER
LICENSE
No. 59687
STATE OF FLORIDA
PROFESSIONAL ENGINEER

TC LL	20.0 PSF	REF R487-- 33417
TC DL	10.0 PSF	DATE 09/02/05
BC DL	10.0 PSF	DRW HCUSR487 05245140
BC LL	0.0 PSF	HC-ENG JB/AF *
TOT.LD.	40.0 PSF	SEQN- 27282
DUR.FAC.	1.25	

(5-392-JONATHON PERRY / LOT 18 PHASE II STONEHANGE - CUST)

DWG [illegible] D FROM COMPUTER [illegible] LOADS [illegible] DIMENSIONS [illegible] MITTED [illegible] TRUSS M[illegible]

Top chord 2x4 SP #2 Dense
Bot chord 2x4 SP #2 Dense
Webs 2x4 SP #3

Deflection meets L/360 live and L/240 total load.

110 mph wind, 8.60 ft mean hgt, ASCE 7-98, CLOSED bldg, Located anywhere in roof, CAT II, EXP B, wind TC DL=5.0 psf, wind BC DL=5.0 psf.

Provide (2) 16d common nails(0.162"x3.5"), toe nailed at Top chord.
Provide (2) 16d common nails(0.162"x3.5"), toe nailed at Bot chord.

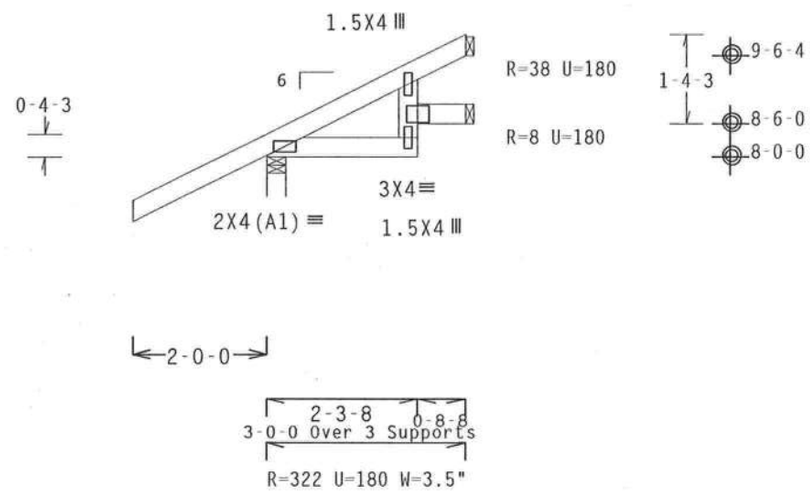

PLT TYP. Wave TPI | Design Crit: TPI-1995(STD)/FBC | 7.04.[illegible] | [illegible]OT 1:4 | FL/-/3/-/-/R/- | Scale =.375"/Ft.

ALPINE
Alpine Engineered Products, Inc.
1950 Marley Drive
Haines City, FL 33844

WARNING TRUSSES REQUIRE EXTREME CARE IN FABRICATION, HANDLING, SHIPPING, INSTALLING AND BRACING. REFER TO BCSI 1-03 (BUILDING COMPONENT SAFETY INFORMATION), PUBLISHED BY TPI (TRUSS PLATE INSTITUTE, 583 D'ONOFRIO DR., SUITE 200, MADISON, WI 53719) AND WTCA (WOOD TRUSS COUNCIL OF AMERICA, 6300 ENTERPRISE LN, MADISON, WI 53719) FOR SAFETY PRACTICES PRIOR TO PERFORMING THESE FUNCTIONS. UNLESS OTHERWISE INDICATED, TOP CHORD SHALL HAVE PROPERLY ATTACHED STRUCTURAL PANELS AND BOTTOM CHORD SHALL HAVE A PROPERLY ATTACHED RIGID CEILING.

IMPORTANT FURNISH A COPY OF THIS DESIGN TO THE INSTALLATION CONTRACTOR. ALPINE ENGINEERED PRODUCTS, INC. SHALL NOT BE RESPONSIBLE FOR ANY DEVIATION FROM THIS DESIGN; ANY FAILURE TO BUILD THE TRUSS IN CONFORMANCE WITH TPI: OR FABRICATING, HANDLING, SHIPPING, INSTALLING & BRACING OF TRUSSES. DESIGN CONFORMS WITH APPLICABLE PROVISIONS OF NDS (NATIONAL DESIGN SPEC. BY AF&PA) AND TPI. ALPINE CONNECTOR PLATES ARE MADE OF 20/18/16GA (W,H/S/K) ASTM A653 GRADE 40/60 (W, K/H,S) GALV. STEEL. APPLY PLATES TO EACH FACE OF TRUSS AND, UNLESS OTHERWISE LOCATED ON THIS DESIGN, POSITION PER DRAWINGS 160A-Z. ANY INSPECTION OF PLATES FOLLOWED BY (1) SHALL BE PER ANNEX A3 OF TPI1-2002 SEC.3. A SEAL ON THIS DRAWING INDICATES ACCEPTANCE OF PROFESSIONAL ENGINEERING RESPONSIBILITY SOLELY FOR THE TRUSS COMPONENT DESIGN SHOWN. THE SUITABILITY AND USE OF THIS COMPONENT FOR ANY BUILDING IS THE RESPONSIBILITY OF THE

ARTHUR R. FISHER
LICENSE
No. 59687
STATE OF FLORIDA
PROFESSIONAL ENGINEER
Sep 02 05

TC LL	20.0 PSF	REF R487-- 33418
TC DL	10.0 PSF	DATE 09/02/05
BC DL	10.0 PSF	DRW HCUSR487 05245131
BC LL	0.0 PSF	HC-ENG JB/AF *
TOT.LD.	40.0 PSF	SEQN- 27271
DUR.FAC.	1.25	

Top chord 2x4 SP #2 Dense
Bot chord 2x4 SP #2 Dense
Webs 2x4 SP #3

Deflection meets L/360 live and L/240 total load.

110 mph wind, 8.92 ft mean hgt, ASCE 7-98, CLOSED bldg, not located within 4.50 ft from roof edge, CAT II, EXP B, wind TC DL=5.0 psf, wind BC DL=5.0 psf.

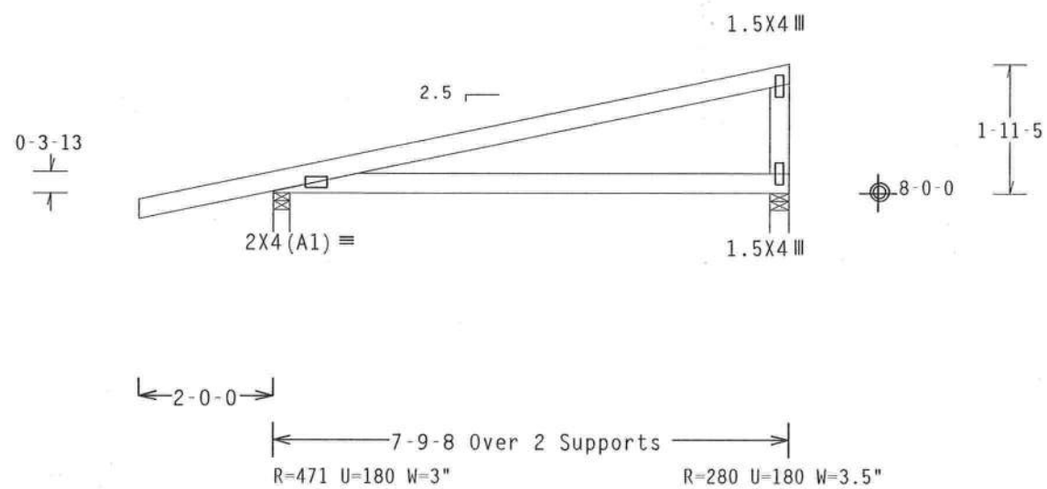

PLT TYP. Wave TPI | Design Crit: TPI-1995(STD)/FBC | 7.04.0805.16 | 01:5 | FL/-/3/-/-/R/- | Scale =.375"/Ft.

ALPINE
Alpine Engineered Products, Inc.
1950 Marley Drive
Haines City, FL 33844

WARNING TRUSSES REQUIRE EXTREME CARE IN FABRICATION, HANDLING, SHIPPING, INSTALLING AND BRACING. REFER TO BCSI 1-03 (BUILDING COMPONENT SAFETY INFORMATION), PUBLISHED BY TPI (TRUSS PLATE INSTITUTE, 583 D'ONOFRIO DR., SUITE 200, MADISON, WI 53719) AND WTCA (WOOD TRUSS COUNCIL OF AMERICA, 6300 ENTERPRISE LN, MADISON, WI 53719) FOR SAFETY PRACTICES PRIOR TO PERFORMING THESE FUNCTIONS. UNLESS OTHERWISE INDICATED, TOP CHORD SHALL HAVE PROPERLY ATTACHED STRUCTURAL PANELS AND BOTTOM CHORD SHALL HAVE A PROPERLY ATTACHED RIGID CEILING.

IMPORTANT FURNISH A COPY OF THIS DESIGN TO THE INSTALLATION CONTRACTOR. ALPINE ENGINEERED PRODUCTS, INC. SHALL NOT BE RESPONSIBLE FOR ANY DEVIATION FROM THIS DESIGN; ANY FAILURE TO BUILD THE TRUSS IN CONFORMANCE WITH TPI; OR FABRICATING, HANDLING, SHIPPING, INSTALLING & BRACING OF TRUSSES. DESIGN CONFORMS WITH APPLICABLE PROVISIONS OF NDS (NATIONAL DESIGN SPEC. BY AF&PA) AND TPI. ALPINE CONNECTOR PLATES ARE MADE OF 20/18/16GA (W,H/S/K) ASTM A653 GRADE 40/60 (W, K/H,S) GALV. STEEL. APPLY PLATES TO EACH FACE OF TRUSS AND, UNLESS OTHERWISE LOCATED ON THIS DESIGN, POSITION PER DRAWINGS 160A-Z. ANY INSPECTION OF PLATES FOLLOWED BY (1) SHALL BE PER ANNEX A3 OF TPI1-2002 SEC.3. A SEAL ON THIS DRAWING INDICATES ACCEPTANCE OF PROFESSIONAL ENGINEERING RESPONSIBILITY SOLELY FOR THE TRUSS COMPONENT DESIGN SHOWN. THE SUITABILITY AND USE OF THIS COMPONENT FOR ANY BUILDING IS THE RESPONSIBILITY OF THE BUILDING DESIGNER PER ANSI/TPI 1 SEC. 2.

ARTHUR R. FISHER
LICENSE
No. 59687
STATE OF FLORIDA
PROFESSIONAL ENGINEER

TC LL	20.0 PSF	REF	R487-- 33419
TC DL	10.0 PSF	DATE	09/02/05
BC DL	10.0 PSF	DRW	HCUSR487 05245139
BC LL	0.0 PSF	HC-ENG	JB/AF *
TOT.LD.	40.0 PSF	SEQN-	27281
DUR.FAC.	1.25		

(5-392-JONATHON PERRY / LOT 18 PHASE II STONEHANGE - M)

DWG GENERATED FROM COMPUTER INPUT LOADS & DIMENSIONS SUBMITTED BY TRUSS MFR

Top chord 2x4 SP #2 Dense
Bot chord 2x4 SP #2 Dense
Webs 2x4 SP #3

Deflection meets L/360 live and L/240 total load.

110 mph wind, 9.39 ft mean hgt, ASCE 7-98, CLOSED bldg, Located anywhere in roof, CAT II, EXP B, wind TC DL=5.0 psf, wind BC DL=5.0 psf.

Right end vertical not exposed to wind pressure.

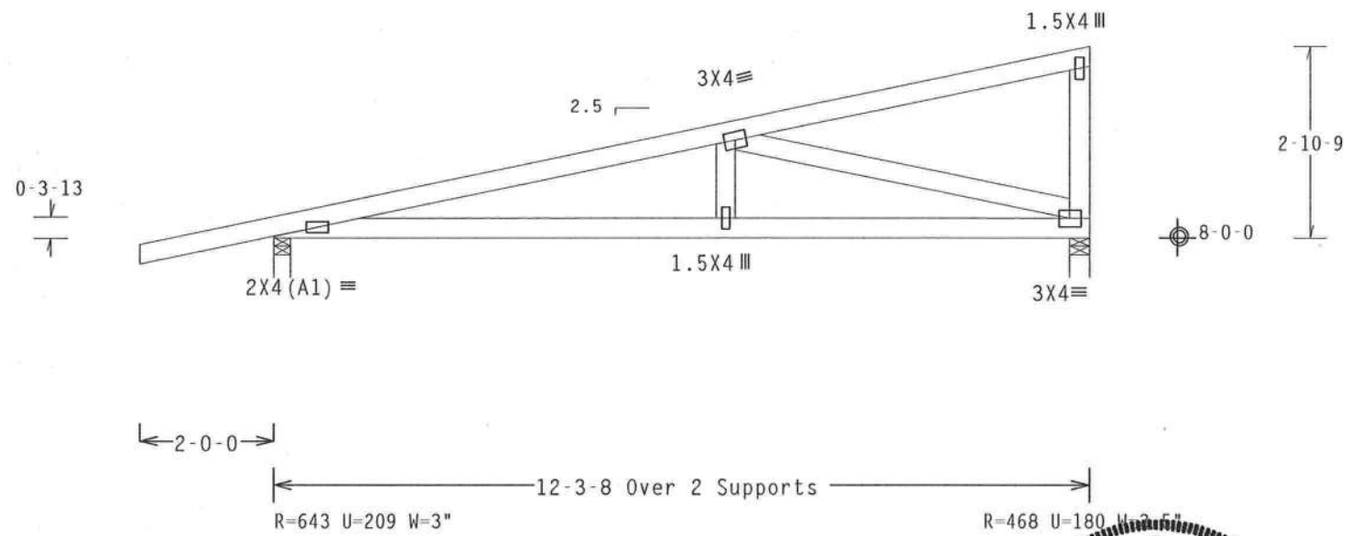

PLT TYP. Wave TPI | Design Crit: TPI-1995(STD)/FBC | 7.04.0305.16 | QTY 4 | FL/-/3/-/-/R/- | Scale =.375"/Ft.

ALPINE
Alpine Engineered Products, Inc.
1950 Marley Drive
Haines City, FL 33844

WARNING TRUSSES REQUIRE EXTREME CARE IN FABRICATION, HANDLING, SHIPPING, INSTALLING AND BRACING. REFER TO BCSI 1-03 (BUILDING COMPONENT SAFETY INFORMATION), PUBLISHED BY TPI (TRUSS PLATE INSTITUTE, 583 D'ONOFRIO DR., SUITE 200, MADISON, WI 53719) AND WTCA (WOOD TRUSS COUNCIL OF AMERICA, 6300 ENTERPRISE LN, MADISON, WI 53719) FOR SAFETY PRACTICES PRIOR TO PERFORMING THESE FUNCTIONS. UNLESS OTHERWISE INDICATED, TOP CHORD SHALL HAVE PROPERLY ATTACHED STRUCTURAL PANELS AND BOTTOM CHORD SHALL HAVE A PROPERLY ATTACHED RIGID CEILING.

IMPORTANTFURNISH A COPY OF THIS DESIGN TO THE INSTALLATION CONTRACTOR. ALPINE ENGINEERED PRODUCTS, INC. SHALL NOT BE RESPONSIBLE FOR ANY DEVIATION FROM THIS DESIGN; ANY FAILURE TO BUILD THE TRUSS IN CONFORMANCE WITH TPI; OR FABRICATING, HANDLING, SHIPPING, INSTALLING & BRACING OF TRUSSES. DESIGN CONFORMS WITH APPLICABLE PROVISIONS OF NDS (NATIONAL DESIGN SPEC. BY AF&PA) AND TPI. ALPINE CONNECTOR PLATES ARE MADE OF 20/18/16GA (W,H/S/K) ASTM A653 GRADE 40/60 (W, K/H,S) GALV. STEEL. APPLY PLATES TO EACH FACE OF TRUSS AND, UNLESS OTHERWISE LOCATED ON THIS DESIGN, POSITION PER DRAWINGS 160A-Z. ANY INSPECTION OF PLATES FOLLOWED BY (i) SHALL BE PER ANNEX A3 OF TPI1-2002 SEC.3. A SEAL ON THIS DRAWING INDICATES ACCEPTANCE OF PROFESSIONAL ENGINEERING RESPONSIBILITY SOLELY FOR THE TRUSS COMPONENT DESIGN SHOWN. THE SUITABILITY AND USE OF THIS COMPONENT FOR ANY BUILDING IS THE RESPONSIBILITY OF THE BUILDING DESIGNER PER ANSI/TPI 1 SEC. 2.

ARTHUR R. FISHER
LICENSE
No. 59687
STATE OF FLORIDA
PROFESSIONAL ENGINEER

TC LL	20.0 PSF	REF R487-- 33420
TC DL	10.0 PSF	DATE 09/02/05
BC DL	10.0 PSF	DRW HCUSR487 05245134
BC LL	0.0 PSF	HC-ENG JB/AF *
TOT.LD.	40.0 PSF	SEQN- 27276
DUR.FAC.	1.25	
SPACING	24.0"	JREF 1605487-704

(5-392-JONATHON PERRY / LOT 18 PHASE II STONEHANGE - MI)

Top chord 2x4 SP #2 Dense
Bot chord 2x4 SP #2 Dense
Webs 2x4 SP #3

Deflection meets L/360 live and L/240 total load.

110 mph wind, 9.08 ft mean hgt, ASCE 7-98, CLOSED bldg, not located within 4.50 ft from roof edge, CAT II, EXP B, wind TC DL=5.0 psf, wind BC DL=5.0 psf.

Right end vertical not exposed to wind pressure.

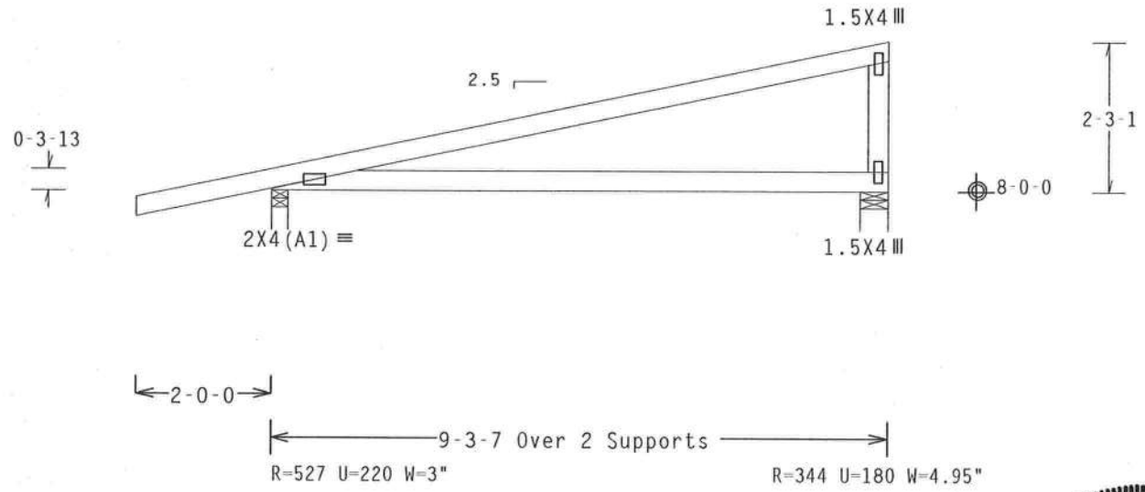

PLT TYP. Wave TPI | Design Crit: TPI-1995(STD)/FBC | 7.04 | 08/16 | 01:1

FL/-/3/-/-/R/-

TC LL	20.0 PSF	REF R487-- 33421
TC DL	10.0 PSF	DATE 09/02/05
BC DL	10.0 PSF	DRW HCUSR487 05245135
BC LL	0.0 PSF	HC-ENG JB/AF
TOT.LD.	40.0 PSF	SEQN- 27277
DUR.FAC.	1.25	

Scale =.375"/Ft.

ALPINE

Alpine Engineered Products, Inc
1950 Marley Drive
Haines City, FL 33844

WARNING TRUSSES REQUIRE EXTREME CARE IN FABRICATION, HANDLING, SHIPPING, INSTALLING AND BRACING. REFER TO BCSI 1-03 (BUILDING COMPONENT SAFETY INFORMATION), PUBLISHED BY TPI (TRUSS PLATE INSTITUTE, 583 D'ONOFRIO DR., SUITE 200, MADISON, WI 53719) AND WTCA (WOOD TRUSS COUNCIL OF AMERICA, 6300 ENTERPRISE LN, MADISON, WI 53719) FOR SAFETY PRACTICES PRIOR TO PERFORMING THESE FUNCTIONS. UNLESS OTHERWISE INDICATED, TOP CHORD SHALL HAVE PROPERLY ATTACHED STRUCTURAL PANELS AND BOTTOM CHORD SHALL HAVE A PROPERLY ATTACHED RIGID CEILING.

IMPORTANT FURNISH A COPY OF THIS DESIGN TO THE INSTALLATION CONTRACTOR. ALPINE ENGINEERED PRODUCTS, INC. SHALL NOT BE RESPONSIBLE FOR ANY DEVIATION FROM THIS DESIGN; ANY FAILURE TO BUILD THE TRUSS IN CONFORMANCE WITH TPI; OR FABRICATING, HANDLING, SHIPPING, INSTALLING & BRACING OF TRUSSES. DESIGN CONFORMS WITH APPLICABLE PROVISIONS OF NDS (NATIONAL DESIGN SPEC. BY AF&PA) AND TPI. ALPINE CONNECTOR PLATES ARE MADE OF 20/18/16GA (W,H/S/K) ASTM A653 GRADE 40/60 (W, K/H,S) GALV. STEEL. APPLY PLATES TO EACH FACE OF TRUSS AND, UNLESS OTHERWISE LOCATED ON THIS DESIGN, POSITION PER DRAWINGS 160A-Z. ANY INSPECTION OF PLATES FOLLOWED BY (1) SHALL BE PER ANNEX A3 OF TPI1-2002 SEC.3. A SEAL ON THIS DRAWING INDICATES ACCEPTANCE OF PROFESSIONAL ENGINEERING RESPONSIBILITY SOLELY FOR THE TRUSS COMPONENT DESIGN SHOWN. THE SUITABILITY AND USE OF THIS COMPONENT FOR ANY BUILDING IS THE RESPONSIBILITY OF THE BUILDING DESIGNER PER ANSI/TPI 1 SEC. 2.

ARTHUR R. FISHER
LICENSE
No. 59687
STATE OF FLORIDA
PROFESSIONAL ENGINEER

Top chord 2x4 SP #2 Dense
Bot chord 2x4 SP #2 Dense
Webs 2x4 SP #3

See DWGS A11015EC1103 & GBLLETIN0405 for more requirements.

Deflection meets L/360 live and L/240 total load.

110 mph wind, 9.21 ft mean hgt, ASCE 7-98, CLOSED bldg, Located anywhere in roof, CAT II, EXP B, wind TC DL=5.0 psf, wind BC DL=5.0 psf.

Right end vertical not exposed to wind pressure.

(**) Plate relocated as shown.

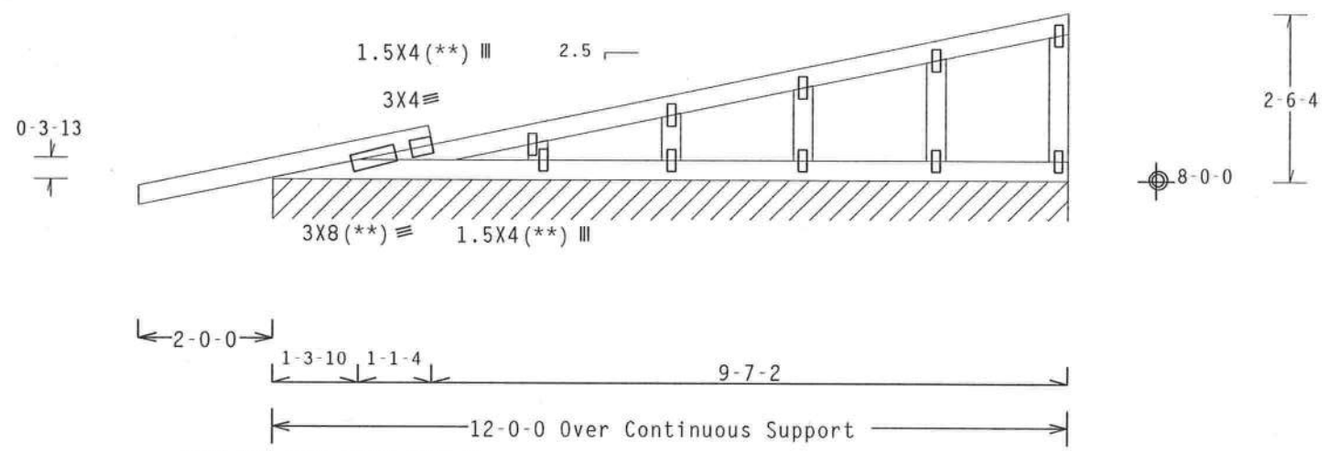

R=91 PLF U=26 PLF W=12-0-0

Note: All Plates Are 1.5X4 Except As Shown.

PLT TYP. Wave TPI Design Crit: TPI-1995(STD)/FBC 7.04.0805.16 01:1 FL/-/3/-/-/R/- Scale =.375"/Ft.

ALPINE
Alpine Engineered Products, Inc.
1950 Marley Drive
Haines City, FL 33844

WARNING TRUSSES REQUIRE EXTREME CARE IN FABRICATION, HANDLING, SHIPPING, INSTALLING AND BRACING. REFER TO BCSI 1-03 (BUILDING COMPONENT SAFETY INFORMATION), PUBLISHED BY TPI (TRUSS PLATE INSTITUTE, 583 D'ONOFRIO DR., SUITE 200, MADISON, WI 53719) AND WTCA (WOOD TRUSS COUNCIL OF AMERICA, 6300 ENTERPRISE LN, MADISON, WI 53719) FOR SAFETY PRACTICES PRIOR TO PERFORMING THESE FUNCTIONS. UNLESS OTHERWISE INDICATED, TOP CHORD SHALL HAVE PROPERLY ATTACHED STRUCTURAL PANELS AND BOTTOM CHORD SHALL HAVE A PROPERLY ATTACHED RIGID CEILING.

IMPORTANTFURNISH A COPY OF THIS DESIGN TO THE INSTALLATION CONTRACTOR. ALPINE ENGINEERED PRODUCTS, INC. SHALL NOT BE RESPONSIBLE FOR ANY DEVIATION FROM THIS DESIGN; ANY FAILURE TO BUILD THE TRUSS IN CONFORMANCE WITH TPI; OR FABRICATING, HANDLING, SHIPPING, INSTALLING & BRACING OF TRUSSES. DESIGN CONFORMS WITH APPLICABLE PROVISIONS OF NDS (NATIONAL DESIGN SPEC. BY AF&PA) AND TPI. ALPINE CONNECTOR PLATES ARE MADE OF 20/18/16GA (W,H/S/K) ASTM A653 GRADE 40/60 (W, K/H,S) GALV. STEEL. APPLY PLATES TO EACH FACE OF TRUSS AND, UNLESS OTHERWISE LOCATED ON THIS DESIGN, POSITION PER DRAWINGS 160A-Z. ANY INSPECTION OF PLATES FOLLOWED BY (1) SHALL BE PER ANNEX A3 OF TPI1-2002 SEC.3. A SEAL ON THIS DRAWING INDICATES ACCEPTANCE OF PROFESSIONAL ENGINEERING RESPONSIBILITY SOLELY FOR THE TRUSS COMPONENT DESIGN SHOWN. THE SUITABILITY AND USE OF THIS COMPONENT FOR ANY BUILDING IS THE RESPONSIBILITY OF THE BUILDING DESIGNER PER ANSI/TPI 1 SEC. 2.

ARTHUR R. FISHER
LICENSE
No. 59687
STATE OF FLORIDA
PROFESSIONAL ENGINEER
09 02 '05

TC LL	20.0 PSF	REF R487-- 33422
TC DL	10.0 PSF	DATE 09/02/05
BC DL	10.0 PSF	DRW HCUSR487 05245128
BC LL	0.0 PSF	HC-ENG JB/AF
TOT.LD.	40.0 PSF	SEQN- 27332
DUR.FAC.	1.25	

ASCE 7-98: 110 MPH WIND SPEED, 15' MEAN HEIGHT, ENCLOSED, I = 1.00, EXPOSURE C

MAX GABLE VERTICAL LENGTH	2X4 GABLE VERTICAL SPACING	SPECIES	BRACE / GRADE	NO BRACES	(1) 1X4 "L" BRACE * GROUP A	(1) 1X4 "L" BRACE * GROUP B	(1) 2X4 "L" BRACE * GROUP A	(1) 2X4 "L" BRACE * GROUP B	(2) 2X4 "L" BRACE ** GROUP A	(2) 2X4 "L" BRACE ** GROUP B	(1) 2X6 "L" BRACE * GROUP A	(1) 2X6 "L" BRACE * GROUP B	(2) 2X6 "L" BRACE ** GROUP A	(2) 2X6 "L" BRACE ** GROUP B
	24" O.C.	SPF HF	#1 / #2	3' 10"	6' 8"	6' 10"	7' 11"	8' 1"	9' 5"	9' 8"	12' 5"	12' 9"	14' 0"	14' 0"
			#3	3' 9"	6' 0"	6' 0"	7' 11"	7' 11"	9' 5"	9' 5"	12' 4"	12' 4"	14' 0"	14' 0"
			STUD	3' 9"	6' 0"	6' 0"	7' 11"	7' 11"	9' 5"	9' 5"	12' 3"	12' 3"	14' 0"	14' 0"
			STANDARD	3' 9"	5' 2"	5' 2"	6' 9"	6' 9"	9' 1"	9' 1"	10' 7"	10' 7"	14' 0"	14' 0"
		SP DFL	#1	4' 3"	6' 8"	7' 2"	7' 11"	8' 6"	9' 5"	10' 2"	12' 5"	13' 5"	14' 0"	14' 0"
			#2	4' 2"	6' 8"	7' 2"	7' 11"	8' 6"	9' 5"	10' 2"	12' 5"	13' 5"	14' 0"	14' 0"
			#3	4' 0"	6' 2"	6' 2"	7' 11"	8' 1"	9' 5"	9' 11"	12' 5"	12' 8"	14' 0"	14' 0"
			STUD	4' 0"	6' 1"	6' 1"	7' 11"	8' 0"	9' 5"	9' 11"	12' 5"	12' 6"	14' 0"	14' 0"
			STANDARD	3' 10"	5' 3"	5' 3"	6' 11"	6' 11"	9' 4"	9' 4"	10' 10"	10' 10"	14' 0"	14' 0"
	16" O.C.	SPF HF	#1 / #2	4' 5"	7' 8"	7' 10"	9' 1"	9' 4"	10' 10"	11' 1"	14' 0"	14' 0"	14' 0"	14' 0"
			#3	4' 4"	7' 4"	7' 4"	9' 1"	9' 1"	10' 10"	10' 10"	14' 0"	14' 0"	14' 0"	14' 0"
			STUD	4' 4"	7' 4"	7' 4"	9' 1"	9' 1"	10' 10"	10' 10"	14' 0"	14' 0"	14' 0"	14' 0"
			STANDARD	4' 4"	6' 4"	6' 4"	8' 4"	8' 4"	10' 10"	10' 10"	12' 11"	12' 11"	14' 0"	14' 0"
		SP DFL	#1	4' 10"	7' 8"	8' 3"	9' 1"	9' 9"	10' 10"	11' 8"	14' 0"	14' 0"	14' 0"	14' 0"
			#2	4' 9"	7' 8"	8' 3"	9' 1"	9' 9"	10' 10"	11' 8"	14' 0"	14' 0"	14' 0"	14' 0"
			#3	4' 6"	7' 7"	7' 7"	9' 1"	9' 6"	10' 10"	11' 4"	14' 0"	14' 0"	14' 0"	14' 0"
			STUD	4' 6"	7' 6"	7' 6"	9' 1"	9' 6"	10' 10"	11' 4"	14' 0"	14' 0"	14' 0"	14' 0"
			STANDARD	4' 5"	6' 5"	6' 5"	8' 6"	8' 6"	10' 10"	11' 1"	13' 3"	13' 3"	14' 0"	14' 0"
	12" O.C.	SPF HF	#1 / #2	4' 11"	8' 5"	8' 8"	10' 0"	10' 3"	11' 11"	12' 3"	14' 0"	14' 0"	14' 0"	14' 0"
			#3	4' 9"	8' 5"	8' 5"	10' 0"	10' 0"	11' 11"	11' 11"	14' 0"	14' 0"	14' 0"	14' 0"
			STUD	4' 9"	8' 5"	8' 5"	10' 0"	10' 0"	11' 11"	11' 11"	14' 0"	14' 0"	14' 0"	14' 0"
			STANDARD	4' 9"	7' 3"	7' 3"	9' 7"	9' 7"	11' 11"	11' 11"	14' 0"	14' 0"	14' 0"	14' 0"
		SP DFL	#1	5' 4"	8' 5"	9' 1"	10' 0"	10' 9"	11' 11"	12' 10"	14' 0"	14' 0"	14' 0"	14' 0"
			#2	5' 3"	8' 5"	9' 1"	10' 0"	10' 9"	11' 11"	12' 10"	14' 0"	14' 0"	14' 0"	14' 0"
			#3	5' 0"	8' 5"	8' 5"	10' 0"	10' 6"	11' 11"	12' 6"	14' 0"	14' 0"	14' 0"	14' 0"
			STUD	5' 0"	8' 5"	8' 7"	10' 0"	10' 6"	11' 11"	12' 6"	14' 0"	14' 0"	14' 0"	14' 0"
			STANDARD	4' 11"	7' 5"	7' 5"	9' 10"	9' 10"	11' 11"	12' 3"	14' 0"	14' 0"	14' 0"	14' 0"

BRACING GROUP SPECIES AND GRADES:

GROUP A:

SPRUCE-PINE-FIR

#1 / #2	STANDARD
#3	STUD

HEM-FIR

#2	STUD
#3	STANDARD

DOUGLAS FIR-LARCH

#3
STUD
STANDARD

SOUTHERN PINE

#3
STUD
STANDARD

GROUP B:

HEM-FIR

#1 & BTR
#1

SOUTHERN PINE

#1
#2

DOUGLAS FIR-LARCH

#1
#2

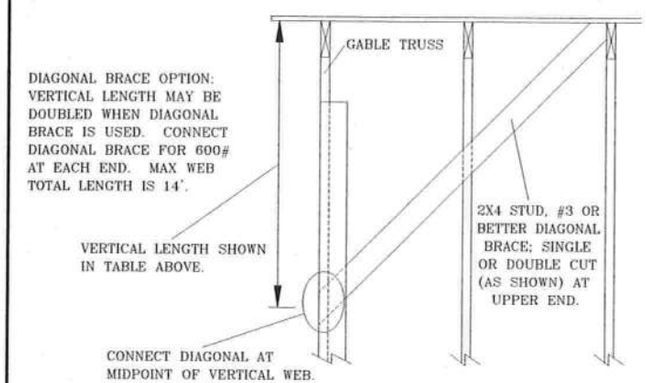

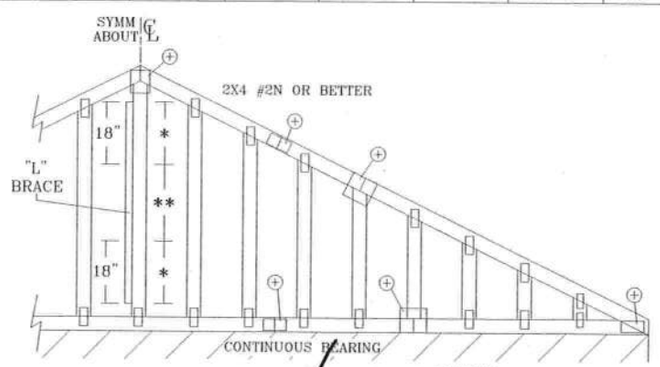

REFER TO CHART ABOVE FOR MAX. WEB VERTICAL LENGTH.

GABLE TRUSS DETAIL NOTES:

LIVE LOAD DEFLECTION CRITERIA IS L/240.

PROVIDE UPLIFT CONNECTIONS FOR 80 PLF OVER CONTINUOUS BEARING (5 PSF TC DEAD LOAD).

GABLE END SUPPORTS LOAD FROM 4' 0" OUTLOOKERS WITH 2' 0" OVERHANG, OR 12" PLYWOOD OVERHANG.

ATTACH EACH "L" BRACE WITH 10d NAILS.
* FOR (1) "L" BRACE: SPACE NAILS AT 2" O.C. IN 18" END ZONES AND 4" O.C. BETWEEN ZONES.
** FOR (2) "L" BRACES: SPACE NAILS AT 3" O.C. IN 18" END ZONES AND 6" O.C. BETWEEN ZONES.

"L" BRACING MUST BE A MINIMUM OF 80% OF WEB MEMBER LENGTH.

GABLE VERTICAL PLATE SIZES

VERTICAL LENGTH	NO SPLICE
LESS THAN 4' 0"	1X4 OR 2X3
GREATER THAN 4' 0", BUT LESS THAN 11' 6"	2X4
GREATER THAN 11' 6"	2.5X4

+ REFER TO COMMON TRUSS DESIGN FOR PEAK, SPLICE, AND HEEL PLATES.

ALPINE

ALPINE ENGINEERED PRODUCTS, INC.
POMPANO BEACH, FLORIDA

WARNING TRUSSES REQUIRE EXTREME CARE IN FABRICATING, HANDLING, SHIPPING, INSTALLING AND BRACING. REFER TO BCSI 1-03 (BUILDING COMPONENT SAFETY INFORMATION), PUBLISHED BY TPI (TRUSS PLATE INSTITUTE, 583 D'ONOFRIO DR., SUITE 200, MADISON, WI 53719) AND WTCA (WOOD TRUSS COUNCIL OF AMERICA, 6300 ENTERPRISE LN, MADISON, WI 53719) FOR SAFETY PRACTICES PRIOR TO PERFORMING THESE FUNCTIONS. UNLESS OTHERWISE INDICATED, TOP CHORD SHALL HAVE PROPERLY ATTACHED STRUCTURAL PANELS AND BOTTOM CHORD SHALL HAVE A PROPERLY ATTACHED RIGID CEILING.

IMPORTANT FURNISH COPY OF THIS DESIGN TO INSTALLATION CONTRACTOR. ALPINE ENGINEERED PRODUCTS, INC., SHALL NOT BE RESPONSIBLE FOR ANY DEVIATION FROM THIS DESIGN; ANY FAILURE TO BUILD THE TRUSS IN CONFORMANCE WITH TPI; OR FABRICATING, HANDLING, SHIPPING, INSTALLING & BRACING OF TRUSSES. DESIGN CONFORMS WITH APPLICABLE PROVISIONS OF NDS (NATIONAL DESIGN SPEC. BY AF&PA) AND TPI. ALPINE CONNECTOR PLATES ARE MADE OF 20/18/16GA (W,H/S/K) ASTM A653 GRADE 40/60 (W,K/H,S) GALV. STEEL. APPLY PLATES TO EACH FACE OF TRUSS AND, UNLESS OTHERWISE LOCATED ON THIS DESIGN, POSITION PER DRAWINGS 168A-Z. ANY INSPECTION OF PLATES FOLLOWED BY (I) SHALL BE PER ANNEX A3 OF TPI 1-2002 SEC. 3. A SEAL ON THIS DRAWING INDICATES ACCEPTANCE OF PROFESSIONAL ENGINEERING RESPONSIBILITY SOLELY FOR THE TRUSS COMPONENT DESIGN SHOWN. THE SUITABILITY AND USE OF THIS COMPONENT FOR ANY BUILDING IS THE RESPONSIBILITY OF THE BUILDING DESIGNER, PER ANSI/TPI 1 SEC. 2.

ARTHUR R. FISHER
LICENSE
No. 59687
STATE OF FLORIDA
PROFESSIONAL ENGINEER
09/03/2005

MAX. TOT. LD. 60 PSF

MAX. SPACING 24.0"

REF	ASCE7-98-GAB11015
DATE	11/26/03
DRWG	A11015EC1103
-ENG	

GABLE DETAIL
FOR LET-IN VERTICALS

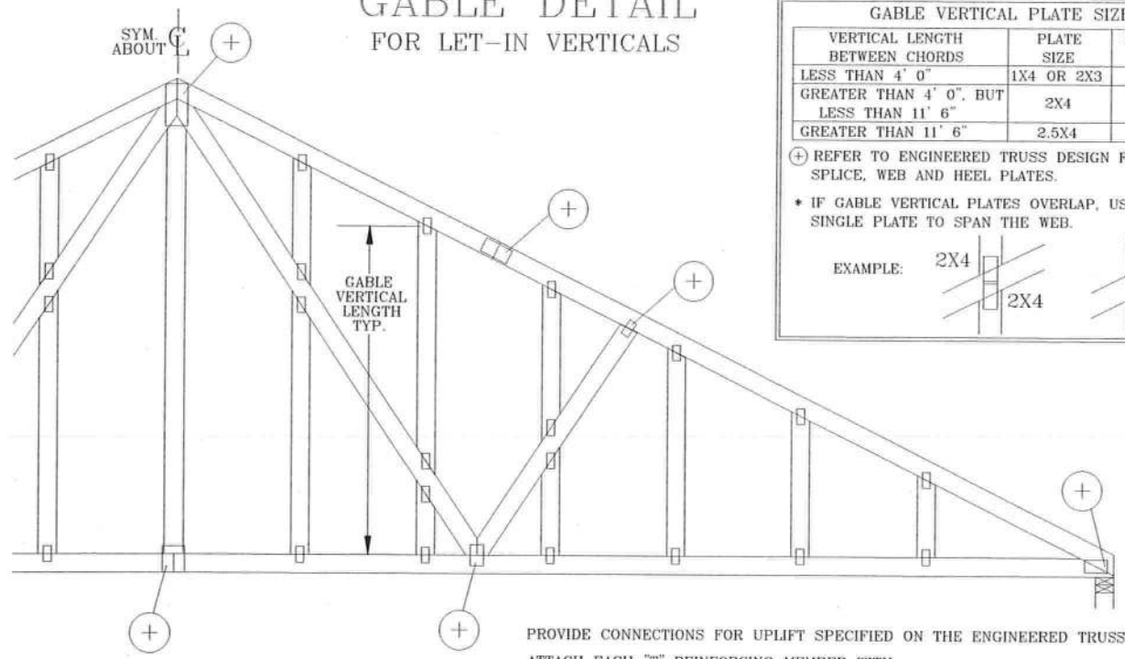

GABLE VERTICAL PLATE SIZES		
VERTICAL LENGTH BETWEEN CHORDS	PLATE SIZE	IF PLATES OVERLAP*
LESS THAN 4' 0"	1X4 OR 2X3	2X8
GREATER THAN 4' 0", BUT LESS THAN 11' 6"	2X4	2X8
GREATER THAN 11' 6"	2.5X4	2.5X8

(+) REFER TO ENGINEERED TRUSS DESIGN FOR PEAK, SPLICE, WEB AND HEEL PLATES.

* IF GABLE VERTICAL PLATES OVERLAP, USE A SINGLE PLATE TO SPAN THE WEB.

EXAMPLE:

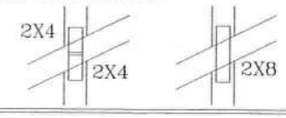

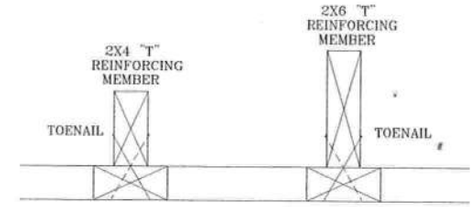

TO CONVERT FROM "L" TO "T" REINFORCING MEMBERS, MULTIPLY "T" FACTOR BY LENGTH (BASED ON GABLE VERTICAL SPECIES, GRADE AND SPACING) FOR (1) 2X4 "L" BRACE, GROUP A, OBTAINED FROM THE APPROPRIATE ALPINE GABLE DETAIL FOR ASCE OR SBCCI WIND LOAD.

MAXIMUM ALLOWABLE "T" REINFORCED GABLE VERTICAL LENGTH IS 14' FROM TOP TO BOTTOM CHORD.

WEB LENGTH INCREASE W/ "T" BRACE

WIND SPEED AND MRH	"T" REINF. MBR. SIZE	SBCCI	ASCE
110 MPH	2x4	10 %	10 %
15 FT	2x6	40 %	50 %
110 MPH	2x4	10 %	10 %
30 FT	2x6	50 %	50 %
100 MPH	2x4	10 %	10 %
15 FT	2x6	30 %	50 %
100 MPH	2x4	10 %	10 %
30 FT	2x6	40 %	40 %
90 MPH	2x4	20 %	10 %
15 FT	2x6	20 %	40 %
90 MPH	2x4	10 %	10 %
30 FT	2x6	30 %	50 %
80 MPH	2x4	10 %	20 %
15 FT	2x6	10 %	30 %
80 MPH	2x4	20 %	10 %
30 FT	2x6	20 %	40 %
70 MPH	2x4	0 %	20 %
15 FT	2x6	0 %	20 %
70 MPH	2x4	10 %	20 %
30 FT	2x6	10 %	30 %

EXAMPLE:
ASCE WIND SPEED = 100 MPH
MEAN ROOF HEIGHT = 30 FT
GABLE VERTICAL = 24" O.C. SP #3
"T" REINFORCING MEMBER SIZE = 2X4
"T" BRACE INCREASE (FROM ABOVE) = 10% = 1.10
(1) 2X4 "L" BRACE LENGTH = 6' 7"
MAXIMUM "T" REINFORCED GABLE VERTICAL LENGTH
1.10 x 6' 7" = 7' 3"

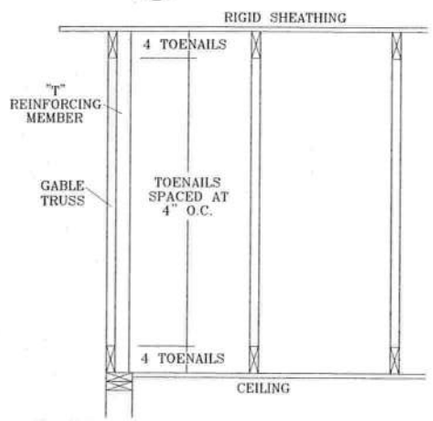

PROVIDE CONNECTIONS FOR UPLIFT SPECIFIED ON THE ENGINEERED TRUSS DESIGN.

ATTACH EACH "T" REINFORCING MEMBER WITH
HAND DRIVEN NAILS:
10d COMMON TOENAILS AT 4" O.C. PLUS (4) 16d COMMON TOENAILS IN TOP AND BOTTOM CHORD.
GUN DRIVEN NAILS - 0.131" X 3":
TOENAILS AT 4" O.C. PLUS (4) TOENAILS IN TOP AND BOTTOM CHORD.

THIS DETAIL TO BE USED WITH THE APPROPRIATE ALPINE GABLE DETAIL FOR ASCE OR SBCCI WIND LOAD.
ASCE 7-93 GABLE DETAIL DRAWINGS
A11015EN1103, A10015EN1103, A09015EN1103, A08015EN1103, A07015EN1103
A11030EN1103, A10030EN1103, A09030EN1103, A08030EN1103, A07030EN1103
ASCE 7-98 GABLE DETAIL DRAWINGS
A13015EC1103, A12015EC1103, A11015EC1103, A10015EC1103, A08515EC1103
A13030EC1103, A12030EC1103, A11030EC1103, A10030EC1103, A08530EC1103
SBCCI GABLE DETAIL DRAWINGS
S11015EN1103, S10015EN1103, S09015EN1103, S08015EN1103, S07015EN1103
S11030EN1103, S10030EN1103, S09030EN1103, S08030EN1103, S07030EN1103

SEE APPROPRIATE ALPINE GABLE DETAIL (ASCE OR SBCCI WIND LOAD) FOR MAXIMUM UNREINFORCED GABLE VERTICAL LENGTH.

ALPINE

ALPINE ENGINEERED PRODUCTS, INC.
POMPANO BEACH, FLORIDA

WARNING TRUSSES REQUIRE EXTREME CARE IN FABRICATING, HANDLING, SHIPPING, INSTALLING AND BRACING. REFER TO BCSI 1-03 (BUILDING COMPONENT SAFETY INFORMATION), PUBLISHED BY TPI (TRUSS PLATE INSTITUTE, 583 D'ONOFRIO DR., SUITE 200, MADISON, WI 53719) AND WTCA (WOOD TRUSS COUNCIL OF AMERICA, 6300 ENTERPRISE LN, MADISON, WI 53719) FOR SAFETY PRACTICES PRIOR TO PERFORMING THESE FUNCTIONS. UNLESS OTHERWISE INDICATED, TOP CHORD SHALL HAVE PROPERLY ATTACHED STRUCTURAL PANELS AND BOTTOM CHORD SHALL HAVE A PROPERLY ATTACHED RIGID CEILING.

IMPORTANT FURNISH COPY OF THIS DESIGN TO INSTALLATION CONTRACTOR. ALPINE ENGINEERED PRODUCTS, INC., SHALL NOT BE RESPONSIBLE FOR ANY DEVIATION FROM THIS DESIGN; ANY FAILURE TO BUILD THE TRUSS IN CONFORMANCE WITH TPI; OR FABRICATING, HANDLING, SHIPPING, INSTALLING & BRACING OF TRUSSES. DESIGN CONFORMS WITH APPLICABLE PROVISIONS OF NDS (NATIONAL DESIGN SPEC, BY AF&PA) AND TPI. ALPINE CONNECTOR PLATES ARE MADE OF 20/18/16GA (W,H/S/K) ASTM A653 GRADE 40/60 (W,K/H,S) GALV. STEEL. APPLY PLATES TO EACH FACE OF TRUSS AND, UNLESS OTHERWISE LOCATED ON THIS DESIGN, POSITION PER DRAWINGS 160A-Z. ANY INSPECTION OF PLATES FOLLOWED BY (I) SHALL BE PER ANNEX A3 OF TPI 1-2002 SEC. 3. A SEAL ON THIS DRAWING INDICATES ACCEPTANCE OF PROFESSIONAL ENGINEERING RESPONSIBILITY SOLELY FOR THE TRUSS COMPONENT DESIGN SHOWN. THE SUITABILITY AND USE OF THIS COMPONENT FOR ANY BUILDING IS THE RESPONSIBILITY OF THE BUILDING DESIGNER, PER ANSI/TPI 1 SEC. 2.

ARTHUR R. FISHER
LICENSE
No. 59687
STATE OF FLORIDA
PROFESSIONAL ENGINEER
09/01/2005

TOT. LD. 60 PSF
FAC. ANY
AX SPACING 24.0"

ACES DRAWINGS GAB98117 876,719 & HC26294035

REF	LET-IN VERT
DATE	01/16/04
DRWG	GBLLETIN1103
-ENG	DLJ/KAR

COLUMBIA COUNTY BUILDING DEPARTMENT

RESIDENTIAL MINIMUM PLAN REQUIREMENTS AND CHECKLIST FOR FLORIDA BUILDING CODE 2001
ONE (1) AND TWO (2) FAMILY DWELLINGS

ALL REQUIREMENTS ARE SUBJECT TO CHANGE
EFFECTIVE MARCH 1, 2002

ALL BUILDING PLANS MUST INDICATE THE FOLLOWING ITEMS AND INDICATE COMPLIANCE WITH CHAPTER 1606 OF THE FLORIDA BUILDING CODE 2001 BY PROVIDING CALCULATIONS AND DETAILS THAT HAVE THE SEAL AND SIGNATURE OF A CERTIFIED ARCHITECT OR ENGINEER REGISTERED IN THE STATE OF FLORIDA, OR ALTERNATE METHODOLOGIES, APPROVED BY THE STATE OF FLORIDA BUILDING COMMISSION FOR ONE-AND-TWO FAMILY DWELLINGS. FOR DESIGN PURPOSES THE FOLLOWING BASIC WIND SPEED AS PER FIGURE 1606 SHALL BE USED.

WIND SPEED LINE SHALL BE DEFINED AS FOLLOWS: THE CENTERLINE OF INTERSTATE 75.
1. ALL BUILDINGS CONSTRUCTED EAST OF SAID LINE SHALL BE -------- 100 MPH
2. ALL BUILDINGS CONSTRUCTED WEST OF SAID LINE SHALL BE --------110 MPH
3. NO AREA IN COLUMBIA COUNTY IS IN A WIND BORNE DEBRIS REGION

APPLICANT – PLEASE CHECK ALL APPLICABLE BOXES BEFORE SUBMITTAL

GENERAL REQUIREMENTS: Two (2) complete sets of plans containing the following:

Applicant	Plans Examiner	
☑	☐	All drawings must be clear, concise and drawn to scale ("Optional " details that are not used shall be marked void or crossed off). Square footage of different areas shall be shown on plans.
☑	☐	Designers name and signature on document (FBC 104.2.1). If licensed architect or engineer, official seal shall be affixed.
☑	☐	**Site Plan including:** a) Dimensions of lot b) Dimensions of building set backs c) Location of all other buildings on lot, well and septic tank if applicable, and all utility easements. d) Provide a full legal description of property.
☑	☐	**Wind-load Engineering Summary, calculations and any details required** a) Plans or specifications must state compliance with FBC Section 1606 b) The following information must be shown as per section 1606.1.7 FBC a. Basic wind speed (MPH) b. Wind importance factor (I) and building category c. Wind exposure – if more than one wind exposure is used, the wind exposure and applicable wind direction shall be indicated d. The applicable internal pressure coefficient e. Components and Cladding. The design wind pressure in terms of psf (kN/m²), to be used for the design of exterior component and cladding materials not specifically designed by the registered design professional
☑	☐	**Elevations including:**
☑	☑	a) All sides
☑	☑	b) Roof pitch
☐	☑	c) Overhang dimensions and detail with attic ventilation
☐	☑	d) Location, size and height above roof of chimneys
☐	☑	e) Location and size of skylights
☑	☑	f) Building height
☑	☑	e) Number of stories

Hold for new code wind load statement 10-5-05

Floor Plan including:

- ☑ ☐ a) Rooms labeled and dimensioned
- ☑ ☐ b) Shear walls
- ☑ ☐ c) Windows and doors (including garage doors) showing size, mfg., approval listing and attachment specs. (FBC 1707) and safety glazing where needed (egress windows in bedrooms to be shown)
- ☐ ☑ d) Fireplaces (gas appliance) (vented or non-vented) or wood burning with hearth
- ☐ ☑ e) Stairs with dimensions (width, tread and riser) and details of guardrails and handrails
- ☑ ☐ f) Must show and identify accessibility requirements (accessible bathroom)

Foundation Plan including:

- ☑ ☐ a) Location of all load-bearing wall with required footings indicated as standard Or monolithic and dimensions and reinforcing
- ☑ ☑ b) All posts and/or column footing including size and reinforcing
- ☐ ☑ c) Any special support required by soil analysis such as piling
- ☑ ☑ d) Location of any vertical steel

Roof System:

- ☑ ☐ a) Truss package including:
  1. Truss layout and truss details signed and sealed by Fl. Pro. Eng.
  2. Roof assembly (FBC 104.2.1 Roofing system, materials, manufacturer, fastening requirements and product evaluation with wind resistance rating)
- ☐ ☐ b) Conventional Framing Layout including:
  1. Rafter size, species and spacing
  2. Attachment to wall and uplift
  3. Ridge beam sized and valley framing and support details
  4. Roof assembly (FBC 104.2.1 Roofing systems, materials, manufacturer, fastening requirements and product evaluation with wind resistance rating)

Wall Sections including:

- ☐ ☐ a) Masonry wall
  1. All materials making up wall
  2. Block size and mortar type with size and spacing of reinforcement
  3. Lintel, tie-beam sizes and reinforcement
  4. Gable ends with rake beams showing reinforcement or gable truss and wall bracing details
  5. All required connectors with uplift rating and required number and size of fasteners for continuous tie from roof to foundation
  6. Roof assembly shown here or on roof system detail (FBC 104.2.1 Roofing system, materials, manufacturer, fastening requirements and product evaluation with resistance rating)
  7. Fire resistant construction (if required)
  8. Fireproofing requirements
  9. Shoe type of termite treatment (termicide or alternative method)
  10. Slab on grade
      a. Vapor retardant (6mil. Polyethylene with joints lapped 6 inches and sealed)
      b. Must show control joints, synthetic fiber reinforcement or Welded fire fabric reinforcement and supports
  11. Indicate where pressure treated wood will be placed
  12. Provide insulation R value for the following:
      a. Attic space
      b. Exterior wall cavity
      c. Crawl space (if applicable)

☑ ☐ **b) Wood frame wall**

1. All materials making up wall
2. Size and species of studs
3. Sheathing size, type and nailing schedule
4. Headers sized
5. Gable end showing balloon framing detail or gable truss and wall hinge bracing detail
6. All required fasteners for continuous tie from roof to foundation (truss anchors, straps, anchor bolts and washers)
7. Roof assembly shown here or on roof system detail (FBC104.2.1 Roofing system, materials, manufacturer, fastening requirements and product evaluation with wind resistance rating)
8. Fire resistant construction (if applicable)
9. Fireproofing requirements
10. Show type of termite treatment (termicide or alternative method)
11. Slab on grade
    a. Vapor retardant (6Mil. Polyethylene with joints lapped 6 inches and sealed
    b. Must show control joints, synthetic fiber reinforcement or welded wire fabric reinforcement and supports
12. Indicate where pressure treated wood will be placed
13. Provide insulation R value for the following:
    a. Attic space
    b. Exterior wall cavity
    c. Crawl space (if applicable)

☐ ☐ c) Metal frame wall and roof (designed, signed and sealed by Florida Prof. Engineer or Architect)

Floor Framing System:

☐ ☐ a) Floor truss package including layout and details, signed and sealed by Florida Registered Professional Engineer

☐ ☐ b) Floor joist size and spacing

☐ ☐ c) Girder size and spacing

☐ ☐ d) Attachment of joist to girder

☐ ☐ e) Wind load requirements where applicable

☐ ☐ **Plumbing Fixture layout**

Electrical layout including:

☑ ☑ a) Switches, outlets/receptacles, lighting and all required GFCI outlets identified

☑ ☐ b) Ceiling fans

☑ ☐ c) Smoke detectors

☑ ☐ d) Service panel and sub-panel size and location(s)

☑ ☐ e) Meter location with type of service entrance (overhead or underground)

☑ ☐ f) Appliances and HVAC equipment

☑ ☐ g) Arc Fault Circuits (AFCI) in bedrooms

HVAC Information

☑ ☐ a) Manual J sizing equipment or equivalent computation

☑ ☐ b) Exhaust fans in bathroom

☑ ☐ **Energy Calculations** (dimensions shall match plans)

☐ ☐ **Gas System** Type (LP or Natural) Location and BTU demand of equipment

☐ ☐ **Disclosure Statement for Owner Builders**

☑ ☐ ***Notice Of Commencement Required Before Any Inspections Will Be Done**

☑ ☐ **Private Potable Water**

City water

a) Size of pump motor

b) Size of pressure tank

c) Cycle stop valve if used

THE FOLLOWING ITEMS MUST BE SUBMITTED WITH BUILDING PLANS

1. **Building Permit Application:** A current Building Permit Application form is to be completed and submitted for all residential projects.

2. **Parcel Number:** The parcel number (Tax ID number) from the Property Appraiser (386) 758-1084 is required. A copy of property deed is also requested.

3. **Environmental Health Permit or Sewer Tap Approval:** A copy of the Environmental Health permit, existing septic approval or sewer tap approval is required before a building permit can be issued.
   (386) 758-1058 **(Toilet facilities shall be provided for construction workers)**

4. **City Approval:** If the project is to be located within the city limits of the Town of Fort White, prior approval is required. The Town of Fort White approval letter is required to be submitted by the owner or contractor to this office when applying for a Building Permit. (386) 497-2321

5. **Flood Information:** All projects within the Floodway of the Suwannee or Santa Fe Rivers shall require permitting through the Suwannee River Water Management District, before submitting application to this office. Any project located within a flood zone where the base flood elevation (100 year flood) has been established shall meet the requirements of Section 8.8 of the Columbia County Land Development Regulations. Any project located within a flood zone where the base flood elevation has not been established (Zone A) shall meet the requirements of Section 8.7 of the Columbia County Land Development Regulations. **CERTIFIED FINISHED FLOOR ELEVATIONS WILL BE REQUIRED ON ANY PROJECT WHERE THE BASE FLOOD ELEVATION (100 YEAR FLOOD) HAS BEEN ESTABLISHED.**
   A development permit will also be required. Development permit cost is **$50.00**

6. **Driveway Connection:** If the property does not have an existing access to a public road, then an application for a culvert permit (**$25.00**) must be made. If the applicant feels that a culvert is not needed, they may apply for a culvert waiver (**$50.00**). All culvert waivers are sent to the Columbia County Public Works Department for approval or denial.

7. **911 Address:** If the project is located in an area where the 911 address has been issued, then the proper paperwork from the 911 Addressing Department must be submitted. (386) 752-8787

ALL REQUIRED INFORMATION IS TO BE SUBMITTED FOR REVIEW. YOU WILL BE NOTIFIED WHEN YOUR APPLICATION AND PLANS ARE APPROVED AND READY TO PERMIT. PLEASE DO NOT EXPECT OR REQUEST THAT PERMIT APPLICATIONS BE REVIEWED OR APPROVED WHILE YOU ARE HERE – TIME WILL NOT ALLOW THIS –PLEASE DO NOT ASK

NOTICE:

ADDRESSES BY APPOINTMENT ONLY!

TO OBTAIN A 9-1-1 ADDRESS THE REQUESTER MUST CONTACT THE COLUMBIA COUNTY 9-1-1 ADDRESSING DEPARTMENT AT (386) 752-8787 FOR AN APPOINTMENT TIME AND DATE:

YOU CAN NOT OBTAIN A NEW ADDRESS OVER THE TELEPHONE. MUST MAKE AN APPOINTMENT!

THE ADDRESSING DEPARTMENT IS LOCATED AT 263 NW LAKE CITY AVENUE (OFF OF WEST U.S. HIGHWAY 90 WEST OF INTERSTATE 75 AT THE COLUMBIA COUNTY EMERGENCY OPERATIONS CENTER).

THE REQUESTER WILL NEED THE FOLLOWING:

1. THE PARCEL OR TAX ID NUMBER (SAMPLE: "25-4S-17-12345-123" OR "R12345-123) FOR THE PROPERTY.
2. A PLAT, PLAN, SITE PLAN, OR DRAWING SHOWING THE PROPERTY LINES OF THE PARCEL.
   a. LOCATION OF PLANNED RESIDENT OR BUSINESS STRUCTURE ON THE PROPERTY WITH DISTANCES FROM TWO OF THE PROPERTY LINES TO THE STRUCTURE (SEE SAMPLE BELOW).
   b. LOCATION OF THE ACCESS POINT (DRIVEWAY, ETC.) ON THE ROADWAY FROM WHICH LOCATION IS TO BE ADDRESSED WITH A DISTANCE FROM A PARALLEL PROPERTY LINE AND OR PROPERTY CORNER (SEE SAMPLE BELOW).
   c. TRAVEL OF THE DRIVEWAY FROM THE ACCESS POINT TO THE STRUCTURE (SEE SAMPLE BELOW).

SAMPLE:

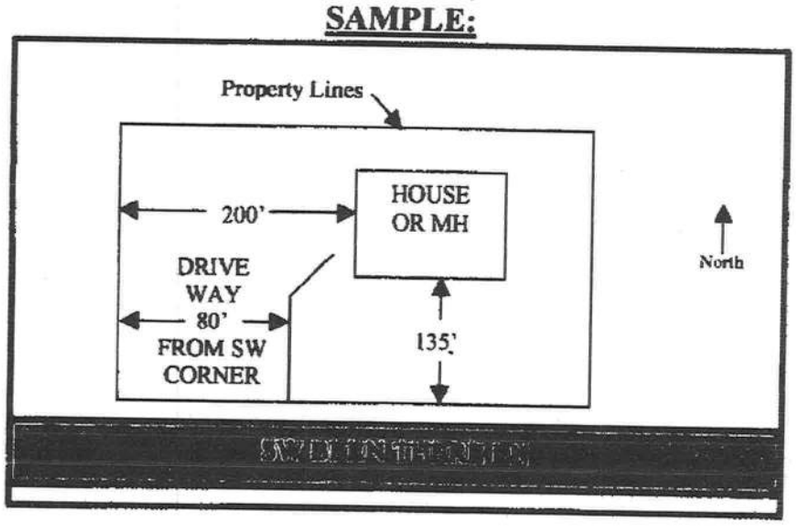

NOTE: 5 TO 7 WORKING DAYS MAY BE REQUIRED IF ADDRESSING DEPARTMENT NEEDS TO CONDUCT AN ON SITE SURVEY.

23756

Columbia County Building Department
Culvert Permit

Culvert Permit No.
000000857

DATE 10/24/2005 PARCEL ID # 23-4S-16-03099-218

APPLICANT JONATHAN PERRY PHONE 719-7192

ADDRESS 373 NW OLD MILL DR LAKE CITY FL FL 32024

OWNER DONNIE WILLIAMS PHONE 755-0764

ADDRESS 217 LANCELOT GLEN LAKE CITY FL FL 32024

CONTRACTOR JONATHAN PERRY PHONE 623-2608

LOCATION OF PROPERTY 341, R ON STONEHENGE LN, GO TO LANCELOT GLEN, 5TH ON THE LEFT

SUBDIVISION/LOT/BLOCK/PHASE/UNIT STONEHENGE 18 2

SIGNATURE

INSTALLATION REQUIREMENTS

[X] Culvert size will be 18 inches in diameter with a total lenght of 32 feet, leaving 24 feet of driving surface. Both ends will be mitered 4 foot with a 4 : 1 slope and poured with a 4 inch thick reinforced concrete slab.

INSTALLATION NOTE: Turnouts will be required as follows:
a) a majority of the current and existing driveway turnouts are paved, or;
b) the driveway to be served will be paved or formed with concrete.
Turnouts shall be concrete or paved a minimum of 12 feet wide or the width of the concrete or paved driveway, whichever is greater. The width shall conform to the current and existing paved or concreted turnouts.

[ ] Culvert installation shall conform to the approved site plan standards.

[ ] Department of Transportation Permit installation approved standards.

[ ] Other

ALL PROPER SAFETY REQUIREMENTS SHOULD BE FOLLOWED DURING THE INSTALATION OF THE CULVERT.

135 NE Hernando Ave., Suite B-21
Lake City, FL 32055
Phone: 386-758-1008 Fax: 386-758-2160

Amount Paid 25.00

COLUMBIA COUNTY · GATEWAY TO FLORIDA

Columbia County Building Permit Application

Revised 9-23-04

For Office Use Only Application # 0510-10 Date Received 10-4-05 By LH Permit # 857/23756

Application Approved by - Zoning Official BLK Date 24.10.05 Plans Examiner OK JTH Date 10-12-05

Flood Zone X per plat Development Permit N/A Zoning RSF-2 Land Use Plan Map Category RES. Low Dec

Comments Elevation letter "Sam Eng. or Elevation letter confirming greater height before slab inspection Give Permittee copy of Eng. letter.

Applicants Name Jonathan D. Perry Const. LLC Phone (386)719-7192

Address 373 NW Old Mill Dr.

Owners Name Donny Williams Phone (386)755-0764

911 Address 217 Lancelot Glen Lake City FL 32024

Contractors Name Jonathan D. Perry Phone (386)623-2608

Address 373 NW Old Mill Dr.

Fee Simple Owner Name & Address Donny Williams

Bonding Co. Name & Address N/A

Architect/Engineer Name & Address Mark Disoway

Mortgage Lenders Name & Address Donny Williams

Circle the correct power company - FL Power & Light - (Clay Elec.) - Suwannee Valley Elec. - Progressive Energy

Property ID Number 23-4S-16-03099218 Estimated Cost of Construction $120,000.00

Subdivision Name Stonehinge Lot 18 Block ___ Unit ___ Phase II

Driving Directions Sisters Welcome Rd to Stonehinge Subdivision turn Right on Stonehinge LN. Go to second Rd on Right to Lancelot Glen 5th lot on Left.

Type of Construction Single family Number of Existing Dwellings on Property 0

Total Acreage 1.01 Lot Size 1.01 Do you need a (Culvert Permit) or Culvert Waiver or Have an Existing Drive

Actual Distance of Structure from Property Lines - Front 58' Side 21.8' Side 44.8' Rear 250'

Total Building Height 20' Number of Stories 1 Heated Floor Area 1934 Roof Pitch 6/12

Porches 86 GARAGE 546 TOTAL 2877

Application is hereby made to obtain a permit to do work and installations as indicated. I certify that no work or installation has commenced prior to the issuance of a permit and that all work be performed to meet the standards of all laws regulating construction in this jurisdiction.

OWNERS AFFIDAVIT: I hereby certify that all the foregoing information is accurate and all work will be done in compliance with all applicable laws and regulating construction and zoning.

WARNING TO OWNER: YOUR FAILURE TO RECORD A NOTICE OF COMMENCMENT MAY RESULT IN YOU PAYING TWICE FOR IMPROVEMENTS TO YOUR PROPERTY. IF YOU INTEND TO OBTAIN FINANCING, CONSULT WITH YOUR LENDER OR ATTORNEY BEFORE RECORDING YOUR NOTICE OF COMMENCEMENT.

Owner Builder or Agent (Including Contractor)

Contractor Signature

Contractors License Number CBC058042

Competency Card Number

STATE OF FLORIDA
COUNTY OF COLUMBIA

NOTARY STAMP/SEAL

LAURIE HODGSON
MY COMMISSION # DD 333503
EXPIRES: June 28, 2008
Bonded Thru Notary Public Underwriters

Sworn to (or affirmed) and subscribed before me this 4 day of October 20 05.

Personally known ✓ or Produced Identification ___

Notary Signature

PERMITTEE'S COPY

FLOOR ELEVATIONS

PROPERTY DESCRIPTION: **Stonehenge Subdivision, Phase 2**

OWNER: Donald E. Williams

PROJECT REQUIREMENTS: Finish floor elevations for Stonehenge Subdivision, Phase 2.

On all lots, except those listed below, the minimum finish floor elevation of all proposed habitable buildings shall be a minimum of 12 inches above the highest adjacent existing ground elevation at the proposed building.

Lots 1, 2, 3, 4, & 5: The minimum finish floor elevation of all proposed habitable buildings shall be the higher of 12 inches above the highest adjacent existing ground elevation at the proposed building or 12 inches above the highest adjacent roadway.

Lots 17, 18, 19, 20, & 21: The minimum finish floor elevation of all proposed habitable buildings shall be the higher of 12 inches above the highest adjacent existing ground elevation at the proposed building or 18 inches above the east end of pavement adjacent to the retention pond.

All lots and driveways shall be graded to direct all runoff around and away from all points on exterior of the proposed building without changing direction, final destination, or quantity of runoff leaving the site. Lots shall not be filled, except for building pads, next to retention ponds.

The above elevations were obtained by using highly variable factors determined by a study of the watershed and by accepted water management district rainfall data and practices. Many judgements and assumptions are required to establish these factors. The resultant data is sensitive to changes, particularly of antecedent conditions, fill, urbanization, channelization, and land use.

The elevations are based on the 100-year flood, which is the flood having a 1% chance of being exceeded in any year.

Arthur N. Bedenbaugh 10-6-05

Arthur N. Bedenbaugh
Fla. P.E. #9162
637 SW Hillcrest St
Lake City, Florida 32025
(386) 752-5846

FLOOR ELEVATIONS

PROPERTY DESCRIPTION: **Stonehenge Subdivision, Phase 2**

OWNER: Donald E. Williams

PROJECT REQUIREMENTS: Finish floor elevations for Stonehenge Subdivision, Phase 2.

On all lots, except those listed below, the minimum finish floor elevation of all proposed habitable buildings shall be a minimum of 12 inches above the highest adjacent existing ground elevation at the proposed building.

Lots 1, 2, 3, 4, & 5: The minimum finish floor elevation of all proposed habitable buildings shall be the higher of 12 inches above the highest adjacent existing ground elevation at the proposed building or 12 inches above the highest adjacent roadway.

Lots 17, 18, 19, 20, & 21: The minimum finish floor elevation of all proposed habitable buildings shall be the higher of 12 inches above the highest adjacent existing ground elevation at the proposed building or 18 inches above the east end of pavement adjacent to the retention pond.

All lots and driveways shall be graded to direct all runoff around and away from all points on exterior of the proposed building without changing direction, final destination, or quantity of runoff leaving the site. Lots shall not be filled, except for building pads, next to retention ponds.

The above elevations were obtained by using highly variable factors determined by a study of the watershed and by accepted water management district rainfall data and practices. Many judgements and assumptions are required to establish these factors. The resultant data is sensitive to changes, particularly of antecedent conditions, fill, urbanization, channelization, and land use.

The elevations are based on the 100-year flood, which is the flood having a 1% chance of being exceeded in any year.

Arthur N. Bedenbaugh 10-6-05

Arthur N. Bedenbaugh
Fla. P.E. #9162
637 SW Hillcrest St
Lake City, Florida 32025
(386) 752-5846

COLUMBIA COUNTY BUILDING DEPARTMENT
CHECKLIST FOR PERMITTING

Application # 0510-10

✓ **Notarized completed Building Permit Application**
Notes:

X **If an Owner Builder, signed Disclosure Statement**
Notes:

✓ **Recorded Deed or a Notarized Affidavit (form from the Building Dept.)**
Notes:

✓ **Approved and Signed Site Plan from Environmental Health on the septic**
Notes:

✓ **Site plan with actual distances of the structure to each property line**
Notes: On Plans

✓ **911 Address form, Contact 386.752.8787 for an appointment**
Notes:

✓ **Residential or Commercial Checklist completed**
Notes:

✓ **Driving directions including all road names**
Notes:

✓ **Well information (on plans or letter from the well driller)**
Notes: City Water

✓ **Before the 1st inspection Recorded Notice of Commencement signed by owner**
Notes:

✓ **2 sets of plans (blueprints)**
Notes:

✓ **2 sets of sealed truss engineering**
Notes:

✓ **2 sets of energy code & manual J**
Notes:

✓ **2 sets of engineering packets including specs on windows, doors, roof and etc.**
Notes:

Application for Onsite Sewage Disposal System Construction Permit. Part II Site Plan

Permit Application Number: 05-0990N

ALL CHANGES MUST BE APPROVED BY THE COUNTY HEALTH UNIT

PERRY/CR 05-3075

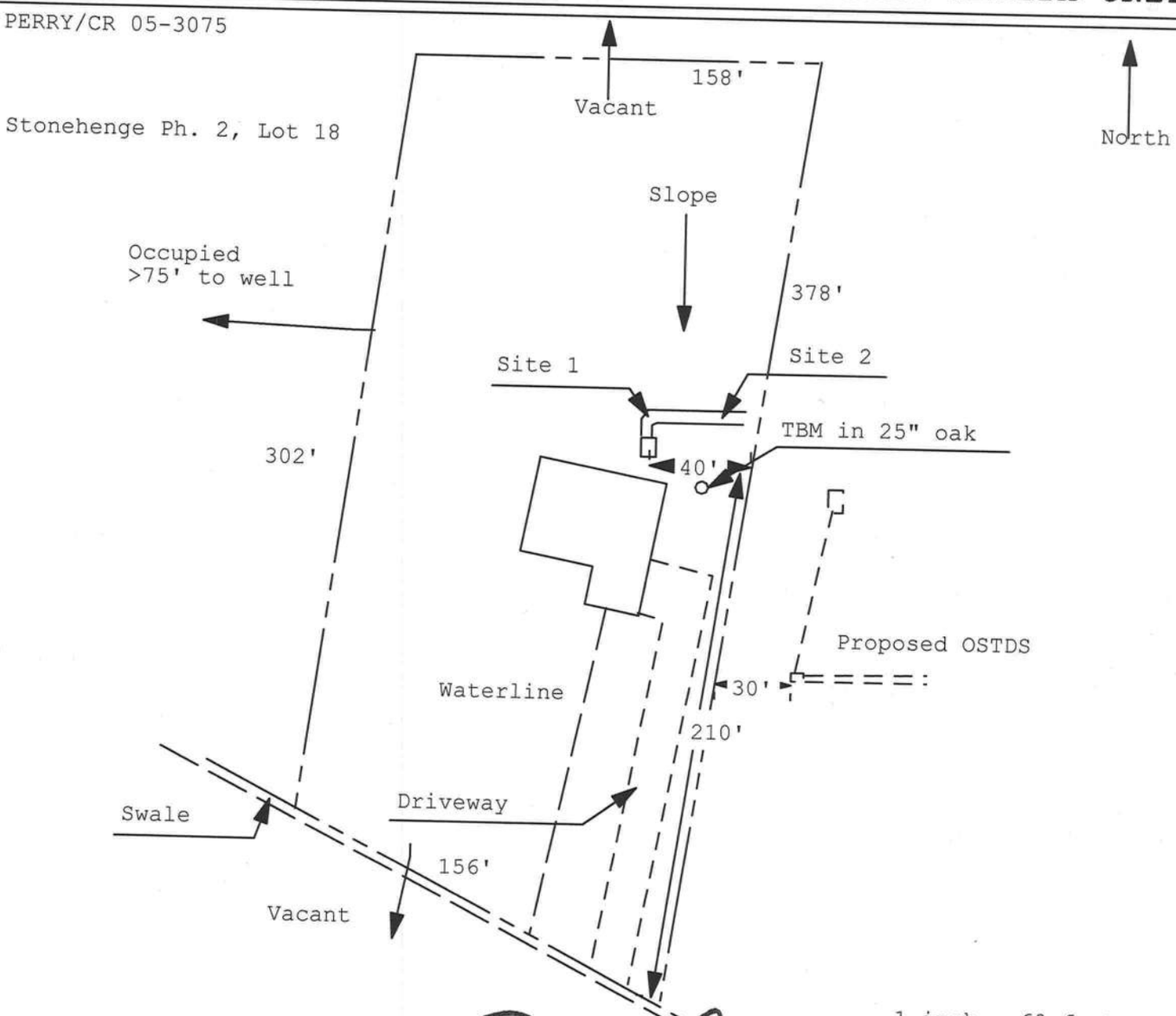

1 inch = 60 feet

Site Plan Submitted By Paul Lloyd **Date** 9/12/05

Plan Approved ✓ **Not Approved** ____ **Date** 10-3-05

By [illegible] Columbia **CPHU**

Notes:

Columbia County Property Appraiser

DB Last Updated: 9/16/2005

2005 Proposed Values

Parcel: 23-4S-16-03099-000

Tax Record | Property Card | Interactive GIS Map | Print

<< Prev | Search Result: 5 of 17 | Next >>

Owner & Property Info

Owner's Name	WILLIAMS DONALD E & SANDRA P &
Site Address	
Mailing Address	MHATRE UMESH M & SHILPA U 541 SW AIRPARK GLN LAKE CITY, FL 32025
Brief Legal	S1/2 OF NW1/4, EX RR & EX RD & EX STONEHENGE S/D PHASE 1 & EX THE S 324.25 FT OF N1/2

Use Desc. (code)	TIMBERLAND (005700)
Neighborhood	23416.00
Tax District	2
UD Codes	MKTA06
Market Area	06
Total Land Area	54.090 ACRES

Property & Assessment Values

Mkt Land Value	cnt: (0)	$0.00
Ag Land Value	cnt: (1)	$6,058.00
Building Value	cnt: (0)	$0.00
XFOB Value	cnt: (0)	$0.00
Total Appraised Value		$6,058.00

Just Value	$135,225.00
Class Value	$6,058.00
Assessed Value	$6,058.00
Exempt Value	$0.00
Total Taxable Value	$6,058.00

Sales History

Sale Date	Book/Page	Inst. Type	Sale Vlmp	Sale Qual	Sale RCode	Sale Price
7/30/2002	959/106	WD	I	Q		$133,000.00

Building Characteristics

Bldg Item	Bldg Desc	Year Blt	Ext. Walls	Heated S.F.	Actual S.F.	Bldg Value
NONE						

Extra Features & Out Buildings

Code	Desc	Year Blt	Value	Units	Dims	Condition (% Good)
NONE						

Land Breakdown

Lnd Code	Desc	Units	Adjustments	Eff Rate	Lnd Value
005700	TIMBER 4 (AG)	54.090 AC	1.00/1.00/1.00/1.00	$112.00	$6,058.00
009910	MKT.VAL.AG (MKT)	54.090 AC	1.00/1.00/1.00/1.00	$0.00	$135,225.00

Columbia County Property Appraiser

DB Last Updated: 9/16/2005

<< Prev | 5 of 17 | Next >>

NOTICE OF COMMENCEMENT FORM
COLUMBIA COUNTY, FLORIDA

THE UNDERSIGNED hereby gives notice that improvement will be made to certain real property, and in accordance with Chapter 713, Florida Statutes, the following information is provided in this Notice of Commencement.

Tax Parcel ID Number 3099218

1. Description of property: (legal description of the property and street address or 911 address)
LOT 18 STONEHENGE SUBDIVISION PHASE 2, COLUMBIA COUNTY, FLORIDA

2. General description of improvement: NEW HOUSE

3. Owner Name & Address Donald E. Williams
541 SW Airpark Glen, LAKE CITY, FL 32025 **Interest in Property** OWNERS

4. Name & Address of Fee Simple Owner (if other than owner): SAME AS ABOVE

5. Contractor Name JONATHAN PERRY CONSTRUCTION LLC **Phone Number** 719-7192
Address 373 NW OLD MILL DRIVE, LAKE CITY, FL 32055

6. Surety Holders Name NONE
Address **Phone Number**
Amount of Bond

Inst:2005024593 Date:10/04/2005 Time:11:47
DC,P.DeWitt Cason,Columbia County B:1060 P:1869

7. Lender Name NONE
Address

8. Persons within the State of Florida designated by the Owner upon whom notices or other documents may be served as provided by section 718.13 (1)(a) 7; Florida Statutes:
Name DONNY WILLIAMS CONSTRUCTION LLC **Phone Number** 755-0764
Address 541 SW AIRPARK GLEN, LAKE CITY, FL

9. In addition to himself / herself the owner designates None
to receive a copy of the Lienor's Notice as provided in Section 713.13 (1) - (a) 7. Phone Number of the designee NA **of**

10. Expiration date of the Notice of Commencement (the expiration date is 1 (one) year from the date of recording, (Unless a different date is specified)

NOTICE AS PER CHAPTER 713, Florida Statutes:
The owner must sign the notice of commencement and no one else may be permitted to sign in his/her stead.

Donald E Williams
Signature of Owner

WORTH D. MORRIS
MY COMMISSION EXPIRES
June 16, 2007
#DD 188249
Bonded thru Notary Public Underwriters
NOTARY PUBLIC, STATE OF FLORIDA

Sworn to (or affirmed) and subscribed before day of Oct. 3 **,20** 05

NOTARY STAMP/SEAL

Worth D. Morris
Signature of Notary

FORM 600A-2001

FLORIDA ENERGY EFFICIENCY CODE FOR BUILDING CONSTRUCTION

Florida Department of Community Affairs

Residential Whole Building Performance Method A

Project Name:	**Stonehenge Lot 18 ph2**	Builder:	**J. Perry**
Address:	**Lot: 18, Sub: Stonehenge Ph2, Plat:**	Permitting Office:	**Columbia Co**
City, State:	**Lake City, FL 32055-**	Permit Number:	
Owner:	**J. Perry**	Jurisdiction Number:	**221000**
Climate Zone:	**North**		

1. New construction or existing		New	—
2. Single family or multi-family		Single family	—
3. Number of units, if multi-family		1	—
4. Number of Bedrooms		3	—
5. Is this a worst case?		No	—
6. Conditioned floor area (ft²)		1934 ft²	
7. Glass area & type	Single Pane	Double Pane	—
a. Clear glass, default U-factor	0.0 ft²	249.0 ft²	—
b. Default tint	0.0 ft²	0.0 ft²	—
c. Labeled U or SHGC	0.0 ft²	0.0 ft²	
8. Floor types			—
a. Slab-On-Grade Edge Insulation		R=0.0, 228.0(p) ft	—
b. N/A			—
c. N/A			—
9. Wall types			—
a. Frame, Wood, Exterior		R=11.0, 1491.0 ft²	—
b. N/A			—
c. N/A			—
d. N/A			—
e. N/A			—
10. Ceiling types			—
a. Under Attic		R=30.0, 1934.0 ft²	—
b. N/A			—
c. N/A			—
11. Ducts			—
a. Sup: Unc. Ret: Unc. AH: Garage		Sup. R=6.0, 50.0 ft	—
b. N/A			—

12. Cooling systems		
a. Central Unit	Cap: 35.0 kBtu/hr	—
	SEER: 10.00	—
b. N/A		—
		—
c. N/A		—
		—
13. Heating systems		—
a. Electric Heat Pump	Cap: 35.0 kBtu/hr	—
	HSPF: 7.90	—
b. N/A		—
		—
c. N/A		—
		—
14. Hot water systems		—
a. Electric Resistance	Cap: 30.0 gallons	—
	EF: 0.90	—
b. N/A		—
		—
c. Conservation credits		—
(HR-Heat recovery, Solar		—
DHP-Dedicated heat pump)		
15. HVAC credits	PT, CF,	—
(CF-Ceiling fan, CV-Cross ventilation,		
HF-Whole house fan,		
PT-Programmable Thermostat,		
MZ-C-Multizone cooling,		
MZ-H-Multizone heating)		

Glass/Floor Area: 0.13

Total as-built points: 26120

Total base points: 28659

PASS

I hereby certify that the plans and specifications covered by this calculation are in compliance with the Florida Energy Code.

PREPARED BY: Tim Delbene

DATE: 9/20/05

I hereby certify that this building, as designed, is in compliance with the Florida Energy Code.

OWNER/AGENT: _____

DATE: _____

Review of the plans and specifications covered by this calculation indicates compliance with the Florida Energy Code. Before construction is completed this building will be inspected for compliance with Section 553.908 Florida Statutes.

GREAT SEAL OF THE STATE OF FLORIDA — IN GOD WE TRUST

BUILDING OFFICIAL: _____

DATE: _____

EnergyGauge® (Version: FLRCPB v3.30)

FORM 600A-2001

SUMMER CALCULATIONS

Residential Whole Building Performance Method A - Details

ADDRESS: **Lot: 18, Sub: Stonehenge Ph2, Plat: , Lake City, FL, 32055-** PERMIT #:

BASE

GLASS TYPES .18 X Conditioned Floor Area	X BSPM	= Points
.18 1934.0	20.04	6976.3

WALL TYPES	Area X BSPM	= Points
Adjacent	0.0 0.00	0.0
Exterior	1491.0 1.70	2534.7
Base Total:	**1491.0**	**2534.7**

DOOR TYPES	Area X BSPM	= Points
Adjacent	21.0 2.40	50.4
Exterior	63.0 6.10	384.3
Base Total:	**84.0**	**434.7**

CEILING TYPES	Area X BSPM	= Points
Under Attic	1934.0 1.73	3345.8
Base Total:	**1934.0**	**3345.8**

FLOOR TYPES	Area X BSPM	= Points
Slab	228.0(p) -37.0	-8436.0
Raised	0.0 0.00	0.0
Base Total:		**-8436.0**

INFILTRATION	Area X BSPM	= Points
	1934.0 10.21	19746.1

AS-BUILT

Type/SC	Overhang Ornt	Len	Hgt	Area X	SPM X	SOF	= Points
Double, Clear	S	2.0	7.0	45.0	35.87	0.82	1323.7
Double, Clear	S	2.0	8.0	72.0	35.87	0.86	2211.0
Double, Clear	S	2.0	7.0	36.0	35.87	0.82	1059.0
Double, Clear	W	2.0	6.0	12.0	38.52	0.85	392.7
Double, Clear	N	2.0	7.0	36.0	19.20	0.92	637.4
Double, Clear	N	8.0	7.0	36.0	19.20	0.69	475.8
Double, Clear	E	2.0	5.0	12.0	42.06	0.80	402.2
As-Built Total:				**249.0**			**6501.9**

Type	R-Value	Area X	SPM	= Points
Frame, Wood, Exterior	11.0	1491.0	1.70	2534.7
As-Built Total:		**1491.0**		**2534.7**

Type	Area X	SPM	= Points
Exterior Insulated	21.0	4.10	86.1
Exterior Insulated	21.0	4.10	86.1
Exterior Insulated	21.0	4.10	86.1
Adjacent Insulated	21.0	1.60	33.6
As-Built Total:	**84.0**		**291.9**

Type	R-Value	Area X	SPM X SCM	= Points
Under Attic	30.0	1934.0	1.73 X 1.00	3345.8
As-Built Total:		**1934.0**		**3345.8**

Type	R-Value	Area X	SPM	= Points
Slab-On-Grade Edge Insulation	0.0	228.0(p	-41.20	-9393.6
As-Built Total:		**228.0**		**-9393.6**

Area X	SPM	= Points
1934.0	10.21	19746.1

SUMMER CALCULATIONS

Residential Whole Building Performance Method A - Details

ADDRESS: **Lot: 18, Sub: Stonehenge Ph2, Plat: , Lake City, FL, 32055-** PERMIT #:

BASE				AS-BUILT								
Summer Base Points:			**24601.7**	**Summer As-Built Points:**								**23026.8**
Total Summer Points	X System Multiplier	=	Cooling Points	Total Component	X Cap Ratio	X Duct Multiplier (DM x DSM x AHU)	X System Multiplier	X Credit Multiplier	= Cooling Points			
24601.7	**0.4266**		**10495.1**	23026.8 **23026.8**	1.000 **1.00**	(1.090 x 1.147 x 1.00) **1.250**	0.341 **0.341**	0.902 **0.902**	8867.6 **8867.6**			

FORM 600A-2001

WINTER CALCULATIONS

Residential Whole Building Performance Method A - Details

ADDRESS: **Lot: 18, Sub: Stonehenge Ph2, Plat: , Lake City, FL, 32055-** PERMIT #:

BASE

GLASS TYPES .18 X Conditioned Floor Area	X BWPM	= Points
.18 1934.0	12.74	4435.0

WALL TYPES	Area X BWPM	= Points
Adjacent	0.0 0.00	0.0
Exterior	1491.0 3.70	5516.7
Base Total:	**1491.0**	**5516.7**

DOOR TYPES	Area X BWPM	= Points
Adjacent	21.0 11.50	241.5
Exterior	63.0 12.30	774.9
Base Total:	**84.0**	**1016.4**

CEILING TYPES	Area X BWPM	= Points
Under Attic	1934.0 2.05	3964.7
Base Total:	**1934.0**	**3964.7**

FLOOR TYPES	Area X BWPM	= Points
Slab	228.0(p) 8.9	2029.2
Raised	0.0 0.00	0.0
Base Total:		**2029.2**

INFILTRATION	Area X BWPM	= Points
	1934.0 -0.59	-1141.1

AS-BUILT

Type/SC	Overhang Ornt	Len	Hgt	Area X	WPM X	WOF =	Points
Double, Clear	S	2.0	7.0	45.0	13.30	1.17	700.7
Double, Clear	S	2.0	8.0	72.0	13.30	1.12	1070.0
Double, Clear	S	2.0	7.0	36.0	13.30	1.17	560.5
Double, Clear	W	2.0	6.0	12.0	20.73	1.04	259.4
Double, Clear	N	2.0	7.0	36.0	24.58	1.00	887.7
Double, Clear	N	8.0	7.0	36.0	24.58	1.02	902.5
Double, Clear	E	2.0	5.0	12.0	18.79	1.08	244.3
As-Built Total:				**249.0**			**4625.2**

Type	R-Value	Area X	WPM	= Points
Frame, Wood, Exterior	11.0	1491.0	3.70	5516.7
As-Built Total:		**1491.0**		**5516.7**

Type	Area X	WPM	= Points
Exterior Insulated	21.0	8.40	176.4
Exterior Insulated	21.0	8.40	176.4
Exterior Insulated	21.0	8.40	176.4
Adjacent Insulated	21.0	8.00	168.0
As-Built Total:	**84.0**		**697.2**

Type	R-Value	Area X	WPM X WCM =	Points
Under Attic	30.0	1934.0	2.05 X 1.00	3964.7
As-Built Total:		**1934.0**		**3964.7**

Type	R-Value	Area X	WPM	= Points
Slab-On-Grade Edge Insulation	0.0	228.0(p	18.80	4286.4
As-Built Total:		**228.0**		**4286.4**

	Area X	WPM	= Points
	1934.0	-0.59	-1141.1

WINTER CALCULATIONS

Residential Whole Building Performance Method A - Details

ADDRESS: **Lot: 18, Sub: Stonehenge Ph2, Plat: , Lake City, FL, 32055-** PERMIT #:

BASE			AS-BUILT								
Winter Base Points:		**15821.0**	**Winter As-Built Points:**								**17949.1**
Total Winter Points	X System Multiplier	= Heating Points	Total Component	X Cap Ratio	X Duct Multiplier (DM x DSM x AHU)	X System Multiplier	X Credit Multiplier	= Heating Points			
15821.0	**0.6274**	**9926.1**	17949.1 **17949.1**	1.000 **1.00**	(1.069 x 1.169 x 1.00) **1.250**	0.432 **0.432**	0.950 **0.950**	9197.8 **9197.8**			

FORM 600A-2001

WATER HEATING & CODE COMPLIANCE STATUS

Residential Whole Building Performance Method A - Details

ADDRESS: **Lot: 18, Sub: Stonehenge Ph2, Plat: , Lake City, FL, 32055-** PERMIT #:

BASE				AS-BUILT							
WATER HEATING											
Number of Bedrooms	X	Multiplier	= Total	Tank Volume	EF	Number of Bedrooms	X Tank Ratio	X Multiplier	X Credit Multiplier	= Total	
3		2746.00	8238.0	30.0	0.90	3	1.00	2684.98	1.00	8054.9	
				As-Built Total:						**8054.9**	

CODE COMPLIANCE STATUS

BASE				AS-BUILT			
Cooling Points +	Heating Points +	Hot Water Points =	Total Points	Cooling Points +	Heating Points +	Hot Water Points =	Total Points
10495	**9926**	**8238**	**28659**	**8868**	**9198**	**8055**	**26120**

PASS

FORM 600A-2001

Code Compliance Checklist

Residential Whole Building Performance Method A - Details

ADDRESS: **Lot: 18, Sub: Stonehenge Ph2, Plat: , Lake City, FL, 32055-** PERMIT #:

6A-21 INFILTRATION REDUCTION COMPLIANCE CHECKLIST

COMPONENTS	SECTION	REQUIREMENTS FOR EACH PRACTICE	CHECK
Exterior Windows & Doors	606.1.ABC.1.1	Maximum:.3 cfm/sq.ft. window area; .5 cfm/sq.ft. door area.	✓
Exterior & Adjacent Walls	606.1.ABC.1.2.1	Caulk, gasket, weatherstrip or seal between: windows/doors & frames, surrounding wall; foundation & wall sole or sill plate; joints between exterior wall panels at corners; utility penetrations; between wall panels & top/bottom plates; between walls and floor. EXCEPTION: Frame walls where a continuous infiltration barrier is installed that extends from, and is sealed to, the foundation to the top plate.	✓
Floors	606.1.ABC.1.2.2	Penetrations/openings >1/8" sealed unless backed by truss or joint members. EXCEPTION: Frame floors where a continuous infiltration barrier is installed that is sealed to the perimeter, penetrations and seams.	✓
Ceilings	606.1.ABC.1.2.3	Between walls & ceilings; penetrations of ceiling plane of top floor; around shafts, chases, soffits, chimneys, cabinets sealed to continuous air barrier; gaps in gyp board & top plate; attic access. EXCEPTION: Frame ceilings where a continuous infiltration barrier is installed that is sealed at the perimeter, at penetrations and seams.	✓
Recessed Lighting Fixtures	606.1.ABC.1.2.4	Type IC rated with no penetrations, sealed; or Type IC or non-IC rated, installed inside a sealed box with 1/2" clearance & 3" from insulation; or Type IC rated with < 2.0 cfm from conditioned space, tested.	✓
Multi-story Houses	606.1.ABC.1.2.5	Air barrier on perimeter of floor cavity between floors.	N/A
Additional Infiltration reqts	606.1.ABC.1.3	Exhaust fans vented to outdoors, dampers; combustion space heaters comply with NFPA, have combustion air.	✓

6A-22 OTHER PRESCRIPTIVE MEASURES (must be met or exceeded by all residences.)

COMPONENTS	SECTION	REQUIREMENTS	CHECK
Water Heaters	612.1	Comply with efficiency requirements in Table 6-12. Switch or clearly marked circuit breaker (electric) or cutoff (gas) must be provided. External or built-in heat trap required.	✓
Swimming Pools & Spas	612.1	Spas & heated pools must have covers (except solar heated). Non-commercial pools must have a pump timer. Gas spa & pool heaters must have a minimum thermal efficiency of 78%.	N/A
Shower heads	612.1	Water flow must be restricted to no more than 2.5 gallons per minute at 80 PSIG.	✓
Air Distribution Systems	610.1	All ducts, fittings, mechanical equipment and plenum chambers shall be mechanically attached, sealed, insulated, and installed in accordance with the criteria of Section 610. Ducts in unconditioned attics: R-6 min. insulation.	✓
HVAC Controls	607.1	Separate readily accessible manual or automatic thermostat for each system.	✓
Insulation	604.1, 602.1	Ceilings-Min. R-19. Common walls-Frame R-11 or CBS R-3 both sides. Common ceiling & floors R-11.	✓

CERTIFICATE OF

OCCUPANCY

COLUMBIA COUNTY, FLORIDA

Department of Building and Zoning Inspection

This Certificate of Occupancy is issued to the below named permit holder for the building and premises at the below named location, and certifies that the work has been completed in accordance with the Columbia County Building Code.

Parcel Number 23-4S-16-03099-218 **Building permit No.** 000023756

Use Classification SFD,UTILITY **Fire:** 23.68

Permit Holder JONATHAN PERRY **Waste:** 49.00

Owner of Building DONNY WILLIAMS **Total:** 72.68

Location: 217 SW LANCELOT GLEN(STONEHENGE,LOT 18)

Date: 06/19/2006

Building Inspector

POST IN A CONSPICUOUS PLACE
(Business Places Only)

Notice of Intent for Preventative Treatment for Termites

(As required by Florida Building Code 104.2.6)

Date: 11-7-05

Lot 18 Phase II Stonehinge

(Address of Treatment or Lot/Block of Treatment)

Columbia / Lake Cty

City

Florida Pest Control & Chemical Co.

www.flapest.com

Product to be used: Bora-Care Termiticide (Wood Treatment)

Chemical to be used: 23% Disodium Octaborate Tetrahydrate

Application will be performed onto structural wood at dried-in stage of construction. Bora-Care Termiticide application shall be applied according to EPA registered label directions as stated in the Florida Building Code Section 1861.1.8

(Information to be provided to local building code offices prior to concrete foundation installation.)

6/04 ©

Notice of Treatment

11850

Applicator: Florida Pest Control & Chemical Co. (www.flapest .com)

Address: BAYAUE

City L C Phone 752 1703

Site Location: Subdivision Stonehinge

Lot # ? Block# Permit # NOS 23756

Address 217 SW Camelot

Product used	Active Ingredient	% Concentration
☐ Premise	Imidacloprid	0.1%
☐ Termidor	Fipronil	0.12%
☑ Bora-Care	Disodium Octaborate Tetrahydrate	23.0%

Type treatment: ☐ Soil ☑ Wood

Area Treated	Square feet	Linear feet	Gallons Applied
Dwelling	3188	750	4

As per Florida Building Code 104.2.6 – If soil chemical barrier method for termite prevention is used, final exterior treatment shall be completed prior to final building approval.

If this notice is for the final exterior treatment, initial this line _____.

3-10-06	1500	F254
Date	Time	Print Technician's Name

Remarks: _____

Applicator - White Permit File - Canary Permit Holder - Pink

10/05 ©