DATE 02/28/2012

Columbia County Building Permit

This Permit Must Be Prominently Posted on Premises During Construction

PERMIT
000029967

APPLICANT RICHARD J. KEEN PHONE 386.365.5999

ADDRESS 134 SW MAIN BLVD. LAKE CITY FL 32025

OWNER BETTY MURPHY PHONE 386.758.8911

ADDRESS 650 SW MAIN BLVD. LAKE CITY FL 32055

CONTRACTOR JAMES H. JOHNSTON,III. PHONE 386.365.5999

LOCATION OF PROPERTY N. MARION AVENUE TO C-100-A,TL TO OAKLAND,TR TO HENSLEY,TL
2ND. HOME ON L.

TYPE DEVELOPMENT SFD/UTILITY ESTIMATED COST OF CONSTRUCTION 43200.00

HEATED FLOOR AREA 864.00 TOTAL AREA 864.00 HEIGHT 15.00 STORIES 1

FOUNDATION CONC WALLS FRAMED ROOF PITCH 6'12 FLOOR CONC

LAND USE & ZONING RSF-MH-2 MAX. HEIGHT 35

Minimum Set Back Requirments: STREET-FRONT 25.00 REAR 15.00 SIDE 10.00

NO. EX.D.U. 0 FLOOD ZONE X DEVELOPMENT PERMIT NO.

PARCEL ID 29-3S-17-11634-000 SUBDIVISION THOMPSON(NW DIVISION)

LOT 7 BLOCK I PHASE UNIT TOTAL ACRES 0.11

Culvert Permit No.	Culvert Waiver	Contractor's License Number	Applicant/Owner/Contractor	
		CRC1328128		
EXISTING	12-0087-E	BLK	TC	N
Driveway Connection	Septic Tank Number	LU & Zoning checked by	Approved for Issuance	New Resident

COMMENTS: 1 FOOT ABOVE ROAD.

Check # or Cash 3916

FOR BUILDING & ZONING DEPARTMENT ONLY

(footer/Slab)

Temporary Power _____ date/app. by Foundation _____ date/app. by Monolithic _____ date/app. by

Under slab rough-in plumbing _____ date/app. by Slab _____ date/app. by Sheathing/Nailing _____ date/app. by

Framing _____ date/app. by Insulation _____ date/app. by

Rough-in plumbing above slab and below wood floor _____ date/app. by Electrical rough-in _____ date/app. by

Heat & Air Duct _____ date/app. by Peri. beam (Lintel) _____ date/app. by Pool _____ date/app. by

Permanent power _____ date/app. by C.O. Final _____ date/app. by Culvert _____ date/app. by

Pump pole _____ date/app. by Utility Pole _____ date/app. by M/H tie downs, blocking, electricity and plumbing _____ date/app. by

Reconnection _____ date/app. by RV _____ date/app. by Re-roof _____ date/app. by

BUILDING PERMIT FEE $ 220.00 CERTIFICATION FEE $ 4.32 SURCHARGE FEE $ 4.32

MISC. FEES $ 0.00 ZONING CERT. FEE $ 50.00 FIRE FEE $ 0.00 WASTE FEE $

FLOOD DEVELOPMENT FEE $ FLOOD ZONE FEE $ 25.00 CULVERT FEE $ **TOTAL FEE** 303.64

INSPECTORS OFFICE CLERKS OFFICE

NOTICE: IN ADDITION TO THE REQUIREMENTS OF THIS PERMIT, THERE MAY BE ADDITIONAL RESTRICTIONS APPLICABLE TO THIS PROPERTY THAT MAY BE FOUND IN THE PUBLIC RECORDS OF THIS COUNTY. AND THERE MAY BE ADDITIONAL PERMITS REQUIRED FROM OTHER GOVERNMENTAL ENTITIES SUCH AS WATER MANAGEMENT DISTRICTS, STATE AGENCIES, OR FEDERAL AGENCIES.

"WARNING TO OWNER: YOUR FAILURE TO RECORD A NOTICE OF COMMENCEMENT MAY RESULT IN YOUR PAYING TWICE FOR IMPROVEMENTS TO YOUR PROPERTY. IF YOU INTEND TO OBTAIN FINANCING, CONSULT WITH YOUR LENDER OR AN ATTORNEY BEFORE RECORDING YOUR NOTICE OF COMMENCEMENT."

EVERY PERMIT ISSUED SHALL BECOME INVALID UNLESS THE WORK AUTHORIZED BY SUCH PERMIT IS COMMENCED WITHIN 180 DAYS AFTER ITS ISSUANCE, OR IF THE WORK AUTHORIZED BY SUCH PERMIT IS SUSPENDED OR ABANDONED FOR A PERIOD OF 180 DAYS AFTER THE TIME THE WORK IS COMMENCED. A VALID PERMIT RECIEVES AN APPROVED INSPECTION EVERY 180 DAYS. WORK SHALL BE CONSIDERED NOT SUSPENDED, ABANDONED OR INVALID WHEN THE PERMIT HAS RECIEVED AN APPROVED INSPECTION WITHIN 180 DAYS OT THE PREVIOUS INSPECTION.

The Issuance of this Permit Does Not Waive Compliance by Permittee with Deed Restrictions.

CERTIFICATE OF

OCCUPANCY

COLUMBIA COUNTY, FLORIDA

Department of Building and Zoning Inspection

This Certificate of Occupancy is issued to the below named permit holder for the building and premises at the below named location, and certifies that the work has been completed in accordance with the Columbia County Building Code.

Parcel Number 29-3S-17-11634-000 **Building permit No.** 000029967

Use Classification SFD/UTILITY **Fire:** 0.00

Permit Holder JAMES H. JOHNSTON,III. **Waste:**

Owner of Building BETTY MURPHY **Total:** 0.00

Location: 134 NW HENSLEY GLEN,LAKE CITY, FL 32055

Date: 05/02/2012

Tracy Crew

Building Inspector

POST IN A CONSPICUOUS PLACE
(Business Places Only)

H signed set plans

Columbia County Building Permit Application

☑ PERKINS, W.C & ASS.

For Office Use Only Application # 1202-39 Date Received 2/26 By JW Permit # 29967

Zoning Official BLK Date 28 FEB 2012 Flood Zone X Land Use RESIDENTIAL Zoning RSF/MH-2

FEMA Map # N/A Elevation N/A MFE 1' below Rd River N/A Plans Examiner J.C. Date 2-22-12

Comments

☐ NOC ☑ EH ☐ Deed or PA ☑ Site Plan ☐ State Road Info ☑ Well letter (CITY WATER) ☑ 911 Sheet ☐ Parent Parcel #

☐ Dev Permit # ☐ In Floodway ☑ Letter of Auth. from Contractor ☐ F W Comp. letter

IMPACT FEES: EMS Fire Corr (ON file) ☑ Sub VF Form

Road/Code School = TOTAL (Suspended) ☑ App Fee Paid

Septic Permit No. 12-0087-E

Fax

Name Authorized Person Signing Permit James Johnston Phone 365-5999

Address 650 SW Main Blvd Lake City FL 32025

Owners Name Betty Murphy Phone 758-8911

911 Address 134 NW Hensley Glen Lake City FL 32055

Contractors Name James Johnston Phone 365-5999

Address 650 SW Main Blvd Lake City FL 32025

Fee Simple Owner Name & Address

Bonding Co. Name & Address

Architect/Engineer Name & Address Mark Disosway

Mortgage Lenders Name & Address "CDBG"

Circle the correct power company - FL Power & Light - Clay Elec. - Suwannee Valley Elec. - Progress Energy

Property ID Number 00-00-00-11634-000 Estimated Cost of Construction 48,000.00

Subdivision Name Thompson S/D Lot 7 Block 1 Unit Phase

Driving Directions Marion St. North to 100A turn Left go to Oakland St. turn right go to Hensley Glen turn Left 2d home on left.

Number of Existing Dwellings on Property 0

Construction of SFD Total Acreage .114 Lot Size

Do you need a - Culvert Permit or Culvert Waiver or Have an Existing Drive Total Building Height 15'2"

Actual Distance of Structure from Property Lines - Front 30 Side 10 Side 10 Rear 40

Number of Stories 1 Heated Floor Area 864 Total Floor Area 864 Roof Pitch 6/12

Application is hereby made to obtain a permit to do work and installations as indicated. I certify that no work or installation has commenced prior to the issuance of a permit and that all work be performed to meet the standards of all laws regulating construction in this jurisdiction. **CODE:** Florida Building Code 2007 with 2009 Supplements and the 2008 National Electrical Code.

TIME LIMITATIONS OF APPLICATION : An application for a permit for any proposed work shall be deemed to have been abandoned 180 days after the date of filing, unless such application has been pursued in good faith or a permit has been issued; except that the building official is authorized to grant one or more extensions of time for additional periods not exceeding 90 days each. The extension shall be requested in writing and justifiable cause demonstrated.

TIME LIMITATIONS OF PERMITS: Every permit issued shall become invalid unless the work authorized by such permit is commenced within 180 days after its issuance, or if the work authorized by such permit is suspended or abandoned for a period of 180 days after the time work is commenced. A valid permit receives an approved inspection every 180 days. Work shall be considered not suspended, abandoned or invalid when the permit has received an approved inspection within 180 days of the previous approved inspection.

FLORIDA'S CONSTRUCTION LIEN LAW: Protect Yourself and Your Investment: According to Florida Law, those who work on your property or provide materials, and are not paid-in-full, have a right to enforce their claim for payment against your property. This claim is known as a construction lien. If your contractor fails to pay subcontractors or material suppliers or neglects to make other legally required payments, the people who are owed money may look to your property for payment, even if you have paid your contractor in full. This means if a lien is filed against your property, it could be sold against your will to pay for labor, materials or other services which your contractor may have failed to pay.

NOTICE OF RESPONSIBILITY TO BUILDING PERMITEE: ***YOU ARE HEREBY NOTIFIED*** as the recipient of a building permit from Columbia County, Florida, you will be held responsible to the County for any damage to sidewalks and/or road curbs and gutters, concrete features and structures, together with damage to drainage facilities, removal of sod, major changes to lot grades that result in ponding of water, or other damage to roadway and other public infrastructure facilities caused by you or your contractor, subcontractors, agents or representatives in the construction and/or improvement of the building and lot for which this permit is issued. No certificate of occupancy will be issued until all corrective work to these public infrastructures and facilities has been corrected.

WARNING TO OWNER: YOUR FAILURE TO RECORD A NOTICE OF COMMENCMENT MAY RESULT IN YOU PAYING TWICE FOR IMPROVEMENTS TO YOUR PROPERTY. A NOTICE OF COMMENCEMENT MUST BE RECORDED AND POSTED ON THE JOB SITE BEFORE THE FIRST INSPECTION. IF YOU INTEND TO OBTAIN FINANCING, CONSULT WITH YOUR LENDER OR ATTORNEY BEFORE RECORDING YOUR NOTICE OF COMMENCEMENT.

OWNERS CERTIFICATION: I CERTIFY THAT ALL THE FOREGOING INFORMATION IS ACCURATE AND THAT ALL WORK WILL BE DONE IN COMPLIANCE WITH ALL APPLICABLE LAWS REGULATING CONSTRUCTION AND ZONING.

NOTICE TO OWNER: There are some properties that may have deed restrictions recorded upon them. These restrictions may limit or prohibit the work applied for in your building permit. You must verify if your property is encumbered by any restrictions or face possible litigation and or fines.

(Owners Must Sign All Applications Before Permit Issuance.)

* Betty Mohl Pho

Owners Signature ****OWNER BUILDERS MUST PERSONALLY APPEAR AND SIGN THE BUILDING PERMIT.**

CONTRACTORS AFFIDAVIT: By my signature I understand and agree that I have informed and provided this written statement to the owner of all the above written responsibilities in Columbia County for obtaining this Building Permit including all application and permit time limitations.

Contractor's Signature (Permitee)

Contractor's License Number CRC 1328128
Columbia County
Competency Card Number 486 - Computer

Affirmed under penalty of perjury to by the Contractor and subscribed before me this 16th **day of** Feb **20** 12

Personally known X **or Produced Identification** _____

Carey F Chandler

State of Florida Notary Signature (For the Contractor)

SEAL: NOTARY PUBLIC STATE OF FLORIDA
CAREY F. CHANDLER
MY COMMISSION # DD 866347
EXPIRES: May 22, 2013
Bonded Thru Budget Notary Services

Residential System Sizing Calculation

Summary

Murphy Res

, FL

Project Title:
1201073

Class 3 Rating
Registration No. 0
Climate: North

2/1/2012

Location for weather data: Gainesville - Defaults: Latitude(29) Altitude(152 ft.) Temp Range(M)
Humidity data: Interior RH (50%) Outdoor wet bulb (77F) Humidity difference(54gr.)

Winter design temperature	33	F	Summer design temperature	92	F
Winter setpoint	70	F	Summer setpoint	75	F
Winter temperature difference	37	F	Summer temperature difference	17	F
Total heating load calculation	**17237**	**Btuh**	**Total cooling load calculation**	**14983**	**Btuh**
Submitted heating capacity	% of calc	Btuh	Submitted cooling capacity	% of calc	Btuh
Total (Electric Heat Pump)	116.0	20000	Sensible (SHR = 0.75)	132.0	15000
Heat Pump + Auxiliary(0.0kW)	116.0	20000	Latent	138.1	5000
			Total (Electric Heat Pump)	133.5	20000

WINTER CALCULATIONS

Winter Heating Load (for 864 sqft)

Load component			Load	
Window total	54	sqft	1738	Btuh
Wall total	850	sqft	2791	Btuh
Door total	40	sqft	518	Btuh
Ceiling total	864	sqft	1018	Btuh
Floor total	118	sqft	5152	Btuh
Infiltration	149	cfm	6020	Btuh
Duct loss			0	Btuh
Subtotal			**17237**	**Btuh**
Ventilation	0	cfm	0	Btuh
TOTAL HEAT LOSS			**17237**	**Btuh**

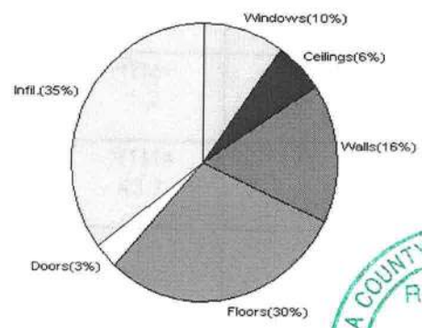

COLUMBIA COUNTY BUILDING DEPT.
Received for
FILE COPY
Code Compliance
PLANS EXAMINER

SUMMER CALCULATIONS

Summer Cooling Load (for 864 sqft)

Load component			Load	
Window total	54	sqft	3010	Btuh
Wall total	850	sqft	1773	Btuh
Door total	40	sqft	392	Btuh
Ceiling total	864	sqft	1431	Btuh
Floor total			0	Btuh
Infiltration	77	cfm	1436	Btuh
Internal gain			3320	Btuh
Duct gain			0	Btuh
Sens. Ventilation	0	cfm	0	Btuh
Total sensible gain			**11362**	**Btuh**
Latent gain(ducts)			0	Btuh
Latent gain(infiltration)			2821	Btuh
Latent gain(ventilation)			0	Btuh
Latent gain(internal/occupants/other)			800	Btuh
Total latent gain			**3621**	**Btuh**
TOTAL HEAT GAIN			**14983**	**Btuh**

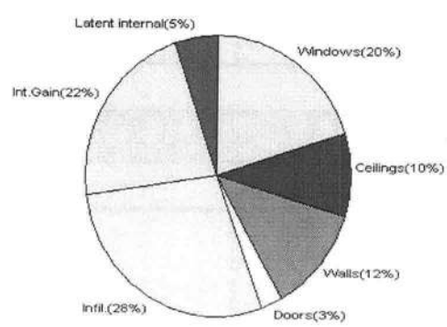

Powered by ACCA MANUAL J

For Florida residences only

EnergyGauge® System Sizing
PREPARED BY: _____
DATE: 2012-02-01

Manual J Winter Calculations

Residential Load - Component Details (continued)

Murphy Res

, FL

Project Title:
1201073

Class 3 Rating
Registration No. 0
Climate: North

Key: Window types (SHGC - Shading coefficient of glass as SHGC numerical value or as clear or
(Frame types - metal, wood or insulated metal)
(U - Window U-Factor or 'DEF' for default)
(HTM - ManualJ Heat Transfer Multiplier)
Key: Floor size (perimeter(p) for slab-on-grade or area for all other floor types)

For Florida residences only

System Sizing Calculations - Summer

Residential Load - Whole House Component Details

Murphy Res
, FL

Project Title:
1201073

Class 3 Rating
Registration No. 0
Climate: North

Reference City: Gainesville (Defaults) Summer Temperature Difference: 17.0 F 2/1/2012

This calculation is for Worst Case. The house has been rotated 315 degrees.

Component Loads for Whole House

Window	Type* Pn/SHGC/U/InSh/ExSh/IS	Ornt	Overhang Len	Overhang Hgt	Window Area(sqft) Gross	Shaded	Unshaded	HTM Shaded	HTM Unshaded	Load
1	2, Clear, 0.87, None,N,N	NW	1.5ft	6ft.	15.0	0.0	15.0	29	60	901 Btuh
2	2, Clear, 0.87, None,N,N	NE	1.5ft	4ft.	9.0	0.0	9.0	29	60	540 Btuh
3	2, Clear, 0.87, None,N,N	SE	1.5ft	6ft.	30.0	9.1	20.9	29	63	1569 Btuh
	Window Total				54 (sqft)					3010 Btuh

Walls	Type	R-Value/U-Value	Area(sqft)	HTM	Load
1	Frame - Wood - Ext	13.0/0.09	850.0	2.1	1773 Btuh
	Wall Total		850 (sqft)		1773 Btuh
Doors	Type		Area (sqft)	HTM	Load
1	Insulated - Exterior		40.0	9.8	392 Btuh
	Door Total		40 (sqft)		392 Btuh
Ceilings	Type/Color/Surface	R-Value	Area(sqft)	HTM	Load
1	Vented Attic/DarkShingle	30.0	864.0	1.7	1431 Btuh
	Ceiling Total		864 (sqft)		1431 Btuh
Floors	Type	R-Value	Size	HTM	Load
1	Slab On Grade	0.0	118 (ft(p))	0.0	0 Btuh
	Floor Total		118.0 (sqft)		0 Btuh
			Zone Envelope Subtotal:		6606 Btuh

Infiltration	Type	ACH	Volume(cuft)	CFM=	Load
	SensibleNatural	0.67	6912	77.2	1436 Btuh
Internal gain		Occupants	Btuh/occupant	Appliance	Load
		4	X 230 +	2400	3320 Btuh
Duct load	Partially sealed, R6.0, Supply(Attic), Return(Attic)			DGM = 0.00	0.0 Btuh
				Sensible Zone Load	**11362 Btuh**

Manual J Summer Calculations

Residential Load - Component Details (continued)

Murphy Res

, FL

Project Title:
1201073

Class 3 Rating
Registration No. 0
Climate: North

2/1/2012

WHOLE HOUSE TOTALS

Whole House Totals for Cooling	**Sensible Envelope Load All Zones**	**11362 Btuh**
	Sensible Duct Load	0 Btuh
	Total Sensible Zone Loads	**11362 Btuh**
	Sensible ventilation	0 Btuh
	Blower	0 Btuh
	Total sensible gain	**11362 Btuh**
	Latent infiltration gain (for 54 gr. humidity difference)	2821 Btuh
	Latent ventilation gain	0 Btuh
	Latent duct gain	0 Btuh
	Latent occupant gain (4 people @ 200 Btuh per person)	800 Btuh
	Latent other gain	0 Btuh
	Latent total gain	**3621 Btuh**
	TOTAL GAIN	**14983 Btuh**

*Key: Window types (Pn - Number of panes of glass)
(SHGC - Shading coefficient of glass as SHGC numerical value or as clear or tint)
(U - Window U-Factor or 'DEF' for default)
(InSh - Interior shading device: none(N), Blinds(B), Draperies(D) or Roller Shades(R))
(ExSh - Exterior shading device: none(N) or numerical value)
(BS - Insect screen: none(N), Full(F) or Half(H))
(Ornt - compass orientation)

For Florida residences only

PRODUCT APPROVAL SPECIFICATION SHEET

Location: 134 NW Hensley Glen Project Name: Betty Murphy

As required by Florida Statute 553.842 and Florida Administrative Code 9B-72, please provide the information and th product approval number(s) on the building components listed below if they will be utilized on the construction projec which you are applying for a building permit on or after April 1, 2004. We recommend you contact your local produc supplier should you not know the product approval number for any of the applicable listed products. More informatic about statewide product approval can be obtained at www.floridabuilding.org

Category/Subcategory	Manufacturer	Product Description	Approval Numb
A. EXTERIOR DOORS			FL 4242 -
1. Swinging			
2. Sliding			
3. Sectional			
4. Roll up			
5. Automatic			
6. Other			
B. WINDOWS			
1. Single hung			FL 5108
2. Horizontal Slider			FL. 5451
3. Casement			
4. Double Hung			
5. Fixed			FL. 5418
6. Awning			
7. Pass -through			
8. Projected			
9. Mullion			
10. Wind Breaker			
11 Dual Action			
12. Other			
C. PANEL WALL			
1. Siding			FL. 889-R
2. Soffits			FL 4899
3. EIFS			
4. Storefronts			
5. Curtain walls			
6. Wall louver			
7. Glass block			FL 3820-R
8. Membrane			
9. Greenhouse			
10. Other			
D. ROOFING PRODUCTS			
1. Asphalt Shingles		FL 5444	FL. 586-R2
2. Underlayments			FL 1814-R1
3. Roofing Fasteners			
4. Non-structural Metal Rf			FL 7518.1
5. Built-Up Roofing			
6. Modified Bitumen			
7. Single Ply Roofing Sys			
8. Roofing Tiles			
9. Roofing Insulation			
10. Waterproofing			
11. Wood shingles /shakes			
12. Roofing Slate			

COLUMBIA COUNTY BUILDING DEPARTMENT
Received for FILE COPY
Code Compliance
PLANS EXAMINER

PRODUCT APPROVAL SPECIFICATION SHEET

Location: 134 NW Hensley Glen Project Name: Betty Murphy

As required by Florida Statute 553.842 and Florida Administrative Code 9B-72, please provide the information and th product approval number(s) on the building components listed below if they will be utilized on the construction project which you are applying for a building permit on or after April 1, 2004. We recommend you contact your local product supplier should you not know the product approval number for any of the applicable listed products. More informatio about statewide product approval can be obtained at www.floridabuilding.org

Category/Subcategory	Manufacturer	Product Description	Approval Numbe
A. EXTERIOR DOORS			FL 4242 -
1. Swinging			
2. Sliding			
3. Sectional			
4. Roll up			
5. Automatic			
6. Other			
B. WINDOWS			
1. Single hung			FL 5108
2. Horizontal Slider			FL 5451
3. Casement			
4. Double Hung			
5. Fixed			FL 5418
6. Awning			
7. Pass -through			
8. Projected			
9. Mullion			
10. Wind Breaker			
11 Dual Action			
12. Other			
C. PANEL WALL			
1. Siding			FL 889-R
2. Soffits			FL 4899
3. EIFS			
4. Storefronts			
5. Curtain walls			
6. Wall louver			
7. Glass block			FL 3820-R
8. Membrane			
9. Greenhouse			
10. Other			
D. ROOFING PRODUCTS			
1. Asphalt Shingles		FL 5444	FL 586-R2
2. Underlayments			FL 1814-R1
3. Roofing Fasteners			
4. Non-structural Metal Rf			FL 7518.1
5. Built-Up Roofing			
6. Modified Bitumen			
7. Single Ply Roofing Sys			
8. Roofing Tiles			
9. Roofing Insulation			
10. Waterproofing			
11. Wood shingles /shakes			
12. Roofing Slate			

Betty Murphy Replacement Home

Based on site visits to the existing home of Betty Murphy located at 134 NW Hensley Glen, Lake City, Florida and the Property Appraiser's property card indicating the dimensions of the existing house, it did not meet the current requirements for side setbacks. The proposed location of the replacement home is not believed to encroach any further than the previously existing home.

Signed: _____

Jimmy Johnson or Richard Keen

Witnesses:

_____

_____

Betty Murphy

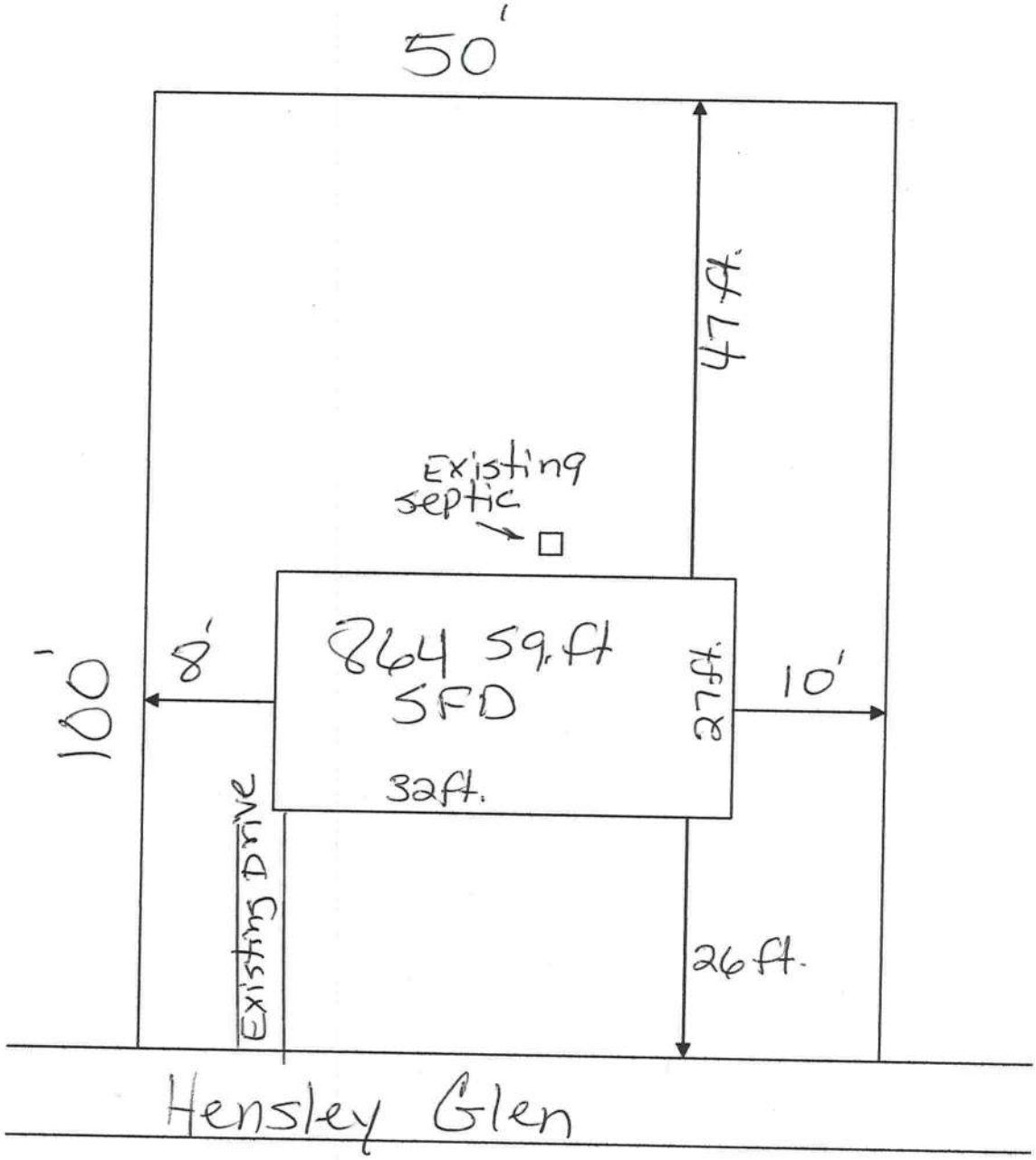

Columbia County Property Appraiser

DB Last Updated: 1/17/2012

2011 Tax Year

Tax Collector | Tax Estimator | Property Card | Parcel List Generator | Interactive GIS Map | Print

Parcel: 00-00-00-11634-000

<< Next Lower Parcel | Next Higher Parcel >>

Search Result: 1 of 1

Owner & Property Info

Owner's Name	MURPHY BETTY &		
Mailing Address	BYRD MARTHA (JTWRS) 134 NW HENSLEY GLN LAKE CITY, FL 32055		
Site Address	134 NW HENSLEY GLN		
Use Desc. (code)	SINGLE FAM (000100)		
Tax District	2 (County)	**Neighborhood**	820317
Land Area	0.114 ACRES	**Market Area**	06
Description	NOTE: This description is not to be used as the Legal Description for this parcel in any legal transaction.		

NW DIV:LOT 7 BLOCK I THOMPSON S/D. ORB 799-1500, 827-2570, 934-163, 953-2330 JTWRS,

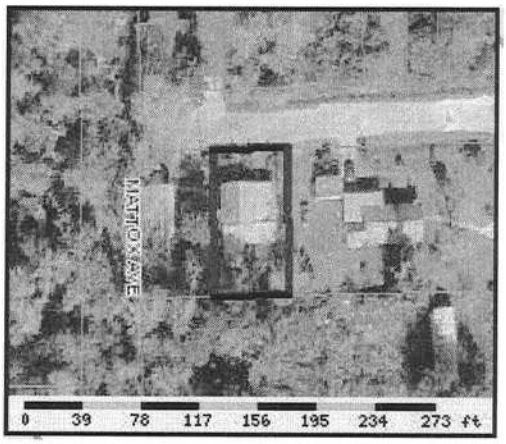

Property & Assessment Values

2011 Certified Values		
Mkt Land Value	cnt: (0)	$2,500.00
Ag Land Value	cnt: (1)	$0.00
Building Value	cnt: (1)	$31,179.00
XFOB Value	cnt: (0)	$0.00
Total Appraised Value		$33,679.00
Just Value		$33,679.00
Class Value		$0.00
Assessed Value		$14,933.00
Exempt Value	(code: HX)	$14,933.00
Total Taxable Value		Cnty: $0 Other: $0 | Schl: $0

2012 Working Values

NOTE:
2012 Working Values are NOT certified values and therefore are subject to change before being finalized for ad valorem assessment purposes.

Show Working Values

Sales History

Show Similar Sales within 1/2 mile

Sale Date	OR Book/Page	OR Code	Vacant / Improved	Qualified Sale	Sale RCode	Sale Price
5/20/2002	953/2330	WD	I	U	01	$100.00
8/24/2001	934/163	WD	I	U	01	$100.00
12/22/1994	799/1500	AG	I	U	13	$4,200.00

Building Characteristics

Bldg Item	Bldg Desc	Year Blt	Ext. Walls	Heated S.F.	Actual S.F.	Bldg Value
1	SINGLE FAM (000100)	1950	(31)	1364	1564	$31,179.00
	Note: All S.F. calculations are based on exterior building dimensions.					

Extra Features & Out Buildings

Code	Desc	Year Blt	Value	Units	Dims	Condition (% Good)
NONE						

Land Breakdown

Lnd Code	Desc	Units	Adjustments	Eff Rate	Lnd Value

ITW Building Components Group, Inc.

1950 Marley Drive Haines City, FL 33844
Florida Engineering Certificate of Authorization Number: 0 278
Florida Certificate of Product Approval # FL1999
 Document ID:1UJ6487-Z0330142901

WALTER P. FINN LICENSE No. 22839 STATE OF FLORIDA PROFESSIONAL ENGINEER
01/30/2012

Truss Fabricator:	Anderson Truss Company
Job Identification:	12-018--Fill in later HOMETOWN HOMES/MURPHY -- , **
Truss Count:	10
Model Code:	Florida Building Code 2007 and 2009 Supplement
Truss Criteria:	FBC2007Res/TPI-2002(STD)
Engineering Software:	Alpine Software,Version 10.03.
Structural Engineer of Record:	The identity of the structural EOR did not exist as of
Address:	the seal date per section 61G15-31.003(5a) of the FAC
Minimum Design Loads:	Roof - 40.0 PSF @ 1.25 Duration
	Floor - N/A
	Wind - 110 MPH ASCE 7-05 -Closed

Notes:

1. Determination as to the suitability of these truss components for the structure is the responsibility of the building designer/engineer of record, as defined in ANSI/TPI 1
2. The drawing date shown on this index sheet must match the date shown on the individual truss component drawing.
3. As shown on attached drawings; the drawing number is preceded by: HCUSR487

Walter P. Finn
-Truss Design Engineer-

1950 Marley Drive
Haines City, FL 33844

Details: -

#	Ref Description	Drawing#	Date
1	81102--H7A	12030043	01/30/12
2	81103--H9A	12030038	01/30/12
3	81104--H11A	12030039	01/30/12
4	81105--H13A	12030040	01/30/12
5	81106--A	12030041	01/30/12
6	81107--CJ1	12030044	01/30/12
7	81108--CJ3	12030042	01/30/12
8	81109--CJ5	12030045	01/30/12
9	81110--EJ7	12030046	01/30/12
10	81111--HJ7	12030047	01/30/12

COLUMBIA COUNTY BUILDING DEPARTMENT Received for FILE COPY Code Compliance PLANS EXAMINER

Roof Plane Sheathing Area = 1174 sq. ft

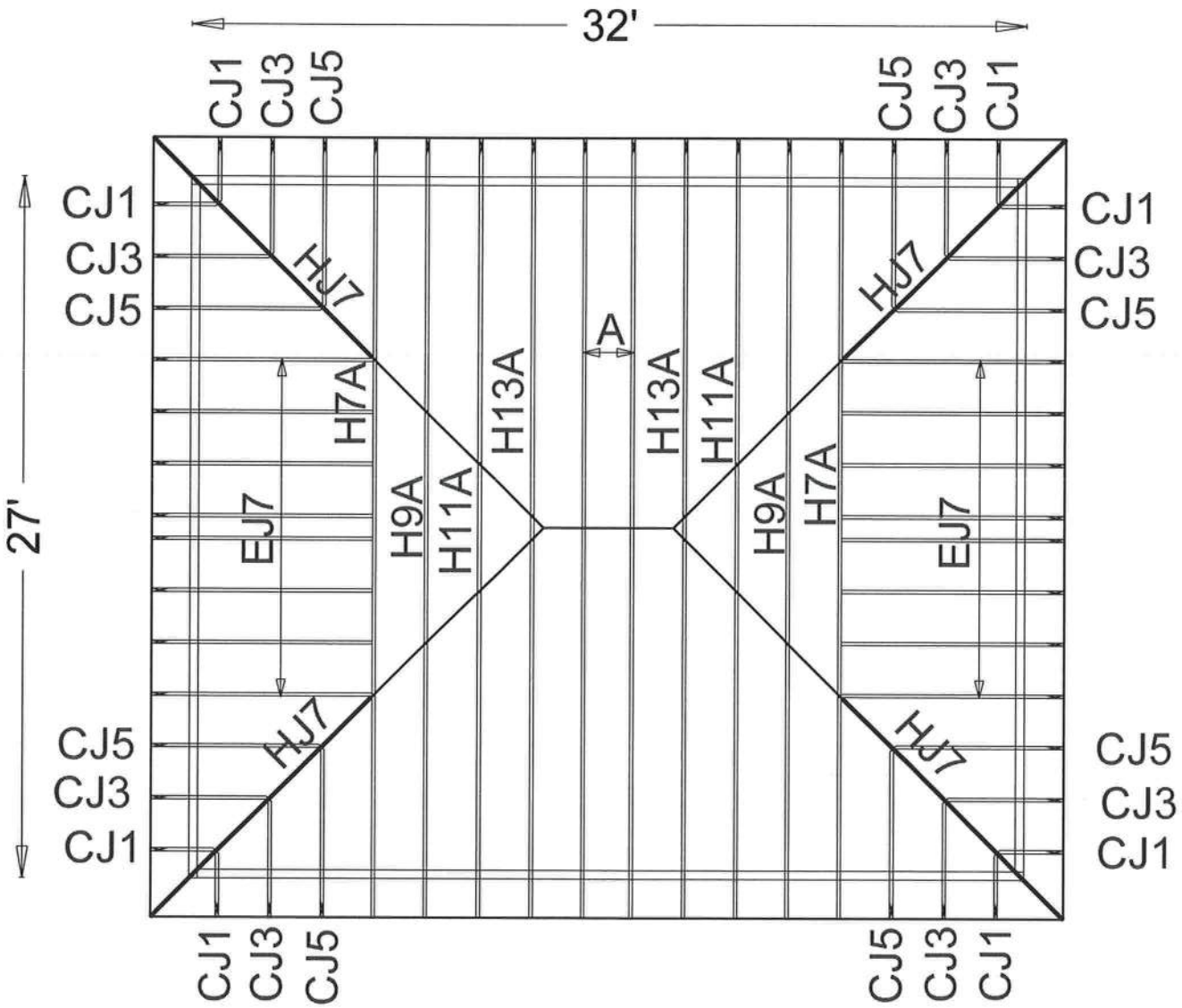

HOMETOWN HOMES/ MURPHY RESIDENCE

JOB DESCRIPTION:: Fill in later
/: HOMETOWN HOMES/MURPHY

JOB NO:
12-018

PAGE NO:
1 OF 1

(12-018--Fill in later HOMETOWN HOMES/MURPHY -- , ** - H7A)

THIS DWG PREPARED FROM COMPUTER INPUT (LOADS & DIMENSIONS) SUBMITTED BY TRUSS MFR.

Top chord 2x4 SP #1 :T2 2x6 SP #2:
Bot chord 2x6 SP #2
Webs 2x4 SP #3

Roof overhang supports 2.00 psf soffit load.

In lieu of structural panels use purlins to brace all flat TC @ 24" OC.

Deflection meets L/240 live and L/180 total load.

110 mph wind, 15.00 ft mean hgt, ASCE 7-05, CLOSED bldg, Located anywhere in roof, CAT II, EXP B, wind TC DL=5.0 psf, wind BC DL=5.0 psf. Iw=1.00 GCpi(+/-)=0.18

Wind loads and reactions based on MWFRS with additional C&C member design.

#1 hip supports 7-0-0 jacks with no webs.

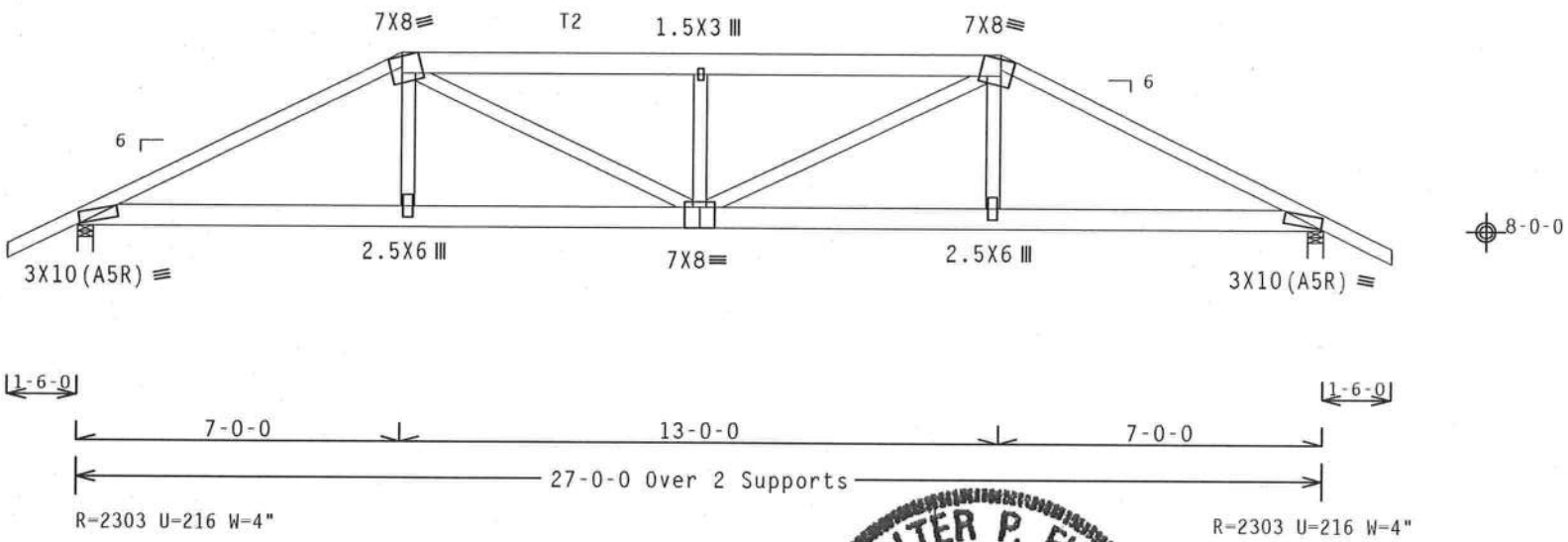

PLT TYP. Wave

Design Crit: FBC2007Res/TPI-2002(STD)
FT/RT=10%(0%)/0(0)

10.03.04.0601.16 QTY: 2

FL/-/4/-/-/R/-

Scale =.25"/Ft.

ALPINE
ITW Building Components Group Inc.
Haines City, FL 33844
FL COA #0 278

WARNING READ AND FOLLOW ALL NOTES ON THIS SHEET!
IMPORTANT FURNISH THIS DESIGN TO ALL CONTRACTORS INCLUDING INSTALLERS.

Trusses require extreme care in fabricating, handling, shipping, installing and bracing. Refer to and follow the latest edition of BCSI (Building Component Safety Information, by TPI and WTCA) for safety practices prior to performing these functions. Installers shall provide temporary bracing per BCSI. Unless noted otherwise, top chord shall have properly attached structural sheathing and bottom chord shall have a properly attached rigid ceiling. Locations shown for permanent lateral restraint of webs shall have bracing installed per BCSI sections B3, B7 or B10, as applicable.

ITW Building Components Group Inc. (ITWBCG) shall not be responsible for any deviation from this design, any failure to build the truss in conformance with ANSI/TPI 1, or for handling, shipping, installing and bracing of trusses. Apply plates to each face of truss and position as shown above and on the Joint Details, unless noted otherwise. Refer to drawings 160A-Z for standard plate positions. A seal on this drawing or cover page listing this drawing, indicates acceptance of professional engineering responsibility solely for the design shown. The suitability and use of this design for any structure is the responsibility of the Building Designer per ANSI/TPI 1 Sec.2. For more information see: This Job's general notes page; ITW-BCG: www.itwbcg.com; TPI: www.tpinst.org; WTCA: www.sbcindustry.com; ICC: www.iccsafe.org

WALTER P. FINN
LICENSE
No.22839
STATE OF FLORIDA
PROFESSIONAL ENGINEER

01/30/2012

TC LL	20.0 PSF	REF R487-- 81102
TC DL	10.0 PSF	DATE 01/30/12
BC DL	10.0 PSF	DRW HCUSR487 12030043
BC LL	0.0 PSF	HC-ENG JB/WPF
TOT.LD.	40.0 PSF	SEQN- 266357
DUR.FAC.	1.25	
SPACING	24.0"	JREF- 1UJ6487_Z03

(12-018--Fill in later HOMETOWN HOMES/MURPHY -- , ** - H9A)

THIS DWG PREPARED FROM COMPUTER INPUT (LOADS & DIMENSIONS) SUBMITTED BY TRUSS MFR.

Top chord 2x4 SP #1
Bot chord 2x4 SP #1
Webs 2x4 SP #3

Roof overhang supports 2.00 psf soffit load.

In lieu of structural panels use purlins to brace all flat TC @ 24" OC.

Deflection meets L/240 live and L/180 total load.

110 mph wind, 15.00 ft mean hgt, ASCE 7-05, CLOSED bldg, not located within 9.00 ft from roof edge, CAT II, EXP B, wind TC DL=5.0 psf, wind BC DL=5.0 psf. Iw=1.00 GCpi(+/-)=0.18

Wind loads and reactions based on MWFRS with additional C&C member design.

Bottom chord checked for 10.00 psf non-concurrent live load.

MWFRS loads based on trusses located at least 7.50 ft. from roof edge.

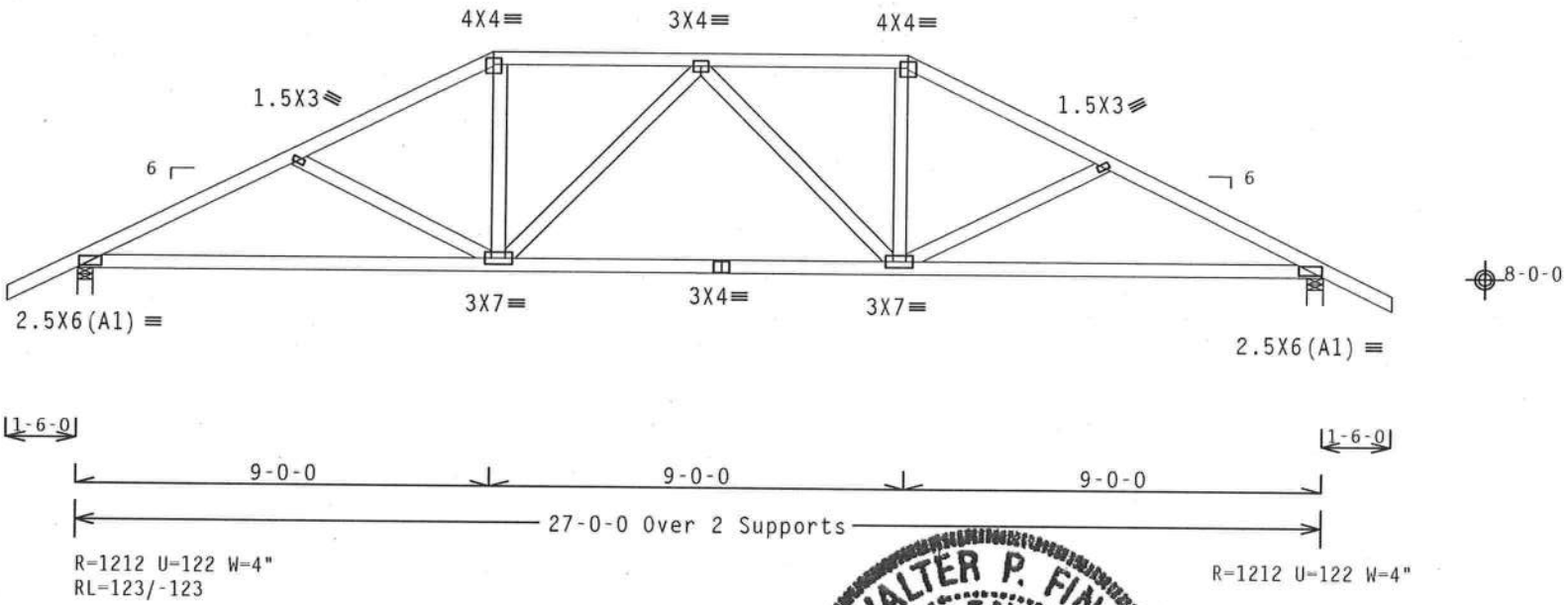

PLT TYP. Wave

Design Crit: FBC2007Res/TPI-2002(STD)
FT/RT=10%(0%)/0(0)

10.03.04.0601.16 QTY 2

FL/-/4/-/-/R/-

Scale =.25"/Ft.

ALPINE
ITW Building Components Group Inc.
Haines City, FL 33844
FL COA #0 278

WARNING READ AND FOLLOW ALL NOTES ON THIS SHEET!
IMPORTANT FURNISH THIS DESIGN TO ALL CONTRACTORS INCLUDING INSTALLERS.

Trusses require extreme care in fabricating, handling, shipping, installing and bracing. Refer to and follow the latest edition of BCSI (Building Component Safety Information, by TPI and WTCA) for safety practices prior to performing these functions. Installers shall provide temporary bracing per BCSI. Unless noted otherwise, top chord shall have properly attached structural sheathing and bottom chord shall have a properly attached rigid ceiling. Locations shown for permanent lateral restraint of [illegible] shall have bracing installed per BCSI sections B3, B7 or B10, as applicable.

ITW Building Components Group Inc. (ITWBCG) shall not be responsible for any deviation from this [illegible] any failure to build the truss in conformance with ANSI/TPI 1, or for handling, shipping, installing and bracing of trusses. Apply plates to each face of truss and position as shown above and on the Joint Details, unless noted otherwise. Refer to drawings 160A-Z for standard plate positions. A seal on this drawing or cover page listing this drawing, indicates acceptance of professional engineering responsibility solely for the design shown. The suitability and use of this design for any structure is the responsibility of the Building Designer per ANSI/TPI 1 Sec.2. For more information see: This job's general notes page; ITW-BCG: www.itwbcg.com; TPI: www.tpinst.org; WTCA: www.sbcindustry.com; ICC: www.iccsafe.org

WALTER P. FINN
LICENSE
No. 22839
STATE OF FLORIDA
PROFESSIONAL ENGINEER

01/30/2012

TC LL	20.0 PSF	REF	R487-- 81103
TC DL	10.0 PSF	DATE	01/30/12
BC DL	10.0 PSF	DRW	HCUSR487 12030038
BC LL	0.0 PSF	HC-ENG	JB/WPF *
TOT.LD.	40.0 PSF	SEQN-	266369
DUR.FAC.	1.25		
SPACING	24.0"	JREF-	1UJ6487_Z03

THIS DWG PREPARED FROM COMPUTER INPUT (LOADS & DIMENSIONS) SUBMITTED BY TRUSS MFR.

(12-018--Fill in later HOMETOWN HOMES/MURPHY -- , ** - H11A)

Top chord 2x4 SP #1
Bot chord 2x4 SP #1
Webs 2x4 SP #3

Roof overhang supports 2.00 psf soffit load.

In lieu of structural panels use purlins to brace all flat TC @ 24" OC.

Deflection meets L/240 live and L/180 total load.

110 mph wind, 15.00 ft mean hgt, ASCE 7-05, CLOSED bldg, not located within 9.00 ft from roof edge, CAT II, EXP B, wind TC DL=5.0 psf, wind BC DL=5.0 psf. Iw=1.00 GCpi(+/-)=0.18

Wind loads and reactions based on MWFRS with additional C&C member design.

Bottom chord checked for 10.00 psf non-concurrent live load.

MWFRS loads based on trusses located at least 7.50 ft. from roof edge.

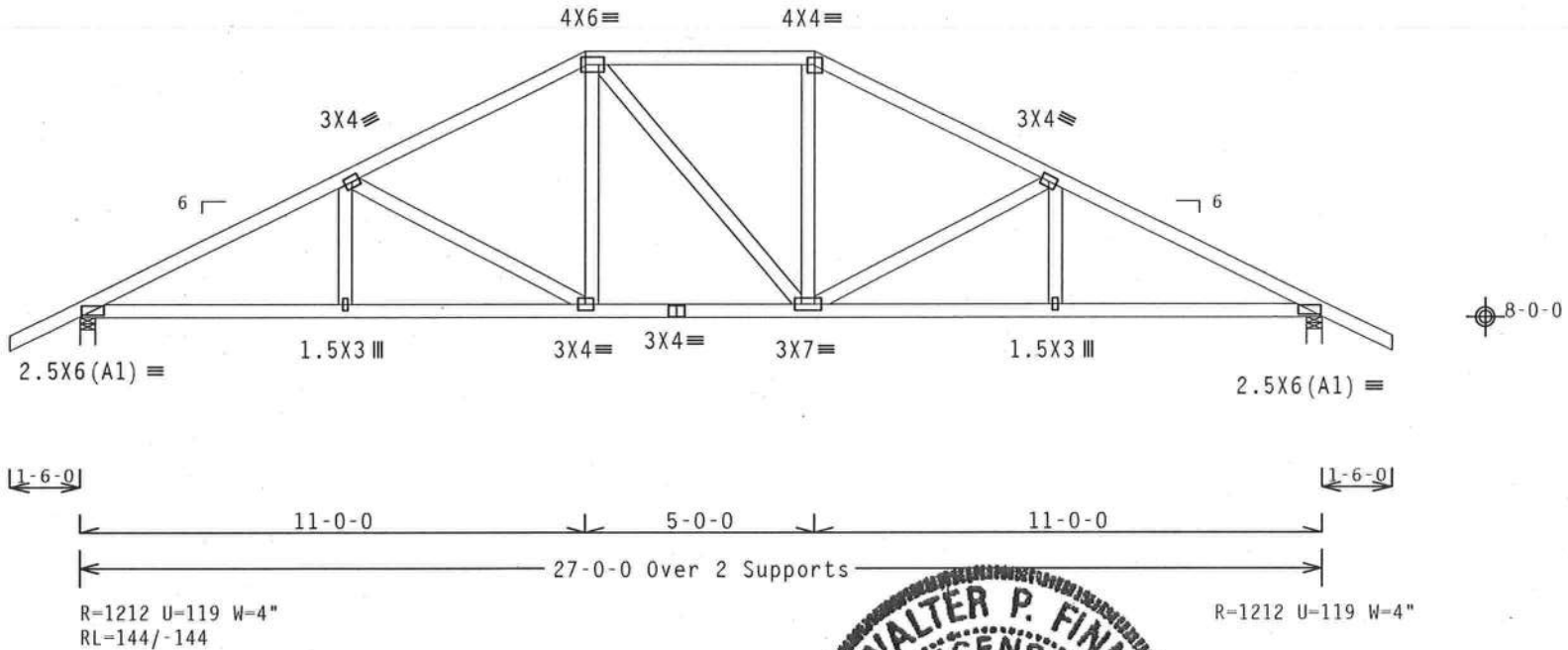

Design Crit: FBC2007Res/TPI-2002(STD)
FT/RT=10%(0%)/0(0)

PLT TYP. Wave

10.03.0[illegible] QTY: FL/-/4/-/-/R/- Scale =.25"/Ft.

ALPINE
ITW Building Components Group Inc.
Haines City, FL 33844
FL COA #0 278

WARNING READ AND FOLLOW ALL NOTES ON THIS SHEET!
IMPORTANT FURNISH THIS DESIGN TO ALL CONTRACTORS INCLUDING INSTALLERS.

Trusses require extreme care in fabricating, handling, shipping, installing and bracing. Refer to and follow the latest edition of BCSI (Building Component Safety Information, by TPI and WTCA) for safety practices prior to performing these functions. Installers shall provide temporary bracing per BCSI. Unless noted otherwise, top chord shall have properly attached structural sheathing and bottom chord shall have a properly attached rigid ceiling. Locations shown for permanent lateral restraint of webs shall have bracing installed per BCSI sections B3, B7 or B10, as applicable.

ITW Building Components Group Inc. (ITWBCG) shall not be responsible for any deviation from this design, any failure to build the truss in conformance with ANSI/TPI 1, or for handling, shipping, installation and bracing of trusses. Apply plates to each face of truss and position as shown above and on the Joint Details, unless noted otherwise. Refer to drawings 160A-Z for standard plate positions. A seal on this drawing or cover page listing this drawing, indicates acceptance of professional engineering responsibility solely for the design shown. The suitability and use of this design for any structure is the responsibility of the Building Designer per ANSI/TPI 1 Sec.2. For more information see: This job's general notes page; ITW-BCG: www.itwbcg.com; TPI: www.tpinst.org; WTCA: www.sbcindustry.com; ICC: www.iccsafe.org

WALTER P. FINN
LICENSE
No. 22839
STATE OF FLORIDA
PROFESSIONAL ENGINEER

01/30/2012

TC LL	20.0 PSF	REF	R487-- 81104
TC DL	10.0 PSF	DATE	01/30/12
BC DL	10.0 PSF	DRW	HCUSR487 12030039
BC LL	0.0 PSF	HC-ENG	JB/WPF *
TOT.LD.	40.0 PSF	SEQN-	266377
DUR.FAC.	1.25		
SPACING	24.0"	JREF-	1UJ6487_Z03

THIS DWG PREPARED FROM COMPUTER INPUT (LOADS & DIMENSIONS) SUBMITTED BY TRUSS MFR.

(12-018--Fill in later HOMETOWN HOMES/MURPHY -- , ** - H13A)

Top chord 2x4 SP #1
Bot chord 2x4 SP #1
Webs 2x4 SP #3

Roof overhang supports 2.00 psf soffit load.

In lieu of structural panels use purlins to brace all flat TC @ 24" OC.

Deflection meets L/240 live and L/180 total load.

110 mph wind, 15.00 ft mean hgt, ASCE 7-05, CLOSED bldg, not located within 9.00 ft from roof edge, CAT II, EXP B, wind TC DL=5.0 psf, wind BC DL=5.0 psf. Iw=1.00 GCpi(+/-)=0.18

Wind loads and reactions based on MWFRS with additional C&C member design.

Bottom chord checked for 10.00 psf non-concurrent live load.

MWFRS loads based on trusses located at least 7.50 ft. from roof edge.

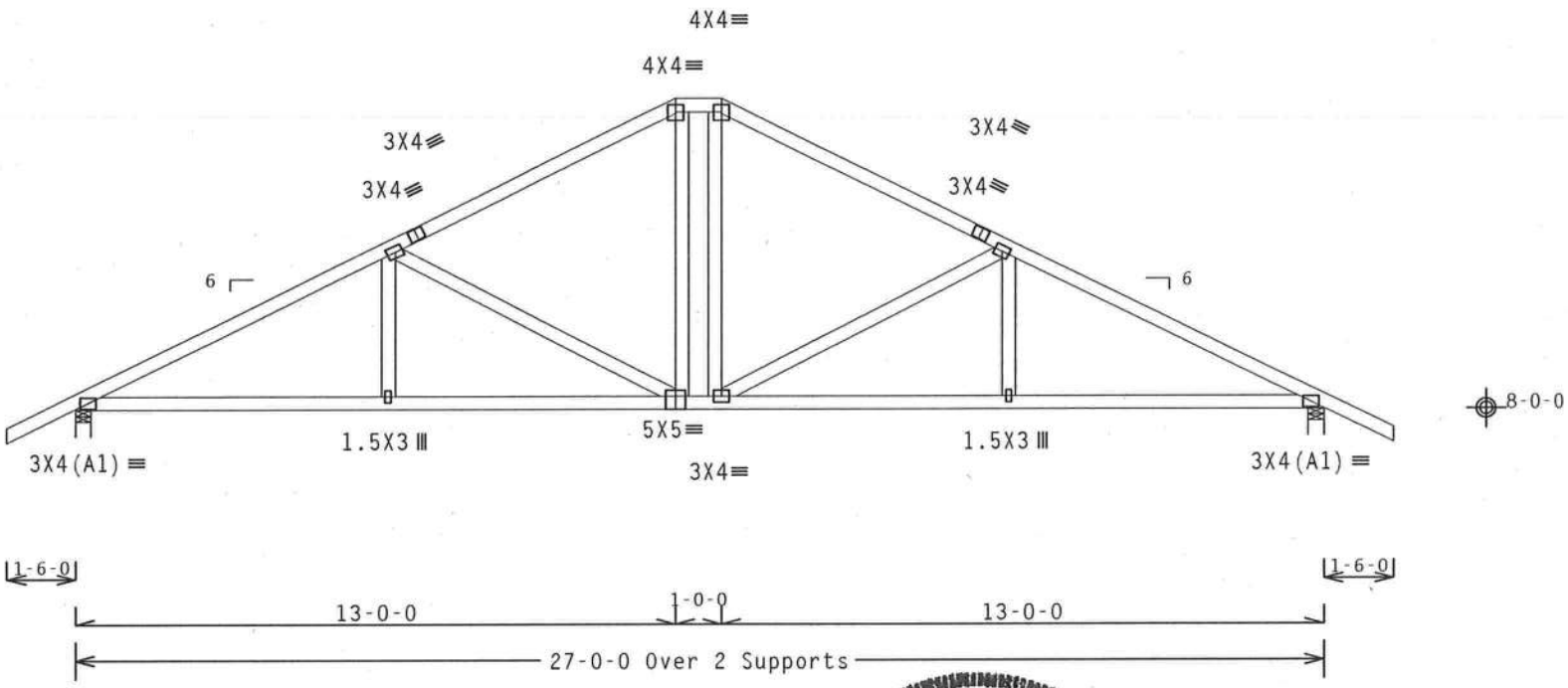

Design Crit: FBC2007Res/TPI-2002(STD) FT/RT=10%(0%)/0(0) 10.03.04.0601.16 QTY: 2 FL/-/4/-/-/R/- Scale =.25"/Ft.

PLT TYP. Wave

ALPINE
ITW Building Components Group Inc.
Haines City, FL 33844
FL COA #0 278

WARNING READ AND FOLLOW ALL NOTES ON THIS SHEET!
IMPORTANT FURNISH THIS DESIGN TO ALL CONTRACTORS INCLUDING INSTALLERS.

Trusses require extreme care in fabricating, handling, shipping, installing and bracing. Refer to and follow the latest edition of BCSI (Building Component Safety Information, by TPI and WTCA) for recommended practices prior to performing these functions. Installers shall provide temporary bracing per BCSI. Unless noted otherwise, top chord shall have properly attached structural sheathing and bottom chord shall have a properly attached rigid ceiling. Locations shown for permanent lateral restraint of webs shall have bracing installed per BCSI sections B3, B7 or B10, as applicable.

ITW Building Components Group Inc. (ITWBCG) shall not be responsible for any deviation from this design, any failure to build the truss in conformance with ANSI/TPI 1, or for handling, shipping, installing and bracing of trusses. Apply plates to each face of truss and position as shown above and on the Joint Details, unless noted otherwise. Refer to drawings 160A-Z for standard plate positions. A seal on this drawing or cover page listing this drawing, indicates acceptance of professional engineering responsibility solely for the design shown. The suitability and use of this design for any structure is the responsibility of the Building Designer per ANSI/TPI 1 Sec.2. For more information see: This job's general notes page; ITW-BCG: www.itwbcg.com; TPI: www.tpinst.org; WTCA: www.sbcindustry.com; ICC: www.iccsafe.org

WALTER P. FINN LICENSE No.22839 STATE OF FLORIDA PROFESSIONAL ENGINEER
01/30/2012

TC LL	20.0 PSF	REF	R487-- 81105
TC DL	10.0 PSF	DATE	01/30/12
BC DL	10.0 PSF	DRW	HCUSR487 12030040
BC LL	0.0 PSF	HC-ENG	JB/WPF *
TOT.LD.	40.0 PSF	SEQN-	266388
DUR.FAC.	1.25		
SPACING	24.0"	JREF-	1UJ6487_Z03

THIS DWG PREPARED FROM COMPUTER INPUT (LOADS & DIMENSIONS) SUBMITTED BY TRUSS MFR.

(12-018--Fill in later HOMETOWN HOMES/MURPHY -- , ** - A)

Top chord 2x4 SP #1
Bot chord 2x4 SP #1
Webs 2x4 SP #3

Roof overhang supports 2.00 psf soffit load.

Truss passed check for 20 psf additional bottom chord live load in areas with 42"-high x 24"-wide clearance.

Deflection meets L/240 live and L/180 total load.

110 mph wind, 15.00 ft mean hgt, ASCE 7-05, CLOSED bldg, not located within 9.00 ft from roof edge, CAT II, EXP B, wind TC DL=5.0 psf, wind BC DL=5.0 psf. Iw=1.00 GCpi(+/-)=0.18

Wind loads and reactions based on MWFRS with additional C&C member design.

Bottom chord checked for 10.00 psf non-concurrent live load.

MWFRS loads based on trusses located at least 15.00 ft. from roof edge.

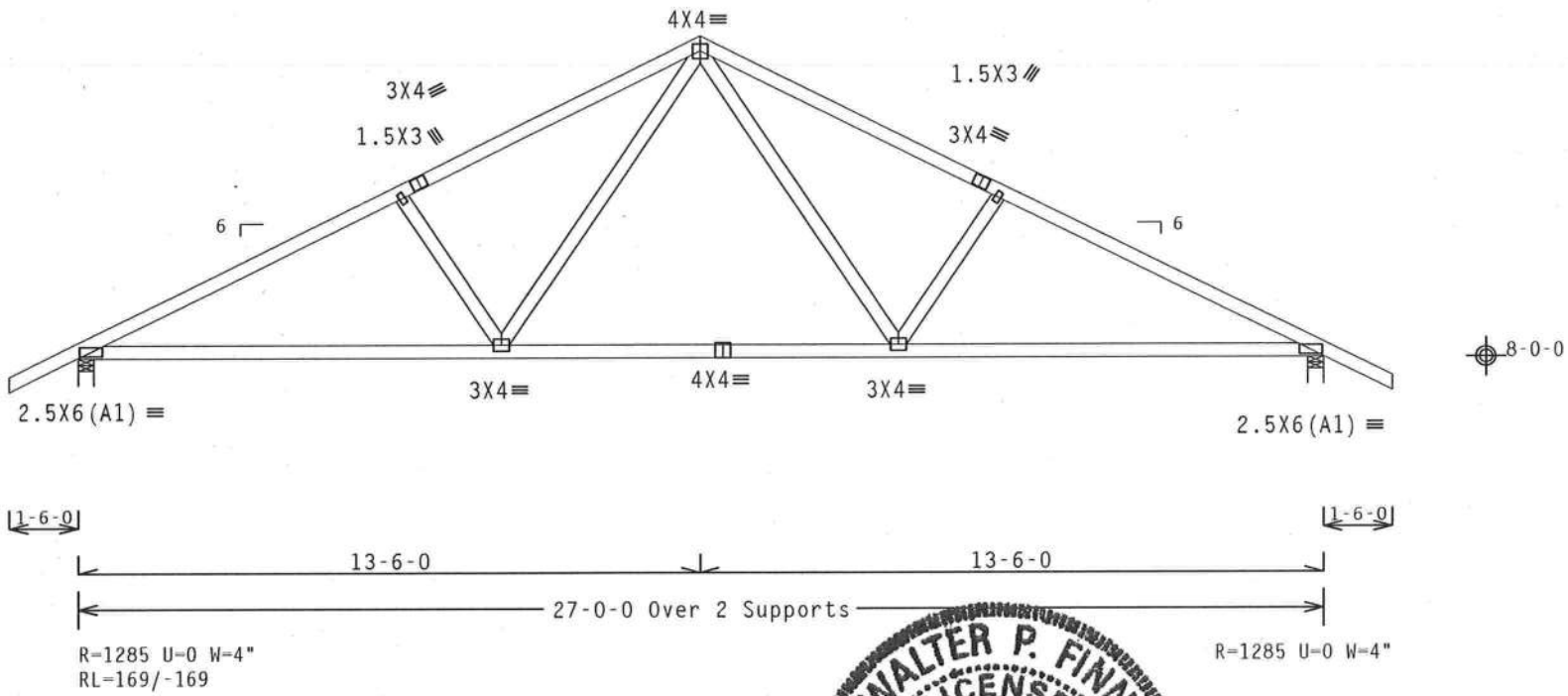

Design Crit: FBC2007Res/TPI-2002(STD)
FT/RT=10%(0%)/0(0)

PLT TYP. Wave

10-03.0 06.039 QTY:

FL/-/4/-/-/R/-

Scale =.25"/Ft.

ALPINE
ITW Building Components Group Inc.
Haines City, FL 33844
FL COA #0 278

WARNING READ AND FOLLOW ALL NOTES ON THIS SHEET!
IMPORTANT FURNISH THIS DESIGN TO ALL CONTRACTORS INCLUDING INSTALLERS.

Trusses require extreme care in fabricating, handling, shipping, installing and bracing. Refer to and follow the latest edition of BCSI (Building Component Safety Information, by TPI and WTCA) for safety practices prior to performing these functions. Installers shall provide temporary bracing per BCSI. Unless noted otherwise, top chord shall have properly attached structural sheathing and bottom chord shall have a properly attached rigid ceiling. Locations shown for permanent lateral restraint of webs shall have bracing installed per BCSI sections B3, B7 or B10, as applicable.

ITW Building Components Group Inc. (ITWBCG) shall not be responsible for any deviation from this design, any failure to build the truss in conformance with ANSI/TPI 1, or for handling, shipping, installation and bracing of trusses. Apply plates to each face of truss and position as shown above and on the Joint Details, unless noted otherwise. Refer to drawings 160A-Z for standard plate positions. A seal on this drawing or cover page listing this drawing, indicates acceptance of professional engineering responsibility solely for the design shown. The suitability and use of this design for any structure is the responsibility of the Building Designer per ANSI/TPI 1 Sec.2. For more information see: This job's general notes page; ITW-BCG: www.itwbcg.com; TPI: www.tpinst.org; WTCA: www.sbcindustry.com; ICC: www.iccsafe.org

WALTER P. FINN
LICENSE
No.22839
STATE OF FLORIDA
PROFESSIONAL ENGINEER

01/30/2012

TC LL	20.0 PSF	REF R487-- 81106
TC DL	10.0 PSF	DATE 01/30/12
BC DL	10.0 PSF	DRW HCUSR487 12030041
BC LL	0.0 PSF	HC-ENG JB/WPF *
TOT.LD.	40.0 PSF	SEQN- 266402
DUR.FAC.	1.25	
SPACING	24.0"	JREF- 1UJ6487_Z03

THIS DWG PREPARED FROM COMPUTER INPUT (LOADS & DIMENSIONS) SUBMITTED BY TRUSS MFR.

(12-018--Fill in later HOMETOWN HOMES/MURPHY -- , ** - CJ1)

Top chord 2x4 SP #1
Bot chord 2x4 SP #1

Roof overhang supports 2.00 psf soffit load.

Bottom chord checked for 10.00 psf non-concurrent live load.

Deflection meets L/240 live and L/180 total load.

110 mph wind, 15.00 ft mean hgt, ASCE 7-05, CLOSED bldg, Located anywhere in roof, CAT II, EXP B, wind TC DL=5.0 psf, wind BC DL=5.0 psf. Iw=1.00 GCpi(+/-)=0.18

Wind loads and reactions based on MWFRS with additional C&C member design.

Provide (2) 16d common nails(0.162"x3.5"), toe nailed at Top chord.
Provide (2) 16d common nails(0.162"x3.5"), toe nailed at Bot chord.

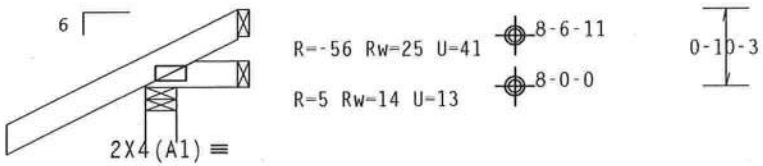

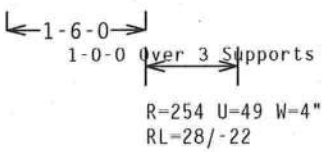

Design Crit: FBC2007Res/TPI-2002(STD)
FT/RT=10%(0%)/0(0)

PLT TYP. Wave

10.03.0[illegible] QTY: FL/-/4/-/-/R/- Scale =.5"/Ft.

ALPINE
ITW Building Components Group Inc.
Haines City, FL 33844
FL COA #0 278

WARNING READ AND FOLLOW ALL NOTES ON THIS SHEET!
IMPORTANT FURNISH THIS DESIGN TO ALL CONTRACTORS INCLUDING INSTALLERS.

Trusses require extreme care in fabricating, handling, shipping, installing and bracing. Refer to and follow the latest edition of BCSI (Building Component Safety Information, by TPI and WTCA) for safety practices prior to performing these functions. Installers shall provide temporary bracing per BCSI. Unless noted otherwise, top chord shall have properly attached structural sheathing and bottom chord shall have a properly attached rigid ceiling. Locations shown for permanent lateral restraint of web shall have bracing installed per BCSI sections B3, B7 or B10, as applicable.

ITW Building Components Group Inc. (ITWBCG) shall not be responsible for any deviation from this design, any failure to build the truss in conformance with ANSI/TPI 1, or for handling, shipping, installation & bracing of trusses. Apply plates to each face of truss and position as shown above and on the Joint Details, unless noted otherwise. Refer to drawings 160A-Z for standard plate positions. A seal on this drawing or cover page listing this drawing, indicates acceptance of professional engineering responsibility solely for the design shown. The suitability and use of this design for any structure is the responsibility of the Building Designer per ANSI/TPI 1 Sec.2. For more information see: This job's general notes page; ITW-BCG: www.itwbcg.com; TPI: www.tpinst.org; WTCA: www.sbcindustry.com; ICC: www.iccsafe.org

WALTER P. FINN
LICENSE
No. 22839
STATE OF FLORIDA
PROFESSIONAL ENGINEER

01/30/2012

TC LL	20.0 PSF	REF	R487-- 81107
TC DL	10.0 PSF	DATE	01/30/12
BC DL	10.0 PSF	DRW	HCUSR487 12030044
BC LL	0.0 PSF	HC-ENG	JB/WPF
TOT.LD.	40.0 PSF	SEQN-	266337
DUR.FAC.	1.25		
SPACING	24.0"	JREF-	1UJ6487_Z03

(12-018--Fill in later HOMETOWN HOMES/MURPHY -- , ** - CJ3)

Top chord 2x4 SP #1
Bot chord 2x4 SP #1

Roof overhang supports 2.00 psf soffit load.

Bottom chord checked for 10.00 psf non-concurrent live load.

Deflection meets L/240 live and L/180 total load.

110 mph wind, 15.00 ft mean hgt, ASCE 7-05, CLOSED bldg, Located anywhere in roof, CAT II, EXP B, wind TC DL=5.0 psf, wind BC DL=5.0 psf. Iw=1.00 GCpi(+/-)=0.18

Wind loads and reactions based on MWFRS with additional C&C member design.

Provide (2) 16d common nails(0.162"x3.5"), toe nailed at Top chord.
Provide (2) 16d common nails(0.162"x3.5"), toe nailed at Bot chord.

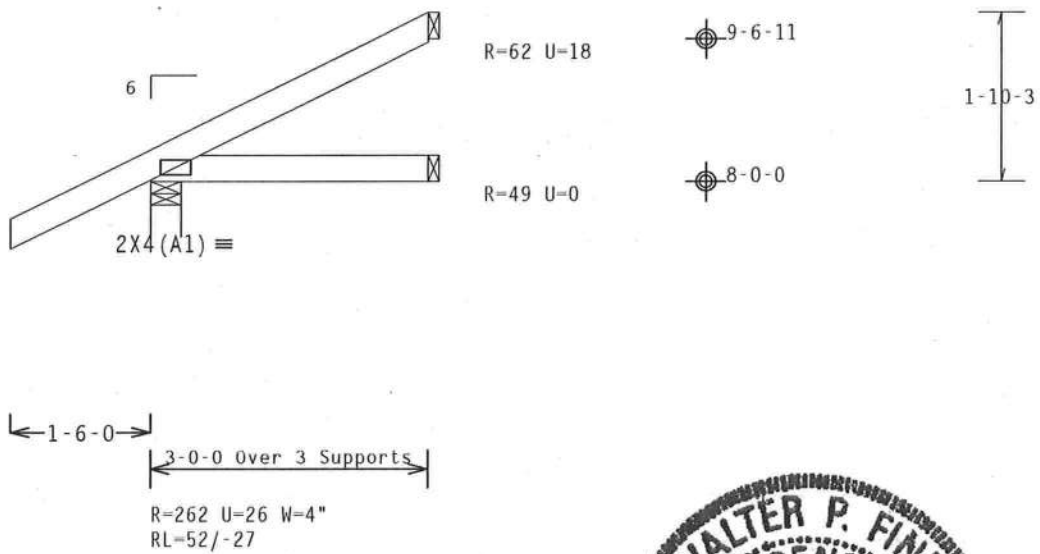

Design Crit: FBC2007Res/TPI-2002(STD) FT/RT=10%(0%)/0(0) 10.03.04 0601.16 QTY:8 FL/-/4/-/-/R/- Scale =.5"/Ft.

PLT TYP. Wave

ALPINE
ITW Building Components Group Inc.
Haines City, FL 33844
FL COA #0 278

WARNING READ AND FOLLOW ALL NOTES ON THIS SHEET!
IMPORTANT FURNISH THIS DESIGN TO ALL CONTRACTORS INCLUDING INSTALLERS.

Trusses require extreme care in fabricating, handling, shipping, installing and bracing. Refer to and follow the latest edition of BCSI (Building Component Safety Information, by TPI and WTCA) for safety practices prior to performing these functions. Installers shall provide temporary bracing per BCSI. Unless noted otherwise, top chord shall have properly attached structural sheathing and bottom chord shall have a properly attached rigid ceiling. Locations shown for permanent lateral restraint of webs shall have bracing installed per BCSI sections B3, B7 or B10, as applicable.

ITW Building Components Group Inc. (ITWBCG) shall not be responsible for any deviation from this design, any failure to build the truss in conformance with ANSI/TPI 1, or for handling, shipping, installing and bracing of trusses. Apply plates to each face of truss and position as shown above and on the Joint Details, unless noted otherwise. Refer to drawings 160A-Z for standard plate positions. A seal on this drawing or cover page listing this drawing, indicates acceptance of professional engineering responsibility solely for the design shown. The suitability and use of this design for any structure is the responsibility of the Building Designer per ANSI/TPI 1 Sec.2. For more information see: This job's general notes page; ITW-BCG: www.itwbcg.com; TPI: www.tpinst.org; WTCA: www.sbcindustry.com; ICC: www.iccsafe.org

WALTER P. FINN LICENSE No. 22839 STATE OF FLORIDA PROFESSIONAL ENGINEER
01/30/2012

TC LL	20.0 PSF	REF	R487-- 81108
TC DL	10.0 PSF	DATE	01/30/12
BC DL	10.0 PSF	DRW	HCUSR487 12030042
BC LL	0.0 PSF	HC-ENG	JB/WPF *
TOT.LD.	40.0 PSF	SEQN-	266340
DUR.FAC.	1.25		
SPACING	24.0"	JREF-	1UJ6487_Z03

THIS DWG PREPARED FROM COMPUTER INPUT (LOADS & DIMENSIONS) SUBMITTED BY TRUSS MFR.

(12-018--Fill in later HOMETOWN HOMES/MURPHY -- , ** - CJ5)

Top chord 2x4 SP #1
Bot chord 2x4 SP #1

Roof overhang supports 2.00 psf soffit load.

Bottom chord checked for 10.00 psf non-concurrent live load.

Deflection meets L/240 live and L/180 total load.

110 mph wind, 15.00 ft mean hgt, ASCE 7-05, CLOSED bldg, not located within 4.50 ft from roof edge, CAT II, EXP B, wind TC DL=5.0 psf, wind BC DL=5.0 psf. Iw=1.00 GCpi(+/-)=0.18

Wind loads and reactions based on MWFRS with additional C&C member design.

Provide (2) 16d common nails(0.162"x3.5"), toe nailed at Top chord.
Provide (2) 16d common nails(0.162"x3.5"), toe nailed at Bot chord.

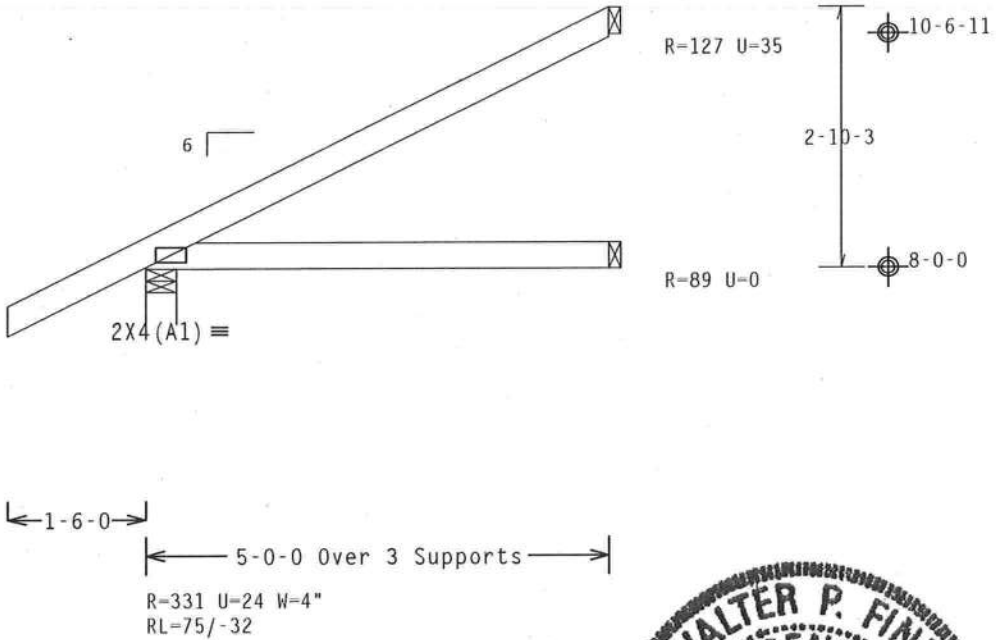

Design Crit: FBC2007Res/TPI-2002(STD) FT/RT=10%(0%)/0(0) 10.03.04.0601.16 QTY:8 FL/-/4/-/-/R/- Scale =.5"/Ft.

PLT TYP. Wave

ALPINE
ITW Building Components Group Inc.
Haines City, FL 33844
FL COA #0 278

WARNING READ AND FOLLOW ALL NOTES ON THIS SHEET!
IMPORTANT FURNISH THIS DESIGN TO ALL CONTRACTORS INCLUDING INSTALLERS.

Trusses require extreme care in fabricating, handling, shipping, installing and bracing. Refer to and follow the latest edition of BCSI (Building Component Safety Information, by TPI and WTCA) for safety practices prior to performing these functions. Installers shall provide temporary bracing per BCSI. Unless noted otherwise, top chord shall have properly attached structural sheathing and bottom chord shall have a properly attached rigid ceiling. Locations shown for permanent lateral restraint of web members shall have bracing installed per BCSI sections B3, B7 or B10, as applicable.

ITW Building Components Group Inc. (ITWBCG) shall not be responsible for any deviation from this design, any failure to build the truss in conformance with ANSI/TPI 1, or for handling, shipping, installing and bracing of trusses. Apply plates to each face of truss and position as shown above and on the Joint Details, unless noted otherwise. Refer to drawings 160A-Z for standard plate positions. A seal on this drawing or cover page listing this drawing, indicates acceptance of professional engineering responsibility solely for the design shown. The suitability and use of this design for any structure is the responsibility of the Building Designer per ANSI/TPI 1 Sec.2. For more information see: This job's general notes page; ITW-BCG: www.itwbcg.com; TPI: www.tpinst.org; WTCA: www.sbcindustry.com; ICC: www.iccsafe.org

WALTER P. FINN LICENSE No.22839 STATE OF FLORIDA PROFESSIONAL ENGINEER
01/30/2012

TC LL	20.0 PSF	REF	R487-- 81109
TC DL	10.0 PSF	DATE	01/30/12
BC DL	10.0 PSF	DRW	HCUSR487 12030045
BC LL	0.0 PSF	HC-ENG	JB/WPF
TOT.LD.	40.0 PSF	SEQN-	266343
DUR.FAC.	1.25		
SPACING	24.0"	JREF-	1UJ6487_Z03

THIS DWG PREPARED FROM COMPUTER INPUT (LOADS & DIMENSIONS) SUBMITTED BY TRUSS MFR.

(12-018--Fill in later HOMETOWN HOMES/MURPHY -- , ** - EJ7)

Top chord 2x4 SP #1
Bot chord 2x4 SP #1

Roof overhang supports 2.00 psf soffit load.

Bottom chord checked for 10.00 psf non-concurrent live load.

Deflection meets L/240 live and L/180 total load.

110 mph wind, 15.00 ft mean hgt, ASCE 7-05, CLOSED bldg, not located within 4.50 ft from roof edge, CAT II, EXP B, wind TC DL=5.0 psf, wind BC DL=5.0 psf. Iw=1.00 GCpi(+/-)=0.18

Wind loads and reactions based on MWFRS with additional C&C member design.

Provide (2) 16d common nails(0.162"x3.5"), toe nailed at Top chord.
Provide (2) 16d common nails(0.162"x3.5"), toe nailed at Bot chord.

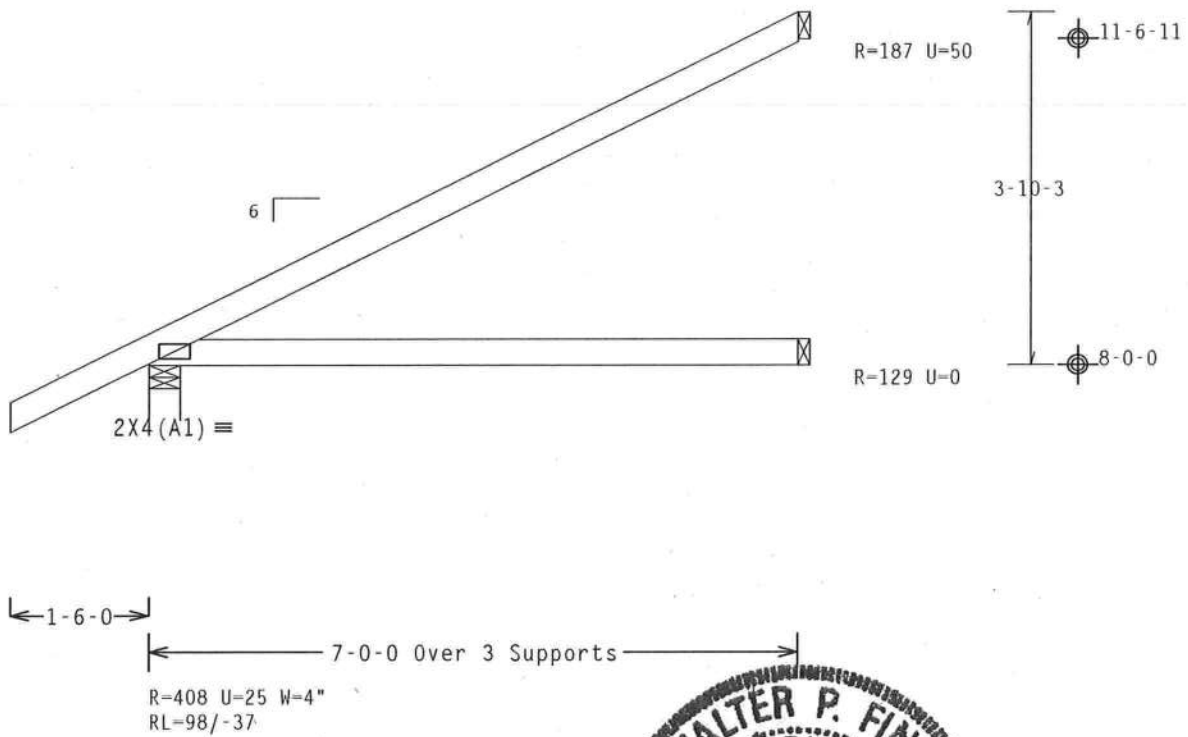

Design Crit: FBC2007Res/TPI-2002(STD) FT/RT=10%(0%)/0(0) 10.03.04.0601.16 QTY:16 FL/-/4/-/-/R/-

PLT TYP. Wave

Scale =.5"/Ft.

ALPINE
ITW Building Components Group Inc.
Haines City, FL 33844
FL COA #0 278

WARNING READ AND FOLLOW ALL NOTES ON THIS SHEET!
IMPORTANT FURNISH THIS DESIGN TO ALL CONTRACTORS INCLUDING INSTALLERS.

Trusses require extreme care in fabricating, handling, shipping, installing and bracing. Refer to and follow the latest edition of BCSI (Building Component Safety Information, by TPI and WTCA) for safety practices prior to performing these functions. Installers shall provide temporary bracing per BCSI. Unless noted otherwise, top chord shall have properly attached structural sheathing and bottom chord shall have a properly attached rigid ceiling. Locations shown for permanent lateral restraint of webs shall have bracing installed per BCSI sections B3, B7 or B10, as applicable.

ITW Building Components Group Inc. (ITWBCG) shall not be responsible for any deviation from this design, any failure to build the truss in conformance with ANSI/TPI 1, or for handling, shipping, installing and bracing of trusses. Apply plates to each face of truss and position as shown above and on the Joint Details, unless noted otherwise. Refer to drawings 160A-Z for standard plate positions. A seal on this drawing or cover page listing this drawing, indicates acceptance of professional engineering responsibility solely for the design shown. The suitability and use of this design for any structure is the responsibility of the Building Designer per ANSI/TPI 1 Sec.2. For more information see: This job's general notes page; ITW-BCG: www.itwbcg.com; TPI: www.tpinst.org; WTCA: www.sbcindustry.com; ICC: www.iccsafe.org

WALTER P. FINN
LICENSE
No. 22839
STATE OF FLORIDA
PROFESSIONAL ENGINEER

01/30/2012

TC LL	20.0 PSF	REF	R487-- 81110
TC DL	10.0 PSF	DATE	01/30/12
BC DL	10.0 PSF	DRW	HCUSR487 12030046
BC LL	0.0 PSF	HC-ENG	JB/WPF
TOT.LD.	40.0 PSF	SEQN-	266346
DUR.FAC.	1.25		
SPACING	24.0"	JREF-	1UJ6487_Z03

(12-018--Fill in later HOMETOWN HOMES/MURPHY -- , ** - HJ7)

THIS DWG PREPARED FROM COMPUTER INPUT (LOADS & DIMENSIONS) SUBMITTED BY TRUSS MFR.

Top chord 2x4 SP #1
Bot chord 2x4 SP #1
Webs 2x4 SP #3

Hipjack supports 7-0-0 setback jacks with no webs.

Deflection meets L/240 live and L/180 total load.

110 mph wind, 15.00 ft mean hgt, ASCE 7-05, CLOSED bldg, Located anywhere in roof, CAT II, EXP B, wind TC DL=5.0 psf, wind BC DL=5.0 psf. Iw=1.00 GCpi(+/-)=0.18

Wind loads and reactions based on MWFRS with additional C&C member design.

Provide (2) 16d common nails(0.162"x3.5"), toe nailed at Top chord.
Provide (3) 16d common nails(0.162"x3.5"), toe nailed at Bot chord.

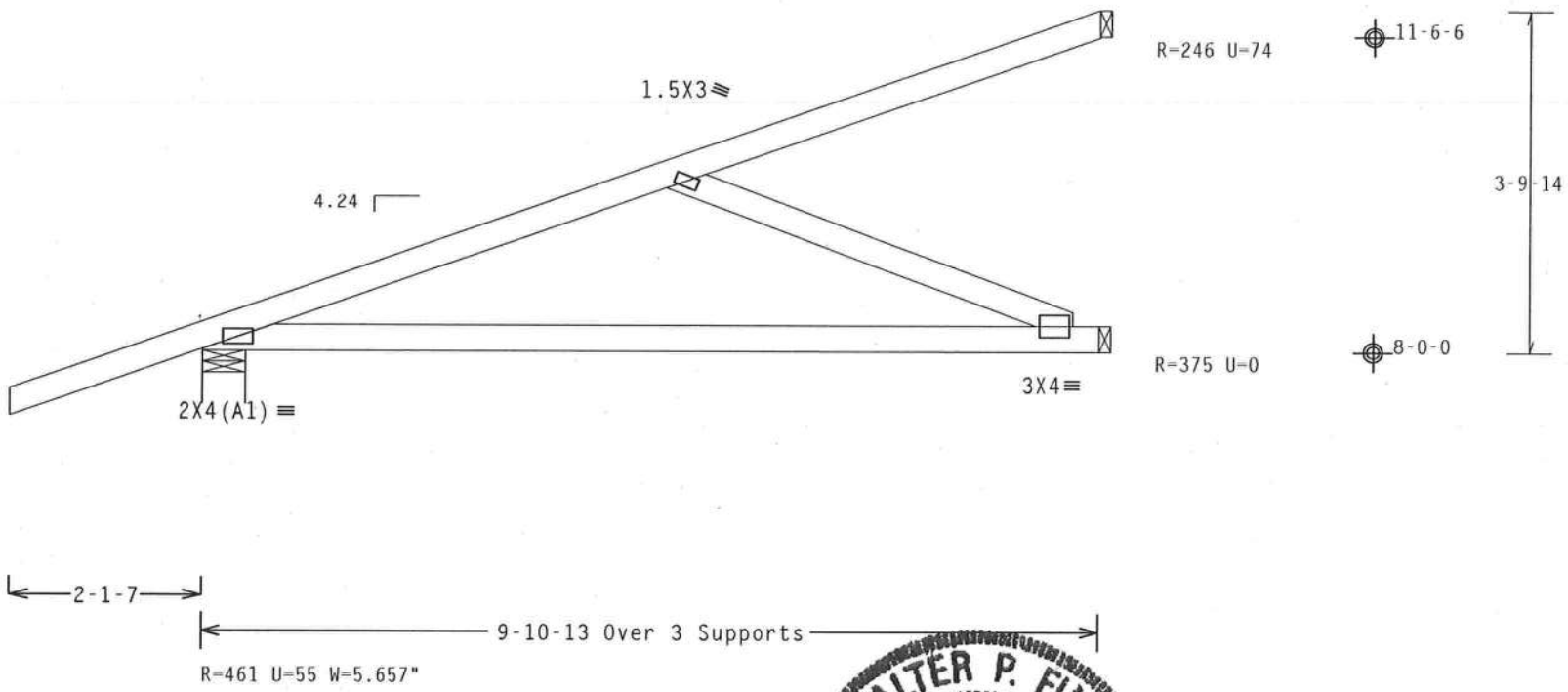

Design Crit: FBC2007Res/TPI-2002(STD)

PLT TYP. Wave

FT/RT=10%(0%)/0(0)

10.03.0 QTY:

FL/-/4/-/-/R/-

Scale =.5"/Ft.

WALTER P. FINN LICENSE No.22889 STATE OF FLORIDA PROFESSIONAL ENGINEER

01/30/2012

ALPINE
ITW Building Components Group Inc.
Haines City, FL 33844
FL COA #0 278

WARNING READ AND FOLLOW ALL NOTES ON THIS SHEET!
IMPORTANT FURNISH THIS DESIGN TO ALL CONTRACTORS INCLUDING INSTALLERS.

Trusses require extreme care in fabricating, handling, shipping, installing and bracing. Refer to and follow the latest edition of BCSI (Building Component Safety Information, by TPI and WTCA) for safety practices prior to performing these functions. Installers shall provide temporary bracing per BCSI. Unless noted otherwise, top chord shall have properly attached structural sheathing and bottom chord shall have a properly attached rigid ceiling. Locations shown for permanent lateral restraint of webs shall have bracing installed per BCSI sections B3, B7 or B10, as applicable.

ITW Building Components Group Inc. (ITWBCG) shall not be responsible for any deviation from this design, any failure to build the truss in conformance with ANSI/TPI 1, or for handling, shipping, installation and bracing of trusses. Apply plates to each face of truss and position as shown above and on the Joint Details, unless noted otherwise. Refer to drawings 160A-Z for standard plate positions. A seal on this drawing or cover page listing this drawing, indicates acceptance of professional engineering responsibility solely for the design shown. The suitability and use of this design for any structure is the responsibility of the Building Designer per ANSI/TPI 1 Sec.2. For more information see: This job's general notes page; ITW-BCG: www.itwbcg.com; TPI: www.tpinst.org; WTCA: www.sbcindustry.com; ICC: www.iccsafe.org

TC LL	20.0 PSF	REF R487-- 81111
TC DL	10.0 PSF	DATE 01/30/12
BC DL	10.0 PSF	DRW HCUSR487 12030047
BC LL	0.0 PSF	HC-ENG JB/WPF
TOT.LD.	40.0 PSF	SEQN- 266351
DUR.FAC.	1.25	
SPACING	24.0"	JREF- 1UJ6487_Z03

FORM 600A-08

FLORIDA ENERGY EFFICIENCY CODE FOR BUILDING CONSTRUCTION
Alternate Residential Points System Method

NORTH 1 2 3

PROJECT NAME: AND ADDRESS:	1201073	BUILDER: Home Town Homes	
	Columbia County, FL	PERMITTING OFFICE: COLUMBIA	CLIMATE ZONE: 1 [ ] 2 [ ] 3 [✓]
OWNER:	Murphy Res	PERMIT NO.:	JURISDICTION NO.: 2 2 1 0 0 0

	Please Type	CK
1. New construction or addition	1. New	
2. Single-family detached or Multiple-family attached	2. single	
3. If Multiple-family–No. of units covered by this submission	3.	
4. Is this a worst case? (yes/no)	4. yes	
5. Conditioned floor area (sq. ft.)	5. 864 sq. ft.	
6. Predominant eave overhang (ft.)	6. 1.5 ft.	
7. Glass type[1] and area: (Label required by 13-104.4.5 if not default)	Description / Area	
a. *U*-factor: (or Single- or Double-Pane DEFAULT)	7a. double clear 54 sq. ft.	
b. SHGC: (or Clear or Tint DEFAULT)	7b. sq. ft.	
8. Floor type and insulation:		
a. Slab-on-grade (*R*-value + perimeter)	8a. R = 0 , 118 l. ft.	
b. Wood, raised (*R*-value + sq. ft.)	8b. R = , sq. ft.	
c. Concrete, raised (*R*-value)	8c. R = , sq. ft.	
9. Net wall type, area and insulation:		
a. Exterior: 1. Concrete block (Insulation *R*-value)	9a-1 R = , sq. ft.	
2. Wood frame (Insulation *R*-value)	9a-2 R = 13 , 850 sq. ft.	
3. Steel frame (Insulation *R*-value)	9a-3 R = , sq. ft.	
4. Log (Insulation *R*-value)	9a-4 R = , sq. ft.	
5. Other:		
b. Adjacent: 1. Concrete block (Insulation *R*-value)	9b-1 R = , sq. ft.	
2. Wood frame (Insulation *R*-value)	9b-2 R = , sq. ft.	
3. Steel frame (Insulation *R*-value)	9b-3 R = , sq. ft.	
4. Log (Insulation *R*-value)	9b-4 R = , sq. ft.	
10. Ceiling type, area and insulation:		
a. Under attic (Insulation *R*-value)	10a. R=30 864 sq. ft.	
b. Single assembly (Insulation *R*-value)	10b. sq. ft.	
c. Radiant barrier, IRCC or white roof installed?	10c.	
11. Air distribution system:		
a. Ducts (Insulation + Location)	11a. R = 6 , attic (cond./uncond.)	
b. Air Handler (Location)	11b. R = , int (cond./uncond.)	
12. Cooling system: (Types: central-split, central-single pkg., room unit, PTAC, gas, none)	12a. Type: Central Split	
	12b. SEER/EER/COP: 13	
	12c. Capacity: 20 kBtu/hr	
13. Heating system: (Types: heat pump, elec. strip, nat. gas, LP gas, gas h.p., room or PTAC, none)	13a. Type: Heat Pump	
	13b. HSPF/COP/AFUE: 7.8	
	13c. Capacity: 20 kBtu/hr	
14. Hot water system: (Types: elec., natural gas, solar, LP gas, none)	14a. Type: elec	
	14b. EF: .94	
15. Hot water credits		
a. Heat Recovery (HR)	15a.	
b. Dedicated Heat Pump (DHP)	15b.	
c. Solar	15c.	
16. HVAC Credits (Use: CF-ceiling fan, CV-cross vent, PT-programmable thermostat, HF-whole house fan, MZ-Multizone)	16.	
17. COMPLIANCE STATUS: (PASS if As-Built Pts. are less than Base Pts.)	17. PASS	
a. Total As-Built points / b. Total Base points	17a. 11917 17b. 11671	

COLUMBIA COUNTY BUILDING DEPARTMENT
Received for FILE COPY
Code Compliance
PLANS EXAMINER

I hereby certify that the plans and specifications covered by the calculation are in compliance with the Florida Energy Code.
PREPARED BY: Evan Beamsley DATE: 2012-2-1
I hereby certify that this building is in compliance with the Florida Energy Code:
OWNER AGENT: DATE:

Review of plans and specifications covered by this calculation indicates compliance with the Florida Energy Code. Before construction is completed, this building will be inspected for compliance in accordance with Section 553.908, F.S.
BUILDING OFFICIAL:
DATE:

GLASS	ORIENTATION	OVERHANG LENGTH OH (FEET)	GLASS AREA (SQ. FT)	SINGLE-PANE SUMMER POINT MULTIPLIER		DUBLE-PANE SUMMER POINT MULTIPLER		SUMMER OH FACTOR (from 6A-1)	AS-BUILT GLASS SUMMER PTS
				CLEAR	TINT (2)	CLEAR	TINT (2)		
	W	1.5	15			38.52		0.963	556
	N	1.5	9			19.2		0.888	153
	E	1.5	30			42.06		0.963	1215
		0	0				0		0
		0	0				0		0
		0	0				0		0
		0	0				0		0
		0	0				0		0
		0	0				0		0
		0	0				0		0
		0	0				0		0
		0	0				0		0
		0	0				0		0
		0	0				0		0
		0	0				0		0
		0	0				0		0
		0	0				0		0
		0	0				0		0
		0	0				0		0
		0	0				0		0
		0	0				0		0
		0	0				0		0

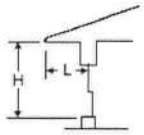

OVERHANG RATIO = $\frac{\text{OH LENGTH}}{\text{OH HEIGHT}}$

GLASS	COND FLOOR AREA	WEIGHTED GLASS MULTIPLIER	BASE GLASS SUBTOTAL
0.18	864	18.59	2891

AS-BUILT GLASS SUBTOTAL
1925

	COMPONENT DESCRIPTION	AREA	BASE SUMMER POINT MULT.	BASE SUM POINTS	COMPONENT DESCRIPTION	AREA	SUMMER POINT MULT. (6A-2 - 6A-6)	AS BUILT SUMMER POINTS
WALL	EXTERIOR	850	1.5	1275	EXT FRAME R13	850	1.5	1275
	ADJACENT	0	0.6	0	ADJ FRAME R13	0	0.6	0
						0		0
						0		0
DOORS	EXTERIOR	40	6.1	244	EXT INSULATED	40	4.1	164
	ADJACENT	0	2.4	0	ADJ INSULATED	0	1.6	0
						0		0
CEILING	UNDER ATTIC OR SINGLE ASSEMBLY	864	1.73	1495	ATTIC R30	864	1.73	1495
					RBS/IECC/white roof (3)	0	1.03	0
	BASE CEILING AREA EQUALS FLOOR AREA DIRECTLY UNDER CEILING. AS-BUILT CEILING AREA EQUALS ACTUAL CEILING SQUARE FOOTAGE							
FLOOR	SLAB (PERIMETER)	118	-41.2	-4862	SLAB	118	-41.2	-4861.6
	RAISED (AREA)	0	-0.98	0		0	0	0
	FOR SLAB-ON-GRADE USE PERIMITER LENGTH AROUND CONDITIONED FLOOR, FOR RAISED FLOORS USE AREA OVER UNCONDITIONED SPACE							
INFILTRATION & INTERNAL GAINS		864	10.21	8821		864	10.21	8821
		USE TOTAL FLOOR AREA OF CONDITIONED SPACE						

TOTAL COMPONENT BASE SUMMER POINTS	9865	TOTAL COMPONENT AS-BUILT SUMMER POINTS	8819

COOLING SYSTEM	BASE COOLING SYSTEM MULTIPLIER	TOTAL BASE SUMMER POINTS	BASE COOLING POINTS	TOTAL AS-BUILT SUM. PTS.	AS-BUILT DM (6A-8)	AS-BUILT DSM (6A-20)	AS-BUILT AHU (6A-7)	AS-BUILT CMS (6A-9)	AS-BUILT CCM (6A-19)	AS-BUILT COOLING POINTS
	0.325	9865	**3206**	8819	1.09	1.15	0.91	0.26	1	**2615**

HOT WATER SYSTEM	NUMBER OF BEDROOMS	BASE HOT WATER MULTIPLIER	BASE HOT WATER POINTS	AS-BUILT HOT WATER SYSTEM DESCRIPTION	NUMBER OF BED-ROOMS	AS-BUILT HWM (6A-23)	AS-BUILT HWCM (6A-23)	AS-BUILT HOT WATER POINTS
	2	2635	**5270**	elec .94	2	2571	1	**5142**

(1) H = HORIZONTAL GLASS (SKYLIGHTS)	(2) FOR GLASS WITH KNOW SHGC, SEE SEC. 2.1.1 OF APPENDIX G-C of the *FBC, Residential.* TINT MULTIPLIERS MAY BE USED FOR GLASS WITH SOLAR SCREENS, FILM, OR TINT	(3) MUST MEET CRITERIA OF APPENDIX G-C4.2.1.5 of the *FBC, Residential.*

OH Ratio	.00-.11	.12-.17	.18-.26	.27-.35	.36-.46	.47-.57	.58-.70	.71-.83	.84-1.18	1.19-1.72	1.73-2.73	2.74 &
North	1.00	0.993	0.971	0.930	0.888	0.842	0.803	0.766	0.736	0.681	0.634	0.59
Northeast	1.00	0.996	0.967	0.907	0.845	0.775	0.717	0.662	0.619	0.545	0.487	0.44
East	1.00	0.994	0.963	0.898	0.827	0.745	0.675	0.609	0.558	0.470	0.405	0.35
Southeast	1.00	0.998	0.952	0.864	0.777	0.689	0.623	0.566	0.525	0.459	0.413	0.37
South	1.00	0.989	0.931	0.835	0.751	0.675	0.620	0.575	0.543	0.493	0.458	0.43
Southwest	1.00	0.998	0.953	0.866	0.779	0.691	0.623	0.565	0.522	0.453	0.404	0.36
West	1.00	0.994	0.963	0.899	0.828	0.748	0.681	0.617	0.569	0.485	0.422	0.37
Northwest	1.00	0.996	0.968	0.913	0.858	0.797	0.748	0.702	0.667	0.605	0.556	0.51
OH Length	0.0'	1.0'	1.5'	2.0'	3.0'	3.5'	4.5'	5.5'	6.5'	9.5'	14.0'	20.0

SELECT BY OR

6A-2 WALL SUMMER POINT MULTIPLIERS (SPM)

FRAME					CONCRETE BLOCK (NORMAL WT)				FACE BRICK				LOG		
	WOOD		STEEL			INTERIOR INSULATION		EXT. INSUL.	*R*-VALUE	WOOD FR	*R*-VALUE	BLOCK		6 INCH	8 INC
R-VALUE	EXT	ADJ	EXT	ADJ	*R*-VALUE	EXT	ADJ	EXT	0-6.9	2.4	0-2.9	1.0	*R*-VALUE	EXT	EX
0-6.9	5.5	2.2	7.6	2.8	0-2.9	2.2	1.1	2.2	7-10.9	.6	3-6.9	.6	0-2.9	1.5	1.0
7-10.9	2.1	.8	3.5	1.3	3-4.9	1.3	.8	.8	11-18.9	.4	7-9.9	.4	3-6.9	1.0	.7
11-12.9	1.7	.7	2.7	1.0	5-6.9	1.0	.7	.5	19-25.9	.2	10 & UP	.2	7 & UP	.8	.6
13-18.9	1.5	.6	2.5	0.9	7-10.9	.7	.5	.3	26 & UP	.1					
19-25.9	.9	.4	2.2	0.8	11-18.9	.4	.4	0							
26 & UP	.6	.2	1.2	0.4	19-25.9	.2	.2								
					26 & UP	.1	.1								

6A-3 DOOR SUMMER POINT MULTIPLIERS (SPM)

DOOR TYPE	EXTERIOR	ADJACENT
WOOD	6.1	2.4
INSULATED	4.1	1.6

6A-4 CEILING SUMMER POINT MULTIPLIERS (SPM)

UNDER ATTIC		SINGLE ASSEMBLY		CONCRETE DECK ROOF		
R-VALUE	SPM	*R*-VALUE	SPM		CEILING TYPE	
				R-VALUE	EXPOSED	DROPPE
19-21.9	2.34	10-10.9	8.49	10-13.9	9.13	8.47
22-25.9	2.11	11-12.9	7.97	14-20.9	6.80	6.45
26-29.9	1.89	13-18.9	7.14	21 & UP	4.92	4.63
30-37.9	1.73	19-25.9	5.64			
38 & UP	1.52	26-29.9	4.75			
RBS Credit	0.700	30 & UP	4.40			
IRCC Credit	0.849					
White Roof Credit	0.550					

6A-5 FLOOR SUMMER POINT MULTIPLIERS (SPM)

SLAB-ON-GRADE EDGE INSULATION		RAISED CONCRETE		RAISED WOOD			
					POST OR PIER CONSTRUCTION	STEM WALL w/UNDER FLOOR INSULATION	ADJACENT
R-VALUE	SPM	*R*-VALUE	SPM	*R*-VALUE	SPM	SPM	SPM
0-2.9	-41.2	0-2.9	-.8	0-6.9	2.80	-4.7	2.2
3-4.9	-37.2	3-4.9	-1.3	7-10.9	1.34	-2.3	.8
5-6.9	-36.2	5-6.9	-1.3	11-18.9	1.06	-1.9	.7
7 & UP	-35.7	7 & UP	-1.3	19 & UP	.77	-1.5	.4

6A-6 INFILTRATION & INTERNAL GAINS (SPM)

Air Infiltration	3.44
Internal Gains	+6.77
Infiltration/Internal Gains (Combined)	10.21

6A-7 AIR HANDLER MULTIPLIERS (SPM)

Located in garage	1.00
Located in conditioned area	0.91
Located on exterior of building	1.02
Located in attic	1.11

6A-8 DUCT MULTIPLIERS (DM)

SUPPLY DUCTS IN:	DUCT *R*-VALUE	RETURN DUCTS IN: Unconditioned space	Attic/ RBS	Attic/ IRCC	Attic/ Cool roof	Conditio space
Unconditioned Space	4.2	1.118	1.111	1.112	1.089	1.107
	6.0	1.090	1.084	1.085	1.066	1.081
	8.0	1.071	1.066	1.067	1.051	1.064
Attic/Radiant Barrier (RBS)	4.2	1.072	1.066	—	—	1.061
	6.0	1.056	1.051	—	—	1.047
	8.0	1.045	1.041	—	—	1.037
Attic/Interior Radiation Control Coatings (IRCC)	4.2	1.099	—	1.092	—	1.084
	6.0	1.076	—	1.071	—	1.069
	8.0	1.061	—	1.057	—	1.052
Attic/Cool Roof	4.2	1.068	—	—	1.096	1.057
	6.0	1.051	—	—	1.071	1.043
	8.0	1.040	—	—	1.055	1.034
Conditioned Space	4.2	1.006	1.005	1.007	1.008	1.000
	6.0	1.005	1.004	1.005	1.006	1.000
	8.0	1.004	1.003	1.004	1.005	1.000

6A-9 COOLING SYSTEM MULTIPLIERS (CSM)

SYSTEM TYPE		COOLING SYSTEM MULTIPLIERS (CSM)										
Central Units (SEER)	Rating		7.5-7.9	8.0-8.4	8.5-8.8	8.9-9.4	9.5-9.9	10.0-10.4	10.5-10.9	11.0-11.4	11.5-11.9	12.0-1
	CSM		.45	.43	.40	.38	.36	.34	.32	.31	.30	.28
PTAC & Room Units (EER)	Rating	12.5-12.9	13.0-13.4	13.5-13.9	14.0-14.4	14.5-14.9	15.0-15.4	15.5-15.9	16.0-16.4	16.5-16.9	17.0-17.4	17.5 &
	CSM	.27	.26	.25	.24	.24	.23	.22	.21	.21	.20	.19

GLASS	ORIENTATION	OVERHANG LENGTH OH (FEET)	GLASS AREA (SQ. FT)	SINGLE-PANE WINTER POINT MULTIPLIER		DUBLE-PANE WINTER POINT MULTIPLER		WINTER OH FACTOR (from 6A-10)	AS-BUILT GLASS WINTER PTS
				CLEAR	TINT (2)	CLEAR	TINT (2)		
	W	1.5	15			20.73		1.01	314
	N	1.5	9			24.58		1.001	221
	E	1.5	30			18.79		1.018	574
		0	0						0
		0	0						0
		0	0						0
		0	0						0
		0	0						0
		0	0						0
		0	0						0
		0	0						0
		0	0						0
		0	0						0
		0	0						0
		0	0						0
		0	0						0
		0	0						0
		0	0						0
		0	0						0
		0	0						0
		0	0						0
		0	0						0

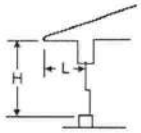

OVERHANG RATIO = $\frac{\text{OH LENGTH}}{\text{OH HEIGHT}}$

GLASS	COND FLOOR AREA	WEIGHTED GLASS MULTIPLIER	BASE GLASS SUBTOTAL	AS-BUILT GLASS SUBTOTAL
0.18	0.18	864	20.17	3137	1109

	COMPONENT DESCRIPTION	AREA	BASE SUMMER POINT MULT.	BASE WINTER POINTS	COMPONENT DESCRIPTION	AREA	WINTER POINT MULT. (6A-11 - 6A-15)	AS BUILT WINTER POINTS
WALL	EXTERIOR	850	3.4	2890	EXT FRAME R13	850	3.4	2890
	ADJACENT	0	3.3	0	ADJ FRAME R13	0	3.3	0
						0		0
						0		0
DOORS	EXTERIOR	40	12.3	492	EXT INSULATED	40	8.4	336
	ADJACENT	0	11.5	0	ADJ INSULATED	0	8	0
						0		0
CEILING	UNDER ATTIC OR SINGLE ASSEMBLY	864	2.05	1771	ATTIC R30	864	2.05	1771
					RBS/IECC/white roof (3)	0	1.2	0
	BASE CEILING AREA EQUALS FLOOR AREA DIRECTLY UNDER CEILING. AS-BUILT CEILING AREA EQUALS ACTUAL CEILING SQUARE FOOTAGE							
FLOOR	SLAB (PERIMETER)	118	18.8	2218	SLAB	118	18.8	2218.4
	RAISED (AREA)	0	1.38	0		0		0
	FOR SLAB-ON-GRADE USE PERIMITER LENGTH AROUND CONDITIONED FLOOR, FOR RAISED FLOORS USE AREA OVER UNCONDITIONED SPACE							
INFILTRATION & INTERNAL GAINS		864	-0.58	-501		864	-0.58	-501
		USE TOTAL FLOOR AREA OF CONDITIONED SPACE						

TOTAL COMPONENT BASE WINTER POINTS	10007	TOTAL COMPONENT AS-BUILT WINTER POINTS	7824

HEATING SYSTEM	BASE HEATING SYSTEM MULTIPLIER	TOTAL BASE WINTER POINTS	BASE HEATING POINTS	TOTAL AS-BUILT WIN. PTS.	AS-BUILT DM (6A-17)	AS-BUILT DSM (6A-20)	AS-BUILT AHU (6A-16)	AS-BUILT CMS (6A-18)	AS-BUILT CCM (6A-21)	AS-BUILT HEATING POINTS
	0.554	10007	**5544**	7824	1.069	1.17	0.93	0.43	1	**3913**

TOTAL	BASE COOLING POINTS (From P2)	BASE HEATING POINTS	BASE H/W PTS. (From P2)	0.85	TOTAL BASE PTS. (Enter on P1)	AS-BUILT COOLING POINTS (From P2)	AS-BUILT HEATING POINTS	AS-BUILT H/W PTS. (From P2)	TOTAL AS-BUILT PTS. (Enter on P1)
	3206	5544	5270	14020	**11917**	2615	3913	5142	**11671**

(1) H = HORIZONTAL GLASS (SKYLIGHTS)

(2) FOR GLASS WITH KNOW SHGC, SEE SEC. 2.1.1 OF APPENDIX G-C of the *FBC, Residential.* TINT MULTIPLIERS MAY BE USED FOR GLASS WITH SOLAR SCREENS, FILM, OR TINT

(3) MUST MEET CRITERIA OF APPENDIX G-C4.2.1.5 of the *FBC, Residential.*

SELECT BY OR

OH Ratio	.00-.11	.12-.17	.18-.26	.27-.35	.36-.46	.47-.57	.58-.70	.71-.83	.84-1.18	1.19-1.72	1.73-2.73	2.74 & u
North	1.00	1.000	1.001	1.003	1.005	1.009	1.011	1.014	1.016	1.021	1.024	1.027
Northeast	1.00	0.998	1.001	1.008	1.015	1.023	1.029	1.035	1.040	1.049	1.056	1.061
East	1.00	1.007	1.018	1.040	1.069	1.109	1.150	1.198	1.242	1.338	1.429	1.507
Southeast	1.00	1.014	1.043	1.111	1.202	1.332	1.472	1.635	1.787	2.113	2.412	2.650
South	1.00	0.994	1.032	1.142	1.308	1.563	1.845	2.175	2.471	3.042	3.450	3.661
Southwest	1.00	1.006	1.025	1.070	1.131	1.217	1.308	1.413	1.508	1.708	1.888	2.031
West	1.00	1.002	1.010	1.027	1.049	1.077	1.102	1.128	1.149	1.187	1.217	1.238
Northwest	1.00	0.999	1.000	1.004	1.008	1.012	1.016	1.019	1.022	1.028	1.032	1.036
OH Length	0.0'	1.0'	1.5'	2.0'	3.0'	3.5'	4.5'	5.5'	6.5'	9.5'	14.0'	20.0'

6A-11 WALL WINTER POINT MULTIPLIERS (WPM)

FRAME					CONCRETE BLOCK (NORMAL WT)				FACE BRICK				LOG		
	WOOD		STEEL			INTERIOR INSULATION		EXT. INSUL.	R-VALUE	WOOD FR	R-VALUE	BLOCK		6 INCH	8 INCH
R-VALUE	EXT	ADJ	EXT	ADJ	R-VALUE	EXT	ADJ	EXT	0-6.9	12.6	0-2.9	7.9	R-VALUE	EXT	EXT
0-6.9	11.1	10.4	15.1	13.1	0-2.9	11.2	6.8	11.2	7-10.9	4.2	3-6.9	5.7	0-2.9	4.5	3.0
7-10.9	4.4	4.4	7.3	6.6	3-4.9	7.3	5.1	5.6	11-18.9	3.5	7-9.9	3.8	3-6.9	2.8	2.2
11-12.9	3.7	3.6	5.7	5.2	5-6.9	5.7	4.2	4.3	19-25.9	2.2	10 & UP	3.0	7 & UP	2.1	1.7
13-18.9	3.4	3.3	5.2	4.9	7-10.9	4.6	3.5	3.3	26 & UP	1.4					
19-25.9	2.2	2.2	4.6	4.4	11-18.9	3.0	2.6	2.2							
26 & Up	1.5	1.5	2.7	2.6	19-25.9	1.9	1.7								
					26 & UP	1.3	1.2								

6A-12 DOOR WINTER POINT MULTIPLIERS (WPM)

DOOR TYPE	EXTERIOR	ADJACENT
WOOD	12.3	11.5
INSULATED	8.4	8.0

6A-13 CEILING WINTER POINT MULTIPLIERS (WPM)

UNDER ATTIC		SINGLE ASSEMBLY		CONCRETE DECK ROOF		
					CEILING TYPE	
R-VALUE	WPM	R-VALUE	WPM	R-VALUE	EXPOSED	DROPPED
19-21.9	2.70	10-10.9	2.87	10-13.9	3.16	2.91
22-25.9	2.45	11-12.9	2.70	14-20.9	2.31	2.14
26-29.9	2.22	13-18.9	2.40	21 & UP	1.47	1.47
30-37.9	2.05	19-25.9	1.86			
38 & UP	1.81	26-29.9	1.54			
RBS Credit	0.850	30 & UP	1.43			
IRCC Credit	0.912					
White Roof Credit	1.044					

6A-14 FLOOR WINTER POINT MULTIPLIERS (WPM)

SLAB-ON-GRADE EDGE INSULATION		RAISED CONCRETE		RAISED WOOD			
					POST OR PIER CONSTRUCTION	STEM WALL w/UNDER FLOOR INSULATION	ADJACENT
R-VALUE	WPM	R-VALUE	WPM	R-VALUE	WPM	WPM	WPM
0-2.9	18.8	0-2.9	9.9	0-6.9	5.77	3.5	10.4
3-4.9	9.3	3-4.9	5.1	7-10.9	2.20	1.6	4.4
5-6.9	7.6	5-6.9	3.6	11-18.9	1.55	1.2	3.6
7 & UP	7.0	7 & UP	2.9	19 & UP	0.88	.8	2.2

6A-15 INFILTRATION & INTERNAL GAINS (WPM)

Air Infiltration	2.13
Internal Gains	-2.72
Infiltration/Internal Gains (Combined)	-0.58

6A-16 AIR HANDLER MULTIPLIERS (WPM)

Located in garage	1.00
Located in conditioned area	0.93
Located on exterior of building	1.07
Located in attic	1.10

6A-17 DUCT MULTIPLIERS (DM)

SUPPLY DUCTS IN:	DUCT R-VALUE	RETURN DUCTS IN: Unconditioned space	Attic/ RBS	Attic/ IRCC	Attic/ Cool roof	Condition space
Unconditioned Space	4.2	1.093	1.086	1.088	1.089	1.081
	6.0	1.069	1.064	1.065	1.066	1.060
	8.0	1.053	1.049	1.051	1.051	1.046
Attic/Radiant Barrier (RBS)	4.2	1.067	1.059	—	—	1.052
	6.0	1.051	1.045	—	—	1.040
	8.0	1.040	1.036	—	—	1.032
Attic/Interior Radiation Control Coatings (IRCC)	4.2	1.096	—	1.088	—	1.077
	6.0	1.072	—	1.066	—	1.057
	8.0	1.056	—	1.052	—	1.045
Attic/Cool Roof	4.2	1.104	—	—	1.096	1.083
	6.0	1.076	—	—	1.071	1.061
	8.0	1.059	—	—	1.055	1.048
Conditioned Space	4.2	1.008	1.007	1.010	1.008	1.000
	6.0	1.006	1.005	1.007	1.006	1.000
	8.0	1.005	1.004	1.006	1.005	1.000

6A-18 HEATING SYSTEM MULTIPLIERS (HSM) All Climate Zones

SYSTEM TYPE		HEATING SYSTEM MULTIPLIERS (HSM)							
Central Heat Pump Units	HSPF	7.4-7.6	7.7-7.8	7.9-8.3	8.4-8.8	8.9-9.3	9.4-9.8	9.9-10.3	10.4-10.8
	HSM	.46	.44	.43	.41	.38	.36	.34	.33
PTHP	COP	2.50-1.69	2.70-2.89	2.90-3.09	3.10-3.29	3.30-3.49	3.50-3.69	3.70-3.89	3.90-4.19
	HSM	.40	.37	.34	.32	.30	.29	.27	.26
Gas Heating	AFUE	76- 77	78	79- 82	83- 85	86- 89	90- 92	93- 95	96- 98
	HSM	.46	.44	.43	.41	.38	.36	.34	.33
Electric Strip		1.0							

SYSTEM TYPE	Cooling credit multipliers (CCM)
Ceiling Fans	.95*
Cross Ventilation	.95*
Whole House Fan	.95*
Multizone	.95
Programmable Thermostat	.95

Credit may be taken for only one system type concurrently.

TYPE CREDIT	Prescriptive requirements	Multiplier
Air-tight Duct Credit[1]	Appx G-C5.2.2.1.1	1.00
Factory-sealed AHU Credit[2]	Appx G-C5.2.2.1.2	0.95

[1]Duct Sealing Multiplier (DSM) shall be 1.15 (summer) or 1.17 (winter) unless Air-tight Duct Cr is demonstrated by test report.
[2]Multiply Factory-sealed AHU credit by summer (Table 6A-7) or winter (Table 6A-16) AHU multiplier. Insert total in the "As-Built AHU" box on page 2 or 4.

A-21 HEATING CREDIT MULTIPLIERS (HCM)

SYSTEM TYPE		HEATING CREDIT MULTIPLIERS (HCM)
Programmable Thermostat	HCM	.95
Multizone	HCM	.95

A-22 HOT WATER MULTIPLIERS (HWM)

SYSTEM TYPE									
Electric Resistance	EF	.80-.81	.82-.83	.84-.85	.86-.87	.88-.90	.91-.93	.94-.96	.97 &U
	HWM	3020	2946	2876	2809	2746	2655	2571	2491
Gas Water Heating	EF	.54	.55	.56	.57	.58	.59	.60	.61
	HWM	3020	2946	2876	2809	2746	2655	2571	2491
	EF	.62-.63	.64-.65	.66-.70	.71-.75	.76-.80	.81-.83	.84-.86	.87 & U
	HWM	2346	2217	2101	1738	1456	1196	1055	933

A-23 HOT WATER CREDIT MULTIPLIERS (HWCM)

SYSTEM TYPE		HOT WATER CREDIT MULTIPLIERS (HWCM)				
Heat Recovery Unit	With	Air Conditioner		Heat Pump		
	HWCM	.84		.78		
Add-on Dedicated Heat Pump (without tank)	EF	2.0-2.49	2.5-2.99	3.0-3.49	3.5 & Up	
	HWCM	.44	.35	.29	.25	
Add-on Solar Water Heater (without tank)	EF	1.0-1.9	2.0-2.9	3.0-3.9	4.0-4.9	5.0 & Up
	HWCM	.84	.42	.28	.21	.17

NOTE: An HWM must be used in conjunction with all HWCM. See Table 6A-22. EF Means Energy F

A-24 INFILTRATION REDUCTION COMPLIANCE CHECKLIST

COMPONENTS	SECTION	REQUIREMENTS FOR EACH PRACTICE	CHI
Exterior Windows & Doors	N1106.AB.1.1	Max: 3 cfm/sq. ft. window area; .5cfm/sq. ft. door area.	
Exterior & Adjacent Walls	N1106.AB.1.2.1	Caulk, gasket, weatherstrip or seal between: windows/doors & frames, surrounding wall; foundation & wall sole or sill plate; joints between exterior wall panels at corners; CFM utility penetrations; between wall panels & top/bottom plates; between walls & floor. EXCEPTION: Frame walls where a continous infiltration barrier is installed that extends from, and is sealed to, the foundation to the top plate.	
Floors	N1106.AB.1.2.2	Penetrations/openings >1/8" sealed unless backed by truss or joint members. EXCEPTION: Frame floors where a continuous infiltration barrier is installed that is sealed to the perimeter, penetrations and seams.	
Ceilings	N1106.AB.1.2.3	Seal: Between walls & ceilings: penetrations of ceiling plane of top floor; around shafts, chases, soffits, chimneys, cabinets sealed to continuous air barrier; gaps in gyp board & top plate; attic access. EXCEPTION: Frame ceilings where a continuous infiltration barrier is installed that is sealed at the perimeter, at penetrations and seams.	
Recessed Lighting Fixtures	N1106.AB.1.2.4	Type IC rated with no penetrations, sealed; or Type IC or non-IC rated, installed inside a sealed box with 1/2" clearance & 3" from insulation; or Type IC rated with <2.0 cfm from conditioned space, tested.	
Multiple Story Houses	N1106.AB.1.2.5	Air barrier on perimeter of floor cavity between floors.	
Additional Infiltration reqts	N1106.AB.1.3	Exhaust fans vented to outdoors, dampers; combustion space heaters comply with NFPA, have combustion air.	

A-25 OTHER PRESCRIPTIVE MEASURES (must be met or exceeded by all residences.)

COMPONENTS	SECTION	REQUIREMENTS	CHI
Water Heaters	N1112.AB.3	Comply with efficiency requirements in Table N1112.AB.3. Switch or clearly marked circuit breaker (electric) or cutoff (gas) must be provided. External or built-in heat trap required for vertical pipe risers.	
Swimming Pools & Spas	N1112.AB.2.3	Spas & heated pools must have covers (except solar heated). Noncommercial pools must have a pump timer. Gas spa & pool heaters must have a minimum thermal efficiency of 78%.	
Shower Heads	N1112.AB.2.4	Water flow must be restricted to no more than 2.5 gallons per minute at 80 psig.	
Air Distribution Systems	N1110.AB	All ducts, fittings, mechanical equipment and plenum chambers shall be mechanically attached, sealed, insulated, and installed in accordance with the criteria of Section N1110. Ducts in unconditioned attics: R-6 minimum insulation.	
HVAC Controls	N1107.AB.2	Separate readily accessible manual or automatic thermostat for each system.	
Insulation	N1104.AB.1 N1102.B.1.1	Ceilings–Min. R-19. Common walls–Frame R-11 or CBS R-3 both sides. Common ceiling & floors R-11.	

ESTIMATED ENERGY PERFORMANCE INDEX* =
The lower the Energy Performance Index, the more efficient the home.

New Home or addition	New
Single family or multiple family	Single
Number of units, (if multi-family)	
Number of bedrooms	2
Is this a worst case? (yes or no)	Yes
Conditioned floor area	864 sq. ft.
Glass type & area	
a. U-Factor: Double Default	54 sq. ft.
(Or single or double Default)	sq. ft.
b. SHGC: Clear	sq. ft.
(Or clear or tint Default)	sq. ft.
Floor types, Insulation level	
a. Slab-on-grade, edge insulation	R= 0
b. Wood, raised	R=
c. Concrete, raised	R=
Wall types, Insulation level	
Exterior	
a. Wood frame	R= 13
b. Metal frame	R=
c. Concrete block	R=
d. Log	R=
e. Other	R=
Adjacent	
a. Wood frame	R=
b. Metal frame	R=
c. Concrete block	R=
d. Log	R=
e. Other	R=
Ceiling types, Insulation level	
a. Under attic	R= 30
b. Single assembly	R=
c. Knee walls/skylight walls	R=
d. Radiant barrier installed	R=

11.	Ducts, Location & Insulation Level	
	a. Supply ducts: attic	R= 6
	b. Return ducts: attic	R= 6
12.	Cooling systems	Capacity: 20 kBtu/hr
	a. Split system	SEER: 13
	b. Single package	SEER:
	c. Ground/water source	COP:
	d. Room unit	EER:
	e. PTAC	EER:
	f. Gas-driven	COP:
13.	Heating Systems	Capacity: 20 kBtu/hr
	a. Split system heat pump	HSPF: 7.8
	b. Single package heat pump	HSPF:
	c. Electric resistance	COP:
	d. Gas furnace, natural gas	AFUE:
	e. Gas furnace, LPG	AFUE:
	f. Gas-driven heat pump	Recov. EFF.:
14.	Water heating systems	
	a. Electric resistance	EF: .94
	b. Gas fired, natural gas	EF:
	c. Gas fired, LPG	EF:
	d. Solar System with tank	EF:
	e. Dedicated heat pump with tank	EF:
	f. Heat recovery unit	HeatRec%
	g. Other:	
15.	HVAC credits claimed (Alternate Point System Method only)	
	a. Ceiling fans	
	b. Cross ventilation	
	c. Whole house fan	
	d. Multizone cooling credit	
	e. Multizone heating credit	
	f. Programmable thermostat	

ertify that this home has complied with the Florida Energy Efficiency Code For Building through the above energy saving features which will talled (or exceeded) in this home before final inspection. Otherwise, a new EPL Display Card will be completed based on installed Code comp tures.

ilder Signature: _____ Date: _____

ldress of New Home: _____ City/FL Zip _____

COLUMBIA COUNTY BUILDING DEPARTMENT 6-25-09
RESIDENTIAL CHECK LIST REQUIRMENTS

MINIMUM PLAN REQUIREMENTS FOR THE FLORIDA BUILDING CODE RESIDENTIAL 2007 EFFECTIVE 1 MARCH 2009 & 2009 SUPPLEMENTS EFFECTIVE 1 MARCH 2009, ONE (1) AND TWO (2) FAMILY DWELLINGS with Supplements and Revision, OF THE NATIONAL ELECTRICAL 2008

ALL REQUIREMENTS ARE SUBJECT TO CHANGE

ALL BUILDING PLANS MUST INDICATE COMPLIANCE with the Current 2007 FLORIDA BUILDING CODES RESIDENTIAL EFFECTIVE 1 MARCH 2009 & 2009 SUPPLEMENTS EFFECTIVE 1 MARCH 2009. ALL PLANS OR DRAWINGS SHALL PROVIDE CALCULATIONS AND DETAILS THAT HAVE THE SEAL AND SIGNATURE OF A CERTIFIED ARCHITECT OR ENGINEER REGISTERED IN THE STATE OF FLORIDA, OR ALTERNATE METHODOLOGIES, APPROVED BY THE STATE OF FLORIDA BUILDING COMMISSION FOR ONE-AND-TWO FAMILY DWELLINGS.

FOR DESIGN PURPOSES THE FOLLOWING BASIC WIND SPEEDS ARE PER FIGURE R301.2(4) of the FLORIDA BUILDING CODES RESIDENTIAL (Florida Wind speed map) **SHALL BE USED.**

WIND SPEED LINE SHALL BE DEFINED AS FOLLOWS: THE CENTERLINE OF INTERSTATE 75.

ALL BUILDINGS CONSTRUCTED EAST OF SAID LINE SHALL BE -------- 100 MPH
ALL BUILDINGS CONSTRUCTED WEST OF SAID LINE SHALL BE --------110 MPH
NO AREA IN COLUMBIA COUNTY IS IN A WIND BORNE DEBRIS REGION

	GENERAL REQUIREMENTS: **APPLICANT – PLEASE CHECK ALL APPLICABLE BOXES BEFORE SUBMITTAL**			Items to Include- Each Box shall be Circled as Applicable		
				Yes	**No**	**N/A**
1	Two (2) complete sets of plans containing the following:					
2	All drawings must be clear, concise, drawn to scale, details that are not used shall be marked void					
3	Condition space (Sq. Ft.) 856		Total (Sq. Ft.) under roof 856	IIIIIIII	IIIIIIII	IIIII

Designers name and signature shall be on all documents and a licensed architect or engineer, signature and official embossed seal shall be affixed to the plans and documents as per the FLORIDA BUILDING CODES RESIDENTIAL R101.2.1

Site Plan information including:

4	Dimensions of lot or parcel of land	✓		
5	Dimensions of all building set backs	✓		
6	Location of all other structures (include square footage of structures) on parcel, existing or proposed well and septic tank and all utility easements.	✓		
7	Provide a full legal description of property.	✓		

Wind-load Engineering Summary, calculations and any details required

GENERAL REQUIREMENTS: APPLICANT – PLEASE CHECK ALL APPLICABLE BOXES BEFORE SUBMITTAL		Items to Include- Each Box shall be Circled as Applicable		
8	**Plans or specifications must show compliance with FBCR Chapter 3**	IIIIII	IIIII	IIIIII
		YES	**NO**	**N/A**
9	Basic wind speed (3-second gust), miles per hour	✓		
10	(Wind exposure – if more than one wind exposure is used, the wind exposure and applicable wind direction shall be indicated)	✓		
11	Wind importance factor and nature of occupancy	✓		
12	The applicable internal pressure coefficient, Components and Cladding	✓		
13	The design wind pressure in terms of psf (kN/m²), to be used for the design of exterior component, cladding materials not specifally designed by the registered design professional.	✓		

Elevations Drawing including:

14	All side views of the structure	✓		
15	Roof pitch	✓		
16	Overhang dimensions and detail with attic ventilation	✓		
17	Location, size and height above roof of chimneys			✓
18	Location and size of skylights with Florida Product Approval			✓
18	Number of stories	✓		
20A	Building height from the established grade to the roofs highest peak	✓		

Floor Plan including:

20	Dimensioned area plan showing rooms, attached garage, breeze ways, covered porches, deck, balconies	✓		
21	Raised floor surfaces located more than 30 inches above the floor or grade			✓
22	All exterior and interior shear walls indicated	✓		
23	Shear wall opening shown (Windows, Doors and Garage doors)	✓		
24	Show compliance with Section FBCR 310 Emergency escape and rescue opening shown in each bedroom (net clear opening shown) and Show compliance with Section FBCR 613.2 where the opening of an operable window is located more than 72 inches above the finished grade or surface below, the lowest part of the clear opening of the window shall be a minimum of 24 inches above the finished floor of the room in which the window is located. Glazing between the floor and 24 inches shall be fixed or have openings through which a 4-inch-diameter sphere cannot pass.	✓		
25	Safety glazing of glass where needed			
26	Fireplaces types (gas appliance) (vented or non-vented) or wood burning with Hearth (see chapter 10 of FBCR)			✓
27	Show stairs with dimensions (width, tread and riser and total run) details of guardrails, Handrails			✓
28	Identify accessibility of bathroom (see FBCR SECTION 322)	✓		

All materials placed within opening or onto/into exterior walls, soffits or roofs shall have Florida product approval number and mfg. installation information submitted with the plans (see Florida product approval form)

GENERAL REQUIREMENTS: APPLICANT – PLEASE CHECK ALL APPLICABLE BOXES BEFORE SUBMITTAL	Items to Include- Each Box shall be Circled as Applicable

FBCR 403: Foundation Plans

		YES	NO	N/A
29	Location of all load-bearing walls footings indicated as standard, monolithic, dimensions, size and type of reinforcing.	✓		
30	All posts and/or column footing including size and reinforcing	✓		
31	Any special support required by soil analysis such as piling.			✓
32	Assumed load-bearing valve of soil 1000 Pound Per Square Foot	✓		
33	Location of horizontal and vertical steel, for foundation or walls (include # size and type) **For** structures with foundation which establish new electrical utility companies service connection a Concrete Encased Electrode will be required within the foundation to serve as an grounding electrode system. Per the National Electrical Code article 250.52.3	✓		

FBCR 506: CONCRETE SLAB ON GRADE

34	Show Vapor retarder (6mil. Polyethylene with joints lapped 6 inches and sealed)	✓		
35	Show control joints, synthetic fiber reinforcement or welded fire fabric reinforcement and Supports	✓		

FBCR 320: PROTECTION AGAINST TERMITES

36	Indicate on the foundation plan if soil treatment is used for subterranean termite prevention or Sub mit other approved termite protection methods. **Protection shall be provided by registered termiticides**	✓		

FBCR 606: Masonry Walls and Stem walls (load bearing & shear Walls)

37	Show all materials making up walls, wall height, and Block size, mortar type	✓		
38	Show all Lintel sizes, type, spans and tie-beam sizes and spacing of reinforcement			✓

Metal frame shear wall and roof systems shall be designed, signed and sealed by Florida Prof. Engineer or Architect

Floor Framing System: First and/or second story

N/A

39	Floor truss package shall including layout and details, signed and sealed by Florida Registered Professional Engineer	✓		
40	Show conventional floor joist type, size, span, spacing and attachment to load bearing walls, stem walls and/or priers	✓		
41	Girder type, size and spacing to load bearing walls, stem wall and/or priers			
42	Attachment of joist to girder			
43	Wind load requirements where applicable			
44	Show required under-floor crawl space			

45	Show required amount of ventilation opening for under-floor spaces	✓		✓
46	Show required covering of ventilation opening	✓		✓
47	Show the required access opening to access to under-floor spaces	✓		✓
48	Show the sub-floor structural panel sheathing type, thickness and fastener schedule on the edges & intern of the areas structural panel sheathing	✓		✓
49	Show Draftstopping, Fire caulking and Fire blocking	✓		
50	Show fireproofing requirements for garages attached to living spaces, per FBCR section 309	✓		✓
51	Provide live and dead load rating of floor framing systems (psf).	✓		✓

FBCR CHAPTER 6 WOOD WALL FRAMING CONSTRUCTION

	GENERAL REQUIREMENTS: APPLICANT – PLEASE CHECK ALL APPLICABLE BOXES BEFORE SUBMITTAL	Items to Include- Each Box shall be Circled as Applicable		
		YES	NO	N/A
52	Stud type, grade, size, wall height and oc spacing for all load bearing or shear walls	✓		
53	Fastener schedule for structural members per table FBCR 602.3 are to be shown	✓		
54	Show Wood structural panel's sheathing attachment to studs, joist, trusses, rafters and structural members, showing fastener schedule attachment on the edges & intermediate of the areas structural panel sheathing	✓		
55	Show all required connectors with a max uplift rating and required number of connectors and oc spacing for continuous connection of structural walls to foundation and roof trusses or rafter systems	✓		
56	Show sizes, type, span lengths and required number of support jack studs, king studs for shear wall opening and girder or header per FBCR Table 502.5 (1)	✓		
57	Indicate where pressure treated wood will be placed	✓		
58	Show all wall structural panel sheathing, grade, thickness and show fastener schedule for structural panel sheathing edges & intermediate areas	✓		
59	A detail showing gable truss bracing, wall balloon framing details or/ and wall hinge bracing detail			

FBCR :ROOF SYSTEMS:

60	Truss design drawing shall meet section FBCR 802.10 Wood trusses	✓		
61	Include a layout and truss details, signed and sealed by Florida Professional Engineer	✓		
62	Show types of connector's assemblies' and resistance uplift rating for all trusses and rafters	✓		
63	Show gable ends with rake beams showing reinforcement or gable truss and wall bracing details			
64	Provide dead load rating of trusses	✓		

FBCR 802:Conventional Roof Framing Layout

N/A

65	Rafter and ridge beams sizes, span, species and spacing			
66	Connectors to wall assemblies' include assemblies' resistance to uplift rating			
67	Valley framing and support details			
68	Provide dead load rating of rafter system			

FBCR Table 602.3(2) & FBCR 803 ROOF SHEATHING

69	Include all materials which will make up the roof decking, identification of structural panel sheathing, grade, thickness	✓		
70	Show fastener Size and schedule for structural panel sheathing on the edges & intermediate areas	✓		

FBCR ROOF ASSEMBLIES FRC Chapter 9

71	Include all materials which will make up the roof assembles covering	✓		
72	Submit Florida Product Approval numbers for each component of the roof assembles covering	✓		

FBCR Chapter 11 Energy Efficiency Code for residential building

Residential construction shall comply with this code by using the following compliance methods in the FBCR chapter11 Residential buildings compliance methods. **Two of the required forms are to be submitted**, *N1100.1.1.1 As an alternative to the computerized Compliance Method A, the Alternate Residential Point System Method hand calculation, Alternate Form 600A, may be used. All requirements specific to this calculation are located in Sub appendix C to Appendix G. Buildings complying by this alternative shall meet all mandatory requirements of this chapter. Computerized versions of the Alternate Residential Point System Method shall not be acceptable for code compliance.*

	GENERAL REQUIREMENTS: APPLICANT – PLEASE CHECK ALL APPLICABLE BOXES BEFORE SUBMITTAL	Items to Include- Each Box shall be Circled as Applicable		
		YES	NO	N/A
73	Show the insulation R value for the following areas of the structure	✓		
74	Attic space	✓		
75	Exterior wall cavity	✓		
76	Crawl space			✓

HVAC information

77	Submit two copies of a Manual J sizing equipment or equivalent computation study	✓		
78	Exhaust fans shown in bathrooms **Mechanical exhaust capacity of 50 cfm intermittent or 20 cfm continuous required**	✓		
79	Show clothes dryer route and total run of exhaust duct	✓		

Plumbing Fixture layout shown

80	All fixtures waste water lines shall be shown on the foundation plan	✓		
81	Show the location of water heater	✓		

Private Potable Water

City Water

82	Pump motor horse power			
83	Reservoir pressure tank gallon capacity			
84	Rating of cycle stop valve if used			

Electrical layout shown including

85	Show Switches, receptacles outlets, lighting fixtures and Ceiling fans	✓		
86	Show all 120-volt, single phase, 15- and 20-ampere branch circuits outlets required to be protected by **Ground-Fault Circuit Interrupter (GFCI) Article 210.8 A**	✓		
87	Show the location of smoke detectors & Carbon monoxide detectors	✓		
88	Show service panel, sub-panel, location(s) and total ampere ratings	✓		
89	On the electrical plans identify the electrical service overcurrent protection device for the main electrical service. This device shall be installed on the exterior of structures to serve as a disconnecting means for the utility company electrical service. Conductors used from the exterior disconnecting means to a panel or sub panel shall have four-wire conductors, of which one conductor shall be used as an equipment ground. Indicate if the utility company service entrance cable will be of the overhead or underground type. **For structures** with foundation which establish new electrical utility companies service connection a Concrete Encased Electrode will be required within the foundation to serve as an Grounding electrode system. Per the National Electrical Code article 250.52.3	✓		
90	Appliances and HVAC equipment and disconnects	✓		
91	Show all 120-volt, single phase, 15- and 20-ampere branch circuits supplying outlets installed in dwelling unit family rooms, dining rooms, living rooms, parlors, libraries, dens, bedrooms, sunrooms, recreation rooms, closets, hallways, or similar rooms or areas shall be protected by a listed **Combination arc-fault circuit interrupter,** Protection device.	✓		

Disclosure Statement for Owner Builders *If you as the applicant will be acting as an owner/builder under section 489.103(7) of the Florida Statutes, submit the required owner builder disclosure statement form.*

Notice Of Commencement

A notice of commencement form **recorded** in the Columbia County Clerk Office is required to be filed with the building department Before Any Inspections can be preformed.

GENERAL REQUIREMENTS: APPLICANT – PLEASE CHECK ALL APPLICABLE BOXES BEFORE SUBMITTAL	Items to Include- Each Box shall be Circled as Applicable

THE FOLLOWING ITEMS MUST BE SUBMITTED WITH BUILDING PLANS

		YES	NO	N/A
92	**Building Permit Application** A current Building Permit Application form is to be completed and submitted for all residential projects	✓		
93	**Parcel Number** The parcel number (Tax ID number) from the Property Appraiser (386) 758-1084 is required. A copy of property deed is also requested	✓		
94	**Environmental Health Permit or Sewer Tap Approval** A copy of a approved Columbia County Environmental Health (386) 758-1058	✓		
95	**City of Lake City** A permit showing an approved waste water sewer tap			✓
96	**Toilet facilities shall be provided for all construction sites**	✓		
97	**Town of Fort White** (386) 497-2321 If the parcel in the application for building permit is within the Corporate city limits of Fort White an approval land use development letter issued by the Town of Fort is required to be submitted with the application for a building permit.			✓

98	**Flood Information:** All projects within the Floodway of the Suwannee or Santa Fe Rivers shall require permitting through the Suwannee River Water Management District, before submitting a application to this office. Any project located within a flood zone where the base flood elevation (100 year flood) has been established shall meet the requirements of Section 8.5.2 of the Columbia County Land Development Regulations. Any project located within a flood zone where the base flood elevation has not been established (Zone A) shall meet the requirements of Section 8.5.3 of the Columbia County Land Development Regulations	✓		
99	CERTIFIED FINISHED FLOOR ELEVATIONS will be required on any project where the base flood elevation (100 year flood) has been established			
100	A development permit will also be required. Development permit cost is **$50.00**			
101	**Driveway Connection:** If the property does not have an existing access to a public road, then an application for a culvert permit (**$25.00**) must be made. If the applicant feels that a culvert is not needed, they may apply for a culvert waiver (**$50.00**). All culvert waivers are sent to the Columbia County Public Works Department for approval or denial.	✓		
102	**911 Address:** If the project is located in an area where a 911 address has not been issued, then application for a 911address must be applied for and **received** through the Columbia County Emergency Management Office of 911 Addressing Department (386) 758-1125	✓		

Section R101.2.1 of the Florida Building Code Residential:

The provisions of Chapter 1, Florida Building Code, Building shall govern the administration and enforcement of the Florida Building Code, Residential.

Section 105 of the Florida Building Code defines the:

Time limitation of application.

An application for a permit for any proposed work shall be deemed to have been abandoned 180 days after the date of filing, unless such application has been pursued in good faith or a permit has been issued; except that the building official is authorized to grant one or more extensions of time for additional periods not exceeding 90 days each. The extension shall be requested in writing and justifiable cause demonstrated.

Single-family residential dwelling.

Section 105.3.4 A building permit for a single-family residential dwelling must be issued within 30 working days of application therefor unless unusual circumstances require a longer time for processing the application or unless the permit application fails to satisfy the Florida Building Code or the enforcing agency's laws or ordinances.

Permit intent.

Section 105.4.1: A permit issued shall be constructed to be a license to proceed with the work and not as authority to violate, cancel, alter or set aside any of the provisions of the technical codes, nor shall issuance of a permit prevent the building official from thereafter requiring a correction of errors in plans, construction or violations of this code. Every permit issued shall become invalid unless the work authorized by such permit is commenced within six months after its issuance, or if the work authorized by such permit is suspended or abandoned for a period of six months after the time the work is commenced.

<u>If work has commenced.</u>

Section 105.4.1.1: If work has commenced and the permit is revoked, becomes null and void, or expires because of lack of progress or abandonment, a new permit covering the proposed construction shall be obtained before proceeding with the work.

<u>New Permit.</u>

Section 105.4.1.2: If a new permit is not obtained within 180 days from the date the initial permit became null and void, the building official is authorized to require that any work which has been commenced or completed be removed from the building site. Alternately, a new permit may be issued on application, providing the work in place and required to complete the structure meets all applicable regulations in effect at the time the initial permit became null and void and any regulations which may have become effective between the date of expiration and the date if issuance of the new permit.

<u>Work Shall Be:</u>

Section 105.4.1.3: Work shall be considered to be in active progress when the permit has received an approved inspection within 180 days. This provision shall not be applicable in case of civil commotion or strike or when the building work is halted due directly to judicial injunction, order or similar process.

<u>The Fee:</u>

Section 105.4.1.4: The fee for renewal reissuance and extension of a permit shall be set forth by the administrative authority.

When the submitted application is approved for permitting the applicant will be notified by phone as to the date and time a building permit will be prepared and issued by the Columbia County Building & Zoning Department

SUBCONTRACTOR VERIFICATION FORM

APPLICATION NUMBER 1202-37 CONTRACTOR JAMES JOHNSTON PHONE 365-5995

THIS FORM MUST BE SUBMITTED PRIOR TO THE ISSUANCE OF A PERMIT

In Columbia County one permit will cover all trades doing work at the permitted site. It is REQUIRED that we have records of the subcontractors who actually did the trade specific work under the permit. Per Florida Statute 440 and Ordinance 89-6, a contractor shall require all subcontractors to provide evidence of workers' compensation or exemption, general liability insurance and a valid Certificate of Competency license in Columbia County.

Any changes, the permitted contractor is responsible for the corrected form being submitted to this office prior to the start of that subcontractor beginning any work. Violations will result in stop work orders and/or fines.

ELECTRICAL 234	Print Name Michael Conner License #: ER 13013192	Signature Michael S Conner Phone #: 386-965-9605
MECHANICAL/ A/C 13	Print Name Derrick Williams License #: CAC 1816963	Signature Phone #: 386-754-1987
PLUMBING/ GAS W2 5/10	Print Name Maurice E Perkins License #: CFC1426278	Signature Maurice E Perkins Phone #: (386) 364-4439
ROOFING	Print Name James Johnston License #: CRC 1328128	Signature Phone #: 365-5995
SHEET METAL	Print Name License #:	Signature Phone #:
FIRE SYSTEM/ SPRINKLER	Print Name License#:	Signature Phone #:
SOLAR	Print Name License #:	Signature Phone #:

Specialty License	License Number	Sub-Contractors Printed Name	Sub-Contractors Signature
MASON	—	—	—
CONCRETE FINISHER	CRC 1328128	JAMES H. Johnston, III	
FRAMING	"	"	
INSULATION	"	"	
STUCCO	N/A	—	—
DRYWALL	CRC 1328128	JAMES H Johnston, III	
PLASTER	"	" " "	
CABINET INSTALLER	"	" " "	
PAINTING	"	" " "	
ACOUSTICAL CEILING	—	—	—
GLASS	—	—	—
CERAMIC TILE	N/A	— N/A	— N/A
FLOOR COVERING			
ALUM/VINYL SIDING	—	—	—
GARAGE DOOR	—	—	—
METAL BLDG ERECTOR	—	—	—

F. S. 440.103 Building permits; identification of minimum premium policy.--Every employer shall, as a condition to applying for and receiving a building permit, show proof and certify to the permit issuer that it has secured compensation for its employees under this chapter as provided in ss. 440.10 and 440.38, and shall be presented each time the employer applies for a building permit.

STATE OF FLORIDA
DEPARTMENT OF HEALTH
APPLICATION FOR CONSTRUCTION PERMIT

Permit Application Number 12-0087E

---------- PART II - SITEPLAN ----------

Scale: Each block represents 10 feet and 1 inch = 40 feet.

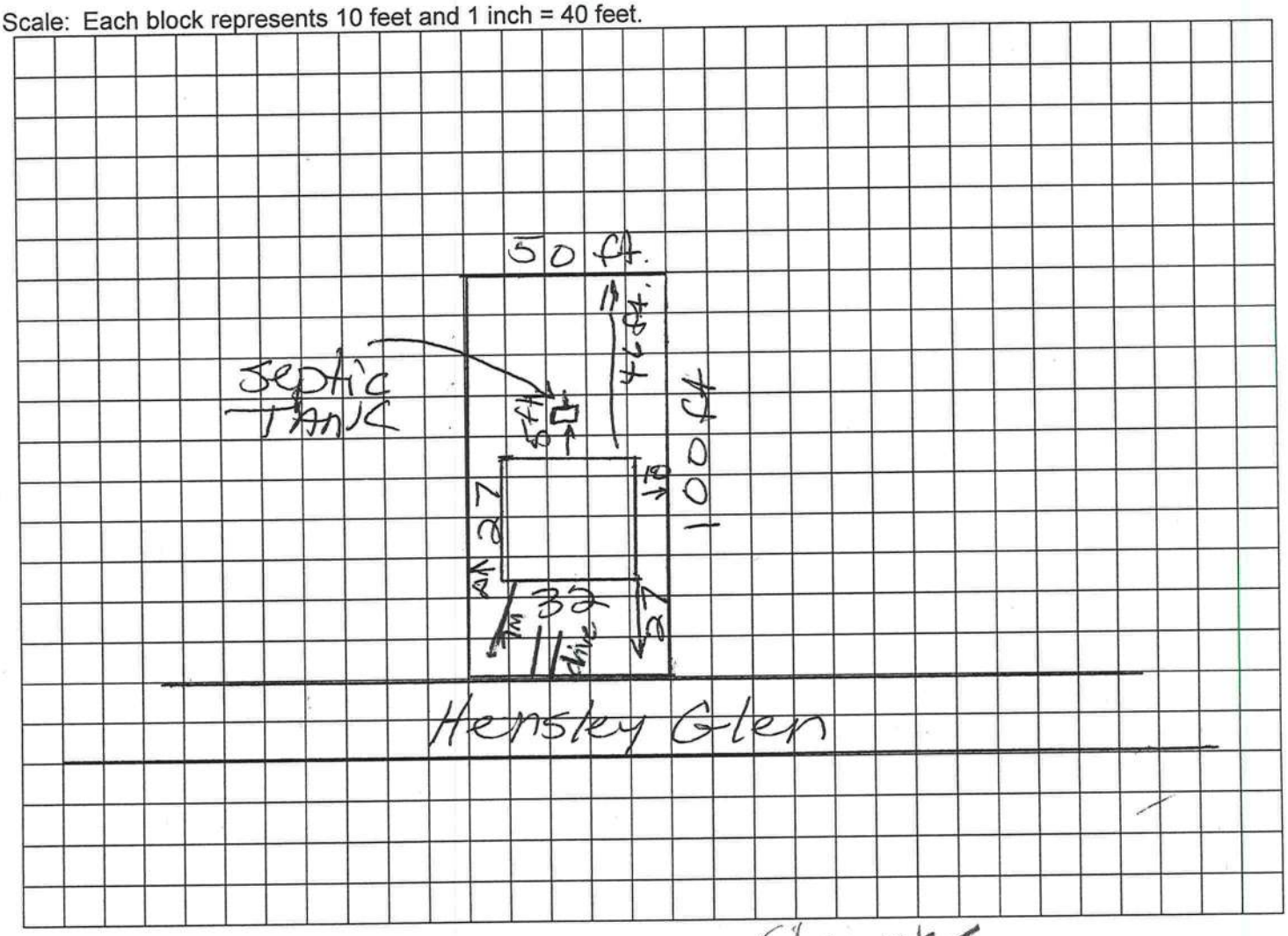

Notes: City water

Site Plan submitted by: Richard Keen

Plan Approved X Not Approved ____ Date 2/27/12

By [signature] Columbia County Health Department

ALL CHANGES MUST BE APPROVED BY THE COUNTY HEALTH DEPARTMENT

E

125.00

LC

STATE OF FLORIDA
DEPARTMENT OF HEALTH
ONSITE SEWAGE TREATMENT AND DISPOSAL SYSTEM
APPLICATION FOR CONSTRUCTION PERMIT

PERMIT NO. 12-0087E
DATE PAID: 2/23/12
FEE PAID: 125.00
RECEIPT #: 1816458

APPLICATION FOR:
[ ] New System [✓] Existing System [ ] Holding Tank [ ] Innovative
[ ] Repair [ ] Abandonment [ ] Temporary [ ] _____

APPLICANT: Betty Murphy

AGENT: Richard Keen TELEPHONE: 623-4629

MAILING ADDRESS: 1256 SW CR 240 Lake City FL 32025

==========

TO BE COMPLETED BY APPLICANT OR APPLICANT'S AUTHORIZED AGENT. SYSTEMS MUST BE CONSTRUCTED BY A PERSON LICENSED PURSUANT TO 489.105(3)(m) OR 489.552, FLORIDA STATUTES. IT IS THE APPLICANT'S RESPONSIBILITY TO PROVIDE DOCUMENTATION OF THE DATE THE LOT WAS CREATED OR PLATTED (MM/DD/YY) IF REQUESTING CONSIDERATION OF STATUTORY GRANDFATHER PROVISIONS.

==========

PROPERTY INFORMATION

LOT: 7 BLOCK: 1 SUBDIVISION: Thompson S/D PLATTED: 1963

PROPERTY ID #: 00-00-00-11634-000 ZONING: Res. I/M OR EQUIVALENT: [Y / N]

PROPERTY SIZE: .114 ACRES WATER SUPPLY: [ ] PRIVATE (PUBLIC) [ ]<=2000GPD [ ]>2000GPD

IS SEWER AVAILABLE AS PER 381.0065, FS? [Y / (N)] DISTANCE TO SEWER: _____ FT

PROPERTY ADDRESS: 134 NW Hensley Glen Lake City FL 32055

DIRECTIONS TO PROPERTY: North on Marion St. turn Left on Bascom Norris (100A) goto Oakland St. turn right to Hensley Glen turn Left 2nd home on Left.

BUILDING INFORMATION [X] RESIDENTIAL [ ] COMMERCIAL

Unit No	Type of Establishment	No. of Bedrooms	Building Area Sqft	Commercial/Institutional System Design Table 1, Chapter 64E-6, FAC
1	SFD	1	864	ORIGINAL ATTACHED
2				
3				
4				

[ ] Floor/Equipment Drains [ ] Other (Specify) _____

SIGNATURE: [signature] DATE: 2-12-12

DH 4015, 08/09 (Obsoletes previous editions which may not be used)
Incorporated 64E-6.001, FAC

NOTICE OF COMMENCEMENT

Tax Parcel Identification Number: 29967

Clerk's Office Stamp

Inst:201212003301 Date:3/1/2012 Time:10:48 AM
DC,P DeWitt Cason,Columbia County Page 1 of 1 B:1230 P:1901

THE UNDERSIGNED hereby gives notice that improvements will be made to certain real property, and in accordance with Section 713.13 of the Florida Statutes, the following information is provided in this **NOTICE OF COMMENCEMENT.**

1. Description of property *(legal description)*: 00-00-00-11634-000
   a) Street *(job)* Address: 134 NW Hensley Glen
2. General description of improvements: Build Home
3. Owner Information
   a) Name and address: Betty Murphy 134 NW Hensley Glen LC. 32056
   b) Name and address of fee simple titleholder (if other than owner) _____
   c) Interest in property _____
4. Contractor Information
   a) Name and address: James Johnston 650 SW Main Blvd. L.C. 32025
   b) Telephone No.: 386-365-5999 Fax No. (Opt.) _____
5. Surety Information
   a) Name and address: _____
   b) Amount of Bond: _____
   c) Telephone No.: _____ Fax No. (Opt.) _____
6. Lender
   a) Name and address: Columbia County CDBG
   b) Phone No. 758-1039
7. Identity of person within the State of Florida designated by owner upon whom notices or other documents may be served:
   a) Name and address: _____
   b) Telephone No.: _____ Fax No. (Opt.) _____
8. In addition to himself, owner designates the following person to receive a copy of the Lienor's Notice as provided in Section 713.13(l)(b), Florida Statutes:
   a) Name and address: _____
   b) Telephone No.: _____ Fax No. (Opt.) _____
9. Expiration date of Notice of Commencement **(the expiration date is one year from the date of recording unless a different date is specified)**: _____

WARNING TO OWNER: ANY PAYMENTS MADE BY THE OWNER AFTER THE EXPIRATION OF THE NOTICE OF COMMENCEMENT ARE CONSIDERED IMPROPER PAYMENTS UNDER CHAPTER 713, PART I, SECTION 713.13, FLORIDA STATUTES, AND CAN RESULT IN YOUR PAYING TWICE FOR IMPROVEMENTS TO YOUR PROPERTY; A NOTICE OF COMMENCEMENT MUST BE RECORDED AND POSTED ON THE JOB SITE BEFORE THE FIRST INSPECTION. IF YOU INTEND TO OBTAIN FINANCING, CONSULT YOUR LENDER OR AN ATTORNEY BEFORE COMMENCING WORK OR RECORDING YOUR NOTICE OF COMMENCEMENT.

STATE OF FLORIDA
COUNTY OF COLUMBIA

10. * Betty Murphy
Signature of Owner or Owner's Authorized Office/Director/Partner/Manager

Betty Murphy
Printed Name

The foregoing instrument was acknowledged before me, a Florida Notary, this 16th day of February, 20 12, by: Betty Murphy as Owner **(type of authority, e.g. officer, trustee, attorney fact) for** Self Betty Murphy **(name of party on behalf of whom instrument was executed).**

Personally Known ___ OR Produced Identification X Type State ID # M610092405230

Notary Signature Carey J Chandler Notary Stamp or Seal:

NOTARY PUBLIC STATE OF FLORIDA
CAREY F. CHANDLER
MY COMMISSION # DD 866347
EXPIRES: May 22, 2013
Bonded Thru Budget Notary Services

—AND—

11. Verification pursuant to Section 92.525, Florida Statutes. Under penalties of perjury, I declare that I have read the foregoing and that the facts stated in it are true to the best of my knowledge and belief.

* Betty Murphy
Signature of Natural Person Signing (in line #10 above.)

Notice of Treatment

Applicator: Florida Pest Control & Chemical Co. (www.flapest .com)
Address: 536 SE Baya Dr.
City Lake City Phone 752-1703

Site Location: Subdivision
Lot # Block# Permit # 29967
Address 134 NE Hensley Gln

Product used	Active Ingredient	% Concentration
☑ Premise	Imidacloprid	0.1%
☐ Termidor	Fipronil	0.12%
☐		

Type treatment: ☑ Soil

Area Treated	Square feet	Linear feet	Gallons Applied
Dwelling	864	118	70gals

As per Florida Building Code 104.2.6 – If soil chemical barrier method for termite prevention is used, final exterior treatment shall be completed prior to final building approval.

If this notice is for the final exterior treatment, initial this line _____.

3-6-12	1:12	F299
Date	Time	Print Technician's Name

Remarks:

Applicator - White Permit File - Canary Permit Holder - Pink

7/11 ©