NOTES

5) Provide mechanical connection (by others) of truss to bearing plate capable of withstanding 404 lb uplift at joint 2 and 404 lb uplift at joint 4.

LOAD CASE(S) Standard

Julius Lee
Truss Design Engineer
Florida FL No 34160
1 1/2 Crestal Bay Blvd
Lovilon Beach, FL 33435

December 4,2007

Warning - Verify design parameters and READ NOTES ON THIS AND INCLUDED MITEK REFERENCE PAGE MII-7473 BEFORE USE

This design is based only upon the parameters shown for an individual building component that is installed and loaded vertically and fabricated with MiTek connectors. Applicability of design parameters and proper incorporation of component into the overall building structure, including all temporary and permanent bracing, is the responsibility of building designer and / or contractor per ANSI / TPI 1 as referenced by the building code. For general guidance regarding storage, delivery, erection and bracing, consult BCSI-1 or HIB-91 Handling Installing and Bracing Recommendation available from the Wood Truss Council of America, 1 WTCA Center, 6300 Enterprise Lane, Madison, WI 53719 or the Truss Plate Institute, 583 D'Onofrio Drive, Madison, WI 53719

Builders FirstSource

Symbols

PLATE LOCATION AND ORIENTATION

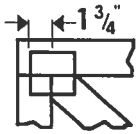

*Center plate on joint unless dimensions indicate otherwise. Dimensions are in inches. Apply plates to both sides of truss and securely seat.

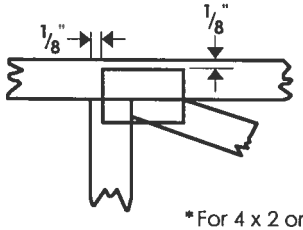

*For 4 x 2 orientation, locate plates 1/8" from outside edge of truss and vertical web.

*This symbol indicates the required direction of slots in connector plates.

PLATE SIZE

4 x 4

The first dimension is the width perpendicular to slots. Second dimension is the length parallel to slots.

LATERAL BRACING

Indicates location of required continuous lateral bracing.

BEARING

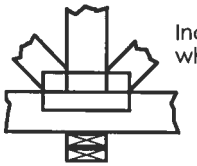

Indicates location of joints at which bearings (supports) occur.

Numbering System

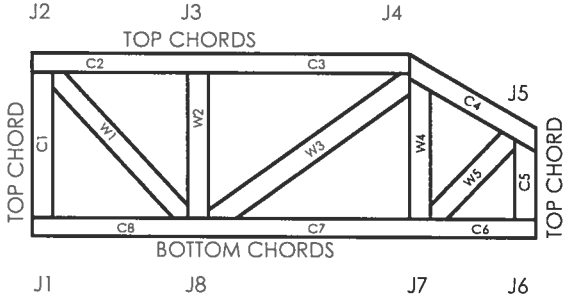

JOINTS AND CHORDS ARE NUMBERED CLOCKWISE AROUND THE TRUSS STARTING AT THE LOWEST JOINT FARTHEST TO THE LEFT.

WEBS ARE NUMBERED FROM LEFT TO RIGHT

CONNECTOR PLATE CODE APPROVALS

BOCA	96-31, 96-67
ICBO	3907, 4922
SBCCI	9667, 9432A
WISC/DILHR	960022-W, 970036-N
NER	561

MiTek Engineering Reference Sheet: MII-7473

General Safety Notes

Failure to Follow Could Cause Property Damage or Personal Injury

1. Provide copies of this truss design to the building designer, erection supervisor, property owner and all other interested parties.
2. Cut members to bear tightly against each other.
3. Place plates on each face of truss at each joint and embed fully. Avoid knots and wane at joint locations.
4. Unless otherwise noted, locate chord splices at ¼ panel length (± 6" from adjacent joint.)
5. Unless otherwise noted, moisture content of lumber shall not exceed 19% at time of fabrication.
6. Unless expressly noted, this design is not applicable for use with fire retardant or preservative treated lumber.
7. Camber is a non-structural consideration and is the responsibility of truss fabricator. General practice is to camber for dead load deflection.
8. Plate type, size and location dimensions shown indicate minimum plating requirements.
9. Lumber shall be of the species and size, and in all respects, equal to or better than the grade specified.
10. Top chords must be sheathed or purlins provided at spacing shown on design.
11. Bottom chords require lateral bracing at 10 ft. spacing, or less, if no ceiling is installed, unless otherwise noted.
12. Anchorage and / or load transferring connections to trusses are the responsibility of others unless shown.
13. Do not overload roof or floor trusses with stacks of construction materials.
14. Do not cut or alter truss member or plate without prior approval of a professional engineer.
15. Care should be exercised in handling, erection and installation of trusses.

© 1993 MiTek® Holdings, Inc.

ASCE 7-02: 130 MPH WIND SPEED, 15' MEAN HEIGHT, ENCLOSED, I = 1.00, EXPOSURE C

MAX GABLE VERTICAL LENGTH

2X4 GABLE VERTICAL SPACING	SPECIES	BRACE / GRADE	NO BRACES	(1) 1X4 "L" BRACE * GROUP A	(1) 1X4 "L" BRACE * GROUP B	(1) 2X4 "L" BRACE * GROUP A	(1) 2X4 "L" BRACE * GROUP B	(2) 2X4 "L" BRACE ** GROUP A	(2) 2X4 "L" BRACE ** GROUP B	(1) 2X6 "L" BRACE * GROUP A	(1) 2X6 "L" BRACE * GROUP B	(2) 2X6 "L" BRACE ** GROUP A	(2) 2X6 "L" BRACE ** GROUP B
24" O.C.	SPF HF	#1 / #2	3' 4"	6' 10"	6' 0"	6' 11"	7' 1"	8' 3"	8' 6"	10' 10"	11' 2"	12' 11"	13' 3"
		#3	3' 3"	4' 11"	4' 11"	6' 6"	6' 6"	8' 3"	8' 3"	10' 1"	10' 1"	12' 11"	12' 11"
		STUD	3' 3"	4' 11"	4' 11"	6' 5"	6' 5"	8' 3"	8' 3"	10' 0"	10' 0"	12' 11"	12' 11"
		STANDARD	3' 3"	4' 2"	4' 2"	5' 6"	5' 6"	7' 5"	7' 5"	8' 8"	8' 8"	11' 8"	11' 8"
	SP DFL	#1	3' 8"	5' 10"	6' 3"	6' 11"	7' 5"	8' 3"	8' 11"	10' 10"	11' 8"	12' 11"	13' 11"
		#2	3' 7"	5' 10"	6' 3"	6' 11"	7' 5"	8' 3"	8' 11"	10' 10"	11' 8"	12' 11"	13' 11"
		#3	3' 6"	5' 0"	5' 0"	6' 8"	6' 8"	8' 3"	8' 8"	10' 4"	10' 4"	12' 11"	13' 7"
		STUD	3' 6"	5' 0"	5' 0"	6' 7"	6' 7"	8' 3"	8' 8"	10' 3"	10' 3"	12' 11"	13' 7"
		STANDARD	3' 4"	4' 3"	4' 3"	5' 8"	5' 8"	7' 8"	7' 8"	8' 10"	8' 10"	12' 0"	12' 0"
16" O.C.	SPF HF	#1 / #2	3' 10"	6' 8"	6' 10"	7' 11"	8' 1"	9' 6"	9' 8"	12' 6"	12' 9"	14' 0"	14' 0"
		#3	3' 9"	6' 0"	6' 0"	7' 11"	7' 11"	9' 5"	9' 5"	12' 4"	12' 4"	14' 0"	14' 0"
		STUD	3' 9"	6' 0"	6' 0"	7' 11"	7' 11"	9' 5"	9' 5"	12' 4"	12' 4"	14' 0"	14' 0"
		STANDARD	3' 9"	5' 2"	5' 2"	6' 10"	6' 10"	9' 2"	9' 2"	10' 7"	10' 7"	14' 0"	14' 0"
	SP DFL	#1	4' 3"	6' 8"	7' 2"	7' 11"	8' 6"	9' 5"	10' 2"	12' 5"	13' 5"	14' 0"	14' 0"
		#2	4' 2"	6' 8"	7' 2"	7' 11"	8' 6"	9' 5"	10' 2"	12' 5"	13' 5"	14' 0"	14' 0"
		#3	4' 0"	6' 2"	6' 2"	7' 11"	8' 2"	9' 5"	9' 11"	12' 5"	12' 8"	14' 0"	14' 0"
		STUD	4' 0"	6' 1"	6' 1"	7' 11"	8' 1"	9' 5"	9' 11"	12' 5"	12' 5"	14' 0"	14' 0"
		STANDARD	3' 10"	5' 3"	5' 3"	6' 11"	6' 11"	9' 4"	9' 4"	10' 10"	10' 10"	14' 0"	14' 0"
12" O.C.	SPF HF	#1 / #2	4' 3"	7' 4"	7' 7"	8' 9"	8' 11"	10' 6"	10' 8"	13' 8"	14' 0"	14' 0"	14' 0"
		#3	4' 2"	6' 11"	6' 11"	8' 9"	8' 9"	10' 5"	10' 5"	13' 8"	13' 8"	14' 0"	14' 0"
		STUD	4' 2"	6' 11"	6' 11"	8' 9"	8' 9"	10' 5"	10' 5"	13' 8"	13' 8"	14' 0"	14' 0"
		STANDARD	4' 2"	5' 11"	5' 11"	7' 10"	7' 10"	10' 5"	10' 5"	12' 3"	12' 3"	14' 0"	14' 0"
	SP DFL	#1	4' 8"	7' 4"	7' 11"	8' 9"	9' 5"	10' 5"	11' 2"	13' 8"	14' 0"	14' 0"	14' 0"
		#2	4' 7"	7' 4"	7' 11"	8' 9"	9' 5"	10' 5"	11' 2"	13' 8"	14' 0"	14' 0"	14' 0"
		#3	4' 4"	7' 2"	7' 2"	8' 9"	9' 2"	10' 5"	10' 11"	13' 8"	14' 0"	14' 0"	14' 0"
		STUD	4' 4"	7' 1"	7' 1"	8' 9"	9' 2"	10' 5"	10' 11"	13' 8"	14' 0"	14' 0"	14' 0"
		STANDARD	4' 3"	6' 1"	6' 1"	8' 0"	8' 0"	10' 5"	10' 8"	12' 8"	12' 8"	14' 0"	14' 0"

BRACING GROUP SPECIES AND GRADES:

GROUP A:

SPRUCE-PINE-FIR: #1 / #2 STANDARD; #3 STUD

HEM-FIR: #2 STUD; #3 STANDARD

DOUGLAS FIR-LARCH: #3; STUD; STANDARD

SOUTHERN PINE: #3; STUD; STANDARD

GROUP B:

HEM-FIR: #1 & BTR; #1

SOUTHERN PINE: #3; #2

DOUGLAS FIR-LARCH: #1; #2

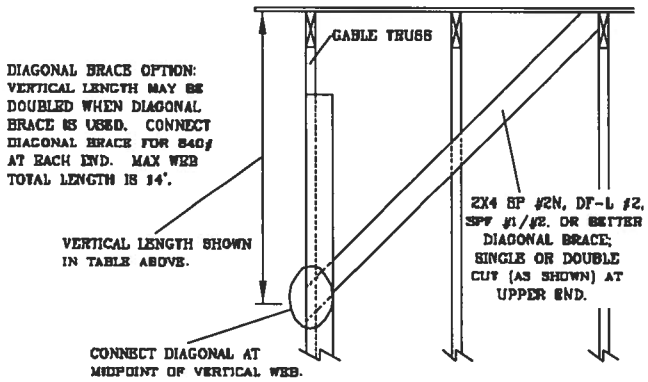

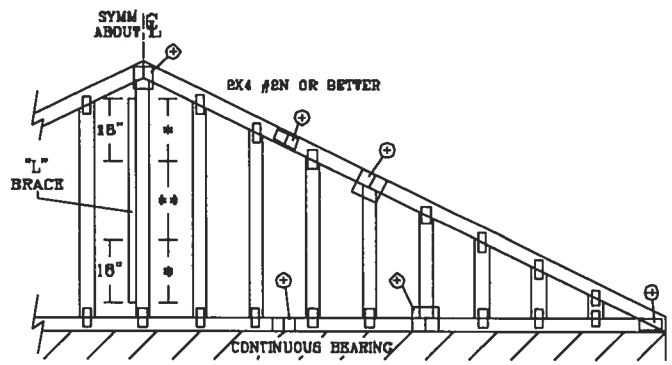

REFER TO CHART ABOVE FOR MAX GABLE VERTICAL LENGTH.

GABLE TRUSS DETAIL NOTES:

LIVE LOAD DEFLECTION CRITERIA IS L/240.

PROVIDE UPLIFT CONNECTIONS FOR 136 PLF OVER CONTINUOUS BEARING (5 PSF TC DEAD LOAD).

GABLE END SUPPORTS LOAD FROM 4' 0" OUTLOOKERS WITH 2' 0" OVERHANG, OR 12" PLYWOOD OVERHANG.

ATTACH EACH "L" BRACE WITH 10d NAILS.
* FOR (1) "L" BRACE: SPACE NAILS AT 2" O.C. IN 18" END ZONES AND 4" O.C. BETWEEN ZONES.
** FOR (2) "L" BRACES: SPACE NAILS AT 3" O.C. IN 18" END ZONES AND 6" O.C. BETWEEN ZONES.

"L" BRACING MUST BE A MINIMUM OF 80% OF WEB MEMBER LENGTH.

GABLE VERTICAL PLATE SIZES

VERTICAL LENGTH	NO SPLICE
LESS THAN 4' 0"	1X4 OR 2X3
GREATER THAN 4' 0", BUT LESS THAN 11' 8"	2X4
GREATER THAN 11' 8"	2.5X4

+ REFER TO COMMON TRUSS DESIGN FOR PEAK, SPLICE, AND HEEL PLATES.

WARNING TRUSSES REQUIRE EXTREME CARE IN FABRICATING, HANDLING, SHIPPING, INSTALLING AND BRACING. REFER TO BCSI 1-03 (BUILDING COMPONENT SAFETY INFORMATION, PUBLISHED BY TPI) (TRUSS PLATE INSTITUTE, 583 D'ONOFRIO DR, SUITE 200, MADISON, WI. 53719) AND WTCA (WOOD TRUSS COUNCIL OF AMERICA, 6300 ENTERPRISE LN, MADISON, WI 53719) FOR SAFETY PRACTICES PRIOR TO PERFORMING THESE FUNCTIONS. UNLESS OTHERWISE INDICATED, TOP CHORD SHALL HAVE PROPERLY ATTACHED STRUCTURAL PANELS AND BOTTOM CHORD SHALL HAVE A PROPERLY ATTACHED RIGID CEILING.

JULIUS LEE'S
CONS. ENGINEERS P.A.
1455 SW 4th AVENUE
DELRAY BEACH, FL 33444-2161

No: 34669
STATE OF FLORIDA

MAX. TOT. LD. 60 PSF

MAX. SPACING 24.0"

REF ASCE7-02-GAB13015
DATE 11/26/03
DRWG MITEK STD GABLE 16 E HT
-ENG

ASCE 7-02: 130 MPH WIND SPEED, 30' MEAN HEIGHT, ENCLOSED, I = 1.00, EXPOSURE C

MAX GABLE VERTICAL LENGTH

2X4 GABLE VERTICAL SPACING	SPECIES	BRACE / GRADE	NO BRACES	(1) 1X4 "L" BRACE * GROUP A	(1) 1X4 "L" BRACE * GROUP B	(1) 2X4 "L" BRACE * GROUP A	(1) 2X4 "L" BRACE * GROUP B	(2) 2X4 "L" BRACE ** GROUP A	(2) 2X4 "L" BRACE ** GROUP B	(1) 2X6 "L" BRACE * GROUP A	(1) 2X6 "L" BRACE * GROUP B	(2) 2X6 "L" BRACE ** GROUP A	(2) 2X6 "L" BRACE ** GROUP B
24" O.C.	SPF HF	#1 / #2	3' 2"	5' 6"	6' 8"	6' 6"	6' 9"	7' 10"	8' 0"	10' 3"	10' 7"	12' 3"	12' 7"
		#3	3' 1"	4' 5"	4' 5"	5' 10"	5' 10"	7' 10"	7' 10"	9' 1"	9' 1"	12' 3"	12' 3"
		STUD	3' 1"	4' 6"	4' 5"	5' 10"	5' 10"	7' 10"	7' 10"	9' 1"	9' 1"	12' 3"	12' 3"
		STANDARD	2' 11"	3' 9"	3' 9"	5' 0"	5' 0"	6' 9"	6' 9"	7' 10"	7' 10"	10' 7"	10' 7"
	SP DFL	#1	3' 8"	5' 6"	5' 11"	6' 8"	7' 0"	7' 10"	8' 5"	10' 3"	11' 1"	12' 3"	13' 2"
		#2	3' 6"	5' 6"	5' 11"	6' 6"	7' 0"	7' 10"	8' 5"	10' 3"	11' 1"	12' 3"	13' 2"
		#3	3' 3"	4' 6"	4' 6"	6' 0"	6' 0"	7' 10"	8' 1"	9' 4"	9' 4"	12' 3"	12' 8"
		STUD	3' 3"	4' 6"	4' 6"	5' 11"	5' 11"	7' 10"	8' 0"	9' 3"	9' 3"	12' 3"	12' 6"
		STANDARD	3' 0"	3' 10"	3' 10"	5' 1"	5' 1"	6' 11"	6' 11"	8' 0"	8' 0"	10' 10"	10' 10"
16" O.C.	SPF HF	#1 / #2	3' 8"	6' 4"	6' 6"	7' 6"	7' 8"	8' 11"	9' 2"	11' 9"	12' 1"	14' 0"	14' 0"
		#3	3' 7"	5' 5"	5' 5"	7' 2"	7' 2"	8' 11"	8' 11"	11' 2"	11' 2"	14' 0"	14' 0"
		STUD	3' 7"	5' 6"	6' 5"	7' 2"	7' 2"	8' 11"	8' 11"	11' 1"	11' 1"	14' 0"	14' 0"
		STANDARD	3' 7"	4' 8"	4' 8"	6' 2"	6' 2"	8' 3"	8' 3"	9' 7"	9' 7"	12' 11"	12' 11"
	SP DFL	#1	4' 0"	6' 4"	6' 10"	7' 6"	8' 1"	8' 11"	9' 7"	11' 9"	12' 8"	14' 0"	14' 0"
		#2	3' 11"	6' 4"	6' 10"	7' 6"	8' 1"	8' 11"	9' 7"	11' 9"	12' 8"	14' 0"	14' 0"
		#3	3' 9"	5' 7"	6' 7"	7' 4"	7' 4"	8' 11"	9' 6"	11' 5"	11' 6"	14' 0"	14' 0"
		STUD	3' 8"	5' 6"	5' 6"	7' 3"	7' 3"	8' 11"	9' 5"	11' 4"	11' 4"	14' 0"	14' 0"
		STANDARD	3' 8"	4' 9"	4' 9"	6' 3"	6' 3"	8' 5"	8' 5"	9' 9"	9' 9"	13' 3"	13' 3"
12" O.C.	SPF HF	#1 / #2	4' 0"	6' 11"	7' 2"	8' 3"	8' 6"	9' 10"	10' 1"	12' 11"	13' 4"	14' 0"	14' 0"
		#3	3' 11"	6' 3"	6' 3"	8' 3"	8' 3"	9' 10"	9' 10"	12' 11"	12' 11"	14' 0"	14' 0"
		STUD	3' 11"	6' 3"	6' 3"	8' 3"	8' 3"	9' 10"	9' 10"	12' 10"	12' 10"	14' 0"	14' 0"
		STANDARD	3' 11"	5' 4"	5' 4"	7' 1"	7' 1"	9' 6"	9' 6"	11' 1"	11' 1"	14' 0"	14' 0"
	SP DFL	#1	4' 5"	6' 11"	7' 6"	8' 3"	8' 11"	9' 10"	10' 7"	12' 11"	13' 11"	14' 0"	14' 0"
		#2	4' 4"	6' 11"	7' 6"	8' 3"	8' 11"	9' 10"	10' 7"	12' 11"	13' 11"	14' 0"	14' 0"
		#3	4' 2"	6' 6"	6' 5"	8' 3"	8' 6"	9' 10"	10' 4"	12' 11"	13' 3"	14' 0"	14' 0"
		STUD	4' 2"	6' 4"	6' 4"	8' 3"	8' 6"	9' 10"	10' 4"	12' 11"	13' 1"	14' 0"	14' 0"
		STANDARD	4' 0"	5' 6"	5' 6"	7' 3"	7' 3"	9' 9"	9' 9"	11' 4"	11' 4"	14' 0"	14' 0"

BRACING GROUP SPECIES AND GRADES:

GROUP A:

SPRUCE-PINE-FIR: #1 / #2 STANDARD; #3 STUD

HEM-FIR: #2 STUD; #3 STANDARD

DOUGLAS FIR-LARCH: #3; STUD; STANDARD

SOUTHERN PINE: #3; STUD; STANDARD

GROUP B:

HEM-FIR: #1 & BTR; #1

SOUTHERN PINE: #1; #2

DOUGLAS FIR-LARCH: #1; #2

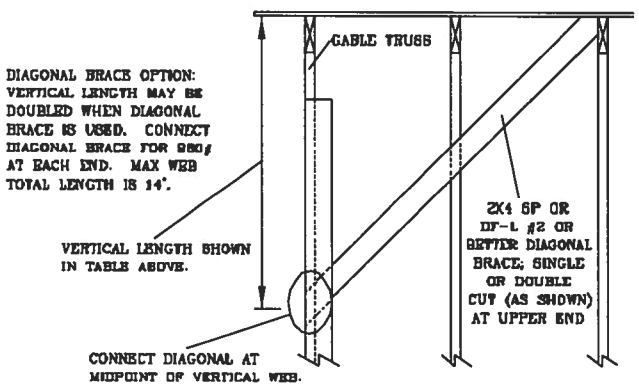

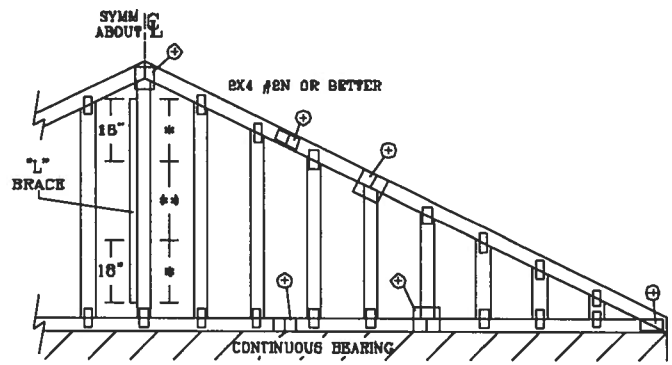

REFER TO CHART ABOVE FOR MAX GABLE VERTICAL LENGTH.

GABLE TRUSS DETAIL NOTES:

LIVE LOAD DEFLECTION CRITERIA IS L/240.

PROVIDE UPLIFT CONNECTIONS FOR 180 PLF OVER CONTINUOUS BEARING (6 PSF TC DEAD LOAD).

GABLE END SUPPORTS LOAD FROM 4' 0" OUTLOOKERS WITH 2' 0" OVERHANG, OR 12" PLYWOOD OVERHANG.

ATTACH EACH "L" BRACE WITH 10d NAILS.
* FOR (1) "L" BRACE: SPACE NAILS AT 2" O.C. IN 18" END ZONES AND 4" O.C. BETWEEN ZONES.
** FOR (2) "L" BRACES: SPACE NAILS AT 3" O.C. IN 18" END ZONES AND 6" O.C. BETWEEN ZONES.

"L" BRACING MUST BE A MINIMUM OF 80% OF WEB MEMBER LENGTH.

GABLE VERTICAL PLATE SIZES

VERTICAL LENGTH	NO SPLICE
LESS THAN 4' 0"	1X4 OR 2X3
GREATER THAN 4' 0", BUT LESS THAN 11' 6"	2X4
GREATER THAN 11' 6"	2.5X4

+ REFER TO COMMON TRUSS DESIGN FOR PEAK, SPLICE, AND HEEL PLATES.

WARNING TRUSSES REQUIRE EXTREME CARE IN FABRICATING, HANDLING, SHIPPING, INSTALLING AND BRACING. REFER TO BCSI 1-03 (BUILDING COMPONENT SAFETY INFORMATION), PUBLISHED BY TPI (TRUSS PLATE INSTITUTE, 583 D'ONOFRIO DR., SUITE 200, MADISON, WI. 53719) AND WTCA (WOOD TRUSS COUNCIL OF AMERICA, 6300 ENTERPRISE LN, MADISON, WI 53719) FOR SAFETY PRACTICES PRIOR TO PERFORMING THESE FUNCTIONS. UNLESS OTHERWISE INDICATED, TOP CHORD SHALL HAVE PROPERLY ATTACHED STRUCTURAL PANELS AND BOTTOM CHORD SHALL HAVE A PROPERLY ATTACHED RIGID CEILING.

JULIUS LEE'S
CONS. ENGINEERS P.A.
1466 SW 4th AVENUE
DELRAY BEACH, FL 33444-2161

No: 34669
STATE OF FLORIDA

MAX. TOT. LD. 60 PSF

MAX. SPACING 24.0"

REF ASCE7-02-GAB13030

DATE 11/26/03

DWG MITEK STD GABLE 30' E H7

-ENG

TYPICAL ATTIC TRUSS BRACING

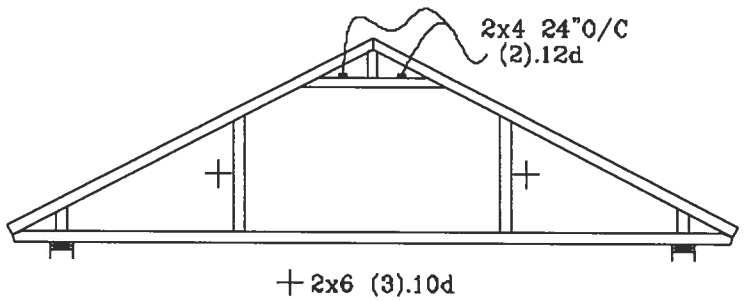

GABLE END TRUSS DETAIL

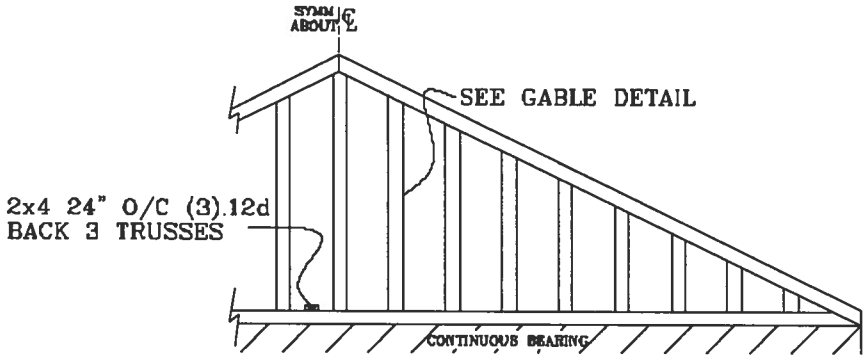

MINIMUM BC BRACING ON GABLE TRUSS. OTHER PERMANENT BRACING DESIGNS BY ARCHITECT OR EOR

TYPICAL ALTERNATE BRACING DETAIL FOR EXTERIOR FLAT GIRDER TRUSS

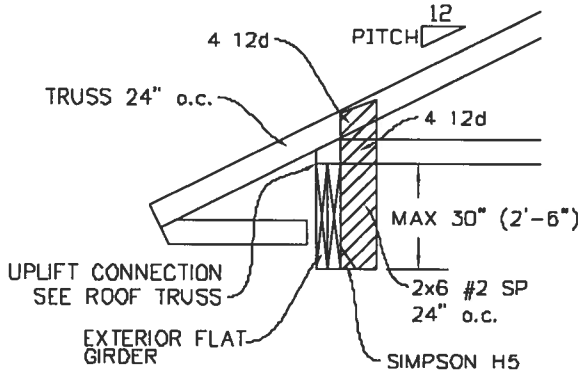

TYPICAL WALL GIRDER VERTICAL WEB BRACING DETAIL

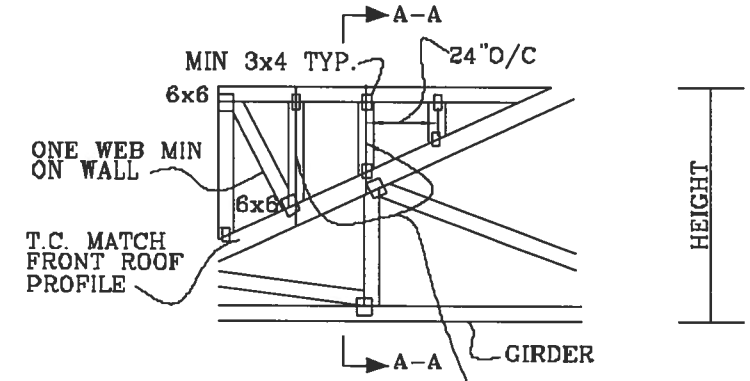

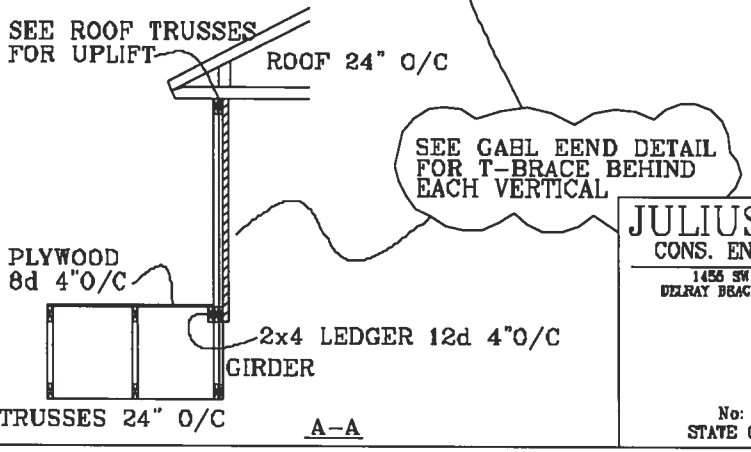

JULIUS LEE'S
CONS. ENGINEERS P.A.
1456 SW 4th AVENUE
DELRAY BEACH, FL 33444-2161

No: 34869
STATE OF FLORIDA

PIGGYBACK DETAIL

TOP CHORD 2X4 #2 OR BETTER
BOT CHORD 2X4 #2 OR BETTER
WEBS 2X4 #3 OR BETTER

REFER TO SEALED DESIGN FOR DASHED PLATES.

SPACE PIGGYBACK VERTICALS AT 4' OC MAX.

TOP AND BOTTOM CHORD SPLICES MUST BE STAGGERED SO THAT ONE SPLICE IS NOT DIRECTLY OVER ANOTHER.

PIGGYBACK BOTTOM CHORD MAY BE OMITTED. ATTACH VERTICAL WEBS TO TRUSS TOP CHORD WITH 1.5X3 PLATE.

ATTACH PURLINS TO TOP OF FLAT TOP CHORD. IF PIGGYBACK IS SOLID LUMBER OR THE BOTTOM CHORD IS OMITTED, PURLINS MAY BE APPLIED BENEATH THE TOP CHORD OF SUPPORTING TRUSS.

REFER TO ENGINEER'S SEALED DESIGN FOR REQUIRED PURLIN SPACING.

THIS DETAIL IS APPLICABLE FOR THE FOLLOWING WIND CONDITIONS:

110 MPH WIND, 30' MEAN HGT, ASCE 7-02, CLOSED BLDG, LOCATED ANYWHERE IN ROOF, 1 MI FROM COAST CAT I, EXP C, WIND TC DL=5 PSF, WIND BC DL=5 PSF

110 MPH WIND, 30' MEAN HGT, FBC ENCLOSED BLDG, LOCATED ANYWHERE IN ROOF WIND TC DL=5 PSF, WIND BC DL=5 PSF

130 MPH WIND, 30' MEAN HGT, ASCE 7-02, CLOSED BLDG, LOCATED ANYWHERE IN ROOF, CAT II, EXP. C, WIND TC DL=6 PSF, WIND BC DL=6 PSF

FRONT FACE (E,*) PLATES MAY BE OFFSET FROM BACK FACE PLATES AS LONG AS BOTH FACES ARE SPACED 4' OC MAX.

JOINT TYPE	SPANS UP TO			
	30'	34'	38'	52'
A	2X4	2.5X4	2.5X4	3X5
B	4X6	5X6	5X6	5X6
C	1.5X3	1.5X4	1.5X4	1.5X4
D	5X4	5X5	5X5	5X6
E	4X8 OR 3X6 TRULOX AT 4' OC, ROTATED VERTICALLY			

ATTACH TRULOX PLATES WITH (8) 0.120" X 1.375" NAILS, OR EQUAL, PER FACE PER PLY. (4) NAILS IN EACH MEMBER TO BE CONNECTED. REFER TO DRAWING 160 TL FOR TRULOX INFORMATION.

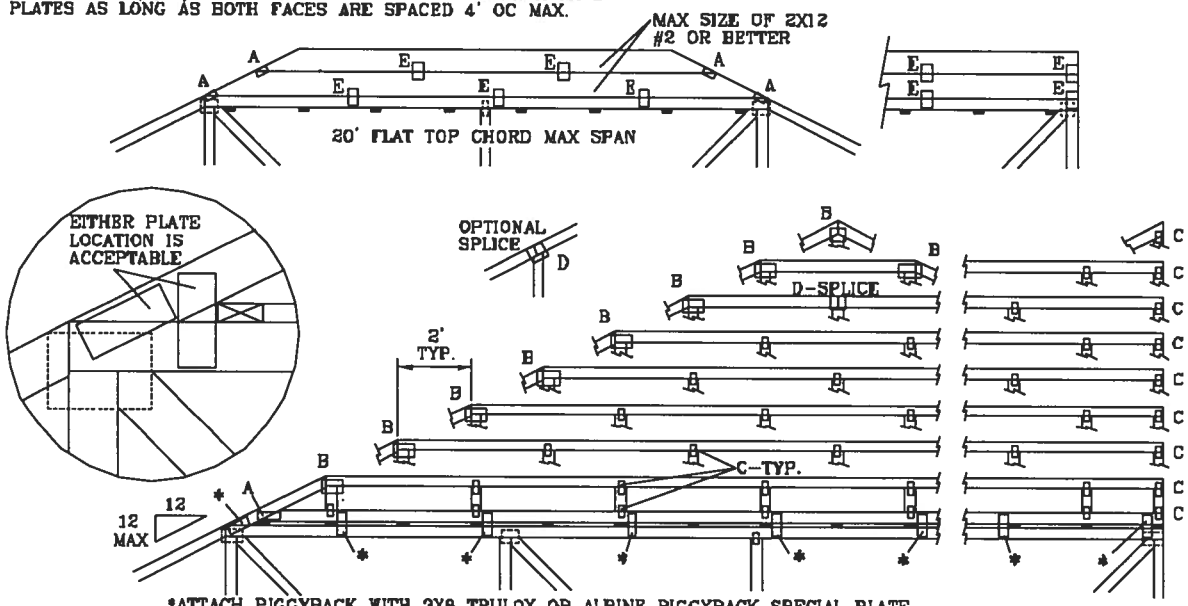

*ATTACH PIGGYBACK WITH 3X8 TRULOX OR ALPINE PIGGYBACK SPECIAL PLATE.

WEB BRACING CHART	
WEB LENGTH	REQUIRED BRACING
0' TO 7'9"	NO BRACING
7'9" TO 10'	1x4 "T" BRACE. SAME GRADE, SPECIES AS WEB MEMBER, OR BETTER, AND 80% LENGTH OF WEB MEMBER. ATTACH WITH 8d NAILS AT 4" OC.
10' TO 14'	2x4 "T" BRACE. SAME GRADE, SPECIES AS WEB MEMBER, OR BETTER, AND 80% LENGTH OF WEB MEMBER. ATTACH WITH 16d NAILS AT 4" OC.

* PIGGYBACK SPECIAL PLATE

ATTACH TEETH TO THE PIGGYBACK AT THE TIME OF FABRICATION. ATTACH TO SUPPORTING TRUSS WITH (4) 0.120" X 1.375" NAILS PER FACE PER PLY. APPLY PIGGYBACK SPECIAL PLATE TO EACH TRUSS FACE AND SPACE 4' OC OR LESS.

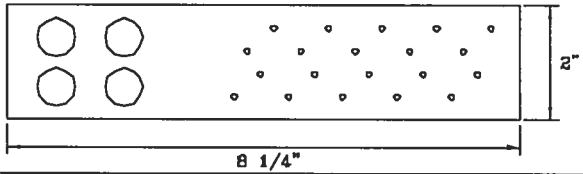

THIS DRAWING REPLACES DRAWINGS 634,016 634,017 & 647,045

WARNING TRUSSES REQUIRE EXTREME CARE IN FABRICATING, HANDLING, SHIPPING, INSTALLING AND BRACING. REFER TO BCSI 1-03 (BUILDING COMPONENT SAFETY INFORMATION), PUBLISHED BY TPI (TRUSS PLATE INSTITUTE, 583 D'ONOFRIO DR., SUITE 200, MADISON, WI. 53719) AND WTCA (WOOD TRUSS COUNCIL OF AMERICA, 6300 ENTERPRISE LN, MADISON, WI 53719) FOR SAFETY PRACTICES PRIOR TO PERFORMING THESE FUNCTIONS. UNLESS OTHERWISE INDICATED, TOP CHORD SHALL HAVE PROPERLY ATTACHED STRUCTURAL PANELS AND BOTTOM CHORD SHALL HAVE A PROPERLY ATTACHED RIGID CEILING.

JULIUS LEE'S
CONS. ENGINEERS P.A.
1460 SW 4th AVENUE
DELRAY BEACH, FL. 33444-2161
No: 34869
STATE OF FLORIDA

MAX LOADING
55 PSF AT 1.33 DUR. FAC.
50 PSF AT 1.25 DUR. FAC.
47 PSF AT 1.15 DUR. FAC.
SPACING 24.0"

REF PIGGYBACK
DATE 09/12/07
DRWG MITEK STD PIGGY
-ENG JL

VALLEY TRUSS DETAIL

TOP CHORD 2X4 SP #2 OR SPF #1/#2 OR BETTER.
BOT CHORD 2X3(*) OR 2X4 SP #2N OR SPF #1/#2 OR BETTER.
WEBS 2X4 SP #3 OR BETTER.

* 2X3 MAY BE RIPPED FROM A 2X6 (PITCHED OR SQUARE).

** ATTACH EACH VALLEY TO EVERY SUPPORTING TRUSS WITH: (2) 16d BOX (0.135" X 3.5") NAILS TOE-NAILED FOR FBC 2004 110 MPH, ASCE 7-02 110 MPH WIND OR (3) 16d FOR ASCE 7-02 130 MPH WIND. 15' MEAN HEIGHT, ENCLOSED BUILDING, EXP. C, RESIDENTIAL, WIND TC DL=5 PSF.

UNLESS SPECIFIED ON ENGINEER'S SEALED DESIGN, APPLY 1X4 "T"-BRACE, 80% LENGTH OF WEB, VALLEY WEB, SAME SPECIES AND GRADE OR BETTER, ATTACHED WITH 8d BOX (0.113" X 2.5") NAILS AT 6" OC, OR CONTINUOUS LATERAL BRACING, EQUALLY SPACED, FOR VERTICAL VALLEY WEBS GREATER THAN 7'9".

MAXIMUM VALLEY VERTICAL HEIGHT MAY NOT EXCEED 12'0".

TOP CHORD OF TRUSS BENEATH VALLEY SET MUST BE BRACED WITH:
PROPERLY ATTACHED, RATED SHEATHING APPLIED PRIOR TO VALLEY TRUSS INSTALLATION
OR
PURLINS AT 24" OC OR AS OTHERWISE SPECIFIED ON ENGINEERS' SEALED DESIGN
OR
BY VALLEY TRUSSES USED IN LIEU OF PURLIN SPACING AS SPECIFIED ON ENGINEERS' SEALED DESIGN.

*** NOTE THAT THE PURLIN SPACING FOR BRACING THE TOP CHORD OF THE TRUSS BENEATH THE VALLEY IS MEASURED ALONG THE SLOPE OF THE TOP CHORD.

++ LARGER SPANS MAY BE BUILT AS LONG AS THE VERTICAL HEIGHT DOES NOT EXCEED 12'0".

BOTTOM CHORD MAY BE SQUARE OR PITCHED CUT AS SHOWN.

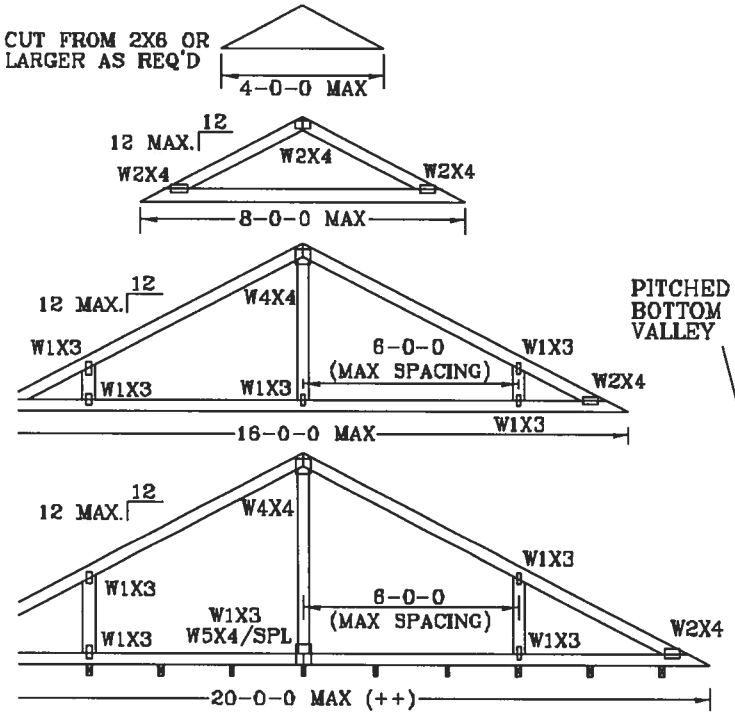

SUPPORTING TRUSSES AT 24" OC MAXIMUM SPACING.

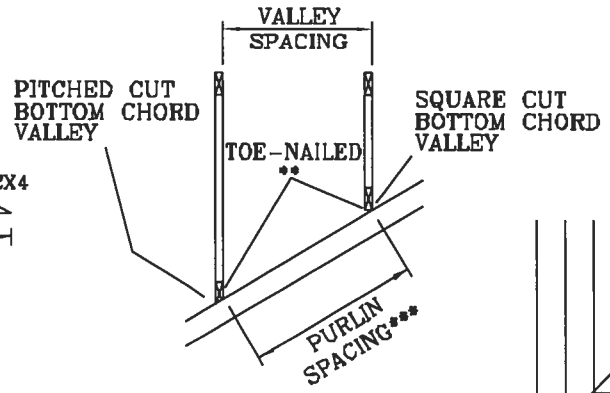

OPTIONAL STUB END DETAIL

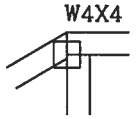

OPTIONAL HIP JOINT DETAIL

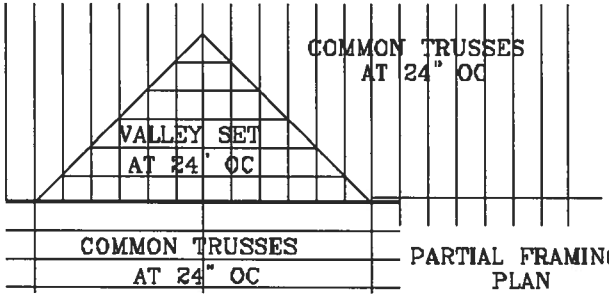

PARTIAL FRAMING PLAN

THIS DRAWING REPLACES DRAWING A105

WARNING TRUSSES REQUIRE EXTREME CARE IN FABRICATING, HANDLING, SHIPPING, INSTALLING AND BRACING. REFER TO BCSI 1-03 (BUILDING COMPONENT SAFETY INFORMATION), PUBLISHED BY TPI (TRUSS PLATE INSTITUTE, 583 D'ONOFRIO DR., SUITE 200, MADISON, WI 53719) AND WTCA (WOOD TRUSS COUNCIL OF AMERICA, 6300 ENTERPRISE LN, MADISON, WI 53719) FOR SAFETY PRACTICES PRIOR TO PERFORMING THESE FUNCTIONS. UNLESS OTHERWISE INDICATED, TOP CHORD SHALL HAVE PROPERLY ATTACHED STRUCTURAL PANELS AND BOTTOM CHORD SHALL HAVE A PROPERLY ATTACHED RIGID CEILING.

JULIUS LEE'S
CONS. ENGINEERS P.A.
1455 SW 4th AVENUE
DELRAY BEACH, FL 33444-2161

No: 34869
STATE OF FLORIDA

TC LL	20	20	PSF	
TC DL	7	15	PSF	
BC DL	5	5	PSF	
BC LL	0	0	PSF	
TOT. LD.	32	40	PSF	
DUR.FAC.	1.25	1.25		
SPACING		24"		

REF	VALLEY DETAIL
DATE	11/26/03
DRWG	VALTRUSS1103
-ENG	JL

TOE-NAIL DETAIL

TOE-NAILS TO BE DRIVEN AT AN ANGLE OF APPROXIMATELY THIRTY DEGREES WITH THE PIECE AND STARTED APPROXIMATELY ONE-THIRD THE LENGTH OF THE NAIL FROM THE END OF THE MEMBER.

PER ANSI/AF&PA NDS-2001 SECTION 12.4.1 - EDGE DISTANCE, END DISTANCE, SPACING: "EDGE DISTANCES, END DISTANCES AND SPACINGS FOR NAILS AND SPIKES SHALL BE SUFFICIENT TO PREVENT SPLITTING OF THE WOOD."

THE NUMBER OF TOE-NAILS TO BE USED IN A SPECIFIC APPLICATION IS DEPENDENT UPON PROPERTIES FOR THE CHORD SIZE, LUMBER SPECIES, AND NAIL TYPE. PROPER CONSTRUCTION PRACTICES AS WELL AS GOOD JUDGEMENT SHOULD DETERMINE THE NUMBER OF NAILS TO BE USED.

THIS DETAIL DISPLAYS A TOE-NAILED CONNECTION FOR JACK FRAMING INTO A SINGLE OR DOUBLE PLY SUPPORTING GIRDER.

MAXIMUM VERTICAL RESISTANCE OF 16d (0.162"X3.5") COMMON TOE-NAILS

NUMBER OF TOE-NAILS	SOUTHERN PINE		DOUGLAS FIR-LARCH		HEM-FIR		SPRUCE PINE FIR	
	1 PLY	2 PLIES	1 PLY	2 PLIES	1 PLY	2 PLIES	1 PLY	2 PLIES
2	197#	256#	181#	234#	156#	203#	154#	199#
3	296#	383#	271#	351#	234#	304#	230#	298#
4	394#	511#	361#	468#	312#	406#	307#	397#
5	493#	639#	452#	585#	390#	507#	384#	496#

ALL VALUES MAY BE MULTIPLIED BY APPROPRIATE DURATION OF LOAD FACTOR.

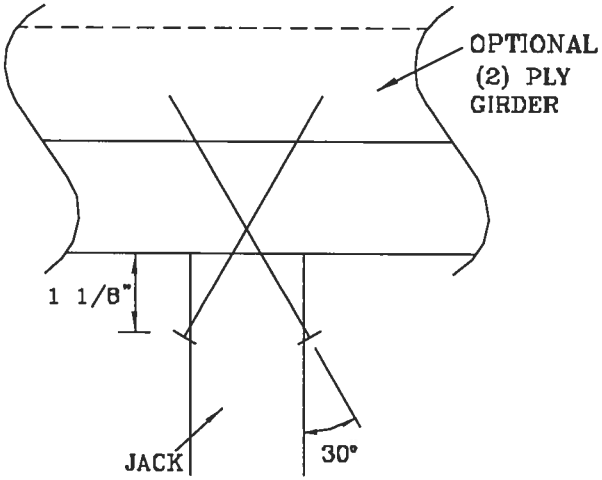

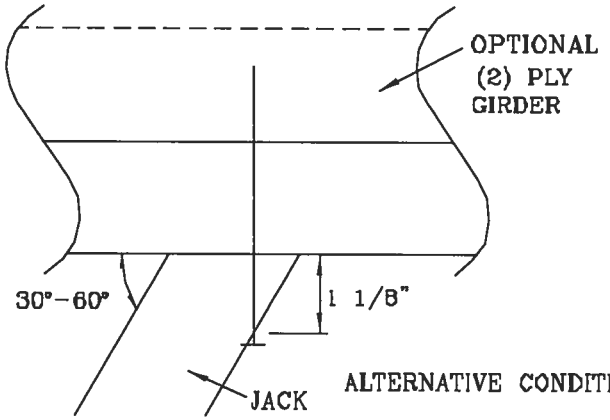

ALTERNATIVE CONDITION

THIS DRAWING REPLACES DRAWING 784040

WARNING TRUSSES REQUIRE EXTREME CARE IN FABRICATING, HANDLING, SHIPPING, INSTALLING AND BRACING. REFER TO BCSI 1-03 (BUILDING COMPONENT SAFETY INFORMATION), PUBLISHED BY TPI (TRUSS PLATE INSTITUTE, 583 D'ONOFRIO DR., SUITE 200, MADISON, WI. 53719) AND WTCA (WOOD TRUSS COUNCIL OF AMERICA, 6300 ENTERPRISE LN, MADISON, WI 53719) FOR SAFETY PRACTICES PRIOR TO PERFORMING THESE FUNCTIONS. UNLESS OTHERWISE INDICATED, TOP CHORD SHALL HAVE PROPERLY ATTACHED STRUCTURAL PANELS AND BOTTOM CHORD SHALL HAVE A PROPERLY ATTACHED RIGID CEILING.

JULIUS LEE'S
CONS. ENGINEERS P.A.
1455 SW 4th AVENUE
DELRAY BEACH, FL 33444-2161

No: 34869
STATE OF FLORIDA

TC LL	PSF	REF TOE-NAIL
TC DL	PSF	DATE 09/12/07
BC DL	PSF	DRWG CNTONAIL1103
BC LL	PSF	-ENG JL
TOT. LD.	PSF	
DUR. FAC.	1.00	
SPACING		

1/2" DIAMETER BOLT SPACING FOR LOAD APPLIED PARALLEL TO GRAIN.

* GRADE AND SPECIES AS SPECIFIED ON THE ALPINE DESIGN.

BOLT HOLES SHALL BE A MINIMUM OF 1/32" TO A MAXIMUM OF 1/16" LARGER THAN BOLT DIAMETER.

TYPICAL LOCATION OF 1/2" DIAMETER THRU BOLTS. BOLT QUANTITIES AS NOTED ON SEALED DESIGN MUST BE APPLIED IN ONE OF THE PATTERNS SHOWN BELOW.

WASHERS REQUIRED UNDER BOLT HEAD AND NUT

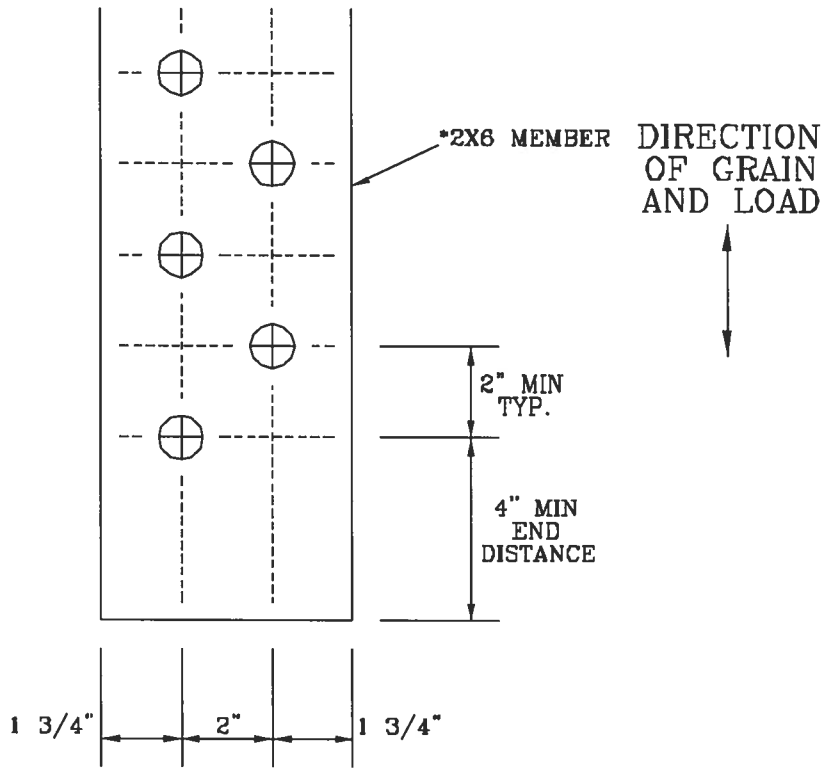

2X6 DETAIL

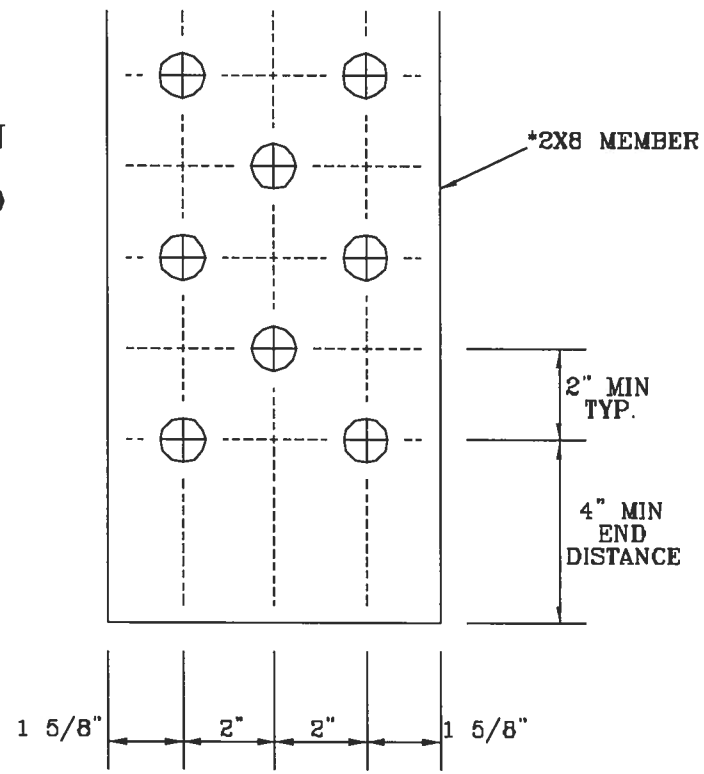

2X8 DETAIL

THIS DRAWING REPLACES DRAWING A628.016

WARNING TRUSSES REQUIRE EXTREME CARE IN FABRICATING, HANDLING, SHIPPING, INSTALLING AND BRACING. REFER TO BCSI 1-03 (BUILDING COMPONENT SAFETY INFORMATION), PUBLISHED BY TPI (TRUSS PLATE INSTITUTE, 583 D'ONOFRIO DR., SUITE 200, MADISON, WI. 53719) AND WTCA (WOOD TRUSS COUNCIL OF AMERICA, 6300 ENTERPRISE LN, MADISON, WI 53719) FOR SAFETY PRACTICES PRIOR TO PERFORMING THESE FUNCTIONS. UNLESS OTHERWISE INDICATED, TOP CHORD SHALL HAVE PROPERLY ATTACHED STRUCTURAL PANELS AND BOTTOM CHORD SHALL HAVE A PROPERLY ATTACHED RIGID CEILING.

JULIUS LEE'S
CONS. ENGINEERS P.A.
1455 SW 4th AVENUE
DELRAY BEACH, FL 33444-2161

No: 34869
STATE OF FLORIDA

TC LL	PSF	
TC DL	PSF	
BC DL	PSF	
BC LL	PSF	
TOT. LD.	PSF	
DUR. FAC.		
SPACING		

REF	BOLT SPACING
DATE	11/26/03
DRWG	CNBOLTSP1103
-ENG	JL

TRULOX CONNECTION DETAIL

11 GAUGE (0.120" X 1.375") NAILS REQUIRED FOR TRULOX PLATE ATTACHMENT. FILL ROWS COMPLETELY WHERE SHOWN (⊕).

* NAILS MAY BE OMITTED FROM THESE ROWS.

THIS DETAIL MAY BE USED WITH SO. PINE, DOUGLAS-FIR OR HEM-FIR CHORDS WITH A MINIMUM 1.00 DURATION OF LOAD OR SPRUCE-PINE-FIR CHORDS WITH A MINIMUM 1.15 DURATION OF LOAD. CHORD SIZE OF BOTH TRUSSES MUST EXCEED THE TRULOX PLATE WIDTH.

TRULOX PLATE IS CENTERED ON THE CHORDS AND BENT BETWEEN NAIL ROWS.

REFER TO ENGINEER'S SEALED DESIGN REFERENCING THIS DETAIL FOR LUMBER, PLATES, AND OTHER INFORMATION NOT SHOWN.

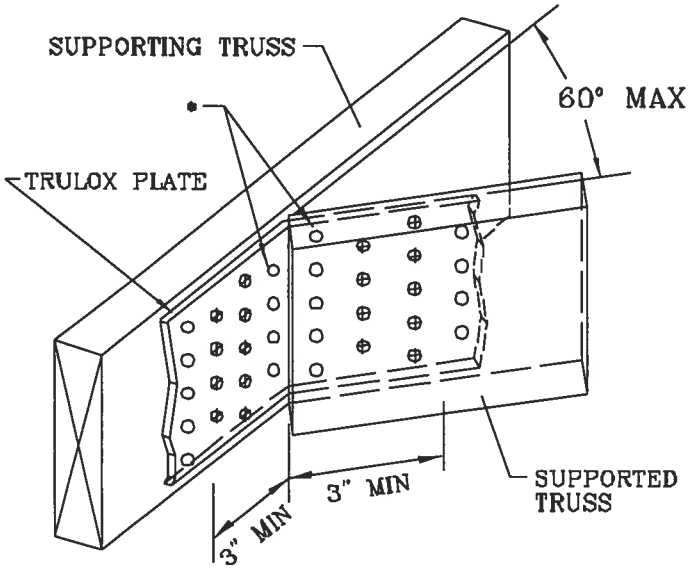

MINIMUM 3X6 TRULOX PLATE

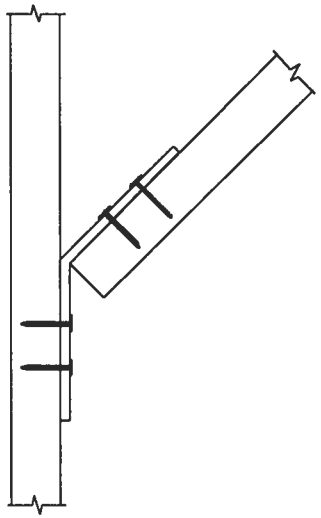

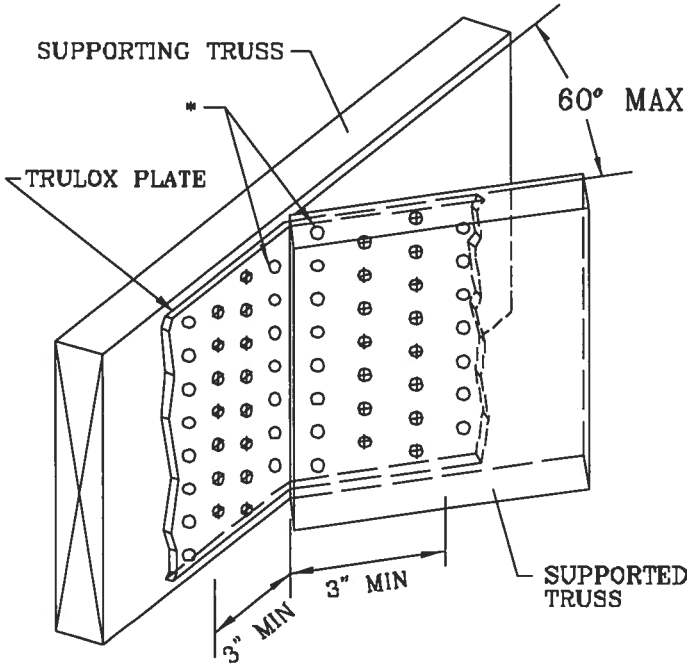

MINIMUM 5X6 TRULOX PLATE

TRULOX PLATE SIZE	REQUIRED NAILS PER TRUSS	MAXIMUM LOAD UP OR DOWN
3X6	9	350#
5X6	15	990#

THIS DRAWING REPLACES DRAWINGS 1,158,989 1,158,989/R 1,154,944 1,152,217 1,152,017 1,159,154 & 1,151,524

WARNING TRUSSES REQUIRE EXTREME CARE IN FABRICATING, HANDLING, SHIPPING, INSTALLING AND BRACING. REFER TO BCSI 1-03 (BUILDING COMPONENT SAFETY INFORMATION), PUBLISHED BY TPI (TRUSS PLATE INSTITUTE, 583 D'ONOFRIO DR., SUITE 200, MADISON, WI. 53719) AND WTCA (WOOD TRUSS COUNCIL OF AMERICA, 6300 ENTERPRISE LN, MADISON, WI 53719) FOR SAFETY PRACTICES PRIOR TO PERFORMING THESE FUNCTIONS. UNLESS OTHERWISE INDICATED, TOP CHORD SHALL HAVE PROPERLY ATTACHED STRUCTURAL PANELS AND BOTTOM CHORD SHALL HAVE A PROPERLY ATTACHED RIGID CEILING.

JULIUS LEE'S
CONS. ENGINEERS P.A.
1455 SW 4th AVENUE
DELRAY BEACH, FL 33444-2351

No: 34869
STATE OF FLORIDA

REF	TRULOX
DATE	11/26/03
DRWG	CNTRULOX1103
-ENG	JL

STRONG BACK DETAIL
SYSTEM-42 OR FLAT TRUSS

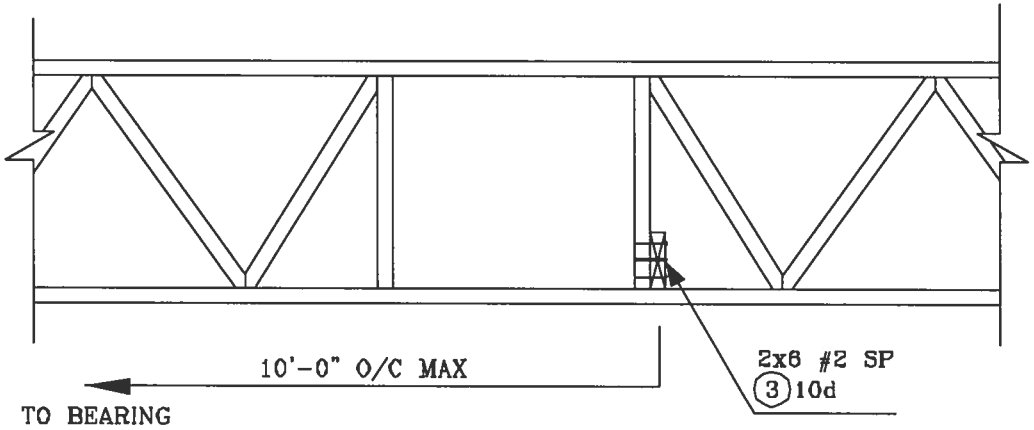

ALTERNATE DETAIL FOR STRONG BACK WITH VERTICAL NOT LINING UP

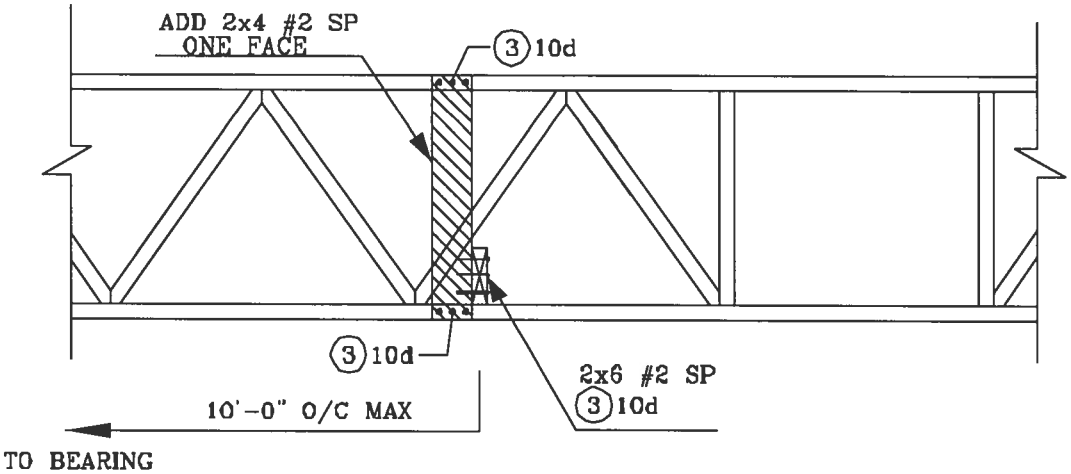

JULIUS LEE'S
CONS. ENGINEERS P.A.
1456 SW 4th AVENUE
DELRAY BEACH, FL 33444-2161

No: 34869
STATE OF FLORIDA

MIAMI-DADE

BUILDING CODE COMPLIANCE OFFICE (BCCO)
PRODUCT CONTROL DIVISION

MIAMI-DADE COUNTY, FLORIDA
METRO-DADE FLAGLER BUILDING
140 WEST FLAGLER STREET, SUITE 1603
MIAMI, FLORIDA 33130-1563
(305) 375-2901 FAX (305) 375-2908

NOTICE OF ACCEPTANCE (NOA)

Therma-Tru Corporation
108 Mutzfeld Rd.
Butler, IN 46721

SCOPE:

This NOA is being issued under the applicable rules and regulations governing the use of construction materials. The documentation submitted has been reviewed by Miami-Dade County Product Control Division and accepted by the Board of Rules and Appeals (BORA) to be used in Miami Dade County and other areas where allowed by the Authority Having Jurisdiction (AHJ).

This NOA shall not be valid after the expiration date stated below. The Miami-Dade County Product Control Division (In Miami Dade County) and/or the AHJ (in areas other than Miami Dade County) reserve the right to have this product or material tested for quality assurance purposes. If this product or material fails to perform in the accepted manner, the manufacturer will incur the expense of such testing and the AHJ may immediately revoke, modify, or suspend the use of such product or material within their jurisdiction. BORA reserves the right to revoke this acceptance, if it is determined by Miami-Dade County Product Control Division that this product or material fails to meet the requirements of the applicable building code.

This product is approved as described herein, and has been designed to comply with the High Velocity Hurricane Zone of the Florida Building Code.

DESCRIPTION: Premium Series 6'8 Opaque Steel Door w & wo sidelites (OS)

APPROVAL DOCUMENT: Drawing No. S-2149, titled ""Premium Series" 6-8 Single & Double Out-swing Steel Door", sheets 1 through 8, prepared by RW Building Consultants, Inc., dated 3/28/02, bearing the Miami-Dade County Product Control Approval stamp with the Notice of Acceptance number and approval date by the Miami-Dade County Product Control Division.

MISSILE IMPACT RATING: Large and Small Missile Impact and Non-Impact

LABELING: Each unit shall bear a permanent label with the manufacturer's name or logo, city, state and following statement: "Miami-Dade County Product Control Approved", unless otherwise noted herein.

RENEWAL of this NOA shall be considered after a renewal application has been filed and there has been no change in the applicable building code negatively affecting the performance of this product.

TERMINATION of this NOA will occur after the expiration date or if there has been a revision or change in the materials, use, and/or manufacture of the product or process. Misuse of this NOA as an endorsement of any product, for sales, advertising or any other purposes shall automatically terminate this NOA. Failure to comply with any section of this NOA shall be cause for termination and removal of NOA.

ADVERTISEMENT: The NOA number preceded by the words Miami-Dade County, Florida, and followed by the expiration date may be displayed in advertising literature. If any portion of the NOA is displayed, then it shall be done in its entirety.

INSPECTION: A copy of this entire NOA shall be provided to the user by the manufacturer or its distributors and shall be available for inspection at the job site at the request of the Building Official.

The submitted documentation was reviewed by **Raul Rodriguez**

PRODUCT CONTROL ACCEPTED

THERMA-TRU®

"PREMIUM SERIES" OUTSWING 6-8 SINGLE AND DOUBLE W/& W/OUT SIDELITES. INSULATED STEEL DOOR WITH WOOD FRAMES.

GENERAL NOTES

1. THIS PRODUCT IS DESIGNED TO MEET THE SOUTH FLORIDA BUILDING CODE 1994 EDITION FOR MIAMI-DADE COUNTY.
2. WOOD BUCKS BY OTHERS, MUST BE ANCHORED PROPERLY TO TRANSFER LOADS TO THE STRUCTURE.
3. PRODUCT ANCHORS SHALL BE AS LISTED AND SPACED AS SHOWN ON DETAILS. ANCHOR EMBEDMENT TO BASE MATERIAL SHALL BE BEYOND WALL DRESSING OR STUCCO.
4. DESIGNED PRESSURE RATING SEE TABLE PAGE 1.
5. MIAMI-DADE APPROVED IMPACT RESISTANT SHUTERS ARE REQUIRED FORE SIDELITES ONLY.
6. SIDELIES ARE AN OPTION AND CAN BE USED IN A SINGLE OR DOUBLE CONFIGURATION.
7. LOW PROFILE OUTSWING BUMP THRESHOLD RATED FOR +55.0 PSF & -55.0 PSF ON WATER FOR SINGLEUNITS.

INSULATED STEEL DOOR
(Common to all frame conditions)

Door & Sidelite Panel Construction:

Face sheets: 24 GA.(0.022")minimum thickness, Galvanized steel A-525 commercial quality - AKDQ per ASTM 620 with yield strength Fy(min.)=38,438 psi

Core design: Polyurethane foam core, with1.9 lbs. density by BASF.

Door Panel Construction: Flush or embossed type. The vertical edges of the skin, rolled formed to provide a mechanical interlock with finger jointed pine stiles. Wood end rails are butt jointed and pressure fitted with contact cement to the wood stiles at the corners.

Sidelite Panel Construction and Glazing: The vertical edges of the skin are rolled formed to provide a mechanical interlock with finger jointed pine stiles. Wood end rails are butt jointed to the wood stiles at the corners. The sidelite panels are sandwich glazed using a two piece lite frame.

Frame Construction: The frame is constructed from finger jointed Ponderosa Pine measuring 4.656" wide x 1.25" thick. The header is joined to the side jambs with (3) 16ga. 1/2" crown x 2" long staples at each side. The threshold is joined to the side jambs with (2) 16ga. 1/2" crown x 2.5" long staples at each side. The mullions are secured together in a sidelite application using #8 x 2 1/2" long PFH Wood Screws (6) screws per each mullion. The unit uses an Outswing Bumpface threshold, either Low Profile or High Water Dam.

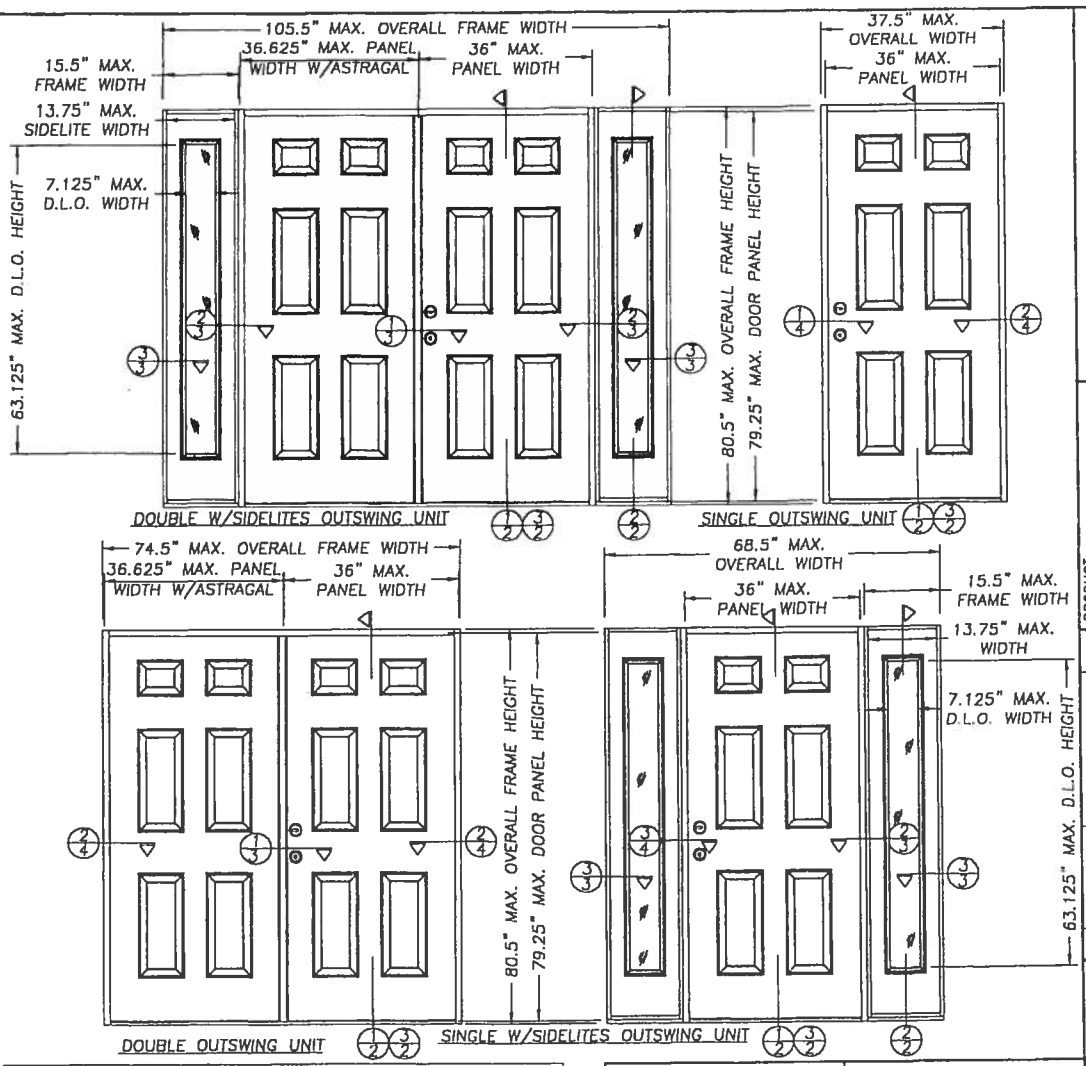

TABLE OF CONTENTS	
SHEET #	DESCRIPTION
1	TYPICAL ELEVATIONS & GENERAL NOTES
2	VERTICAL CROSS SECTIONS
3	HORIZONTAL CROSS SECTIONS
4	HORIZONTAL CROSS SECTIONS & NOTES
5	ANCHORING LOCATIONS & DETAILS
6	ANCHORING LOCATIONS & GLAZING DETAILS
7	UNIT COMPONENTS
8	BILL OF MATERIALS & UNIT COMPONENTS

DESIGN PRESSURE RATING		
UNIT TYPE	W/LOW PROFILE BUMP THRESHOLD	W/HIGH DAM BUMP THRESHOLD
SINGLE	+ 55.0 PSF - 67.0 PSF	+ 75.0 PSF - 75.0 PSF
DOUBLE	NOT APPROVED FOR WATER	+ 65.0 PSF - 65.0 PSF
SINGLE W/SIDELITES	+ 55.0 PSF - 67.0 PSF	+ 65.0 PSF - 65.0 PSF
DOUBLE W/SIDELITES	NOT APPROVED FOR WATER	+ 65.0 PSF - 65.0 PSF

Approved as complying with the Florida Building Code
Date June 20, 2002
NOA# 01 0829.04
Miami Dade Product Control Division
By

THERMA-TRU®
108 MUTZFELD Rd.
BUTLER, IN 46721
PH. (219) 868-5811

PRODUCT: "PREMIUM SERIES" 6-8 SINGLE & DOUBLE OUT-SWING STEEL DOOR

PART OR ASSEMBLY: TYPICAL ELEVATIONS & GENERAL NOTES

NO.	DATE	REVISIONS	BY
1	3/28/02	GENERAL REVISION	WLN

RW BUILDING CONSULTANTS, INC.
813.684.3831

DATE: 08/08/01
SCALE: N.T.S.
DWG. BY: TJH
CHK. BY: RW
DRAWING NO.: S-2149
SHEET 1 OF 8

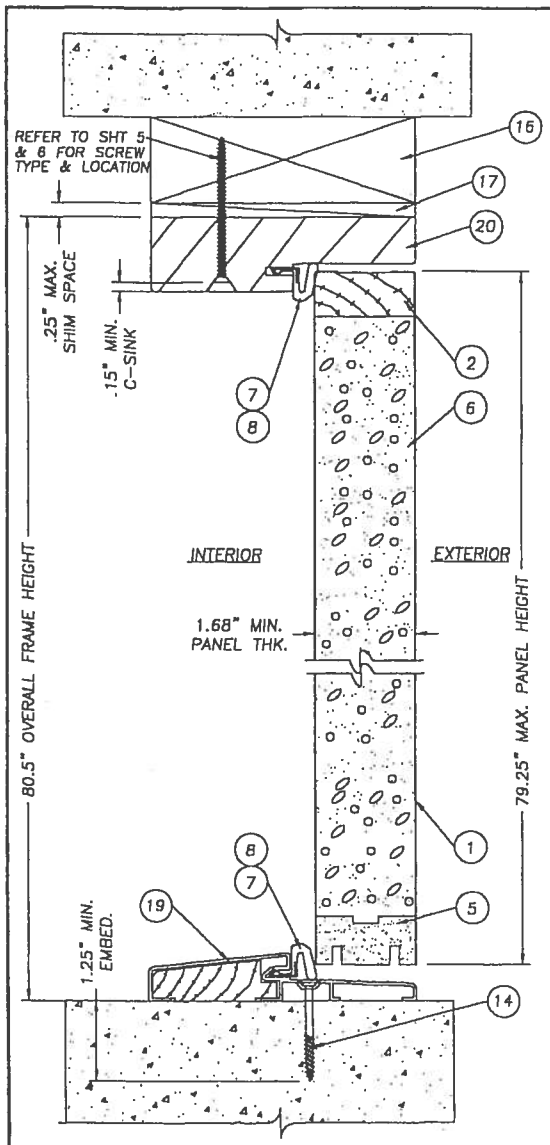

1/2 VERTICAL CROSS SECTION
DOOR PANEL W/ LOW PROFILE BUMP THRESHOLD

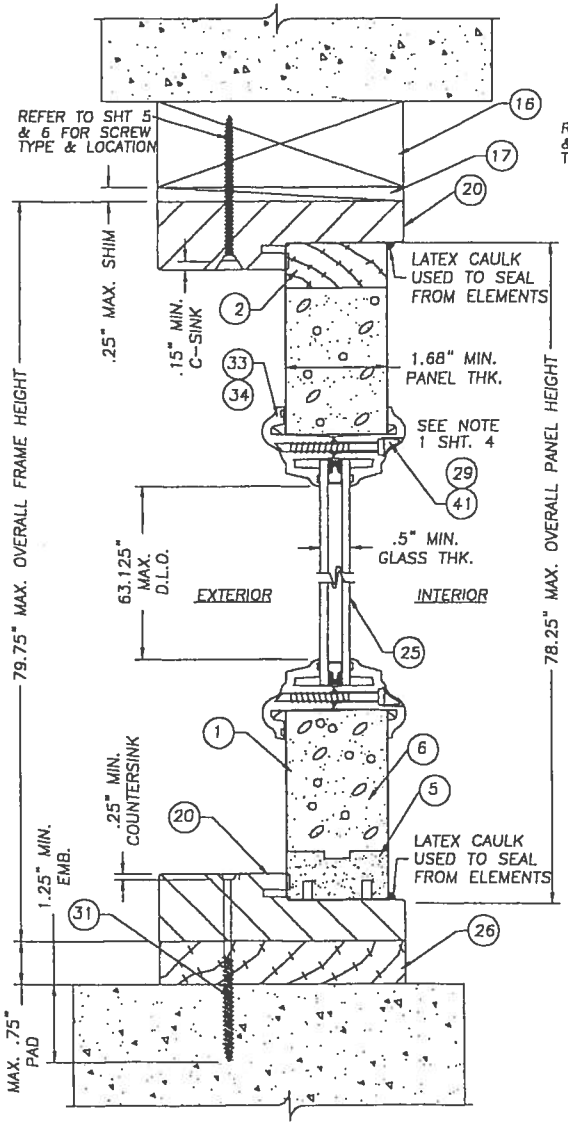

2/2 VERTICAL CROSS SECTION
SIDELITE PANEL

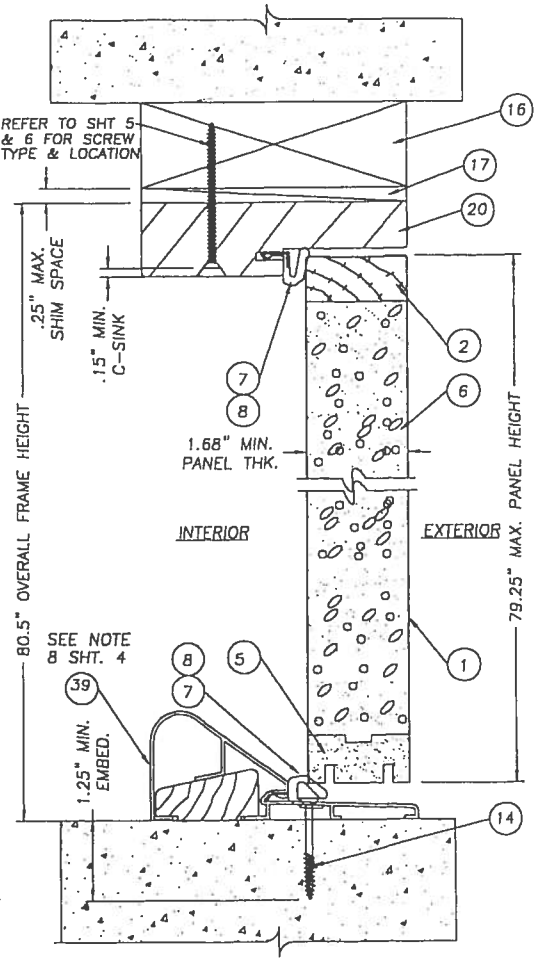

3/2 VERTICAL CROSS SECTION
DOOR PANEL W/ HIGH DAM THRESHOLD

Approved as complying with the Florida Building Code
Date Jun 20, 2002
NOA# 01-0926.06
Miami Dade Product Control Division
By

THERMATRU®
108 MUTZFELD Rd.
BUTLER, IN 46721
PH. (219) 868-5811

PRODUCT: "PREMIUM SERIES" 6-8 SINGLE & DOUBLE OUT-SWING STEEL DOOR

PART OR ASSEMBLY: VERTICAL CROSS SECTIONS

NO	DATE	GENERAL REVISION	WLN BY
1	3/28/02		

REVISIONS

RW BUILDING CONSULTANTS, INC.
813.684.3831

DATE: 08/08/01
SCALE: 1/2" = 1"
DWG. BY: TJH
CHK. BY: RW
DRAWING NO.: S-2149
SHEET 2 OF 8

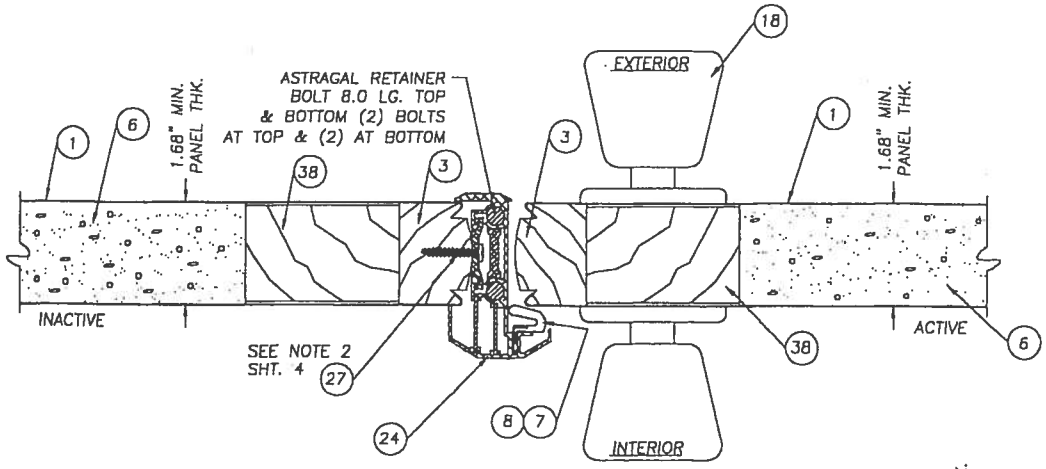

1/3 HORIZONTAL CROSS SECTION @ ASTRAGAL

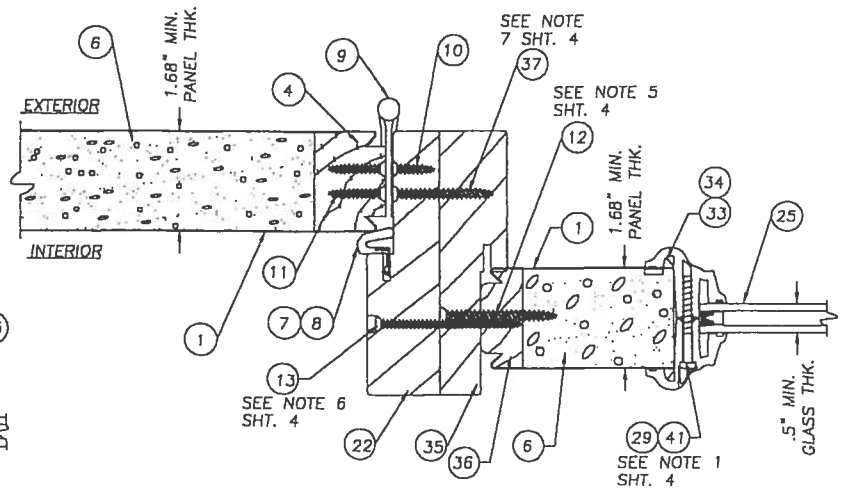

2/3 HORIZONTAL CROSS SECTION @ HINGE JAMB TO SIDELITE

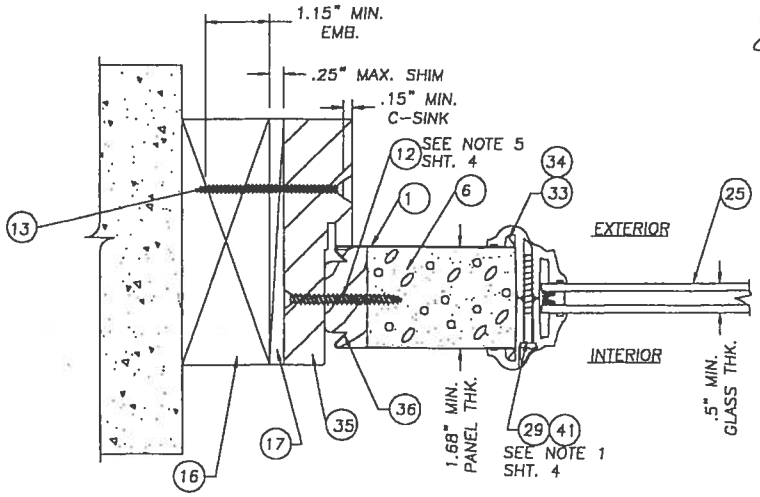

3/3 HORIZONTAL CROSS SECTION @ SIDELITE TO BUCK

Approved as complying with the Florida Building Code
Date June 20, 2002
NOA# 01-0626.09
Miami Dade Product Control Division
By

THERMATRU®
108 MUTZFELD Rd.
BUTLER, IN 46721
PH. (219) 868-5811

PRODUCT: "PREMIUM SERIES" 6-8 SINGLE & DOUBLE OUT-SWING STEEL DOOR

PART OR ASSEMBLY: HORIZONTAL CROSS SECTIONS

REVISIONS

NO.	DATE	GENERAL REVISION	WLN	BY
1	3/28/02			

RW BUILDING CONSULTANTS, INC.
813.684.3831

DATE: 08/08/01
SCALE: 1/2" = 1"
DWG. BY: TJH
CHK. BY: RW
DRAWING NO.: S-2149
SHEET 3 OF 8

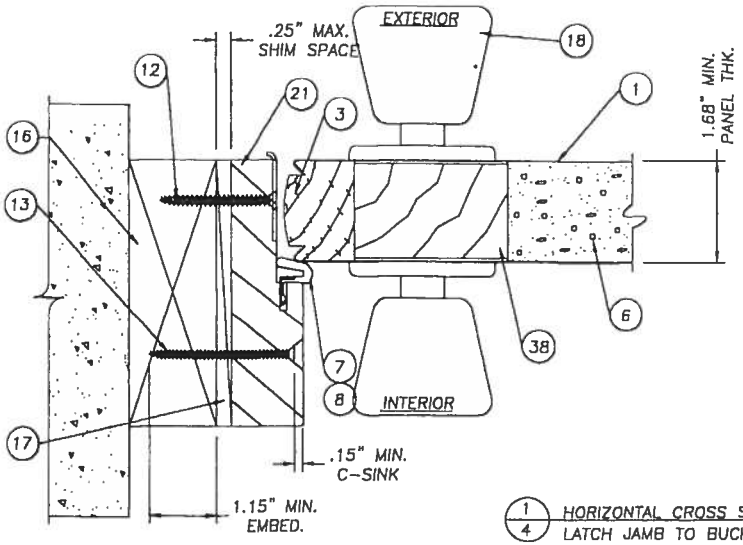

1/4 HORIZONTAL CROSS SECTION
LATCH JAMB TO BUCK,

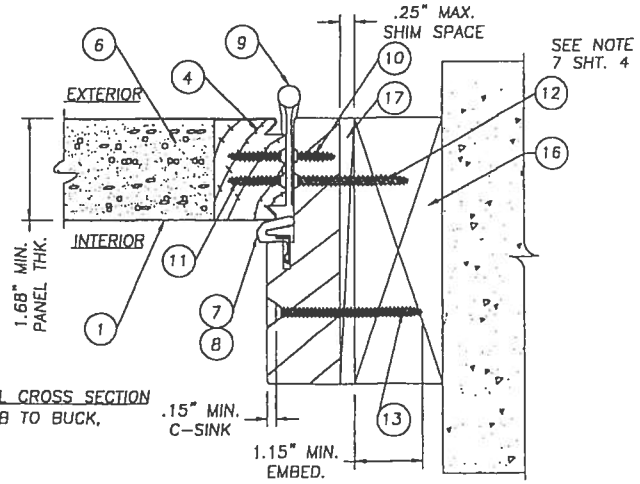

2/4 HORIZONTAL CROSS SECTION
HINGE JAMB TO BUCK,

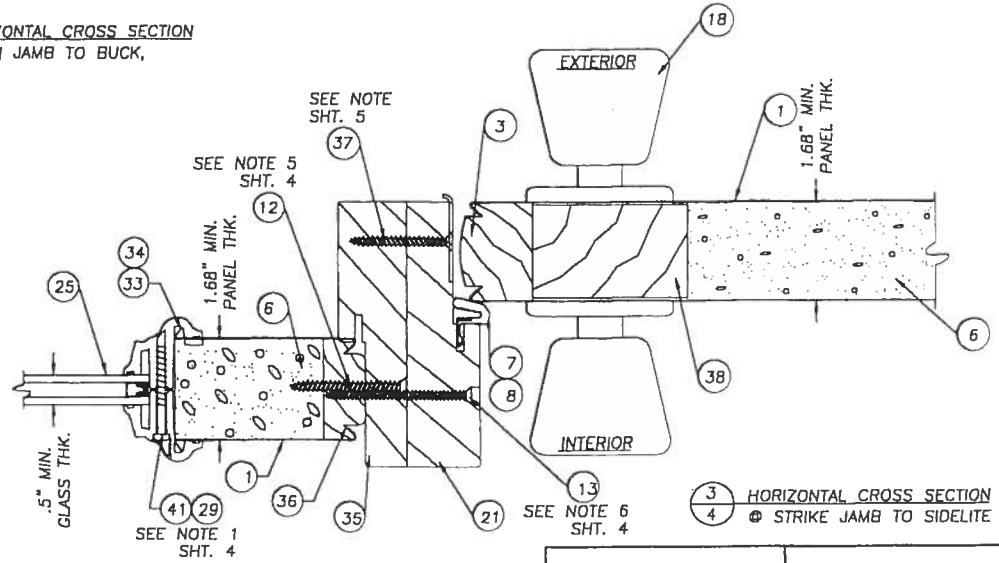

3/4 HORIZONTAL CROSS SECTION
@ STRIKE JAMB TO SIDELITE

NOTES:

1. SPACING FOR ITEM #29 & #41 (LITE FRAME SCREWS) IS AS FOLLOWS: FROM THE TOP DOWN ON SIDES; 3", 14.75", 26.5", 38.25", 50.5" & 62.25". THERE IS (1) SCREW BOTH TOP AND BOTTOM AT 4.25" IN FROM CORNER.
2. SPACING FOR ITEM #27 #8 x 1" PANHEAD SCREW ATTACHING THE ASTRAGAL TO THE INACTIVE DOOR IS AS FOLLOWS: FROM THE BOTTOM UP AND TOP DOWN 1", 3", 5", 26" AND (1) MORE 6" UP FROM THE STRIKE LOCATION.
3. THE HEAD JAMB IS ATTACHED TO THE SIDE JAMBS WITH (3) 16GA. x 1/2" CROWN x 2" STAPLES AT BOTH SIDE.
4. THE THRESHOLD IS ATTACHED TO THE SIDE JAMBS WITH (2) 16GA. x 1/2" CROWN x 2.5" STAPLES AT BOTH SIDE.
5. THE SIDELITE IS DIRECT SET INTO THE JAMB WITH ITEM #12 #10 x 2" PH.F.H. WOOD SCREW AT 6" DOWN FROM EACH CORNER AND A MAX. OF 12" O.C. ON THE SIDE JAMBS ONLY.
6. SPACING FOR ITEM #13, A #8 x 2 1/2" SCREW SECURING THE MULLIONS TOGETHER IS THE SAME AS THE PERIMETER ANCHORING SCREWS. 6" DOWN FROM THE TOP AND UP FROM THE BOTTOM WITH (4) MORE SPACED AT 13.7" O.C.
7. WHEN ATTACHING THE HINGE TO THE JAMB AND THE BUCK USE ITEM #12 A #10 x 2" SCREW. WHEN ATTACHING THE HINGE TO THE JAMB AND THE SIDELITE AT THE MULLION USE ITEM #37 A #10 x 1 3/4" SCREW.
8. ITEM #39, THE HIGH DAM THRESHOLD IS ONLY USED IN AN APPLICATION WHERE A HIGHER WATER PRESSURE MUST BE ACHIEVED.

Approved as complying with the Florida Building Code
Date June 10, 2002
NOA# 01-0426.06
Miami Dade Product Control Division
By

THERMATRU®
108 MUTZFELD Rd.
BUTLER, IN 46721
PH. (219) 868-5811

PRODUCT: "PREMIUM SERIES" 6-8 SINGLE & DOUBLE OUT-SWING STEEL DOOR

PART OR ASSEMBLY: HORIZONTAL CROSS SECTIONS & NOTES

NO.	DATE	REVISIONS	BY
1	3/28/02	GENERAL REVISION	WLN

RW BUILDING CONSULTANTS, INC.
813.684.3831

DATE: 08/08/01
SCALE: 1/2" = 1"
DWG. BY: TJH
CHK. BY: RW
DRAWING NO.: S-2149
SHEET 4 OF 8

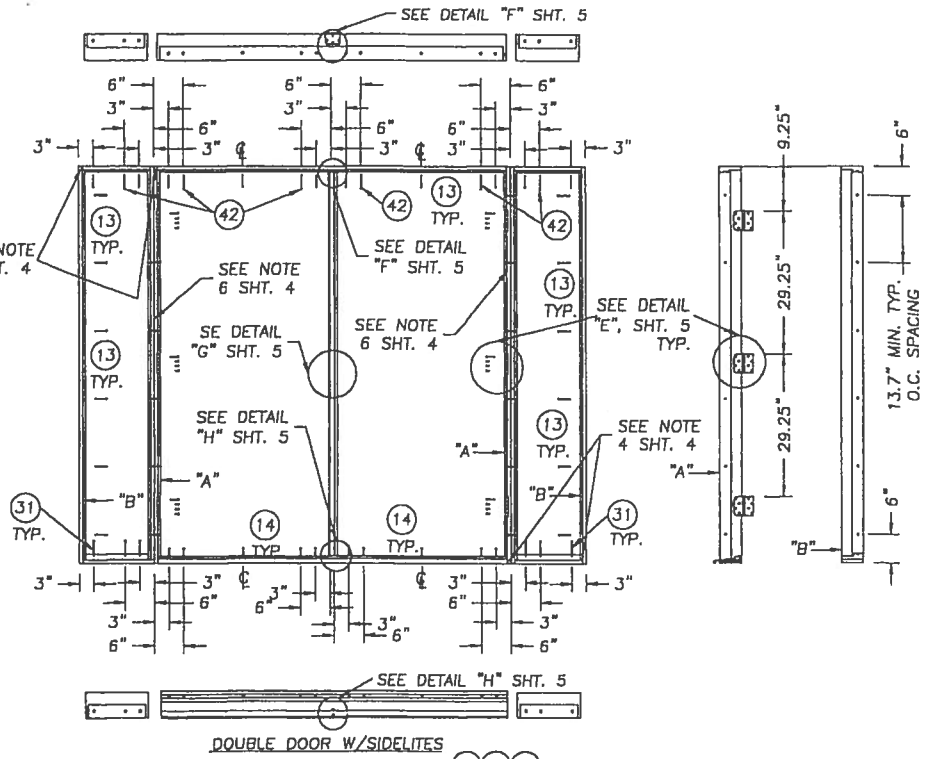

DOUBLE DOOR W/SIDELITES

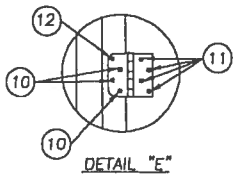

DETAIL "E"

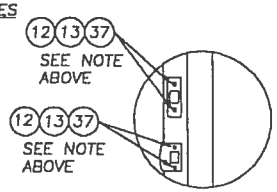

DETAIL "G"

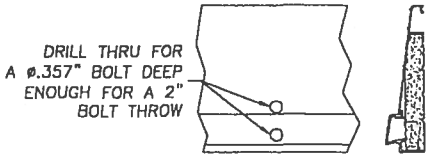

DETAIL "H"
ASTRAGAL THROW BOLTS AT THE THRESHOLD

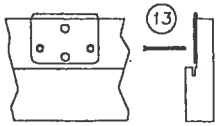

DETAIL "F"
ATTACH ASTRAGAL THROW BOLT STRIKE PLATE TO FRAME AS SHOWN.

NOTE:
WHEN ATTACHING THE STRIKE & DEADBOLT PLATES TO THE STRIKE JAMB AND BUCK USE A #10 x 2" SCREW. WHEN ATTACHING THE STRIKE & DEADBOLT PLATES TO THE ASTRAGAL USE A #8 x 2 1/2' SCREW. WHEN ATTACHING THE STRIKE & DEADBOLT PLATES TO THE STRIKE JAMB AND SIDELITE JAMB USE A #10 x 1 3/4" SCREW.

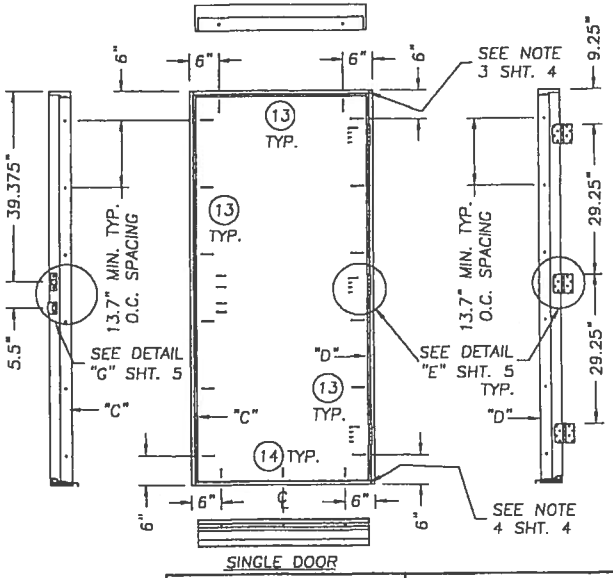

SINGLE DOOR

THERMATRU®
108 MUTZFELD Rd.
BUTLER, IN 46721
PH. (219) 868-5811

PRODUCT: "PREMIUM SERIES" 6-8 SINGLE & DOUBLE OUT-SWING STEEL DOOR

PART OR ASSEMBLY: ANCHORING LOCATIONS & DETAILS

NO.	DATE	GENERAL REVISION	BY
1	3/28/02	WLN	

REVISIONS

RW BUILDING CONSULTANTS, INC.
813.684.3831

Approved as complying with the Florida Building Code
Date Jul 20, 2002
NOA# 01-0824.08
Miami Dade Product Control Division
By

DATE: 08/08/01
SCALE: N.T.S.
DWG. BY: TJH
CHK. BY: RW
DRAWING NO.: S-2149
SHEET 5 OF 8

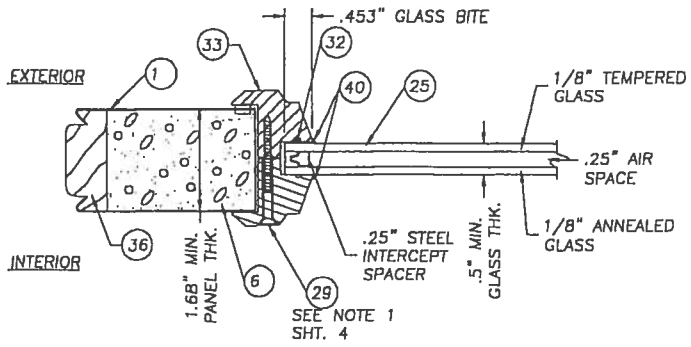

.5" INSULATED GLASS W/ PVC LITE FRAME GLAZING DETAIL

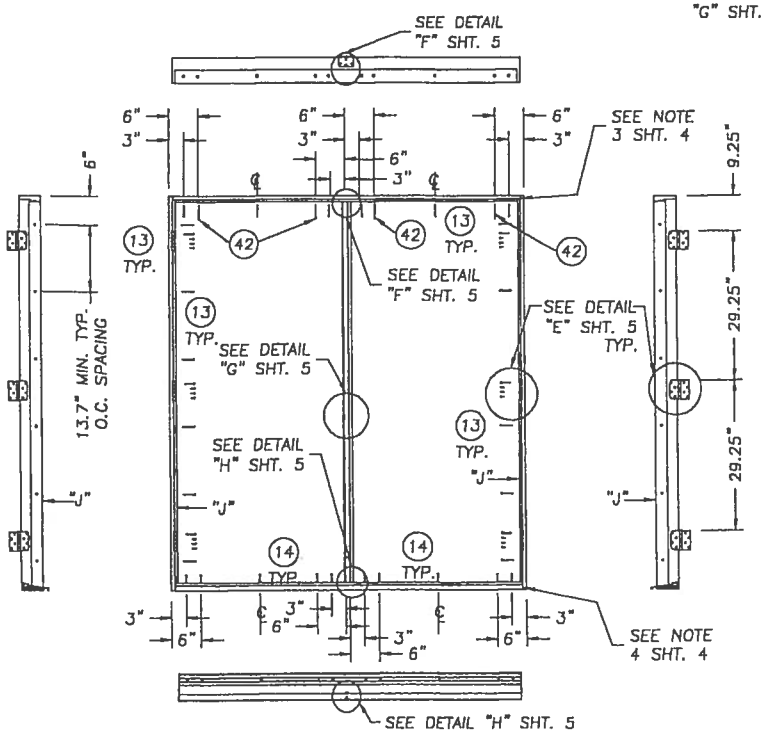

DOUBLE DOOR

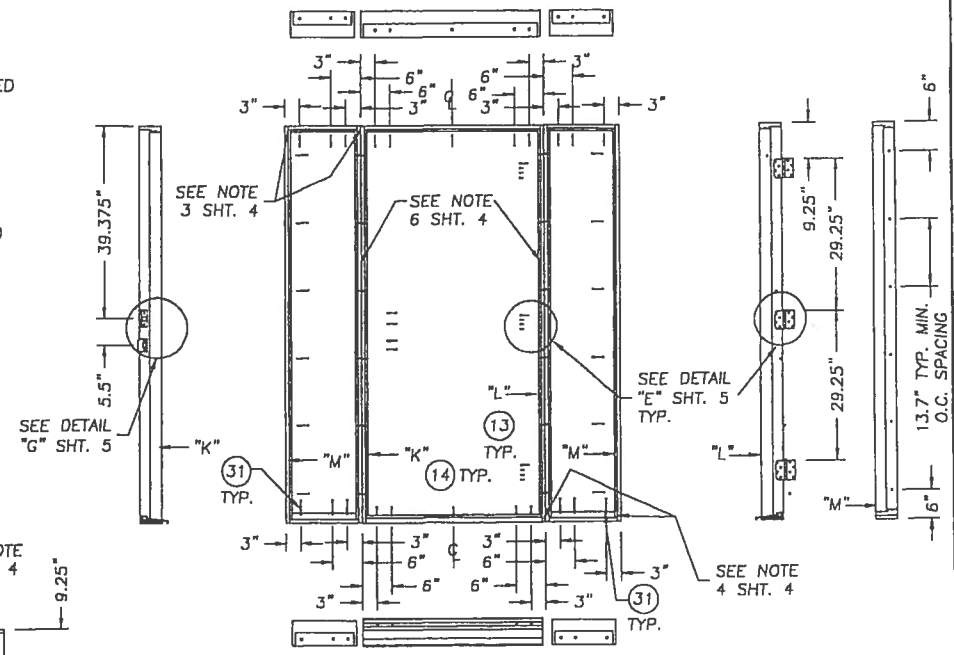

SINGLE DOOR W/SIDELITES

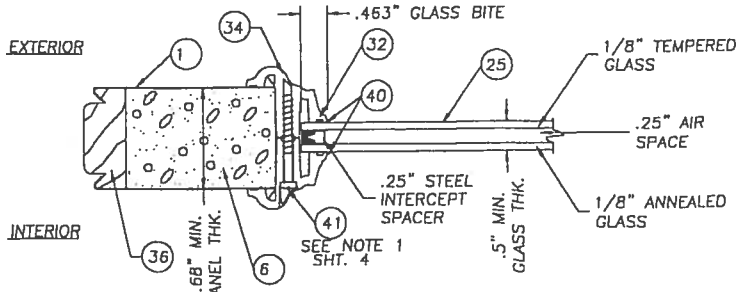

.5" INSULATED GLASS W/ BTS LITE FRAME GLAZING DETAIL

Approved as complying with the Florida Building Code
Date June 20, 2002
NOA# 01-0928.08
Miami Dade Product Control Division
By

THERMATRU®
108 MUTZFELD Rd.
BUTLER, IN 46721
PH. (219) 868-5811

PRODUCT: "PREMIUM SERIES" 6-8 SINGLE & DOUBLE OUT-SWING STEEL DOOR

PART OR ASSEMBLY: ANCHORING LOCATIONS & GLAZING DETAILS

NO.	DATE	REVISIONS	BY
1	3/28/02	GENERAL REVISION	WLN

RW BUILDING CONSULTANTS, INC.
813.684.3831

DATE: 08/08/01
SCALE: N.T.S.
DWG. BY: TJH
CHK. BY: RW
DRAWING NO.: S-2149
SHEET 6 OF 8

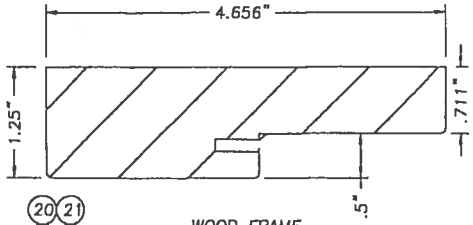

20 21 22 35

WOOD FRAME
FINGER JOINTED PONDEROSA PINE

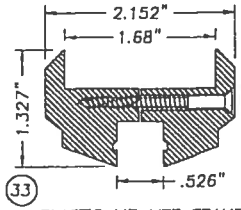

33

PLASTIC LIP LITE FRAME
EXTRUDED PVC

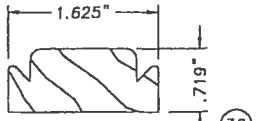

36

SIDELITE BLANK SIDE STILE
FINGER JOINTED PONDEROSA PINE

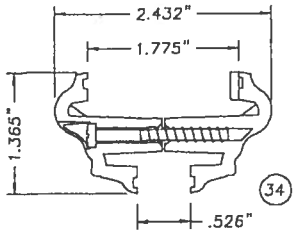

34

BTS PLASTIC LIP LITE FRAME
EXTRUDED BTS

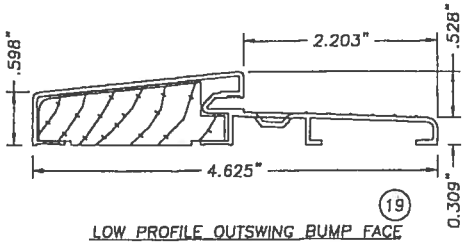

19

LOW PROFILE OUTSWING BUMP FACE
ALUMINUM/WOOD THRESHOLD
.050" WALL TYP.

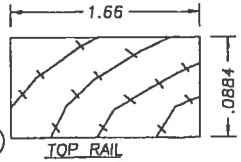

2

TOP RAIL
FINGER JOINTED PONDEROSA PINE

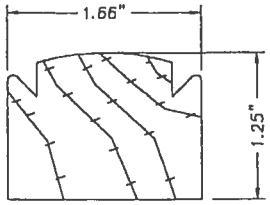

3

WOOD LATCH SIDE STILE

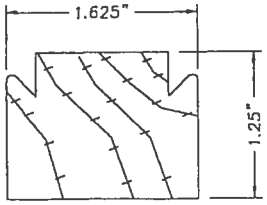

WOOD HINGE SIDE STILE 4

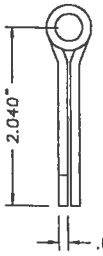

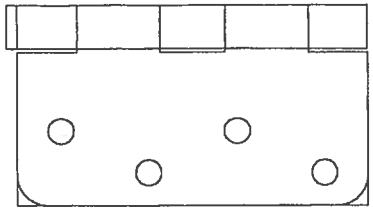

9

4 x 4 STEEL DOOR HINGE

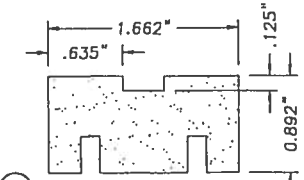

5

BOTTOM RAIL, WOOD COMPOSITE

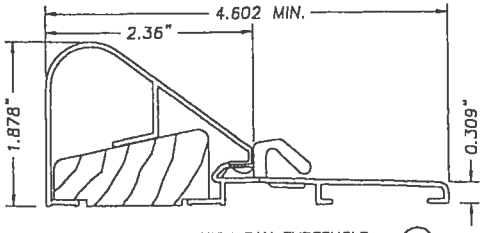

HIGH DAM THRESHOLD
MIN. WALL THK. = 0.050"
SEE NOTE 8 SHT. 4

39

NOTE
ALL DIMENSIONS ARE MINIMUM.
DIMENSIONS ARE THE LARGEST TESTED.

Approved as complying with the Florida Building Code
Date June 20, 2002
NOA# 01-0628.08
Miami Dade Product Control Division
By

THERMA-TRU®
108 MUTZFELD Rd.
BUTLER, IN 46721
PH. (219) 868-5811

PRODUCT: "PREMIUM SERIES" 6-8 SINGLE & DOUBLE OUT-SWING STEEL DOOR

PART OR ASSEMBLY: UNIT COMPONENTS

NO.	DATE	REVISIONS	BY
1	3/28/02	GENERAL REVISION	WLN

RW BUILDING CONSULTANTS, INC.
813.684.3831

DATE: 08/08/01
SCALE: N.T.S
DWG. BY: TJH
CHK. BY: RW
DRAWING NO.: S-2149
SHEET 7 OF 8

Item	DESCRIPTION	Material
1	DOOR SKIN; PREMIUM SERIES 24GA. (.022" MIN.)	STEEL
2	TOP RAIL (1.628" x .851" THERMA-TRU PONDEROSA PINE)	WOOD
3	LATCH STILE (THERMA-TRU, PONDEROSA PINE 1.66" x 1.253")	WOOD
4	HINGE STILE (THERMA-TRU, PONDEROSA PINE 1.625" x 1.25")	WOOD
5	BOTTOM RAIL (1.662" x 0.892" THERMA-TRU WOOD COMPOSITE)	WOOD COMPOSITE
6	POLYURETHANE FOAM (BASF, 1.9lbs. DENSITY)	FOAM
7	SHORT REACH COMPRESSION WEATHERSTRIP (THREMA-TRU)	FOAM
8	LONG REACH COMPRESSION WEATHERSTRIP (THREMA-TRU)	FOAM
9	4" x 4" HINGE .097" THK. (THERMA-TRU)	STEEL
10	#10 x 3/4" lg. PFH WOOD SCREW (Hinge to Frame)	STEEL
11	#10 x 1" LG. PFH WOOD SCREW	STEEL
12	#10 x 2" LG. PFH WOOD SCREW	STEEL
13	#8 x 2 1/2" LG. PFH WOOD SCREW	STEEL
14	3/16" TAPCON ANCHOR (ELCO, 1.75" MIN. LG.)	STEEL
15	NOTE USED	
16	2x WOOD BUCK	WOOD
17	MAX. 1/4" SHIM MATERIAL	WOOD
18	KWIKSET TITAN 700 SERIES PASSAGE LOCK	–
19	ONE PIECE BUMP FACE THRESHOLD LOW PROFILE (THERMA-TRU)	ALUM./WOOD
20	4.656" HEADER (THERMA-TRU, PONDEROSA PINE)	WOOD
21	4.656" STRIKE JAMB (THERMA-TRU, PONDEROSA PINE)	WOOD
22	4.656" HINGE JAMB (THERMA-TRU, PONDEROSA PINE)	WOOD
23	KWIKSET TITAN 700 SERIES DEADBOLT	–
24	ASTRAGAL WINDJAMBER II WR68T (.052" WALL)	ALUM.
25	GLAZING, 1/2" INSULATED TEMPERED GLASS	GLASS
26	3/4" THK. PRESSURE TREATED SIDELITE PAD	WOOD
27	#8 x 1" LG. PANHEAD SHEET METAL SCREW	STEEL
28	NOT USED	–
29	#6-18 x 1 3/4" PHILLIPS FLATHEAD SCREW (FOR ITEM #33)	STEEL
30	NOT USED	–
31	3/16" TAPCON ANCHOR (ELCO, 3.25" MIN. LG.)	STEEL
32	1/8 THK. CELLULAR GLAZING TAPE (STIK-II TAPE)	–
33	PLASTIC LIP LITE FRAME (PVC, THERMA-TRU)	PVC
34	PLASTIC LIP LITE FRAME (BTS, THERMA-TRU)	BTS
35	4.656" BLANK JAMB (THERMA-TRU, PONDEROSA PINE)	WOOD
36	SIDELITE SIDE STILE (THERMA-TRU, 1.625" x .719" PONDEROSA PINE)	WOOD
37	#10 x 1 3/4" LG. PFH WOOD SCREW	STEEL
38	LOCK BLOCK 2.625" x 10.375" x 1.625" THK.	WOOD
39	HIGH WATER DAM THRESHOLD (THERMA-TRU)	ALUM.
40	SILICONE CAULK	SILICONE
41	#8-10 x 1 1/2" PLASCREW (FOR ITEM #34)	STEEL
42	#10 x 3" LG. PFH WOOD SCREW	STEEL

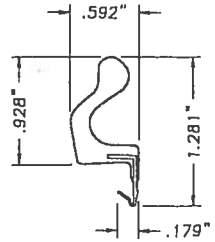

(8)

LONG REACH COMPRESSION WEATHERSTRIP
FOAM CELL CORE W/VINYL JACKET

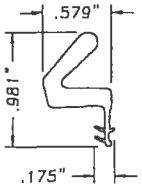

(7)

COMPRESSION WEATHERSTRIP
BY THERMA-TRU
FOAM CELL CORE W/VINYL JACKET

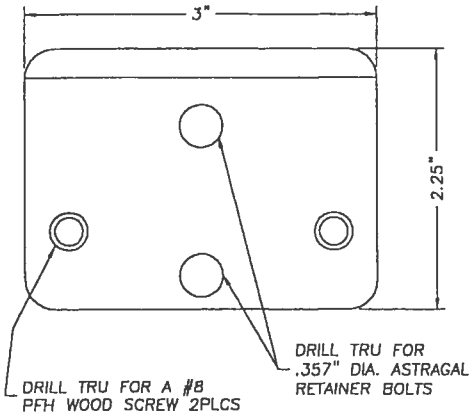

WINDJAMBER II WR68T STRIKE PLATE

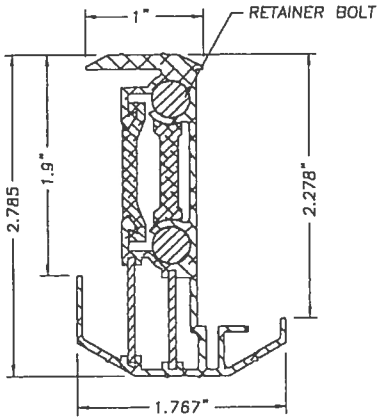

(24)

WINDJAMBER II WR68T
ASTRAGAL (ALUMINUM .052" WALL TYP.)

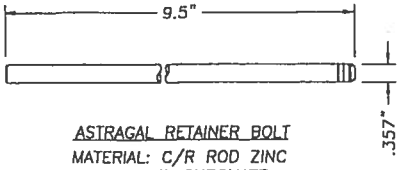

ASTRAGAL RETAINER BOLT
MATERIAL: C/R ROD ZINC
& YELLOW CHROMATE

Approved as complying with the Florida Building Code
Date June 20, 2001
NOA# 01-0628.03
Miami Dade Product Control Division
By

THERMA-TRU®
108 MUTZFELD Rd.
BUTLER, IN 46721
PH. (219) 868-5811

PRODUCT: "PREMIUM SERIES" 6-8 SINGLE & DOUBLE OUT-SWING STEEL DOOR

PART OR ASSEMBLY: BILL OF MATERIALS & UNIT COMPONENTS

NO	DATE	GENERAL REVISION	BY
1	3/28/02	WLN	

REVISIONS

RW BUILDING CONSULTANTS, INC.
813.684.3831

DATE: 08/08/01
SCALE: N.T.S.
DWG. BY: TJH
CHK. BY: RW
DRAWING NO.: S-2149
SHEET 8 OF 8

MIAMI-DADE

BUILDING CODE COMPLIANCE OFFICE (BCCO)
PRODUCT CONTROL DIVISION

MIAMI-DADE COUNTY, FLORIDA
METRO-DADE FLAGLER BUILDING
140 WEST FLAGLER STREET, SUITE 1603
MIAMI, FLORIDA 33130-1563
(305) 375-2901 FAX (305) 375-2908

NOTICE OF ACCEPTANCE (NOA)

MI Home Products, Inc.
650 West Market Street
Gratz, PA 17030

SCOPE:
This NOA is being issued under the applicable rules and regulations governing the use of construction materials. The documentation submitted has been reviewed by Miami-Dade County Product Control Division and accepted by the Board of Rules and Appeals (BORA) to be used in Miami Dade County and other areas where allowed by the Authority Having Jurisdiction (AHJ).

This NOA shall not be valid after the expiration date stated below. The Miami-Dade County Product Control Division (In Miami Dade County) and/or the AHJ (in areas other than Miami Dade County) reserve the right to have this product or material tested for quality assurance purposes. If this product or material fails to perform in the accepted manner, the manufacturer will incur the expense of such testing and the AHJ may immediately revoke, modify, or suspend the use of such product or material within their jurisdiction. BORA reserves the right to revoke this acceptance, if it is determined by Miami-Dade County Product Control Division that this product or material fails to meet the requirements of the applicable building code.

This product is approved as described herein, and has been designed to comply with the Florida Building Code, including the High Velocity Hurricane Zone.

DESCRIPTION: Series "BetterBilt D185SH/D3185SH" Aluminum Single Hung Window

APPROVAL DOCUMENT: Drawing No. **S-2422,** titled "Non-Impact Single Hung Window Rectangle Circle Top & Oriel", sheets 1 through 5 of 5, prepared by RW Building Consultants, inc, dated 10/27/03 with revision "2", dated 02/10/04, signed and sealed by Wendell Haney, P.E., bearing the Miami-Dade County Product Control Approval stamp with the Notice of Acceptance number and approval date by the Miami-Dade County Product Control Division.

MISSILE IMPACT RATING: None

LABELING: Each unit shall bear a permanent label with the manufacturer's name or logo, city, state and following statement: "Miami-Dade County Product Control Approved", unless otherwise noted herein.

RENEWAL of this NOA shall be considered after a renewal application has been filed and there has been no change in the applicable building code negatively affecting the performance of this product.

TERMINATION of this NOA will occur after the expiration date or if there has been a revision or change in the materials, use, and/or manufacture of the product or process. Misuse of this NOA as an endorsement of any product, for sales, advertising or any other purposes shall automatically terminate this NOA. Failure to comply with any section of this NOA shall be cause for termination and removal of NOA.

ADVERTISEMENT: The NOA number preceded by the words Miami-Dade County, Florida, and followed by the expiration date may be displayed in advertising literature. If any portion of the NOA is displayed, then it shall be done in its entirety.

INSPECTION: A copy of this entire NOA shall be provided to the user by the manufacturer or its distributors and shall be available for inspection at the job site at the request of the Building Official.
This NOA consists of this page 1 and evidence page E-1, as well as approval document mentioned above.
The submitted documentation was reviewed by **Theodore Berman, P.E.**

2/13/2003

PRODUCT CONTROL ACCEPTED

MI Home Products, Inc.

NOTICE OF ACCEPTANCE: EVIDENCE SUBMITTED

A. DRAWINGS

1. Manufacturer's die drawings and sections.
2. Drawing No. **S-2422,** titled "Non-Impact Single Hung Window Rectangle Circle Top & Oriel", sheets 1 through 5 of 5, prepared by RW Building Consultants, inc, dated 10/27/03 with revision "2", dated 02/10/04, signed and sealed by Wendell Haney, P.E.

B. TESTS

1. Test reports on 1) Air Infiltration Test, per FBC, TAS 202-94
   2) Uniform Static Air Pressure Test, Loading per FBC, TAS 202-94
   3) Water Resistance Test, per FBC, TAS 202-94
   4) Forced Entry Test, per FBC 2411.3.2.1 and TAS 202-94

   along with marked-up drawings and installation diagram of an aluminum single hung window, prepared by Architectural Testing, Inc., Test Report No. **ATI 03056**, dated 11/11/03, signed by Joseph A. Reed, P.E.

C. CALCULATIONS

1. Anchor Calculations, ASTM-E1300-98, and structural analysis, prepared by R.W. Building Consultants, Inc., dated 12/11/03, signed and sealed by Lyndon F. Schmidt, P.E.
2. Revised Anchor Calculations, and structural analysis, prepared by R.W. Building Consultants, Inc., dated 02/10/04, signed and sealed by Lyndon F. Schmidt, P.E.

D. QUALITY ASSURANCE

1. Miami Dade Building Code Compliance Office (BCCO).

E. MATERIAL CERTIFICATIONS

1. None.

F. STATEMENTS

1. Statement letter of conformance and no financial interest, dated December 09, 2003, signed and sealed by Lyndon F. Schmidt, P.E.
2. Statement letter of no financial interest with the laboratory that performed the Test Report No. **ATI 03056**, dated November 08, 2003, signed by Stu White, Design Engineering Manager.

G. OTHER

1. Letter from the consultant stating that the product is in compliance with the Florida Building Code (FBC).

Theodore Berman, P.E.
Deputy Director, Product Control Division
NOA No 03-1215.02
Expiration Date: March 04, 2009
Approval Date: March 04, 2004

MI HOME PRODUCTS

650 WEST MARKET STREET • GRATZ, PA • 17030-0370

SERIES BETTERBILT D185SH/D3185SH ALUMINUM SINGLE HUNG WINDOW

GENERAL NOTES:

1. THIS PRODUCT IS DESIGNED TO COMPLY WITH THE "HVHZ" OF THE FLORIDA BUILDING CODE.
2. WOOD BUCKS MUST BE ANCHORED PROPERLY TO TRANSFER LOADS TO STRUCTURE AND TO BE REVIEWED BY BUILDING OFFICIAL.
3. PRODUCT ANCHORS SHALL BE AS LISTED AND SPACED AS SHOWN ON DETAILS. ANCHOR EMBEDMENT TO BASE MATERIAL SHALL BE BEYOND WALL DRESSING OR STUCCO.
4. FOR DESIGN PRESSURE RATING SEE TABLE THIS SHEET.
5. INSTALLATION OF THIS SYSTEM IN HVHZ AREA REQUIRES THE USE OF APPROVED SHUTTER/EXTERNAL PROTECTION DEVICE COMPLYING WITH HVHZ REQUIREMENTS; INSTALLATION OF THIS SYSTEM OUTSIDE OF HVHZ SHALL MEET THE APPLICABLE CODE REQUIREMENTS FOR WINDBORNE DEBRIS PROTECTION.
6. THIS PRODUCT MEETS WATER REQUIREMENTS FOR HIGH VELOCITY HURRICANE ZONES.

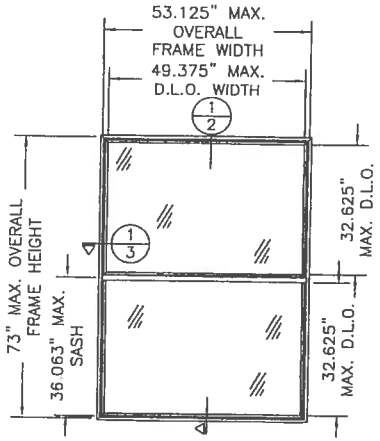

53" x 73" SINGLE HUNG WINDOW

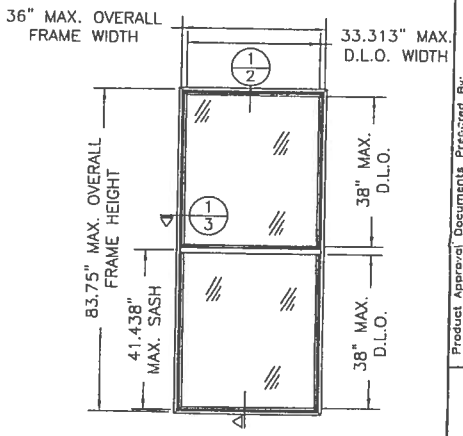

37" x 84" SINGLE HUNG WINDOW

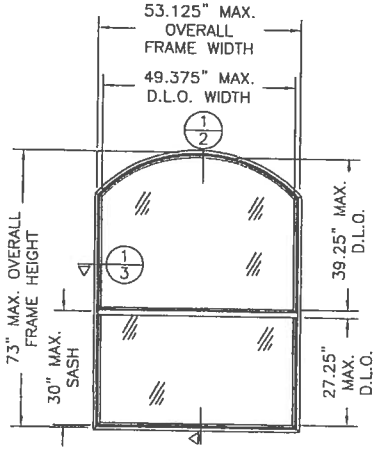

53" x 73" SINGLE HUNG WINDOW
CIRCLE TOP ORIEL

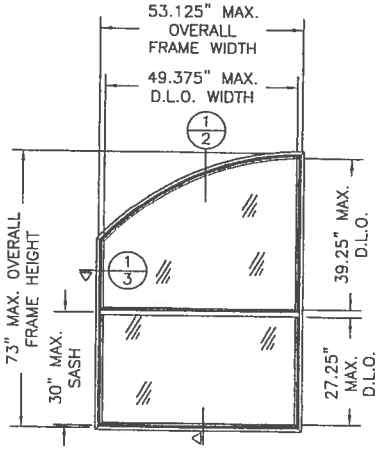

53" x 73" SINGLE HUNG WINDOW
HALF CIRCLE TOP ORIEL

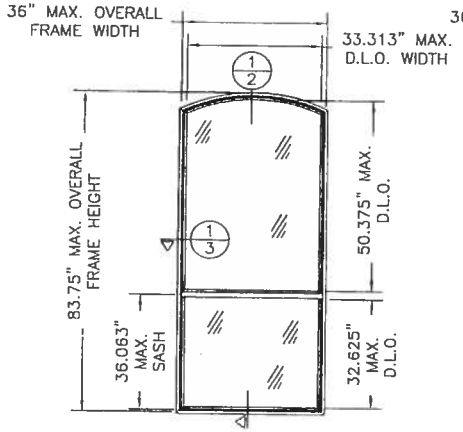

37" x 84" SINGLE HUNG WINDOW
CIRCLE TOP ORIEL

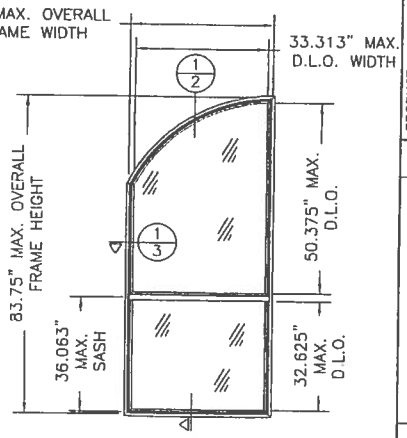

37" x 84" SINGLE HUNG WINDOW
HALF CIRCLE TOP ORIEL

TABLE OF CONTENTS

SHEET #	DESCRIPTION
1	GENERAL NOTES & TYPICAL ELEVATIONS
2	VERTICAL CROSS SECTIONS
3	HORIZONTAL CROSS SECTIONS & GLAZING DETAIL
4	ANCHORING LOCATIONS
5	COMPONENTS, BILL OF MATERIALS

DESIGN PRESSURE RATINGS (PSF)

GLASS	MAX. SIZE	DP POS.	DP NEG.
1/8" Temp.	OA 53" x 73"	+56.7	−69.3
1/8" Temp.	OA 37" x 84"	+56.7	−69.3
3/16" Ann.	OA 53" x 73"	+42.0	−42.0
3/16" Ann.	OA 37" x 84"	+56.7	−58.0

ALL ELEVATIONS ARE VIEWED FROM EXTERIOR

Approved as complying with the Florida Building Code
Date 03/02/04
NOA# 03-1215.02
Miami-Dade Product Control
Division
By Theodore Beenen

Product Approval Documents Prepared By:
BUILDING CONSULTANTS, INC.
P.O. Box 230 Valrico FL. 33595
Phone No : 813 659 0197
Florida Board of Professional Engineers
Certificate of Authorization No. 9813
Wendell Hicks, P.E. No. 41158
2/10/04

PRODUCT: NON-IMPACT SINGLE HUNG WINDOW RECTANGLE, CIRCLE TOP & ORIEL

PART OR ASSEMBLY: GENERAL NOTES & TYPICAL ELEVATIONS

NO	DATE	REVISIONS	BY
2	2/10/04	CORRECT DP TABLE	RW
1	01/04	REVISED PER DADE LETTER	WH

DATE: 10/27/03
SCALE: N.T.S
DWG. BY: TJH
CHK. BY: RW
DRAWING NO: S-2422
SHEET 1 OF 5

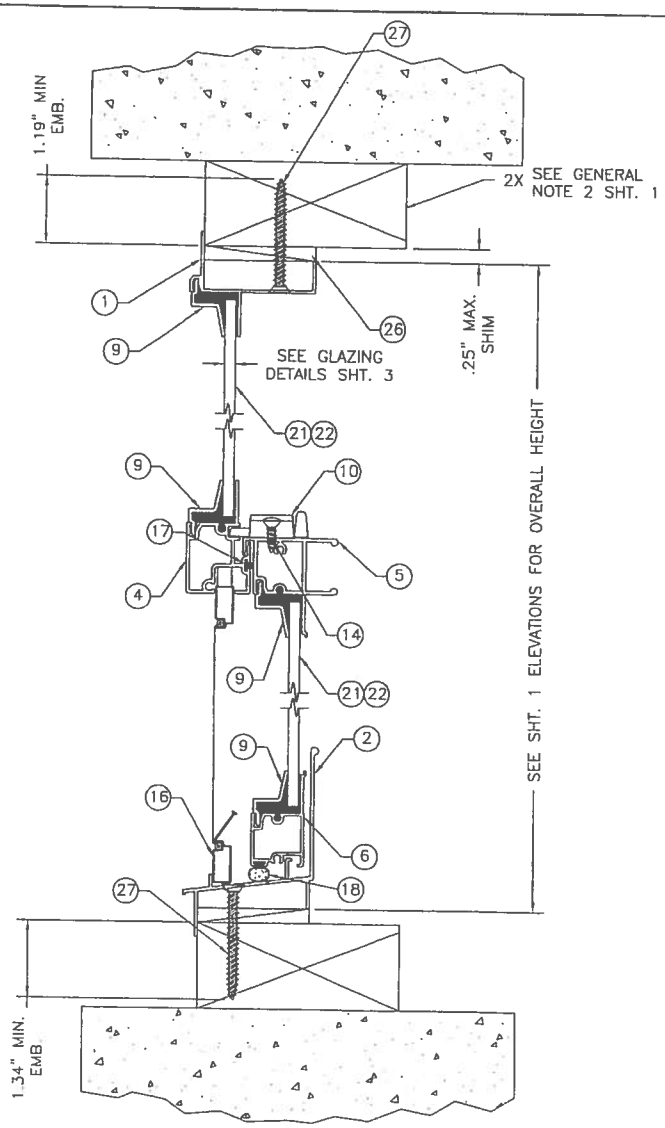

1/2 VERTICAL CROSS SECTION W/2X BUCK

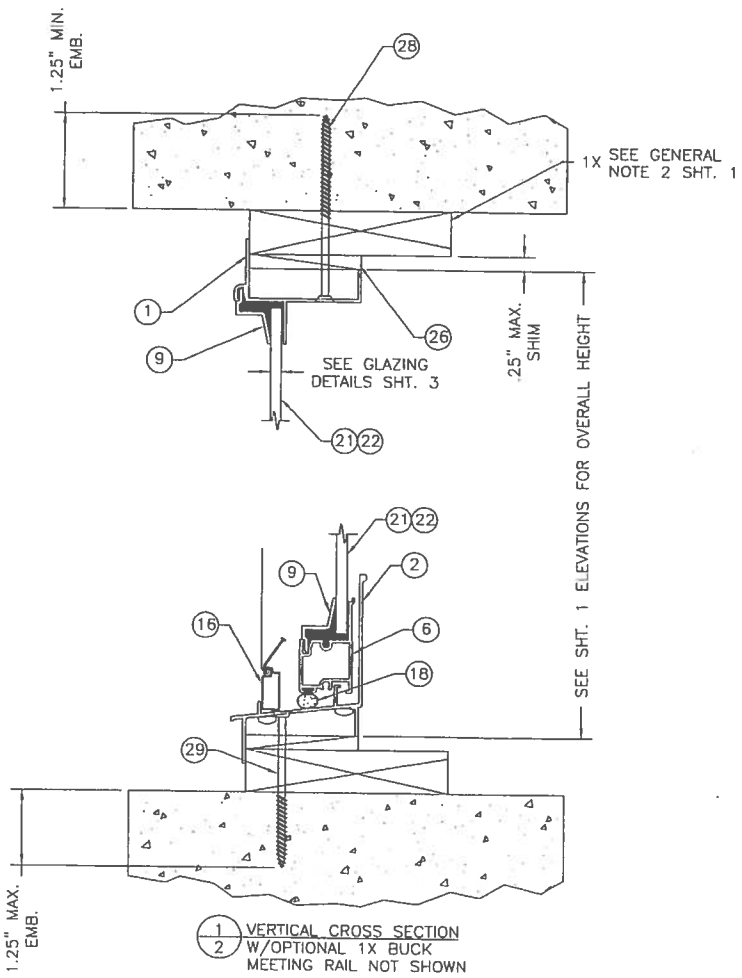

1/2 VERTICAL CROSS SECTION W/OPTIONAL 1X BUCK MEETING RAIL NOT SHOWN

Approved as complying with the Florida Building Code
Date 03/04/04
NOA# 02-1215.02
Miami-Dade Product Control Division
By

Product Approval Documents Prepared By:
RW BUILDING CONSULTANTS, INC.
P.O. Box 230 Valrico FL 33595
Phone No.: 813.659.9197
Florida Board of Professional Engineers
Certificate of Authorization No. 9813
Wendell Hoag P.E. No. 54128
2/10/04

PRODUCT: NON-IMPACT SINGLE HUNG WINDOWS RECTANGLE, CIRCLE TOP & OREIAL

PART OR ASSEMBLY: VERTICAL CROSS SECTIONS

NO.	DATE	REVISIONS	BY
2	2/10/04	CORRECT DP TABLE	RW
1	01/04	REVISED PER DADE LETTER	WH

DATE 10/27/03
SCALE: N.T.S.
DWG. BY: TJH
CHK. BY: RW
DRAWING NO. S-2422
SHEET 2 OF 5

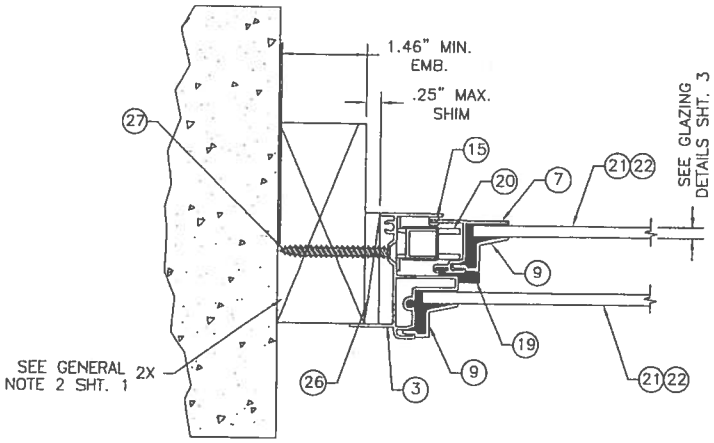

1/3 HORIZONTAL CROSS SECTION W/2X BUCK

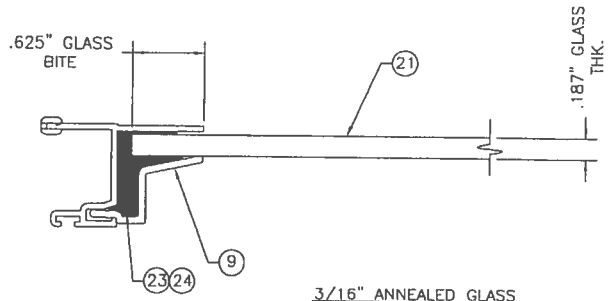

3/16" ANNEALED GLASS GLAZING DETAIL
GLASS TYPE "A"

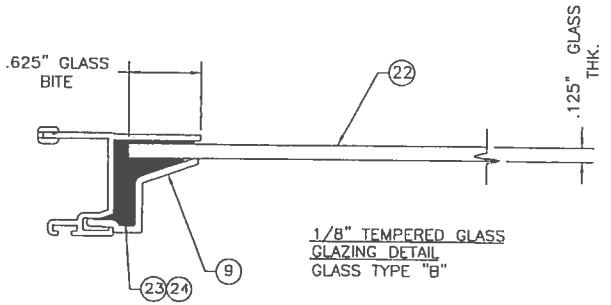

1/8" TEMPERED GLASS GLAZING DETAIL
GLASS TYPE "B"

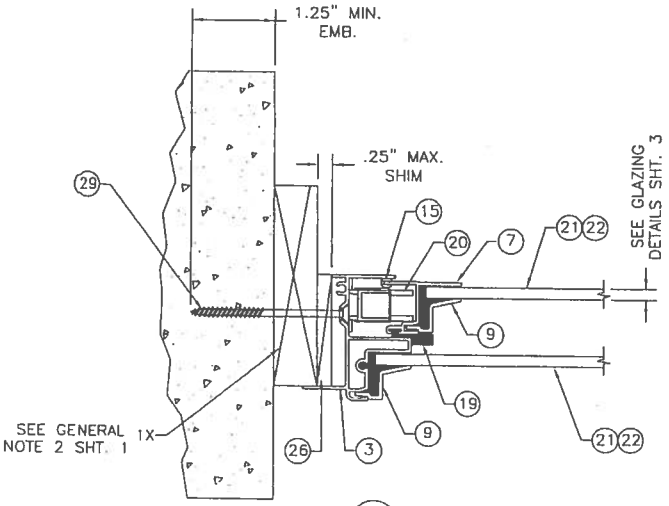

1/3 HORIZONTAL CROSS SECTION W/1X BUCK

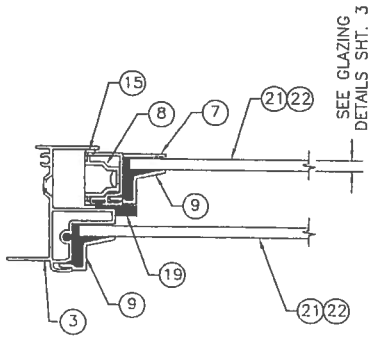

1/3 HORIZONTAL CROSS SECTION SHOWING SASH CAM MASONRY & BUCK NOT SHOWN

NOTES:

1. THE MAIN FRAME HEAD, SIDES AND SILL ARE CONNECTED TOGETHER AT EACH CORNER WITH (2) ITEM #11, A #8 x 3/4" PHILLIPS PAN HEAD SCREW. THE SCREWS RUN FROM THE HEAD DOWN INTO THE SIDES AND FROM THE SILL UP INTO THE SIDES.
2. THE FIXED MEETING RAIL IS SECURED TO THE SIDES WITH (2) EACH SIDE ITEM #12, A #8 x 1 1/4" PHILLIPS PAN HEAD SCREW.
3. THE SASH CORNERS ARE CONNECTED TOGETHER WITH (2) EACH CORNER ITEM #13, A #6 x 3/4" PHILLIPS PAN HEAD SCREW.

Approved as complying with the Florida Building Code
Date 03/04/04
NOA# 03-1215.02
Miami Dade Product Control Division
By

Product Approval Documents Prepared By:
BUILDING CONSULTANTS, INC.
P.O. Box 230 Valrico FL. 33595
Phone No. 813.653.9197
Florida Board of Professional Engineers
Certificate of Authorization No. 9813
Wendell Hall, P.E. No. 54158
2/10/04

PRODUCT: NON-IMPACT SINGLE HUNG WINDOWS RECTANGLE CIRCLE TOP & OREIAL

PART OR ASSEMBLY: HORIZONTAL CROSS SECTIONS & GLAZING DETAILS

NO	DATE	REVISIONS	BY
2	2/10/04	CORRECT DP TABLE	RW
1	01/04	REVISED PER DADE LETTER	WH

DATE: 10/27/03
SCALE: N.T.S.
DWG. BY: TJH
CHK. BY: RW
DRAWING NO. S-2422
SHEET 3 OF 5

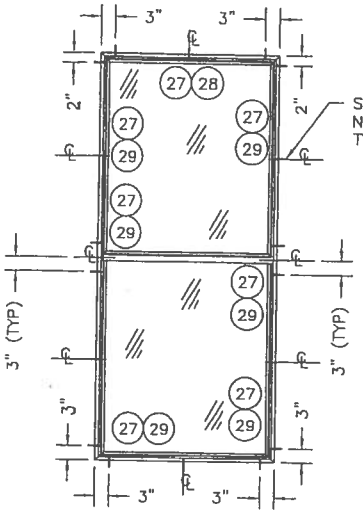

37" x 84" SINGLE HUNG WINDOW

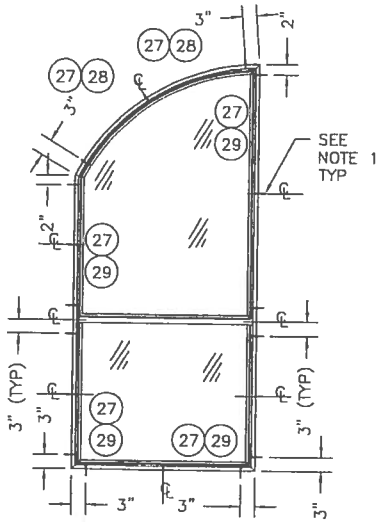

37" x 84" SINGLE HUNG WINDOW
HALF CIRCLE TOP ORIEL

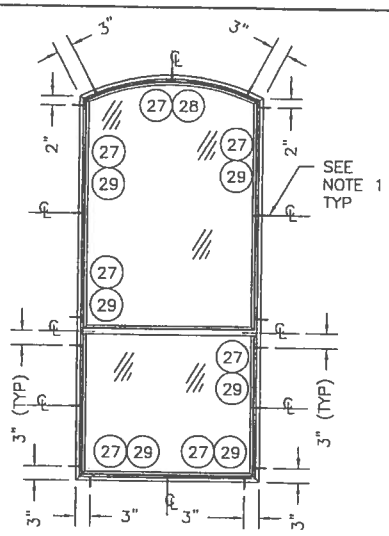

37" x 84" SINGLE HUNG WINDOW
CIRCLE TOP ORIEL

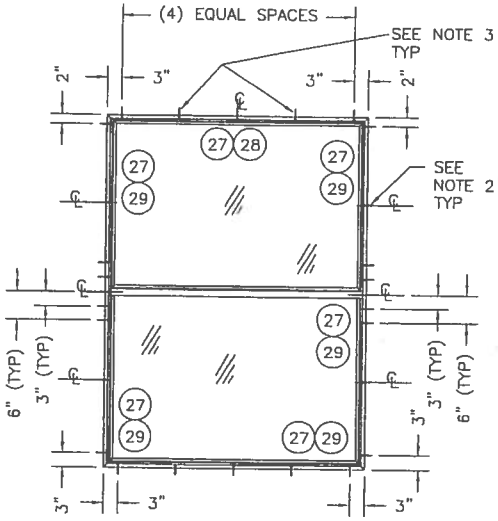

53" x 73" SINGLE HUNG WINDOW

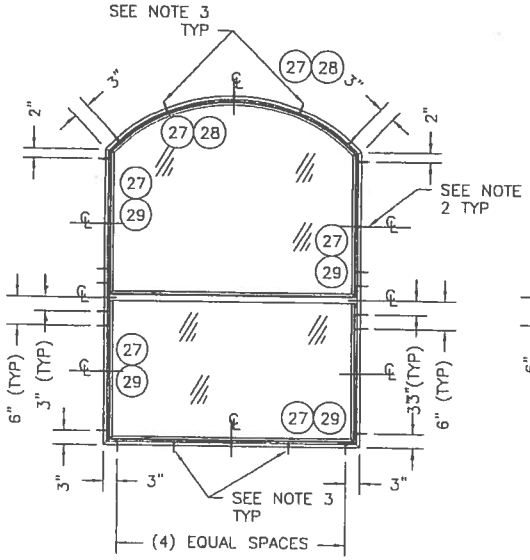

53" x 73" SINGLE HUNG WINDOW
CIRCLE TOP ORIEL

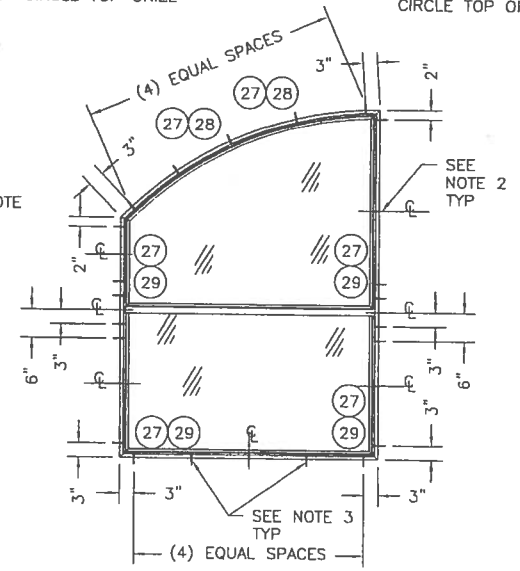

53" x 73" SINGLE HUNG WINDOW
HALF CIRCLE TOP ORIEL

NOTES:

1. FOR UNITS SMALLER THAN 30"x60" DO NOT INSTALL ANCHOR AT CENTER LOCATION.
2. FOR UNITS SMALLER THAN 53"x60" OR SMALLER THAN 30"x66" DO NOT INSTALL ANCHOR AT CENTER LOCATION.
3. FOR UNITS SMALLER THAN 36"x66" DO NOT INSTALL ANCHORS AT EITHER SIDE OF CENTER ANCHOR AT HEAD AND SILL JAMBS.

Approved as complying with the Florida Building Code
Date 03/04/04
NOA# 03-1215.02
Miami-Dade Product Control
Division
By

Product Approval Documents Prepared By:
BUILDING CONSULTANTS, INC.
P.O. Box 230 Valrico FL 33595
Phone No: 813 659.9197
Florida Board of Professional Engineers
Certificate of Authorization No. 9813
2/10/04
Wendell Hopsy, P.E. No. 54158

PRODUCT: NON-IMPACT SINGLE HUNG WINDOW RECTANGLE, CIRCLE TOP & ORIEL

PART OR ASSEMBLY: ANCHORING LOCATIONS

NO	DATE	REVISIONS	BY
2	2/10/04	CORRECT OP TABLE	RW
1	01/04	REVISED PER DADE LETTER	WH

DATE: 10/27/03
SCALE: N.T.S.
DWG. BY: TJH
CHK. BY: RW
DRAWING NO: S-2422
SHEET 4 of 5

BILL OF MATERIALS		
ITEM	DESCRIPTION	MATERIAL
1	EXTRUDED ALUMINUM SINGLE HUNG 1/2" HEAD #CM-18501 BY MI METALS	ALUM.
2	EXTRUDED ALUMINUM SINGLE HUNG 1/2" SILL #CM-18502 BY MI METALS	ALUM.
3	EXTRUDED ALUMINUM SINGLE HUNG 1/2" JAMB #CM-18503 BY MI METALS	ALUM.
4	EXTRUDED ALUMINUM SINGLE HUNG FIXED MEETING RAIL #CM-18504 BY MI METALS	ALUM.
5	EXTRUDED ALUMINUM SINGLE HUNG SASH LOCK RAIL #CM-18505 BY MI METALS	ALUM.
6	EXTRUDED ALUMINUM SINGLE HUNG SASH BOTTOM RAIL #CM-18506 BY MI METALS	ALUM.
7	EXTRUDED ALUMINUM SINGLE HUNG SASH STILE #CM-18507 BY MI METALS	ALUM.
8	SASH CAM #I-185 BY BSI	–
9	GLAZING BEAD #V-185 BY MI PLASTICS	–
10	LOCK #30240-402 BY REFLECTOLITE	–
11	MAIN FRAME SCREW #8 x 3/4" PHHILLIPS PAN HEAD	STEEL
12	MEETING RAIL SCREW #8 x 1 1/4" PHILLIIPS PAN HEAD	STEEL
13	SASH SCREW #6 x 3/4" PHILLIPS PAN HEAD	STEEL
14	LOCK SCREW #8 x 5/8" PHILLIPS FLAT HEAD -PTD	STEEL
15	SASH GUIDE #80-02-8207 BY PLASTICS, AZ	–
16	WINDOW SCREEN	–
17	FIN WEATHERSTRIPPING .187" x .250" BY AMESBURY	–
18	BULB SEAL #32002 BY AMESBURY	–
19	DUST PLUG 5/8" x 7/8" x .25" BY AMESBURY	–
20	5/8" BLOCK & TACKLE 150 SERIES BY BSI	–
21	GLASS "A" SGL GLAZED 3/16" ANN. BY GUARDIAN	–
22	GLASS "B" SGL GLAZED 1/8" TEMP. BY GUARDIAN	–
23	BACKBEDDING #SM-2100 BY SCHNEE MOREHEAD	SILICONE
24	BACKBEDDING PURFECTGLAZE-H (HOTMELT)	–
25	GLASS SHIM 1/8" x 1/4" x 1" BY SECON	–
26	1/4" MAX SHIM	–
27	#12 X 2" PHILLIPS FLAT HEAD SHEET METAL SCREW	STEEL
28	3/16" x 3 1/4" ELCO TAPCON ANCHOR	STEEL
29	3/16 x 2 3/4" ELCO TAPCON ANCHOR	STEEL

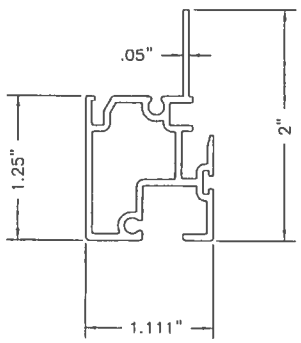

④ FIXED MEETING RAIL

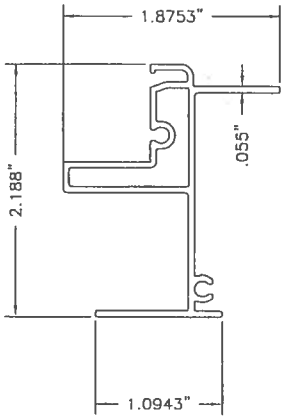

③ JAMB-FLANGE

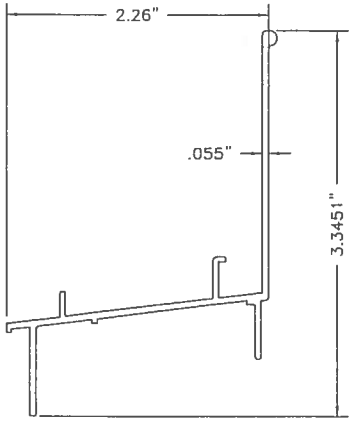

② SILL FIN

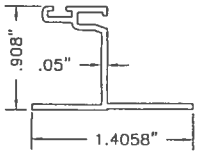

⑦ SASH STILE

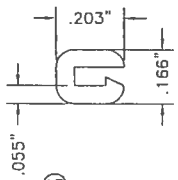

⑮ SASH GUIDE

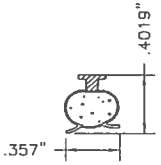

⑱ BULB SEAL

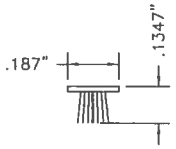

⑰ FIN WEATHERSTRIPPING

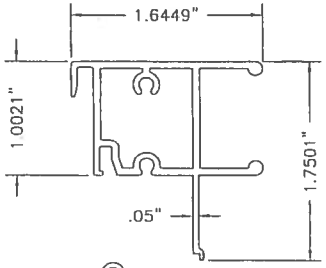

⑤ LOCK RAIL

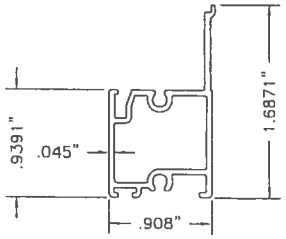

⑥ SASH BOTTOM RAIL

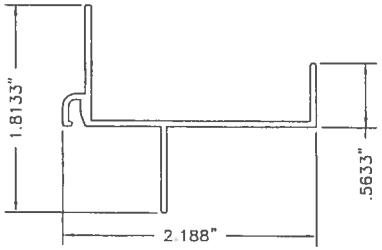

① HEAD FLANGE

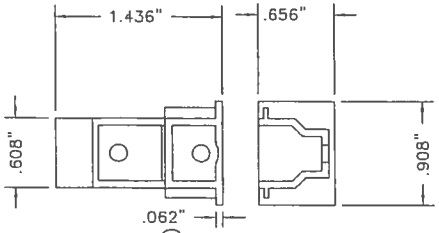

⑧ SASH CAM

Approved as complying with the Florida Building Code
Date 03/04/04
NOA# 03-1215.02
Miami Dade Product Control Division
By

Product Approval Documents Prepared By:
RW BUILDING CONSULTANTS, INC.
P.O. Box 230 Valrico, FL 33595
Phone No.: 813.659.9197
Florida Board of Professional Engineers
Certificate Of Authorization No. 9813
Wendell Hong, P.E. No. 53158
2/10/04

PRODUCT: NON-IMPACT SINGLE HUNG WINDOWS RECTANGLE, CIRCLE TOP & OREIAL

PART OR ASSEMBLY: BILL OF MATERIALS & UNIT COMPONENTS

NO.	DATE	REVISIONS	BY
2	2/10/04	CORRECT DP TABLE	RW
1	01/04	REVISED PER DADE LETTER	WH

DATE: 10/27/03
SCALE: N.T.S.
DWG. BY: TJH
CHK. BY: RW
DRAWING NO.: S-2422
SHEET 5 OF 5

MIAMI-DADE

BUILDING CODE COMPLIANCE OFFICE (BCCO)
PRODUCT CONTROL DIVISION

MIAMI-DADE COUNTY, FLORIDA
METRO-DADE FLAGLER BUILDING
140 WEST FLAGLER STREET, SUITE 1603
MIAMI, FLORIDA 33130-1563
(305) 375-2901 FAX (305) 375-2908

NOTICE OF ACCEPTANCE (NOA)

Mi Home Products, Inc.
650 West Market Street
Gratz, PA 17030

SCOPE:
This NOA is being issued under the applicable rules and regulations governing the use of construction materials. The documentation submitted has been reviewed by Miami-Dade County Product Control Division and accepted by the Board of Rules and Appeals (BORA) to be used in Miami Dade County and other areas where allowed by the Authority Having Jurisdiction (AHJ).

This NOA shall not be valid after the expiration date stated below. The Miami-Dade County Product Control Division (In Miami Dade County) and/or the AHJ (in areas other than Miami Dade County) reserve the right to have this product or material tested for quality assurance purposes. If this product or material fails to perform in the accepted manner, the manufacturer will incur the expense of such testing and the AHJ may immediately revoke, modify, or suspend the use of such product or material within their jurisdiction. BORA reserves the right to revoke this acceptance, if it is determined by Miami-Dade County Product Control Division that this product or material fails to meet the requirements of the applicable building code.

This product is approved as described herein, and has been designed to comply with the Florida Building Code, including the High Velocity Hurricane Zone.
DESCRIPTION: Series "Betterbilt D485/D3485" Aluminum Sliding Patio Door
APPROVAL DOCUMENT: Drawing No. **S-2425,** titled "Non-Impact Aluminum Sliding Patio Door Up to 6'0 x 6'8", sheets 1 through 5 of 5, prepared by R.W. Building Consultants, Inc., dated 12/18/03, signed and sealed by Lyndon F. Schmidt, P.E., bearing the Miami-Dade County Product Control Approval stamp with the Notice of Acceptance number and approval date by the Miami-Dade County Product Control Division.
MISSILE IMPACT RATING: None
LABELING: Each unit shall bear a permanent label with the manufacturer's name or logo, city, state and following statement: "Miami-Dade County Product Control Approved", unless otherwise noted herein.
RENEWAL of this NOA shall be considered after a renewal application has been filed and there has been no change in the applicable building code negatively affecting the performance of this product.
TERMINATION of this NOA will occur after the expiration date or if there has been a revision or change in the materials, use, and/or manufacture of the product or process. Misuse of this NOA as an endorsement of any product, for sales, advertising or any other purposes shall automatically terminate this NOA. Failure to comply with any section of this NOA shall be cause for termination and removal of NOA.
ADVERTISEMENT: The NOA number preceded by the words Miami-Dade County, Florida, and followed by the expiration date may be displayed in advertising literature. If any portion of the NOA is displayed, then it shall be done in its entirety.
INSPECTION: A copy of this entire NOA shall be provided to the user by the manufacturer or its distributors and shall be available for inspection at the job site at the request of the Building Official.
This NOA consists of this page 1 and evidence page E-1, as well as approval document mentioned above.
The submitted documentation was reviewed by **Theodore Berman, P.E.**

2/13/2004

PRODUCT CONTROL ACCEPTED

Mi Home Products, Inc.

NOTICE OF ACCEPTANCE: EVIDENCE SUBMITTED

A. DRAWINGS

1. Manufacturer's die drawings and sections.

Drawing No. **S-2425,** titled "Non-Impact Aluminum Sliding Patio Door Up to 6'0 x 6'8", sheets 1 through 5 of 5, prepared by R.W. Building Consultants, Inc., dated 12/18/03, signed and sealed by Lyndon F. Schmidt, P.E.

B. TESTS

1. Test reports on 1) Air Infiltration Test, per FBC, TAS 202-94
   2) Uniform Static Air Pressure Test, Loading per FBC, TAS 202-94
   3) Water Resistance Test, per FBC, TAS 202-94
   4) Forced Entry Test, per FBC 2411.3.2.1 and TAS 202-94

   along with marked-up drawings and installation diagram of an aluminum patio door, prepared by Architectural Testing, Test Report No. **ATI-03064** dated 12/17/03, signed and sealed by Steven M. Urich, P.E.

C. CALCULATIONS

1. Anchor Calculations, ASTM-E1300-98, and structural analysis, prepared by R.W. Building Consultants, Inc., dated 12/22/03, signed and sealed by Lyndon Schmidt, P.E.
2. Revised Anchor Calculations and structural analysis, prepared by R.W. Building Consultants, Inc., dated 02/10/03, signed and sealed by Lyndon Schmidt, P.E.

D. QUALITY ASSURANCE

1. Miami Dade Building Code Compliance Office (BCCO).

E. MATERIAL CERTIFICATIONS

1. None.

F. STATEMENTS

1. Statement letter of compliance and of no financial interest, dated 12/18/03, signed and sealed by Lyndon F. Schmidt, P.E.
2. Letter from MI Home Products, Inc., dated 11/08/03, stating that they have no financial interest with the laboratory that performed the testing of their products, singed by Stu White.

G. OTHER

1. Letter from the consultant stating that the product is in compliance with the Florida Building Code.

Theodore Berman, P.E.
Deputy Director, Product Control Division
NOA No 03-1224.01
Expiration Date: March 04, 2009
Approval Date: March 04, 2004

MI HOME PRODUCTS

650 WEST MARKET STREET • GRATZ, PA • 17030-0370

SERIES BETTERBILT D485/D3485 ALUMINUM SLIDING PATIO DOOR

GENERAL NOTES:

1. THIS PRODUCT IS DESIGNED TO COMPLY WITH THE HVHZ FLORIDA BUILDING CODE.
2. WOOD BUCKS MUST BE ANCHORED PROPERLY TO TRANSFER LOADS TO STRUCTURE AND TO BE REVIEWED BY BUILDING OFFICIAL.
3. PRODUCT ANCHORS SHALL BE AS LISTED AND SPACED AS SHOWN ON DETAILS. ANCHOR EMBEDMENT TO BASE MATERIAL SHALL BE BEYOND WALL DRESSING OR STUCCO.
4. FOR DESIGN PRESSURE RATING SEE TABLE THIS SHEET.
5. INSTALLATION OF THIS SYSTEM IN HVHZ AREA REQUIRES THE USE OF APPROVED SHUTTER/EXTERNAL PROTECTION DEVICE COMPLYING WITH HVHZ REQUIREMENTS; INSTALLATION OF THIS SYSTEM OUTSIDE OF HVHZ SHALL MEET THE APPLICABLE CODE REQUIREMENTS FOR WINDBORNE DEBRIS PROTECTION.
6. THIS PRODUCT MEETS WATER REQUIREMENTS FOR HIGH VELOCITY HURRICANE ZONES.

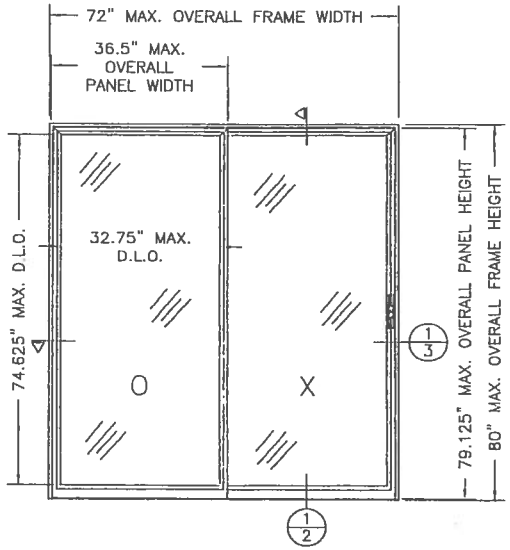

6'0 x 6'8 PATIO DOOR

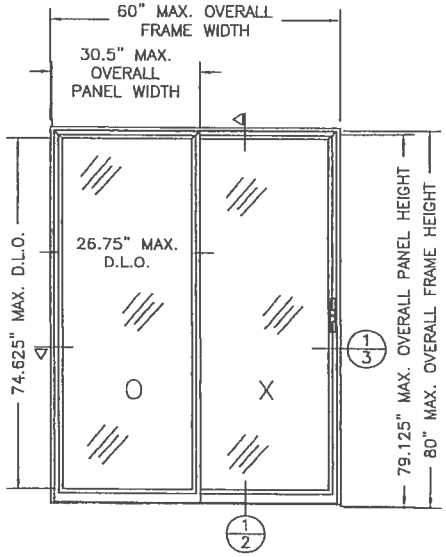

5'0 x 6'8 PATIO DOOR

ALL ELEVATIONS ARE VIEWED FROM EXTERIOR

TABLE OF CONTENTS

SHEET #	DESCRIPTION
1	GENERAL NOTES & TYPICAL ELEVATIONS
2	VERTICAL CROSS SECTIONS & CONSTRUCTION NOTES
3	HORIZONTAL CROSS SECTIONS
4	ANCHORING LOCATIONS & GLAZING DETAIL
5	BILL OF MATERIALS & UNIT COMPONENTS

DESIGN PRESSURE RATING	
+57.52 PSF	-74.0 PSF

Approved as complying with the Florida Building Code
Date 03/04/04
NOA# 03-1224.01
Miami Dade Product Control Division
By

Product Approval Documents Prepared By:
RW BUILDING CONSULTANTS, INC.
P.O. Box 230 Venice FL 33595
Phone No.: 813.659.8197
Florida Board of Professional Engineers
Certificate Of Authorization No. 8813
Lyndon F. Schmidt, P.E. NO. 43409 12/22/03

PRODUCT: NON-IMPACT ALUMINUM SLIDING PATIO DOOR UP TO 6'0 x 6'8

PART OR ASSEMBLY: GENERAL NOTES & TYPICAL ELEVATIONS

NO.	DATE	BY

REVISIONS

DATE: 12/18/03
SCALE: N.T.S.
DWG. BY: TJH
CHK. BY: RW
DRAWING NO.: S-2425
SHEET 1 OF 5

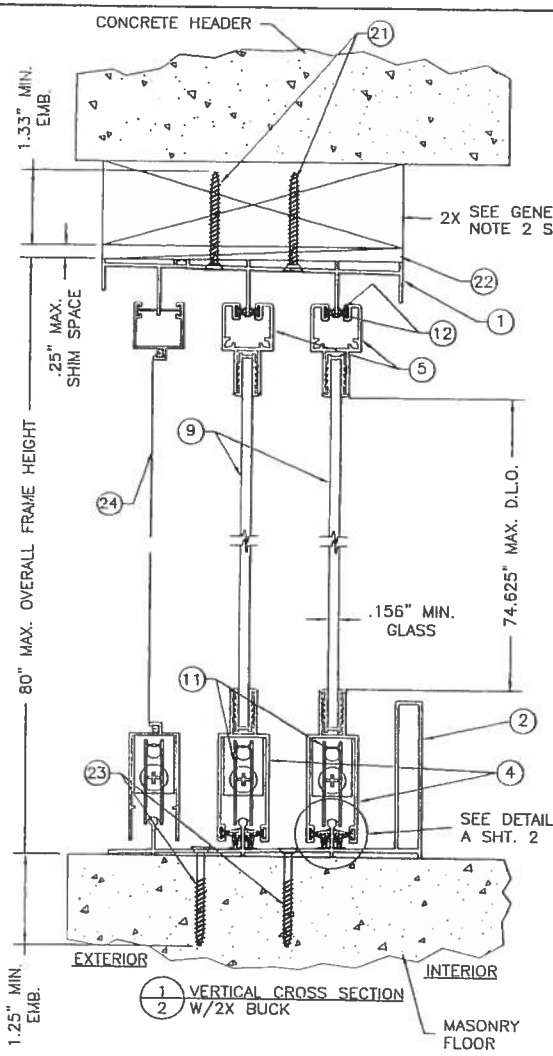

1/2 VERTICAL CROSS SECTION W/2X BUCK

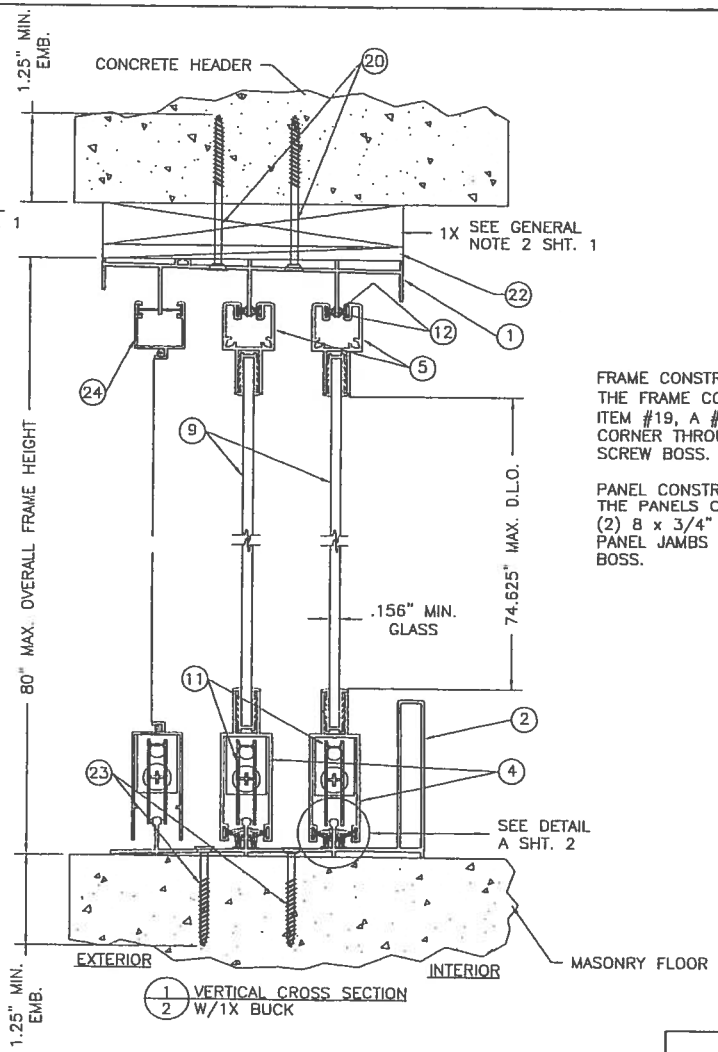

1/2 VERTICAL CROSS SECTION W/1X BUCK

FRAME CONSTRUCTION NOTE:
THE FRAME CORNERS ARE BUTTED AND SECURED WITH (2) ITEM #19, A #8 x 5/8" FLAT HEAD SCREW, AT EACH CORNER THROUGH THE HEAD AND SILL INTO THE JAMB SCREW BOSS.

PANEL CONSTRUCTION NOTE:
THE PANELS CORNERS ARE BUTTED AND SECURED WITH (2) 8 x 3/4" PAN HEAD SCREWS LOCATED THROUGH THE PANEL JAMBS AND INTO THE PANEL HEAD AND SILL SCREW BOSS.

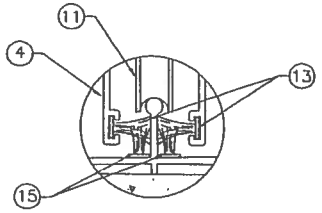

DETAIL A WEATHERSTRIP AT PANEL BOTTOM, TYP.

Approved as complying with the Florida Building Code
Date 09/04/09
NOA# 09-1224.01
Miami-Dade Product Control Division
By

Product Approval Documents Prepared By:
BUILDING CONSULTANTS, INC.
P.O. Box 230 Valrico FL. 33595
Phone No.: 813.659.9197
Florida Board of Professional Engineers
Certificate Of Authorization No. 8813
12/22/03
Lyndon F. Schmidt, P.E. NO. 43409

PRODUCT: NON-IMPACT ALUMINUM SLIDING PATIO DOOR UP TO 6'0 x 6'8

PART OR ASSEMBLY: VERTICAL CROSS SECTIONS & CONSTRUCTION NOTES

NO.	DATE	REVISIONS	BY

DATE: 12/18/03
SCALE: N.T.S.
DWG. BY: TJH
CHK. BY: RW
DRAWING NO.: S-2425
SHEET 2 OF 5

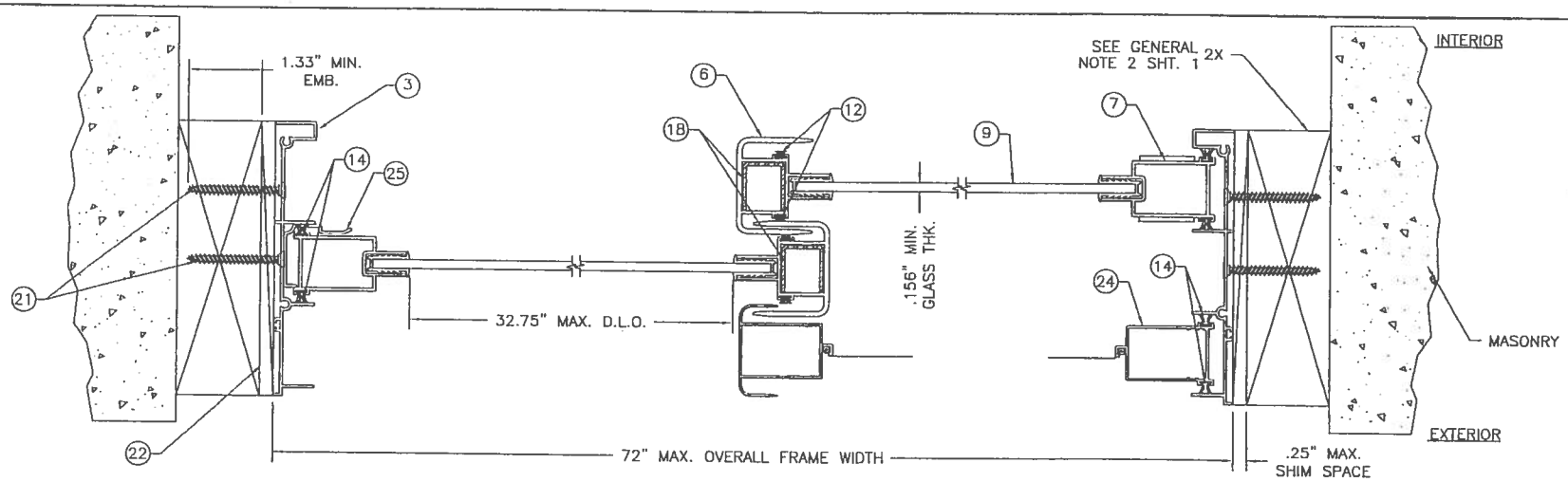

1/3 HORIZONTAL CROSS SECTION W/2X BUCK

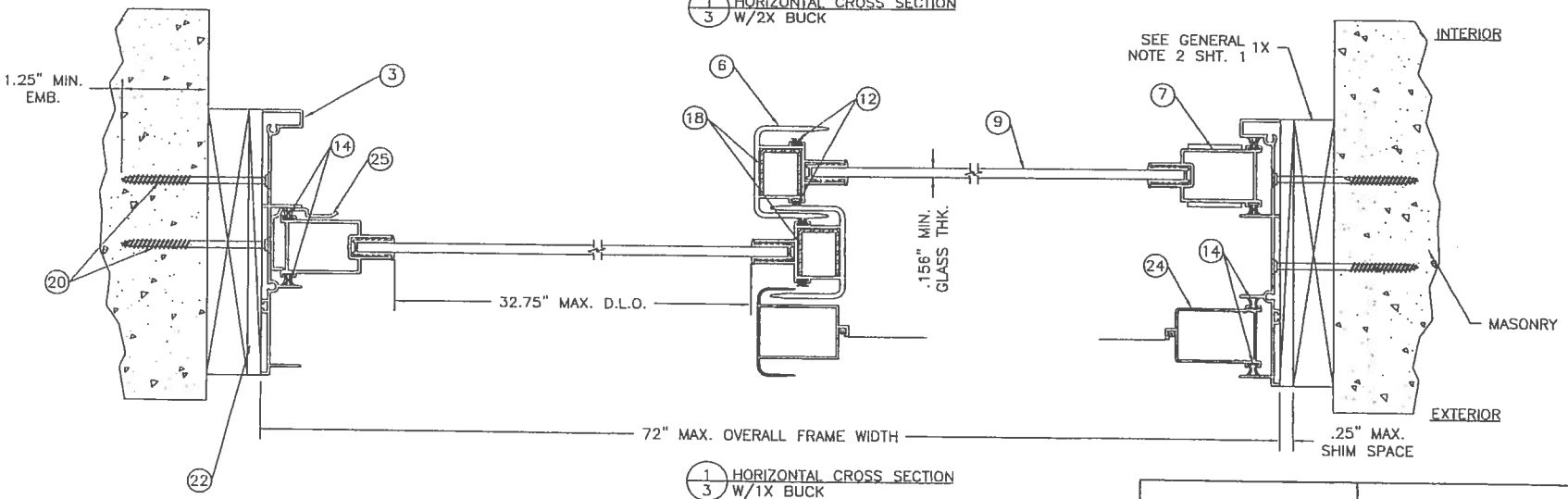

1/3 HORIZONTAL CROSS SECTION W/1X BUCK

Approved as complying with the Florida Building Code
Date 03/04/04
NOA# 03-1224.01
Miami Dade Product Control Division
By

Product Approval Documents Prepared By:
BUILDING CONSULTANTS, INC.
P.O. Box 230 Valrico FL 33595
Phone No.: 813.659.9197
Florida Board of Professional Engineers
Certificate Of Authorization No. 9813
12/22/03
Lyndon F. Schmidt, P.E. NO. 43409

PRODUCT: NON-IMPACT ALUMINUM SLIDING PATIO DOOR UP TO 6'0" x 6'8"

PART OR ASSEMBLY: HORIZONTAL CROSS SECTIONS

NO.	DATE	REVISIONS	BY

DATE: 12/18/03
SCALE: N.T.S.
DWG. BY: TJH
CHK. BY: RW
DRAWING NO.: S-2425
SHEET 3 OF 5

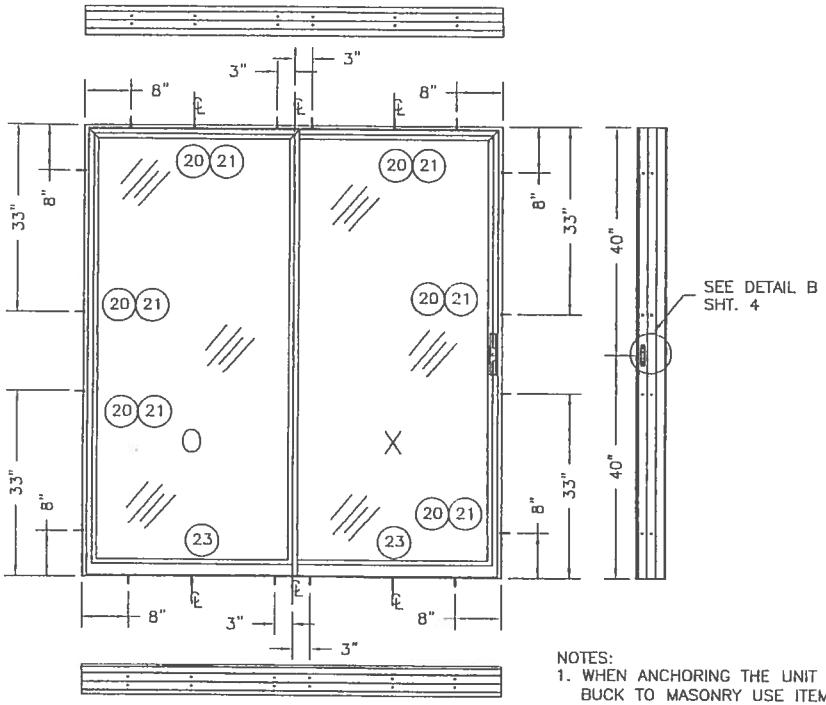

6'0 x 6'8 PATIO DOOR
SEE NOTES SHT. 4

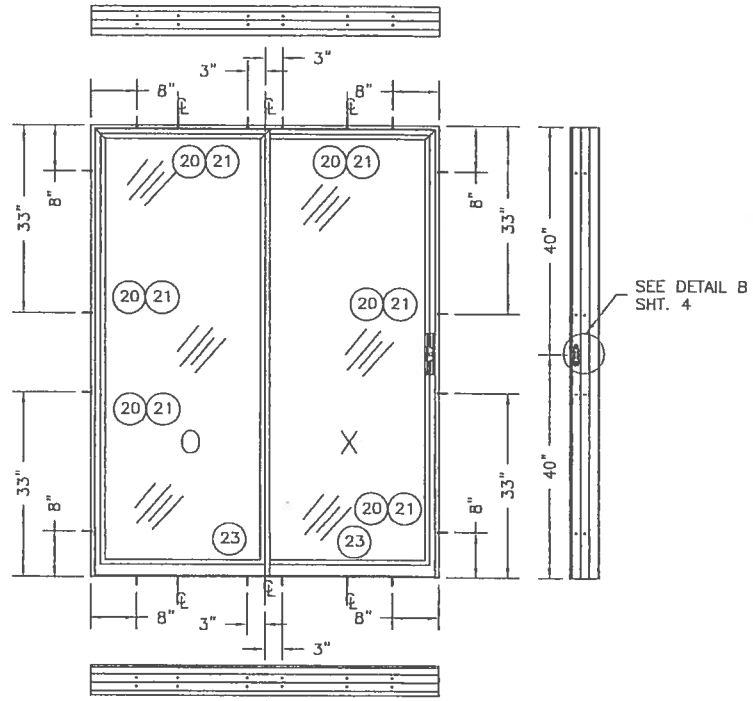

5'0 x 6'8 PATIO DOOR
SEE NOTES SHT. 4

NOTES:

1. WHEN ANCHORING THE UNIT TO A 2X BUCK TO MASONRY USE ITEM #21, A #10 x 1 3/4" PHILLIPS FLAT HEAD SHEET METAL SCREW AT THE HEAD AND SIDES.
2. WHEN ANCHORING THE UNIT THROUGH A 1X BUCK INTO MASONRY USE ITEM #20, A 3/16" x 2 3/4" TAPCON ANCHOR AT THE HEAD AND SIDES.
3. USE (2) ANCHORS PER EACH ANCHORING LOCATION SHOWN ABOVE.

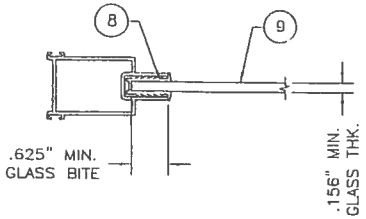

5/32" TEMPERED GLASS
GLAZING DETAIL

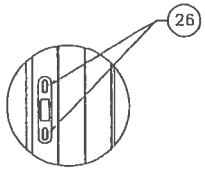

DETAIL B
JAMB KEEPER ATTACHMENT

Approved as complying with the Florida Building Code
Date 09/04/04
NOA# 03-1224.01
Miami Dade Product Control Division
By

Product Approval Documents Prepared By:
RW BUILDING CONSULTANTS, INC.
P.O. Box 230 Valrico FL 33595
Phone No.: 813.658.9197
Florida Board of Professional Engineers
Certificate Of Authorization No. 9813
12/22/03
Lynden F. Schmidt, P.E. NO. 43409

PRODUCT: NON-IMPACT ALUMINUM SLIDING PATIO DOOR UP TO 6'0 x 6'8

PART OR ASSEMBLY: ANCHORING LOCATIONS & GLAZING DETAILS

NO.	DATE	REVISIONS	BY

DATE: 12/18/03
SCALE: N.T.S.
DWG. BY: TJH
CHK. BY: RW
DRAWING NO.: S-2425
SHEET 4 OF 5

BILL OF MATERIALS		
ITEM	DESCRIPTION	MATERIAL
1	EXTRUDED ALUM. MAIN FRAME HEAD #4208 BY MI METALS	ALUM.
2	EXTRUDED ALUM. MAIN FRAME SILL #4235 BY MI METALS	ALUM.
3	EXTRUDED ALUM. MAIN FRAME JAMB #4210 BY MI METALS	–
4	EXTRUDED ALUM. PANEL SILL #4200 MI METALS	ALUM.
5	EXTRUDED ALUM. PANEL HEAD #4202 BY MI METALS	ALUM.
6	EXTRUDED ALUM. PANEL INTERLOCK #4204 BY MI METALS	ALUM.
7	EXTRUDED ALUM. PANEL LOCK JAMB #4206 BY MI METALS	ALUM.
8	GLAZING CHANNEL #80-02-4202 BY MI PLASTICS	V-FLEX
9	GLAZING 5/32" TEMPERED GLASS	GLASS
10	MORTISE HANDLE SET #99-04-150 BY THRUTH HARDWARE	STEEL
11	TANDEM PANEL ROLLER #99-17-195 BY ULTRA	STEEL
12	CENTER FIN SEAL .180 x .250 PANEL HEAD & INTERLOCK BY AMESBURY	SYN. PILE
13	SIDE FIN SEAL .180 x .350 PANEL SILL BY AMESBURY	SYN. PILE
14	CENTER FIN SEAL .187 x .290 PANEL JAMB BY AMESBURY	SYN. PILE
15	NO FIN SEAL .270 x .290 SILL BY AMESBURY	SYN. PILE
16	#6 x 3/4" SQ. DR. SCREW PANEL HEAD TO JAMB	STEEL
17	1/4"-20 x 3/4" SQ. DR. SCREW FOR PANEL ASSEMBLY	STEEL
18	INTERLOCK REINFORCEMENT #99-17-525 BY MAGNOLIA METALS	STEEL
19	#8 x 5/8" FLAT HEAD SCREW FRAME CORNERS	STEEL
20	3/16" x 2 3/4" TAPCON ANCHOR	STEEL
21	#10 x 1 3/4" SHEET METAL SCREW	STEEL
22	1/4" MAX. SHIM MATERIAL	–
23	3/16" x 1 3/4" TAPCON ANCHOR	STEEL
24	ROLLING SCREEN DOOR ASSEMBLY	–
25	EXTRUDED ALUM. PANEL RETAINER #4222 BY MI METALS	ALUM.
26	#8 x 2" PHILLIPS PAN HEAD SHEET METAL SCREW	STEEL

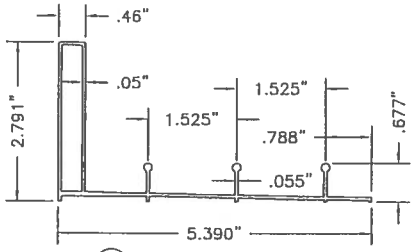

(2) MAIN FRAME SILL
6063-T5 ALUM. .050" MIN.
#4235 BY MI METALS

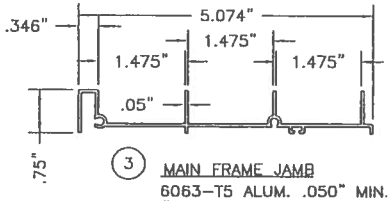

(3) MAIN FRAME JAMB
6063-T5 ALUM. .050" MIN.
#4210 BY MI METALS

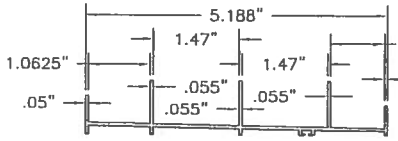

(1) MAIN FRAME HEAD
6063-T5 ALUM. .050" MIN.
#4208 BY MI METALS

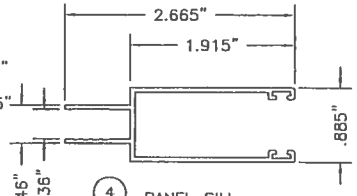

(4) PANEL SILL
6063-T5 ALUM. .055" MIN.
#4200 BY MI METALS

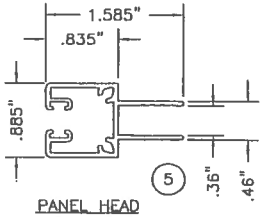

(5) PANEL HEAD
6063-T5 ALUM. .055" MIN.
#4202 BY MI METALS

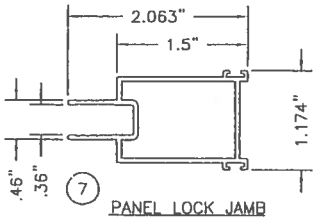

(7) PANEL LOCK JAMB
6063-T5 ALUM. .055" MIN.
#4206 BY MI METALS

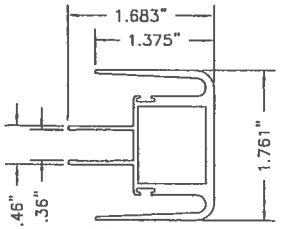

(6) PANEL INTERLOCK
6005-T5 ALUM. .055" MIN.
#4204 BY MI METALS

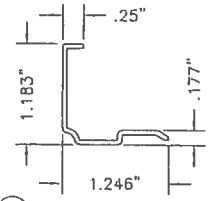

(25) PANEL RETAINER
6063-T5 ALUM. .055" MIN.
#4222 BY MI METALS

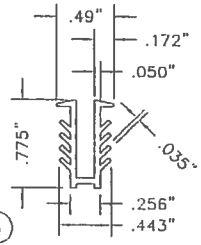

(8) GLAZING CHANNEL
V-FLEX
#80-02-4202
BY MI PLASTICS

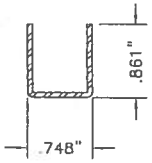

(18) INTERLOCK REINFORCEMENT
.060" THK. GALVANIZED STEEL
#99-17-525 BY MAGNOLIA METALS

Approved as complying with the Florida Building Code
Date 05/04/04
NOAB 03-1224.01
Miami-Dade County Building Code Compliance Office
By

Product Approval Documents Prepared By:
RW BUILDING CONSULTANTS, INC.
P.O. Box 230 Valrico FL 33595
Phone No.: 813.659.9197
Florida Board of Professional Engineers
Certificate Of Authorization No. 9813
12/22/03
Lyndon F. Schmidt, P.E. NO. 43409

PRODUCT: NON-IMPACT ALUMINUM SLIDING PATIO DOOR UP TO 6'0 x 6'8

PART OR ASSEMBLY: BILL OF MATERIALS & UNIT COMPONENTS

NO.	DATE	BY

REVISIONS

DATE: 12/18/03
SCALE: N.T.S.
DWG. BY: TJH
CHK. BY: RW
DRAWING NO.: S-2425
SHEET 5 OF 5

MIAMI-DADE

BUILDING CODE COMPLIANCE OFFICE (BCCO)
PRODUCT CONTROL DIVISION

MIAMI-DADE COUNTY, FLORIDA
METRO-DADE FLAGLER BUILDING
140 WEST FLAGLER STREET, SUITE 1603
MIAMI, FLORIDA 33130-1563
(305) 375-2901 FAX (305) 375-2908

NOTICE OF ACCEPTANCE (NOA)

Clopay Building Products Co.
8585 Duke Blvd.
Mason, OH 45040

SCOPE: This NOA is being issued under the applicable rules and regulations governing the use of construction materials. The documentation submitted has been reviewed by Miami-Dade County Product Control Division and accepted by the Board of Rules and Appeals (BORA) to be used in Miami Dade County and other areas where allowed by the Authority Having Jurisdiction (AHJ).

This NOA shall not be valid after the expiration date stated below. The Miami-Dade County Product Control Division (In Miami Dade County) and/or the AHJ (in areas other than Miami Dade County) reserve the right to have this product or material tested for quality assurance purposes. If this product or material fails to perform in the accepted manner, the manufacturer will incur the expense of such testing and the AHJ may immediately revoke, modify, or suspend the use of such product or material within their jurisdiction. BORA reserves the right to revoke this acceptance, if it is determined by Miami-Dade County Product Control Division that this product or material fails to meet the requirements of the applicable building code. This product is approved as described herein, and has been designed to comply with the Florida Building Code including the High Velocity Hurricane Zone.

DESCRIPTION: Sectional Garage Door 16'- 2" Wide.

APPROVAL DOCUMENT: Drawing No. 101300, titled "Double Car Hurricane Pan Door", dated 02/15/95 with last revision on 01/06/04, sheets 1 and 2 of 2, prepared by Clopay Building Products Co, signed and sealed by M. W. Westerfield, P.E., bearing the Miami-Dade County Product Control Revision stamp with the Notice of Acceptance number and expiration date by the Miami-Dade County Product Control Division.

MISSILE IMPACT RATING: Large and Small Missile Impact

LABELING: Each unit shall bear a permanent label with the manufacturer's name or logo, city, state and following statement: "Miami-Dade County Product Control Approved", unless otherwise noted herein.

RENEWAL of this NOA shall be considered after a renewal application has been filed and there has been no change in the applicable building code negatively affecting the performance of this product.

TERMINATION of this NOA will occur after the expiration date or if there has been a revision or change in the materials, use, and/or manufacture of the product or process. Misuse of this NOA as an endorsement of any product, for sales, advertising or any other purposes shall automatically terminate this NOA. Failure to comply with any section of this NOA shall be cause for termination and removal of NOA.

LIMITATION: This approval requires the manufacturer to do testing of all coils used to fabricate door panels under this Notice of Acceptance. A minimum of 2 specimens shall be cut from each coil and tensile tested according to ASTM E-8 by a Dade County approved laboratory selected and paid by the manufacturer. Every 3 months, four times a year, the manufacturer shall mail to this office: a copy of the tested reports with confirmation that the specimen were selected from coils at the manufacturer production facilities. And a notarized statement from the manufacturer that only coils with yield strength of 38000 psi or more shall be used to make door panels for Dade County under this Notice of Acceptance

ADVERTISEMENT: The NOA number preceded by the words Miami-Dade County, Florida, and followed by the expiration date may be displayed in advertising literature. If any portion of the NOA is displayed, then it shall be done in its entirety.

INSPECTION: A copy of this entire NOA shall be provided to the user by the manufacturer or its distributors and shall be available for inspection at the job site at the request of the Building Official.

This NOA renews NOA # 03-0829.05 and consists of this page, evidence page as well as the approval document mentioned above.

The submitted documentation was reviewed by **Candido E. Font PE.**

03/23/06

PRODUCT CONTROL ACCEPTED

Clopay Building Products Co.

NOTICE OF ACCEPTANCE: EVIDENCE PAGE

A. DRAWINGS

1. *Drawing prepared by Clopay Building Products Co., titled "Double Car Hurricane Pan Door", Drawing No. 101300, dated 02/15/95, with last revision on 01/06/2004, sheets 1 through 2 of 2, signed and sealed by M.W. Westerfield, PE.*

B. TESTS

1. *Test report of large missile impact test per PA 201 and cyclic wind pressure test per PA 203 of " Garage Door", prepared by Hurricane Engineering & Testing, Inc., report No. HETI 95-408, dated 01/25/95, signed and sealed by H. M. Medina, PE.*
2. *Test report of Uniform Static Air Pressure Test Per PA 202 on " Garage Door", prepared by Hurricane Engineering & Testing, Inc., report No. HETI 95-407, dated 01/24/95, signed and sealed by H. M. Medina, PE.*
3. *Test report of Forced Entry Resistance per section 3603.2(b)5 on "Garage Door" prepared by Hurricane Engineering Testing, Inc. report No. HETI 95-407f, dated 01/25/95, signed and sealed by H. M. Medina, PE.*

C. CALCULATIONS

1. *Calculations dated 01/20/95; pages 1 and 2, prepared by M. W. Westerfield, PE, signed and sealed by M. W. Westerfield, PE.*
2. *Calculations dated 02/24/95, page 1, prepared M.W. Westerfield, PE, signed and sealed by M.W. Westerfield, PE.*

D. MATERIAL CERTIFICATIONS

1. *Test report of Tensile Test per ASTM E 8, report No. HETI 94-T59, prepared by Hurricane Engineering & Testing, Inc., dated 02/06/95, signed and sealed by H.M. Medina, PE.*
2. *Test report of Salt Spray Test per ASTM D1654 & ASTM B117, report No. 9EM-1144, prepared by Q.C. Metallurgical, Inc., dated 06/03/99, signed and sealed by K. Grate.*

E. STATEMENTS.

1. *Affidavit of yield strength compliance prepared by R. D. Shifflett employed by Clopay Building Products Co., notarized on 01/11/2001 by B. H. Schuler.*

F. QUALITY ASSURANCE.

1. *Building Code Compliance Office.*

03/23/06

Candido F. Font, PE.
Senior Product Control Division
NOA No 05-1212.02
Expiration Date: March 26, 2007
Approval Date: March 23, 2006

5	8/25/2003	ADDED EXTEN
6	1/6/2004	JAMB ATTACHI

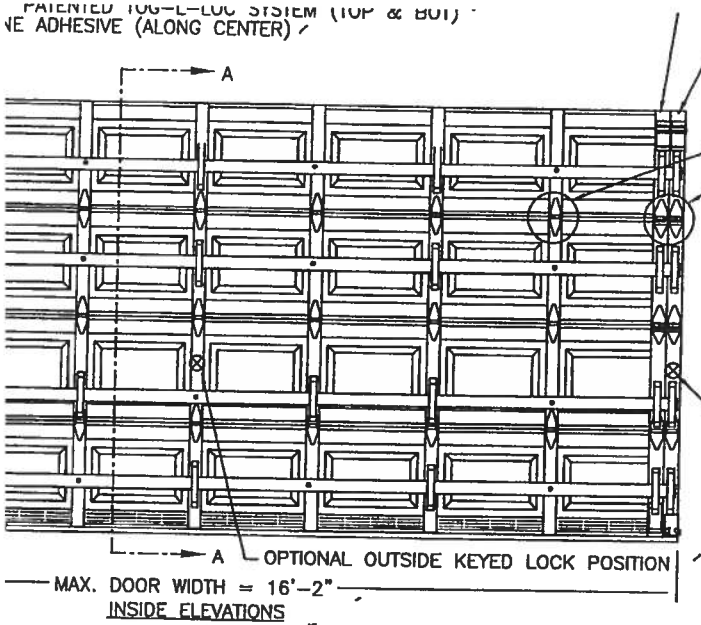

16 GA. PAINTED END STILES ATTACHED TO DOOR SKIN WITH PATENTED TOG-L-LOC SYSTEM (TOP, BOTTOM & CENTER).

VIEW "C"

VIEW "B"

LOCK POSITION (BOTH SIDES) TWO POINT LOCKING HAS BEEN TESTED PER REQUIREMENTS OF SECTION 12.1 OF TAS 202. LOCKS HAVE 5/8" MIN. ENGAGEMENT. DOOR TESTED FOR FORCED ENTRY WITH BOTH OUTSIDE KEYED LOCK AND INSIDE SLIDE BOLT LOCK OPTIONS (SEE LAYOUT OF EACH LOCK ON NEXT PAGE).

24 GA. DDS STEEL (MIN. YIELD STRENGTH: 38 KSI) EXTERIOR SKIN WITH G-40 GALVANIZING, BAKED-ON PRIMER AND A BAKED-ON POLYESTER PAINTED TOP COAT APPLIED TO BOTH SIDES OF STEEL SKIN. (ASTM No. A653).

SHIP LAP JOINTS.

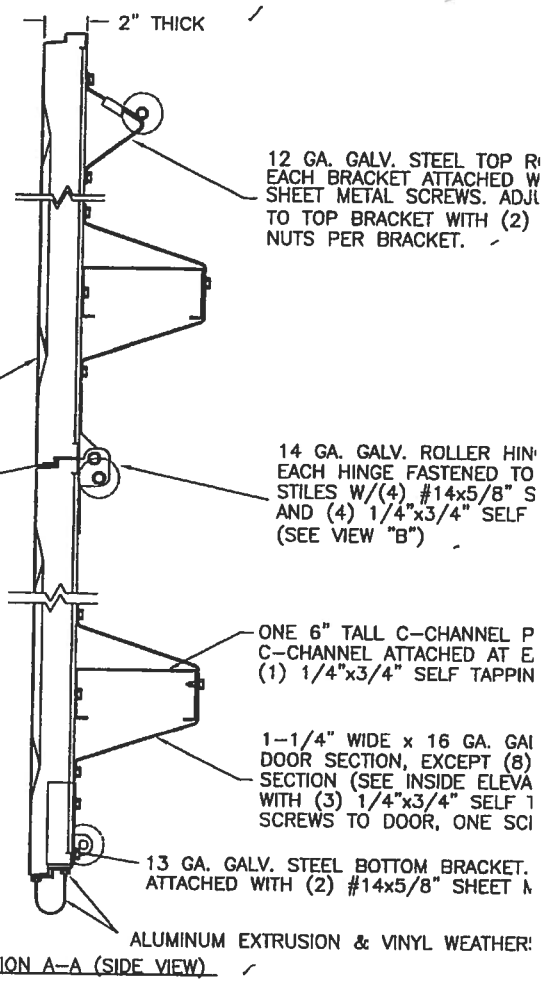

SECTION A-A (SIDE VIEW)

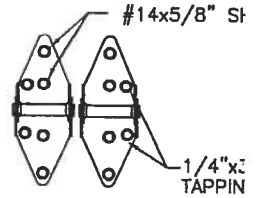

14 GA. END HINGES
VIEW "B"

TRACK CONFIGURATION
EXTENDED HEIGHT MODELS H93, H94
DOORS UP TO 12'0" HIGH

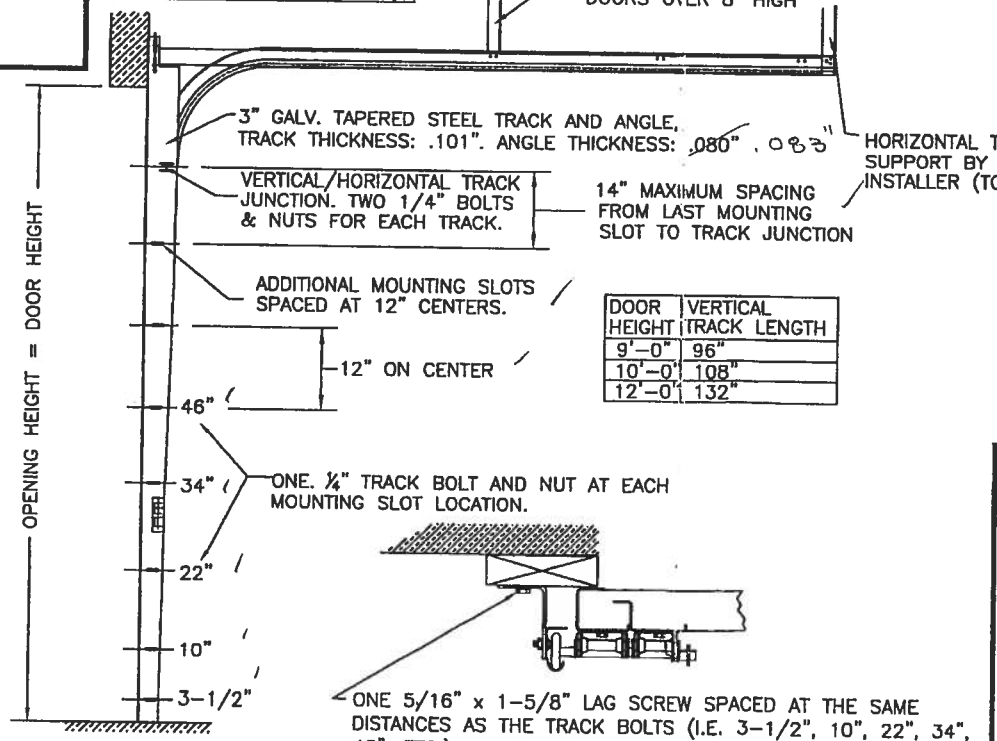

DOOR HEIGHT	VERTICAL TRACK LENGTH
9'-0"	96"
10'-0"	108"
12'-0"	132"

IGH

PANEL, GALV. INTER. STILES
PANEL, PAINTED/GALV. INTER. STILES

3, 84A, 93, 94
GH
ONTAL TRACK SUPPORT BY
OOR INSTALLER (TO SUIT)
NCE SYSTEM

. CONTINUOUS
ANGLE.

ORS ONLY)

IRATION

DOOR HEIGHT	"L"
6'-6"	70"
7'-0"	76"
7'-6"	82"
8'-0"	88"

CK,
.083"

1/6/04

DESIGN LOADS: +46.6 P.S.F. & -52.0 P.S.F. (MODELS 83, 84A, 93,
DESIGN LOADS: +46.6 P.S.F. & -51.7 P.S.F. (MODELS H93, H94)

5	8/25/03	ADDED EXTENDE
6	1/6/04	JAMB ATTACHME

JM DESIGN LOAD OF +372.8 LB & −416 LB. PER LINEAR FOOT OF JAMB.
NOT REQUIRED) COUNTERSUNK TO PROVIDE A FLUSH MOUNTING SURFACE.

BE FRAMED SOLID BY NOT LESS THAN (3) 2x6 PRESSURE TREATED GRADE
SS GRADE NOT LESS THAN 1200 PSI NOMINAL EXTREME FIBER STRESS
'0" HIGH. STUD WALLS TO BE CONTINUOUS FROM FOOTING TO TIE BEAMS
BUILDING CODE. (4) 2x6 PRESSURE TREATED GRADE #2 OR BETTER
LESS THAN 1200 PSI NOMINAL EXTREME FIBER STRESS IN BENDING FOR

TE

TO GROUT REINFORCED BLOCK WALL OR CONCRETE COLUMN.
WITH CONCRETE AND REINFORCED WITH #5 BAR EXTENDING
S. ALL BARS SHALL BE CONTINUOUS FROM THE TIE BEAMS
ICRETE COLUMN. BLOCK WALLS AND CONCRETE COLUMNS TO BE
OF RECORD AND IN ACCORDANCE WITH THE FLORIDA BUILDING CODE.

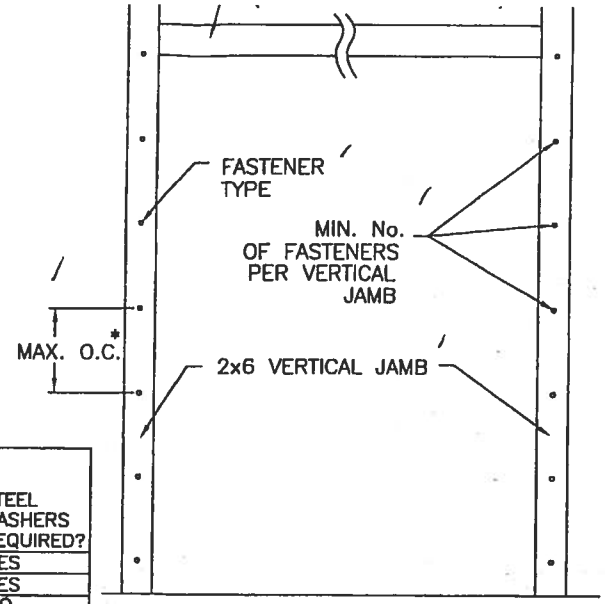

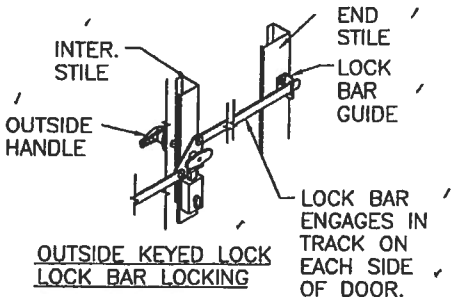

OUTSIDE KEYED LOCK
LOCK BAR LOCKING

INTER. S

OUTSIDE KEYE
HANDL

SUPPORTING STRUCTURE ATTACHMENT

ENT OF TRACK ANGLE TO 2x6 VERTICAL JAMBS OR SUPPORTING STRUCTURE)

YPE	MAXIMUM ON-CENTER DISTANCE BETWEEN FASTENERS*	STEEL WASHERS REQUIRED?
MBED LAG SCREW (ASTM A307, GRADE A) 1-1/2" EMBED INTO STRUCTURE	16"	YES
/4" MIN. EMBED ELCO TAPCON CONCRETE ANCHOR	10"	YES
/4" MIN. EMBED POWER-STUD EXPANSION ANCHOR (7400 SERIES)	16"	NO
/4" MIN. EMBED POWER LOK/BOLT ANCHOR BOLT (5000 SERIES)	14"	NO

NCHOR AND EDGE OF CONCRETE BLOCK: 3", EXCLUDING STUCCO THICKNESS.
O MORE THAN HALF OF THE MAXIMUM ON-CENTER DISTANCE. HIGHEST ANCHOR INSTALLED AT LEAST AS HIGH AS THE DOOR OPENING.
ENT FASTENERS.
D HAS BEEN USED IN THE DESIGN OF CONCRETE ANCHORS & WOOD FASTENERS.

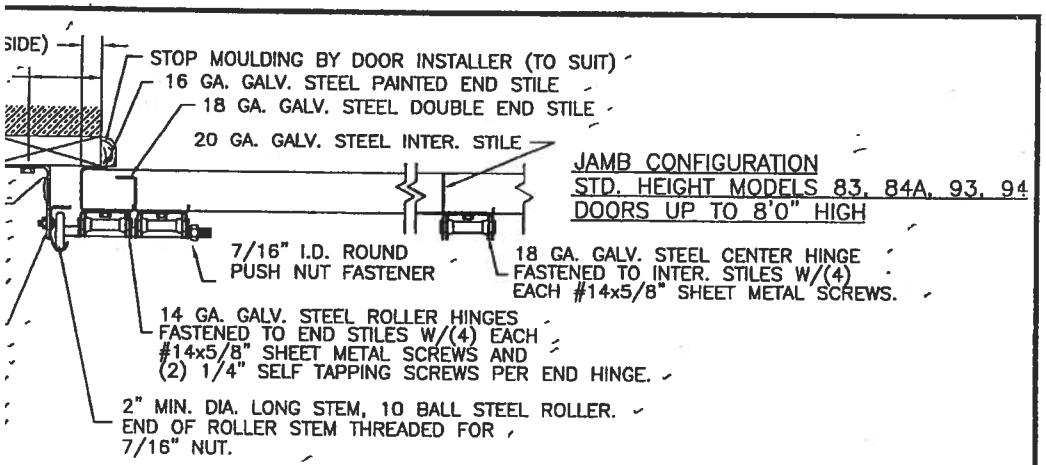

JAMB CONFIGURATION
STD. HEIGHT MODELS 83, 84A, 93, 94
DOORS UP TO 8'0" HIGH

JAMB CONFIGURATION
EXTENDED HEIGHT MODELS H93, H94
DOORS UP TO 12'0" HIGH

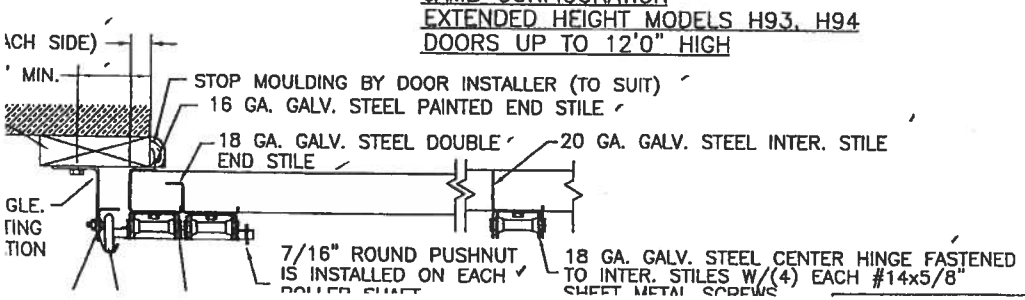

JAMB PREPARATION NOTE
EACH CONTINUOUS ANGLE TRACK SHALL BE FASTENED TO
PINE WOOD JAMBS WITH 5/16"x1-5/8" LAG SCREWS (12
7'0" HIGH AND (13) LAG SCREWS PER SIDE UP TO 8'0"
TO 9'0" HIGH, (15) LAG SCREWS PER SIDE UP TO 10'0"
SIDE UP TO 11'0" HIGH, (17) LAG SCREWS PER SIDE U
ATTACHMENT TO THE SUPPORTING STRUCTURE OF THE PRI
SHALL BE APPROVED BY THE PROFESSIONAL OF RECORD
ACCORDANCE WITH CURRENT BUILDING CODES FOR THE L
PREPARATION OF JAMBS BY OTHERS.

ALL MOUNTING OF TRACK, ANGLES, HORIZONTAL TRACK SU
DOOR HARDWARE TO BE INSTALLED PER CLOPAY INSTALLA
SUPPLIED WITH DOOR SYSTEM UNLESS OTHERWISE NOTED.

1/6/04

PRODUCT REVIEWED
as complying with the Florida
Building Code
Acceptance No 05-1212.4
Expiration Date 05/26/0
By
Miami-Dade Product Control
Division

DESIGN ENGINEER
MARK W. WESTERFIELD, P.E.
FLORIDA REGISTRATION No. 48495

DESIGN LOADS: +46.6 P.S.F. & −52.0 P.S.F. (MODELS 83,
DESIGN LOADS: +46.6 P.S.F. & −51.7 P.S.F. (MODEL H93,

MIAMI-DADE

BUILDING CODE COMPLIANCE OFFICE (BCCO)
PRODUCT CONTROL DIVISION

MIAMI-DADE COUNTY, FLORIDA
METRO-DADE FLAGLER BUILDING
140 WEST FLAGLER STREET, SUITE 1603
MIAMI, FLORIDA 33130-1563
(305) 375-2901 FAX (305) 375-2908

NOTICE OF ACCEPTANCE (NOA)

Tamko Roofing Products, Inc.
P.O. Box 1404
Joplin, MO 64802

SCOPE:

This NOA is being issued under the applicable rules and regulations governing the use of construction materials. The documentation submitted has been reviewed by Miami-Dade County Product Control Division and accepted by the Board of Rules and Appeals (BORA) to be used in Miami Dade County and other areas where allowed by the Authority Having Jurisdiction (AHJ).

This NOA shall not be valid after the expiration date stated below. The Miami-Dade County Product Control Division (In Miami Dade County) and/or the AHJ (in areas other than Miami Dade County) reserve the right to have this product or material tested for quality assurance purposes. If this product or material fails to perform in the accepted manner, the manufacturer will incur the expense of such testing and the AHJ may immediately revoke, modify, or suspend the use of such product or material within their jurisdiction. BORA reserves the right to revoke this acceptance, if it is determined by Miami-Dade County Product Control Division that this product or material fails to meet the requirements of the applicable building code.

This product is approved as described herein, and has been designed to comply with the High Velocity Hurricane Zone of the Florida Building Code.

DESCRIPTION: TAMKO Heritage Declaration & Heritage XL Roof Shingles

LABELING: Each unit shall bear a permanent label with the manufacturer's name or logo, city, state and following statement: "Miami-Dade County Product Control Approved", unless otherwise noted herein.

RENEWAL of this NOA shall be considered after a renewal application has been filed and there has been no change in the applicable building code negatively affecting the performance of this product.

TERMINATION of this NOA will occur after the expiration date or if there has been a revision or change in the materials, use, and/or manufacture of the product or process. Misuse of this NOA as an endorsement of any product, for sales, advertising or any other purposes shall automatically terminate this NOA. Failure to comply with any section of this NOA shall be cause for termination and removal of NOA.

ADVERTISEMENT: The NOA number preceded by the words Miami-Dade County, Florida, and followed by the expiration date may be displayed in advertising literature. If any portion of the NOA is displayed, then it shall be done in its entirety.

INSPECTION: A copy of this entire NOA shall be provided to the user by the manufacturer or its distributors and shall be available for inspection at the job site at the request of the Building Official.

This consists of pages 1 through 4.
The submitted documentation was reviewed by Frank Zuloaga, RRC

ROOFING ASSEMBLY APPROVAL

Category:	Roofing
Sub-Category:	07310 Composition Shingles
Materials	Dimensional
Deck Type:	Wood

1. SCOPE:

This approves **Tamko Heritage Declaration and Heritage XL** Asphalt Shingles, manufactured by **Tamko Roofing Products, Inc.** as described in this Notice of Acceptance.

2. PRODUCT DESCRIPTION

Product	Dimensions	Test Specifications	Product Description
Heritage Declaration & Heritage XL	12" x 36"	TAS 110	A heavy weight dimensional asphalt shingle.

3. EVIDENCE SUBMITTED:

Test Agency	Test Identifier	Test Name/Report	Date
PRI Asphalt Technologies, Inc.	TAS 100	TAP-066-02-01	01/09/03
		TAP-073-02-01	05/20/03
Underwriters Laboratories, Inc.	ASTM D 3462	R2919	06/12/03
Underwriters Laboratories, Inc.	TAS 107	03CA08442	06/12/03

4. LIMITATIONS

4.1 Fire classification is not part of this acceptance; refer to a current Approved Roofing Materials Directory for fire ratings of this product.

4.2 Shall not be installed on roof mean heights in excess of 33 ft.

4.3 All products listed herein shall have a quality assurance audit in accordance with the Florida Building Code and Rule 9B-72 of the Florida Administrative Code.

5. INSTALLATION

5.1 Shingles shall be installed in accordance with Roofing Application Standard RAS 115.

5.2 The manufacturer shall provide clearly written application instructions.

5.3 Exposure and course layout shall be in compliance with Detail 'A', attached.

5.4 Nailing shall be in compliance with Detail 'B', attached.

6. LABELING

5.1 Shingles shall be labeled with the Miami-Dade Logo or the wording "Miami-Dade County-Product Control Approved".

7. BUILDING PERMIT REQUIREMENTS

7.1 Application for building permit shall be accompanied by copies of the following:

7.1.1 This Notice of Acceptance.

7.1.2 Any other documents required by the Building Official or the applicable Building Code in order to properly evaluate the installation of this system.

DETAIL A

HERITAGE DECLARATION & XL

All dimensions are in inches.

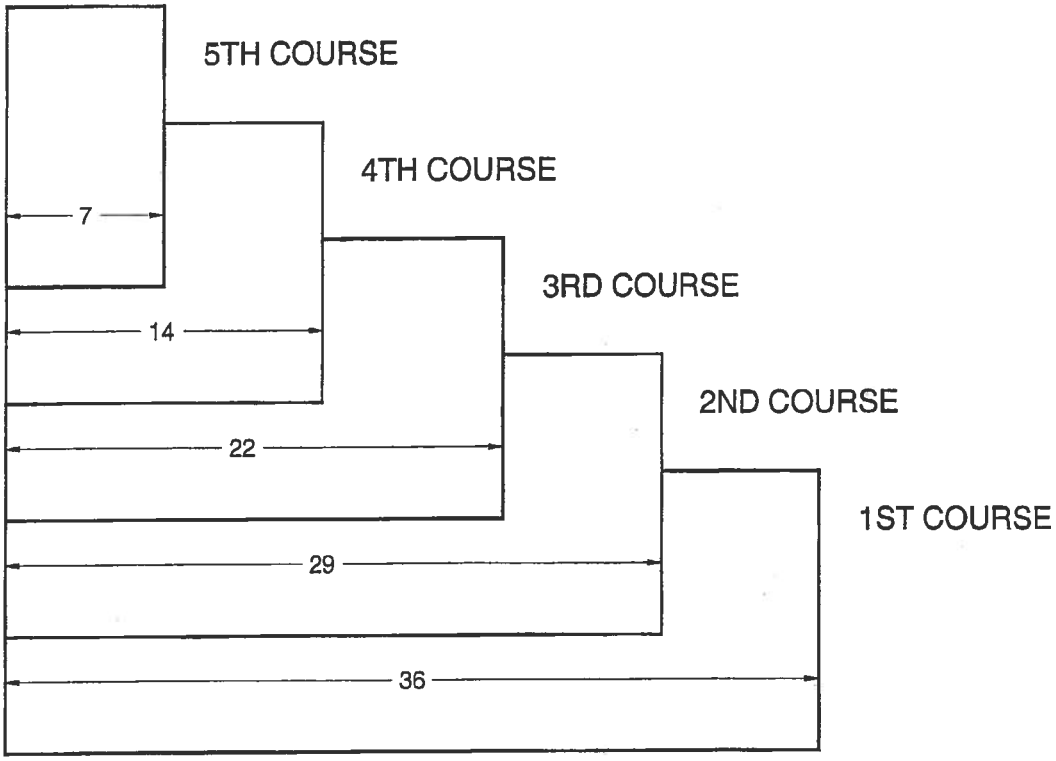

DETAIL B

HERITAGE DECLARATION

12" x 36" LAMINATED SHINGLE
All dimensions are in inches.

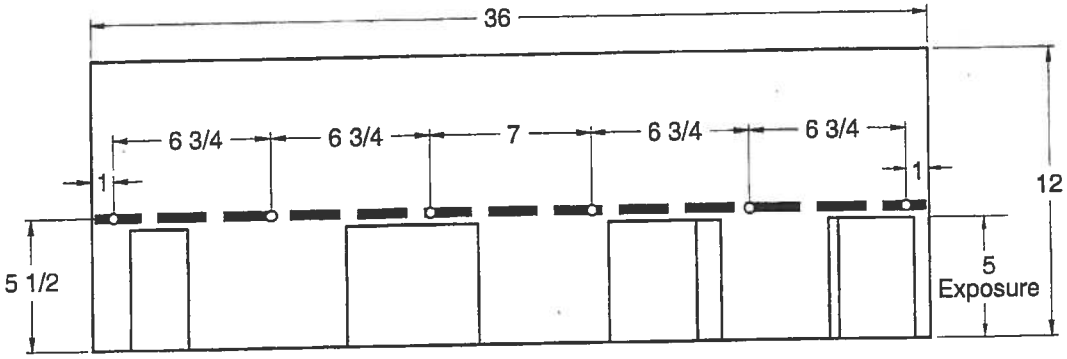

HERITAGE XL

12" x 36" LAMINATED SHINGLE
All dimensions are in inches.

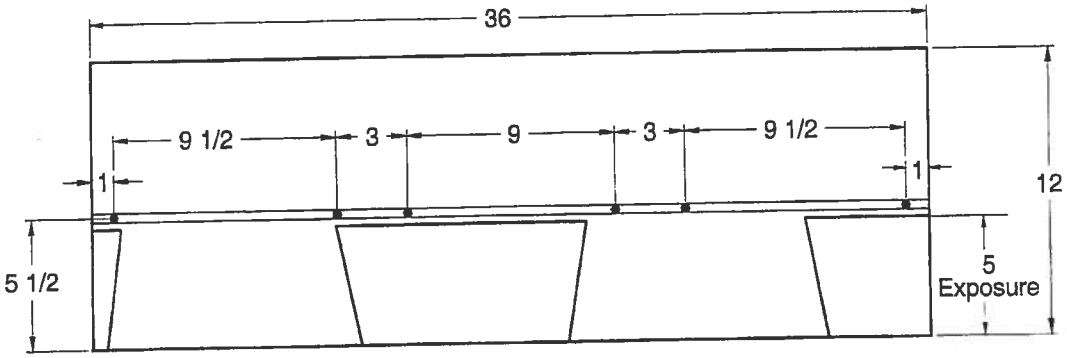

END OF THIS ACCEPTANCE

MIAMI-DADE

BUILDING CODE COMPLIANCE OFFICE (BCCO)
PRODUCT CONTROL DIVISION

MIAMI-DADE COUNTY, FLORIDA
METRO-DADE FLAGLER BUILDING
140 WEST FLAGLER STREET, SUITE 1603
MIAMI, FLORIDA 33130-1563
(305) 375-2901 FAX (305) 375-2908

NOTICE OF ACCEPTANCE (NOA)

Therma-Tru Corporation
108 Mutzfeld Road
Butler, IN 46721

SCOPE:

This NOA is being issued under the applicable rules and regulations governing the use of construction materials. The documentation submitted has been reviewed by the BCCO and accepted by the Building Code and Product Review Committee (BCPRC) to be used in Miami Dade County and other areas where allowed by the Authority Having Jurisdiction (AHJ).

This NOA shall not be valid after the expiration date stated below. The BCCO (In Miami Dade County) and/or the AHJ (in areas other than Miami Dade County) reserve the right to have this product or material tested for quality assurance purposes. If this product or material fails to perform in the accepted manner, the manufacturer will incur the expense of such testing and the AHJ may immediately revoke, modify, or suspend the use of such product or material within their jurisdiction. BCPRC reserves the right to revoke this acceptance, if it is determined by BCCO that this product or material fails to meet the requirements of the applicable building code.

This product is approved as described herein, and has been designed to comply with the South Florida Building Code, 1994 Edition for Miami-Dade County or Florida Building Code.

DESCRIPTION: Outswing Glazed Residential Steel Door w\Sidelites

APPROVAL DOCUMENT: Drawing No. S-2003, titled "Therma-Tru Wood edge Outswing", sheets 1 through 6 to 6, prepared by RW Consulting, dated 3/9/01, bearing the Miami-Dade County Product Control Renewal stamp with the Notice of Acceptance number and expiration date by the Miami-Dade County Product Control Division.

MISSILE IMPACT RATING: None

LABELING: Each unit shall bear a permanent label with the manufacturer's name or logo, city, state and following statement: "Miami-Dade County Product Control Approved", unless otherwise noted herein.

RENEWAL of this NOA shall be considered after a renewal application has been filed and there has been no change in the applicable building code negatively affecting the performance of this product.

TERMINATION of this NOA will occur after the expiration date or if there has been a revision or change in the materials, use, and/or manufacture of the product or process. Misuse of this NOA as an endorsement of any product, for sales, advertising or any other purposes shall automatically terminate this NOA. Failure to comply with any section of this NOA shall be cause for termination and removal of NOA.

ADVERTISEMENT: The NOA number preceded by the words Miami-Dade County, Florida, and followed by the expiration date may be displayed in advertising literature. If any portion of the NOA is displayed, then it shall be done in its entirety.

INSPECTION: A copy of this entire NOA shall be provided to the user by the manufacturer or its distributors and shall be available for inspection at the job site at the request of the Building Official.

This NOA **renews NOA # 00-0207.06** and, consists of this page 1 as well as approval document mentioned above. The submitted documentation was reviewed by **Raul Rodriguez.**

PRODUCT CONTROL ACCEPTED

THERMA-TRU®

"CONSTRUCTION" AND "PREMIUM" SERIES
INSULATED STEEL DOOR WITH WOOD FRAMES.

GENERAL NOTES

1. THIS PRODUCT IS DESIGNED TO MEET THE SOUTH FLORIDA BUILDING CODE 1994 EDITION FOR MIAMI–DADE COUNTY.
2. WOOD BUCKS BY OTHERS, MUST BE ANCHORED PROPERLY TO TRANSFER LOADS TO THE STRUCTURE.
3. PRODUCT ANCHORS SHALL BE AS LISTED AND SPACED AS SHOWN ON DETAILS. ANCHOR EMBEDMENT TO BASE MATERIAL SHALL BE BEYOND WALL DRESSING OR STUCCO.
4. MIAMI–DADE APPROVED IMPACT RESISTANT SHUTTERS ARE REQUIRED.
5. DESIGNED PRESSURE RATING SEE TABLE PAGE 1.
6. SIDELITES ARE AN OPTION AND CAN BE IN A SINGLE OR DOUBLE CONFIGURATION.

RESIDENTIAL INSULATED STEEL DOOR
(Common to all frame conditions)

Door Leaf Construction:

Face sheets: 25 GA.(0.018")minimum thickness, Galvanized steel A–525 commercial quality – AKDQ per ASTM 620 with yield strength Fy(min.)=47,000 psi

Core design: Polyurethane foam core, with1.9 lbs. density by BASF.

Construction: Flush or embossed type. The vertical edges of the skin, are rolled formed to provide a mechanical interlock with finger jointed pine stiles. Wood composite end rails are butt jointed to styles at corners. Panels are sandwich glazed using a two piece PVC lite frame with mitered & welded corners.

TABLE OF CONTENTS

SHEET #	DESCRIPTION
1	COMMON (GENERAL NOTES, TYPICAL ELEVATION)
2	VERTICAL CROSS SECTIONS & BILL OF MATERIALS
3	HORIZONTAL CROSS SECTIONS & DOOR MODELS
4	HORIZONTAL CROSS SECTIONS & GLAZING DETAILS
5	ANCHORING LOCATIONS
6	ANCHORING LOCATIONS

DESIGN PRESSURE RATING	
	WHERE WATER INFILTRATION REQUIREMENT IS NEEDED
POSITIVE	+ 48.0 PSF
NEGATIVE	– 51.0 PSF

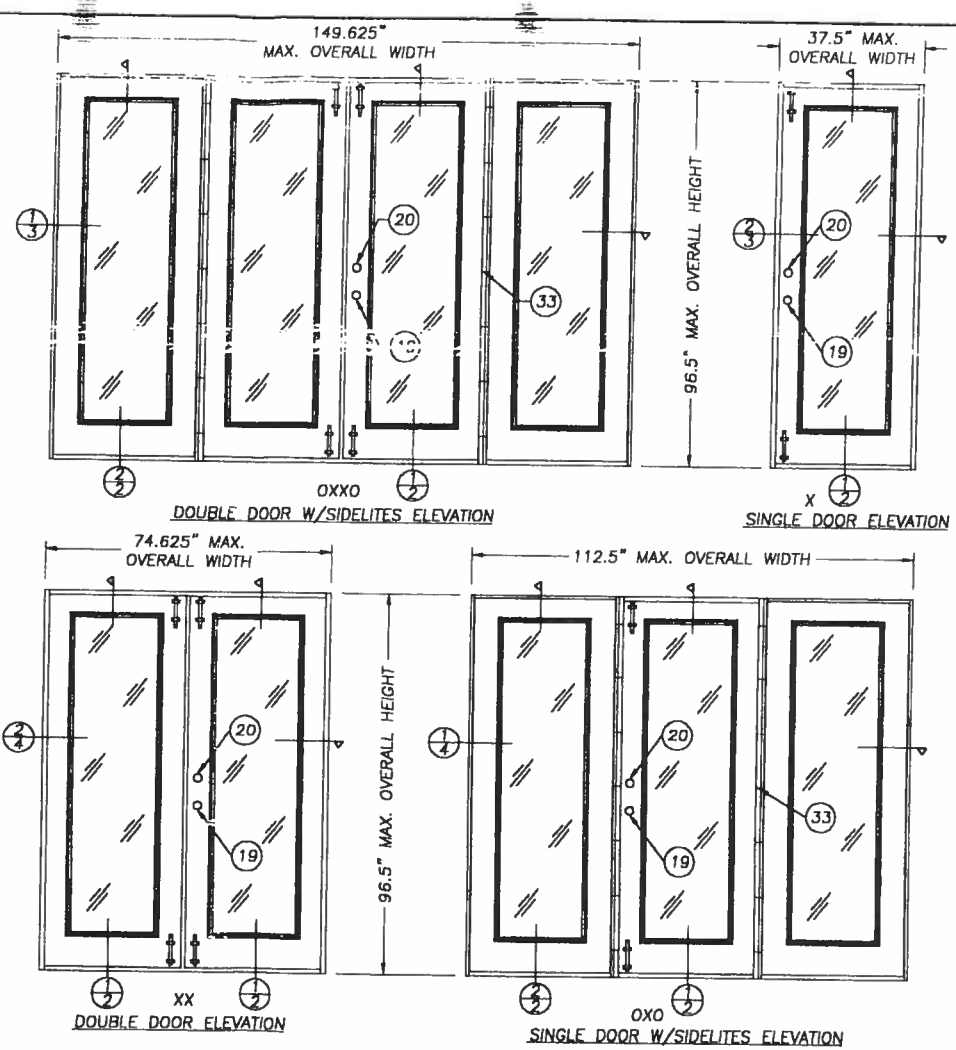

ALL DOOR MODELS ARE VIEWED FROM THE INTERIOR SIDE (OUTSWING DOORS)

PRODUCT RENEWED as complying with the Florida Building Code Acceptance No 02-0418.01 Expiration Date 04/09/07 By Miami Dade Product Control Division

APPROVED AS COMPLYING WITH THE SOUTH FLORIDA BUILDING CODE DATE APRIL 05, 2001 BY Isiaq I. Chanda PRODUCT CONTROL DIVISION BUILDING CODE COMPLIANCE OFFICE ACCEPTANCE NO. 00-0267.06

THERMA TRU®
108 MUTZFELD Rd.
BUTLER, IN 46721
PH. (219) 868-5811

PRODUCT: THREMA TRU WOODEDGE OUTSWING UP TO 12–0 x 8–0 W/3–0 SIDELITES

PART OR ASSEMBLY: ELEVATIONS AND GERERAL NOTES

NO.	DATE	REVISIONS	BY
2	3/09/01	GENERAL REVISION	RW
1	4/11/00	GENERAL REVISION	TJH

RW BUILDING CONSULTANTS, INC.
813.684.3831

DATE: 3/3/00
SCALE: N.T.S.
DWG. BY: TJH
CHK. BY: RW
DRAWING NO.: S–2003
SHEET 1 OF 6

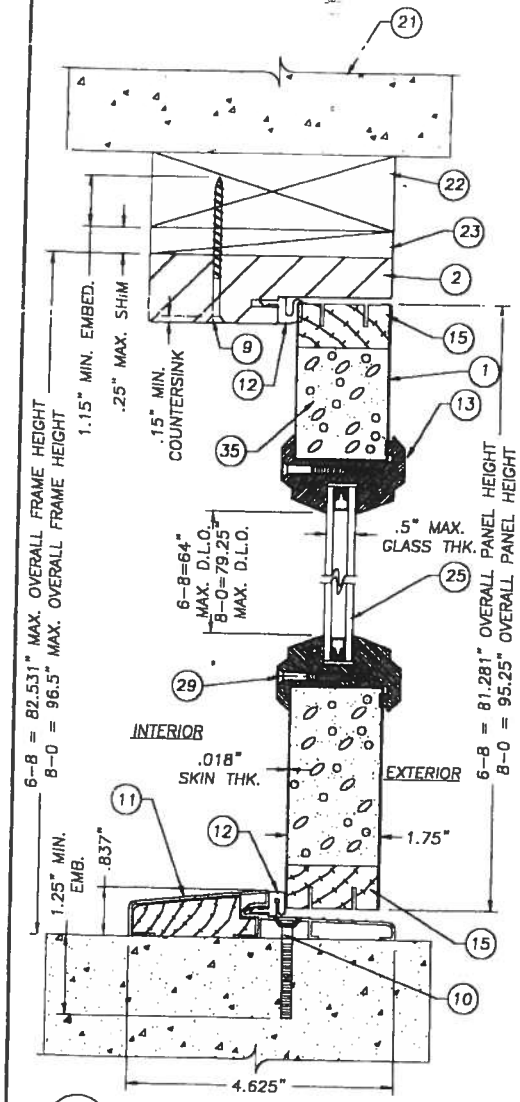

1/2 VERTICAL CROSS SECTION

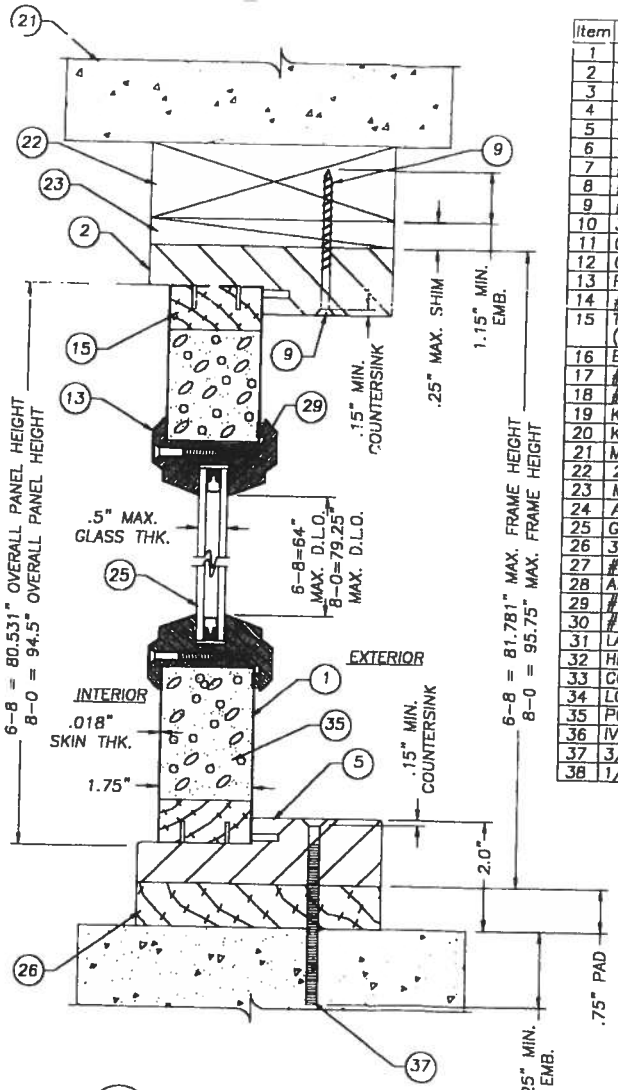

2/2 VERTICAL CROSS-SECTION

Item	DESCRIPTION	Material
1	CONSTRUC. SERIES DOOR (25GA. .018" MIN.)	STEEL
2	4 1/2" HEADER (THERMA-TRU)	WOOD
3	4 1/2" LATCH JAMB (THERMA-TRU, PONDEROSA PINE)	WOOD
4	4 1/2" HINGE JAMB (THERMA-TRU, PONDEROSA PINE)	WOOD
5	4 1/2" BLANK JAMB (THERMA-TRU, PONDEROSA PINE)	WOOD
6	4" x 4" HINGE .097" THK. (THERMA-TRU)	STEEL
7	#9 x 3/4" lg. (Hinge to Frame)	STEEL
8	#10 WOOD SCREW X 2 1/2" LG.	STEEL
9	#8 x 2 1/2" LG. WOOD SCREW	STEEL
10	3/16" TAPCON ANCHOR (ELCO, 1.75" MIN. LG.)	STEEL
11	ONE PIECE BUMP FACE THRESHOLD (THERMA-TRU)	ALUM./WOOD
12	COMPRESSION WEATHERSTRIP (THERMA-TRU)	
13	PLASTIC LIP LITE FRAME (PVC, THERMA-TRU)	PVC
14	#10 x 1 1/4" LG. TYPE "A" FLATHEAD	STEEL
15	TOP & BOTTOM RAIL (1.75" x 1.625") (THERMA-TRU, PONDEROSA PINE)	WOOD
16	BLANK SIDE STYLE (THERMA-TRU, PONDEROSA PINE)	WOOD
17	#8 x 1/2" LG. TYPE "AB" PANHEAD	STEEL
18	#10 WOOD SCREW X 2" LG.	STEEL
19	KWIKSET 200 DL PASSAGE	
20	KWIKSET 660 DEADBOLT	
21	MASONRY WALL	
22	2x WOOD BUCK	WOOD
23	MAX. 1/4" SHIM MATERIAL	WOOD
24	ASTRAGAL (.052" WALL THK.)	WOOD/ALUM.
25	GLAZING, 1/2" INSULATED TEMPERED GLASS	GLASS
26	3/4" THK. PRESSURE TREATED SIDELITE PAD	WOOD
27	#12 x 1/2"LG. PANHEAD SHEET METAL SCREW	STEEL
28	ASTRAGAL WEATHERSRIP	VINYL
29	#6-18 x 1 3/4" PHILLIPS FLATHEAD SCREW	STEEL
30	#9 x 1" LG. PHILLIPS FLATHEAD SCREW	STEEL
31	LATCH SIDE STYLE (THERMA-TRU, PONDEROSA PINE)	WOOD
32	HINGE SIDE STYLE (THERMA-TRU, PONDEROSA PINE)	WOOD
33	CORRUGATED STAPLE FASTENER (1 1/2" X 3/4")	STEEL
34	LOCK BLOCK (4" x 11" x 1.625")	WOOD
35	POLYURETHANE FOAM (BASF, 1.9lbs. DENSITY)	FOAM
36	IVES SURFACE BOLT (.25" STEEL)	STEEL
37	3/16" TAPCON ANCHOR (ELCO, 3.25" MIN. LG.)	STEEL
38	1/8 THK. CELLULAR GLAZING TAPE (STIK-II TAPE)	–

NOTE:
SIDELITE IS DIRECT SET INTO JAMB WITH #10 x 2" PH.F.H. WOOD SCREWS AT 6" FROM EACH END AND A MAX. OF 12" O.C. ON VERTICAL LEG JAMBS ONLY.

PRODUCT RENEWED as complying with the Florida Building Code
Acceptance No. 62-0418.01
Expiration Date 04/05/07
By Miami-Dade Product Control Division

APPROVED AS COMPLYING WITH THE SOUTH FLORIDA BUILDING CODE
DATE APRIL 05, 2001
BY Ishaq I. Chanda
PRODUCT CONTROL DIVISION
BUILDING CODE COMPLIANCE OFFICE
ACCEPTANCE NO. 00-0207.06

THERMA-TRU®
108 MUTZFELD Rd.
BUTLER, IN 46721
PH. (219) 868-5811

PRODUCT: THERMA TRU WOODEDGE OUTSWING UP TO 12-0 x 8-0 W/3-0 SIDELITES

PART OR ASSEMBLY: VERTICAL CROSS SECTIONS & BILL OF MATERIALS

NO.	DATE	REVISIONS	BY
2	3/09/01	GENERAL REVISION	RW
1	4/11/00	GENERAL REVISION	TJH

RW BUILDING CONSULTANTS, INC.
813.684.3831

DATE:	3/3/00
SCALE:	N.T.S.
DWG. BY:	TJH
CHK. BY:	RW
DRAWING NO	S-2003
SHEET	2 OF 6

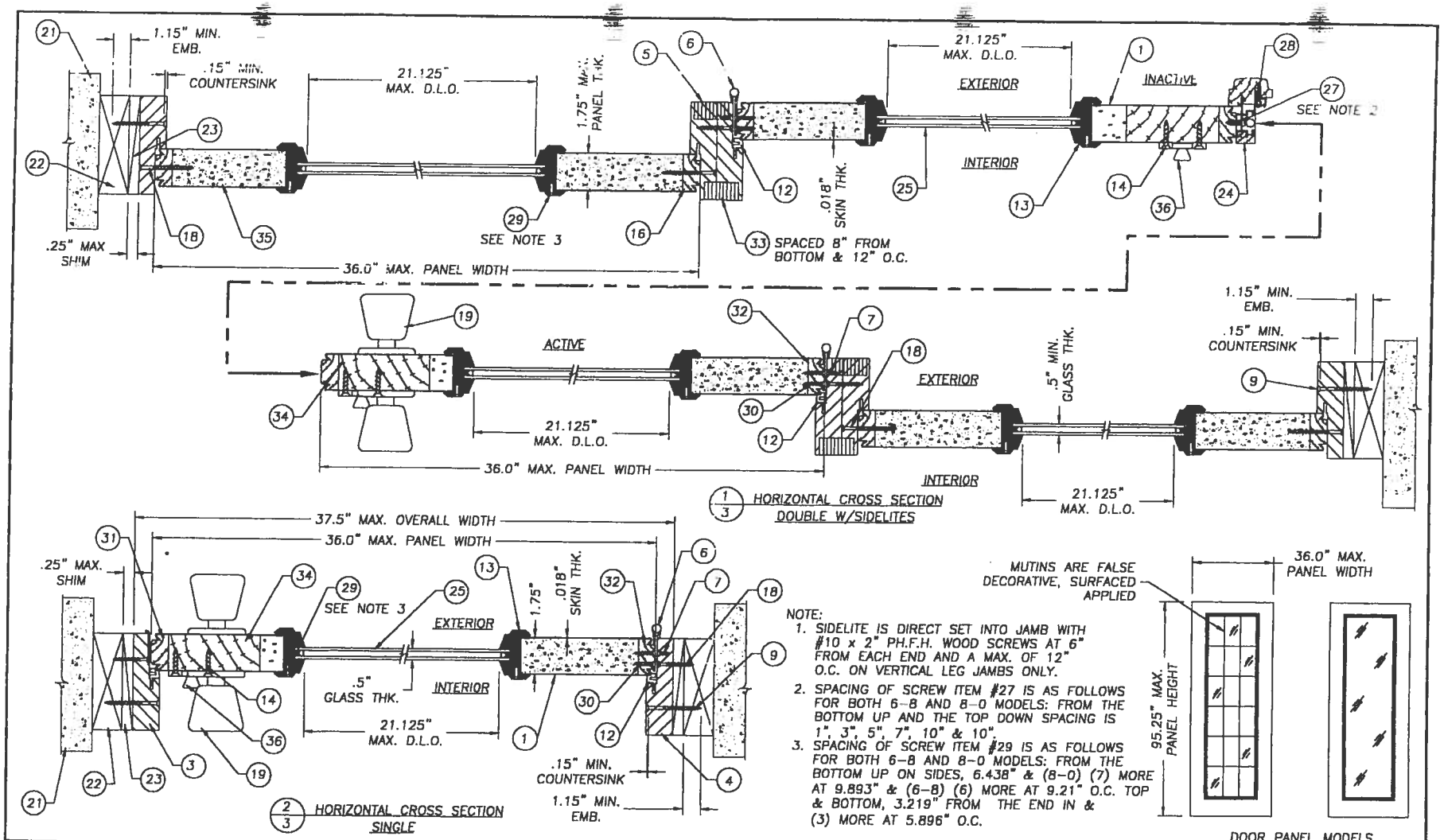

NOTE:

1. SIDELITE IS DIRECT SET INTO JAMB WITH #10 x 2" PH.F.H. WOOD SCREWS AT 6" FROM EACH END AND A MAX. OF 12" O.C. ON VERTICAL LEG JAMBS ONLY.
2. SPACING OF SCREW ITEM #27 IS AS FOLLOWS FOR BOTH 6-8 AND 8-0 MODELS: FROM THE BOTTOM UP AND THE TOP DOWN SPACING IS 1", 3", 5", 7", 10" & 10".
3. SPACING OF SCREW ITEM #29 IS AS FOLLOWS FOR BOTH 6-8 AND 8-0 MODELS: FROM THE BOTTOM UP ON SIDES, 6.438" & (8-0) (7) MORE AT 9.893" & (6-8) (6) MORE AT 9.21" O.C. TOP & BOTTOM, 3.219" FROM THE END IN & (3) MORE AT 5.896" O.C.

THERMA TRU®
108 MUTZFELD Rd.
BUTLER, IN 46721
PH. (219) 868-5811

NO.	DATE		BY
2	3/09/01	GENERAL REVISION	RW
1	4/11/00	GENERAL REVISION	TJH

REVISIONS

PRODUCT: THERMA TRU WOODEDGE OUTSWING UP TO 12-0 x 8-0 W/3-0 SIDELITES

PART OR ASSEMBLY: HORIZONTAL CROSS SECTIONS & DOOR MODELS

RW BUILDING CONSULTANTS, INC. 813.684.3831

PRODUCT RENEWED as complying with the Florida Building Code Acceptance No. C2-0413.01 Expiration Date 04/05/07 By Miami Dade Product Control Division

APPROVED AS COMPLYING WITH THE SOUTH FLORIDA BUILDING CODE
DATE APRIL 03, 2001
BY Ishaq I. Chanda
PRODUCT CONTROL DIVISION
BUILDING CODE COMPLIANCE OFFICE
ACCEPTANCE NO. 00-0207.06

DATE:	3/3/00
SCALE:	N.T.S.
DWG. BY:	TJH
CHK. BY:	RW
DRAWING NO.:	S-2003
SHEET	3 OF 6

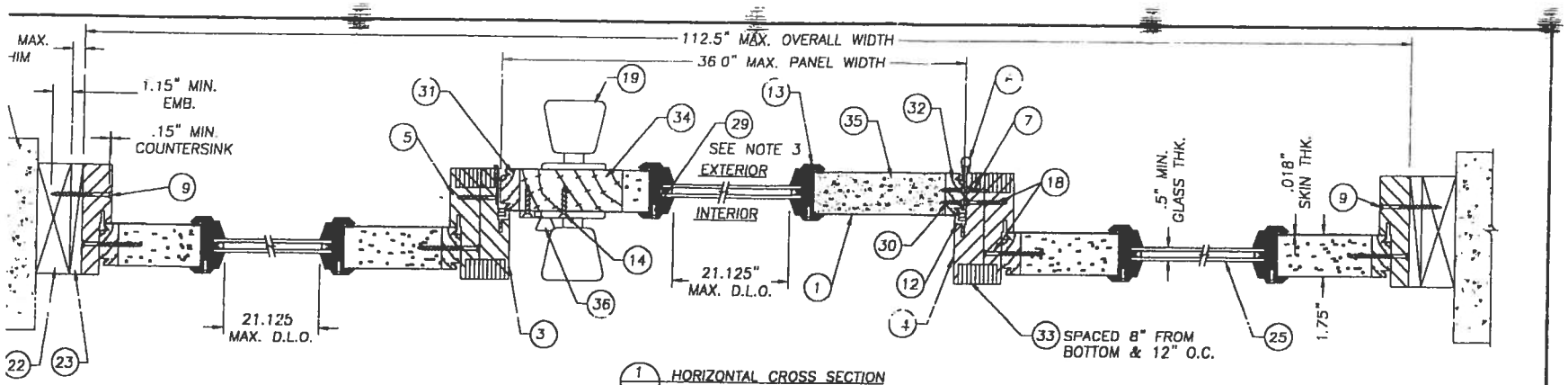

1/4 HORIZONTAL CROSS SECTION SINGLE W/SIDELITES

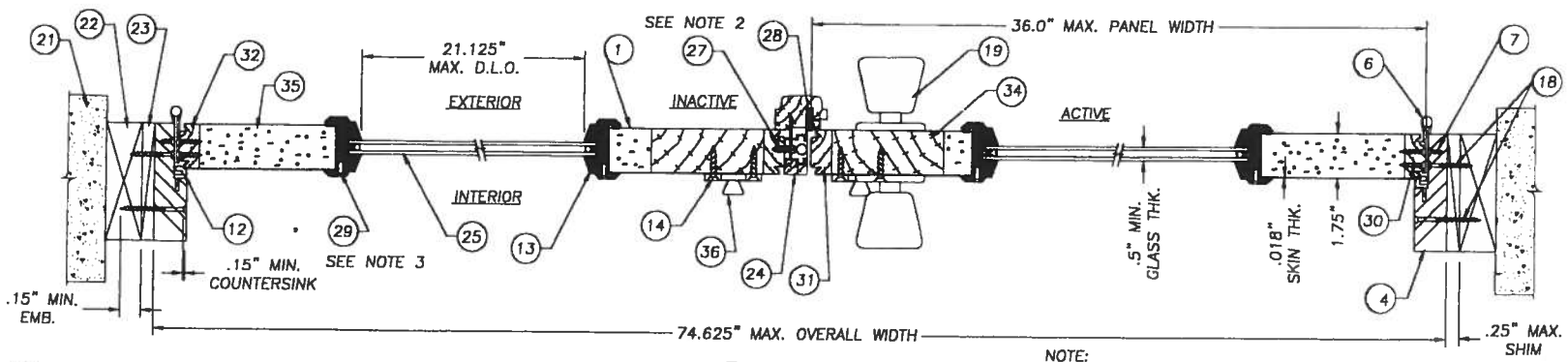

2/4 HORIZONTAL CROSS SECTION DOUBLE

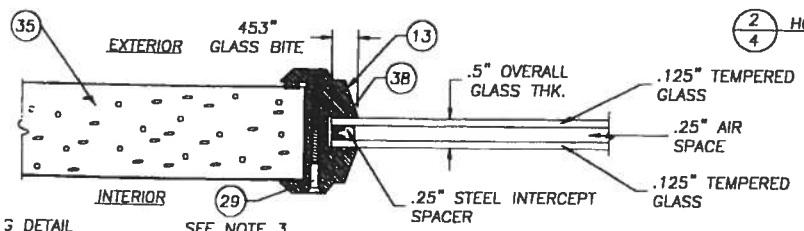

3 DETAIL

NOTE:

1. SIDELITE IS DIRECT SET INTO JAMB WITH #10 x 2" PH.F.H. WOOD SCREWS AT 6" FROM EACH END AND A MAX. OF 12" O.C. ON VERTICAL LEG JAMBS ONLY.
2. SPACING OF SCREW ITEM #27 IS AS FOLLOWS FOR BOTH 6-8 AND 8-0 MODELS: FROM THE BOTTOM UP AND THE TOP DOWN SPACING IS 1", 3", 5", 7", 10" & 10".
3. SPACING OF SCREW ITEM #29 IS AS FOLLOWS FOR BOTH 6-8 AND 8-0 MODELS: FROM THE BOTTOM UP ON SIDES, 6.438" & (8-0) (7) MORE AT 9.893" & (6-8) (6) MORE AT 9.21" O.C. TOP & BOTTOM, 3.219" FROM THE END IN & (3) MORE AT 5.896" O.C.

THERMA TRU®
108 MUTZFELD Rd.
BUTLER, IN 46721
PH. (219) 868-5811

NO.	DATE	REVISIONS	BY
2	3/09/01	GENERAL REVISION	RW
1	4/11/00	GENERAL REVISION	TJH

PRODUCT: THERMA TRU WOODEDGE OUTSWING UP TO 12-0 x 8-0 W/3-0 SIDELITES

PART OR ASSEMBLY: HORIZONTAL CROSS SECTIONS & GLAZING DETAIL

RW BUILDING CONSULTANTS, INC. 813.684.3831

PRODUCT RENEWED as complying with the Florida Building Code Acceptance No. C2-0414-01 Expiration Date 6/10/07 By Miami Dade Product Control Division

APPROVED AS COMPLYING WITH THE SOUTH FLORIDA BUILDING CODE DATE APRIL 05, 2001 BY Ishaq I. Chanda PRODUCT CONTROL DIVISION BUILDING CODE COMPLIANCE OFFICE ACCEPTANCE NO 00-0207.06

DATE:	3/3/00
SCALE:	N.T.S.
DWG. BY:	TJH
CHK. BY:	RW
DRAWING NO.:	S 2003
SHEET	4 OF 6

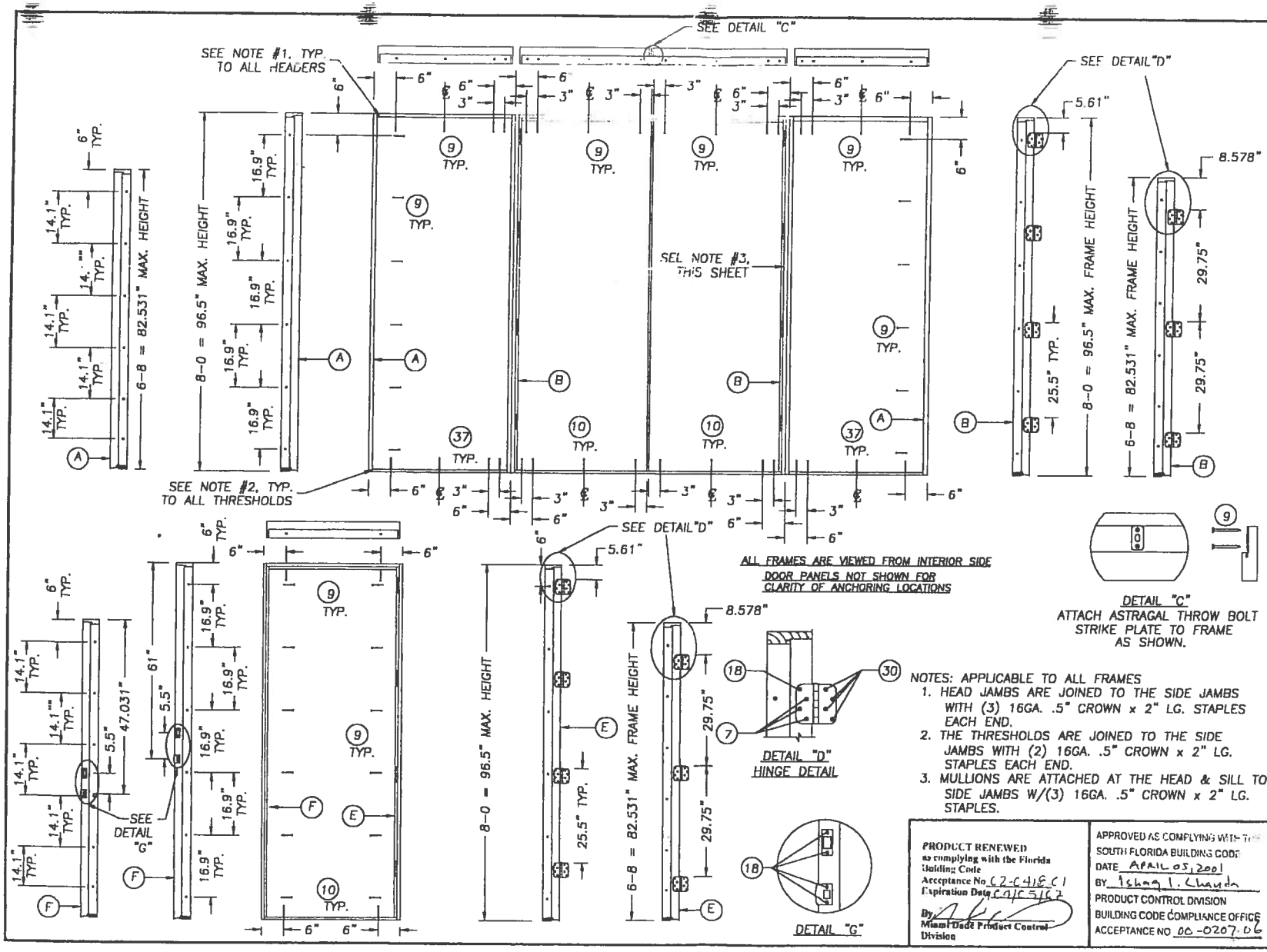

NOTES: APPLICABLE TO ALL FRAMES

1. HEAD JAMBS ARE JOINED TO THE SIDE JAMBS WITH (3) 16GA. .5" CROWN x 2" LG. STAPLES EACH END.
2. THE THRESHOLDS ARE JOINED TO THE SIDE JAMBS WITH (2) 16GA. .5" CROWN x 2" LG. STAPLES EACH END.
3. MULLIONS ARE ATTACHED AT THE HEAD & SILL TO SIDE JAMBS W/(3) 16GA. .5" CROWN x 2" LG. STAPLES.

PRODUCT RENEWED as complying with the Florida Building Code
Acceptance No. 62-0418.01
Expiration Date 04/05/02
By Miami-Dade Product Control Division

APPROVED AS COMPLYING WITH THE SOUTH FLORIDA BUILDING CODE
DATE APRIL 05, 2001
BY Ishaq I. Chanda
PRODUCT CONTROL DIVISION
BUILDING CODE COMPLIANCE OFFICE
ACCEPTANCE NO. 00-0207.06

THERMA TRU®
108 MUTZFELD Rd.
BUTLER, IN 46721
PH. (219) 868-5811

PRODUCT: THERMA TRU WOODEDGE OUTSWING UP TO 12-0 x 8-0 W/3-0 SIDELITES

PART OR ASSEMBLY: ANCHORING LAYOUTS

NO.	DATE		BY
2	3/09/01	GENERAL REVISION	RW
1	4/11/00	GENERAL REVISION	TJH

REVISIONS

RW BUILDING CONSULTANTS, INC.
813.684.3831

DATE: 3/2/00
SCALE: N.T.S.
DWG. BY: TJH
CHK. BY: RW
DRAWING NO.: S-2003
SHEET 5 OF 6

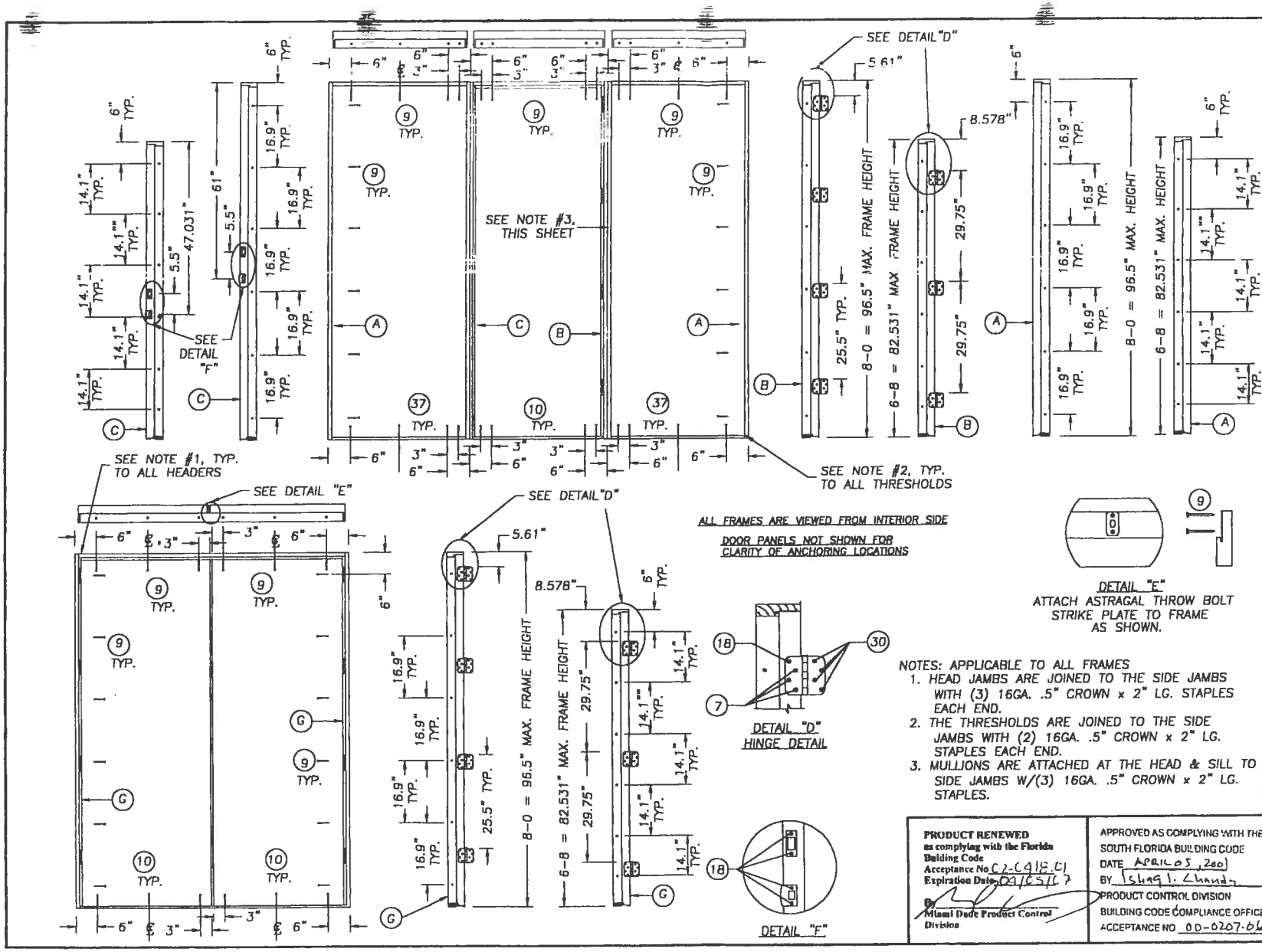

NOTES: APPLICABLE TO ALL FRAMES

1. HEAD JAMBS ARE JOINED TO THE SIDE JAMBS WITH (3) 16GA. .5" CROWN x 2" LG. STAPLES EACH END.
2. THE THRESHOLDS ARE JOINED TO THE SIDE JAMBS WITH (2) 16GA. .5" CROWN x 2" LG. STAPLES EACH END.
3. MULLIONS ARE ATTACHED AT THE HEAD & SILL TO SIDE JAMBS W/(3) 16GA. .5" CROWN x 2" LG. STAPLES.

PRODUCT RENEWED
as complying with the Florida Building Code
Acceptance No. C2-C416.C1
Expiration Date 09/05/07
By
Miami Dade Product Control Division

APPROVED AS COMPLYING WITH THE SOUTH FLORIDA BUILDING CODE
DATE APRIL 05, 2001
BY Ishaq I. Chanda
PRODUCT CONTROL DIVISION
BUILDING CODE COMPLIANCE OFFICE
ACCEPTANCE NO 00-0207.06

THERMA TRU®
108 MUTZFELD Rd.
BUTLER, IN 46721
PH. (219) 868-5811

PRODUCT: THERMA TRU WOODEDGE OUTSWING UP TO 12-0 x 8-0 W/3-0 SIDELITES

PART OR ASSEMBLY: ANCHORING LAYOUTS

NO.	DATE	REVISIONS	BY
2	3/09/01	GENERAL REVISIONS	RW
1	4/11/00	GENERAL REVISIONS	TJH

RW BUILDING CONSULTANTS, INC.
813.684.3831

DATE: 3/2/00
SCALE: N.T.S.
DWG. BY: TJH
CHK. BY: RW
DRAWING NO.: S-2003
SHEET 6 OF 6

Location:_____ **Project Name:**_____

As required by Florida Statute 553.842 and Florida Administrative Code 9B-72, please provide the information and the product approval number(s) on the building components listed below if they will be utilized on the construction project for which you are **applying for a building permit on or after April 1, 2004**. We recommend you contact your local product supplier should you not know the product approval number for any of the applicable listed products. More information about statewide product approval can be obtained at www.floridabuilding.org

Category/Subcategory	Manufacturer	Product Description	Approval Number(s)
A. EXTERIOR DOORS			
1. Swinging			FL 424.2
2. Sliding			
3. Sectional			
4. Roll up			
5. Automatic			
6. Other			
B. WINDOWS	Alenco	1111/F1214.10	
1. Single hung			FL 6029.7
2. Horizontal Slider			
3. Casement			
4. Double Hung			
5. Fixed			
6. Awning			
7. Pass -through			
8. Projected			
9. Mullion			
10. Wind Breaker			
11 Dual Action			
12. Other			
C. PANEL WALL			
1. Siding			FL 889.122
2. Soffits			
3. EIFS			
4. Storefronts			
5. Curtain walls			
6. Wall louver			
7. Glass block			
8. Membrane			
9. Greenhouse			
10. Other			
D. ROOFING PRODUCTS			
1. Asphalt Shingles	EIK		728.4
2. Underlayments			1814.3
3. Roofing Fasteners			
4. Non-structural Metal Rf			
5. Built-Up Roofing			
6. Modified Bitumen			
7. Single Ply Roofing Sys			
8. Roofing Tiles			
9. Roofing Insulation			
10. Waterproofing			
11. Wood shingles /shakes			
12. Roofing Slate			

14. Cements-Adhesives – Coatings			
15. Roof Tile Adhesive			
16. Spray Applied Polyurethane Roof			
17. Other			
E. SHUTTERS			
1. Accordion			
2. Bahama			
3. Storm Panels			
4. Colonial			
5. Roll-up			
6. Equipment			
7. Others			
F. SKYLIGHTS			
1. Skylight			
2. Other			
G. STRUCTURAL COMPONENTS			
1. Wood connector/anchor			
2. Truss plates			
3. Engineered lumber			
4. Railing			
5. Coolers-freezers			
6. Concrete Admixtures			
7. Material			
8. Insulation Forms			
9. Plastics			
10. Deck-Roof			
11. Wall			
12. Sheds			
13. Other			
H. NEW EXTERIOR ENVELOPE PRODUCTS			
1.			
2.			

The products listed below did not demonstrate product approval at plan review. I understand that at the time of inspection of these products, the following information must be available to the inspector on the jobsite; 1) copy of the product approval, 2) the performance characteristics which the product was tested and certified to comply with, 3) copy of the applicable manufacturers installation requirements.

I understand these products may have to be removed if approval cannot be demonstrated during inspection

_____

_____

_____

Contractor or Contractor's Authorized Agent Signature

Print Name

Date

Location

Permit # **(FOR STAFF USE ONLY)**