BOARD OF COUNTY COMMISSIONERS
OFFICE OF

BUILDING & ZONING

COLUMBIA COUNTY, FLORIDA

BUILDING PERMIT RECEIPT

RECEIPT NUMBER / PERMIT NUMBER 000029234 DATE 03/07/2011

APPLICANT PATRICIA JOHNSON

OWNER PATRICIA JOHNSON

CONTRACTOR PATRICIA JOHNSON

PARCEL ID NUMBER 10-4S-16-02853-415 NUMBER OF EXISTING DWELLINGS 0

TYPE OF DEVELOPMENT RE-NEW 28279, SFD

COMMENTS: RE-NEWAL PERMIT # 28279-EXPIRED, 75% COMPLETED
EXISTING PLANS MOVED TO THIS FILE
NEW NOC RECORDED

FEES:

BUILDING PERMIT	0.00	CERTIFICATION FEE	0.00
ZONING FEE		SURCHARGE FEE	0.00
FLOOD ZONE FEE		FLOOD DEVELOPMENT PERMIT	
MOBILE HOME PERMIT		RELOCATION PERMIT	
TRAVEL TRAILER PERMIT		RE-NEW PERMIT	288.75
UTILITY POLE PERMIT		WASTE ASSESSMENT FEE	
FIRE FEE (5 ACRES OR LESS)		CULVERT PERMIT	
FIRE FEE (MORE THAN 5 ACRES)		RENEW PERMIT	

CHECK NUMBER 2213

TOTAL FEES CHARGES 288.75

MAKE CHECKS PAYABLE TO: BCC (Board of County Commissioners)

NOTE: A SEPARATE CHECK IS REQUIRED FOR THE CULVERT WAIVER PERMITS

135 NE HERNANDO AVE.
SUITE B-21
LAKE CITY, FL 32055
Phone: 386-758-1008
Fax: 386-758-2160

Columbia County Building Permit Application

For Office Use Only Application # 0912-16 Date Received 12/2/09 By G Permit # 1776/28279

Zoning Official BLK Date 09.12.09 Flood Zone X Land Use RES, LW-DEN Zoning RSF-2

FEMA Map # N/A Elevation N/A MFE/Stabrow Rd River N/A Plans Examiner WR Date 12/15/09

Comments

☑ NOC ☑ EH ☑ Deed or PA ☑ Site Plan ☐ State Road Info ☐ Parent Parcel #

☐ Dev Permit # ☐ In Floodway ☐ Letter of Auth. from Contractor ☐ F W Comp. letter

IMPACT FEES: EMS Fire Corr Road/Code

School = TOTAL N/A Suspended

Septic Permit No. Fax

Name Authorized Person Signing Permit Patricia M Johnson Phone 386-755-4038

Address 204 SW Dusty Glen Lake City, FL 32024

Owners Name John S and Patricia M Johnson Phone 386-755-4038

911 Address 234 SW Scott Place Lake City, FL 32024

Contractors Name Patricia M Johnson Phone 386-755-4038

Address 204 SW Dusty Glen Lake City FL 32024

Fee Simple Owner Name & Address –

Bonding Co. Name & Address –

Architect/Engineer Name & Address Mark Disoway PO Box 868 Lake City, FL 32056

Mortgage Lenders Name & Address –

Circle the correct power company – FL Power & Light – (Clay Elec) – Suwannee Valley Elec. – Progress Energy

Property ID Number 10-45-16-02853-415 Estimated Cost of Construction $198,000.

Subdivision Name Russwood Estates Lot 15 Block Unit 4 Phase

Driving Directions Branford Hwy (247) Right on Troy ST one mile. Right into Russwood Estates. Russwood Terrace To left on Bethany Place. Emily Glen to end on right Right on Dorothy. Right on Scott Place Number of Existing Dwellings on Property 0

Construction of Wood Frame SFD Total Acreage 3/4 Lot Size 33133 sq ft

Do you need a - Culvert Permit or (Culvert Waiver) or Have an Existing Drive Total Building Height 24'

Actual Distance of Structure from Property Lines - Front ~~46~~ Side ~~39~~ Side ~~34~~ Rear ~~85~~

Number of Stories 1 Heated Floor Area 3124 Total Floor Area 4612 Roof Pitch 7/12

Application is hereby made to obtain a permit to do work and installations as indicated. I certify that no work or installation has commenced prior to the issuance of a permit and that all work be performed to meet the standards of all laws regulating construction in this jurisdiction.

Spoke to John 12/16/09

Columbia County Building Permit Application

TIME LIMITATIONS OF APPLICATION : An application for a permit for any proposed work shall be deemed to have been abandoned 180 days after the date of filing, unless such application has been pursued in good faith or a permit has been issued; except that the building official is authorized to grant one or more extensions of time for additional periods not exceeding 90 days each. The extension shall be requested in writing and justifiable cause demonstrated.

FLORIDA'S CONSTRUCTION LIEN LAW: Protect Yourself and Your Investment
According to Florida Law, those who work on your property or provide materials, and are not paid-in-full, have a right to enforce their claim for payment against your property. This claim is known as a construction lien. If your contractor fails to pay subcontractors or material suppliers or neglects to make other legally required payments, the people who are owed money may look to your property for payment, even if you have paid your contractor in full. This means if a lien is filed against your property, it could be sold against your will to pay for labor, materials or other services which your contractor may have failed to pay.

NOTICE OF RESPONSIBILITY TO BUILDING PERMITEE:
YOU ARE HEREBY NOTIFIED as the recipient of a building permit from Columbia County, Florida, you will be held responsible to the County for any damage to sidewalks and/or road curbs and gutters, concrete features and structures, together with damage to drainage facilities, removal of sod, major changes to lot grades that result in ponding of water, or other damage to roadway and other public infrastructure facilities caused by you or your contractor, subcontractors, agents or representatives in the construction and/or improvement of the building and lot for which this permit is issued. No certificate of occupancy will be issued until all corrective work to these public infrastructures and facilities has been corrected.

WARNING TO OWNER: YOUR FAILURE TO RECORD A NOTICE OF COMMENCMENT MAY RESULT IN YOU PAYING TWICE FOR IMPROVEMENTS TO YOUR PROPERTY. A NOTICE OF COMMENCEMENT MUST BE RECORDED AND POSTED ON THE JOB SITE BEFORE THE FIRST INSPECTION. IF YOU INTEND TO OBTAIN FINANCING, CONSULT WITH YOUR LENDER OR ATTORNEY BEFORE RECORDING YOUR NOTICE OF COMMENCEMENT.

OWNERS CERTIFICATION: I hereby certify that all the foregoing information is accurate and all work will be done in compliance with all applicable laws and regulating construction and zoning. I further understand the above written responsibilities in Columbia County for obtaining this Building Permit.

Patricia M Johnson
Owners Signature

CONTRACTORS AFFIDAVIT: By my signature I understand and agree that I have informed and provided this written statement to the owner of all the above written responsibilities in Columbia County for obtaining this Building Permit.

Patricia M Johnson
Contractor's Signature (Permitee)

Contractor's License Number RR 28 211528
Columbia County
Competency Card Number 337

Affirmed under penalty of perjury to by the Contractor and subscribed before me this 10 **day of** Nov **20**09.
Personally known_____ **or Produced Identification** DL

Vera Lisa Hicks
State of Florida Notary Signature (For the Contractor)

SEAL:

VERA LISA HICKS
Notary Public, State of Florida
My Comm. Expires Aug. 23, 2010
Comm. No. DD 568090

Revised 1-10-08

SUBCONTRACTOR VERIFICATION FORM

APPLICATION NUMBER _____ CONTRACTOR Patricia M. Johnson PHONE 386-755-4038

THIS FORM MUST BE SUBMITTED PRIOR TO THE ISSUANCE OF A PERMIT

In Columbia County one permit will cover all trades doing work at the permitted site. It is REQUIRED that we have records of the subcontractors who actually did the trade specific work under the permit. Per Florida Statute 440 and Ordinance 89-6, a contractor shall require all subcontractors to provide evidence of workers' compensation or exemption, general liability insurance and a valid Certificate of Competency license in Columbia County.

Any changes, the permitted contractor is responsible for the corrected form being submitted to this office prior to the start of that subcontractor beginning any work. Violations will result in stop work orders and/or fines.

good ELECTRICAL ER13012377	Print Name Holly Electric INC License #: ER13012377	Signature Phone #: 386-755-5944	
good MECHANICAL/ A/C _____	Print Name Booter HJ & H/C License #: RA0035027	Signature Phone #: 386 754-6700	
good PLUMBING/ GAS	Print Name Cody Burns Burns Plumbing License #: CFC1427145 (715)	Signature Phone #: 386 623-0509	
good ROOFING	Print Name Darrell Turner License #: CCC 1328465	Signature Phone #: 755-0086	
SHEET METAL	Print Name License #:	Signature Phone #:	
FIRE SYSTEM/ SPRINKLER	Print Name License#:	Signature Phone #:	
SOLAR	Print Name License #:	Signature Phone #:	

Specialty License	License Number	Sub-Contractors Printed Name	Sub-Contractors Signature
MASON			
CONCRETE FINISHER	000218	TONY E. JORDAN SR	Tony E. Jordan Sr
G FRAMING	RG0066597	John D. Morris Jr	
INSULATION	RR282811528	Patricia M Johnson	Patricia M Johnson
STUCCO			
G DRYWALL	000345	Kim Heitzman	Kim Heitzman
PLASTER			
CABINET INSTALLER	RR282811528	Patricia M Johnson	Patricia M Johnson
PAINTING	RR282811528	Patricia M Johnson	Patricia M Johnson
ACOUSTICAL CEILING			
GLASS			
CERAMIC TILE	RR282811528	Patricia M Johnson	Patricia M Johnson
FLOOR COVERING	RR282811528	Patricia M Johnson	Patricia M Johnson
ALUM/VINYL SIDING			
GARAGE DOOR	RR282811528	Patricia M Johnson	Patricia M Johnson
METAL BLDG ERECTOR	—		

F. S. 440.103 Building permits; identification of minimum premium policy.--Every employer shall, as a condition to applying for and receiving a building permit, show proof and certify to the permit issuer that it has secured compensation for its employees under this chapter as provided in ss. 440.10 and 440.38, and shall be presented each time the employer applies for a building permit.

LOT 15

SUBCONTRACTOR VERIFICATION FORM

APPLICATION NUMBER 0912-10 CONTRACTOR Patricia M. Johnson PHONE 386-755-403

THIS FORM MUST BE SUBMITTED PRIOR TO THE ISSUANCE OF A PERMIT

In Columbia County one permit will cover all trades doing work at the permitted site. It is REQUIRED that we have records of the subcontractors who actually did the trade specific work under the permit. Per Florida Statute 440 and Ordinance 89-6, a contractor shall require all subcontractors to provide evidence of workers' compensation or exemption, general liability insurance and a valid Certificate of Competency license in Columbia County.

Any changes, the permitted contractor is responsible for the corrected form being submitted to this office prior to the start of that subcontractor beginning any work. Violations will result in stop work orders and/or fines.

ELECTRICAL ER13012377	Print Name Holly Electric INC License #: ER13012377	Signature [illegible] Phone #: 386-755-5944
MECHANICAL/ A/C _____	Print Name Brazer HTG & H/C License # RA0035027	Signature [illegible] Phone #: 386 754-6700
PLUMBING/ GAS	Print Name Cody Davis Davis Plumbing License #: CFC1427145	Signature [illegible] Phone #: 386 623-0509
ROOFING	Print Name Darrell Turner License #: CCC 1328465	Signature [illegible] Phone #: 755-0086
SHEET METAL	Print Name License #:	Signature Phone #:
FIRE SYSTEM/ SPRINKLER	Print Name License#:	Signature Phone #:
SOLAR	Print Name License #:	Signature Phone #:

Specialty License	License Number	Sub-Contractors Printed Name	Sub-Contractors Signature
MASON	RR2828115 28	Patricia M Johnson	Patricia M. Johnson
CONCRETE FINISHER	000218	TONY E. JORDAN SR	Tony E. Jordan
FRAMING	RG0066597	John D. Norris	[illegible]
INSULATION	RR282811528	Patricia m Johnson	Patricia m Johnson
STUCCO			
DRYWALL	000345	Kim Heitzman	Kim Heitzman
PLASTER			
CABINET INSTALLER	RR282811528	Patricia m Johnson	Patricia m Johnson
PAINTING	RR282811528	Patricia m Johnson	Patricia m Johnson
ACOUSTICAL CEILING			
GLASS			
CERAMIC TILE	RR282811528	Patricia m Johnson	Patricia m Johnson
FLOOR COVERING	RR282811528	Patricia m Johnson	Patricia m Johnson
ALUM/VINYL SIDING			
GARAGE DOOR	RR282811528	Patricia m Johnson	Patricia m Johnson
METAL BLDG ERECTOR	—		

F. S. 440.103 Building permits; identification of minimum premium policy.--Every employer shall, as a condition to applying for and receiving a building permit, show proof and certify to the permit issuer that it has secured compensation for its employees under this chapter as provided in ss. 440.10 and 440.38, and shall be presented each time the employer applies for a building permit.

COLUMBIA COUNTY BUILDING DEPARTMENT
RESIDENTIAL CHECK LIST REQUIRMENTS

MINIMUM PLAN REQUIREMENTS FOR THE FLORIDA BUILDING CODE RESIDENTIAL 2007 ONE (1) AND TWO (2) FAMILY DWELLINGS

ALL REQUIREMENTS ARE SUBJECT TO CHANGE

ALL BUILDING PLANS MUST INDICATE COMPLIANCE with the Current 2007 FLORIDA BUILDING CODES RESIDENTIAL. ALL PLANS OR DRAWINGS SHALL PROVIDE CALCULATIONS AND DETAILS THAT HAVE THE SEAL AND SIGNATURE OF A CERTIFIED ARCHITECT OR ENGINEER REGISTERED IN THE STATE OF FLORIDA, OR ALTERNATE METHODOLOGIES, APPROVED BY THE STATE OF FLORIDA BUILDING COMMISSION FOR ONE-AND-TWO FAMILY DWELLINGS.

FOR DESIGN PURPOSES THE FOLLOWING BASIC WIND SPEEDS ARE PER FIGURE R301.2(4) of the FLORIDA BUILDING CODES RESIDENTIAL (Florida Wind speed map) **SHALL BE USED.**

WIND SPEED LINE SHALL BE DEFINED AS FOLLOWS: THE CENTERLINE OF INTERSTATE 75.

ALL BUILDINGS CONSTRUCTED EAST OF SAID LINE SHALL BE -------- 100 MPH
ALL BUILDINGS CONSTRUCTED WEST OF SAID LINE SHALL BE --------110 MPH
NO AREA IN COLUMBIA COUNTY IS IN A WIND BORNE DEBRIS REGION

	GENERAL REQUIREMENTS: APPLICANT – PLEASE CHECK ALL APPLICABLE BOXES BEFORE SUBMITTAL			Items to Include- Each Box shall be Circled as Applicable		
				Yes	No	N/A
1	Two (2) complete sets of plans containing the following:			✓		
2	All drawings must be clear, concise, drawn to scale, details that are not used shall be marked void			✓		
3	Condition space (Sq. Ft.) 3124		Total (Sq. Ft.) under roof 4612	✓		

Designers name and signature shall be on all documents and a licensed architect or engineer, signature and official embossed seal shall be affixed to the plans and documents as per the FLORIDA BUILDING CODES RESIDENTIAL R101.2.1

Site Plan information including:

4	Dimensions of lot or parcel of land	✓		
5	Dimensions of all building set backs	✓		
6	Location of all other structures (include square footage of structures) on parcel, existing or proposed well and septic tank and all utility easements.	✓		
7	Provide a full legal description of property.	✓		

Wind-load Engineering Summary, calculations and any details required

	GENERAL REQUIREMENTS: APPLICANT – PLEASE CHECK ALL APPLICABLE BOXES BEFORE SUBMITTAL	Items to Include- Each Box shall be Circled as Applicable		
8	Plans or specifications must show compliance with FBCR Chapter 3	IIIIII	IIIII	IIIIII
		YES	NO	N/A
9	Basic wind speed (3-second gust), miles per hour	✓		
10	(Wind exposure – if more than one wind exposure is used, the wind exposure and applicable wind direction shall be indicated)	✓		
11	Wind importance factor and nature of occupancy	✓		
12	The applicable internal pressure coefficient, Components and Cladding	✓		
13	The design wind pressure in terms of psf (kN/m²), to be used for the design of exterior component, cladding materials not specifally designed by the registered design professional.	✓		

Elevations Drawing including:

14	All side views of the structure	✓		
15	Roof pitch	✓		
16	Overhang dimensions and detail with attic ventilation	✓		
17	Location, size and height above roof of chimneys			✓
18	Location and size of skylights with Florida Product Approval			✓
18	Number of stories	✓		
20A	Building height from the established grade to the roofs highest peak	✓		

Floor Plan including:

20	Dimensioned area plan showing rooms, attached garage, breeze ways, covered porches, deck, balconies	✓		
21	Raised floor surfaces located more than 30 inches above the floor or grade			✓
22	All exterior and interior shear walls indicated	✓		
23	Shear wall opening shown (Windows, Doors and Garage doors)	✓		
24	Emergency escape and rescue opening shown in each bedroom (net clear opening shown)	✓		
25	Safety glazing of glass where needed	✓		
26	Fireplaces types (gas appliance) (vented or non-vented) or wood burning with Hearth (see chapter 10 of FBCR)	✓		
27	Stairs with dimensions (width, tread and riser and total run) details of guardrails, Handrails (see FBCR SECTION 311)			✓
28	Identify accessibility of bathroom (see FBCR SECTION 322)	✓		

All materials placed within opening or onto/into exterior walls, soffits or roofs shall have Florida product approval number and mfg. installation information submitted with the plan (see Florida product approval form)

GENERAL REQUIREMENTS: APPLICANT – PLEASE CHECK ALL APPLICABLE BOXES BEFORE SUBMITTAL	Items to Include- Each Box shall be Circled as Applicable

FBCR 403: Foundation Plans

		YES	NO	N/A
29	Location of all load-bearing walls footings indicated as standard, monolithic, dimensions, size and type of reinforcing.	✓		
30	All posts and/or column footing including size and reinforcing	✓		
31	Any special support required by soil analysis such as piling.			✓
32	Assumed load-bearing valve of soil 1000 Pound Per Square Foot	✓		
33	Location of horizontal and vertical steel, for foundation or walls (include # size and type)	✓		

FBCR 506: CONCRETE SLAB ON GRADE

34	Show Vapor retarder (6mil. Polyethylene with joints lapped 6 inches and sealed)	✓		
35	Show control joints, synthetic fiber reinforcement or welded fire fabric reinforcement and Supports	✓		

FBCR 320: PROTECTION AGAINST TERMITES

36	Indicate on the foundation plan if soil treatment is used for subterranean termite prevention or submit other approved termite protection methods. **Protection shall be provided by registered termiticides**	✓		

FBCR 606: Masonry Walls and Stem walls (load bearing & shear Walls)

37	Show all materials making up walls, wall height, and Block size, mortar type	✓		
38	Show all Lintel sizes, type, spans and tie-beam sizes and spacing of reinforcement	✓		

Metal frame shear wall and roof systems shall be designed, signed and sealed by Florida Prof. Engineer or Architect

Floor Framing System: First and/or second story

39	Floor truss package shall including layout and details, signed and sealed by Florida Registered Professional Engineer			✓
40	Show conventional floor joist type, size, span, spacing and attachment to load bearing walls, stem walls and/or priers			✓
41	Girder type, size and spacing to load bearing walls, stem wall and/or priers			✓
42	Attachment of joist to girder			✓
43	Wind load requirements where applicable			✓
44	Show required under-floor crawl space			✓
45	Show required amount of ventilation opening for under-floor spaces			✓
46	Show required covering of ventilation opening			✓
47	Show the required access opening to access to under-floor spaces			✓
	Show the sub-floor structural panel sheathing type, thickness and fastener schedule on the edges &			✓

48	intermediate of the areas structural panel sheathing			✓
49	Show Draftstopping, Fire caulking and Fire blocking			✓
50	Show fireproofing requirements for garages attached to living spaces, per FBCR section 309			✓
51	Provide live and dead load rating of floor framing systems (psf).			✓

FBCR CHAPTER 6 WOOD WALL FRAMING CONSTRUCTION

	GENERAL REQUIREMENTS: APPLICANT – PLEASE CHECK ALL APPLICABLE BOXES BEFORE SUBMITTAL	Items to Include- Each Box shall be Circled as Applicable		
		YES	NO	N/A
52	Stud type, grade, size, wall height and oc spacing for all load bearing or shear walls	✓		
53	Fastener schedule for structural members per table FBCR 602.3 are to be shown	✓		
54	Show Wood structural panel's sheathing attachment to studs, joist, trusses, rafters and structural members, showing fastener schedule attachment on the edges & intermediate of the areas structural panel sheathing	✓		
55	Show all required connectors with a max uplift rating and required number of connectors and oc spacing for continuous connection of structural walls to foundation and roof trusses or rafter systems	✓		
56	Show sizes, type, span lengths and required number of support jack studs, king studs for shear wall opening and girder or header per FBCR Table 502.5 (1)	✓		
57	Indicate where pressure treated wood will be placed	✓		
58	Show all wall structural panel sheathing, grade, thickness and show fastener schedule for structural panel sheathing edges & intermediate areas	✓		
59	A detail showing gable truss bracing, wall balloon framing details or/ and wall hinge bracing detail	✓		

FBCR :ROOF SYSTEMS:

60	Truss design drawing shall meet section FBCR 802.10 Wood trusses	✓		
61	Include a layout and truss details, signed and sealed by Florida Professional Engineer	✓		
62	Show types of connector's assemblies' and resistance uplift rating for all trusses and rafters	✓		
63	Show gable ends with rake beams showing reinforcement or gable truss and wall bracing details			✓
64	Provide dead load rating of trusses	✓		

FBCR 802:Conventional Roof Framing Layout

65	Rafter and ridge beams sizes, span, species and spacing			✓
66	Connectors to wall assemblies' include assemblies' resistance to uplift rating			✓
67	Valley framing and support details			✓
68	Provide dead load rating of rafter system			✓

FBCR Table 602,3(2) & FBCR 803 ROOF SHEATHING

69	Include all materials which will make up the roof decking, identification of structural panel sheathing, grade, thickness	✓		
70	Show fastener Size and schedule for structural panel sheathing on the edges & intermediate areas	✓		

FBCR ROOF ASSEMBLIES FRC Chapter 9

71	Include all materials which will make up the roof assembles covering			
72	Submit Florida Product Approval numbers for each component of the roof assembles covering			

FBCR Chapter 11 Energy Efficiency Code for residential building

Residential construction shall comply with this code by using the following compliance methods in the FBCR chapter11 Residential buildings compliance methods. *Two of the required forms are to be submitted, showing dimensions condition area equal to the total condition living space area*

	GENERAL REQUIREMENTS: APPLICANT – PLEASE CHECK ALL APPLICABLE BOXES BEFORE SUBMITTAL	Items to Include- Each Box shall be Circled as Applicable		
		YES	NO	N/A
73	Show the insulation R value for the following areas of the structure	✓		
74	Attic space	✓		
75	Exterior wall cavity	✓		
76	Crawl space			✓

HVAC information

77	Submit two copies of a Manual J sizing equipment or equivalent computation study			
78	Exhaust fans locations in bathrooms			
79	Show clothes dryer route and total run of exhaust duct			

Plumbing Fixture layout shown

80	All fixtures waste water lines shall be shown on the foundation plan			✓
81	Show the location of water heater	✓		

Private Potable Water

82	Pump motor horse power			
83	Reservoir pressure tank gallon capacity			
84	Rating of cycle stop valve if used			

Electrical layout shown including

85	Switches, outlets/receptacles, lighting and all required GFCI outlets identified	✓		
86	Ceiling fans	✓		
87	Smoke detectors & Carbon dioxide detectors	✓		
88	Service panel, sub-panel, location(s) and total ampere ratings	✓		
89	On the electrical plans identify the electrical service overcurrent protection device for the main electrical service. This device shall be installed on the exterior of structures to serve as a disconnecting means for the utility company electrical service. Conductors used from the exterior disconnecting means to a panel or sub panel shall have four-wire conductors, of which one conductor shall be used as an equipment ground. Indicate if the utility company service entrance cable will be of the overhead or underground type.			

90	Appliances and HVAC equipment and disconnects	✓		
91	Arc Fault Circuits (AFCI) in bedrooms	✓		

Disclosure Statement for Owner Builders *If you as the applicant will be acting as an owner/builder under section 489.103(7) of the Florida Statutes, submit the required owner builder disclosure statement form.*

Notice Of Commencement

A notice of commencement form **recorded** in the Columbia County Clerk Office is required to be filed with the building department Before Any Inspections can be preformed.

GENERAL REQUIREMENTS: APPLICANT – PLEASE CHECK ALL APPLICABLE BOXES BEFORE SUBMITTAL	Items to Include- Each Box shall be Circled as Applicable

THE FOLLOWING ITEMS MUST BE SUBMITTED WITH BUILDING PLANS

		YES	NO	N/A
92	**Building Permit Application** A current Building Permit Application form is to be completed and submitted for all residential projects			
93	**Parcel Number** The parcel number (Tax ID number) from the Property Appraiser (386) 758-1084 is required. A copy of property deed is also requested			
94	**Environmental Health Permit or Sewer Tap Approval** A copy of a approved Columbia County Environmental Health (386) 758-1058			
95	**City of Lake City** A permit showing an approved waste water sewer tap			
96	**Toilet facilities shall be provided for all construction sites**			
97	**Town of Fort White** (386) 497-2321 If the parcel in the application for building permit is within the Corporate city limits of Fort White an approval land use development letter issued by the Town of Fort is required to be submitted with the application for a building permit.			
98	**Flood Information:** All projects within the Floodway of the Suwannee or Santa Fe Rivers shall require permitting through the Suwannee River Water Management District, before submitting a application to this office. Any project located within a flood zone where the base flood elevation (100 year flood) has been established shall meet the requirements of Section 8.5.2 of the Columbia County Land Development Regulations. Any project located within a flood zone where the base flood elevation has not been established (Zone A) shall meet the requirements of Section 8.5.3 of the Columbia County Land Development Regulations			
99	CERTIFIED FINISHED FLOOR ELEVATIONS will be required on any project where the base flood elevation (100 year flood) has been established			
100	A development permit will also be required. Development permit cost is **$50.00**			
101	**Driveway Connection:** If the property does not have an existing access to a public road, then an application for a culvert permit (**$25.00**) must be made. If the applicant feels that a culvert is not needed, they may apply for a culvert waiver (**$50.00**). All culvert waivers are sent to the Columbia County Public Works Department for approval or denial.			
102	**911 Address:** If the project is located in an area where a 911 address has not been issued, then application for a 911address must be applied for and **received** through the Columbia County Emergency Management Office of 911 Addressing Department (386) 758-1125			

Section R101.2.1 of the Florida Building Code Residential:

The provisions of Chapter 1, Florida Building Code, Building shall govern the administration and enforcement of the Florida Building Code, Residential.

Section 105 of the Florida Building Code defines the:

Time limitation of application.

An application for a permit for any proposed work shall be deemed to have been abandoned 180 days after the date of filing, unless such application has been pursued in good faith or a permit has been issued; except that the building official is authorized to grant one or more extensions of time for additional periods not exceeding 90 days each. The extension shall be requested in writing and justifiable cause demonstrated.

Single-family residential dwelling.

Section 105.3.4 A building permit for a single-family residential dwelling must be issued within 30 working days of application therefor unless unusual circumstances require a longer time for processing the applicati or unless the permit application fails to satisfy the Florida Building Code or the enforcing agency's laws or ordinances.

Permit intent.

Section 105.4.1: A permit issued shall be constructed to be a license to proceed with the work and not as authority to violate, cancel, alter or set aside any of the provisions of the technical codes, nor shall issuance a permit prevent the building official from thereafter requiring a correction of errors in plans, construction or violations of this code. Every permit issued shall become invalid unless the work authorized by such permit is commenced within six months after its issuance, or if the work authorized by such permit is suspended or abandoned for a period of six months after the time the work is commenced.

If work has commenced.

Section 105.4.1.1: If work has commenced and the permit is revoked, becomes null and void, or expires because of lack of progress or abandonment, a new permit covering the proposed construction shall be obtained before proceeding with the work.

New Permit.

Section 105.4.1.2: If a new permit is not obtained within 180 days from the date the initial permit became nu and void, the building official is authorized to require that any work which has been commenced or completed be removed from the building site. Alternately, a new permit may be issued on application, providing the work in place and required to complete the structure meets all applicable regulations in effect at the time the initial permit became null and void and any regulations which may have become effective between the date of expiration and the date if issuance of the new permit.

Work Shall Be:

Section 105.4.1.3: Work shall be considered to be in active progress when the permit has received an approved inspection within 180 days. This provision shall not be applicable in case of civil commotion or strike or when the building work is halted due directly to judicial injunction, order or similar process.

The Fee:

Section 105.4.1.4: The fee for renewal reissuance and extension of a permit shall be set forth by the administrative authority.

When the submitted application is approved for permitting the applican will be notified by phone as to the date and time a building permit will b prepared and issued by the Columbia County Building & Zoning Department

09-0581-N

STATE OF FLORIDA
DEPARTMENT OF HEALTH AND REHABILITATIVE SERVICES
ONSITE SEWAGE DISPOSAL SYSTEM
APPLICATION FOR CONSTRUCTION PERMIT
Authority: Chapter 381, FS & Chapter 10D-6, FAC

PERMIT # Ap943095
DATE PAID 11/19/2009
FEE PAID $ 310.00
RECEIPT # 12-PPD-1205016
CR # 09-4742

APPLICATION FOR:
[ ] New System [ ] Existing System [ ] Holding Tank [ ] Temporary/Experimental System
[ ] Repair [ ] Abandonment [ ] Other(Specify) _____

APPLICANT: JOHN & PATRICA JOHNSON TELEPHONE: 755-4038

AGENT: JOHN JOHNSON CONSTRUCTION

MAILING ADDRESS: 204 SW DUSTY GLENN CITY: LAKE CITY STATE: FL ZIP: 32024

==========

TO BE COMPLETED BY APPLICANT OR APPLICANT'S AUTHORIZED AGENT. ATTACH BUILDING PLAN AND TO-SCALE SITE PLAN SHOWING PERTINENT FEATURES REQUIRED BY CHAPTER 10D-6, FLORIDA ADMINISTRATIVE CODE.

==========

PROPERTY INFORMATION [IF LOT IS NOT IN A RECORDED SUBDIVISION, ATTACH LEGAL DESCRIPTION OR DEED]

LOT: 15 BLOCK: _____ SUBDIVISION: RUSSWOOS EST. UNIT 4 DATESUBD: 1/2007

PROPERTY ID #: 10-4S-16-02853-415 [Section/Township/Range/Parcel] ZONING: RES

PROPERTY SIZE: 0.76 ACRES [Sqft/43560] PROPERTY WATER SUPPLY: [X] PRIVATE [ ] PUBLIC

PROPERTY STREET ADDRESS: 234 SW SCOTT PLACE

DIRECTIONS TO PROPERTY: 90 WEST TURN LEFT ON CR 252, TURN RIGHT ON TROY RD. TURN RIGHT ON RUSSWOOD TERR. TURN LEFT ON EMILY GLENN, TURN RIGHT ON DOROTHY TERR. TURN RIGHT ON SCOTT PLACE TO END ON RIGHT.

BUILDING INFORMATION [X] RESIDENTIAL [ ] COMMERCIAL

Unit No	Type of Establishment	No. of Bedrooms	Building Area Sqft	# Persons Served	Business Activity For Commercial Only
1	HOUSE	4	3236	4	
2					
3					
4					

[N] Garbage Grinders/Disposals [N] Spas/Hot Tubs [N] Floor/Equipment Drains
[N] Ultra-low Volume Flush Toilets [N] Other (Specify) _____

APPLICANT'S SIGNATURE: John S Johnson DATE: 11-18-09

HRS-H Form 4015 March 1992 (Obsoletes Previous Editions Which May Not Be Used) Page 1 of 3

RECEIVED 11/18/09 ENTERED KSF

Application for Onsite Sewage Disposal System Construction Permit. Part II Site Plan

Permit Application Number: 09-0581-N

ALL CHANGES MUST BE APPROVED BY THE COUNTY HEALTH UNIT

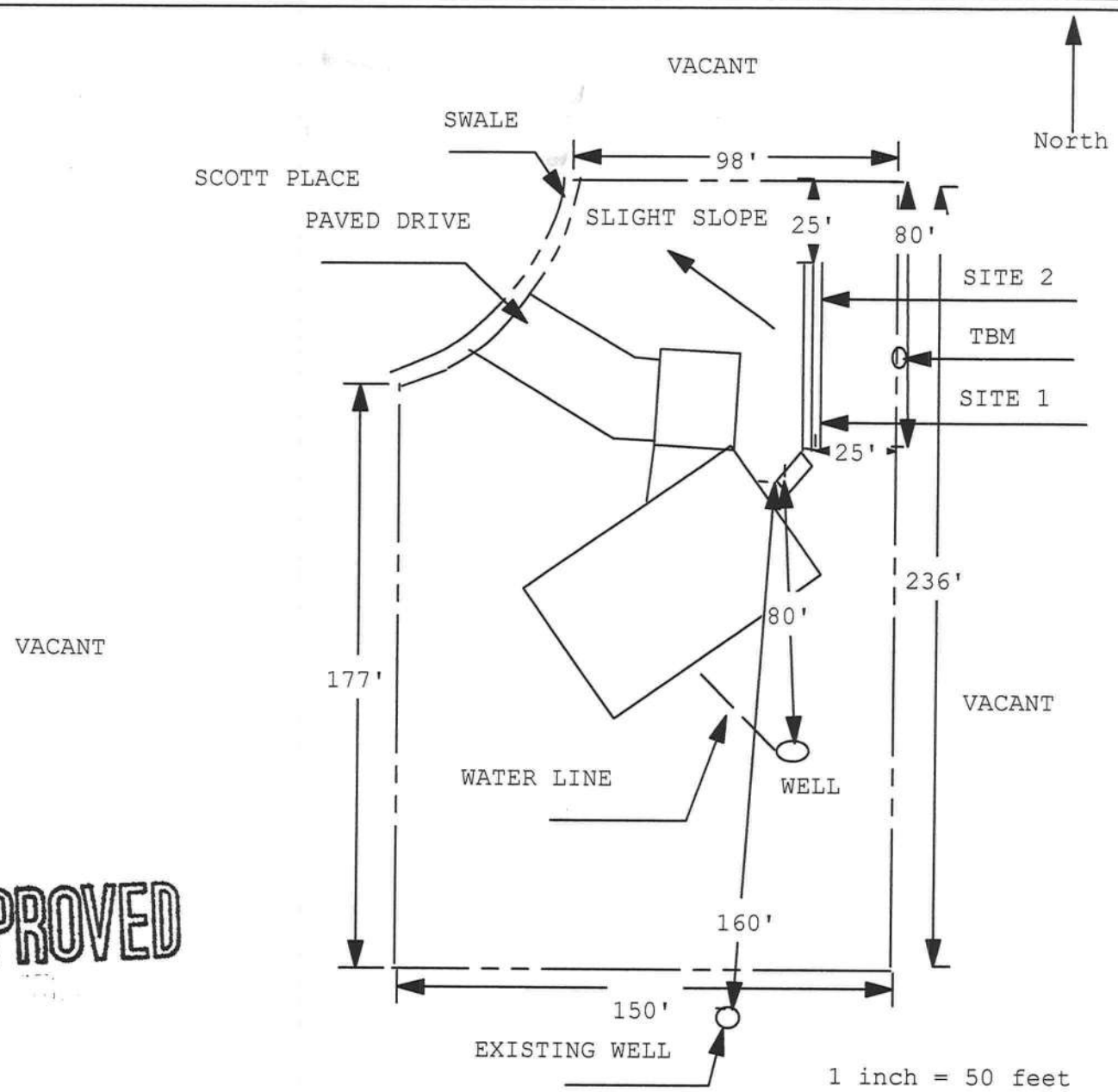

APPROVED

Site Plan Submitted By [signature] Date 11/18/09

Plan Approved X Not Approved ____ Date 11/25/09

By [signature] Celeste Vail CPHU

Notes: ____

THIS INSTRUMENT WAS PREPARED BY:

TERRY McDAVID
POST OFFICE BOX 1328
LAKE CITY, FL 32056-1328

Recording Fee $ 18.50
Documentary Stamp $ 1,274.00

RETURN TO:

TERRY McDAVID
POST OFFICE BOX 1328
LAKE CITY, FL 32056-1328
07-84

Inst:2007004456 Date:02/23/2007 Time:11:04
Doc Stamp-Deed : 1274.00
D.T. DC,P.DeWitt Cason,Columbia County B:1111 P:2014

Property Appraiser's
Parcel Identification No.
02853-415; 416; 417;
423; 424; 426; 427

WARRANTY DEED

THIS INDENTURE, made this 22nd day of February, 2007, BETWEEN LOID RUSSELL BAILEY and his wife, DOROTHY H. BAILEY, whose post office address is 2016 SW Sisters Welcome Road, Lake City, Florida 32025, of the County of Columbia, State of Florida, grantor*, and JOHN S. JOHNSON and his wife, PATRICIA M. JOHNSON, whose post office address is 204 SW Dusty Glen, Lake City, FL 32024, of the County of Columbia, State of Florida, grantee*.

WITNESSETH: that said grantor, for and in consideration of the sum of Ten Dollars ($10.00), and other good and valuable considerations to said grantor in hand paid by said grantee, the receipt whereof is hereby acknowledged, has granted, bargained and sold to the said grantee, and grantee's heirs and assigns forever, the following described land, situate, lying and being in Columbia County, Florida, to-wit:

> Lots 15, 16, 17, 23, 24, 26 and 27, RUSSWOOD ESTATES UNIT 4, a subdivision according to the plat thereof recorded in Plat Book 9, Pages 2 & 3, of the public records of Columbia County, Florida.
>
> SUBJECT TO: Restrictions, easements and outstanding mineral rights of record, if any, and taxes for the current year.

and said grantor does hereby fully warrant the title to said land, and will defend the same against the lawful claims of all persons

4, a subdivision according to the plat thereof recorded in Plat Book 9, Pages 2 & 3, of the public records of Columbia County, Florida.

SUBJECT TO: Restrictions, easements and outstanding mineral rights of record, if any, and taxes for the current year.

and said grantor does hereby fully warrant the title to said land, and will defend the same against the lawful claims of all persons whomsoever.

*"Grantor" and "grantee" are used for singular or plural, as context requires.

IN WITNESS WHEREOF, grantor has hereunto set grantor's hand and seal the day and year first above written.

Inst:2007004456 Date:02/23/2007 Time:11:04
Doc Stamp-Deed : 1274.00
_____DC,P.DeWitt Cason,Columbia County B:1111 P:2015

Signed, sealed and delivered in our presence:

DeEtte F. Brown
(First Witness)
DeEtte F. Brown
Printed Name

(Second Witness)
Crystal L. Brunner
Printed Name

Loid Russell Bailey (SEAL)
LOID RUSSELL BAILEY

Dorothy H. Bailey (SEAL)
DOROTHY H. BAILEY

STATE OF FLORIDA
COUNTY OF COLUMBIA

The foregoing instrument was acknowledged before me this 22nd day of February, 2007, by LOID RUSSELL BAILEY and his wife, DOROTHY H. BAILEY, who are personally known to me and who did not take an oath.

My Commission Expires:

DeEtte F. Brown
Notary Public

DE ETTE F. BROWN
MY COMMISSION # DD 578151
EXPIRES: October 22, 2010
Bonded Thru Notary Public Underwriters

"RUSSWOOD ESTATES, UNIT 4"

A SUBDIVISION OF PART OF SECTION 10, TOWNSHIP 4 SOUTH, RANGE 16 EAST, COLUMBIA COUNTY, FLORIDA

PLAT BOOK 9 PAGE 3
SHEET 2 OF 2.

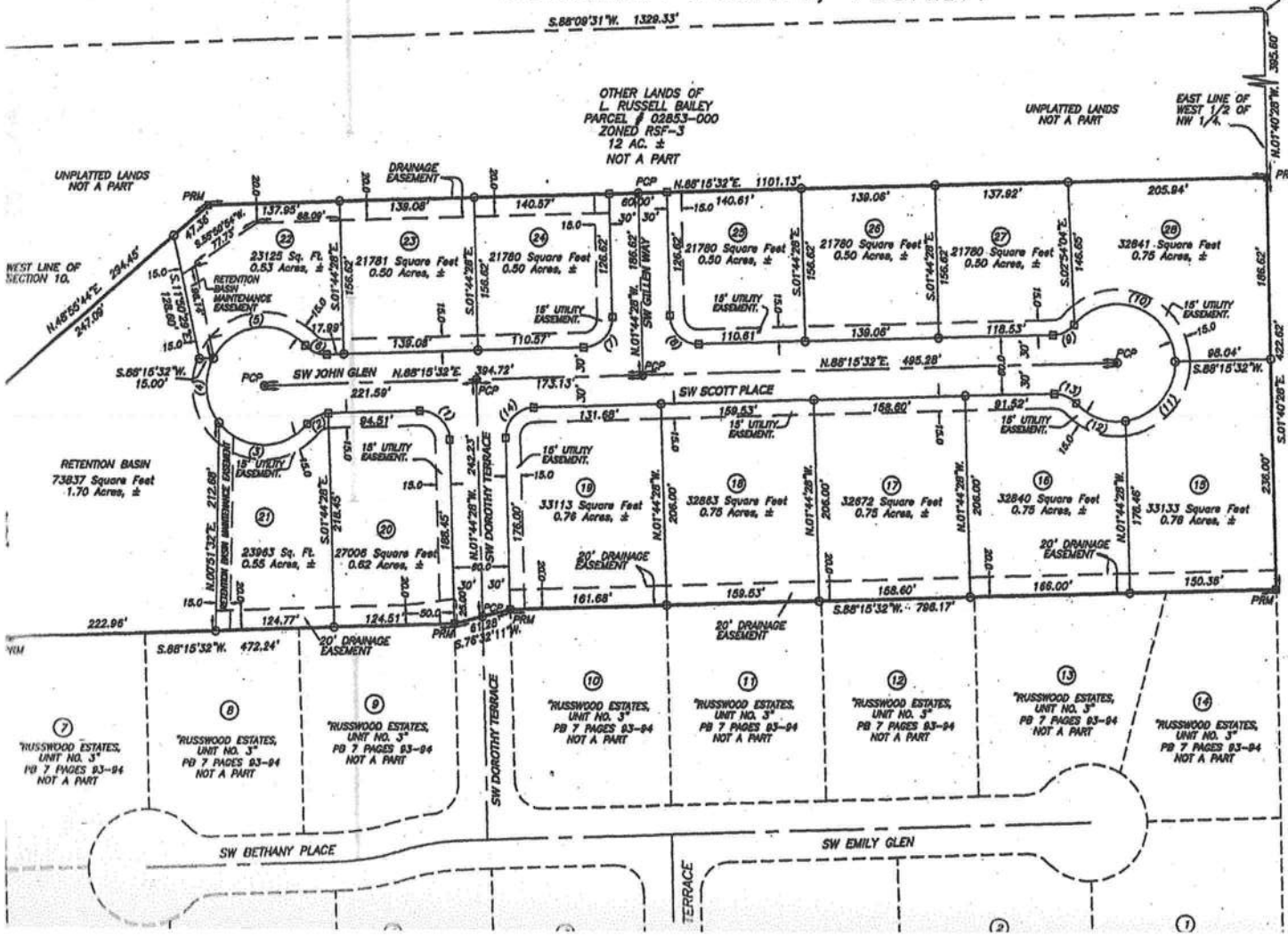

SEE SHEET 1 OF 2 FOR DESCRIPTION.

CURVE TABLE

NO.	RADIUS	DELTA	ARC	TANGENT	CHORD	CHORD BEARING
1	30.00'	90°00'00"	47.12'	30.00'	42.43'	S.46°44'28"E.
2	30.00'	48°11'23"	25.23'	13.42'	24.49'	N.64°09'51"E.
3	60.00'	101°18'59"	106.12'	73.22'	92.82'	N.89°15'51"W.
4	60.00'	66°51'24"	70.01'	39.61'	66.11'	N.05°10'10"W.
5	60.00'	108°11'23"	113.30'	82.87'	97.20'	N.82°21'13"E.
6	30.00'	48°11'23"	25.23'	13.42'	24.49'	N.67°38'47"W.
7	30.00'	90°00'00"	47.12'	30.00'	42.43'	S.43°15'32"W.
8	30.00'	90°00'00"	47.12'	30.00'	42.43'	N.46°44'28"W.
9	30.00'	48°11'23"	25.23'	13.42'	24.49'	S.64°09'51"W.
10	60.00'	138°11'23"	144.71'	157.08'	112.10'	S.70°50'09"E.
11	60.00'	82°54'56"	86.83'	53.00'	79.45'	S.39°43'00"W.
12	60.00'	55°16'27"	57.88'	31.42'	55.66'	N.71°11'19"W.
13	30.00'	48°11'23"	25.23'	13.42'	24.49'	S.67°38'47"E.
14	30.00'	90°00'00"	47.12'	30.00'	42.43'	N.43°15'32"E.

BUILDING SETBACKS / MINIMUM YARD REQUIREMENTS:
FRONT – 25'
SIDE – 10' FOR EACH SIDE YARD.
REAR – 15'

STREET LIGHTING, IF REQUIRED BY COLUMBIA COUNTY BOARD OF COUNTY COMMISSIONERS, WILL BE INSTALLED AND CONSTRUCTED BY THE SUBDIVIDER ACCORDING TO THE STANDARDS OF SAID BOARD PURSUIT TO SECTION 5.26.3.6 COLUMBIA COUNTY LAND DEVELOPMENT REGULATIONS.

SYMBOL LEGEND

- CONCRETE MONUMENT FOUND
- 4"X4" CONCRETE MONUMENT SET, LB 4708
- IRON PIN OR PIPE FOUND
- 5/8" IRON ROD SET, LB 4708.
- —x— WIRE FENCE
- —E— ELECTRIC UTILITY LINE (OVERHEAD)
- —UGE— UNDERGROUND ELECTRIC SERVICE

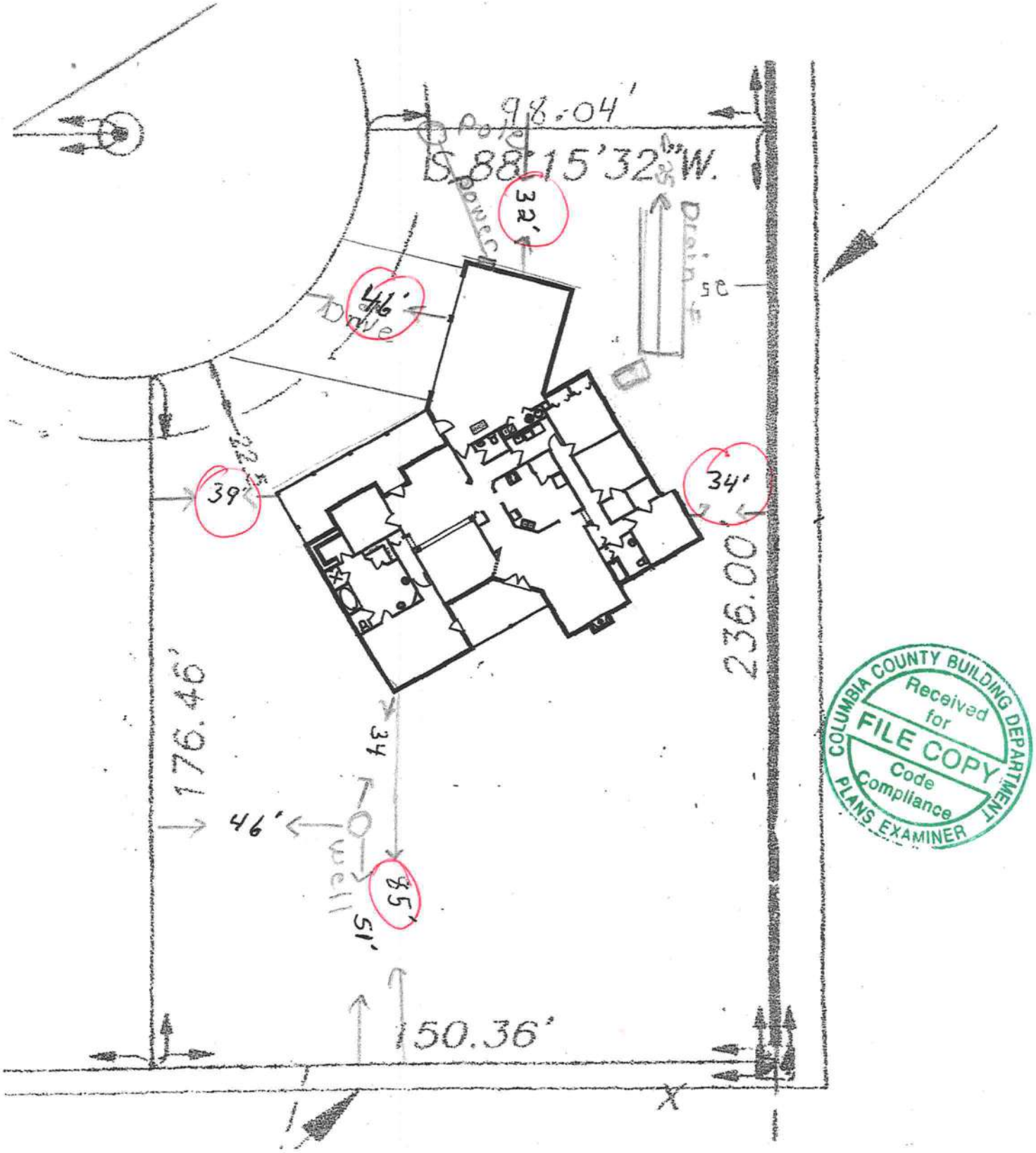

Russwood Estates
Unit 4 Lot 15

LYNCH WELL DRILLING, INC.
173 SW YOUNG PLACE
LAKE CITY, FL 32025

Invoice

Date	Invoice #
11/18/2009	10829

Bill To
John Johnson 204 SW Dusty Glen Lake City, Fl 32024

Due Date
11/25/2009

Quantity	Description	Rate	Amount
1	4" steel casing well to 100' with 1 1/2 HP pump, 1 1/4 galv. drop pipe, 81 gallon bladder tank		
30	4" well over 100'(Rustwood Est. lot 15)(well 130 water 73 pump set 94)		

COLUMBIA COUNTY BUILDING DEPARTMENT
Received for FILE COPY
Code Compliance
PLANS EXAMINER

Every 30 days 1.5% finance charges will be added to balance Well 130Water depth 73, pump set 94

Total

Phone #	Fax #	E-Mail	Web Site
(386) 752-6677	(386) 752-1477	lynchwell@bizsea.rr.com	lynchwelldrilling.com

PRODUCT APPROVAL SPECIFICATION SHEET

Location: **Project Name:**

As required by Florida Statute 553.842 and Florida Administrative Code 9B-72, please provide the information and the product approval number(s) on the building components listed below if they will be utilized on the construction project for which you are applying for a building permit on or after April 1, 2004. We recommend you contact your local product supplier should you not know the product approval number for any of the applicable listed products. More information about statewide product approval can be obtained at www.floridabuilding.org

Category/Subcategory	Manufacturer	Product Description	Approval Number(s)
A. EXTERIOR DOORS			FL 4242-R1
1. Swinging			
2. Sliding			
3. Sectional			
4. Roll up			
5. Automatic			
6. Other			
B. WINDOWS			
1. Single hung			FL. 5108
2. Horizontal Slider			FL. 5451
3. Casement			
4. Double Hung			
5. Fixed			FL. 5418
6. Awning			
7. Pass -through			
8. Projected			
9. Mullion			
10. Wind Breaker			
11 Dual Action			
12. Other			
C. PANEL WALL			
1. Siding			FL. 889-R2
2. Soffits			FL 4899
3. EIFS			
4. Storefronts			
5. Curtain walls			
6. Wall louver			
7. Glass block			FL 3820-R1
8. Membrane			
9. Greenhouse			
10. Other			
D. ROOFING PRODUCTS			
1. Asphalt Shingles			FL. 586-R2
2. Underlayments			FL 1814-R1
3. Roofing Fasteners			
4. Non-structural Metal Rf			
5. Built-Up Roofing			
6. Modified Bitumen			
7. Single Ply Roofing Sys			
8. Roofing Tiles			
9. Roofing Insulation			
10. Waterproofing			
11. Wood shingles /shakes			
12. Roofing Slate			

Category/Subcategory (cont.)	Manufacturer	Product Description	Approval Number(s)
13. Liquid Applied Roof Sys			
14. Cements-Adhesives – Coatings			FL. 1960-R1
15. Roof Tile Adhesive			
16. Spray Applied Polyurethane Roof			
17. Other			
E. SHUTTERS			
1. Accordion			
2. Bahama			
3. Storm Panels			
4. Colonial			
5. Roll-up			
6. Equipment			
7. Others			
F. SKYLIGHTS			
1. Skylight			FL 451-R1
2. Other			
G. STRUCTURAL COMPONENTS			
1. Wood connector/anchor			FL. 474-R1
2. Truss plates			
3. Engineered lumber			FL 1008-R1
4. Railing			
5. Coolers-freezers			
6. Concrete Admixtures			
7. Material			
8. Insulation Forms			
9. Plastics			
10. Deck-Roof			
11. Wall			
12. Sheds			
13. Other			
H. NEW EXTERIOR ENVELOPE PRODUCTS			
1.			
2.			

The products listed below did not demonstrate product approval at plan review. I understand that at the time of inspection of these products, the following information must be available to the inspector on the jobsite; 1) copy of the product approval, 2) the performance characteristics which the product was tested and certified to comply with, 3) copy of the applicable manufacturers installation requirements.

I understand these products may have to be removed if approval cannot be demonstrated during inspection

Patricia M Johnson

Contractor or Contractor's Authorized Agent Signature

Patricia M Johnson

Print Name

Date

Location

Permit # (FOR STAFF USE ONLY)

MI HOME PRODUCTS

- PRIME ALUMINUM WINDOWS -

INSTALLATION INSTRUCTIONS FOR "NAIL FIN" PRODUCTS

MI Home Products appreciates your recent purchase of a maintenance free prime window, which will not rust, rot, mildew, or warp. This is a quality product that left our factory in good condition – proper handling and installation are just as important as good design and workmanship. Please follow these recommendations to allow this product to complete its function.

1. Handle units one at a time in the closed and locked position and take care not to scratch frame or glass or to bend the nailing fin.

2. Set unit plumb and square into opening and make sure that there is 3/16" ± 1/16" clearance around the frame. Fasten unit into opening in the closed and locked position, making sure that fasteners are screwed in straight in order to avoid twisting or bowing of the frame. Make sure that sill is straight and level. Check operation of unit before any and all fasteners are set.

3. Use # 8 sheet metal or wood screws with a minimum of 1" penetration into the framing (stud). Place first screws (two at each corner) 3" from end of fin. For positive and negative DPs (design pressures) up to **35**, do not exceed **24"** spacing of additional screws. For DPs from **35.1** to **50**, do not exceed **18"**. Install load bearing shim adjacent to each anchor. Use shim where space exceeds 1/16".

4. Flash over head and caulk outside perimeter in accordance with code requirements and good installation practices.

5. Fill voids between frame and construction with loose batten type insulation or <u>non-expanding</u> aerosol foam specifically formulated for windows and doors to eliminate drafts. The use of <u>expanding</u> aerosol type insulating foam, which can bow the frame, waives all stated warranties.

6. Remove plaster, mortar, paint and any other debris that may have collected on the unit and make sure that sash/vent tracks and interlocks are also clear. Do not use abrasives, solvents, ammonia, vinegar, alkaline, or acid solutions for clean-up, especially with insulated glass units as their use could cause chemical breakdown of the glass seal. Take care not to scratch glass; scratches severely weaken glass and it could eventually break from thermal expansion and contraction. Clean units with water and mild detergent as you would you automobile.

CAUTION -

MI Home Products or its representatives are unable to control and cannot assume responsibility for the selection and placement of their products in a building or structure in a manner required by laws, statutes, and/or building codes. The purchaser is solely responsible for knowledge of and adherence to the same. MI Home Products window products are not provided with safety glazing unless specifically ordered with such. Many laws and codes require safety glazing near doors, bathtubs, and shower enclosures. Also be aware of emergency egress code requirements.

Corporate Headquarters:
650 West Market St.
Gratz, PA 17030-0370
(717) 365-3300

MODELS: 73, 75 (25 GA. STEEL SKIN)
MODELS: 84A, 94 (24 GA. STEEL SKIN)

REV	DATE	DESCRIPTION
02	2/1/2000	ADDED JAMB ATTACHMENT INFORMATION
03	3/16/2000	ADDED LHR TRACK OPTION NOTE: DEL. M/N 82/90
04	11/13/2000	QTY.(1) WAS (2) FOR TRACK BOLTS

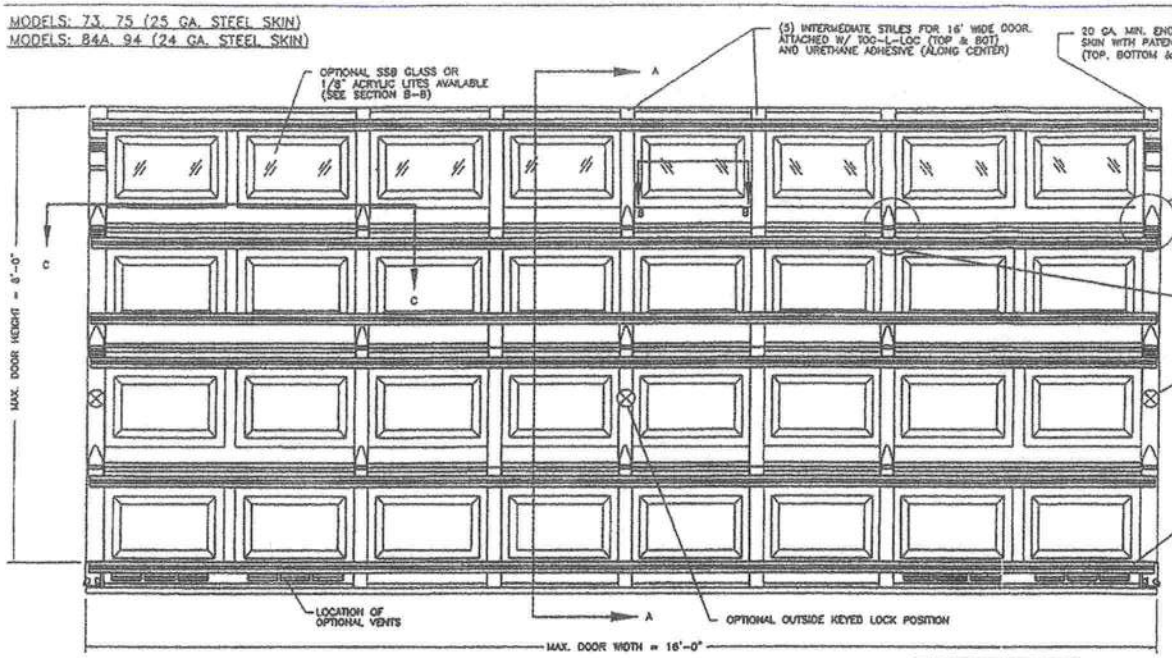

INSIDE ELEVATIONS

NOTE 1:
DOORS UP TO 7'-0" HIGH CONSIST OF (4) SECTIONS (SHOWN).
DOORS OVER 7'-0" HIGH CONSIST OF (5) SECTIONS (NOT SHOWN).

NOTE 2: THE DESIGN OF THE SUPPORTING STRUCTURAL ELEMENTS SHALL BE THE RESPONSIBILITY OF THE PROFESSIONAL OF RECORD FOR THE BUILDING OR STRUCTURE AND IN ACCORDANCE WITH CURRENT BUILDING CODES FOR THE LOADS LISTED ON THIS DRAWING.

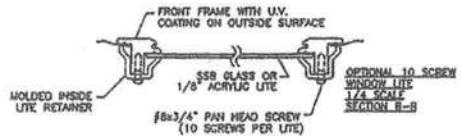

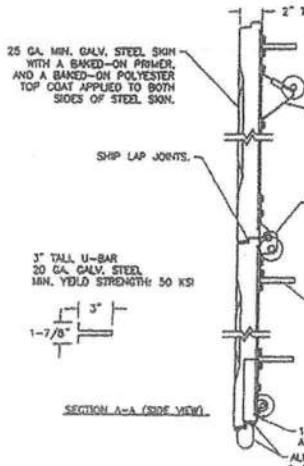

SECTION A-A (SIDE VIEW)

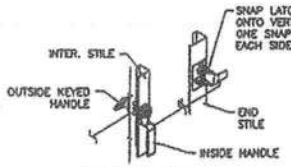

OUTSIDE KEYED LOCK SNAP LATCH LOCK OPTION

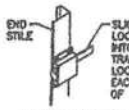

INSIDE SLIDE BOLT LOCK OPTION

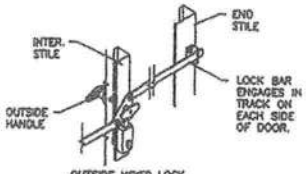

OUTSIDE KEYED LOCK LOCK BAR LOCKING

LISTED
SBCCI PST&ESI®
REPORT#9606C

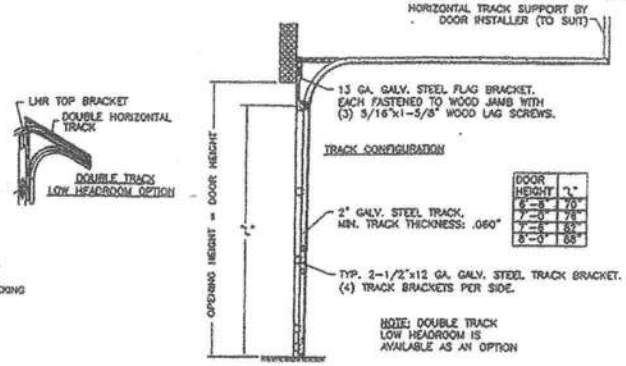

DOOR HEIGHT	"L"
6'-8"	70"
7'-0"	78"
7'-6"	82"
8'-0"	88"

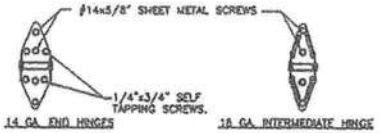

VERTICAL JAMB ATTACHMENT (C-90 BLOCK OR 2,000 PSI MIN. CONCRETE COLUMN):
3/8"x4" SLEEVE ANCHOR BOLTS ON 21" CENTERS (C-90 BLOCK) OR 24" CENTERS (2,000 PSI MIN. CONCRETE) OR 1/4"x4" TAPCON SCREWS ON 17-1/2" CENTERS (2,000 PSI MIN. CONCRETE). WASHERS INCLUDED WITH SLEEVE ANCHORS, 1" O.D. MIN. WASHERS REQUIRED WITH TAPCONS. ANCHORS MAY BE COUNTERSUNK (BUT NOT REQUIRED) TO PROVIDE A FLUSH MOUNTING SURFACE. HORIZONTAL JAMBS DO NOT TRANSFER LOAD.

VERTICAL JAMB ATTACHMENT (WOOD FRAME BUILDINGS):
1/2"x3" LAG SCREWS ON 19" CENTERS. 1" O.D. MIN. WASHER REQUIRED. LAG SCREWS MAY BE COUNTERSUN (BUT NOT REQUIRED) TO PROVIDE A FLUSH MOUNTING SURFACE. HORIZONTAL JAMBS DO NOT TRANSFER LOAD.

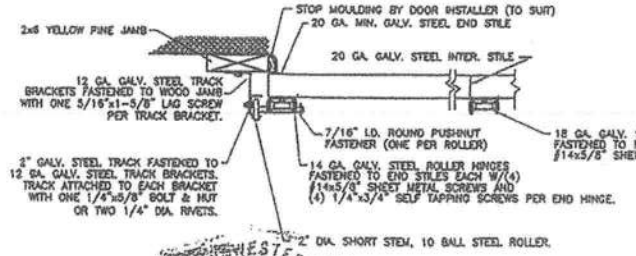

PREPARATION OF JAMBS BY: OTHERS.

JAMB CONFIGURATION
SECTION C-C

DESIGN ENGINEER: MARK WESTERFIELD, F
FLORIDA P.E. #48495
DESIGN LOADS: +24.0 PSF & -24.5 PS
TEST LOADS: +36.0 PSF & -37.0 PSF

Clopay Building Products Company

CLOPAY BUILDING PRODUCTS COMPANY
312 WALNUT STREET
SUITE 1600
CINCINNATI, OH 45202
(513) 381-4800

SCALE:	NOTED
DATE:	1/3/97
DRAWN BY:	JAC
CHECKED BY:	MWW
PLOT:	
MAX. DOOR SIZE:	16'0"W x 8'0"H
DESCRIPTION:	M/N 73/75/84A/94 16'W +24/-24.5 PSF DES.
B	DRAWING NUMBER: 101711
REV	0

TimberSaver PT is a borate based wood preservative applied to lumber and plywood using a pressure-treatment process, to provide permanent protection against wood destroying insects and decay fungi in interior applications. TimberSaver PT borate treated lumber and plywood is not suitable for applications exposed to the weather or in ground contact and must be protected from exposure to liquid water.

The active ingredient in TimberSaver PT, Disodium Octaborate Tetrahydrate or DOT, is the most widely accepted form of borates used for treatment of forest products. DOT is manufactured from naturally occurring boron, which is widely used in a variety of applications in agriculture, cleaning products and detergents, and in wood preservation.

Product Attributes

TimberSaver® PT

- Offers the most effective level of borate protection
- Provides permanent protection for dry interior applications
- Protects against fungal decay
- Protects against Formosan Termites and other wood destroying insects
- Non-corrosive to metal fasteners
- Non-toxic to humans and animals
- Does not adversely affect the strength properties of the treated lumber or plywood
- Is a colorless treatment and is also available with a dye to make job site product identification easier
- Is applied through a pressure-treatment process to optimize penetration of borate preservative
- Penetrates difficult-to-treat refractory species such as Spruce-Pine-Fir and Douglas-Fir*

* Incising is required for Coastal Douglas-Fir and Western Spruce-Pine-Fir as per AWPA Standard C31

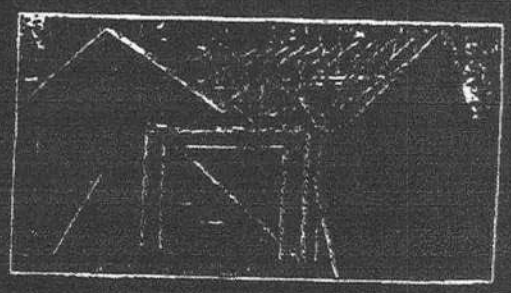

Uses for TimberSaver® PT

Applications for **TimberSaver PT** treated products include:

- Framing Lumber
- Studs
- Sill Plates
- Floor Joists
- Roof Rafters
- Trusses
- Plywood
- Interior Sheathing
- Furring Strips
- Flooring
- Moldings
- Interior Wood Trim

TimberSaver PT Protects Against These Wood Destroying Insects and Decay Causing Fungi.

- Formosan Termites*
- Subterranean Termites *(Coptotermes, Reticulitermes, Heterotermes)*
- Dampwood Termites *(Zootermopsis)*
- Drywood Termites *(Kalotermes, Incisitermes)*
- Carpenter Ants *(Componotus)*
- Powderpost Beetles *(Lyctidae)*
- Furniture Beetles *(Anobiidae)*
- Longhorn Beetles *(Cerambycidae)*
- Brown Rot Fungi
- White Rot Fungi
- Wet Rot Fungi

* Borate preservatives have been and continue to be a key weapon used in controlling Formosan Termites in Hawaii and other high hazard areas throughout the world. TimberSaver PT borate-treated lumber and plywood is protected against this aggressive termite species when the higher 0.42 pcf (DOT) retention is specified.

Handling and Use TimberSaver® PT

TimberSaver PT borate treated wood can be sawn, nailed, drilled, stained and assembled using standard fastener systems typically used in general wood construction practices.

Lumber and plywood treated with **TimberSaver PT** must be protected from exposure to the weather while in transit and while being stored at retail yards and job sites. **TimberSaver PT** products should be stored out of ground contact, either indoors or wrapped in plastic to protect against exposure to liquid water.

With the exception of Southern Pine, all end cut surfaces and field cuts of any type must receive an application of **TimberSaver** solution by brushing, spraying, dipping, or flooding.

Residential System Sizing Calculation

Summary

Spec

Lake City, Fl

Project Title:
911124JohnsonBuildersLot15Russwood

Class 3 Rating
Registration No. 0
Climate: North

12/4/2009

Location for weather data: Gainesville - Defaults: Latitude(29) Altitude(152 ft.) Temp Range(M)
Humidity data: Interior RH (50%) Outdoor wet bulb (77F) Humidity difference(54gr.)

Winter design temperature	33	F	Summer design temperature	92	F
Winter setpoint	70	F	Summer setpoint	75	F
Winter temperature difference	37	F	Summer temperature difference	17	F
Total heating load calculation	**47504**	**Btuh**	**Total cooling load calculation**	**43368**	**Btuh**
Submitted heating capacity	% of calc	Btuh	Submitted cooling capacity	% of calc	Btuh
Total (Electric Heat Pump)	117.9	56000	Sensible (SHR = 0.75)	113.4	42000
Heat Pump + Auxiliary(0.0kW)	117.9	56000	Latent	220.9	14000
			Total (Electric Heat Pump)	129.1	56000

WINTER CALCULATIONS

Winter Heating Load (for 3124 sqft)

Load component			Load	
Window total	375	sqft	12055	Btuh
Wall total	2176	sqft	7144	Btuh
Door total	70	sqft	907	Btuh
Ceiling total	3237	sqft	3814	Btuh
Floor total	288	sqft	12574	Btuh
Infiltration	272	cfm	11009	Btuh
Duct loss			0	Btuh
Subtotal			**47504**	**Btuh**
Ventilation	0	cfm	0	Btuh
TOTAL HEAT LOSS			**47504**	**Btuh**

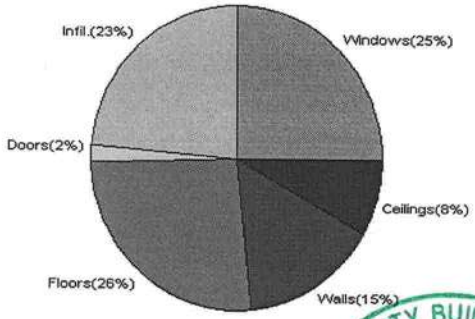

SUMMER CALCULATIONS

Summer Cooling Load (for 3124 sqft)

Load component			Load	
Window total	375	sqft	21825	Btuh
Wall total	2176	sqft	2763	Btuh
Door total	70	sqft	686	Btuh
Ceiling total	3237	sqft	5361	Btuh
Floor total			0	Btuh
Infiltration	141	cfm	2616	Btuh
Internal gain			3780	Btuh
Duct gain			0	Btuh
Sens. Ventilation	0	cfm	0	Btuh
Total sensible gain			**37031**	**Btuh**
Latent gain(ducts)			0	Btuh
Latent gain(infiltration)			5138	Btuh
Latent gain(ventilation)			0	Btuh
Latent gain(internal/occupants/other)			1200	Btuh
Total latent gain			**6338**	**Btuh**
TOTAL HEAT GAIN			**43368**	**Btuh**

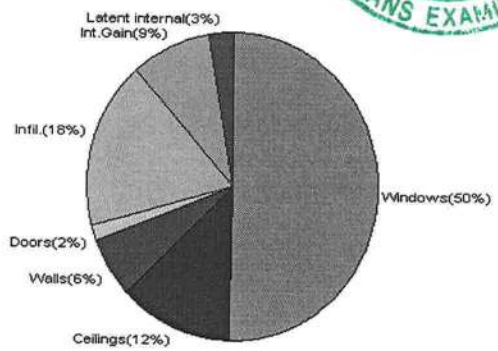

For Florida residences only

EnergyGauge® System Sizing
PREPARED BY:
DATE: 12/4/09 CYAN BENNSLEY

System Sizing Calculations - Winter

Residential Load - Whole House Component Details

Spec | Project Title: 911124JohnsonBuildersLot15Russwood | Class 3 Rating
Registration No. 0
Lake City, Fl | Climate: North

Reference City: Gainesville (Defaults) Winter Temperature Difference: 37.0 F | 12/4/2009

This calculation is for Worst Case. The house has been rotated 315 degrees.

Component Loads for Whole House

Window	Panes/SHGC/Frame/U	Orientation	Area(sqft) X	HTM=	Load
1	2, Clear, Metal, 0.87	NW	15.0	32.2	483 Btuh
2	2, Clear, Metal, 0.87	NW	8.0	32.2	258 Btuh
3	2, Clear, Metal, 0.87	NW	36.0	32.2	1159 Btuh
4	2, Clear, Metal, 0.87	NE	36.0	32.2	1159 Btuh
5	2, Clear, Metal, 0.87	N	20.0	32.2	644 Btuh
6	2, Clear, Metal, 0.87	NW	54.0	32.2	1738 Btuh
7	2, Clear, Metal, 0.87	SW	10.0	32.2	322 Btuh
8	2, Clear, Metal, 0.87	NW	36.0	32.2	1159 Btuh
9	2, Clear, Metal, 0.87	NE	8.0	32.2	258 Btuh
10	2, Clear, Metal, 0.87	NE	16.0	32.2	515 Btuh
11	2, Clear, Metal, 0.87	SE	72.0	32.2	2318 Btuh
12	2, Clear, Metal, 0.87	SE	13.5	32.2	435 Btuh
13	2, Clear, Metal, 0.87	SW	20.0	32.2	644 Btuh
14	2, Clear, Metal, 0.87	SW	30.0	32.2	966 Btuh
	Window Total		375(sqft)		12055 Btuh
Walls	Type	R-Value	Area X	HTM=	Load
1	Face Brick - Wood - Ext(0.09)	13.0	1953	3.3	6412 Btuh
2	Frame - Wood - Adj(0.09)	13.0	223	3.3	732 Btuh
	Wall Total		2176		7144 Btuh
Doors	Type		Area X	HTM=	Load
1	Insulated - Adjacent		20	12.9	259 Btuh
2	Insulated - Exterior		20	12.9	259 Btuh
3	Insulated - Exterior		10	12.9	130 Btuh
4	Insulated - Exterior		20	12.9	259 Btuh
	Door Total		70		907Btuh
Ceilings	Type/Color/Surface	R-Value	Area X	HTM=	Load
1	Vented Attic/D/Shin)	30.0	113	1.2	133 Btuh
2	Vented Attic/D/Shin)	30.0	3124	1.2	3681 Btuh
	Ceiling Total		3237		3814Btuh
Floors	Type	R-Value	Size X	HTM=	Load
1	Slab On Grade	0	288.0 ft(p)	43.7	12574 Btuh
	Floor Total		288		12574 Btuh
			Zone Envelope Subtotal:		36494 Btuh
Infiltration	Type	ACH X	Zone Volume	CFM=	
	Natural	0.58	28116	271.8	11009 Btuh
Ductload	Partially sealed, R6.0, Supply(Attic), Return(Attic)			(DLM of 0.00)	0 Btuh
Zone #1			**Sensible Zone Subtotal**		**47504 Btuh**

Manual J Winter Calculations

Residential Load - Component Details (continued)

Spec

Lake City, Fl

Project Title:
911124JohnsonBuildersLot15Russwood

Class 3 Rating
Registration No. 0
Climate: North

12/4/2009

WHOLE HOUSE TOTALS

	Subtotal Sensible	47504 Btuh
	Ventilation Sensible	0 Btuh
	Total Btuh Loss	47504 Btuh

Key: Window types (SHGC - Shading coefficient of glass as SHGC numerical value or as clear or tint)
(Frame types - metal, wood or insulated metal)
(U - Window U-Factor or 'DEF' for default)
(HTM - ManualJ Heat Transfer Multiplier)
Key: Floor size (perimeter(p) for slab-on-grade or area for all other floor types)

For Florida residences only

System Sizing Calculations - Winter

Residential Load - Room by Room Component Details

Spec | Project Title: 911124JohnsonBuildersLot15Russwood | Class 3 Rating
Registration No. 0
Lake City, Fl | Climate: North

Reference City: Gainesville (Defaults) Winter Temperature Difference: 37.0 F | 12/4/2009

This calculation is for Worst Case. The house has been rotated 315 degrees.

Component Loads for Zone #1: Main

Window	Panes/SHGC/Frame/U	Orientation	Area(sqft) X	HTM=	Load
1	2, Clear, Metal, 0.87	NW	15.0	32.2	483 Btuh
2	2, Clear, Metal, 0.87	NW	8.0	32.2	258 Btuh
3	2, Clear, Metal, 0.87	NW	36.0	32.2	1159 Btuh
4	2, Clear, Metal, 0.87	NE	36.0	32.2	1159 Btuh
5	2, Clear, Metal, 0.87	N	20.0	32.2	644 Btuh
6	2, Clear, Metal, 0.87	NW	54.0	32.2	1738 Btuh
7	2, Clear, Metal, 0.87	SW	10.0	32.2	322 Btuh
8	2, Clear, Metal, 0.87	NW	36.0	32.2	1159 Btuh
9	2, Clear, Metal, 0.87	NE	8.0	32.2	258 Btuh
10	2, Clear, Metal, 0.87	NE	16.0	32.2	515 Btuh
11	2, Clear, Metal, 0.87	SE	72.0	32.2	2318 Btuh
12	2, Clear, Metal, 0.87	SE	13.5	32.2	435 Btuh
13	2, Clear, Metal, 0.87	SW	20.0	32.2	644 Btuh
14	2, Clear, Metal, 0.87	SW	30.0	32.2	966 Btuh
	Window Total		375(sqft)		12055 Btuh
Walls	Type	R-Value	Area X	HTM=	Load
1	Face Brick - Wood - Ext(0.09)	13.0	1953	3.3	6412 Btuh
2	Frame - Wood - Adj(0.09)	13.0	223	3.3	732 Btuh
	Wall Total		2176		7144 Btuh
Doors	Type		Area X	HTM=	Load
1	Insulated - Adjacent		20	12.9	259 Btuh
2	Insulated - Exterior		20	12.9	259 Btuh
3	Insulated - Exterior		10	12.9	130 Btuh
4	Insulated - Exterior		20	12.9	259 Btuh
	Door Total		70		907Btuh
Ceilings	Type/Color/Surface	R-Value	Area X	HTM=	Load
1	Vented Attic/D/Shin)	30.0	113	1.2	133 Btuh
2	Vented Attic/D/Shin)	30.0	3124	1.2	3681 Btuh
	Ceiling Total		3237		3814Btuh
Floors	Type	R-Value	Size X	HTM=	Load
1	Slab On Grade	0	288.0 ft(p)	43.7	12574 Btuh
	Floor Total		288		12574 Btuh
			Zone Envelope Subtotal:		36494 Btuh
Infiltration	Type	ACH X	Zone Volume	CFM=	
	Natural	0.58	28116	271.8	11009 Btuh
Ductload	Partially sealed, R6.0, Supply(Attic), Return(Attic)			(DLM of 0.00)	0 Btuh
Zone #1			**Sensible Zone Subtotal**		**47504 Btuh**

Manual J Winter Calculations

Residential Load - Component Details (continued)

Spec

Lake City, Fl

Project Title:
911124JohnsonBuildersLot15Russwood

Class 3 Rating
Registration No. 0
Climate: North

12/4/2009

WHOLE HOUSE TOTALS

	Subtotal Sensible	47504 Btuh
	Ventilation Sensible	0 Btuh
	Total Btuh Loss	47504 Btuh

Key: Window types (SHGC - Shading coefficient of glass as SHGC numerical value or as clear or tint)
(Frame types - metal, wood or insulated metal)
(U - Window U-Factor or 'DEF' for default)
(HTM - ManualJ Heat Transfer Multiplier)
Key: Floor size (perimeter(p) for slab-on-grade or area for all other floor types)

For Florida residences only

System Sizing Calculations - Summer

Residential Load - Whole House Component Details

Spec

Project Title:
911124JohnsonBuildersLot15Russwood

Class 3 Rating
Registration No. 0
Climate: North

Lake City, Fl

Reference City: Gainesville (Defaults) Summer Temperature Difference: 17.0 F 12/4/2009

This calculation is for Worst Case. The house has been rotated 315 degrees.

Component Loads for Whole House

Window	Type* Pn/SHGC/U/InSh/ExSh/IS	Ornt	Overhang Len	Overhang Hgt	Window Area(sqft) Gross	Shaded	Unshaded	HTM Shaded	HTM Unshaded	Load
1	2, Clear, 0.87, None,N,N	NW	1.5ft	7ft.	15.0	0.0	15.0	29	60	901 Btuh
2	2, Clear, 0.87, None,N,N	NW	1.5ft	6ft.	8.0	0.0	8.0	29	60	480 Btuh
3	2, Clear, 0.87, None,N,N	NW	1.5ft	8ft.	36.0	0.0	36.0	29	60	2161 Btuh
4	2, Clear, 0.87, None,N,N	NE	1.5ft	8ft.	36.0	0.0	36.0	29	60	2161 Btuh
5	2, Clear, 0.87, None,N,N	N	16ft.	8ft.	20.0	0.0	20.0	29	29	579 Btuh
6	2, Clear, 0.87, None,N,N	NW	13ft.	8ft.	54.0	0.0	54.0	29	60	3242 Btuh
7	2, Clear, 0.87, None,N,N	SW	99ft.	8ft.	10.0	10.0	0.0	29	63	290 Btuh
8	2, Clear, 0.87, None,N,N	NW	1.5ft	8ft.	36.0	0.0	36.0	29	60	2161 Btuh
9	2, Clear, 0.87, None,N,N	NE	1.5ft	6ft.	8.0	0.0	8.0	29	60	480 Btuh
10	2, Clear, 0.87, None,N,N	NE	1.5ft	6ft.	16.0	0.0	16.0	29	60	961 Btuh
11	2, Clear, 0.87, None,N,N	SE	10.5f	8ft.	72.0	72.0	0.0	29	63	2085 Btuh
12	2, Clear, 0.87, None,N,N	SE	14ft.	9ft.	13.5	13.5	0.0	29	63	391 Btuh
13	2, Clear, 0.87, None,N,N	SW	1.5ft	7ft.	20.0	2.1	17.9	29	63	1180 Btuh
14	2, Clear, 0.87, None,N,N	SW	1.5ft	7ft.	30.0	3.1	26.9	29	63	1771 Btuh
	Excursion									2981 Btuh
	Window Total				375 (sqft)					21825 Btuh

Walls	Type	R-Value/U-Value	Area(sqft)	HTM	Load
1	Face Brick - Wood - Ext	13.0/0.09	1952.5	1.2	2426 Btuh
2	Frame - Wood - Adj	13.0/0.09	223.0	1.5	336 Btuh
	Wall Total		2176 (sqft)		2763 Btuh

Doors	Type	Area (sqft)	HTM	Load
1	Insulated - Adjacent	20.0	9.8	196 Btuh
2	Insulated - Exterior	20.0	9.8	196 Btuh
3	Insulated - Exterior	10.0	9.8	98 Btuh
4	Insulated - Exterior	20.0	9.8	196 Btuh
	Door Total	70 (sqft)		686 Btuh

Ceilings	Type/Color/Surface	R-Value	Area(sqft)	HTM	Load
1	Vented Attic/DarkShingle	30.0	113.0	1.7	187 Btuh
2	Vented Attic/DarkShingle	30.0	3124.0	1.7	5174 Btuh
	Ceiling Total		3237 (sqft)		5361 Btuh

Floors	Type	R-Value	Size	HTM	Load
1	Slab On Grade	0.0	288 (ft(p))	0.0	0 Btuh
	Floor Total		288.0 (sqft)		0 Btuh

	Zone Envelope Subtotal:	30635 Btuh

Infiltration	Type	ACH	Volume(cuft)	CFM=	Load
	SensibleNatural	0.30	28116	140.6	2616 Btuh

Internal gain	Occupants	Btuh/occupant	Appliance	Load
	6	X 230 +	2400	3780 Btuh

Duct load	Partially sealed, R6.0, Supply(Attic), Return(Attic) DGM = 0.00	0.0 Btuh
	Sensible Zone Load	**37031 Btuh**

Manual J Summer Calculations

Residential Load - Component Details (continued)

Spec

Lake City, Fl

Project Title:
911124JohnsonBuildersLot15Russwood

Class 3 Rating
Registration No. 0
Climate: North

12/4/2009

WHOLE HOUSE TOTALS

	Sensible Envelope Load All Zones	**37031**	**Btuh**
	Sensible Duct Load	0	Btuh
	Total Sensible Zone Loads	**37031**	**Btuh**
	Sensible ventilation	0	Btuh
	Blower	0	Btuh
Whole House	**Total sensible gain**	**37031**	**Btuh**
Totals for Cooling	Latent infiltration gain (for 54 gr. humidity difference)	5138	Btuh
	Latent ventilation gain	0	Btuh
	Latent duct gain	0	Btuh
	Latent occupant gain (6 people @ 200 Btuh per person)	1200	Btuh
	Latent other gain	0	Btuh
	Latent total gain	**6338**	**Btuh**
	TOTAL GAIN	**43368**	**Btuh**

*Key: Window types (Pn - Number of panes of glass)
(SHGC - Shading coefficient of glass as SHGC numerical value or as clear or tint)
(U - Window U-Factor or 'DEF' for default)
(InSh - Interior shading device: none(N), Blinds(B), Draperies(D) or Roller Shades(R))
(ExSh - Exterior shading device: none(N) or numerical value)
(BS - Insect screen: none(N), Full(F) or Half(H))
(Ornt - compass orientation)

For Florida residences only

System Sizing Calculations - Summer

Residential Load - Room by Room Component Details

Spec

Lake City, Fl

Project Title:
911124JohnsonBuildersLot15Russwood

Class 3 Rating
Registration No. 0
Climate: North

Reference City: Gainesville (Defaults) Summer Temperature Difference: 17.0 F

12/4/2009

This calculation is for Worst Case. The house has been rotated 315 degrees.

Component Loads for Zone #1: Main

Window	Type* Pn/SHGC/U/InSh/ExSh/IS	Ornt	Overhang Len	Overhang Hgt	Window Area(sqft) Gross	Shaded	Unshaded	HTM Shaded	HTM Unshaded	Load
1	2, Clear, 0.87, None,N,N	NW	1.5ft	7ft.	15.0	0.0	15.0	29	60	901 Btuh
2	2, Clear, 0.87, None,N,N	NW	1.5ft	6ft.	8.0	0.0	8.0	29	60	480 Btuh
3	2, Clear, 0.87, None,N,N	NW	1.5ft	8ft.	36.0	0.0	36.0	29	60	2161 Btuh
4	2, Clear, 0.87, None,N,N	NE	1.5ft	8ft.	36.0	0.0	36.0	29	60	2161 Btuh
5	2, Clear, 0.87, None,N,N	N	16ft.	8ft.	20.0	0.0	20.0	29	29	579 Btuh
6	2, Clear, 0.87, None,N,N	NW	13ft.	8ft.	54.0	0.0	54.0	29	60	3242 Btuh
7	2, Clear, 0.87, None,N,N	SW	99ft.	8ft.	10.0	10.0	0.0	29	63	290 Btuh
8	2, Clear, 0.87, None,N,N	NW	1.5ft	8ft.	36.0	0.0	36.0	29	60	2161 Btuh
9	2, Clear, 0.87, None,N,N	NE	1.5ft	6ft.	8.0	0.0	8.0	29	60	480 Btuh
10	2, Clear, 0.87, None,N,N	NE	1.5ft	6ft.	16.0	0.0	16.0	29	60	961 Btuh
11	2, Clear, 0.87, None,N,N	SE	10.5f	8ft.	72.0	72.0	0.0	29	63	2085 Btuh
12	2, Clear, 0.87, None,N,N	SE	14ft.	9ft.	13.5	13.5	0.0	29	63	391 Btuh
13	2, Clear, 0.87, None,N,N	SW	1.5ft	7ft.	20.0	2.1	17.9	29	63	1180 Btuh
14	2, Clear, 0.87, None,N,N	SW	1.5ft	7ft.	30.0	3.1	26.9	29	63	1771 Btuh
	Excursion									2981 Btuh
	Window Total				375 (sqft)					21825 Btuh

Walls	Type	R-Value/U-Value	Area(sqft)	HTM	Load
1	Face Brick - Wood - Ext	13.0/0.09	1952.5	1.2	2426 Btuh
2	Frame - Wood - Adj	13.0/0.09	223.0	1.5	336 Btuh
	Wall Total		2176 (sqft)		2763 Btuh

Doors	Type	Area (sqft)	HTM	Load
1	Insulated - Adjacent	20.0	9.8	196 Btuh
2	Insulated - Exterior	20.0	9.8	196 Btuh
3	Insulated - Exterior	10.0	9.8	98 Btuh
4	Insulated - Exterior	20.0	9.8	196 Btuh
	Door Total	70 (sqft)		686 Btuh

Ceilings	Type/Color/Surface	R-Value	Area(sqft)	HTM	Load
1	Vented Attic/DarkShingle	30.0	113.0	1.7	187 Btuh
2	Vented Attic/DarkShingle	30.0	3124.0	1.7	5174 Btuh
	Ceiling Total		3237 (sqft)		5361 Btuh

Floors	Type	R-Value	Size	HTM	Load
1	Slab On Grade	0.0	288 (ft(p))	0.0	0 Btuh
	Floor Total		288.0 (sqft)		0 Btuh

				Zone Envelope Subtotal:	30635 Btuh
Infiltration	Type	ACH	Volume(cuft)	CFM=	Load
	SensibleNatural	0.30	28116	140.6	2616 Btuh
Internal gain		Occupants	Btuh/occupant	Appliance	Load
		6	X 230 +	2400	3780 Btuh
Duct load	Partially sealed, R6.0, Supply(Attic), Return(Attic)			DGM = 0.00	0.0 Btuh
				Sensible Zone Load	**37031 Btuh**

Manual J Summer Calculations

Residential Load - Component Details (continued)

Spec

Lake City, Fl

Project Title:
911124JohnsonBuildersLot15Russwood

Class 3 Rating
Registration No. 0
Climate: North

12/4/2009

WHOLE HOUSE TOTALS

	Sensible Envelope Load All Zones	**37031**	**Btuh**
	Sensible Duct Load	0	Btuh
	Total Sensible Zone Loads	**37031**	**Btuh**
	Sensible ventilation	0	Btuh
	Blower	0	Btuh
Whole House	**Total sensible gain**	**37031**	**Btuh**
Totals for Cooling	Latent infiltration gain (for 54 gr. humidity difference)	5138	Btuh
	Latent ventilation gain	0	Btuh
	Latent duct gain	0	Btuh
	Latent occupant gain (6 people @ 200 Btuh per person)	1200	Btuh
	Latent other gain	0	Btuh
	Latent total gain	**6338**	**Btuh**
	TOTAL GAIN	**43368**	**Btuh**

*Key: Window types (Pn - Number of panes of glass)
(SHGC - Shading coefficient of glass as SHGC numerical value or as clear or tint)
(U - Window U-Factor or 'DEF' for default)
(InSh - Interior shading device: none(N), Blinds(B), Draperies(D) or Roller Shades(R))
(ExSh - Exterior shading device: none(N) or numerical value)
(BS - Insect screen: none(N), Full(F) or Half(H))
(Ornt - compass orientation)

For Florida residences only

Residential Window Diversity

MidSummer

Spec

Lake City, Fl

Project Title:
911124JohnsonBuildersLot15Russwood

Class 3 Rating
Registration No. 0
Climate: North

12/4/2009

Weather data for: Gainesville - Defaults

Summer design temperature	92 F	Average window load for July	15718 Btu
Summer setpoint	75 F	Peak window load for July	23414 Btu
Summer temperature difference	17 F	Excusion limit(130% of Ave.)	20433 Btu
Latitude	29 North	Window excursion (July)	2981 Btuh

WINDOW Average and Peak Loads

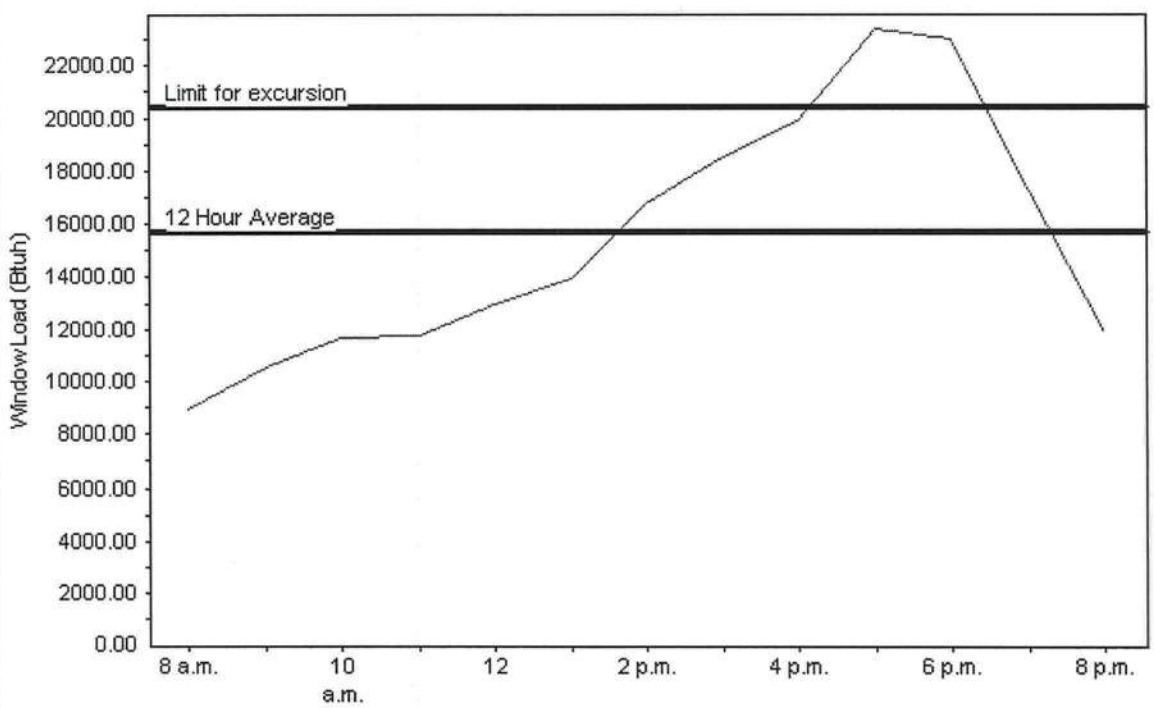

Total July Window Load(Radiation and conduction)

Warning: This application has glass areas that produce relatively large heat gains for part of the day. Variable air volume devices may be required to overcome spikes in solar gain for one or more rooms. A zoned system may be required or some rooms may require zone control.

EnergyGauge® System Sizing for Florida residences only
PREPARED BY: _____
DATE: 12/4/09

EnergyGauge® FLR2PB v4.1

Columbia County Building Department
Culvert Waiver

Culvert Waiver No.
000001776

DATE: 12/16/2009 BUILDING PERMIT NO. 28279

APPLICANT PATRICIA JOHNSON PHONE 755-4038

ADDRESS 204 SW DUSTY GLEN LAKE CITY FL 32024

OWNER PATRICIA JOHNSON PHONE 755-4038

ADDRESS 234 SW SCOTT PLACE LAKE CITY FL 32024

CONTRACTOR PATRICIA JOHNSON PHONE 755-4038

LOCATION OF PROPERTY 90W, TL ON 247S, TR ON TROY ROAD, TR RUSSWOOD TERR., TL BETHANY PL, TR DOROTHY, TR SCOTT PLACE, TO THE END ON RIGHT

SUBDIVISION/LOT/BLOCK/PHASE/UNIT RUSSWOOD ESTATES 15

PARCEL ID # 10-4S-16-02853-415

I HEREBY CERTIFY THAT I UNDERSTAND AND WILL FULLY COMPLY WITH THE DECISION OF THE COLUMBIA COUNTY PUBLIC WORKS DEPARTMENT IN CONNECTION WITH THE HEREIN PROPOSED APPLICATION.

SIGNATURE: X Pat Johnson

A SEPARATE CHECK IS REQUIRED
MAKE CHECKS PAYABLE TO BCC

Amount Paid 50.00

PUBLIC WORKS DEPARTMENT USE ONLY

I HEREBY CERTIFY THAT I HAVE EXAMINED THIS APPLICATION AND DETERMINED THAT THE CULVERT WAIVER IS:

APPROVED

NOT APPROVED - NEEDS A CULVERT PERMIT

COMMENTS:

SIGNED: James Thomas DATE: 12-29-09

ANY QUESTIONS PLEASE CONTACT THE PUBLIC WORKS DEPARTMENT AT 386-752-5955.

135 NE Hernando Ave., Suite B-21
Lake City, FL 32055
Phone: 386-758-1008 Fax: 386-758-2160

RECEIVED
DEC 22 2009
By

COLUMBIA COUNTY GATEWAY TO FLORIDA

FORM 1100A-08

FLORIDA ENERGY EFFICIENCY CODE FOR BUILDING CONSTRUCTION

Florida Department of Community Affairs Residential Performance Method A

Project Name:	911124JohnsonBuildersLot15Russwood	Builder Name:	John Johnson
Street:		Permit Office:	Columbia
City, State, Zip:	Lake City , Fl ,	Permit Number:	28279
Owner:	Spec	Jurisdiction:	221000
Design Location:	FL, Gainesville		

1. New construction or existing	New (From Plans)
2. Single family or multiple family	Single-family
3. Number of units, if multiple family	1
4. Number of Bedrooms	4
5. Is this a worst case?	Yes
6. Conditioned floor area (ft²)	3124

7. Windows	Description	Area
a. U-Factor:	Dbl, default	374.50 ft²
SHGC:	Clear, default	
b. U-Factor:	N/A	ft²
SHGC:		
c. U-Factor:	N/A	ft²
SHGC:		
d. U-Factor:	N/A	ft²
SHGC:		
e. U-Factor:	N/A	ft²
SHGC:		

8. Floor Types	Insulation	Area
a. Slab-On-Grade Edge Insulation	R=0.0	3124.00 ft²
b. N/A	R=	ft²
c. N/A	R=	ft²

9. Wall Types	Insulation	Area
a. Face Brick - Wood, Exterior	R=13.0	2397.00 ft²
b. Frame - Wood, Adjacent	R=13.0	243.00 ft²
c. N/A	R=	ft²
d. N/A	R=	ft²

10. Ceiling Types	Insulation	Area
a. Under Attic (Vented)	R=30.0	3124.00 ft²
b. Knee Wall (Vented)	R=30.0	113.00 ft²
c. N/A	R=	ft²

11. Ducts
a. Sup: Attic Ret: Attic AH: Garage Sup. R= 6, 380 ft²

12. Cooling systems
a. Central Unit — Cap: 56.0 kBtu/hr, SEER: 13

13. Heating systems
a. Electric Heat Pump — Cap: 56.0 kBtu/hr, HSPF: 7.7

14. Hot water systems
a. Electric — Cap: 50 gallons, EF: 0.93

b. Conservation features
None

15. Credits — None

Glass/Floor Area: 0.120

Total As-Built Modified Loads: 49.08
Total Baseline Loads: 58.73

PASS

I hereby certify that the plans and specifications covered by this calculation are in compliance with the Florida Energy Code.

PREPARED BY:
DATE: 12/4/09 EVAN BARNSLOY

I hereby certify that this building, as designed, is in compliance with the Florida Energy Code.

OWNER/AGENT:
DATE:

Review of the plans and specifications covered by this calculation indicates compliance with the Florida Energy Code. Before construction is completed this building will be inspected for compliance with Section 553.908 Florida Statutes.

GREAT SEAL OF THE STATE OF FLORIDA — IN GOD WE TRUST

BUILDING OFFICIAL:
DATE:

COLUMBIA COUNTY BUILDING DEPARTMENT — Received for FILE COPY — Code Compliance — PLANS EXAMINER

PROJECT

Title:	911124JohnsonBuildersLot15	Bedrooms:	4	Adress Type:	Lot Information
Building Type:	FLAsBuilt	Bathrooms:	0	Lot #	15
Owner:	Spec	Conditioned Area:	3124	SubDivision:	russwood
# of Units:	1	Total Stories:	1	PlatBook:	
Builder Name:	John Johnson	Worst Case:	Yes	Street:	
Permit Office:		Rotate Angle:	315	County:	Columbia
Jurisdiction:		Cross Ventilation:	No	City, State, Zip:	Lake City ,
Family Type:	Single-family	Whole House Fan:	No		Fl ,
New/Existing:	New (From Plans)				
Comment:					

CLIMATE

√	Design Location	TMY Site	IECC Zone	Design Temp 97.5 %	Design Temp 2.5 %	Int Design Temp Winter	Int Design Temp Summer	Heating Degree Days	Design Moisture	Daily Temp Range
_____	FL, Gainesville	FL_GAINESVILLE_REGI	2	32	92	75	70	1305.5	51	Medium

FLOORS

√	#	Floor Type	Perimeter	R-Value	Area	Tile	Wood	Carpet
_____	1	Slab-On-Grade Edge Insulatio	288 ft	0	3124 ft²	0.3	0.3	0.4

ROOF

√	#	Type	Materials	Roof Area	Gable Area	Roof Color	Solar Absor.	Tested	Deck Insul.	Pitch
_____	1	Hip	Composition shingles	3618 ft²	0 ft²	Dark	0.96	No	0	30.3 deg

ATTIC

√	#	Type	Ventilation	Vent Ratio (1 in)	Area	RBS	IRCC
_____	1	Full attic	Vented	303	3124 ft²	N	N

CEILING

√	#	Ceiling Type	R-Value	Area	Framing Frac	Truss Type
_____	1	Under Attic (Vented)	30	3124 ft²	0.11	Wood
_____	2	Knee Wall (Vented)	30	113 ft²	0.11	Wood

WALLS

√	#	Ornt	Adjacent To	Wall Type	Cavity R-Value	Area	Sheathing R-Value	Framing Fraction	Solar Absor.
_____	1	N	Exterior	Face Brick - Wood	13	688.5 ft²	0	0.23	0.75
_____	2	S	Exterior	Face Brick - Wood	13	472.5 ft²	0	0.23	0.75
_____	3	E	Exterior	Face Brick - Wood	13	538.5 ft²	0	0.23	0.75
_____	4	W	Exterior	Face Brick - Wood	13	595.5 ft²	0	0.23	0.75
_____	5	NE	Exterior	Face Brick - Wood	13	102 ft²	0	0.23	0.75
_____	6	??	Garage	Frame - Wood	13	243 ft²		0.23	0.01

DOORS

√	#	Ornt	Door Type	Storms	U-Value	Area
____	1	NE	Insulated	None	0.4	10 ft²
____	2	W	Insulated	None	0.4	10 ft²
____	3	S	Insulated	None	0.4	20 ft²
____	4	??	Insulated	None	0.4	20 ft²
____	5	NE	Insulated	None	0.4	10 ft²

WINDOWS

Window orientation below is as entered. Actual orientation is modified by rotate angle shown in "Project" section above.

√	#	Ornt	Frame	Panes	NFRC	U-Factor	SHGC	Storms	Area	Overhang Depth	Overhang Separation	Int Shade	Screening
____	1	N	Metal	Double (Clear)	No	0.87	0.66	N	15 ft²	0 ft 18 in	0 ft 30 in	HERS 2006	None
____	2	N	Metal	Double (Clear)	No	0.87	0.66	N	8 ft²	0 ft 18 in	0 ft 30 in	HERS 2006	None
____	3	N	Metal	Double (Clear)	No	0.87	0.66	N	36 ft²	0 ft 18 in	0 ft 30 in	HERS 2006	None
____	4	E	Metal	Double (Clear)	No	0.87	0.66	N	36 ft²	0 ft 18 in	0 ft 30 in	HERS 2006	None
____	5	NE	Metal	Double (Clear)	No	0.87	0.66	N	20 ft²	0 ft 192 in	0 ft 42 in	HERS 2006	None
____	6	N	Metal	Double (Clear)	No	0.87	0.66	N	54 ft²	0 ft 156 in	0 ft 30 in	HERS 2006	None
____	7	W	Metal	Double (Clear)	No	0.87	0.66	N	10 ft²	0 ft 1188 i	0 ft 42 in	HERS 2006	None
____	8	N	Metal	Double (Clear)	No	0.87	0.66	N	36 ft²	0 ft 18 in	0 ft 30 in	HERS 2006	None
____	9	E	Metal	Double (Clear)	No	0.87	0.66	N	8 ft²	0 ft 18 in	0 ft 30 in	HERS 2006	None
____	10	E	Metal	Double (Clear)	No	0.87	0.66	N	16 ft²	0 ft 18 in	0 ft 30 in	HERS 2006	None
____	11	S	Metal	Double (Clear)	No	0.87	0.66	N	72 ft²	0 ft 126 in	0 ft 30 in	HERS 2006	None
____	12	S	Metal	Double (Clear)	No	0.87	0.66	N	13.5 ft²	0 ft 168 in	0 ft 33 in	HERS 2006	None
____	13	W	Metal	Double (Clear)	No	0.87	0.66	N	20 ft²	0 ft 18 in	0 ft 30 in	HERS 2006	None
____	14	W	Metal	Double (Clear)	No	0.87	0.66	N	30 ft²	0 ft 18 in	0 ft 30 in	HERS 2006	None

INFILTRATION & VENTING

√	Method	SLA	CFM 50	ACH 50	ELA	EqLA	---- Forced Ventilation ---- Supply CFM	Exhaust CFM	Run Time Fraction	Fan Watts
____	Default	0.00036	2950	6.30	161.9	304.6	0 cfm	0 cfm	0	0

GARAGE

√	#	Floor Area	Ceiling Area	Exposed Wall Perimeter	Avg. Wall Height	Exposed Wall Insulation
____	1	925.2 ft²	925.2 ft²	96 ft	9 ft	(invalid)

COOLING SYSTEM

√	#	System Type	Subtype	Efficiency	Capacity	Air Flow	SHR	Ductless
____	1	Central Unit	None	SEER: 13	56 kBtu/hr	1680 cfm	0.75	

HEATING SYSTEM

√	#	System Type	Subtype	Efficiency	Capacity	Ductless
____	1	Electric Heat Pump	None	HSPF: 7.7	56 kBtu/hr	

HOT WATER SYSTEM

√	#	System Type	EF	Cap	Use	SetPnt	Conservation
____	1	Electric	0.93	50 gal	70 gal	120 deg	None

SOLAR HOT WATER SYSTEM

√	FSEC Cert #	Company Name	System Model #	Collector Model #	Collector Area	Storage Volume	FEF
____	None	None			ft²		

DUCTS

√	#	---- Supply ---- Location	R-Value	Area	---- Return ---- Location	Area	Leakage Type	Air Handler	CFM 25	Percent Leakage	QN	RLF
____	1	Attic	6	380 ft²	Attic	60 ft²	Default Leakage	Garage				

TEMPERATURES

Programable Thermostat: N

Ceiling Fans:

Cooling	[X] Jan	[X] Feb	[X] Mar	[X] Apr	[X] May	[X] Jun	[X] Jul	[X] Aug	[X] Sep	[X] Oct	[X] Nov	[X] Dec
Heating	[X] Jan	[X] Feb	[X] Mar	[X] Apr	[X] May	[X] Jun	[X] Jul	[X] Aug	[X] Sep	[X] Oct	[X] Nov	[X] Dec
Venting	[X] Jan	[X] Feb	[X] Mar	[X] Apr	[X] May	[X] Jun	[X] Jul	[X] Aug	[X] Sep	[X] Oct	[X] Nov	[X] Dec

Thermostat Schedule: HERS 2006 Reference

Schedule Type		Hours 1	2	3	4	5	6	7	8	9	10	11	12
Cooling (WD)	AM	78	78	78	78	78	78	78	78	78	78	78	78
	PM	78	78	78	78	78	78	78	78	78	78	78	78
Cooling (WEH)	AM	78	78	78	78	78	78	78	78	78	78	78	78
	PM	78	78	78	78	78	78	78	78	78	78	78	78
Heating (WD)	AM	68	68	68	68	68	68	68	68	68	68	68	68
	PM	68	68	68	68	68	68	68	68	68	68	68	68
Heating (WEH)	AM	68	68	68	68	68	68	68	68	68	68	68	68
	PM	68	68	68	68	68	68	68	68	68	68	68	68

Code Compliance Cheklist

Residential Whole Building Performance Method A - Details

ADDRESS:	PERMIT #:
Lake City, Fl,	

INFILTRATION REDUCTION COMPLIANCE CHECKLIST

COMPONENTS	SECTION	REQUIREMENTS FOR EACH PRACTICE	CHECK
Exterior Windows & Doors	N1106.AB.1.1	Maximum: .3 cfm/sq.ft. window area; .5 cfm/sq.ft. door area.	
Exterior & Adjacent Walls	N1106.AB.1.2.1	Caulk, gasket, weatherstrip or seal between: windows/doors & frames, surrounding wall; foundation & wall sole or sill plate; joints between exterior wall panels at corners; utility penetrations; between wall panels & top/bottom plates; between walls and floor. EXCEPTION: Frame walls where a continuous infiltration barrier is installed that extends from, and is sealed to, the foundation to the top plate.	
Floors	N1106.AB.1.2.2	Penetrations/openings > 1/8" sealed unless backed by truss or joint members. EXCEPTION: Frame floors where a continuous infiltration barrier is installed that is sealed to the perimeter, penetrations and seams.	
Ceilings	N1106.AB.1.2.3	Between walls & ceilings; penetrations of ceiling plane to top floor; around shafts, chases, soffits, chimneys, cabinets sealed to continuous air barrier; gaps in gyp board & top plate; attic access. EXCEPTION: Frame ceilings where a continuous infiltration barrier is installed that is sealed at the perimeter, at penetrations and seams.	
Recessed Lighting Fixtures	N1106.AB.1.2.4	Type IC rated with no penetrations, sealed; or Type IC or non-IC rated, installed inside a sealed box with 1/2" clearance & 3" from insulation; or Type IC with < 2.0 cfm from conditioned space, tested.	
Multi-story Houses	N1106.AB.1.2.5	Air barrier on perimeter of floor cavity between floors.	
Additional Infiltration reqts	N1106.AB.1.3	Exhaust fans vented to outdoors, dampers; combustion space heaters comply with NFPA, have combustion air.	

OTHER PRESCRIPTIVE MEASURES (must be met or exceeded by all residences.)

COMPONENTS	SECTION	REQUIREMENTS	CHECK
Water Heaters	N1112.AB.3	Comply with efficiency requirements in Table N112.ABC.3. Switch or clearly marked circuit breaker (electric) or cutoff (gas) must be provided. External or built-in heat trap required.	
Swimming Pools & Spas	N1112.AB.2.3	Spas & heated pools must have covers (except solar heated). Non-commercial pools must have a pump timer. Gas spa & pool heaters must have a minimum thermal efficiency of 78%. Heat pump pool heaters shall have a minimum COP of 4.0.	
Shower heads	N1112.AB.2.4	Water flow must be restricted to no more than 2.5 gallons per minute at 80 PSIG.	
Air Distribution Systems	N1110.AB	All ducts, fittings, mechanical equipment and plenum chambers shall be mechanically attached, sealed, insulated and installed in accordance with the criteria of Section N1110.AB. Ducts in unconditioned attics: R-6 min. insulation.	
HVAC Controls	N1107.AB.2	Separate readily accessible manual or automatic thermostat for each system.	
Insulation	N1104.AB.1 N1102.B.1.1	Ceilings-Min. R-19. Common walls-frame R-11 or CBS R-3 both sides. Common ceiling & floors R-11.	

ENERGY PERFORMANCE LEVEL (EPL) DISPLAY CARD

ESTIMATED ENERGY PERFORMANCE INDEX* = 84

The lower the EnergyPerformance Index, the more efficient the home.

, Lake City, Fl,

1. New construction or existing	New (From Plans)
2. Single family or multiple family	Single-family
3. Number of units, if multiple family	1
4. Number of Bedrooms	4
5. Is this a worst case?	Yes
6. Conditioned floor area (ft²)	3124

7. Windows**	Description	Area
a. U-Factor:	Dbl, default	374.50 ft²
SHGC:	Clear, default	
b. U-Factor:	N/A	ft²
SHGC:		
c. U-Factor:	N/A	ft²
SHGC:		
d. U-Factor:	N/A	ft²
SHGC:		
e. U-Factor:	N/A	ft²
SHGC:		

8. Floor Types	Insulation	Area
a. Slab-On-Grade Edge Insulation	R=0.0	3124.00 ft²
b. N/A	R=	ft²
c. N/A	R=	ft²

9. Wall Types	Insulation	Area
a. Face Brick - Wood, Exterior	R=13.0	2397.00 ft²
b. Frame - Wood, Adjacent	R=13.0	243.00 ft²
c. N/A	R=	ft²
d. N/A	R=	ft²

10. Ceiling Types	Insulation	Area
a. Under Attic (Vented)	R=30.0	3124.00 ft²
b. Knee Wall (Vented)	R=30.0	113.00 ft²
c. N/A	R=	ft²

11. Ducts
a. Sup: Attic Ret: Attic AH: Garage Sup. R= 6, 380 ft²

12. Cooling systems
a. Central Unit — Cap: 56.0 kBtu/hr, SEER: 13

13. Heating systems
a. Electric Heat Pump — Cap: 56.0 kBtu/hr, HSPF: 7.7

14. Hot water systems
a. Electric — Cap: 50 gallons, EF: 0.93

b. Conservation features
None

15. Credits — None

I certify that this home has complied with the Florida Energy Efficiency Code for Building Construction through the above energy saving features which will be installed (or exceeded) in this home before final inspection. Otherwise, a new EPL Display Card will be completed based on installed Code compliant features.

Builder Signature: _____ Date: _____

Address of New Home: _____ City/FL Zip: _____

*Note: The home's estimated Energy Performance Index is only available through the EnergyGauge USA - FlaRes2008 computer program. This is not a Building Energy Rating. If your Index is below 100, your home may qualify for incentives if you obtain a Florida Energy Gauge Rating. Contact the Energy Gauge Hotline at (321) 638-1492 or see the Energy Gauge web site at energygauge.com for information and a list of certified Raters. For information about Florida's Energy Efficiency Code for Building Construction, contact the Department of Community Affairs at (850) 487-1824.

**Label required by Section 13-104.4.5 of the Florida Building Code, Building, or Section B2.1.1 of Appendix G of the Florida Building Code, Residential, if not DEFAULT.

Permit Address: 2348W Scott Pl

28279

SUBCONTRACTOR VERIFICATION FORM

APPLICATION NUMBER ___ This is a corrected copy changing the name of the mason

ACTOR Patricia M. Johnson PHONE 386-755-4038

ED PRIOR TO THE ISSUANCE OF A PERMIT

In Columbia County one ... ng work at the permitted site. It is REQUIRED that we have records of the subcontr ... e specific work under the permit. Per Florida Statute 440 and Ordinance 89-6, a contr ... ctors to provide evidence of workers' compensation or exemption, general liabi ... cate of Competency license in Columbia County.

Any changes, the permi ... r the corrected form being submitted to this office prior to the start of that subcontractor beginning any work. Violations will result in stop work orders and/or fines.

ELECTRICAL ER13012377	Print Name Holly Electric INC License #: ER13012377	Signature ... Phone #: 386-755-5944
MECHANICAL/ A/C ___	Print Name Baxter HTG+H/C License # RH0035027	Signature ... Phone #: 386 754-6700
PLUMBING/ GAS	Print Name Cody Burns Burns Plumbing License #: CFC1427145	Signature ... Phone #: 386 623-0509
ROOFING	Print Name Darrell Turner License #: CCC 1328465	Signature ... Phone #: 755-0086
SHEET METAL	Print Name ___ License #:	Signature ___ Phone #:
FIRE SYSTEM/ SPRINKLER	Print Name ___ License#:	Signature ___ Phone #:
SOLAR	Print Name ___ License #:	Signature ___ Phone #:

Specialty License	License Number	Sub-Contractors Printed Name	Sub-Contractors Signature
MASON	000810	Roger Rominx	Roger Rominx
CONCRETE FINISHER	000218	TONY E. JORDAN SR	Tony E. Jordan
FRAMING	RG0066597	John D. Norris	...
INSULATION	RR282811528	Patricia M Johnson	Patricia M Johnson
STUCCO			
DRYWALL	000345	Kim Heitzman	Kim Heitzman
PLASTER			
CABINET INSTALLER	RR282811528	Patricia M Johnson	Patricia M Johnson
PAINTING	RR282811528	Patricia M Johnson	Patricia M Johnson
ACOUSTICAL CEILING			
GLASS			
CERAMIC TILE	RR282811528	Patricia M Johnson	Patricia M Johnson
FLOOR COVERING	RR282811528	Patricia M Johnson	Patricia M Johnson
ALUM/VINYL SIDING			
GARAGE DOOR	RR282811528	Patricia M Johnson	Patricia M Johnson
METAL BLDG ERECTOR	—		

F. S. 440.103 Building permits; identification of minimum premium policy.--Every employer shall, as a condition to applying for and receiving a building permit, show proof and certify to the permit issuer that it has secured compensation for its employees under this chapter as provided in ss. 440.10 and 440.38, and shall be presented each time the employer applies for a building permit.

RE: JOHNSON-SPEC - ROOF DESIGN INFO

Site Information:

Customer Info: JOHNSON BUILDERS Model: SPEC LOT15 ROSEWOOD ESTATES
Lot/Block: . Subdivision: .
Address: .
City: LAKE CITY State: FLORIDA

Name Address and License # of Structural Engineer of Record, If there is one, for the building.

Name: License #:
Address:
City: State:

General Truss Engineering Criteria & Design Loads (Individual Truss Design Drawings Show Special Loading Conditions):

Design Code: FBC2007 Design Program: Robbins OnLine Plus 25.0.012
Wind Code: ASCE 7-05 Wind Speed: 120 mph Floor Load: N/A psf
Roof Load: 40.0 psf

This package includes 79 individual, dated Truss Design Drawings and 0 Additional Drawings.
With my seal affixed to this sheet, I hereby certify that I am the Truss Design Engineer and this index sheet conforms to 61G15-31.003, section 5 of the Florida Board of Professional Engineers Rules.

No.	Seal#	Truss Name	Date	No.	Seal#	Truss Name	Date
1	T3555288	A1	11/25/09	18	T3555305	A18	11/25/09
2	T3555289	A2	11/25/09	19	T3555306	A19	11/25/09
3	T3555290	A3	11/25/09	20	T3555307	A20	11/25/09
4	T3555291	A4	11/25/09	21	T3555308	A21	11/25/09
5	T3555292	A5	11/25/09	22	T3555309	A22	11/25/09
6	T3555293	A6	11/25/09	23	T3555310	VJ3	11/25/09
7	T3555294	A7	11/25/09	24	T3555311	VJ2	11/25/09
8	T3555295	A8	11/25/09	25	T3555312	VCJ1	11/25/09
9	T3555296	A9	11/25/09	26	T3555313	VJ1	11/25/09
10	T3555297	A10	11/25/09	27	T3555314	J2	11/25/09
11	T3555298	A11	11/25/09	28	T3555315	J8	11/25/09
12	T3555299	A12	11/25/09	29	T3555316	J13	11/25/09
13	T3555300	A13	11/25/09	30	T3555317	J12	11/25/09
14	T3555301	A14	11/25/09	31	T3555318	J11	11/25/09
15	T3555302	A15	11/25/09	32	T3555319	CJ2	11/25/09
16	T3555303	A16	11/25/09	33	T3555320	J10	11/25/09
17	T3555304	A17	11/25/09	34	T3555321	J9	11/25/09

COLUMBIA COUNTY BUILDING DEPARTMENT
Received for FILE COPY
Code Compliance
PLANS EXAMINER

The truss drawing(s) referenced above have been prepared by Robbins Engineering, Inc. under my direct supervision based on the parameters provided by Mayo Truss Company, Inc..

Truss Design Engineer's Name: Velez, Joaquin
My license renewal date for the state of Florida is February 28, 2011.

NOTE: The seal on these drawings indicate acceptance of professional engineering responsibility solely for the truss components shown. The suitability and use of this component for any particular building is the responsibility of the building designer, per ANSI/TPI-1 Sec. 2.

OFFICE Copies - in order

6904 Parke East Boulevard
Tampa, FL 33610-4115
Phone: 813-972-1135 • Fax: 813-971-6117
www.robbinseng.com

Joaquin Velez, FL Lic. #68182
Robbins Engineering
6904 Parke East Blvd
Tampa, FL, 33610
FL Cert.#5555

November 25,2009

RE: JOHNSON-SPEC - ROOF DESIGN INFO

Site Information:

Project Customer: JOHNSON BUILDERS Project Name: SPEC LOT15 ROSEWOOD ESTATES
Lot/Block: . Subdivision: .
Address: .
City: LAKE CITY State: FLORIDA

No.	Seal#	Truss Name	Date	No.	Seal#	Truss Name	Date
35	T3555322	A23GIR	11/25/09	78	T3555365	P5	11/25/09
36	T3555323	A24	11/25/09	79	T3555366	P6	11/25/09
37	T3555324	A25	11/25/09				
38	T3555325	A26	11/25/09				
39	T3555326	A27	11/25/09				
40	T3555327	J6	11/25/09				
41	T3555328	J5	11/25/09				
42	T3555329	J4	11/25/09				
43	T3555330	CJ1	11/25/09				
44	T3555331	E2	11/25/09				
45	T3555332	E1	11/25/09				
46	T3555333	M1GIR	11/25/09				
47	T3555334	A28GIR	11/25/09				
48	T3555335	B1	11/25/09				
49	T3555336	B2	11/25/09				
50	T3555337	B3	11/25/09				
51	T3555338	B4GIR	11/25/09				
52	T3555339	B5	11/25/09				
53	T3555340	B6	11/25/09				
54	T3555341	B7	11/25/09				
55	T3555342	B8	11/25/09				
56	T3555343	B9	11/25/09				
57	T3555344	B10	11/25/09				
58	T3555345	B11	11/25/09				
59	T3555346	B12	11/25/09				
60	T3555347	C1GIR	11/25/09				
61	T3555348	C2	11/25/09				
62	T3555349	J14	11/25/09				
63	T3555350	CJ3	11/25/09				
64	T3555351	CJ4	11/25/09				
65	T3555352	D1GIR	11/25/09				
66	T3555353	J1	11/25/09				
67	T3555354	D2GIR	11/25/09				
68	T3555355	J7	11/25/09				
69	T3555356	E3GIR	11/25/09				
70	T3555357	J15	11/25/09				
71	T3555358	J16	11/25/09				
72	T3555359	J17	11/25/09				
73	T3555360	J19	11/25/09				
74	T3555361	P1	11/25/09				
75	T3555362	P2	11/25/09				
76	T3555363	P3	11/25/09				
77	T3555364	P4	11/25/09				

Job	Mark	Quan	Type	Span	P1-H1	Left OH	Right OH	Engineering
JOHNSON-SPEC	A1	1	SP	510800	3	2- 0- 0	2- 0- 0	T3555288

SPEC LOT15 ROSEWOOD ESTATES

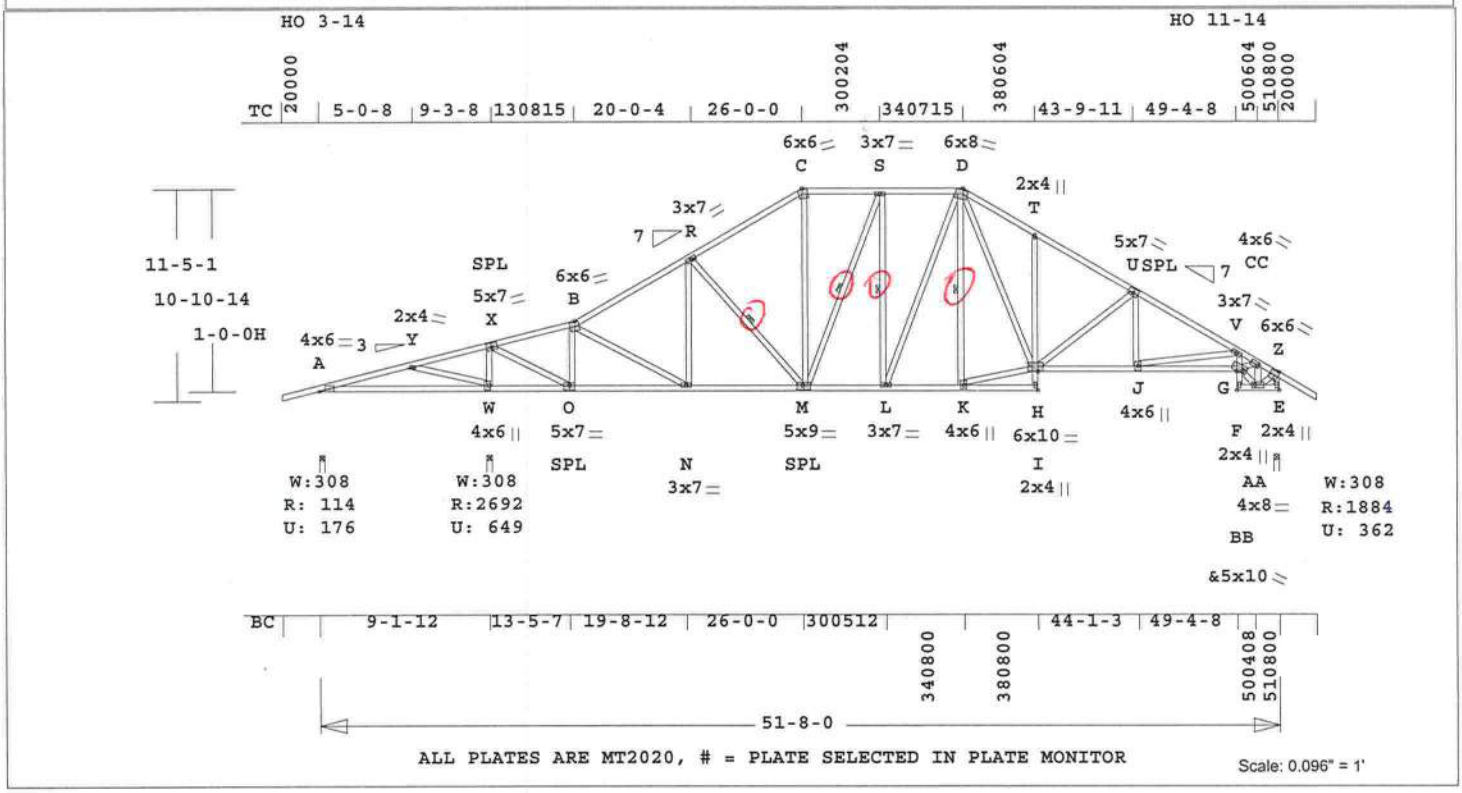

Online Plus -- Version 25.0.012
RUN DATE: 25-NOV-09

	CSI	-Size-	----Lumber----
TC	0.52	2x 4	SP-#2
BC	0.76	2x 4	SP-#2
CW	0.30	2x 4	SP-#2
WB	0.89	2x 4	SP-#2

Brace truss as follows:

	O.C.	From	To
TC	Cont.	0- 0- 0	51- 8- 0
BC	Cont.	0- 0- 0	51- 8- 0

One Continuous Lateral Brace
R -M M -S L -S K -D
Attach CLB with (2)-10d nails at each web.

psf-Ld	Dead	Live
TC	10.0	20.0
BC	10.0	0.0
TC+BC	20.0	20.0

Total 40.0 Spacing 24.0"
Lumber Duration Factor 1.25
Plate Duration Factor 1.25
TC Fb=1.15 Fc=1.10 Ft=1.10
BC Fb=1.10 Fc=1.10 Ft=1.10

Total Load Reactions (Lbs)

Jt	Down	Uplift	Horiz-
A	114	176 U	242 R
W	2692	650 U	
E	1884	363 U	282 R

Jt	Brg Size	Required
A	3.5"	1.5"
W	3.5"	2.9"
E	3.5"	2.2"

Plus 9 Wind Load Case(s)
Plus 1 UBC LL Load Case(s)
Plus 1 BC LL Load Case(s)
Plus 1 DL Load Case(s)

Membr	CSI	P Lbs	Axl-CSI-Bnd
----------Top Chords----------			
A -Y	0.42	785 T	0.13 0.29
Y -X	0.52	1425 T	0.23 0.29
X -B	0.23	1340 C	0.01 0.22
B -R	0.43	2153 C	0.11 0.32
R -C	0.43	1937 C	0.11 0.32
C -S	0.22	1666 C	0.11 0.11
S -D	0.22	1778 C	0.11 0.11
D -T	0.30	2497 C	0.04 0.26
T -U	0.38	2525 C	0.04 0.34
U -V	0.45	3080 C	0.13 0.32
V -CC	0.30	3938 C	0.19 0.11

Robbins Engineering, Inc./Online Plus™

CC-Z	0.11	1423 C	0.01	0.10
--------Bottom Chords---------				
A -W	0.36	761 C	0.00	0.36
W -O	0.38	1384 C	0.08	0.30
O -N	0.43	1334 T	0.22	0.21
N -M	0.52	1869 T	0.31	0.21
M -L	0.46	1778 T	0.29	0.17
L -K	0.40	1704 T	0.28	0.12
K -I	0.12	51 T	0.00	0.12
H -J	0.59	2673 T	0.44	0.15
J -G	0.76	3512 T	0.58	0.18
F -AA	0.05	147 T	0.02	0.03
AA-E	0.03	270 T	0.00	0.03
----------Chord-Webs----------				
I -H	0.10	60 T	0.00	0.10
H -T	0.11	284 C	0.04	0.07
F -G	0.30	32 T	0.00	0.30
G -V	0.20	356 T	0.06	0.14
----------Webs----------				
Y -W	0.22	751 T		
W -X	0.27	2337 C		
X -O	0.55	3021 T		
O -B	0.25	1340 C		
B -N	0.14	605 T		
N -R	0.04	140 T		
R -M	0.12	367 C		1 Br
M -C	0.42	679 T		
M -S	0.15	305 C		1 Br
L -S	0.04	125 T		1 Br
L -D	0.19	198 T		
K -D	0.11	245 C		1 Br
K -H	0.31	1704 T		
D -H	0.89	1179 T		
H -U	0.44	633 C		
J -U	0.05	361 T		
J -V	0.40	849 C		
G -CC	0.43	2370 T		
G -AA	0.27	1482 T		
AA-CC	0.19	1977 C		
AA-Z	0.27	1501 T		
E -Z	0.17	1850 C	WindLd	

TL Defl -0.21" in A -W L/506
LL Defl -0.17" in H -J L/999
Shear // Grain in A -Y 0.24

Plates for each ply each face.
Plate - MT20 20 Ga, Gross Area
Plate - MT2H 20 Ga, Gross Area

Jt	Type	Plt Size	X	Y	JSI
A	MT20	4.0x 6.0	Ctr	0.1	0.44
Y	MT20	2.0x 4.0	Ctr	Ctr	0.45
X	MT20	5.0x 7.0	-0.1	0.5	0.96
B	MT20	6.0x 6.0	Ctr	Ctr	0.45
R	MT20	3.0x 7.0	Ctr	Ctr	0.34
C	MT20	6.0x 6.0	1.0	-3.7	0.35
S	MT20	3.0x 7.0	Ctr	Ctr	0.36

APPROX. TRUSS WEIGHT: 466.2 LBS

D	MT20	6.0x 8.0	-1.1	-3.9	0.45
T	MT20	2.0x 4.0	Ctr	Ctr	0.28
U	MT20	5.0x 7.0	0.3	0.5	0.38
V	MT20	3.0x 7.0	Ctr	Ctr	0.28
CC	MT20	4.0x 6.0	Ctr	Ctr	0.80
Z	MT20	6.0x 6.0	Ctr	Ctr	0.46
W	MT20	4.0x 6.0	-1.2	0.2	0.35
O	MT20	5.0x 7.0	Ctr	-0.5	0.95
N	MT20	3.0x 7.0	Ctr	Ctr	0.25
M	MT20	5.0x 9.0	Ctr	-0.5	0.49
L	MT20	3.0x 7.0	Ctr	Ctr	0.36
K	MT20	4.0x 6.0	1.7	0.3	0.73
I	MT20	2.0x 4.0	Ctr	Ctr	0.58
H	MT20	6.0x10.0	Ctr	1.3	0.48
J	MT20	4.0x 6.0	1.2	0.1	0.32
G					1.24
F	MT20	2.0x 4.0	Ctr	Ctr	0.58
AA	MT20	4.0x 8.0	Ctr	Ctr	0.76
E	MT20	2.0x 4.0	Ctr	Ctr	0.65

REVIEWED BY:
Robbins Engineering, Inc.
6904 Parke East Blvd.
Tampa, FL 33610

REFER TO ROBBINS ENG. GENERAL NOTES AND SYMBOLS SHEET FOR ADDITIONAL SPECIFICATIONS.

NOTES:
Trusses Manufactured by:
Mayo Truss Co. Inc.
Analysis Conforms To:
FBC2007
TPI 2002
OH Loading
Soffit psf 2.0
This truss has been designed for 20.0 psf LL on the B.C. in areas where a rectangle
3- 6- 0 tall by
2- 0- 0 wide
will fit between the B.C. and any other member.
Design checked for 10 psf non-concurrent LL on BC.
Wind Loads - ANSI / ASCE 7-05
Truss is designed as
Components and Claddings* for Exterior zone location.
Wind Speed: 120 mph
Mean Roof Height: 15-0
Exposure Category: B
Occupancy Factor : 1.00
Building Type: Enclosed
TC Dead Load: 5.0 psf
BC Dead Load: 5.0 psf

User-defined wind-exposed BC regions --From-- ---To---
0- 0- 0 9- 1-12
Max comp. force 3938 Lbs
Max tens. force 3512 Lbs
Connector Plate Fabrication Tolerance = 20%
This truss is designed for a creep factor of 1.5 which is used to calculate total load deflection.

Joaquin Velez, FL Lic. #68182
Robbins Engineering
6904 Parke East Blvd
Tampa, FL, 33610
FL Cert.#5555

November 25,2009

Job	Mark	Quan	Type	Span	P1-H1	Left OH	Right OH	Engineering
JOHNSON-SPEC	A2	1	SP	510800	3	2- 0- 0	2- 0- 0	T3555289

SPEC LOT15 ROSEWOOD ESTATES

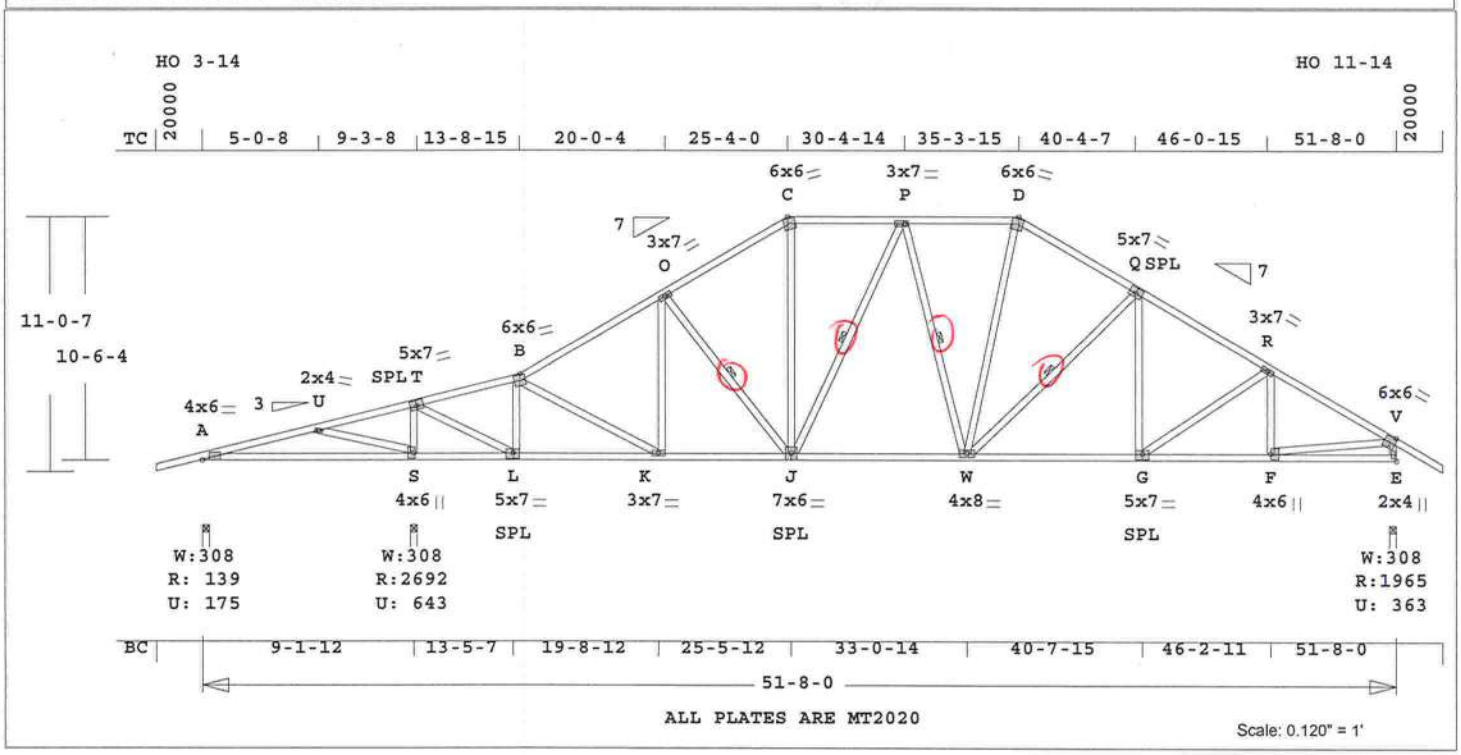

Robbins Engineering, Inc./Online Plus™ APPROX. TRUSS WEIGHT: 422.0 LBS

Online Plus -- Version 25.0.012
RUN DATE: 25-NOV-09

	CSI	-Size-	----Lumber----
TC	0.49	2x 4	SP-#2
BC	0.79	2x 4	SP-#2
WB	0.56	2x 4	SP-#2

Brace truss as follows:

	O.C.	From	To
TC	Cont.	0- 0- 0	25- 4- 0
TC	24.0"	25- 4- 0	35- 3-15
TC	Cont.	35- 3-15	51- 8- 0
BC	Cont.	0- 0- 0	51- 8- 0

One Continuous Lateral Brace
O -J J -P P -W W -Q
Attach CLB with (2)-10d nails at each web.

psf-Ld	Dead	Live
TC	10.0	20.0
BC	10.0	0.0
TC+BC	20.0	20.0

Total 40.0 Spacing 24.0"
Lumber Duration Factor 1.25
Plate Duration Factor 1.25
TC Fb=1.15 Fc=1.10 Ft=1.10
BC Fb=1.10 Fc=1.10 Ft=1.10

Total Load Reactions (Lbs)

Jt	Down	Uplift	Horiz-
A	140	175 U	232 R
S	2692	643 U	
E	1965	364 U	271 R

Jt	Brg Size	Required
A	3.5"	1.5"
S	3.5"	2.9"
E	3.5"	2.3"

Plus 9 Wind Load Case(s)
Plus 1 UBC LL Load Case(s)
Plus 1 BC LL Load Case(s)
Plus 1 DL Load Case(s)

Membr	CSI	P Lbs	Axl-CSI-Bnd
----------Top Chords----------			
A -U	0.40	688 T	0.12 0.28
U -T	0.49	1326 T	0.21 0.28
T -B	0.23	1449 C	0.01 0.22
B -O	0.41	2227 C	0.08 0.33
O -C	0.39	2056 C	0.11 0.28
C -P	0.25	1770 C	0.11 0.14
P -D	0.26	1902 C	0.02 0.24
D -Q	0.32	2024 C	0.11 0.21
Q -R	0.36	2498 C	0.12 0.24
R -V	0.37	2607 C	0.09 0.28
--------Bottom Chords---------			
A -S	0.35	672 C	0.00 0.35
S -L	0.38	1288 C	0.08 0.30
L -K	0.37	1440 T	0.24 0.13
K -J	0.65	1931 T	0.32 0.33
J -W	0.75	1910 T	0.32 0.43
W -G	0.79	2155 T	0.36 0.43
G -F	0.59	2264 T	0.38 0.21
F -E	0.15	259 T	0.00 0.15
----------Webs----------			
U -S	0.22	750 T	
S -T	0.27	2342 C	
T -L	0.56	3033 T	
L -B	0.25	1334 C	
B -K	0.12	555 T	
K -O	0.05	122 T	
O -J	0.11	353 C	1 Br
J -C	0.41	741 T	
J -P	0.16	325 C	1 Br
P -W	0.04	132 T	1 Br
W -D	0.43	743 T	
W -Q	0.24	567 C	1 Br
G -Q	0.05	335 T	
G -R	0.18	260 C	
F -R	0.05	226 C	
F -V	0.42	2287 T	
E -V	0.17	1913 C	WindLd

TL Defl -0.21" in A -S L/501
LL Defl -0.17" in J -W L/999
Shear // Grain in A -U 0.24

Plates for each ply each face.
Plate - MT20 20 Ga, Gross Area
Plate - MT2H 20 Ga, Gross Area

Jt	Type	Plt Size	X	Y	JSI
A	MT20	4.0x 6.0	Ctr	0.1	0.44
U	MT20	2.0x 4.0	Ctr	Ctr	0.45
T	MT20	5.0x 7.0	-0.1	0.5	0.96
B	MT20	6.0x 6.0	Ctr	Ctr	0.45
O	MT20	3.0x 7.0	Ctr	Ctr	0.35
C	MT20	6.0x 6.0	1.0	-3.7	0.37
P	MT20	3.0x 7.0	Ctr	Ctr	0.31
D	MT20	6.0x 6.0	-1.0	-3.7	0.37
Q	MT20	5.0x 7.0	0.3	0.5	0.38
R	MT20	3.0x 7.0	Ctr	Ctr	0.28
V	MT20	6.0x 6.0	Ctr	Ctr	0.80
S	MT20	4.0x 6.0	-1.2	0.2	0.35
L	MT20	5.0x 7.0	-0.5	-0.5	0.87
K	MT20	3.0x 7.0	Ctr	Ctr	0.23
J	MT20	7.0x 6.0	Ctr	Ctr	0.46
W	MT20	4.0x 8.0	Ctr	Ctr	0.27
G	MT20	5.0x 7.0	Ctr	-0.5	0.47
F	MT20	4.0x 6.0	2.2	0.2	0.88
E	MT20	2.0x 4.0	Ctr	Ctr	0.67

REVIEWED BY:
Robbins Engineering, Inc.
6904 Parke East Blvd.
Tampa, FL 33610

REFER TO ROBBINS ENG. GENERAL NOTES AND SYMBOLS SHEET FOR ADDITIONAL SPECIFICATIONS.

NOTES:
Trusses Manufactured by:
Mayo Truss Co. Inc.
Analysis Conforms To:
FBC2007
TPI 2002
OH Loading
Soffit psf 2.0
This truss has been designed for 20.0 psf LL on the B.C. in areas where a rectangle
3- 6- 0 tall by
2- 0- 0 wide
will fit between the B.C. and any other member.
Design checked for 10 psf non-concurrent LL on BC.
Wind Loads - ANSI / ASCE 7-05
Truss is designed as Components and Claddings* for Exterior zone location.
Wind Speed: 120 mph
Mean Roof Height: 15-0
Exposure Category: B
Occupancy Factor : 1.00
Building Type: Enclosed
TC Dead Load: 5.0 psf
BC Dead Load: 5.0 psf
User-defined wind-exposed BC regions --From-- ---To---
0- 0- 0 9- 1-12
Max comp. force 2607 Lbs
Max tens. force 3033 Lbs
Connector Plate Fabrication Tolerance = 20%
This truss is designed for a creep factor of 1.5 which is used to calculate total load deflection.

Joaquin Velez, FL Lic. #68182
Robbins Engineering
6904 Parke East Blvd
Tampa, FL, 33610
FL Cert.#5555

November 25,2009

Job	Mark	Quan	Type	Span	P1-H1	Left OH	Right OH	Engineering
JOHNSON-SPEC	A3	3	SP	510800	3	2- 0- 0	2- 0- 0	T3555290

SPEC LOT15 ROSEWOOD ESTATES

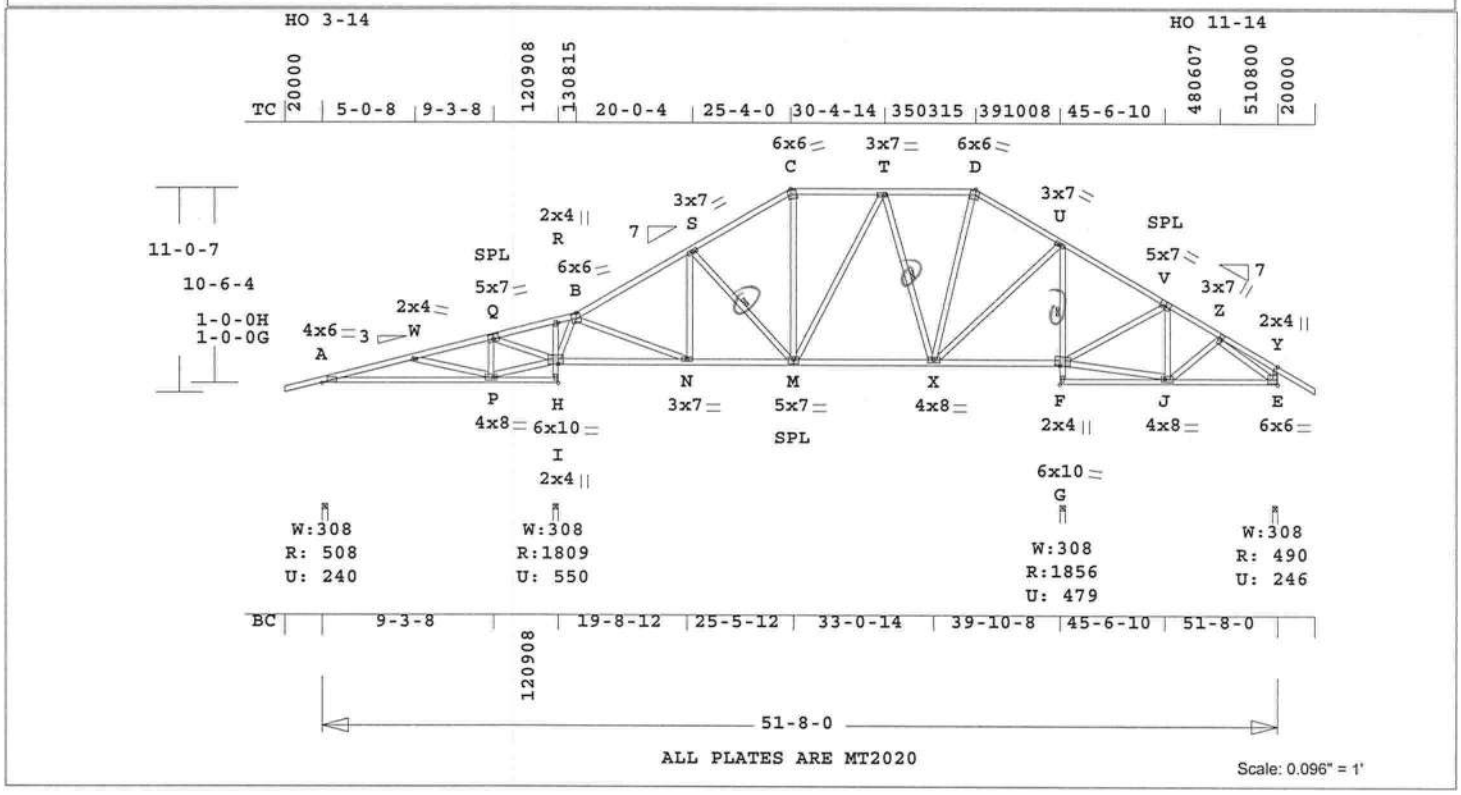

Online Plus -- Version 25.0.012
RUN DATE: 25-NOV-09

	CSI	-Size-	----Lumber----
TC	0.43	2x 4	SP-#2
BC	0.50	2x 4	SP-#2
CW	0.21	2x 4	SP-#2
WB	0.35	2x 4	SP-#2

Brace truss as follows:

	O.C.	From	To
TC	Cont.	0- 0- 0	25- 4- 0
TC	24.0"	25- 4- 0	35- 3-15
TC	Cont.	35- 3-15	51- 8- 0
BC	Cont.	0- 0- 0	51- 8- 0

One Continuous Lateral Brace
S -M T -X F -U
Attach CLB with (2)-10d nails at each web.

psf-Ld	Dead	Live
TC	10.0	20.0
BC	10.0	0.0
TC+BC	20.0	20.0
Total	40.0	Spacing 24.0"

Lumber Duration Factor 1.25
Plate Duration Factor 1.25
TC Fb=1.15 Fc=1.10 Ft=1.10
BC Fb=1.10 Fc=1.10 Ft=1.10

Total Load Reactions (Lbs)

Jt	Down	Uplift	Horiz-
A	509	241 U	232 R
I	1809	550 U	
F	1857	479 U	
E	490	246 U	270 R

Jt	Brg Size	Required
A	3.5"	1.5"
I	3.5"	1.9"
F	3.5"	2.0"
E	3.5"	1.5"

Plus 9 Wind Load Case(s)
Plus 1 UBC LL Load Case(s)
Plus 1 BC LL Load Case(s)
Plus 1 DL Load Case(s)

Robbins Engineering, Inc./Online Plus™

Membr	CSI	P Lbs	Axl-CSI-Bnd
----------Top Chords----------			
A -W	0.43	953 T	0.12 0.31
W -Q	0.25	340 T	0.04 0.21
Q -R	0.25	706 T	0.12 0.13
R -B	0.23	654 T	0.10 0.13
B -S	0.34	954 C	0.00 0.34
S -C	0.34	901 C	0.00 0.34
C -T	0.25	768 C	0.00 0.25
T -D	0.25	575 C	0.00 0.25
D -U	0.29	658 C	0.00 0.29
U -V	0.33	186 T	0.04 0.29
V -Z	0.22	399 T	0.05 0.17
Z -Y	0.08	68 T	0.00 0.08
--------Bottom Chords---------			
A -P	0.38	947 C	0.06 0.32
P -I	0.32	120 C	0.00 0.32
H -N	0.29	463 T	0.00 0.29
N -M	0.43	828 T	0.13 0.30
M -X	0.50	704 T	0.11 0.39
X -G	0.39	301 T	0.00 0.39
F -J	0.25	106 C	0.00 0.25
J -E	0.27	280 T	0.02 0.25
----------Chord-Webs----------			
I -H	0.21	1805 C	0.00 0.21
H -R	0.11	285 C	0.00 0.11
F -G	0.21	1813 C	0.02 0.19
G -U	0.13	1414 C	0.13 0.00
----------Webs----------			
W -P	0.20	714 T	
P -Q	0.04	415 C	
P -H	0.05	285 T	
Q -H	0.18	1036 T	
H -B	0.15	1190 C	
B -N	0.35	1074 T	
N -S	0.15	273 C	
S -M	0.07	293 C	1 Br
M -C	0.03	194 T	
M -T	0.02	155 T	
T -X	0.17	465 C	1 Br
X -D	0.03	111 T	
X -U	0.32	971 T	
G -V	0.26	568 T	
G -J	0.08	304 T	
J -V	0.07	286 C	
J -Z	0.02	132 C	
Z -E	0.07	342 T	
E -Y	0.03	231 T	WindLd

TL Defl -0.23" in A -P L/634
LL Defl -0.10" in A -P L/999
Shear // Grain in R -B 0.22

Plates for each ply each face.
Plate - MT20 20 Ga, Gross Area
Plate - MT2H 20 Ga, Gross Area

Jt	Type	Plt Size	X	Y	JSI
A	MT20	4.0x 6.0	Ctr	0.1	0.44
W	MT20	2.0x 4.0	Ctr	Ctr	0.43
Q	MT20	5.0x 7.0	-0.1	0.5	0.38
R	MT20	2.0x 4.0	Ctr	Ctr	0.30
B	MT20	6.0x 6.0	Ctr	Ctr	0.47
S	MT20	3.0x 7.0	Ctr	Ctr	0.33
C	MT20	6.0x 6.0	1.0	-3.7	0.33
T	MT20	3.0x 7.0	Ctr	Ctr	0.29
D	MT20	6.0x 6.0	-1.0	-3.7	0.33
U	MT20	3.0x 7.0	Ctr	Ctr	0.74
V	MT20	5.0x 7.0	0.3	0.5	0.38
Z	MT20	3.0x 7.0	0.4	-0.3	0.45
Y	MT20	2.0x 4.0	Ctr	Ctr	0.28
P	MT20	4.0x 8.0	Ctr	Ctr	0.30
I	MT20	2.0x 4.0	Ctr	Ctr	0.92
H	MT20	6.0x10.0	Ctr	1.2	0.44
N	MT20	3.0x 7.0	Ctr	Ctr	0.44
M	MT20	5.0x 7.0	Ctr	-0.5	0.47
X	MT20	4.0x 8.0	Ctr	Ctr	0.57
G	MT20	6.0x10.0	0.1	1.0	0.33
F	MT20	2.0x 4.0	Ctr	Ctr	0.93
J	MT20	4.0x 8.0	Ctr	Ctr	0.24
E	MT20	6.0x 6.0	Ctr	Ctr	0.14

APPROX. TRUSS WEIGHT: 431.5 LBS

REVIEWED BY:
Robbins Engineering, Inc.
6904 Parke East Blvd.
Tampa, FL 33610

REFER TO ROBBINS ENG. GENERAL NOTES AND SYMBOLS SHEET FOR ADDITIONAL SPECIFICATIONS.

NOTES:
Trusses Manufactured by:
Mayo Truss Co. Inc.
Analysis Conforms To:
FBC2007
TPI 2002
OH Loading
Soffit psf 2.0
This truss has been designed for 20.0 psf LL on the B.C. in areas where a rectangle
3- 6- 0 tall by
2- 0- 0 wide
will fit between the B.C. and any other member.
Design checked for 10 psf non-concurrent LL on BC.
Wind Loads - ANSI / ASCE 7-05
Truss is designed as Components and Claddings* for Exterior zone location.
Wind Speed: 120 mph
Mean Roof Height: 15-0
Exposure Category: B
Occupancy Factor : 1.00
Building Type: Enclosed
TC Dead Load: 5.0 psf
BC Dead Load: 5.0 psf
User-defined wind-exposed BC regions --From-- ---To---
0- 0- 0 12- 9- 8
39-10- 8 51- 8- 0
Max comp. force 1813 Lbs

Max tens. force 1164 Lbs
Connector Plate Fabrication Tolerance = 20%
This truss is designed for a creep factor of 1.5 which is used to calculate total load deflection.

Joaquin Velez, FL Lic. #68182
Robbins Engineering
6904 Parke East Blvd
Tampa, FL, 33610
FL Cert.#5555

November 25,2009

Job	Mark	Quan	Type	Span	P1-H1	Left OH	Right OH	Engineering
JOHNSON-SPEC	A4	2	SP	510800	3	2- 0- 0	2- 0- 0	T3555291

SPEC LOT15 ROSEWOOD ESTATES

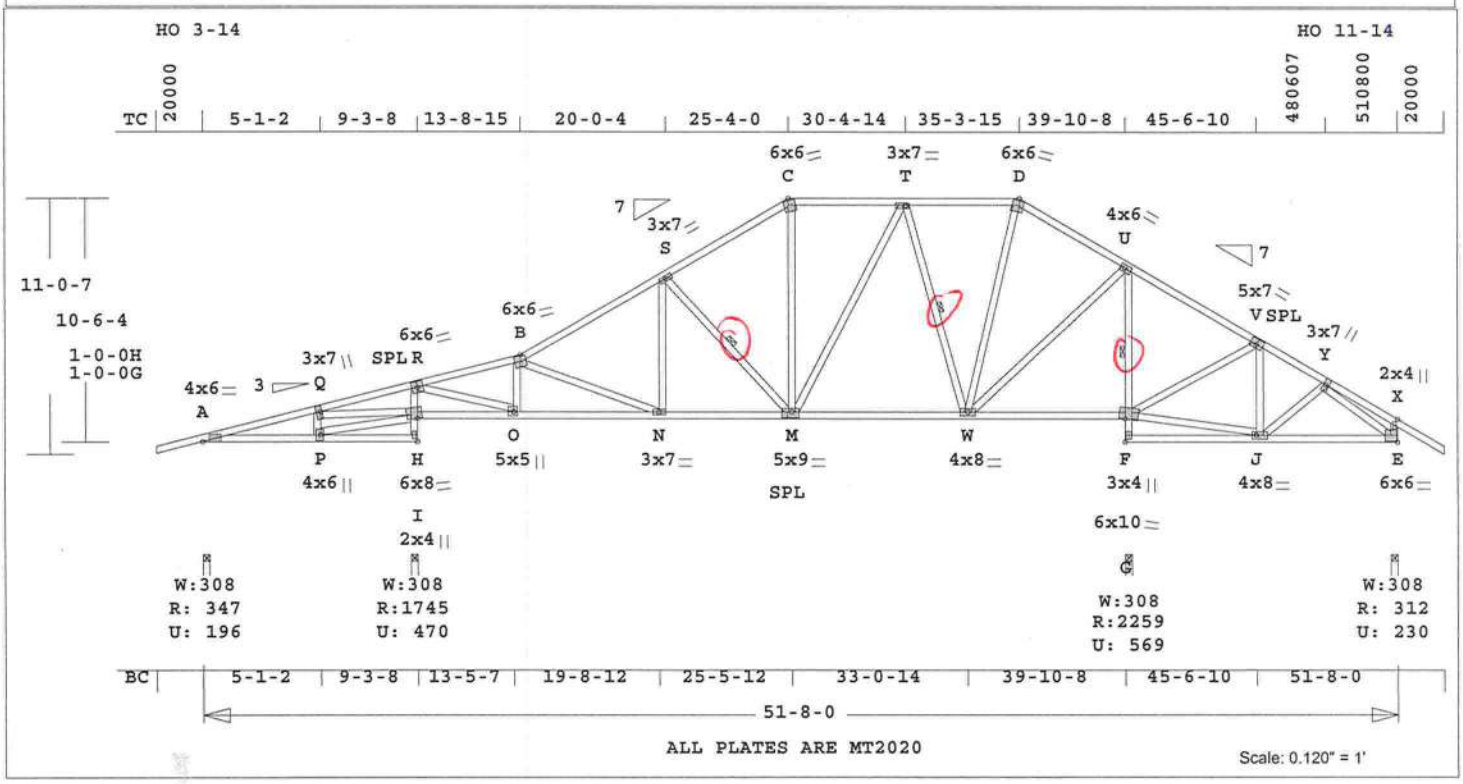

Robbins Engineering, Inc./Online Plus™

Online Plus -- Version 25.0.012
RUN DATE: 25-NOV-09

	CSI	-Size-	----Lumber----
TC	0.40	2x 4	SP-#2
BC	0.50	2x 4	SP-#2
CW	0.25	2x 4	SP-#2
WB	0.55	2x 4	SP-#2

Brace truss as follows:

	O.C.	From	To
TC	Cont.	0- 0- 0	25- 4- 0
TC	24.0"	25- 4- 0	35- 3-15
TC	Cont.	35- 3-15	51- 8- 0
BC	Cont.	0- 0- 0	51- 8- 0

One Continuous Lateral Brace
S -M T -W F -U
Attach CLB with (2)-10d nails at each web.

psf-Ld	Dead	Live
TC	10.0	20.0
BC	10.0	0.0
TC+BC	20.0	20.0

Total 40.0 Spacing 24.0"
Lumber Duration Factor 1.25
Plate Duration Factor 1.25
TC Fb=1.15 Fc=1.10 Ft=1.10
BC Fb=1.10 Fc=1.10 Ft=1.10

Total Load Reactions (Lbs)

Jt	Down	Uplift	Horiz-
A	348	196 U	232 R
I	1745	470 U	
F	2259	570 U	
E	312	231 U	270 R

Jt	Brg Size	Required
A	3.5"	1.5"
I	3.5"	1.9"
F	3.5"	2.4"
E	3.5"	1.5"

Plus 9 Wind Load Case(s)
Plus 1 UBC LL Load Case(s)
Plus 1 BC LL Load Case(s)
Plus 1 DL Load Case(s)

Membr	CSI	P Lbs	Axl-CSI-Bnd
----------Top Chords----------			
A -Q	0.24	575 T	0.07 0.17
Q -R	0.38	917 T	0.15 0.23
R -B	0.24	1464 C	0.01 0.23
B -S	0.40	1426 C	0.01 0.39
S -C	0.39	1055 C	0.00 0.39
C -T	0.26	900 C	0.00 0.26
T -D	0.26	523 C	0.00 0.26
D -U	0.29	606 C	0.00 0.29
U -V	0.39	550 T	0.10 0.29
V -Y	0.23	281 T	0.01 0.22
Y -X	0.07	67 T	0.00 0.07
--------Bottom Chords---------			
A -P	0.15	563 C	0.00 0.15
P -I	0.12	88 C	0.00 0.12
H -O	0.18	883 C	0.00 0.18
O -N	0.37	1444 T	0.24 0.13
N -M	0.50	1245 T	0.20 0.30
M -W	0.50	718 T	0.12 0.38
W -G	0.38	469 C	0.00 0.38
F -J	0.25	115 C	0.00 0.25
J -E	0.25	250 T	0.00 0.25
----------Chord-Webs----------			
I -H	0.20	1715 C	0.02 0.18
H -R	0.14	1528 C	0.14 0.00
F -G	0.25	2216 C	0.04 0.21
G -U	0.17	1821 C	0.12 0.05
----------Webs----------			
P -Q	0.02	155 T	
P -H	0.17	614 C	
Q -H	0.28	1129 T	
R -O	0.44	2401 T	
O -B	0.07	593 C	
B -N	0.16	239 C	
N -S	0.04	298 T	
S -M	0.14	537 C	1 Br
M -C	0.09	252 T	
M -T	0.20	389 T	
T -W	0.26	700 C	1 Br
W -D	0.04	92 T	
W -U	0.55	1337 T	
G -V	0.31	599 T	
G -J	0.08	224 T	
J -V	0.08	317 C	
J -Y	0.03	166 C	
Y -E	0.03	229 T	
E -X	0.03	231 T	WindLd

TL Defl -0.21" in M -W L/999
LL Defl -0.10" in M -W L/999
Shear // Grain in B -S 0.23

Plates for each ply each face.
Plate - MT20 20 Ga, Gross Area
Plate - MT2H 20 Ga, Gross Area

Jt	Type	Plt Size	X	Y	JSI
A	MT20	4.0x 6.0	Ctr	0.1	0.44
Q	MT20	3.0x 7.0	1.0	Ctr	0.58
R	MT20	6.0x 6.0	Ctr	Ctr	0.71
B	MT20	6.0x 6.0	Ctr	Ctr	0.40
S	MT20	3.0x 7.0	Ctr	Ctr	0.33
C	MT20	6.0x 6.0	1.0	-3.7	0.33
T	MT20	3.0x 7.0	Ctr	Ctr	0.29
D	MT20	6.0x 6.0	-1.0	-3.7	0.33
U	MT20	4.0x 6.0	0.4	-0.3	0.77
V	MT20	5.0x 7.0	0.3	0.5	0.38
Y	MT20	3.0x 7.0	0.4	-0.3	0.45
X	MT20	2.0x 4.0	Ctr	Ctr	0.28
P	MT20	4.0x 6.0	1.2	0.1	0.27
I	MT20	2.0x 4.0	Ctr	Ctr	0.88
H	MT20	6.0x 8.0	Ctr	1.9	0.52
O	MT20	5.0x 5.0	-2.2	0.3	0.82
N	MT20	3.0x 7.0	Ctr	Ctr	0.23
M	MT20	5.0x 9.0	1.5	-0.5	0.43
W	MT20	4.0x 8.0	Ctr	Ctr	0.78
G	MT20	6.0x10.0	0.1	1.0	0.33
F	MT20	3.0x 4.0	Ctr	Ctr	0.76
J	MT20	4.0x 8.0	Ctr	Ctr	0.24
E	MT20	6.0x 6.0	Ctr	Ctr	0.14

REVIEWED BY:
Robbins Engineering, Inc.
6904 Parke East Blvd.
Tampa, FL 33610

REFER TO ROBBINS ENG. GENERAL NOTES AND SYMBOLS SHEET FOR ADDITIONAL SPECIFICATIONS.

NOTES:
Trusses Manufactured by:
Mayo Truss Co. Inc.
Analysis Conforms To:
FBC2007
TPI 2002
OH Loading
Soffit psf 2.0
This truss has been designed for 20.0 psf LL on the B.C. in areas where a rectangle
3- 6- 0 tall by
2- 0- 0 wide
will fit between the B.C. and any other member.
Design checked for 10 psf non-concurrent LL on BC.
Wind Loads - ANSI / ASCE 7-05
Truss is designed as
Components and Claddings* for Exterior zone location.
Wind Speed: 120 mph
Mean Roof Height: 15-0
Exposure Category: B
Occupancy Factor : 1.00
Building Type: Enclosed
TC Dead Load: 5.0 psf
BC Dead Load: 5.0 psf
User-defined wind-exposed BC regions

--From--	---To---
0- 0- 0	9- 3- 8
39-10- 8	51- 8- 0

Max comp. force 2216 Lbs

APPROX. TRUSS WEIGHT: 429.5 LBS

Max tens. force 2401 Lbs
Connector Plate Fabrication Tolerance = 20%
This truss is designed for a creep factor of 1.5 which is used to calculate total load deflection.

Joaquin Velez, FL Lic. #68182
Robbins Engineering
6904 Parke East Blvd
Tampa, FL, 33610
FL Cert.#5555

November 25,2009

Job	Mark	Quan	Type	Span	P1-H1	Left OH	Right OH	Engineering
JOHNSON-SPEC	A5	1	SP	510800	3	2- 0- 0	2- 0- 0	T3555292

SPEC LOT15 ROSEWOOD ESTATES

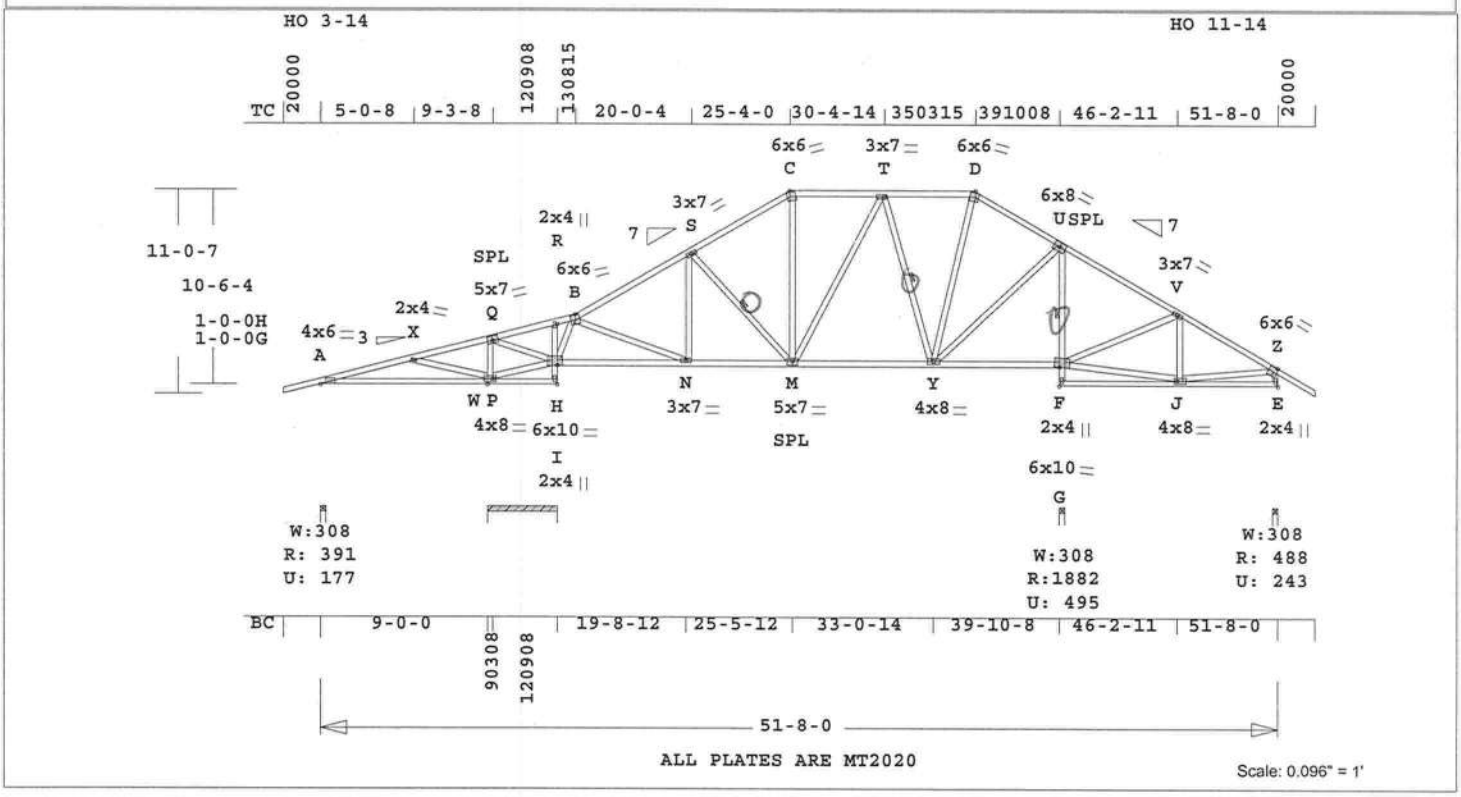

Online Plus -- Version 25.0.012
RUN DATE: 25-NOV-09

	CSI	-Size-	----Lumber----
TC	0.38	2x 4	SP-#2
BC	0.51	2x 4	SP-#2
CW	0.20	2x 4	SP-#2
WB	0.36	2x 4	SP-#2

Brace truss as follows:

	O.C.	From	To
TC	Cont.	0- 0- 0	25- 4- 0
TC	24.0"	25- 4- 0	35- 3-15
TC	Cont.	35- 3-15	51- 8- 0
BC	Cont.	0- 0- 0	51- 8- 0

One Continuous Lateral Brace
S -M T -Y F -U
Attach CLB with (2)-10d nails at each web.

psf-Ld	Dead	Live
TC	10.0	20.0
BC	10.0	0.0
TC+BC	20.0	20.0

Total 40.0 Spacing 24.0"
Lumber Duration Factor 1.25
Plate Duration Factor 1.25
TC Fb=1.15 Fc=1.10 Ft=1.10
BC Fb=1.10 Fc=1.10 Ft=1.10

Total Load Reactions (Lbs)

Jt	Down	Uplift	Horiz-
A	391	178 U	232 R
I	1903	555 U	
F	1883	495 U	
E	488	244 U	271 R

Jt	Brg Size	Required
A	3.5"	1.5"
I	45.5"	108"-to- 154"
F	3.5"	2.0"
E	3.5"	1.5"

Plus 9 Wind Load Case(s)
Plus 1 UBC LL Load Case(s)
Plus 1 BC LL Load Case(s)
Plus 1 DL Load Case(s)

Robbins Engineering, Inc./Online Plus™

Membr	CSI	P Lbs	Axl-CSI-Bnd
----------Top Chords----------			
A -X	0.38	391 T	0.05 0.33
X -Q	0.29	351 T	0.05 0.24
Q -R	0.20	425 T	0.06 0.14
R -B	0.17	384 T	0.06 0.11
B -S	0.34	1039 C	0.00 0.34
S -C	0.35	940 C	0.06 0.29
C -T	0.25	802 C	0.00 0.25
T -D	0.25	589 C	0.00 0.25
D -U	0.31	674 C	0.00 0.31
U -V	0.37	183 T	0.01 0.36
V -Z	0.36	407 T	0.00 0.36
--------Bottom Chords---------			
A -P	0.35	403 C	0.02 0.33
P -I	0.33	116 C	0.00 0.33
H -N	0.28	148 T	0.00 0.28
N -M	0.45	903 T	0.15 0.30
M -Y	0.51	726 T	0.12 0.39
Y -G	0.39	310 T	0.00 0.39
F -J	0.26	104 C	0.00 0.26
J -E	0.26	259 T	0.00 0.26
----------Chord-Webs----------			
I -H	0.20	1308 C	0.00 0.20
H -R	0.11	240 C	0.00 0.11
F -G	0.20	1831 C	0.02 0.18
G -U	0.13	1449 C	0.07 0.06
----------Webs----------			
X -P	0.21	742 T	
P -Q	0.02	186 C	
P -H	0.05	339 T	
Q -H	0.03	166 C	
H -B	0.15	1135 C	
B -N	0.19	889 T	
N -S	0.11	208 C	
S -M	0.07	291 C	1 Br
M -C	0.06	209 T	
M -T	0.05	174 T	
T -Y	0.18	490 C	1 Br
Y -D	0.02	117 T	
Y -U	0.36	990 T	
G -V	0.33	617 T	
G -J	0.14	357 T	
J -V	0.04	215 T	
J -Z	0.11	276 C	
E -Z	0.06	463 T	WindLd

TL Defl -0.22" in A -P L/484
LL Defl -0.10" in A -P L/999
Shear // Grain in A -X 0.22

Plates for each ply each face.
Plate - MT20 20 Ga, Gross Area
Plate - MT2H 20 Ga, Gross Area

Jt	Type	Plt Size	X	Y	JSI
A	MT20	4.0x 6.0	Ctr	0.1	0.44
X	MT20	2.0x 4.0	Ctr	Ctr	0.44
Q	MT20	5.0x 7.0	-0.1	0.5	0.38
R	MT20	2.0x 4.0	Ctr	Ctr	0.30
B	MT20	6.0x 6.0	Ctr	Ctr	0.47
S	MT20	3.0x 7.0	Ctr	Ctr	0.33
C	MT20	6.0x 6.0	1.0	-3.7	0.33
T	MT20	3.0x 7.0	Ctr	Ctr	0.29
D	MT20	6.0x 6.0	-1.0	-3.7	0.33
U	MT20	6.0x 8.0	Ctr	0.1	0.38
V	MT20	3.0x 7.0	Ctr	Ctr	0.25
Z	MT20	6.0x 6.0	Ctr	Ctr	0.14
P	MT20	4.0x 8.0	Ctr	Ctr	0.31
I	MT20	2.0x 4.0	Ctr	Ctr	0.67
H	MT20	6.0x10.0	Ctr	1.2	0.44
N	MT20	3.0x 7.0	Ctr	Ctr	0.36
M	MT20	5.0x 7.0	Ctr	-0.5	0.47
Y	MT20	4.0x 8.0	Ctr	Ctr	0.58
G	MT20	6.0x10.0	0.1	1.1	0.33
F	MT20	2.0x 4.0	Ctr	Ctr	0.94
J	MT20	4.0x 8.0	Ctr	Ctr	0.23
E	MT20	2.0x 4.0	Ctr	Ctr	0.38

APPROX. TRUSS WEIGHT: 428.8 LBS

REVIEWED BY:
Robbins Engineering, Inc.
6904 Parke East Blvd.
Tampa, FL 33610

REFER TO ROBBINS ENG. GENERAL NOTES AND SYMBOLS SHEET FOR ADDITIONAL SPECIFICATIONS.

NOTES:
Trusses Manufactured by:
Mayo Truss Co. Inc.
Analysis Conforms To:
FBC2007
TPI 2002
OH Loading
Soffit psf 2.0
This truss has been designed for 20.0 psf LL on the B.C. in areas where a rectangle
3- 6- 0 tall by
2- 0- 0 wide
will fit between the B.C. and any other member.
Design checked for 10 psf non-concurrent LL on BC.
Wind Loads - ANSI / ASCE 7-05
Truss is designed as Components and Claddings* for Exterior zone location.
Wind Speed: 120 mph
Mean Roof Height: 15-0
Exposure Category: B
Occupancy Factor : 1.00
Building Type: Enclosed
TC Dead Load: 5.0 psf
BC Dead Load: 5.0 psf
User-defined wind-exposed BC regions --From-- ---To---
0- 0- 0 10-10-12
39-10- 8 51- 8- 0
Max comp. force 1831 Lbs
Max tens. force 990 Lbs
Connector Plate Fabrication Tolerance = 20%

This truss is designed for a creep factor of 1.5 which is used to calculate total load deflection.

Joaquin Velez, FL Lic. #68182
Robbins Engineering
6904 Parke East Blvd
Tampa, FL, 33610
FL Cert.#5555

November 25,2009

Job	Mark	Quan	Type	Span	P1-H1	Left OH	Right OH	Engineering
JOHNSON-SPEC	A6	1	SP	510800	3	2- 0- 0	2- 0- 0	T3555293

SPEC LOT15 ROSEWOOD ESTATES

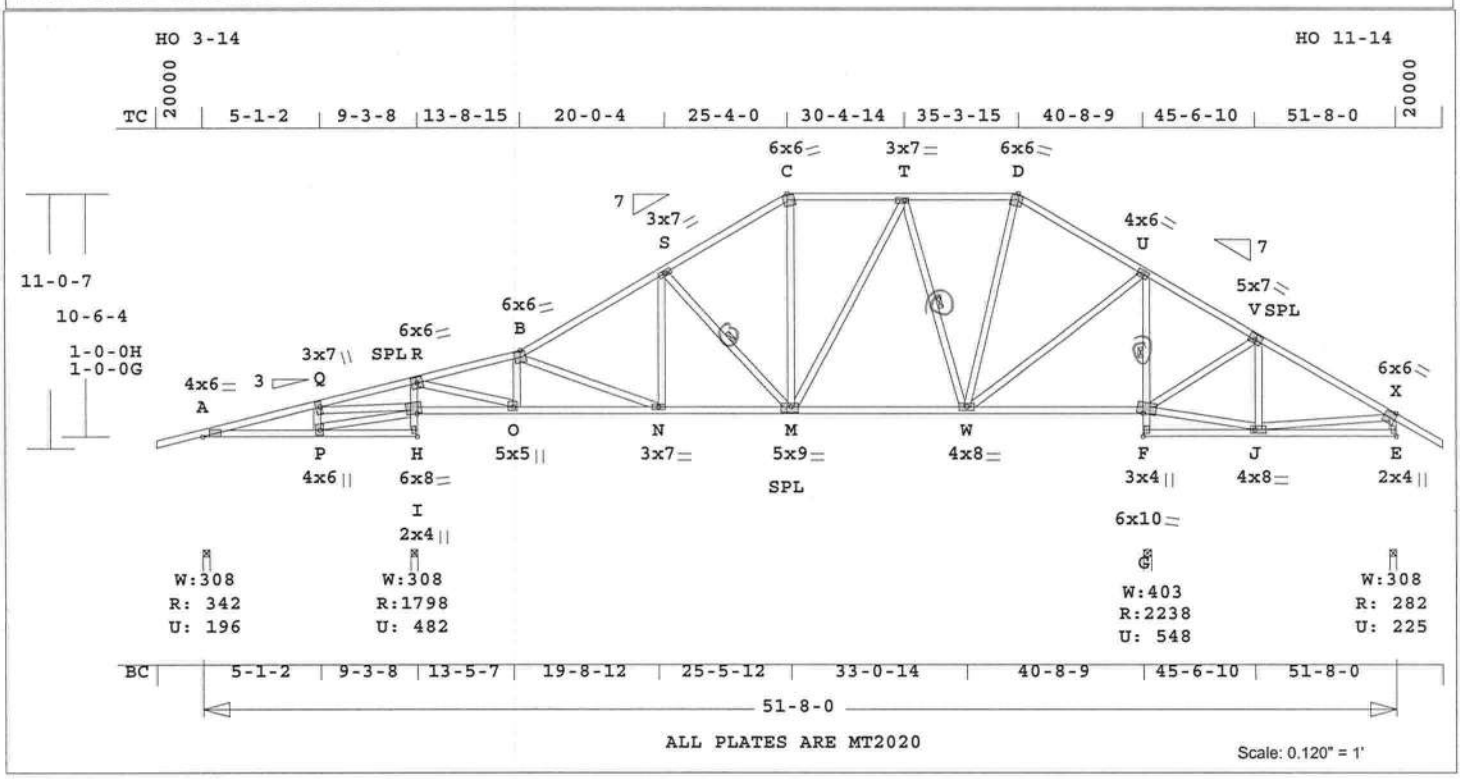

Robbins Engineering, Inc./Online Plus™

Online Plus -- Version 25.0.012
RUN DATE: 25-NOV-09

	CSI	-Size-	----Lumber----
TC	0.40	2x 4	SP-#2
BC	0.52	2x 4	SP-#2
CW	0.30	2x 4	SP-#2
WB	0.61	2x 4	SP-#2

Brace truss as follows:

	O.C.	From	To
TC	Cont.	0- 0- 0	25- 4- 0
TC	24.0"	25- 4- 0	35- 3-15
TC	Cont.	35- 3-15	51- 8- 0
BC	Cont.	0- 0- 0	51- 8- 0

One Continuous Lateral Brace
S -M T -W F -U
Attach CLB with (2)-10d nails at each web.

psf-Ld	Dead	Live
TC	10.0	20.0
BC	10.0	0.0
TC+BC	20.0	20.0
Total	40.0	Spacing 24.0"

Lumber Duration Factor 1.25
Plate Duration Factor 1.25
TC Fb=1.15 Fc=1.10 Ft=1.10
BC Fb=1.10 Fc=1.10 Ft=1.10

Total Load Reactions (Lbs)

Jt	Down	Uplift	Horiz-
A	342	196 U	232 R
I	1798	482 U	
F	2239	549 U	
E	283	225 U	271 R

Jt	Brg Size	Required
A	3.5"	1.5"
I	3.5"	1.9"
F	4.2"	2.4"
E	3.5"	1.5"

Plus 9 Wind Load Case(s)
Plus 1 UBC LL Load Case(s)
Plus 1 BC LL Load Case(s)
Plus 1 DL Load Case(s)

Membr	CSI	P Lbs	Axl-CSI-Bnd
----------Top Chords----------			
A -Q	0.24	567 T	0.07 0.17
Q -R	0.39	953 T	0.16 0.23
R -B	0.24	1532 C	0.01 0.23
B -S	0.39	1515 C	0.01 0.38
S -C	0.39	1145 C	0.01 0.38
C -T	0.24	978 C	0.00 0.24
T -D	0.24	645 C	0.00 0.24
D -U	0.26	733 C	0.00 0.26
U -V	0.40	532 T	0.07 0.33
V -X	0.36	210 T	0.03 0.33
--------Bottom Chords---------			
A -P	0.15	554 C	0.00 0.15
P -I	0.13	92 C	0.00 0.13
H -O	0.18	917 C	0.00 0.18
O -N	0.38	1511 T	0.25 0.13
N -M	0.51	1321 T	0.22 0.29
M -W	0.52	818 T	0.13 0.39
W -G	0.39	459 C	0.00 0.39
F -J	0.22	152 C	0.00 0.22
J -E	0.22	259 T	0.00 0.22
----------Chord-Webs----------			
I -H	0.21	1768 C	0.02 0.19
H -R	0.14	1583 C	0.14 0.00
F -G	0.30	2204 C	0.04 0.26
G -U	0.16	1777 C	0.16 0.00
----------Webs----------			
P -Q	0.02	158 T	
P -H	0.16	606 C	
Q -H	0.29	1135 T	
R -O	0.46	2505 T	
O -B	0.07	624 C	
B -N	0.15	234 C	
N -S	0.04	298 T	
S -M	0.14	535 C	1 Br
M -C	0.12	287 T	
M -T	0.17	338 T	
T -W	0.23	642 C	1 Br
W -D	0.03	125 T	
W -U	0.61	1366 T	
G -V	0.23	565 T	
G -J	0.05	237 T	
J -V	0.06	256 T	
J -X	0.09	178 C	
E -X	0.05	350 T	WindLd

TL Defl -0.22" in M -W L/999
LL Defl -0.11" in M -W L/999
Shear // Grain in B -S 0.23

Plates for each ply each face.
Plate - MT20 20 Ga, Gross Area
Plate - MT2H 20 Ga, Gross Area

Jt	Type	Plt Size	X	Y	JSI
A	MT20	4.0x 6.0	Ctr	0.1	0.44
Q	MT20	3.0x 7.0	1.0	Ctr	0.58
R	MT20	6.0x 6.0	Ctr	Ctr	0.74
B	MT20	6.0x 6.0	Ctr	Ctr	0.40
S	MT20	3.0x 7.0	Ctr	Ctr	0.33
C	MT20	6.0x 6.0	1.0	-3.7	0.33
T	MT20	3.0x 7.0	-1.3	Ctr	0.39
D	MT20	6.0x 6.0	-1.0	-3.7	0.33
U	MT20	4.0x 6.0	Ctr	Ctr	0.88
V	MT20	5.0x 7.0	0.3	0.5	0.38
X	MT20	6.0x 6.0	Ctr	Ctr	0.14
P	MT20	4.0x 6.0	1.2	0.1	0.27
I	MT20	2.0x 4.0	Ctr	Ctr	0.91
H	MT20	6.0x 8.0	Ctr	1.9	0.52
O	MT20	5.0x 5.0	-2.2	0.3	0.86
N	MT20	3.0x 7.0	Ctr	Ctr	0.23
M	MT20	5.0x 9.0	1.5	-0.5	0.43
W	MT20	4.0x 8.0	Ctr	Ctr	0.78
G	MT20	6.0x10.0	0.2	1.0	0.34
F	MT20	3.0x 4.0	Ctr	Ctr	0.75
J	MT20	4.0x 8.0	Ctr	Ctr	0.24
E	MT20	2.0x 4.0	Ctr	Ctr	0.31

APPROX. TRUSS WEIGHT: 423.6 LBS

REVIEWED BY:
Robbins Engineering, Inc.
6904 Parke East Blvd.
Tampa, FL 33610

REFER TO ROBBINS ENG. GENERAL NOTES AND SYMBOLS SHEET FOR ADDITIONAL SPECIFICATIONS.

NOTES:
Trusses Manufactured by:
Mayo Truss Co. Inc.
Analysis Conforms To:
FBC2007
TPI 2002
OH Loading
Soffit psf 2.0
This truss has been designed for 20.0 psf LL on the B.C. in areas where a rectangle
3- 6- 0 tall by
2- 0- 0 wide
will fit between the B.C. and any other member.
Design checked for 10 psf non-concurrent LL on BC.
Wind Loads - ANSI / ASCE 7-05
Truss is designed as Components and Claddings* for Exterior zone location.
Wind Speed: 120 mph
Mean Roof Height: 15-0
Exposure Category: B
Occupancy Factor : 1.00
Building Type: Enclosed
TC Dead Load: 5.0 psf
BC Dead Load: 5.0 psf
User-defined wind-exposed BC regions --From-- ---To---
0- 0- 0 9- 3- 8
40- 8- 9 51- 8- 0
Max comp. force 2204 Lbs
Max tens. force 2505 Lbs
Connector Plate Fabrication Tolerance = 20%
This truss is designed for a creep factor of 1.5 which is used to calculate total load deflection.

Joaquin Velez, FL Lic. #68182
Robbins Engineering
6904 Parke East Blvd
Tampa, FL, 33610
FL Cert.#5555

November 25,2009

Job	Mark	Quan	Type	Span	Pl-Hl	Left OH	Right OH	Engineering
JOHNSON-SPEC	A7	1	SP	510800	3	2- 0- 0	2- 0- 0	T3555294

SPEC LOT15 ROSEWOOD ESTATES

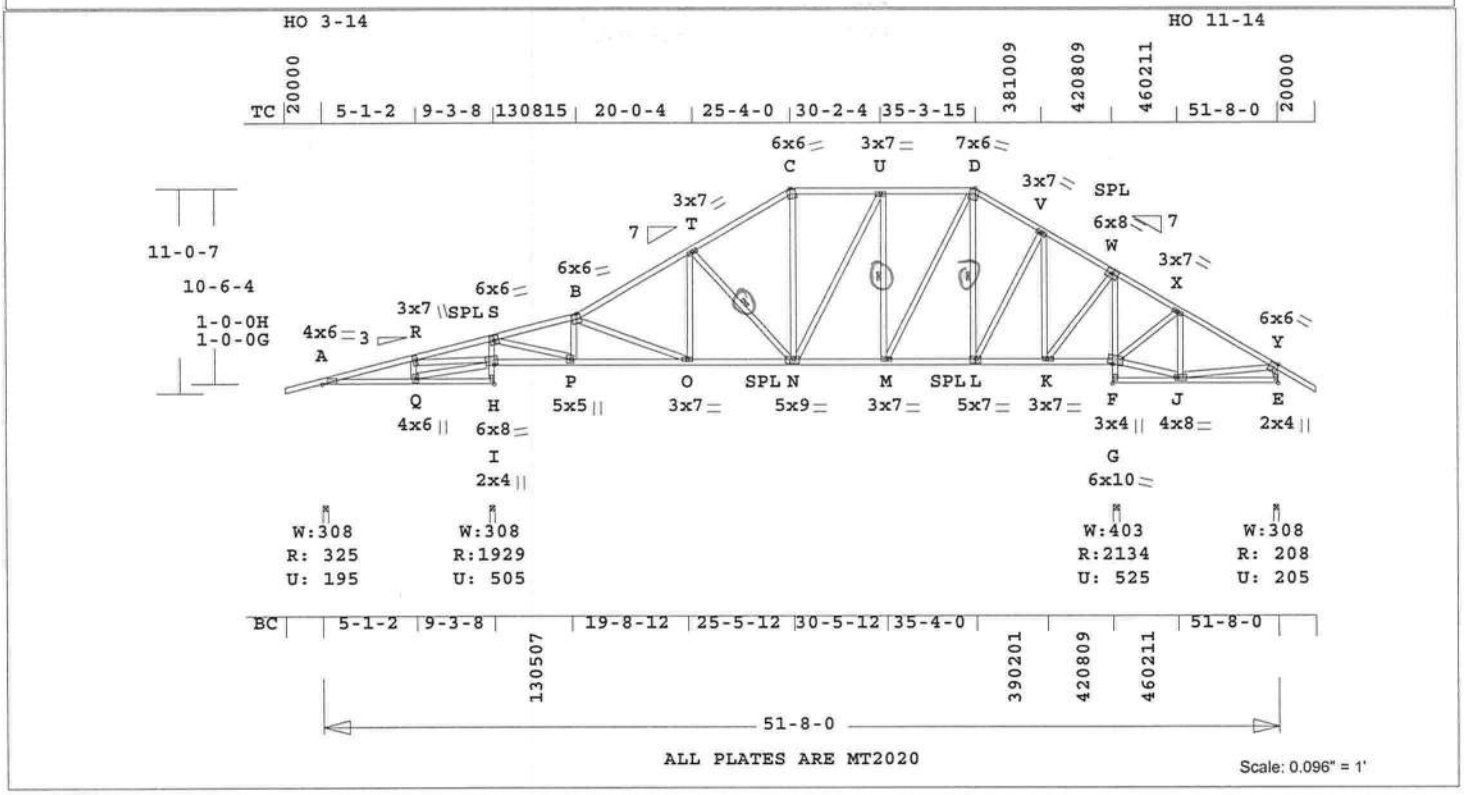

Online Plus -- Version 25.0.012
RUN DATE: 25-NOV-09

	CSI	-Size-	----Lumber----
TC	0.42	2x 4	SP-#2
BC	0.39	2x 4	SP-#2
CW	0.52	2x 4	SP-#2
WB	0.82	2x 4	SP-#2

Brace truss as follows:

	O.C.	From	To
TC	Cont.	0- 0- 0	25- 4- 0
TC	24.0"	25- 4- 0	35- 3-15
TC	Cont.	35- 3-15	51- 8- 0
BC	Cont.	0- 0- 0	51- 8- 0

One Continuous Lateral Brace
T -N M -U L -D
Attach CLB with (2)-10d nails at each web.

psf-Ld	Dead	Live
TC	10.0	20.0
BC	10.0	0.0
TC+BC	20.0	20.0

Total 40.0 Spacing 24.0"
Lumber Duration Factor 1.25
Plate Duration Factor 1.25
TC Fb=1.15 Fc=1.10 Ft=1.10
BC Fb=1.10 Fc=1.10 Ft=1.10

Total Load Reactions (Lbs)

Jt	Down	Uplift	Horiz-
A	325	195 U	232 R
I	1930	505 U	
F	2134	526 U	
E	209	205 U	271 R

Jt	Brg Size	Required
A	3.5"	1.5"
I	3.5"	2.1"
F	4.2"	2.3"
E	3.5"	1.5"

Plus 9 Wind Load Case(s)
Plus 1 UBC LL Load Case(s)
Plus 1 BC LL Load Case(s)
Plus 1 DL Load Case(s)

Robbins Engineering, Inc./Online Plus™

Membr	CSI	P Lbs	Axl-CSI-Bnd
----------Top Chords----------			
A -R	0.24	542 T	0.07 0.17
R -S	0.42	1062 T	0.18 0.24
S -B	0.25	1678 C	0.01 0.24
B -T	0.40	1726 C	0.05 0.35
T -C	0.39	1346 C	0.01 0.38
C -U	0.24	1152 C	0.00 0.24
U -D	0.24	1094 C	0.00 0.24
D -V	0.16	869 C	0.06 0.10
V -W	0.13	468 C	0.03 0.10
W -X	0.33	543 T	0.08 0.25
X -Y	0.29	178 T	0.04 0.25
--------Bottom Chords---------			
A -Q	0.15	529 C	0.00 0.15
Q -I	0.13	103 C	0.00 0.13
H -P	0.20	1023 C	0.00 0.20
P -O	0.39	1655 T	0.27 0.12
O -N	0.37	1504 T	0.25 0.12
N -M	0.35	1094 T	0.18 0.17
M -L	0.29	752 T	0.12 0.17
L -K	0.17	406 T	0.06 0.11
K -G	0.10	478 C	0.00 0.10
F -J	0.15	55 C	0.00 0.15
J -E	0.15	259 T	0.00 0.15
----------Chord-Webs----------			
I -H	0.23	1900 C	0.02 0.21
H -S	0.15	1720 C	0.15 0.00
F -G	0.19	2112 C	0.19 0.00
G -W	0.52	1820 C	0.51 0.01
-------------Webs-------------			
Q -R	0.02	168 T	
Q -H	0.16	584 C	
R -H	0.30	1153 T	
S -P	0.51	2762 T	
P -B	0.08	708 C	
B -O	0.14	213 C	
O -T	0.04	305 T	
T -N	0.14	532 C	1 Br
N -C	0.18	390 T	
N -U	0.10	180 T	
M -U	0.15	432 C	1 Br
M -D	0.47	733 T	
L -D	0.16	460 C	1 Br
L -V	0.14	714 T	
K -V	0.82	1060 C	
K -W	0.26	1419 T	
G -X	0.12	479 T	
G -J	0.04	198 C	
J -X	0.04	251 T	
J -Y	0.08	209 C	
E -Y	0.03	275 T	WindLd

TL Defl -0.22" in P -O L/999
LL Defl -0.09" in P -O L/999
Shear // Grain in B -T 0.23

Plates for each ply each face.
Plate - MT20 20 Ga, Gross Area
Plate - MT2H 20 Ga, Gross Area

APPROX. TRUSS WEIGHT: 452.5 LBS

Jt	Type	Plt Size	X	Y	JSI
A	MT20	4.0x 6.0	Ctr	0.1	0.44
R	MT20	3.0x 7.0	1.0	Ctr	0.59
S	MT20	6.0x 6.0	Ctr	Ctr	0.81
B	MT20	6.0x 6.0	Ctr	Ctr	0.40
T	MT20	3.0x 7.0	Ctr	Ctr	0.33
C	MT20	6.0x 6.0	1.0	-3.7	0.33
U	MT20	3.0x 7.0	Ctr	Ctr	0.32
D	MT20	7.0x 6.0	-1.1	-4.2	0.53
V	MT20	3.0x 7.0	Ctr	Ctr	0.58
W	MT20	6.0x 8.0	Ctr	0.1	0.47
X	MT20	3.0x 7.0	Ctr	Ctr	0.29
Y	MT20	6.0x 6.0	Ctr	Ctr	0.14
Q	MT20	4.0x 6.0	1.2	0.1	0.27
I	MT20	2.0x 4.0	Ctr	Ctr	0.97
H	MT20	6.0x 8.0	Ctr	1.9	0.52
P	MT20	5.0x 5.0	-2.2	0.3	0.95
O	MT20	3.0x 7.0	Ctr	Ctr	0.23
N	MT20	5.0x 9.0	1.5	-0.5	0.43
M	MT20	3.0x 7.0	Ctr	Ctr	0.50
L	MT20	5.0x 7.0	Ctr	-0.5	0.43
K	MT20	3.0x 7.0	0.5	Ctr	0.82
G	MT20	6.0x10.0	0.2	0.9	0.36
F	MT20	3.0x 4.0	Ctr	Ctr	0.72
J	MT20	4.0x 8.0	Ctr	Ctr	0.25
E	MT20	2.0x 4.0	Ctr	Ctr	0.31

REVIEWED BY:
Robbins Engineering, Inc.
6904 Parke East Blvd.
Tampa, FL 33610

REFER TO ROBBINS ENG. GENERAL NOTES AND SYMBOLS SHEET FOR ADDITIONAL SPECIFICATIONS.

NOTES:
Trusses Manufactured by:
Mayo Truss Co. Inc.
Analysis Conforms To:
FBC2007
TPI 2002
OH Loading
Soffit psf 2.0
This truss has been designed for 20.0 psf LL on the B.C. in areas where a rectangle
3- 6- 0 tall by
2- 0- 0 wide
will fit between the B.C. and any other member.
Design checked for 10 psf non-concurrent LL on BC.
Wind Loads - ANSI / ASCE 7-05
Truss is designed as Components and Claddings* for Exterior zone location.
Wind Speed: 120 mph
Mean Roof Height: 15-0
Exposure Category: B
Occupancy Factor : 1.00
Building Type: Enclosed
TC Dead Load: 5.0 psf
BC Dead Load: 5.0 psf
User-defined wind-exposed BC regions --From-- ---To---
0- 0- 0 9- 3- 8
42- 8- 9 51- 8- 0
Max comp. force 2112 Lbs
Max tens. force 2762 Lbs
Connector Plate Fabrication Tolerance = 20%
This truss is designed for a creep factor of 1.5 which is used to calculate total load deflection.

Joaquin Velez, FL Lic. #68182
Robbins Engineering
6904 Parke East Blvd
Tampa, FL, 33610
FL Cert.#5555

November 25,2009

Job	Mark	Quan	Type	Span	P1-H1	Left OH	Right OH	Engineering
JOHNSON-SPEC	A8	1	SP	510800	3	2- 0- 0	2- 0- 0	T3555295

SPEC LOT15 ROSEWOOD ESTATES

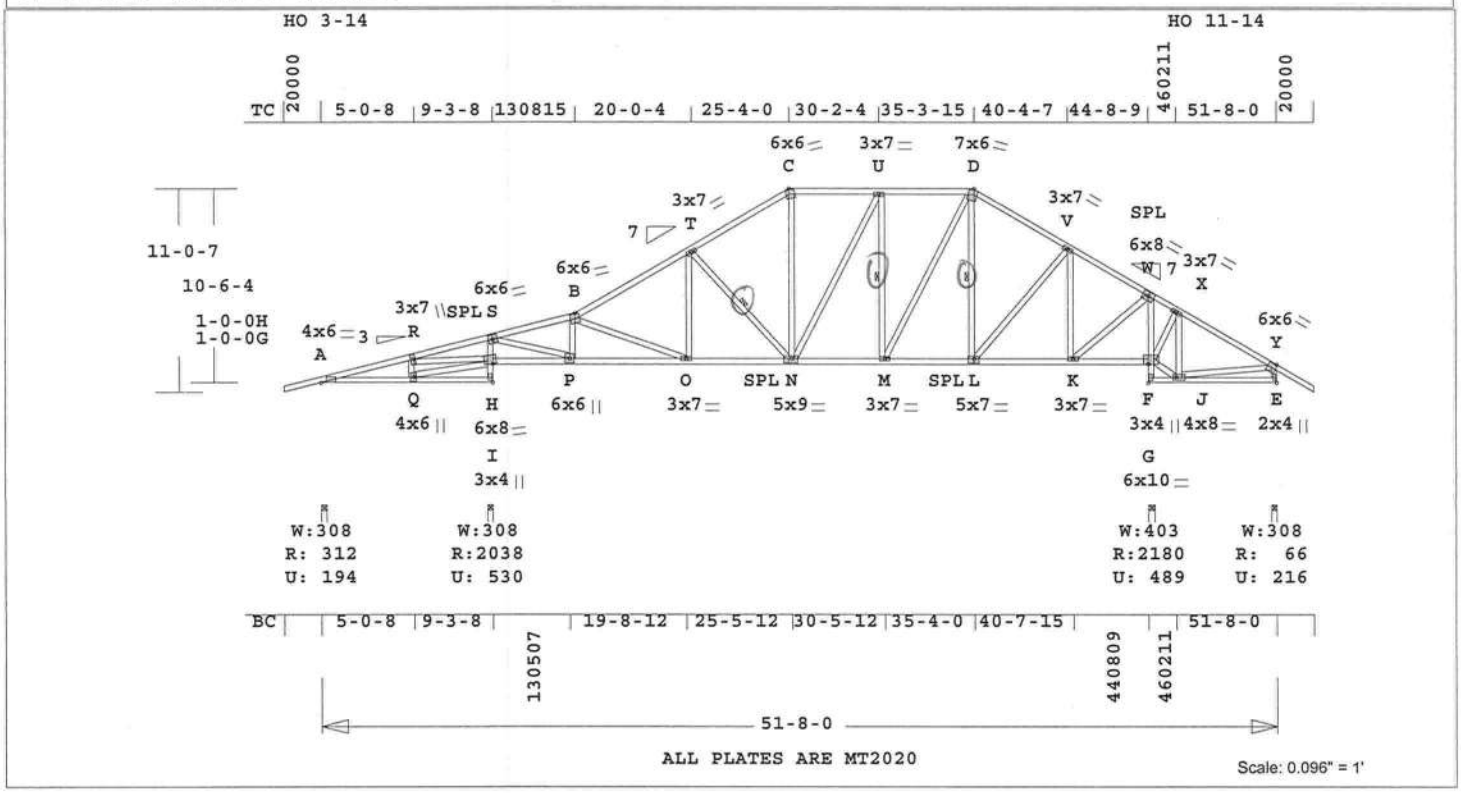

Online Plus -- Version 25.0.012
RUN DATE: 25-NOV-09

	CSI	-Size-	----Lumber----
TC	0.44	2x 4	SP-#2
BC	0.42	2x 4	SP-#2
CW	0.26	2x 4	SP-#2
WB	0.57	2x 4	SP-#2

Brace truss as follows:

	O.C.	From	To
TC	Cont.	0- 0- 0	25- 4- 0
TC	24.0"	25- 4- 0	35- 3-15
TC	Cont.	35- 3-15	51- 8- 0
BC	Cont.	0- 0- 0	51- 8- 0

One Continuous Lateral Brace
T -N M -U L -D
Attach CLB with (2)-10d nails at each web.

psf-Ld	Dead	Live
TC	10.0	20.0
BC	10.0	0.0
TC+BC	20.0	20.0

Total 40.0 Spacing 24.0"
Lumber Duration Factor 1.25
Plate Duration Factor 1.25
TC Fb=1.15 Fc=1.10 Ft=1.10
BC Fb=1.10 Fc=1.10 Ft=1.10

Total Load Reactions (Lbs)

Jt	Down	Uplift	Horiz-
A	313	194 U	232 R
I	2039	530 U	
F	2180	490 U	
E	67	216 U	271 R

Jt	Brg Size	Required
A	3.5"	1.5"
I	3.5"	2.2"
F	4.2"	2.4"
E	3.5"	1.5"

Plus 9 Wind Load Case(s)
Plus 1 UBC LL Load Case(s)
Plus 1 BC LL Load Case(s)
Plus 1 DL Load Case(s)

Robbins Engineering, Inc./Online Plus™

Membr	CSI	P Lbs	Axl-CSI-Bnd
----------Top Chords----------			
A -R	0.23	529 T	0.06 0.17
R -S	0.44	1141 T	0.19 0.25
S -B	0.27	1810 C	0.02 0.25
B -T	0.42	1902 C	0.06 0.36
T -C	0.39	1528 C	0.09 0.30
C -U	0.24	1310 C	0.01 0.23
U -D	0.24	1302 C	0.01 0.23
D -V	0.27	1175 C	0.08 0.19
V -W	0.24	732 C	0.05 0.19
W -X	0.38	654 T	0.10 0.28
X -Y	0.36	399 T	0.08 0.28
--------Bottom Chords---------			
A -Q	0.15	518 C	0.00 0.15
Q -I	0.13	111 C	0.00 0.13
H -P	0.22	1100 C	0.00 0.22
P -O	0.42	1786 T	0.30 0.12
O -N	0.39	1656 T	0.27 0.12
N -M	0.38	1302 T	0.21 0.17
M -L	0.34	1013 T	0.17 0.17
L -K	0.23	640 T	0.10 0.13
K -G	0.12	593 C	0.00 0.12
F -J	0.15	62 C	0.00 0.15
J -E	0.15	259 T	0.00 0.15
----------Chord-Webs----------			
I -H	0.26	2008 C	0.03 0.23
H -S	0.16	1835 C	0.16 0.00
F -G	0.20	2194 C	0.20 0.00
G -W	0.19	1847 C	0.19 0.00
----------Webs----------			
Q -R	0.02	174 T	
Q -H	0.16	576 C	
R -H	0.32	1173 T	
S -P	0.54	2976 T	
P -B	0.09	771 C	
B -O	0.13	199 C	
O -T	0.04	300 T	
T -N	0.14	527 C	1 Br
N -C	0.23	480 T	
N -U	0.12	131 T	
M -U	0.11	334 C	1 Br
M -D	0.38	619 T	
L -D	0.08	250 C	1 Br
L -V	0.10	567 T	
K -V	0.57	956 C	
K -W	0.29	1611 T	
G -X	0.08	542 C	
G -J	0.03	328 C	
J -X	0.06	370 T	
J -Y	0.13	337 C	
E -Y	0.02	200 T	WindLd

TL Defl -0.24" in P -O L/999
LL Defl -0.10" in P -O L/999
Shear // Grain in B -T 0.23

Plates for each ply each face.
Plate - MT20 20 Ga, Gross Area
Plate - MT2H 20 Ga, Gross Area

Jt	Type	Plt Size X	Y	JSI
A	MT20	4.0x 6.0	Ctr 0.1	0.44
R	MT20	3.0x 7.0	1.0 Ctr	0.60
S	MT20	6.0x 6.0	Ctr Ctr	0.87
B	MT20	6.0x 6.0	Ctr Ctr	0.40
T	MT20	3.0x 7.0	Ctr Ctr	0.33
C	MT20	6.0x 6.0	1.0-3.7	0.33
U	MT20	3.0x 7.0	Ctr Ctr	0.32
D	MT20	7.0x 6.0	-1.1-4.2	0.53
V	MT20	3.0x 7.0	Ctr Ctr	0.41
W	MT20	6.0x 8.0	Ctr 0.1	0.48
X	MT20	3.0x 7.0	Ctr Ctr	0.38
Y	MT20	6.0x 6.0	Ctr Ctr	0.14
Q	MT20	4.0x 6.0	1.2 0.1	0.27
I	MT20	3.0x 4.0	Ctr Ctr	0.69
H	MT20	6.0x 8.0	Ctr 1.9	0.52
P	MT20	6.0x 6.0	-1.7 0.1	0.91
O	MT20	3.0x 7.0	Ctr Ctr	0.23
N	MT20	5.0x 9.0	1.5-0.5	0.43
M	MT20	3.0x 7.0	Ctr Ctr	0.43
L	MT20	5.0x 7.0	Ctr-0.5	0.39
K	MT20	3.0x 7.0	Ctr Ctr	0.73
G	MT20	6.0x10.0	Ctr 1.3	0.43
F	MT20	3.0x 4.0	Ctr Ctr	0.75
J	MT20	4.0x 8.0	Ctr Ctr	0.23
E	MT20	2.0x 4.0	Ctr Ctr	0.31

REVIEWED BY:
Robbins Engineering, Inc.
6904 Parke East Blvd.
Tampa, FL 33610

REFER TO ROBBINS ENG. GENERAL NOTES AND SYMBOLS SHEET FOR ADDITIONAL SPECIFICATIONS.

NOTES:
Trusses Manufactured by:
Mayo Truss Co. Inc.
Analysis Conforms To:
FBC2007
TPI 2002
OH Loading
Soffit psf 2.0
This truss has been designed for 20.0 psf LL on the B.C. in areas where a rectangle
3- 6- 0 tall by
2- 0- 0 wide
will fit between the B.C. and any other member.
Design checked for 10 psf non-concurrent LL on BC.
Wind Loads - ANSI / ASCE 7-05
Truss is designed as Components and Claddings* for Exterior zone location.
Wind Speed: 120 mph
Mean Roof Height: 15-0
Exposure Category: B
Occupancy Factor : 1.00
Building Type: Enclosed
TC Dead Load: 5.0 psf

APPROX. TRUSS WEIGHT: 442.3 LBS

BC Dead Load: 5.0 psf
User-defined wind-exposed BC regions

--From--	---To---
0- 0- 0	9- 3- 8
44- 8- 9	51- 8- 0

Max comp. force 2194 Lbs
Max tens. force 2976 Lbs
Connector Plate Fabrication Tolerance = 20%
This truss is designed for a creep factor of 1.5 which is used to calculate total load deflection.

Joaquin Velez, FL Lic. #68182
Robbins Engineering
6904 Parke East Blvd
Tampa, FL, 33610
FL Cert.#5555

November 25,2009

Job	Mark	Quan	Type	Span	P1-H1	Left OH	Right OH	Engineering
JOHNSON-SPEC	A9	1	SP	400108	7	0	2- 0- 0	T3555296

SPEC LOT15 ROSEWOOD ESTATES

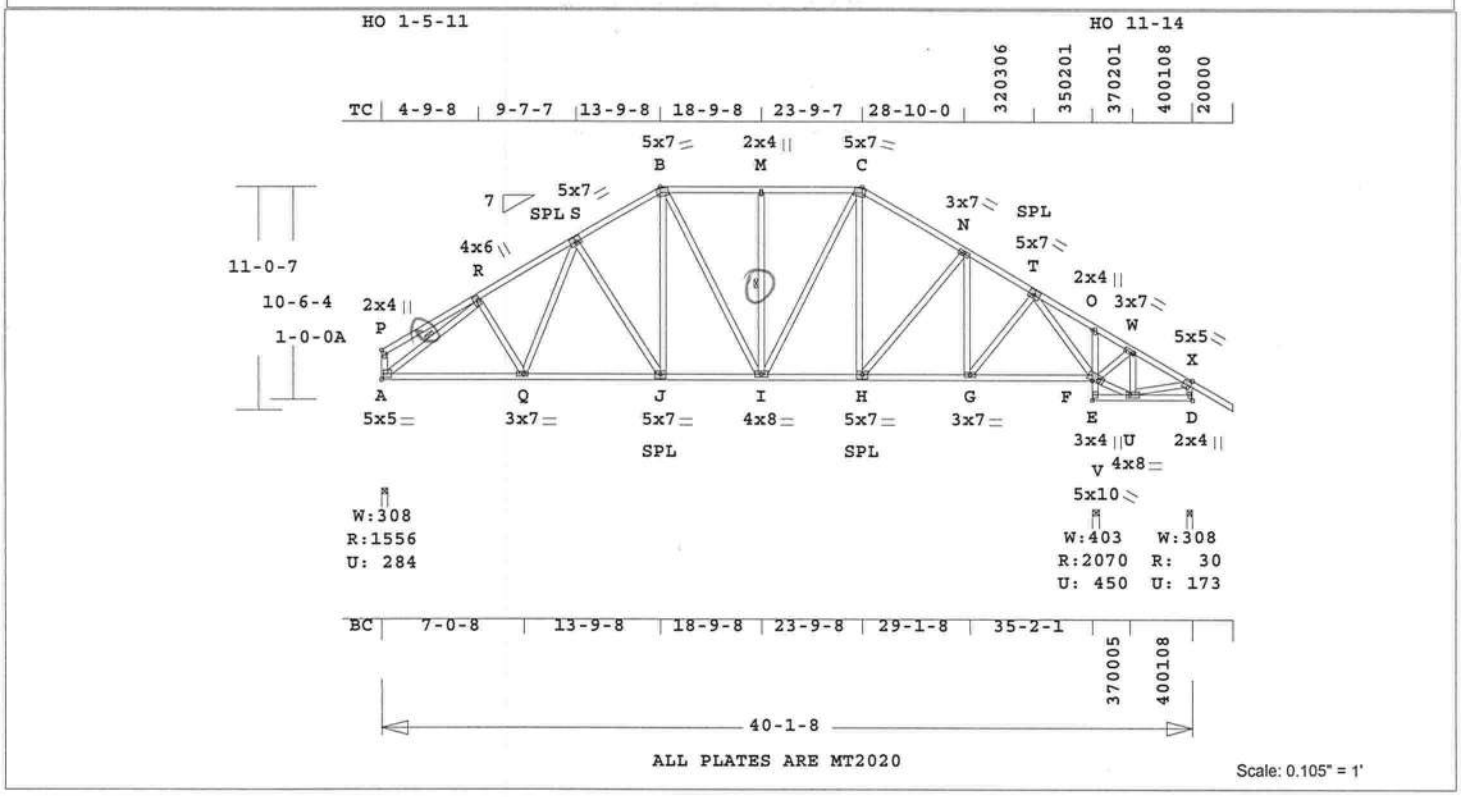

Robbins Engineering, Inc./Online Plus™

Online Plus -- Version 25.0.012
RUN DATE: 25-NOV-09

	CSI	-Size-	----Lumber----
TC	0.29	2x 4	SP-#2
BC	0.53	2x 4	SP-#2
CW	0.19	2x 4	SP-#2
WB	0.85	2x 4	SP-#2

Brace truss as follows:

	O.C.	From	To
TC	Cont.	0- 0- 0	13- 9- 8
TC	24.0"	13- 9- 8	23- 9- 7
TC	Cont.	23- 9- 7	40- 1- 8
BC	Cont.	0- 0- 0	40- 1- 8

One Continuous Lateral Brace
A -R I -M
Attach CLB with (2)-10d nails at each web.

psf-Ld	Dead	Live
TC	10.0	20.0
BC	10.0	0.0
TC+BC	20.0	20.0

Total 40.0 Spacing 24.0"
Lumber Duration Factor 1.25
Plate Duration Factor 1.25
TC Fb=1.15 Fc=1.10 Ft=1.10
BC Fb=1.10 Fc=1.10 Ft=1.10

Total Load Reactions (Lbs)

Jt	Down	Uplift	Horiz-
A	1556	285 U	264 R
E	2070	450 U	
D	31	173 U	256 R

Jt	Brg Size	Required
A	3.5"	1.8"
E	4.2"	2.2"
D	3.5"	1.5"

Plus 9 Wind Load Case(s)
Plus 1 UBC LL Load Case(s)
Plus 1 BC LL Load Case(s)
Plus 1 DL Load Case(s)

Membr	CSI	P Lbs	Axl-CSI-Bnd
----------Top Chords----------			
P -R	0.24	95 T	0.01 0.23
R -S	0.29	1944 C	0.10 0.19
S -B	0.23	1683 C	0.10 0.13
B -M	0.27	1493 C	0.01 0.26
M -C	0.27	1493 C	0.01 0.26
C -N	0.25	1484 C	0.09 0.16
N -T	0.24	1337 C	0.08 0.16
T -O	0.21	567 T	0.08 0.13
O -W	0.23	597 T	0.10 0.13
W -X	0.10	291 T	0.05 0.05
--------Bottom Chords---------			
A -Q	0.53	1627 T	0.27 0.26
Q -J	0.53	1622 T	0.27 0.26
J -I	0.50	1453 T	0.24 0.26
I -H	0.34	1280 T	0.21 0.13
H -G	0.32	1166 T	0.19 0.13
G -V	0.29	719 T	0.12 0.17
E -U	0.04	97 C	0.00 0.04
U -D	0.04	244 T	0.00 0.04
----------Chord-Webs----------			
E -V	0.19	2057 C	0.19 0.00
V -O	0.07	191 C	0.00 0.07
----------Webs----------			
A -P	0.01	146 C	WindLd
A -R	0.34	2136 C	1 Br
R -Q	0.03	149 T	
Q -S	0.04	205 T	
S -J	0.35	366 C	
J -B	0.21	508 T	
B -I	0.15	119 T	
I -M	0.11	335 C	1 Br
I -C	0.27	456 T	
H -C	0.05	136 T	
H -N	0.09	175 T	
G -N	0.28	476 C	
G -T	0.13	731 T	
T -V	0.85	2089 C	
V -W	0.04	321 C	
V -U	0.02	210 C	
U -W	0.04	221 T	
U -X	0.03	258 C	
D -X	0.02	167 T	WindLd

TL Defl -0.20" in Q -J L/999
LL Defl -0.09" in Q -J L/999
Shear // Grain in B -M 0.22

Plates for each ply each face.
Plate - MT20 20 Ga, Gross Area
Plate - MT2H 20 Ga, Gross Area

Jt	Type	Plt Size	X	Y	JSI
P	MT20	2.0x 4.0	Ctr	Ctr	0.28
R	MT20	4.0x 6.0	-0.9	-0.7	0.82
S	MT20	5.0x 7.0	-0.3	0.5	0.45
B	MT20	5.0x 7.0	1.4	-3.3	0.51
M	MT20	2.0x 4.0	Ctr	Ctr	0.31
C	MT20	5.0x 7.0	-1.4	-3.3	0.50
N	MT20	3.0x 7.0	Ctr	Ctr	0.34
T	MT20	5.0x 7.0	0.3	0.5	0.75
O	MT20	2.0x 4.0	Ctr	Ctr	0.28
W	MT20	3.0x 7.0	Ctr	Ctr	0.30
X	MT20	5.0x 5.0	Ctr	Ctr	0.20
A	MT20	5.0x 5.0	Ctr	Ctr	0.66
Q	MT20	3.0x 7.0	-1.0	Ctr	0.35
J	MT20	5.0x 7.0	Ctr	-0.5	0.41
I	MT20	4.0x 8.0	Ctr	Ctr	0.26
H	MT20	5.0x 7.0	Ctr	-0.5	0.39
G	MT20	3.0x 7.0	Ctr	Ctr	0.40
V	MT20	5.0x10.0	0.4	0.8	0.72
E	MT20	3.0x 4.0	Ctr	Ctr	0.70
U	MT20	4.0x 8.0	Ctr	Ctr	0.24
D	MT20	2.0x 4.0	Ctr	Ctr	0.31

APPROX. TRUSS WEIGHT: 370.4 LBS

REVIEWED BY:
Robbins Engineering, Inc.
6904 Parke East Blvd.
Tampa, FL 33610

REFER TO ROBBINS ENG. GENERAL NOTES AND SYMBOLS SHEET FOR ADDITIONAL SPECIFICATIONS.

NOTES:
Trusses Manufactured by:
Mayo Truss Co. Inc.
Analysis Conforms To:
FBC2007
TPI 2002
OH Loading
Soffit psf 2.0
This truss has been designed for 20.0 psf LL on the B.C. in areas where a rectangle
3- 6- 0 tall by
2- 0- 0 wide
will fit between the B.C. and any other member.
Design checked for 10 psf non-concurrent LL on BC.
Wind Loads - ANSI / ASCE 7-05
Truss is designed as Components and Claddings* for Exterior zone location.
Wind Speed: 120 mph
Mean Roof Height: 15-0
Exposure Category: B
Occupancy Factor : 1.00
Building Type: Enclosed
TC Dead Load: 5.0 psf
BC Dead Load: 5.0 psf
User-defined wind-exposed BC regions --From-- ---To---
35- 2- 1 40- 1- 8
Max comp. force 2136 Lbs
Max tens. force 1627 Lbs
Connector Plate Fabrication Tolerance = 20%
This truss is designed for a creep factor of 1.5 which is used to calculate total load deflection.

Joaquin Velez, FL Lic. #68182
Robbins Engineering
6904 Parke East Blvd
Tampa, FL, 33610
FL Cert.#5555

November 25,2009

Job	Mark	Quan	Type	Span	Pl-Hl	Left OH	Right OH	Engineering
JOHNSON-SPEC	A10	1	SP	400108	7	0	0	T3555297

SPEC LOT15 ROSEWOOD ESTATES

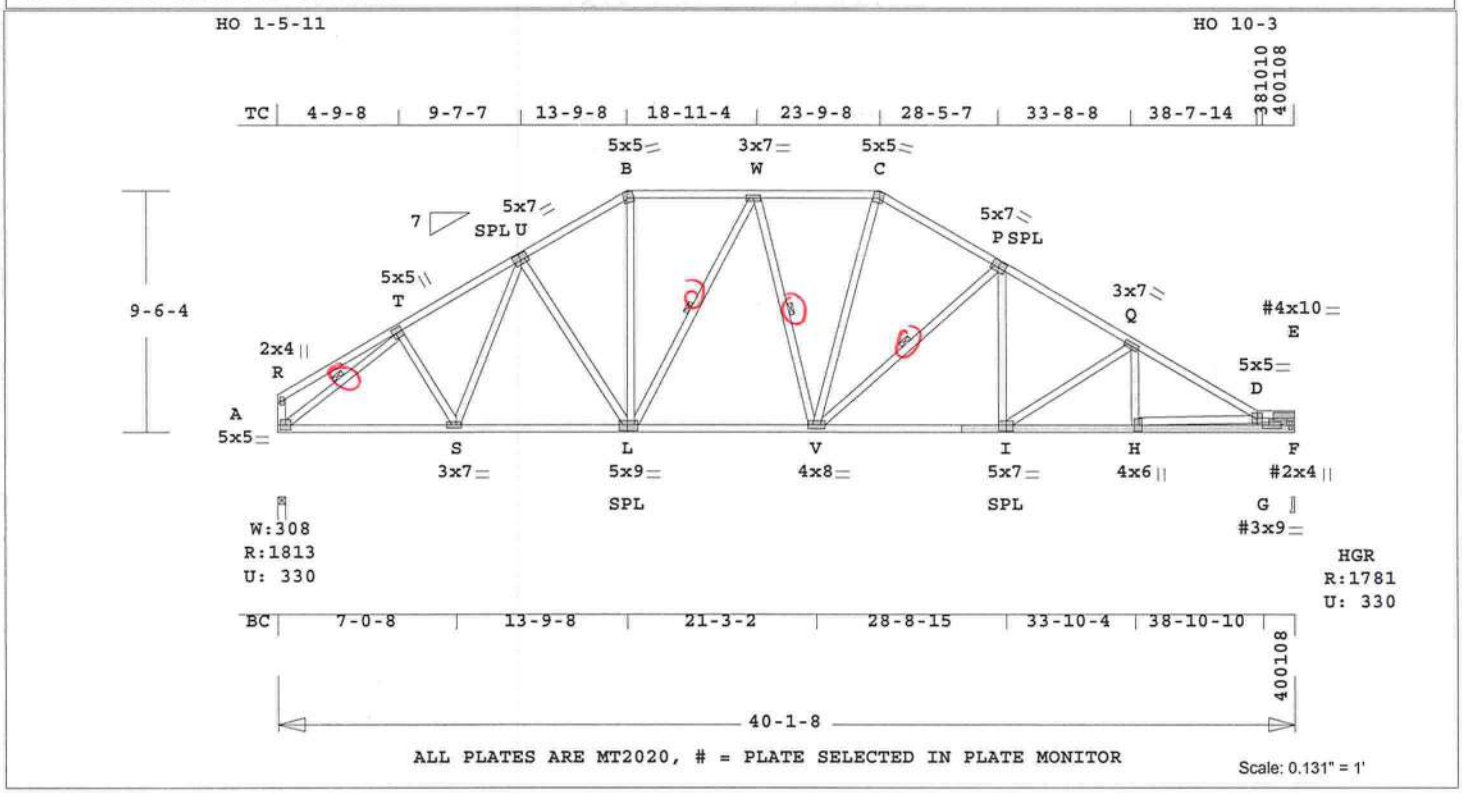

Robbins Engineering, Inc./Online Plus™ APPROX. TRUSS WEIGHT: 362.6 LBS

Online Plus -- Version 25.0.012
RUN DATE: 25-NOV-09

	CSI	-Size-	----Lumber----
TC	0.58	2x 4	SP-#2
BC	0.85	2x 4	SP-#2
WB	0.63	2x 4	SP-#2
--	0.11	2x 6	SP-#2
	G -D		
SCAB (1)		2x 4	SP-#2

Brace truss as follows:

	O.C.	From	To
TC	Cont.	0- 0- 0	13- 9- 8
TC	24.0"	13- 9- 8	23- 9- 8
TC	Cont.	23- 9- 8	40- 1- 8
BC	Cont.	0- 0- 0	40- 1- 8

One Continuous Lateral Brace
A -T L -W W -V V -P
Attach CLB with (2)-10d nails at each web.

psf-Ld	Dead	Live
TC	10.0	20.0
BC	10.0	0.0
TC+BC	20.0	20.0
Total	40.0	Spacing 24.0"

Lumber Duration Factor 1.25
Plate Duration Factor 1.25
TC Fb=1.15 Fc=1.10 Ft=1.10
BC Fb=1.10 Fc=1.10 Ft=1.10

Total Load Reactions (Lbs)

Jt	Down	Uplift	Horiz-
A	1813	331 U	252 R
F	1781	331 U	236 R

Jt	Brg Size	Required
A	3.5"	2.1"
F	3.5"	2.1"

Plus 9 Wind Load Case(s)
Plus 1 UBC LL Load Case(s)
Plus 1 BC LL Load Case(s)
Plus 1 DL Load Case(s)

Membr	CSI	P Lbs	Axl-CSI-Bnd	
----------Top Chords----------				
R -T	0.23	95 T	0.01	0.22
T -U	0.31	2329 C	0.12	0.19
U -B	0.25	2132 C	0.12	0.13
B -W	0.26	1845 C	0.02	0.24
W -C	0.26	2014 C	0.12	0.14
C -P	0.29	2091 C	0.12	0.17
P -Q	0.39	2747 C	0.05	0.34
Q -D	0.58	3295 C	0.12	0.46
D -E	0.20	3055 C	0.14	0.06
--------Bottom Chords---------				
A -S	0.55	1926 T	0.32	0.23
S -L	0.70	1983 T	0.33	0.37
L -V	0.70	2016 T	0.33	0.37
V -I	0.76	2365 T	0.39	0.37
I -H	0.56	2879 T	0.48	0.08
H -G	0.85	3724 T	0.62	0.23
G -F	0.23	228 T	0.00	0.23
----------Webs----------				
A -R	0.01	146 C	WindLd	
A -T	0.41	2528 C		1 Br
T -S	0.03	190 T		
S -U	0.02	152 T		
U -L	0.33	341 C		
L -B	0.38	800 T		
L -W	0.15	361 C		1 Br
W -V	0.03	131 T		1 Br
V -C	0.40	797 T		
V -P	0.27	738 C		1 Br
I -P	0.09	528 T		
I -Q	0.35	608 C		
H -Q	0.04	300 T		
H -D	0.31	847 C		
G -D	0.11	1910 C		
G -E	0.63	3429 T		
F -E	0.14	1538 C	WindLd	

TL Defl -0.46" in V -I L/999
LL Defl -0.21" in V -I L/999
Shear // Grain in Q -D 0.24

Plates for each ply each face.
Plate - MT20 20 Ga, Gross Area
Plate - MT2H 20 Ga, Gross Area

Jt	Type	Plt Size	X	Y	JSI
R	MT20	2.0x 4.0	Ctr	Ctr	0.28
T	MT20	5.0x 5.0	-0.6	-0.3	0.93
U	MT20	5.0x 7.0	-0.3	0.5	0.45
B	MT20	5.0x 5.0	0.8	-3.1	0.47
W	MT20	3.0x 7.0	Ctr	Ctr	0.30
C	MT20	5.0x 5.0	-0.8	-3.1	0.46
P	MT20	5.0x 7.0	0.3	0.5	0.38
Q	MT20	3.0x 7.0	Ctr	Ctr	0.27
D	MT20	5.0x 5.0	Ctr	Ctr	0.83
E	MT20	4.0x10.0	-1.5	0.8	0.96
A	MT20	5.0x 5.0	Ctr	Ctr	0.78
S	MT20	3.0x 7.0	-1.0	Ctr	0.35
L	MT20	5.0x 9.0	0.5	-0.5	0.51
V	MT20	4.0x 8.0	Ctr	Ctr	0.36
I	MT20	5.0x 7.0	Ctr	-0.5	0.56
H	MT20	4.0x 6.0	1.2	Ctr	0.33
G	MT20	3.0x 9.0	1.5	-0.2	0.96
F#	MT20	2.0x 4.0	Ctr	-0.2	0.45

= Plate Monitor used
REVIEWED BY:
Robbins Engineering, Inc.
6904 Parke East Blvd.
Tampa, FL 33610

REFER TO ROBBINS ENG. GENERAL NOTES AND SYMBOLS SHEET FOR ADDITIONAL SPECIFICATIONS.

NOTES:
Trusses Manufactured by:
Mayo Truss Co. Inc.

Analysis Conforms To:
FBC2007
TPI 2002

Fasten each scab (shaded) with 2 rows of 10d nails at 6 In o.c. each row, staggered along entire length.

This truss has been designed for 20.0 psf LL on the B.C. in areas where a rectangle
3- 6- 0 tall by
2- 0- 0 wide
will fit between the B.C. and any other member.
Design checked for 10 psf non-concurrent LL on BC.
NOTE: USER MODIFIED PLATES
This design may have plates selected through a plate monitor.
Wind Loads - ANSI / ASCE 7-05
Truss is designed as Components and Claddings* for Exterior zone location.
Wind Speed: 120 mph
Mean Roof Height: 15-0
Exposure Category: B
Occupancy Factor : 1.00
Building Type: Enclosed
TC Dead Load: 5.0 psf
BC Dead Load: 5.0 psf
Max comp. force 3295 Lbs
Max tens. force 3724 Lbs
Fabrication Tolerance = 20%
This truss is designed for a creep factor of 1.5 which is used to calculate total load deflection.

Joaquin Velez, FL Lic. #68182
Robbins Engineering
6904 Parke East Blvd
Tampa, FL, 33610
FL Cert.#5555

November 25,2009

Job	Mark	Quan	Type	Span	P1-H1	Left OH	Right OH	Engineering
JOHNSON-SPEC	A11	1	SP	400108	7	0	0	T3555298

SPEC LOT15 ROSEWOOD ESTATES

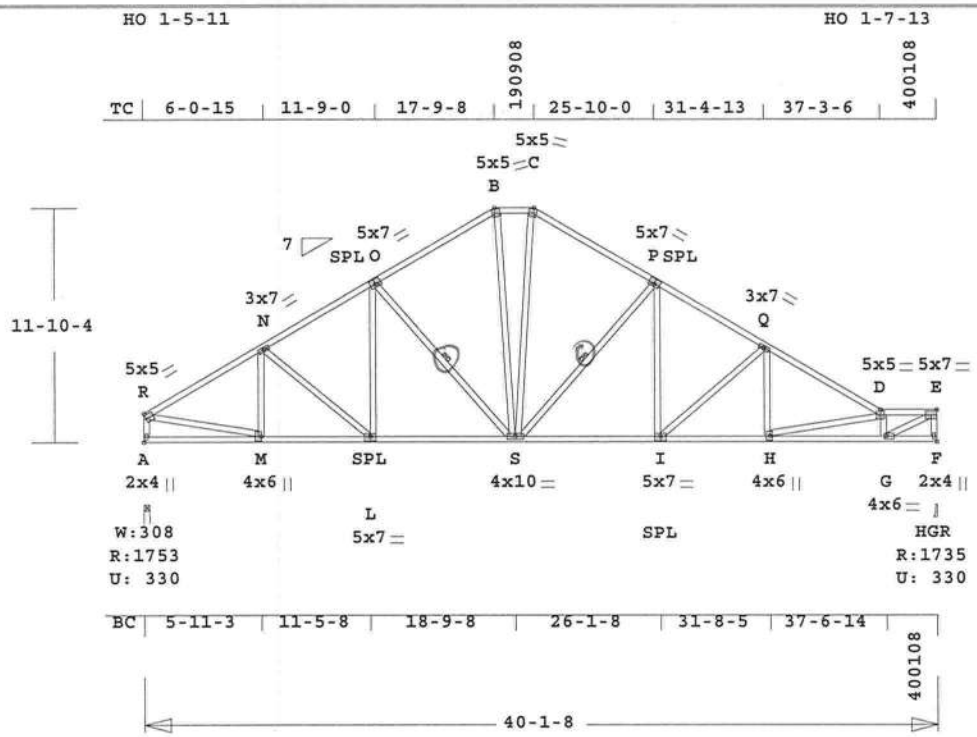

ALL PLATES ARE MT2020

Scale: 0.102" = 1'

Robbins Engineering, Inc./Online Plus™ APPROX. TRUSS WEIGHT: 348.0 LBS

Online Plus -- Version 25.0.012
RUN DATE: 25-NOV-09

	CSI	-Size-	----Lumber----
TC	0.60	2x 4	SP-#2
BC	0.72	2x 4	SP-#2
WB	0.65	2x 4	SP-#2

Brace truss as follows:

	O.C.	From	To
TC	Cont.	0- 0- 0	40- 1- 8
BC	Cont.	0- 0- 0	40- 1- 8

One Continuous Lateral Brace
O -S S -P
Attach CLB with (2)-10d nails at each web.

psf-Ld	Dead	Live
TC	10.0	20.0
BC	10.0	0.0
TC+BC	20.0	20.0

Total 40.0 Spacing 24.0"
Lumber Duration Factor 1.25
Plate Duration Factor 1.25
TC Fb=1.15 Fc=1.10 Ft=1.10
BC Fb=1.10 Fc=1.10 Ft=1.10

Total Load Reactions (Lbs)

Jt	Down	Uplift	Horiz-
A	1753	331 U	309 R
F	1736	331 U	311 R

Jt	Brg Size	Required
A	3.5"	2.1"
F	3.5"	2.0"

Plus 9 Wind Load Case(s)
Plus 1 UBC LL Load Case(s)
Plus 1 BC LL Load Case(s)
Plus 1 DL Load Case(s)

Membr	CSI	P Lbs	Axl-CSI-Bnd
----------Top Chords----------			
R -N	0.44	2229 C	0.07 0.37
N -O	0.38	2191 C	0.11 0.27
O -B	0.37	1758 C	0.11 0.26
B -C	0.20	1561 C	0.11 0.09
C -P	0.37	1757 C	0.11 0.26
P -Q	0.40	2424 C	0.04 0.36
Q -D	0.60	2930 C	0.12 0.48
D -E	0.33	3115 C	0.06 0.27
--------Bottom Chords---------			
A -M	0.18	289 T	0.00 0.18
M -L	0.55	1939 T	0.32 0.23
L -S	0.65	1892 T	0.31 0.34
S -I	0.69	2091 T	0.35 0.34
I -H	0.64	2552 T	0.42 0.22
H -G	0.72	3248 T	0.54 0.18
G -F	0.10	290 T	0.00 0.10
----------Webs----------			
A -R	0.16	1698 C	WindLd
R -M	0.36	1983 T	
M -N	0.10	311 C	
N -L	0.15	192 C	
L -O	0.05	302 T	
O -S	0.25	565 C	1 Br
B -S	0.56	649 T	
S -C	0.56	645 T	
S -P	0.38	860 C	1 Br
I -P	0.16	620 T	
I -Q	0.47	602 C	
H -Q	0.05	350 T	
H -D	0.38	710 C	
G -D	0.15	1621 C	
G -E	0.65	3529 T	
F -E	0.16	1684 C	WindLd

TL Defl -0.43" in S -I L/999
LL Defl -0.20" in S -I L/999
Shear // Grain in Q -D 0.24

Plates for each ply each face.
Plate - MT20 20 Ga, Gross Area
Plate - MT2H 20 Ga, Gross Area

Jt	Type	Plt Size	X	Y	JSI
R	MT20	5.0x 5.0	Ctr	Ctr	0.81
N	MT20	3.0x 7.0	Ctr	Ctr	0.30
O	MT20	5.0x 7.0	-0.3	0.5	0.38
B	MT20	5.0x 5.0	0.8	-3.1	0.39
C	MT20	5.0x 5.0	-0.8	-3.1	0.39
P	MT20	5.0x 7.0	0.3	0.5	0.38
Q	MT20	3.0x 7.0	Ctr	Ctr	0.30
D	MT20	5.0x 5.0	Ctr	Ctr	0.74
E	MT20	5.0x 7.0	Ctr	Ctr	0.92
A	MT20	2.0x 4.0	Ctr	Ctr	0.55
M	MT20	4.0x 6.0	-1.7	0.2	0.83
L	MT20	5.0x 7.0	Ctr	-0.5	0.41
S	MT20	4.0x10.0	Ctr	Ctr	0.53
I	MT20	5.0x 7.0	Ctr	-0.5	0.50
H	MT20	4.0x 6.0	1.2	0.2	0.27
G	MT20	4.0x 6.0	1.5	Ctr	0.94
F	MT20	2.0x 4.0	Ctr	Ctr	0.53

REVIEWED BY:
Robbins Engineering, Inc.
6904 Parke East Blvd.
Tampa, FL 33610

REFER TO ROBBINS ENG. GENERAL NOTES AND SYMBOLS SHEET FOR ADDITIONAL SPECIFICATIONS.

NOTES:
Trusses Manufactured by:
Mayo Truss Co. Inc.
Analysis Conforms To:
FBC2007
TPI 2002

This truss has been designed for 20.0 psf LL on the B.C. in areas where a rectangle
3- 6- 0 tall by
2- 0- 0 wide
will fit between the B.C. and any other member.
Design checked for 10 psf non-concurrent LL on BC.
Wind Loads - ANSI / ASCE 7-05
Truss is designed as Components and Claddings* for Exterior zone location.
Wind Speed: 120 mph
Mean Roof Height: 15-0
Exposure Category: B
Occupancy Factor : 1.00
Building Type: Enclosed
TC Dead Load: 5.0 psf
BC Dead Load: 5.0 psf
Max comp. force 3115 Lbs
Max tens. force 3529 Lbs
Connector Plate Fabrication Tolerance = 20%
This truss is designed for a creep factor of 1.5 which is used to calculate total load deflection.

Joaquin Velez, FL Lic. #68182
Robbins Engineering
6904 Parke East Blvd
Tampa, FL, 33610
FL Cert.#5555

November 25,2009

Job	Mark	Quan	Type	Span	P1-H1	Left OH	Right OH	Engineering
JOHNSON-SPEC	A12	1	SP	400108	7	0	0	T3555299

SPEC LOT15 ROSEWOOD ESTATES

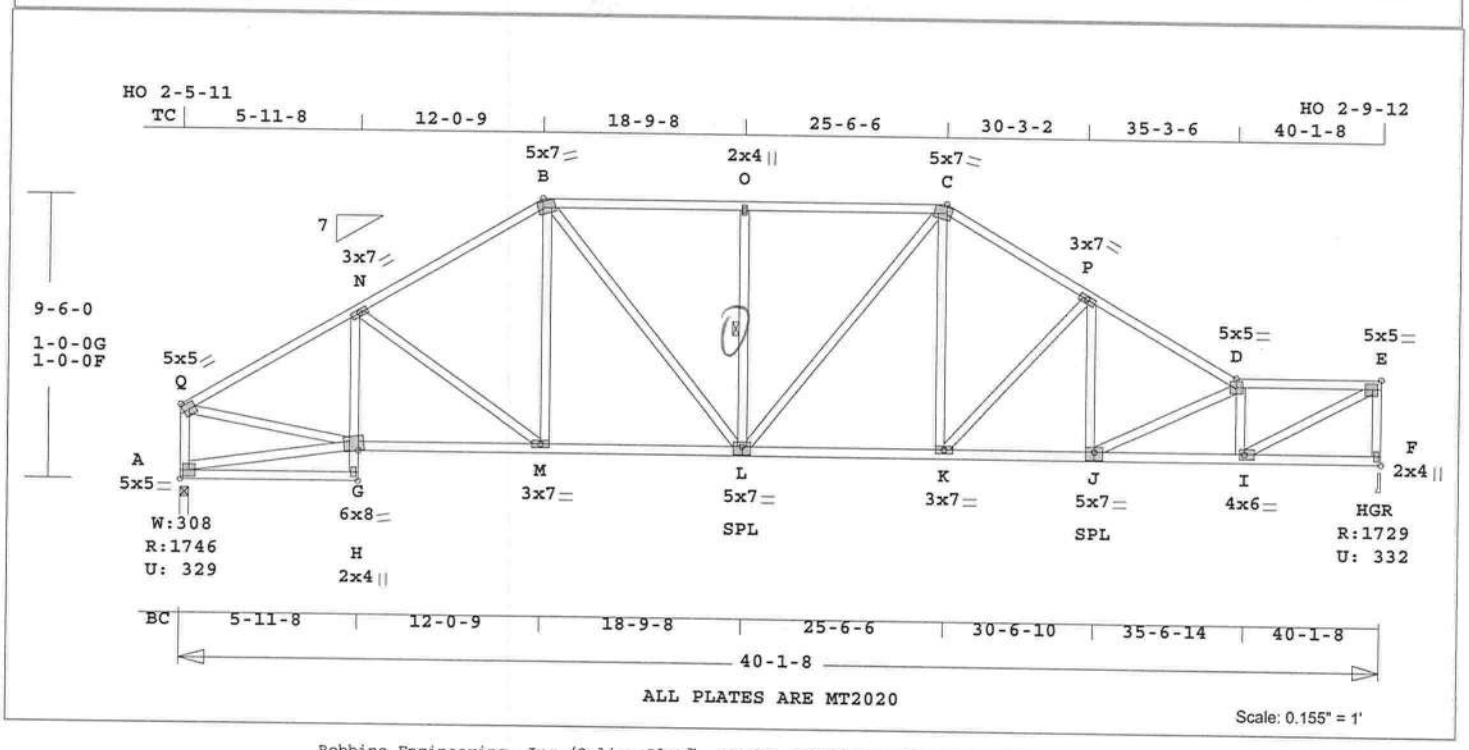

Robbins Engineering, Inc./Online Plus™ APPROX. TRUSS WEIGHT: 340.6 LBS

Online Plus -- Version 25.0.012
RUN DATE: 25-NOV-09

	CSI	-Size-	----Lumber----
TC	0.54	2x 4	SP-#2
BC	0.62	2x 4	SP-#2
CW	0.10	2x 4	SP-#2
WB	0.59	2x 4	SP-#2

Brace truss as follows:

	O.C.	From	To
TC	Cont.	0- 0- 0	12- 0- 9
TC	24.0"	12- 0- 9	25- 6- 6
TC	Cont.	25- 6- 6	40- 1- 8
BC	Cont.	0- 0- 0	40- 1- 8

One Continuous Lateral Brace
L -O
Attach CLB with (2)-10d nails
at each web.

psf-Ld	Dead	Live
TC	10.0	20.0
BC	10.0	0.0
TC+BC	20.0	20.0

Total 40.0 Spacing 24.0"
Lumber Duration Factor 1.25
Plate Duration Factor 1.25
TC Fb=1.15 Fc=1.10 Ft=1.10
BC Fb=1.10 Fc=1.10 Ft=1.10

Total Load Reactions (Lbs)

Jt	Down	Uplift	Horiz-
A	1747	329 U	244 R
F	1730	332 U	247 R

Jt	Brg Size	Required
A	3.5"	2.1"
F	3.5"	2.0"

Plus 9 Wind Load Case(s)
Plus 1 UBC LL Load Case(s)
Plus 1 BC LL Load Case(s)
Plus 1 DL Load Case(s)

Membr	CSI	P Lbs	Axl-CSI-Bnd	
----------Top Chords----------				
Q -N	0.43	2204 C	0.12	0.31
N -B	0.43	2163 C	0.12	0.31
B -O	0.54	2221 C	0.03	0.51
O -C	0.54	2221 C	0.03	0.51
C -P	0.34	2357 C	0.03	0.31
P -D	0.41	2783 C	0.09	0.32
D -E	0.32	2834 C	0.05	0.27
--------Bottom Chords---------				
A -H	0.25	54 C	0.00	0.25
G -M	0.55	1925 T	0.32	0.23
M -L	0.59	1862 T	0.31	0.28
L -K	0.62	2033 T	0.34	0.28
K -J	0.60	2420 T	0.40	0.20
J -I	0.57	2892 T	0.48	0.09
I -F	0.12	208 T	0.00	0.12
----------Chord-Webs----------				
H -G	0.10	113 T	0.01	0.09
G -N	0.07	320 C	0.00	0.07
----------Webs----------				
A -Q	0.19	1685 C	WindLd	
A -G	0.03	214 T		
Q -G	0.36	1965 T		
N -M	0.25	276 C		
M -B	0.05	312 T		
B -L	0.38	571 T		
L -O	0.12	461 C	1 Br	
L -C	0.21	299 T		
K -C	0.20	626 T		
K -P	0.44	553 C		
J -P	0.05	364 T		
J -D	0.24	523 C		
I -D	0.18	1479 C		
I -E	0.59	3240 T		
F -E	0.21	1681 C	WindLd	

TL Defl -0.42" in L -K L/999
LL Defl -0.19" in L -K L/999
Shear // Grain in O -C 0.30

Plates for each ply each face.
Plate - MT20 20 Ga, Gross Area
Plate - MT2H 20 Ga, Gross Area

Jt	Type	Plt Size	X	Y	JSI
Q	MT20	5.0x 5.0	Ctr	Ctr	0.80
N	MT20	3.0x 7.0	Ctr	Ctr	0.28
B	MT20	5.0x 7.0	1.4	-3.3	0.49
O	MT20	2.0x 4.0	Ctr	Ctr	0.31
C	MT20	5.0x 7.0	-1.4	-3.3	0.48
P	MT20	3.0x 7.0	Ctr	Ctr	0.33
D	MT20	5.0x 5.0	Ctr	Ctr	0.70
E	MT20	5.0x 5.0	-0.4	-0.2	0.99
A	MT20	5.0x 5.0	Ctr	Ctr	0.35
H	MT20	2.0x 4.0	Ctr	Ctr	0.58
G	MT20	6.0x 8.0	Ctr	1.0	0.84
M	MT20	3.0x 7.0	Ctr	Ctr	0.23
L	MT20	5.0x 7.0	Ctr	-0.5	0.48
K	MT20	3.0x 7.0	Ctr	Ctr	0.31
J	MT20	5.0x 7.0	Ctr	-0.5	0.57
I	MT20	4.0x 6.0	1.0	Ctr	0.89
F	MT20	2.0x 4.0	Ctr	Ctr	0.58

REVIEWED BY:
Robbins Engineering, Inc.
6904 Parke East Blvd.
Tampa, FL 33610

REFER TO ROBBINS ENG. GENERAL NOTES AND SYMBOLS SHEET FOR ADDITIONAL SPECIFICATIONS.

NOTES:
Trusses Manufactured by:
Mayo Truss Co. Inc.
Analysis Conforms To:
FBC2007
TPI 2002
This truss has been designed for 20.0 psf LL on the B.C.
in areas where a rectangle
3- 6- 0 tall by
2- 0- 0 wide
will fit between the B.C.
and any other member.
Design checked for 10 psf non-concurrent LL on BC.
Wind Loads - ANSI / ASCE 7-05
Truss is designed as
Components and Claddings*
for Exterior zone location.
Wind Speed: 120 mph
Mean Roof Height: 15-0
Exposure Category: B
Occupancy Factor : 1.00
Building Type: Enclosed
TC Dead Load: 5.0 psf
BC Dead Load: 5.0 psf
Max comp. force 2834 Lbs
Max tens. force 3240 Lbs
Connector Plate Fabrication Tolerance = 20%
This truss is designed for a creep factor of 1.5 which is used to calculate total load deflection.

Joaquin Velez, FL Lic. #68182
Robbins Engineering
6904 Parke East Blvd
Tampa, FL, 33610
FL Cert.#5555

November 25,2009

Job	Mark	Quan	Type	Span	P1-H1	Left OH	Right OH	Engineering
JOHNSON-SPEC	A13	1	SP	400108	7	0	0	T3555300

SPEC LOT15 ROSEWOOD ESTATES

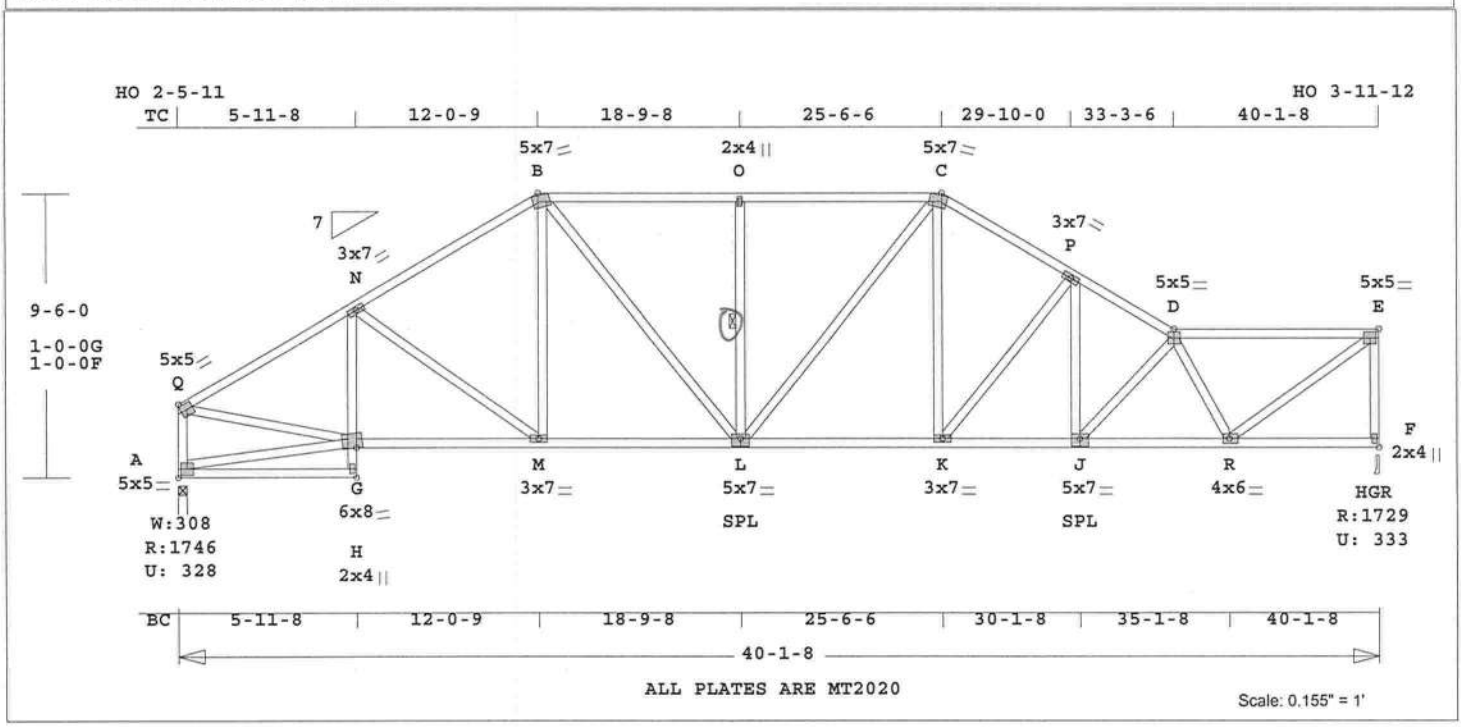

Robbins Engineering, Inc./Online Plus™ APPROX. TRUSS WEIGHT: 346.3 LBS

Online Plus -- Version 25.0.012
RUN DATE: 25-NOV-09

	CSI	-Size-	----Lumber----
TC	0.65	2x 4	SP-#2
BC	0.62	2x 4	SP-#2
CW	0.10	2x 4	SP-#2
WB	0.53	2x 4	SP-#2

Brace truss as follows:

	O.C.	From	To
TC	Cont.	0- 0- 0	12- 0- 9
TC	24.0"	12- 0- 9	25- 6- 6
TC	Cont.	25- 6- 6	40- 1- 8
BC	Cont.	0- 0- 0	40- 1- 8

One Continuous Lateral Brace
L -O
Attach CLB with (2)-10d nails
at each web.

psf-Ld	Dead	Live
TC	10.0	20.0
BC	10.0	0.0
TC+BC	20.0	20.0

Total 40.0 Spacing 24.0"
Lumber Duration Factor 1.25
Plate Duration Factor 1.25
TC Fb=1.15 Fc=1.10 Ft=1.10
BC Fb=1.10 Fc=1.10 Ft=1.10

Total Load Reactions (Lbs)

Jt	Down	Uplift	Horiz-
A	1747	328 U	236 R
F	1730	333 U	267 R

Jt	Brg Size	Required
A	3.5"	2.1"
F	3.5"	2.0"

Plus 9 Wind Load Case(s)
Plus 1 UBC LL Load Case(s)
Plus 1 BC LL Load Case(s)
Plus 1 DL Load Case(s)

Membr	CSI	P Lbs	Axl-CSI-Bnd
----------Top Chords----------			
Q -N	0.43	2204 C	0.12 0.31
N -B	0.43	2163 C	0.12 0.31
B -O	0.53	2221 C	0.03 0.50
O -C	0.53	2221 C	0.03 0.50
C -P	0.35	2344 C	0.03 0.32
P -D	0.28	2750 C	0.05 0.23
D -E	0.65	1985 C	0.05 0.60
--------Bottom Chords---------			
A -H	0.25	55 C	0.00 0.25
G -M	0.55	1925 T	0.32 0.23
M -L	0.59	1862 T	0.31 0.28
L -K	0.62	2035 T	0.34 0.28
K -J	0.59	2359 T	0.39 0.20
J -R	0.53	2700 T	0.45 0.08
R -F	0.14	209 T	0.00 0.14
----------Chord-Webs----------			
H -G	0.10	113 T	0.01 0.09
G -N	0.07	320 C	0.00 0.07
----------Webs----------			
A -Q	0.19	1685 C	WindLd
A -G	0.02	206 T	
Q -G	0.36	1965 T	
N -M	0.25	279 C	
M -B	0.05	312 T	
B -L	0.38	570 T	
L -O	0.12	459 C	1 Br
L -C	0.20	296 T	
K -C	0.19	612 T	
K -P	0.39	499 C	
J -P	0.08	423 T	
J -D	0.18	494 C	
D -R	0.41	1553 C	
R -E	0.53	2485 T	
F -E	0.36	1686 C	WindLd

TL Defl -0.38" in L -K L/999
LL Defl -0.18" in L -K L/999
Shear // Grain in O -C 0.30

Plates for each ply each face.
Plate - MT20 20 Ga, Gross Area
Plate - MT2H 20 Ga, Gross Area

Jt	Type	Plt Size	X	Y	JSI
Q	MT20	5.0x 5.0	Ctr	Ctr	0.80
N	MT20	3.0x 7.0	Ctr	Ctr	0.28
B	MT20	5.0x 7.0	1.4	-3.3	0.49
O	MT20	2.0x 4.0	Ctr	Ctr	0.31
C	MT20	5.0x 7.0	-1.4	-3.3	0.48
P	MT20	3.0x 7.0	Ctr	Ctr	0.35
D	MT20	5.0x 5.0	Ctr	Ctr	0.75
E	MT20	5.0x 5.0	Ctr	Ctr	0.91
A	MT20	5.0x 5.0	Ctr	Ctr	0.35
H	MT20	2.0x 4.0	Ctr	Ctr	0.58
G	MT20	6.0x 8.0	Ctr	1.0	0.84
M	MT20	3.0x 7.0	Ctr	Ctr	0.23
L	MT20	5.0x 7.0	Ctr	-0.5	0.48
K	MT20	3.0x 7.0	Ctr	Ctr	0.31
J	MT20	5.0x 7.0	Ctr	-0.5	0.53
R	MT20	4.0x 6.0	0.5	Ctr	0.83
F	MT20	2.0x 4.0	Ctr	Ctr	0.59

REVIEWED BY:
Robbins Engineering, Inc.
6904 Parke East Blvd.
Tampa, FL 33610

REFER TO ROBBINS ENG. GENERAL NOTES AND SYMBOLS SHEET FOR ADDITIONAL SPECIFICATIONS.

NOTES:
Trusses Manufactured by:
Mayo Truss Co. Inc.
Analysis Conforms To:
FBC2007
TPI 2002
This truss has been designed for 20.0 psf LL on the B.C.
in areas where a rectangle
3- 6- 0 tall by
2- 0- 0 wide
will fit between the B.C.
and any other member.
Design checked for 10 psf non-concurrent LL on BC.
Wind Loads - ANSI / ASCE 7-05
Truss is designed as
Components and Claddings*
for Exterior zone location.
Wind Speed: 120 mph
Mean Roof Height: 15-0
Exposure Category: B
Occupancy Factor : 1.00
Building Type: Enclosed
TC Dead Load: 5.0 psf
BC Dead Load: 5.0 psf
Max comp. force 2750 Lbs
Max tens. force 2700 Lbs
Connector Plate Fabrication
Tolerance = 20%
This truss is designed for a creep factor of 1.5 which is used to calculate total load deflection.

Joaquin Velez, FL Lic. #68182
Robbins Engineering
6904 Parke East Blvd
Tampa, FL, 33610
FL Cert.#5555

November 25,2009

Job	Mark	Quan	Type	Span	P1-H1	Left OH	Right OH	Engineering
JOHNSON-SPEC	A14	1	SP	400108	7	0	0	T3555301

SPEC LOT15 ROSEWOOD ESTATES

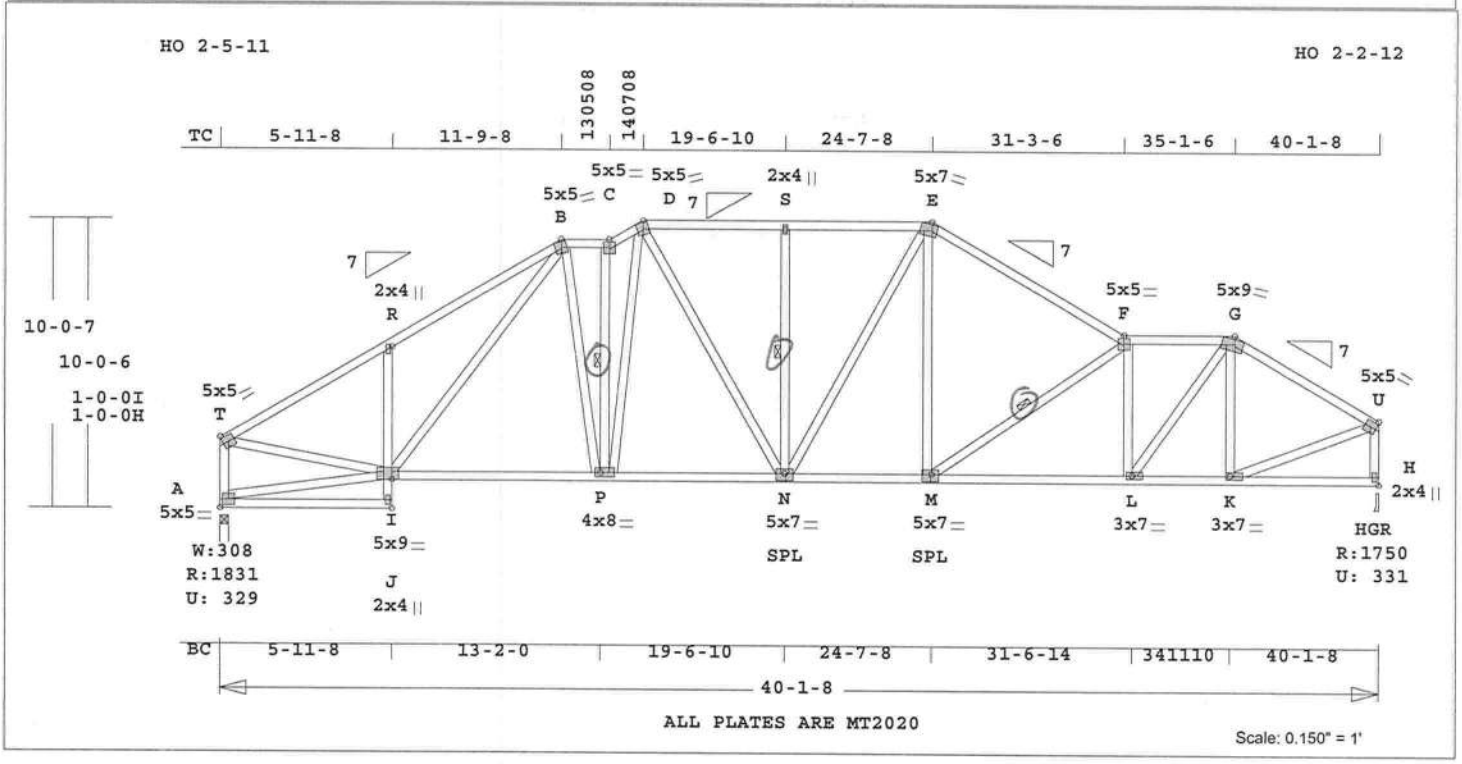

Robbins Engineering, Inc./Online Plus™ APPROX. TRUSS WEIGHT: 382.9 LBS

Online Plus -- Version 25.0.012
RUN DATE: 25-NOV-09

	CSI	-Size-	----Lumber----
TC	0.65	2x 4	SP-#2
BC	0.73	2x 4	SP-#2
CW	0.18	2x 4	SP-#2
WB	0.41	2x 4	SP-#2

Brace truss as follows:

	O.C.	From	To
TC	Cont.	0- 0- 0	14- 7- 8
TC	24.0"	14- 7- 8	24- 7- 8
TC	Cont.	24- 7- 8	40- 1- 8
BC	Cont.	0- 0- 0	40- 1- 8

One Continuous Lateral Brace
P -C N -S M -F
Attach CLB with (2)-10d nails at each web.

psf-Ld	Dead	Live
TC	10.0	20.0
BC	10.0	0.0
TC+BC	20.0	20.0

Total 40.0 Spacing 24.0"
Lumber Duration Factor 1.25
Plate Duration Factor 1.25
TC Fb=1.15 Fc=1.10 Ft=1.10
BC Fb=1.10 Fc=1.10 Ft=1.10

Total Load Reactions (Lbs)

Jt	Down	Uplift	Horiz-
A	1831	330 U	261 R
H	1750	332 U	253 R

Jt	Brg Size	Required
A	3.5"	2.2"
H	3.5"	2.1"

Plus 9 Wind Load Case(s)
Plus 1 UBC LL Load Case(s)
Plus 1 BC LL Load Case(s)
Plus 1 DL Load Case(s)

Membr	CSI	P Lbs	Axl-CSI-Bnd
----------Top Chords----------			
T -R	0.42	2352 C	0.11 0.31
R -B	0.45	2397 C	0.14 0.31
B -C	0.21	2095 C	0.12 0.09
C -D	0.28	2342 C	0.03 0.25
D -S	0.26	2135 C	0.02 0.24
S -E	0.25	2135 C	0.13 0.12
E -F	0.65	2310 C	0.10 0.55
F -G	0.39	2504 C	0.04 0.35
G -U	0.31	1839 C	0.03 0.28
--------Bottom Chords---------			
A -J	0.25	95 C	0.00 0.25
I -P	0.72	1944 T	0.32 0.40
P -N	0.73	2002 T	0.33 0.40
N -M	0.51	2004 T	0.33 0.18
M -L	0.60	2526 T	0.42 0.18
L -K	0.33	1605 T	0.26 0.07
K -H	0.14	222 T	0.00 0.14
----------Chord-Webs----------			
J -I	0.18	113 T	0.01 0.17
I -R	0.14	462 C	0.01 0.13
----------Webs----------			
A -T	0.20	1786 C	WindLd
A -I	0.03	241 T	
T -I	0.38	2096 T	
I -B	0.36	363 T	
B -P	0.20	813 T	
P -C	0.29	1098 C	1 Br
P -D	0.27	642 T	
D -N	0.18	263 T	
N -S	0.09	292 C	1 Br
N -E	0.13	267 T	
M -E	0.18	554 T	
M -F	0.18	625 C	1 Br
L -F	0.41	1131 C	
L -G	0.30	1517 T	
K -G	0.19	538 C	
K -U	0.31	1716 T	
H -U	0.18	1705 C	WindLd

TL Defl -0.36" in M -L L/999
LL Defl -0.16" in N -M L/999
Shear // Grain in E -F 0.25

Plates for each ply each face.
Plate - MT20 20 Ga, Gross Area
Plate - MT2H 20 Ga, Gross Area

Jt	Type	Plt Size	X	Y	JSI
T	MT20	5.0x 5.0	Ctr	Ctr	0.85
R	MT20	2.0x 4.0	Ctr	Ctr	0.28
B	MT20	5.0x 5.0	-0.1	-3.6	0.51
C	MT20	5.0x 5.0	Ctr	Ctr	0.59
D	MT20	5.0x 5.0	-0.1	-3.6	0.57
S	MT20	2.0x 4.0	Ctr	Ctr	0.31
E	MT20	5.0x 7.0	-1.4	-3.3	0.51
F	MT20	5.0x 5.0	Ctr	Ctr	0.58
G	MT20	5.0x 9.0	-1.0	-3.6	0.98
U	MT20	5.0x 5.0	Ctr	Ctr	0.67
A	MT20	5.0x 5.0	Ctr	Ctr	0.38
J	MT20	2.0x 4.0	Ctr	Ctr	0.58
I	MT20	5.0x 9.0	Ctr	0.8	0.96
P	MT20	4.0x 8.0	Ctr	Ctr	0.49
N	MT20	5.0x 7.0	-0.5	-0.5	0.47
M	MT20	5.0x 7.0	Ctr	-0.5	0.49
L	MT20	3.0x 7.0	1.0	Ctr	0.92
K	MT20	3.0x 7.0	Ctr	Ctr	0.71
H	MT20	2.0x 4.0	Ctr	Ctr	0.58

REVIEWED BY:
Robbins Engineering, Inc.
6904 Parke East Blvd.
Tampa, FL 33610

REFER TO ROBBINS ENG. GENERAL NOTES AND SYMBOLS SHEET FOR ADDITIONAL SPECIFICATIONS.

NOTES:
Trusses Manufactured by:
Mayo Truss Co. Inc.
Analysis Conforms To:
FBC2007
TPI 2002
This truss has been designed for 20.0 psf LL on the B.C. in areas where a rectangle
3- 6- 0 tall by
2- 0- 0 wide
will fit between the B.C. and any other member.
Design checked for 10 psf non-concurrent LL on BC.
Wind Loads - ANSI / ASCE 7-05
Truss is designed as Components and Claddings* for Exterior zone location.
Wind Speed: 120 mph
Mean Roof Height: 15-0
Exposure Category: B
Occupancy Factor : 1.00
Building Type: Enclosed
TC Dead Load: 5.0 psf
BC Dead Load: 5.0 psf
Max comp. force 2504 Lbs
Max tens. force 2526 Lbs
Connector Plate Fabrication Tolerance = 20%
This truss is designed for a creep factor of 1.5 which is used to calculate total load deflection.

Joaquin Velez, FL Lic. #68182
Robbins Engineering
6904 Parke East Blvd
Tampa, FL, 33610
FL Cert.#5555

November 25,2009

Job	Mark	Quan	Type	Span	P1-H1	Left OH	Right OH	Engineering
JOHNSON-SPEC	A15	1	SP	400108	7	0	0	T3555302

SPEC LOT15 ROSEWOOD ESTATES

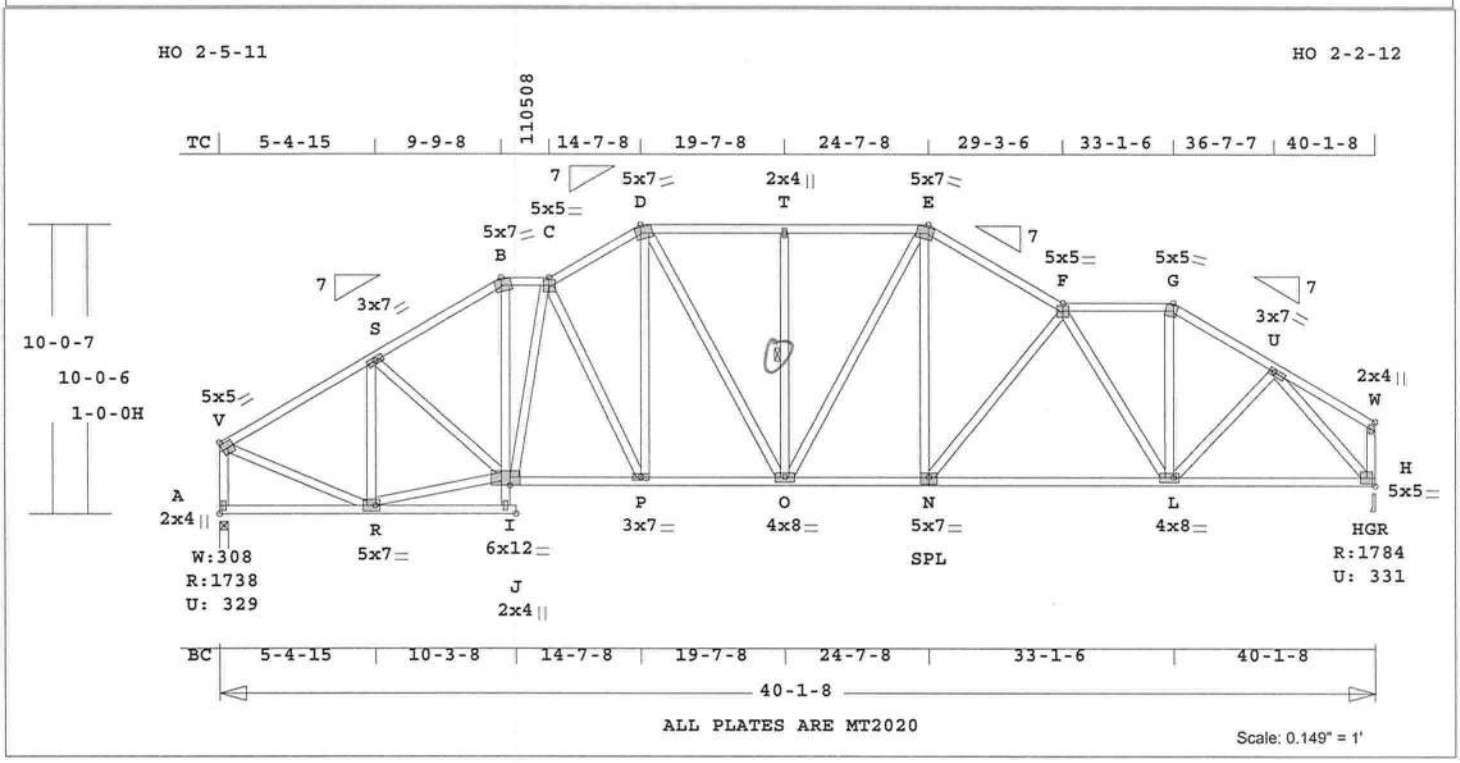

Robbins Engineering, Inc./Online Plus™ APPROX. TRUSS WEIGHT: 387.8 LBS

Online Plus -- Version 25.0.012
RUN DATE: 25-NOV-09

	CSI	-Size-	----Lumber----
TC	0.33	2x 4	SP-#2
BC	0.75	2x 4	SP-#2
CW	0.22	2x 4	SP-#2
WB	0.87	2x 4	SP-#2

Brace truss as follows:

	O.C.	From	To
TC	Cont.	0- 0- 0	14- 7- 8
TC	24.0"	14- 7- 8	24- 7- 8
TC	Cont.	24- 7- 8	40- 1- 8
BC	Cont.	0- 0- 0	40- 1- 8

One Continuous Lateral Brace
O -T
Attach CLB with (2)-10d nails at each web.

psf-Ld	Dead	Live
TC	10.0	20.0
BC	10.0	0.0
TC+BC	20.0	20.0

Total 40.0 Spacing 24.0"
Lumber Duration Factor 1.25
Plate Duration Factor 1.25
TC Fb=1.15 Fc=1.10 Ft=1.10
BC Fb=1.10 Fc=1.10 Ft=1.10

Total Load Reactions (Lbs)

Jt	Down	Uplift	Horiz-
A	1738	330 U	261 R
H	1785	332 U	251 R

Jt	Brg Size	Required
A	3.5"	2.1"
H	3.5"	2.1"

Plus 9 Wind Load Case(s)
Plus 1 UBC LL Load Case(s)
Plus 1 BC LL Load Case(s)
Plus 1 DL Load Case(s)

Membr	CSI	P Lbs	Axl-CSI-Bnd	
----------Top Chords----------				
V -S	0.30	1752 C	0.03	0.27
S -B	0.33	2191 C	0.12	0.21
B -C	0.15	1895 C	0.11	0.04
C -D	0.28	2194 C	0.03	0.25
D -T	0.30	2095 C	0.02	0.28
T -E	0.30	2095 C	0.02	0.28
E -F	0.30	2317 C	0.03	0.27
F -G	0.16	1770 C	0.10	0.06
G -U	0.19	2040 C	0.02	0.17
U -W	0.12	96 T	0.00	0.12
--------Bottom Chords---------				
A -R	0.17	225 T	0.00	0.17
R -J	0.17	46 T	0.00	0.17
I -P	0.49	2088 T	0.35	0.14
P -O	0.46	1919 T	0.32	0.14
O -N	0.68	2006 T	0.33	0.35
N -L	0.75	2379 T	0.39	0.36
L -H	0.58	1392 T	0.23	0.35
----------Chord-Webs----------				
I -B	0.22	936 T	0.17	0.05
J -I	0.09	69 T	0.00	0.09
----------Webs----------				
A -V	0.19	1693 C	WindLd	
V -R	0.30	1665 T		
R -S	0.37	866 C		
R -I	0.27	1512 T		
S -I	0.09	488 T		
I -C	0.68	903 C		
C -P	0.33	379 C		
P -D	0.23	517 T		
D -O	0.20	360 T		
O -T	0.11	351 C		1 Br
O -E	0.16	181 T		
N -E	0.25	724 T		
N -F	0.51	571 C		
F -L	0.86	1135 C		
L -G	0.15	789 T		
L -U	0.10	559 T		
U -H	0.87	2150 C		
H -W	0.01	122 C	WindLd	

TL Defl -0.36" in N -L L/999
LL Defl -0.14" in N -L L/999
Shear // Grain in T -E 0.23

Plates for each ply each face.
Plate - MT20 20 Ga, Gross Area
Plate - MT2H 20 Ga, Gross Area

Jt	Type	Plt Size	X	Y	JSI
V	MT20	5.0x 5.0	Ctr	Ctr	0.64
S	MT20	3.0x 7.0	Ctr	Ctr	0.31
B	MT20	5.0x 7.0	0.9	-3.3	0.34
C	MT20	5.0x 5.0	Ctr	Ctr	0.56
D	MT20	5.0x 7.0	1.4	-3.3	0.51
T	MT20	2.0x 4.0	Ctr	Ctr	0.31
E	MT20	5.0x 7.0	-1.4	-3.3	0.51
F	MT20	5.0x 5.0	Ctr	Ctr	0.62
G	MT20	5.0x 5.0	-0.8	-3.1	0.45
U	MT20	3.0x 7.0	1.2	-0.7	0.67
W	MT20	2.0x 4.0	Ctr	Ctr	0.28
A	MT20	2.0x 4.0	Ctr	Ctr	0.57
R	MT20	5.0x 7.0	Ctr	Ctr	0.92
J	MT20	2.0x 4.0	Ctr	Ctr	0.58
I	MT20	6.0x12.0	Ctr	0.4	0.50
P	MT20	3.0x 7.0	Ctr	Ctr	0.33
O	MT20	4.0x 8.0	Ctr	Ctr	0.26
N	MT20	5.0x 7.0	Ctr	-0.5	0.47
L	MT20	4.0x 8.0	Ctr	Ctr	0.41
H	MT20	5.0x 5.0	Ctr	Ctr	0.61

REVIEWED BY:
Robbins Engineering, Inc.
6904 Parke East Blvd.
Tampa, FL 33610

REFER TO ROBBINS ENG. GENERAL NOTES AND SYMBOLS SHEET FOR ADDITIONAL SPECIFICATIONS.

NOTES:
Trusses Manufactured by:
Mayo Truss Co. Inc.

Analysis Conforms To:
FBC2007
TPI 2002
This truss has been designed for 20.0 psf LL on the B.C. in areas where a rectangle
3- 6- 0 tall by
2- 0- 0 wide
will fit between the B.C. and any other member.
Design checked for 10 psf non-concurrent LL on BC.
Wind Loads - ANSI / ASCE 7-05
Truss is designed as Components and Claddings* for Exterior zone location.
Wind Speed: 120 mph
Mean Roof Height: 15-0
Exposure Category: B
Occupancy Factor : 1.00
Building Type: Enclosed
TC Dead Load: 5.0 psf
BC Dead Load: 5.0 psf
Max comp. force 2317 Lbs
Max tens. force 2379 Lbs
Connector Plate Fabrication Tolerance = 20%
This truss is designed for a creep factor of 1.5 which is used to calculate total load deflection.

Joaquin Velez, FL Lic. #68182
Robbins Engineering
6904 Parke East Blvd
Tampa, FL, 33610
FL Cert.#5555

November 25,2009

Job	Mark	Quan	Type	Span	P1-H1	Left OH	Right OH	Engineering
JOHNSON-SPEC	A16	1	SP	400108	7	0	0	T3555303

SPEC LOT15 ROSEWOOD ESTATES

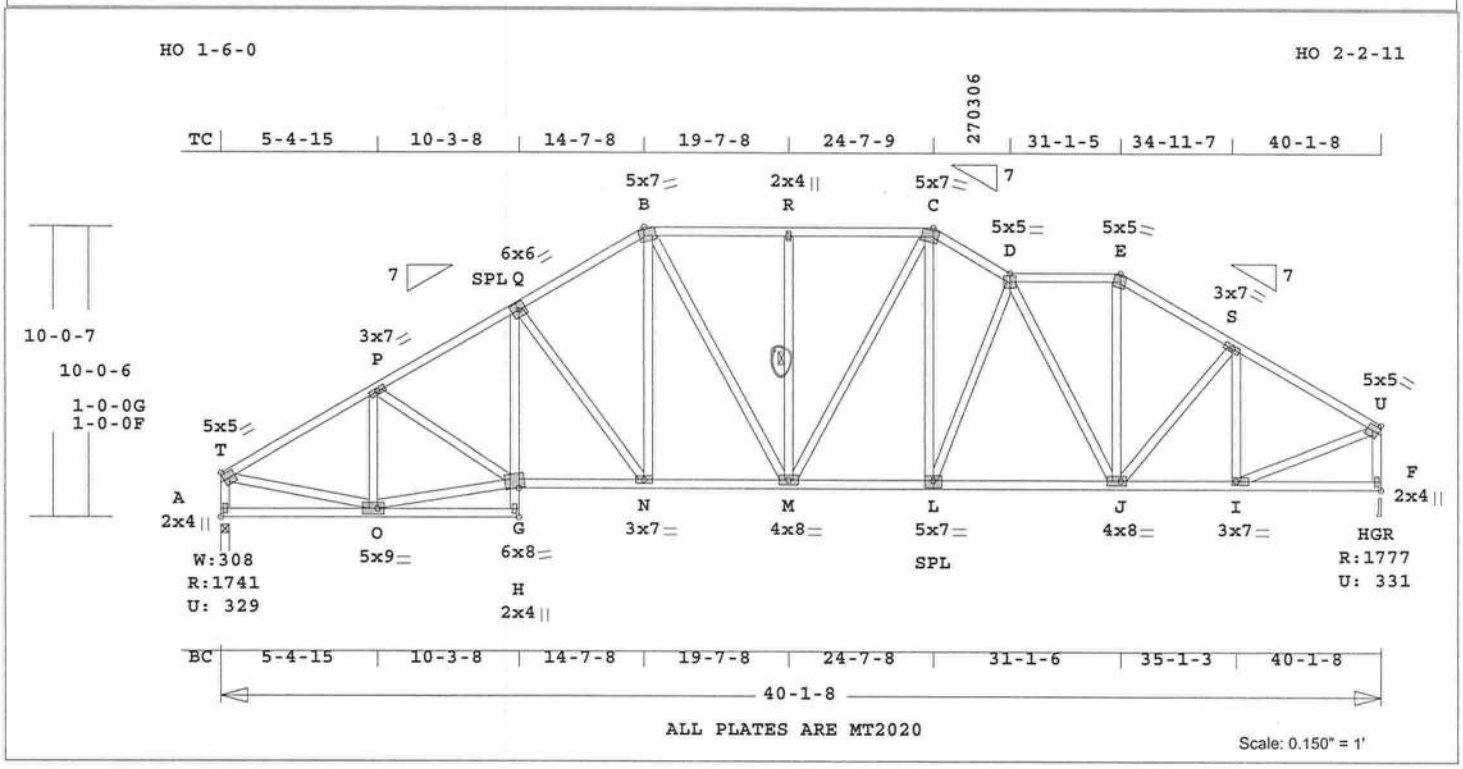

Robbins Engineering, Inc./Online Plus™ APPROX. TRUSS WEIGHT: 383.7 LBS

Online Plus -- Version 25.0.012
RUN DATE: 25-NOV-09

	CSI	-Size-	----Lumber----
TC	0.35	2x 4	SP-#2
BC	0.62	2x 4	SP-#2
CW	0.13	2x 4	SP-#2
WB	0.92	2x 4	SP-#2

Brace truss as follows:

	O.C.	From	To
TC	Cont.	0- 0- 0	14- 7- 8
TC	24.0"	14- 7- 8	24- 7- 9
TC	Cont.	24- 7- 9	40- 1- 8
BC	Cont.	0- 0- 0	40- 1- 8

One Continuous Lateral Brace
M -R
Attach CLB with (2)-10d nails
at each web.

psf-Ld	Dead	Live
TC	10.0	20.0
BC	10.0	0.0
TC+BC	20.0	20.0

Total 40.0 Spacing 24.0"
Lumber Duration Factor 1.25
Plate Duration Factor 1.25
TC Fb=1.15 Fc=1.10 Ft=1.10
BC Fb=1.10 Fc=1.10 Ft=1.10

Total Load Reactions (Lbs)

Jt	Down	Uplift	Horiz-
A	1742	330 U	246 R
F	1778	332 U	260 R

Jt	Brg Size	Required
A	3.5"	2.1"
F	3.5"	2.1"

Plus 9 Wind Load Case(s)
Plus 1 UBC LL Load Case(s)
Plus 1 BC LL Load Case(s)
Plus 1 DL Load Case(s)

Membr	CSI	P Lbs	Axl-CSI-Bnd	
----------Top Chords----------				
T -P	0.33	2162 C	0.11	0.22
P -Q	0.35	2531 C	0.13	0.22
Q -B	0.27	2228 C	0.03	0.24
B -R	0.31	2105 C	0.02	0.29
R -C	0.31	2105 C	0.02	0.29
C -D	0.30	2303 C	0.03	0.27
D -E	0.19	1779 C	0.02	0.17
E -S	0.29	2061 C	0.11	0.18
S -U	0.30	1852 C	0.04	0.26
--------Bottom Chords---------				
A -O	0.17	226 T	0.00	0.17
O -H	0.17	65 T	0.00	0.17
G -N	0.50	2184 T	0.36	0.14
N -M	0.46	1925 T	0.32	0.14
M -L	0.58	2009 T	0.33	0.25
L -J	0.62	2211 T	0.37	0.25
J -I	0.46	1609 T	0.27	0.19
I -F	0.13	229 T	0.00	0.13
----------Chord-Webs----------				
H -G	0.13	74 T	0.00	0.13
G -Q	0.10	297 T	0.04	0.06
----------Webs----------				
A -T	0.16	1696 C	WindLd	
T -O	0.35	1938 T		
O -P	0.20	720 C		
O -G	0.34	1852 T		
P -G	0.06	358 T		
Q -N	0.40	463 C		
N -B	0.22	527 T		
B -M	0.21	369 T		
M -R	0.11	357 C		1 Br
M -C	0.16	197 T		
L -C	0.30	741 T		
L -D	0.46	517 C		
D -J	0.92	922 C		
J -E	0.23	788 T		
J -S	0.04	261 T		
I -S	0.21	584 C		
I -U	0.32	1738 T		
F -U	0.18	1729 C	WindLd	

TL Defl -0.31" in L -J L/999
LL Defl -0.14" in N -M L/999
Shear // Grain in B -R 0.23

Plates for each ply each face.
Plate - MT20 20 Ga, Gross Area
Plate - MT2H 20 Ga, Gross Area

Jt	Type	Plt Size	X	Y	JSI
T	MT20	5.0x 5.0	Ctr	Ctr	0.78
P	MT20	3.0x 7.0	Ctr	Ctr	0.27
Q	MT20	6.0x 6.0	Ctr	0.1	0.45
B	MT20	5.0x 7.0	1.4	-3.3	0.51
R	MT20	2.0x 4.0	Ctr	Ctr	0.31
C	MT20	5.0x 7.0	-1.4	-3.3	0.52
D	MT20	5.0x 5.0	Ctr	Ctr	0.61
E	MT20	5.0x 5.0	-0.4	-3.3	0.39
S	MT20	3.0x 7.0	Ctr	Ctr	0.34
U	MT20	5.0x 5.0	Ctr	Ctr	0.67
A	MT20	2.0x 4.0	Ctr	Ctr	0.56
O	MT20	5.0x 9.0	Ctr	Ctr	0.66
H	MT20	2.0x 4.0	Ctr	Ctr	0.58
G	MT20	6.0x 8.0	Ctr	1.0	0.57
N	MT20	3.0x 7.0	Ctr	Ctr	0.27
M	MT20	4.0x 8.0	Ctr	Ctr	0.26
L	MT20	5.0x 7.0	Ctr	-0.5	0.47
J	MT20	4.0x 8.0	Ctr	Ctr	0.32
I	MT20	3.0x 7.0	Ctr	Ctr	0.72
F	MT20	2.0x 4.0	Ctr	Ctr	0.57

REVIEWED BY:
Robbins Engineering, Inc.
6904 Parke East Blvd.
Tampa, FL 33610

REFER TO ROBBINS ENG. GENERAL NOTES AND SYMBOLS SHEET FOR ADDITIONAL SPECIFICATIONS.

NOTES:
Trusses Manufactured by:
Mayo Truss Co. Inc.

Analysis Conforms To:
FBC2007
TPI 2002
This truss has been designed for 20.0 psf LL on the B.C. in areas where a rectangle
3- 6- 0 tall by
2- 0- 0 wide
will fit between the B.C. and any other member.
Design checked for 10 psf non-concurrent LL on BC.
Wind Loads - ANSI / ASCE 7-05
Truss is designed as Components and Claddings* for Exterior zone location.
Wind Speed: 120 mph
Mean Roof Height: 15-0
Exposure Category: B
Occupancy Factor : 1.00
Building Type: Enclosed
TC Dead Load: 5.0 psf
BC Dead Load: 5.0 psf
Max comp. force 2531 Lbs
Max tens. force 2211 Lbs
Connector Plate Fabrication Tolerance = 20%
This truss is designed for a creep factor of 1.5 which is used to calculate total load deflection.

Joaquin Velez, FL Lic. #68182
Robbins Engineering
6904 Parke East Blvd
Tampa, FL, 33610
FL Cert.#5555

November 25,2009

Job	Mark	Quan	Type	Span	P1-H1	Left OH	Right OH	Engineering
JOHNSON-SPEC	A17	1	SP	400108	7	0	0	T3555304

SPEC LOT15 ROSEWOOD ESTATES

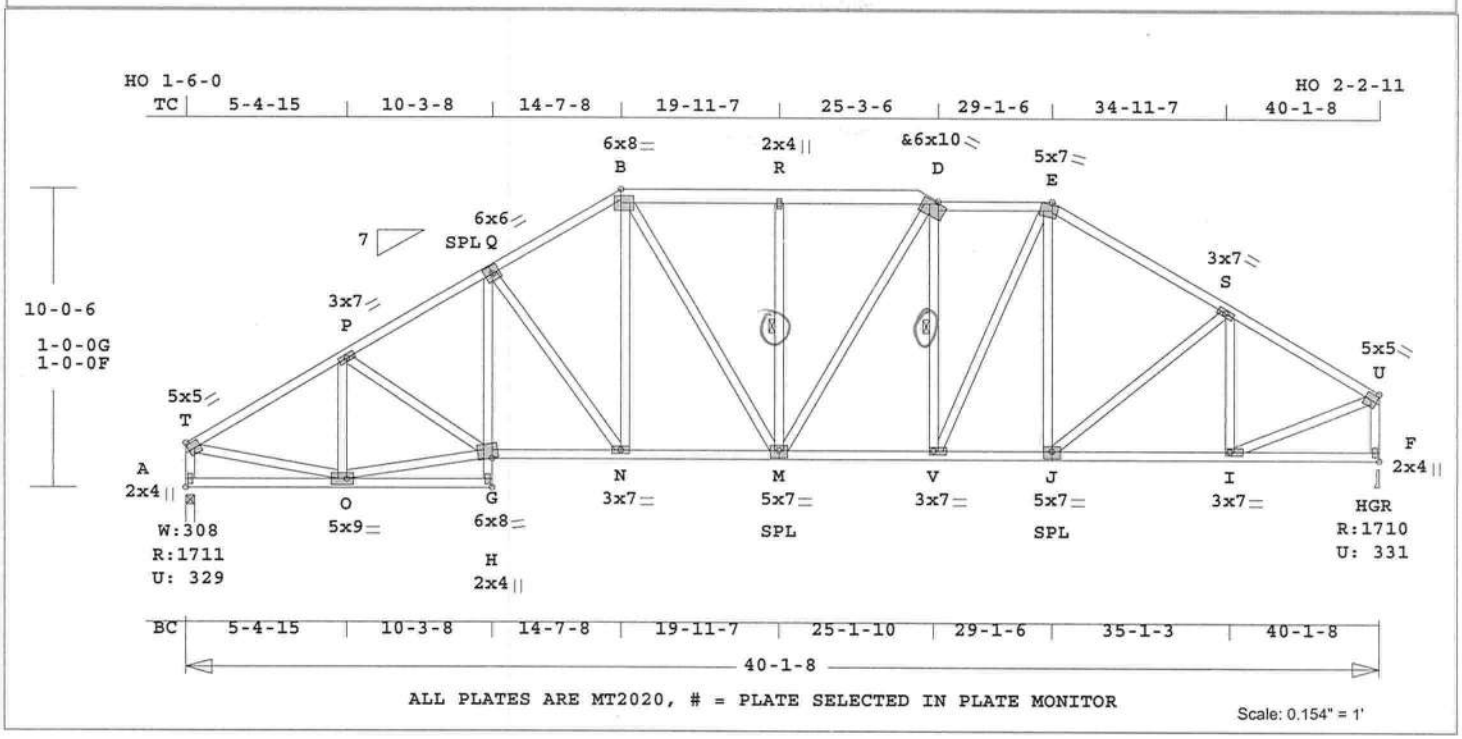

Robbins Engineering, Inc./Online Plus™ APPROX. TRUSS WEIGHT: 385.4 LBS

Online Plus -- Version 25.0.012
RUN DATE: 25-NOV-09

	CSI	-Size-	----Lumber----
TC	0.38	2x 4	SP-#2
--	0.19	2x 6	SP-#2
	B -D		
BC	0.50	2x 4	SP-#2
CW	0.13	2x 4	SP-#2
WB	0.40	2x 4	SP-#2

Brace truss as follows:

	O.C.	From	To
TC	Cont.	0- 0- 0	14- 7- 8
TC	24.0"	14- 7- 8	25- 3- 6
TC	Cont.	25- 3- 6	40- 1- 8
BC	Cont.	0- 0- 0	40- 1- 8

One Continuous Lateral Brace
M -R V -D
Attach CLB with (2)-10d nails at each web.

psf-Ld	Dead	Live
TC	10.0	20.0
BC	10.0	0.0
TC+BC	20.0	20.0

Total 40.0 Spacing 24.0"
Lumber Duration Factor 1.25
Plate Duration Factor 1.25
TC Fb=1.15 Fc=1.10 Ft=1.10
BC Fb=1.10 Fc=1.10 Ft=1.10

Total Load Reactions (Lbs)

Jt	Down	Uplift	Horiz-
A	1712	330 U	241 R
F	1711	332 U	256 R

Jt	Brg Size	Required
A	3.5"	2.0"
F	3.5"	2.0"

Plus 9 Wind Load Case(s)
Plus 1 UBC LL Load Case(s)
Plus 1 BC LL Load Case(s)
Plus 1 DL Load Case(s)

Membr	CSI	P Lbs		Axl-CSI-Bnd	
----------Top Chords----------					
T -P	0.33	2121	C	0.11	0.22
P -Q	0.35	2475	C	0.13	0.22
Q -B	0.31	2170	C	0.02	0.29
B -R	0.19	2064	C	0.02	0.17
R -D	0.18	2064	C	0.09	0.09
D -E	0.19	1946	C	0.12	0.07
E -S	0.38	1939	C	0.11	0.27
S -U	0.37	1791	C	0.10	0.27
--------Bottom Chords---------					
A -O	0.17	221	T	0.00	0.17
O -H	0.17	64	T	0.00	0.17
G -N	0.49	2134	T	0.35	0.14
N -M	0.49	1878	T	0.31	0.18
M -V	0.50	1938	T	0.32	0.18
V -J	0.39	1670	T	0.28	0.11
J -I	0.36	1563	T	0.26	0.10
I -F	0.19	225	T	0.00	0.19
----------Chord-Webs----------					
H -G	0.13	74	T	0.00	0.13
G -Q	0.10	298	T	0.04	0.06
----------Webs----------					
A -T	0.16	1666	C	WindLd	
T -O	0.35	1901	T		
O -P	0.20	704	C		
O -G	0.33	1818	T		
P -G	0.06	341	T		
Q -N	0.40	458	C		
N -B	0.21	524	T		
B -M	0.23	357	T		
M -R	0.10	332	C		1 Br
M -D	0.13	237	T		
V -D	0.13	434	C		1 Br
V -E	0.29	659	T		
J -E	0.02	153	T		
J -S	0.10	136	T		
I -S	0.18	514	C		
I -U	0.31	1688	T		
F -U	0.18	1670	C	WindLd	

TL Defl -0.28" in N -M L/999
LL Defl -0.12" in N -M L/999
Shear // Grain in T -P 0.20

Plates for each ply each face.
Plate - MT20 20 Ga, Gross Area
Plate - MT2H 20 Ga, Gross Area

Jt	Type	Plt Size	X	Y	JSI
T	MT20	5.0x 5.0	Ctr	Ctr	0.77
P	MT20	3.0x 7.0	Ctr	Ctr	0.27
Q	MT20	6.0x 6.0	Ctr	0.1	0.45
B	MT20	6.0x 8.0	-0.5	Ctr	0.61
R	MT20	2.0x 4.0	Ctr	Ctr	0.31
D					2.07
E	MT20	5.0x 7.0	-1.4	-3.3	0.60
S	MT20	3.0x 7.0	Ctr	Ctr	0.29
U	MT20	5.0x 5.0	Ctr	Ctr	0.65
A	MT20	2.0x 4.0	Ctr	Ctr	0.56
O	MT20	5.0x 9.0	Ctr	Ctr	0.65
H	MT20	2.0x 4.0	Ctr	Ctr	0.58
G	MT20	6.0x 8.0	Ctr	1.0	0.56
N	MT20	3.0x 7.0	Ctr	Ctr	0.27
M	MT20	5.0x 7.0	Ctr	-0.5	0.46
V	MT20	3.0x 7.0	Ctr	Ctr	0.48
J	MT20	5.0x 7.0	Ctr	-0.5	0.39
I	MT20	3.0x 7.0	Ctr	Ctr	0.70
F	MT20	2.0x 4.0	Ctr	Ctr	0.57

REVIEWED BY:
Robbins Engineering, Inc.
6904 Parke East Blvd.
Tampa, FL 33610

REFER TO ROBBINS ENG. GENERAL NOTES AND SYMBOLS SHEET FOR ADDITIONAL SPECIFICATIONS.

NOTES:
Trusses Manufactured by:
Mayo Truss Co. Inc.
Analysis Conforms To:
FBC2007
TPI 2002
This truss has been designed for 20.0 psf LL on the B.C. in areas where a rectangle
3- 6- 0 tall by
2- 0- 0 wide
will fit between the B.C. and any other member.
Design checked for 10 psf non-concurrent LL on BC.
Wind Loads - ANSI / ASCE 7-05
Truss is designed as Components and Claddings* for Exterior zone location.
Wind Speed: 120 mph
Mean Roof Height: 15-0
Exposure Category: B
Occupancy Factor : 1.00
Building Type: Enclosed
TC Dead Load: 5.0 psf
BC Dead Load: 5.0 psf
Max comp. force 2475 Lbs
Max tens. force 2134 Lbs
Connector Plate Fabrication Tolerance = 20%
This truss is designed for a creep factor of 1.5 which is used to calculate total load deflection.

Joaquin Velez, FL Lic. #68182
Robbins Engineering
6904 Parke East Blvd
Tampa, FL, 33610
FL Cert.#5555

November 25,2009

Job	Mark	Quan	Type	Span	Pl-Hl	Left OH	Right OH	Engineering
JOHNSON-SPEC	A18	1	SP	431108	7	0	0	T3555305

SPEC LOT15 ROSEWOOD ESTATES

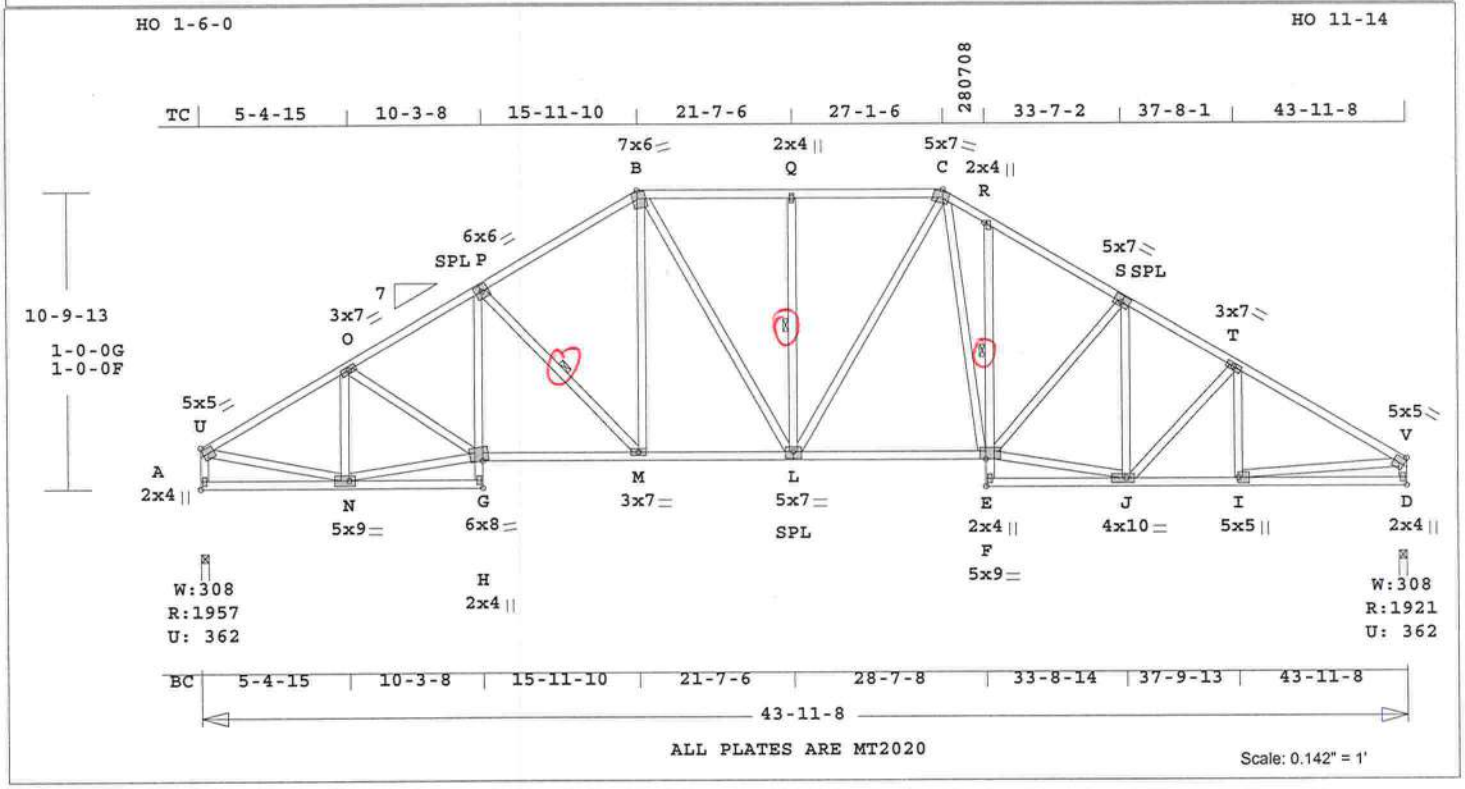

Online Plus -- Version 25.0.012
RUN DATE: 25-NOV-09

	CSI	-Size-	----Lumber----
TC	0.59	2x 4	SP-#2
BC	0.68	2x 4	SP-#2
CW	0.21	2x 4	SP-#2
WB	0.62	2x 4	SP-#2

Brace truss as follows:

	O.C.	From	To
TC	Cont.	0- 0- 0	43-11- 8
BC	Cont.	0- 0- 0	43-11- 8

One Continuous Lateral Brace
P -M L -Q E -R
Attach CLB with (2)-10d nails at each web.

psf-Ld	Dead	Live
TC	10.0	20.0
BC	10.0	0.0
TC+BC	20.0	20.0

Total 40.0 Spacing 24.0"
Lumber Duration Factor 1.25
Plate Duration Factor 1.25
TC Fb=1.15 Fc=1.10 Ft=1.10
BC Fb=1.10 Fc=1.10 Ft=1.10

Total Load Reactions (Lbs)

Jt	Down	Uplift	Horiz-
A	1958	362 U	291 R
D	1922	362 U	279 R

Jt	Brg Size	Required
A	3.5"	2.3"
D	3.5"	2.3"

Plus 9 Wind Load Case(s)
Plus 1 UBC LL Load Case(s)
Plus 1 BC LL Load Case(s)
Plus 1 DL Load Case(s)

Membr	CSI	P Lbs		Axl-CSI-Bnd	
----------Top Chords----------					
U -O	0.36	2461	C	0.07	0.29
O -P	0.35	2954	C	0.15	0.20
P -B	0.36	2507	C	0.04	0.32
B -Q	0.34	2347	C	0.03	0.31
Q -C	0.34	2347	C	0.03	0.31
C -R	0.28	2727	C	0.16	0.12
R -S	0.30	2695	C	0.08	0.22
S -T	0.39	2680	C	0.14	0.25
T -V	0.59	2765	C	0.12	0.47
--------Bottom Chords---------					
A -N	0.17	271	T	0.00	0.17
N -H	0.17	48	C	0.00	0.17
G -M	0.60	2558	T	0.42	0.18

Robbins Engineering, Inc./Online Plus™

M -L	0.68	2164	T	0.36	0.32
L -F	0.68	2175	T	0.36	0.32
E -J	0.14	102	C	0.00	0.14
J -I	0.47	2401	T	0.40	0.07
I -D	0.20	267	T	0.00	0.20
----------Chord-Webs----------					
H -G	0.07	74	T	0.00	0.07
G -P	0.15	329	T	0.05	0.10
E -F	0.21	84	T	0.00	0.21
F -R	0.12	279	C	0.00	0.12
----------Webs----------					
A -U	0.18	1912	C	WindLd	
U -N	0.40	2202	T		
N -O	0.24	848	C		
N -G	0.40	2170	T		
O -G	0.09	495	T		
P -M	0.16	555	C		1 Br
M -B	0.26	610	T		
B -L	0.25	365	T		
L -Q	0.13	361	C		1 Br
L -C	0.20	333	T		
C -F	0.62	926	T		
F -S	0.18	219	C		
F -J	0.45	2457	T		
J -S	0.19	289	C		
J -T	0.12	238	C		
I -T	0.05	196	C		
I -V	0.45	2420	T		
D -V	0.17	1865	C	WindLd	

TL Defl -0.44" in L -F L/999
LL Defl -0.19" in L -F L/999
Shear // Grain in B -Q 0.24

Plates for each ply each face.
Plate - MT20 20 Ga, Gross Area
Plate - MT2H 20 Ga, Gross Area

Jt	Type	Plt Size	X	Y	JSI
U	MT20	5.0x 5.0	Ctr	Ctr	0.89
O	MT20	3.0x 7.0	Ctr	Ctr	0.29
P	MT20	6.0x 6.0	Ctr	0.1	0.45
B	MT20	7.0x 6.0	1.1	-4.2	0.52
Q	MT20	2.0x 4.0	Ctr	Ctr	0.31
C	MT20	5.0x 7.0	-0.9	-3.3	0.69
R	MT20	2.0x 4.0	Ctr	Ctr	0.28
S	MT20	5.0x 7.0	0.3	0.5	0.38
T	MT20	3.0x 7.0	Ctr	Ctr	0.33
V	MT20	5.0x 5.0	Ctr	Ctr	1.00
A	MT20	2.0x 4.0	Ctr	Ctr	0.61
N	MT20	5.0x 9.0	Ctr	Ctr	0.75
H	MT20	2.0x 4.0	Ctr	Ctr	0.58
G	MT20	6.0x 8.0	Ctr	1.0	0.67
M	MT20	3.0x 7.0	Ctr	Ctr	0.31
L	MT20	5.0x 7.0	Ctr	-0.5	0.51
F	MT20	5.0x 9.0	Ctr	0.8	0.60
E	MT20	2.0x 4.0	Ctr	Ctr	0.58
J	MT20	4.0x10.0	-1.5	Ctr	0.80
I	MT20	5.0x 5.0	2.2	0.1	0.84
D	MT20	2.0x 4.0	Ctr	Ctr	0.62

APPROX. TRUSS WEIGHT: 417.7 LBS

REVIEWED BY:
Robbins Engineering, Inc.
6904 Parke East Blvd.
Tampa, FL 33610

REFER TO ROBBINS ENG. GENERAL NOTES AND SYMBOLS SHEET FOR ADDITIONAL SPECIFICATIONS.

NOTES:
Trusses Manufactured by:
Mayo Truss Co. Inc.
Analysis Conforms To:
FBC2007
TPI 2002
This truss has been designed for 20.0 psf LL on the B.C. in areas where a rectangle
3- 6- 0 tall by
2- 0- 0 wide
will fit between the B.C. and any other member.
Design checked for 10 psf non-concurrent LL on BC.
Wind Loads - ANSI / ASCE 7-05
Truss is designed as Components and Claddings* for Exterior zone location.
Wind Speed: 120 mph
Mean Roof Height: 15-0
Exposure Category: B
Occupancy Factor : 1.00
Building Type: Enclosed
TC Dead Load: 5.0 psf
BC Dead Load: 5.0 psf
Max comp. force 2954 Lbs
Max tens. force 2558 Lbs
Connector Plate Fabrication Tolerance = 20%
This truss is designed for a creep factor of 1.5 which is used to calculate total load deflection.

Joaquin Velez, FL Lic. #68182
Robbins Engineering
6904 Parke East Blvd
Tampa, FL, 33610
FL Cert.#5555

November 25,2009

Job	Mark	Quan	Type	Span	P1-H1	Left OH	Right OH	Engineering
JOHNSON-SPEC	A19	1	SP	510800	3	2- 0- 0	2- 0- 0	T3555306

SPEC LOT15 ROSEWOOD ESTATES

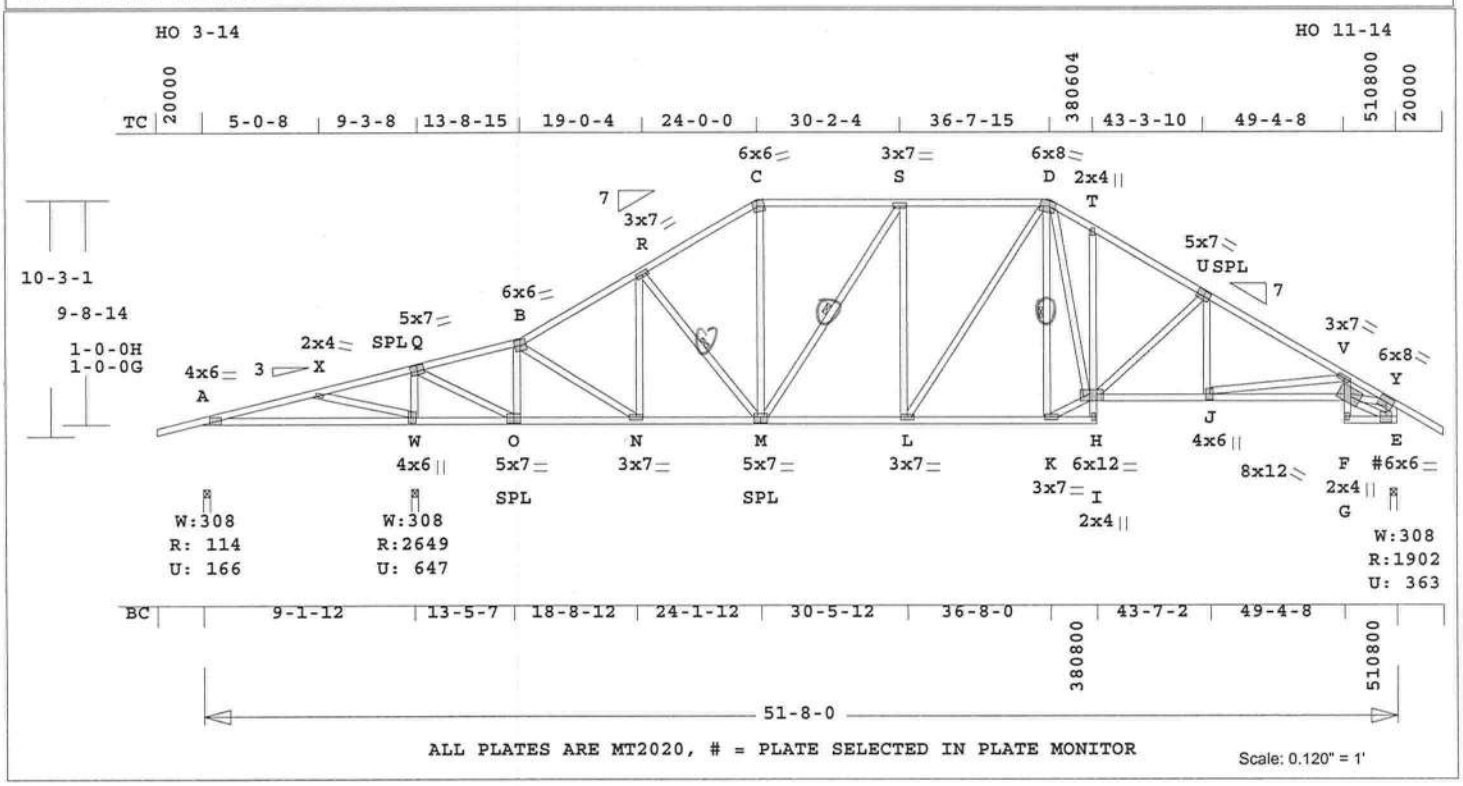

ALL PLATES ARE MT2020, # = PLATE SELECTED IN PLATE MONITOR

Scale: 0.120" = 1'

Online Plus -- Version 25.0.012
RUN DATE: 25-NOV-09

	CSI	-Size-	----Lumber----
TC	0.58	2x 4	SP-#2
BC	0.76	2x 4	SP-#2
CW	0.35	2x 4	SP-#2
WB	0.64	2x 4	SP-#2
--	0.11	2x 6	SP-#2
	E -Y		

Brace truss as follows:

	O.C.	From	To
TC	Cont.	0- 0- 0	51- 8- 0
BC	Cont.	0- 0- 0	51- 8- 0

One Continuous Lateral Brace
R -M M -S K -D
Attach CLB with (2)-10d nails at each web.

psf-Ld	Dead	Live
TC	10.0	20.0
BC	10.0	0.0
TC+BC	20.0	20.0

Total 40.0 Spacing 24.0"
Lumber Duration Factor 1.25
Plate Duration Factor 1.25
TC Fb=1.15 Fc=1.10 Ft=1.10
BC Fb=1.10 Fc=1.10 Ft=1.10

Total Load Reactions (Lbs)

Jt	Down	Uplift	Horiz-
A	114	167 U	211 R
W	2650	647 U	
E	1903	363 U	252 R

Jt	Brg Size	Required
A	3.5"	1.5"
W	3.5"	2.8"
E	3.5"	2.2"

Plus 9 Wind Load Case(s)
Plus 1 UBC LL Load Case(s)
Plus 1 BC LL Load Case(s)
Plus 1 DL Load Case(s)

Robbins Engineering, Inc./Online Plus™

Membr	CSI	P Lbs		Axl-CSI-Bnd
--------Top Chords---------				
A -X	0.42	786	T 0.13	0.29
X -Q	0.52	1424	T 0.23	0.29
Q -B	0.24	1280	C 0.01	0.23
B -R	0.31	2047	C 0.11	0.20
R -C	0.31	1988	C 0.11	0.20
C -S	0.45	1718	C 0.01	0.44
S -D	0.46	2015	C 0.02	0.44
D -T	0.30	2475	C 0.04	0.26
T -U	0.41	2539	C 0.04	0.37
U -V	0.58	3034	C 0.16	0.42
V -Y	0.33	3842	C 0.19	0.14
--------Bottom Chords---------				
A -W	0.37	743	C 0.00	0.37
W -O	0.38	1383	C 0.08	0.30
O -N	0.30	1273	T 0.21	0.09
N -M	0.45	1774	T 0.29	0.16
M -L	0.61	2015	T 0.33	0.28
L -K	0.58	1844	T 0.30	0.28
K -I	0.26	71	T 0.01	0.25
H -J	0.60	2633	T 0.44	0.16
J -G	0.76	3433	T 0.57	0.19
F -E	0.03	168	T 0.02	0.01
----------Chord-Webs----------				
I -H	0.15	47	C 0.00	0.15
H -T	0.07	159	C 0.00	0.07
F -G	0.35	37	T 0.00	0.35
G -V	0.25	326	T 0.05	0.20
----------Webs----------				
X -W	0.22	747	T	
W -Q	0.27	2296	C	
Q -O	0.54	2953	T	
O -B	0.25	1307	C	
B -N	0.11	591	T	
N -R	0.13	212	C	
R -M	0.07	266	C	1 Br
M -C	0.32	678	T	
M -S	0.27	542	C	1 Br
L -S	0.10	161	T	
L -D	0.22	304	T	
K -D	0.23	644	C	1 Br
K -H	0.36	1985	T	
D -H	0.64	1398	T	
H -U	0.40	617	C	
J -U	0.05	353	T	
J -V	0.46	809	C	
G -Y	0.61	3343	T	
G -E	0.02	191	T	
E -Y	0.11	1790	C	WindLd

TL Defl -0.20" in A -W L/512
LL Defl -0.18" in M -L L/999
Shear // Grain in C -S 0.28

Plates for each ply each face.
Plate - MT20 20 Ga, Gross Area
Plate - MT2H 20 Ga, Gross Area

Jt	Type	Plt Size	X	Y	JSI
A	MT20	4.0x 6.0	Ctr	0.1	0.44
X	MT20	2.0x 4.0	Ctr	Ctr	0.45
Q	MT20	5.0x 7.0	-0.1	0.5	0.94
B	MT20	6.0x 6.0	Ctr	Ctr	0.42
R	MT20	3.0x 7.0	Ctr	Ctr	0.35
C	MT20	6.0x 6.0	1.0	-3.7	0.36
S	MT20	3.0x 7.0	Ctr	Ctr	0.29
D	MT20	6.0x 8.0	-1.1	-3.9	0.60
T	MT20	2.0x 4.0	Ctr	Ctr	0.28
U	MT20	5.0x 7.0	0.3	0.5	0.38
V	MT20	3.0x 7.0	Ctr	Ctr	0.27
Y	MT20	6.0x 8.0	Ctr	Ctr	0.86
W	MT20	4.0x 6.0	-1.2	0.2	0.35
O	MT20	5.0x 7.0	Ctr	-0.5	0.92
N	MT20	3.0x 7.0	Ctr	Ctr	0.25
M	MT20	5.0x 7.0	Ctr	-0.5	0.45
L	MT20	3.0x 7.0	Ctr	Ctr	0.29
K	MT20	3.0x 7.0	0.5	Ctr	0.75
I	MT20	2.0x 4.0	Ctr	Ctr	0.58
H	MT20	6.0x12.0	Ctr	0.7	0.45
J	MT20	4.0x 6.0	1.2	0.1	0.31
G	MT20	8.0x12.0	1.2	2.1	0.82
F	MT20	2.0x 4.0	Ctr	Ctr	0.58
E#	MT20	6.0x 6.0	-0.1	-0.2	0.29

APPROX. TRUSS WEIGHT: 447.4 LBS

= Plate Monitor used
REVIEWED BY:
Robbins Engineering, Inc.
6904 Parke East Blvd.
Tampa, FL 33610

REFER TO ROBBINS ENG. GENERAL NOTES AND SYMBOLS SHEET FOR ADDITIONAL SPECIFICATIONS.

NOTES:
Trusses Manufactured by:
Mayo Truss Co. Inc.
Analysis Conforms To:
FBC2007
TPI 2002
OH Loading
Soffit psf 2.0
This truss has been designed for 20.0 psf LL on the B.C. in areas where a rectangle
3- 6- 0 tall by
2- 0- 0 wide
will fit between the B.C. and any other member.
Design checked for 10 psf non-concurrent LL on BC.
NOTE: USER MODIFIED PLATES
This design may have plates selected through a plate monitor.
Wind Loads - ANSI / ASCE 7-05
Truss is designed as
Components and Claddings* for Exterior zone location.
Wind Speed: 120 mph
Mean Roof Height: 15-0
Exposure Category: B
Occupancy Factor : 1.00
Building Type: Enclosed
TC Dead Load: 5.0 psf
BC Dead Load: 5.0 psf
User-defined wind-exposed BC regions --From-- ---To---
0- 0- 0 9- 1-12
Max comp. force 3842 Lbs
Max tens. force 3433 Lbs

Fabrication Tolerance = 20%
This truss is designed for a creep factor of 1.5 which is used to calculate total load deflection.

Joaquin Velez, FL Lic. #68182
Robbins Engineering
6904 Parke East Blvd
Tampa, FL, 33610
FL Cert.#5555

November 25,2009

Job	Mark	Quan	Type	Span	P1-H1	Left OH	Right OH	Engineering
JOHNSON-SPEC	A20	1	SP	510800	3	2- 0- 0	2- 0- 0	T3555307

SPEC LOT15 ROSEWOOD ESTATES

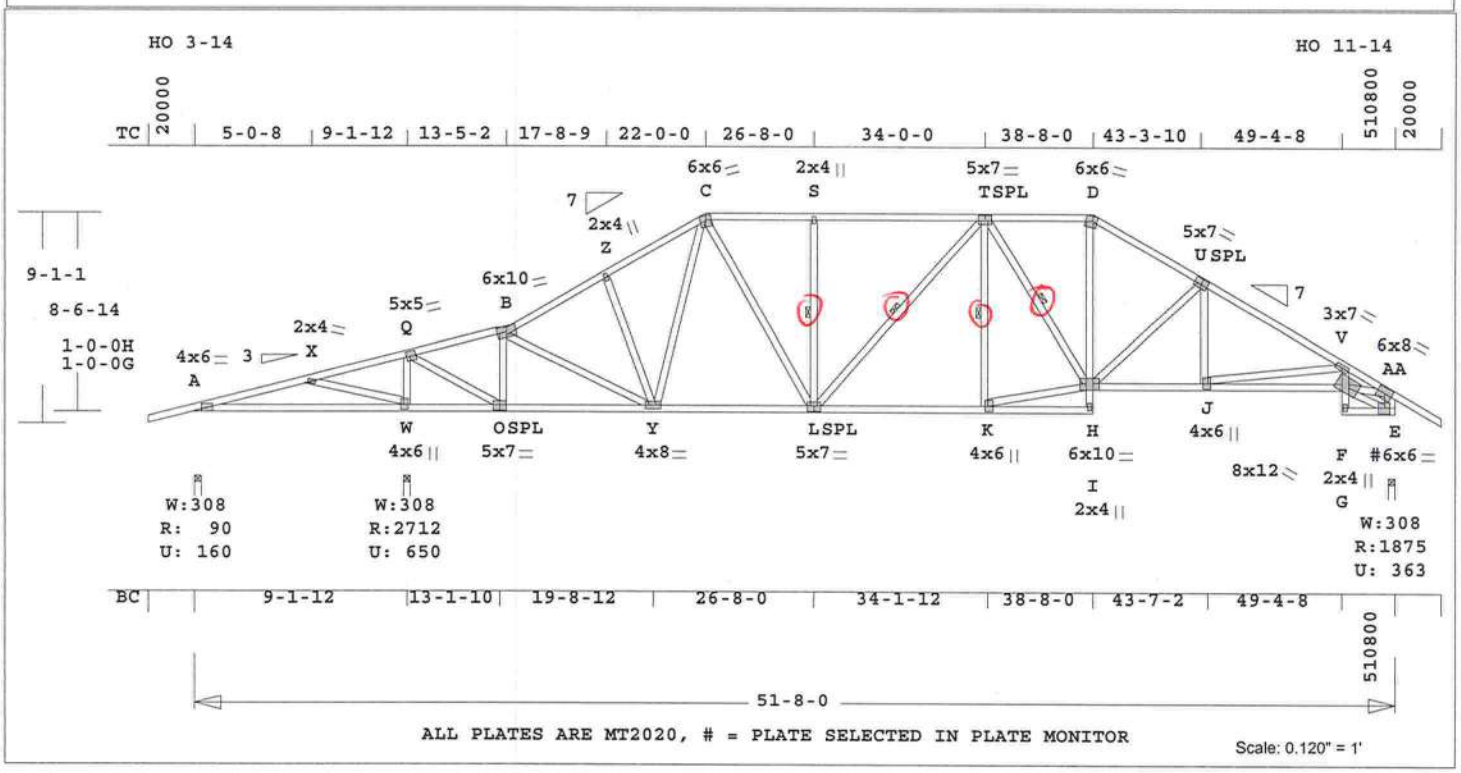

ALL PLATES ARE MT2020, # = PLATE SELECTED IN PLATE MONITOR

Scale: 0.120" = 1'

Online Plus -- Version 25.0.012
RUN DATE: 25-NOV-09

	CSI	-Size-	----Lumber----
TC	0.58	2x 4	SP-#2
BC	0.75	2x 4	SP-#2
CW	0.34	2x 4	SP-#2
WB	0.61	2x 4	SP-#2
--	0.10	2x 6	SP-#2
	E -AA		

Brace truss as follows:

	O.C.	From	To
TC	Cont.	0- 0- 0	51- 8- 0
BC	Cont.	0- 0- 0	51- 8- 0

One Continuous Lateral Brace
L -S L -T K -T T -H
Attach CLB with (2)-10d nails at each web.

psf-Ld	Dead	Live
TC	10.0	20.0
BC	10.0	0.0
TC+BC	20.0	20.0

Total 40.0 Spacing 24.0"
Lumber Duration Factor 1.25
Plate Duration Factor 1.25
TC Fb=1.15 Fc=1.10 Ft=1.10
BC Fb=1.10 Fc=1.10 Ft=1.10

Total Load Reactions (Lbs)

Jt	Down	Uplift	Horiz-
A	90	161 U	181 R
W	2713	650 U	
E	1876	363 U	221 R

Jt	Brg Size	Required
A	3.5"	1.5"
W	3.5"	2.9"
E	3.5"	2.2"

Plus 9 Wind Load Case(s)
Plus 1 UBC LL Load Case(s)
Plus 1 BC LL Load Case(s)
Plus 1 DL Load Case(s)

Membr	CSI	P Lbs	Axl-CSI-Bnd
----------Top Chords----------			
A -X	0.45	875 T	0.15 0.30
X -Q	0.55	1528 T	0.25 0.30
Q -B	0.19	1146 C	0.00 0.19
B -Z	0.27	2176 C	0.11 0.16
Z -C	0.28	2098 C	0.12 0.16
C -S	0.38	2158 C	0.03 0.35
S -T	0.52	2158 C	0.08 0.44
T -D	0.45	2145 C	0.03 0.42
D -U	0.38	2494 C	0.14 0.24
U -V	0.58	2973 C	0.15 0.43
V -AA	0.34	3795 C	0.19 0.15
--------Bottom Chords---------			
A -W	0.36	828 C	0.00 0.36
W -O	0.40	1486 C	0.09 0.31
O -Y	0.46	1150 T	0.19 0.27
Y -L	0.64	1756 T	0.29 0.35
L -K	0.72	2218 T	0.37 0.35
K -I	0.26	50 T	0.00 0.26
H -J	0.58	2577 T	0.43 0.15
J -G	0.75	3395 T	0.57 0.18
F -E	0.03	165 T	0.02 0.01
----------Chord-Webs----------			
I -H	0.10	57 T	0.00 0.10
H -D	0.23	1026 T	0.18 0.05
F -G	0.34	37 T	0.00 0.34
G -V	0.25	326 T	0.05 0.20
----------Webs----------			
X -W	0.22	754 T	
W -Q	0.27	2353 C	
Q -O	0.54	2974 T	
O -B	0.26	1408 C	
B -Y	0.24	827 T	
Z -Y	0.18	313 C	
Y -C	0.06	214 T	
C -L	0.41	791 T	
L -S	0.10	362 C	1 Br
L -T	0.05	122 C	1 Br
K -T	0.06	227 C	1 Br
K -H	0.41	2220 T	
T -H	0.04	137 C	1 Br
H -U	0.38	578 C	
J -U	0.05	353 T	
J -V	0.47	827 C	
G -AA	0.61	3305 T	
G -E	0.02	187 C	
E -AA	0.10	1765 C	WindLd

TL Defl -0.21" in A -W L/505
LL Defl -0.21" in L -K L/999
Shear // Grain in S -T 0.29

Plates for each ply each face.
Plate - MT20 20 Ga, Gross Area
Plate - MT2H 20 Ga, Gross Area

Jt	Type	Plt Size	X	Y	JSI
A	MT20	4.0x 6.0	Ctr	0.1	0.44
X	MT20	2.0x 4.0	Ctr	Ctr	0.45
Q	MT20	5.0x 5.0	0.5	0.1	0.95
B	MT20	6.0x10.0	Ctr	Ctr	0.39
Z	MT20	2.0x 4.0	Ctr	Ctr	0.30
C	MT20	6.0x 6.0	0.1	-4.2	0.53
S	MT20	2.0x 4.0	Ctr	Ctr	0.31
T	MT20	5.0x 7.0	Ctr	0.5	0.46
D	MT20	6.0x 6.0	-1.0	-3.7	0.45
U	MT20	5.0x 7.0	0.3	0.5	0.38
V	MT20	3.0x 7.0	Ctr	Ctr	0.28
AA	MT20	6.0x 8.0	Ctr	Ctr	0.85
W	MT20	4.0x 6.0	-1.2	0.2	0.35
O	MT20	5.0x 7.0	Ctr	-0.5	0.94
Y	MT20	4.0x 8.0	Ctr	Ctr	0.51
L	MT20	5.0x 7.0	Ctr	-0.5	0.54
K	MT20	4.0x 6.0	2.2	0.3	0.84
I	MT20	2.0x 4.0	Ctr	Ctr	0.58
H	MT20	6.0x10.0	Ctr	1.2	0.46
J	MT20	4.0x 6.0	1.2	0.1	0.32
G	MT20	8.0x12.0	1.2	2.1	0.81
F	MT20	2.0x 4.0	Ctr	Ctr	0.58
E#	MT20	6.0x 6.0	-0.1	-0.2	0.29

APPROX. TRUSS WEIGHT: 425.7 LBS

= Plate Monitor used
REVIEWED BY:
Robbins Engineering, Inc.
6904 Parke East Blvd.
Tampa, FL 33610

REFER TO ROBBINS ENG. GENERAL NOTES AND SYMBOLS SHEET FOR ADDITIONAL SPECIFICATIONS.

NOTES:
Trusses Manufactured by:
Mayo Truss Co. Inc.
Analysis Conforms To:
FBC2007
TPI 2002
OH Loading
Soffit psf 2.0
This truss has been designed for 20.0 psf LL on the B.C. in areas where a rectangle
3- 6- 0 tall by
2- 0- 0 wide
will fit between the B.C. and any other member.
Design checked for 10 psf non-concurrent LL on BC.
NOTE: USER MODIFIED PLATES
This design may have plates selected through a plate monitor.
Wind Loads - ANSI / ASCE 7-05
Truss is designed as Components and Claddings* for Exterior zone location.
Wind Speed: 120 mph
Mean Roof Height: 15-0
Exposure Category: B
Occupancy Factor : 1.00
Building Type: Enclosed
TC Dead Load: 5.0 psf
BC Dead Load: 5.0 psf
User-defined wind-exposed BC regions --From-- ---To---
0- 0- 0 9- 1-12
Max comp. force 3795 Lbs
Max tens. force 3395 Lbs
Fabrication Tolerance = 20%
This truss is designed for a creep factor of 1.5 which is used to calculate total load deflection.

Robbins Engineering, Inc./Online Plus™

Joaquin Velez, FL Lic. #68182
Robbins Engineering
6904 Parke East Blvd
Tampa, FL, 33610
FL Cert.#5555

November 25,2009

Job	Mark	Quan	Type	Span	P1-H1	Left OH	Right OH	Engineering
JOHNSON-SPEC	A21	1	SP	510800	3	2- 0- 0	2- 0- 0	T3555308

SPEC LOT15 ROSEWOOD ESTATES

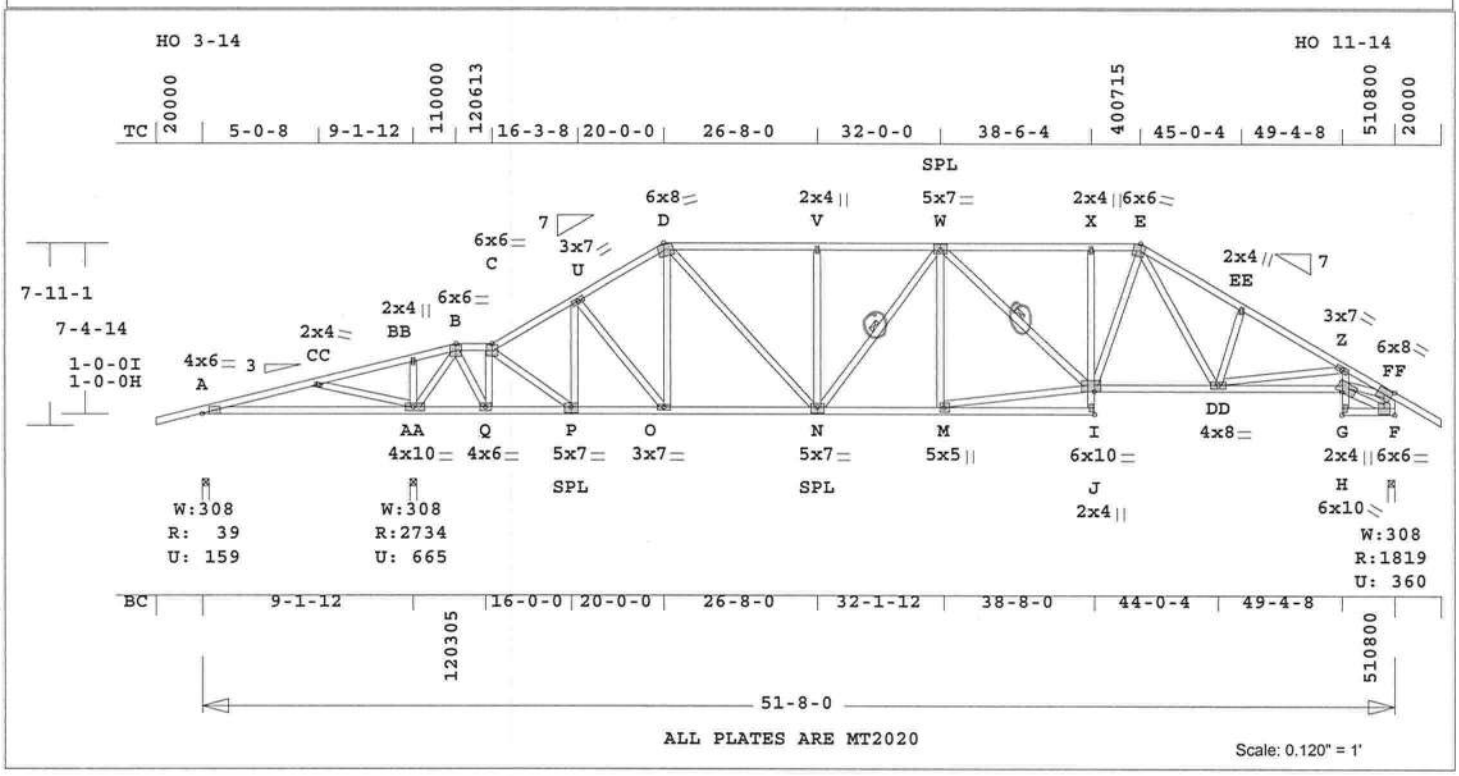

Robbins Engineering, Inc./Online Plus™

Online Plus -- Version 25.0.012
RUN DATE: 25-NOV-09

	CSI	-Size-	----Lumber----
TC	0.69	2x 4	SP-#2
BC	0.70	2x 4	SP-#2
CW	0.33	2x 4	SP-#2
WB	0.58	2x 4	SP-#2
--	0.10	2x 6	SP-#2
	F -FF		

Brace truss as follows:

	O.C.	From	To
TC	Cont.	0- 0- 0	51- 8- 0
BC	Cont.	0- 0- 0	51- 8- 0

One Continuous Lateral Brace
N -W W -I
Attach CLB with (2)-10d nails at each web.

psf-Ld	Dead	Live
TC	10.0	20.0
BC	10.0	0.0
TC+BC	20.0	20.0
Total	40.0	Spacing 24.0"

Lumber Duration Factor 1.25
Plate Duration Factor 1.25
TC Fb=1.15 Fc=1.10 Ft=1.10
BC Fb=1.10 Fc=1.10 Ft=1.10

Total Load Reactions (Lbs)

Jt	Down	Uplift	Horiz-
A	40	159 U	154 R
AA	2735	665 U	
F	1820	360 U	191 R

Jt	Brg Size	Required
A	3.5"	1.5"
AA	3.5"	2.9"
F	3.5"	2.1"

Plus 9 Wind Load Case(s)
Plus 1 UBC LL Load Case(s)
Plus 1 BC LL Load Case(s)
Plus 1 DL Load Case(s)

Membr	CSI	P Lbs	Axl-CSI-Bnd	
----------Top Chords----------				
A -CC	0.48	1073 T	0.18	0.30
CC-BB	0.58	1716 T	0.28	0.30
BB-B	0.69	1666 T	0.28	0.41
B -C	0.41	581 C	0.00	0.41
C -U	0.18	1747 C	0.09	0.09
U -D	0.24	1977 C	0.02	0.22
D -V	0.45	2364 C	0.07	0.38
V -W	0.37	2364 C	0.03	0.34
W -X	0.43	2453 C	0.08	0.35
X -E	0.31	2460 C	0.15	0.16
E -EE	0.33	2879 C	0.16	0.17
EE-Z	0.34	2952 C	0.09	0.25
Z -FF	0.21	3581 C	0.18	0.03
--------Bottom Chords---------				
A -AA	0.39	1020 C	0.00	0.39
AA-Q	0.39	272 T	0.00	0.39
Q -P	0.18	631 T	0.10	0.08
P -O	0.45	1512 T	0.25	0.20
O -N	0.48	1717 T	0.28	0.20
N -M	0.59	2485 T	0.41	0.18
M -J	0.23	79 T	0.00	0.23
I -DD	0.52	2178 T	0.36	0.16
DD-H	0.70	3179 T	0.53	0.17
G -F	0.03	159 T	0.02	0.01
----------Chord-Webs----------				
J -I	0.16	107 T	0.00	0.16
I -X	0.12	281 C	0.02	0.10
G -H	0.33	37 T	0.00	0.33
H -Z	0.23	304 T	0.05	0.18
----------Webs----------				
CC-AA	0.22	761 T		
AA-BB	0.04	389 C		
AA-B	0.43	2439 C		
B -Q	0.30	1672 T		
Q -C	0.20	1459 C		
C -P	0.20	1083 T		
P -U	0.21	568 C		
U -O	0.05	321 T		
O -D	0.03	101 T		
D -N	0.58	952 T		
N -V	0.28	370 C		
N -W	0.06	201 C		1 Br
M -W	0.13	181 T		
M -I	0.50	2434 T		
W -I	0.01	99 T		1 Br
I -E	0.20	812 T		
E -DD	0.21	612 T		
DD-EE	0.06	307 C		
DD-Z	0.29	621 C		
H -FF	0.57	3099 T		
H -F	0.01	179 C		
F -FF	0.10	1712 C	WindLd	

TL Defl -0.20" in A -AA L/527
LL Defl -0.19" in N -M L/999
Shear // Grain in BB-B 0.33

Plates for each ply each face.
Plate - MT20 20 Ga, Gross Area
Plate - MT2H 20 Ga, Gross Area

Jt	Type	Plt Size	X	Y	JSI
A	MT20	4.0x 6.0	Ctr	0.1	0.44
CC	MT20	2.0x 4.0	Ctr	Ctr	0.45
BB	MT20	2.0x 4.0	Ctr	Ctr	0.30
B	MT20	6.0x 6.0	Ctr	-0.2	0.50
C	MT20	6.0x 6.0	Ctr	Ctr	0.41
U	MT20	3.0x 7.0	Ctr	Ctr	0.35
D	MT20	6.0x 8.0	1.1	-3.9	0.46
V	MT20	2.0x 4.0	Ctr	Ctr	0.31
W	MT20	5.0x 7.0	Ctr	0.5	0.44
X	MT20	2.0x 4.0	Ctr	Ctr	0.31
E	MT20	6.0x 6.0	-1.0	-3.7	0.53
EE	MT20	2.0x 4.0	Ctr	Ctr	0.30
Z	MT20	3.0x 7.0	Ctr	Ctr	0.25
FF	MT20	6.0x 8.0	Ctr	Ctr	0.80
AA	MT20	4.0x10.0	1.0	Ctr	0.74
Q	MT20	4.0x 6.0	Ctr	Ctr	0.82
P	MT20	5.0x 7.0	Ctr	-0.5	0.39
O	MT20	3.0x 7.0	Ctr	Ctr	0.26
N	MT20	5.0x 7.0	Ctr	-0.5	0.63
M	MT20	5.0x 5.0	2.2	0.2	0.84
J	MT20	2.0x 4.0	Ctr	Ctr	0.58
I	MT20	6.0x10.0	Ctr	1.2	0.47
DD	MT20	4.0x 8.0	Ctr	Ctr	0.30
H	MT20	6.0x10.0	0.7	1.2	0.91
G	MT20	2.0x 4.0	Ctr	Ctr	0.58
F	MT20	6.0x 6.0	Ctr	Ctr	0.25

REVIEWED BY:
Robbins Engineering, Inc.
6904 Parke East Blvd.
Tampa, FL 33610

REFER TO ROBBINS ENG. GENERAL NOTES AND SYMBOLS SHEET FOR ADDITIONAL SPECIFICATIONS.

NOTES:
Trusses Manufactured by:
Mayo Truss Co. Inc.
Analysis Conforms To:
FBC2007
TPI 2002
OH Loading
Soffit psf 2.0
This truss has been designed for 20.0 psf LL on the B.C. in areas where a rectangle
3- 6- 0 tall by
2- 0- 0 wide
will fit between the B.C. and any other member.
Design checked for 10 psf non-concurrent LL on BC.
Wind Loads - ANSI / ASCE 7-05
Truss is designed as
Components and Claddings* for Exterior zone location.
Wind Speed: 120 mph
Mean Roof Height: 15-0
Exposure Category: B
Occupancy Factor : 1.00
Building Type: Enclosed
TC Dead Load: 5.0 psf
BC Dead Load: 5.0 psf
User-defined wind-exposed BC

APPROX. TRUSS WEIGHT: 431.1 LBS

regions	--From--	---To---
	0- 0- 0	9- 1-12

Max comp. force 3581 Lbs
Max tens. force 3179 Lbs
Connector Plate Fabrication Tolerance = 20%
This truss is designed for a creep factor of 1.5 which is used to calculate total load deflection.

Joaquin Velez, FL Lic. #68182
Robbins Engineering
6904 Parke East Blvd
Tampa, FL, 33610
FL Cert.#5555

November 25,2009

Job	Mark	Quan	Type	Span	P1-H1	Left OH	Right OH	Engineering
JOHNSON-SPEC	A22	1	SP	510800	3	2- 0- 0	2- 0- 0	T3555309

SPEC LOT15 ROSEWOOD ESTATES

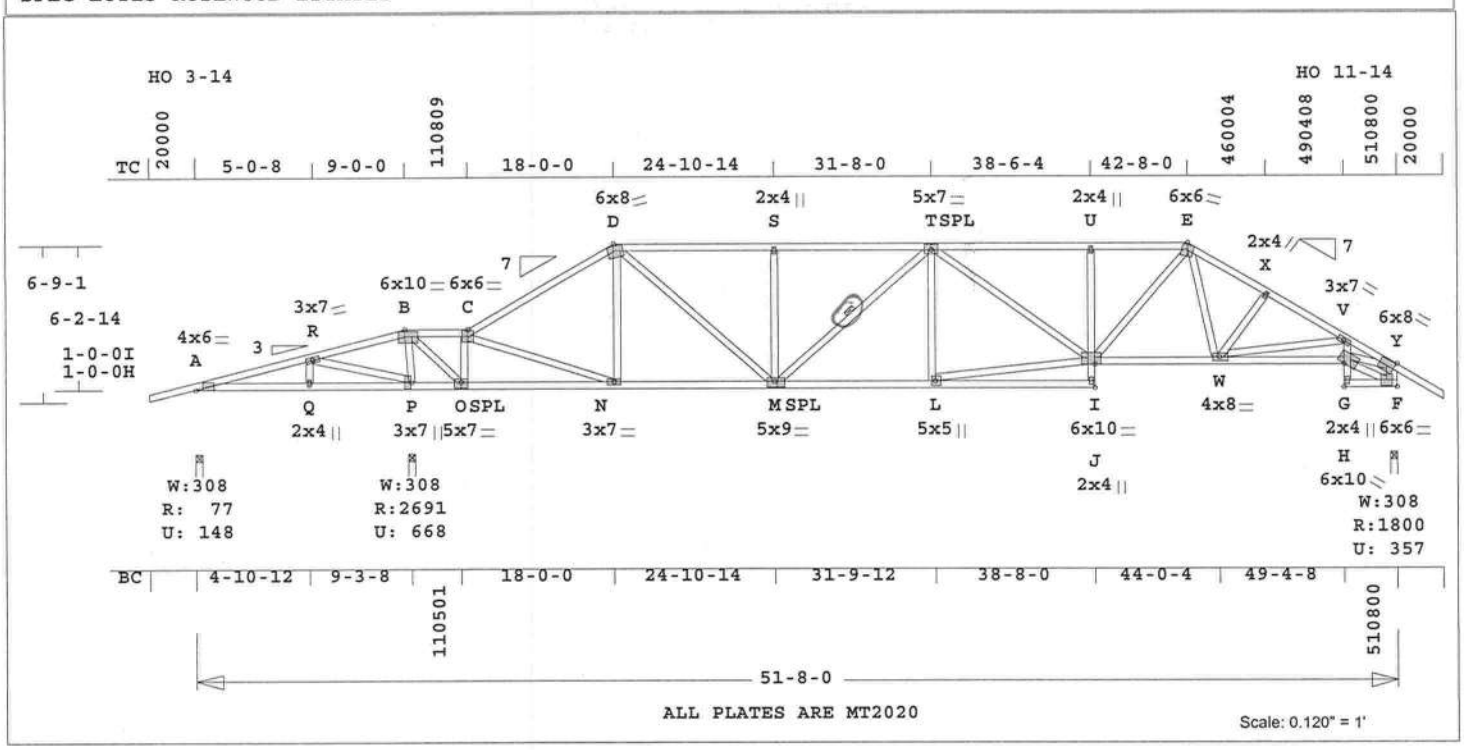

Online Plus -- Version 25.0.012
RUN DATE: 25-NOV-09

	CSI	-Size-	----Lumber----
TC	0.62	2x 4	SP-#2
BC	0.71	2x 4	SP-#2
CW	0.32	2x 4	SP-#2
WB	0.69	2x 4	SP-#2
--	0.10	2x 6	SP-#2
	F -Y		

Brace truss as follows:

	O.C.	From	To
TC	Cont.	0- 0- 0	51- 8- 0
BC	Cont.	0- 0- 0	51- 8- 0

One Continuous Lateral Brace
M -T
Attach CLB with (2)-10d nails
at each web.

psf-Ld	Dead	Live
TC	10.0	20.0
BC	10.0	0.0
TC+BC	20.0	20.0

Total 40.0 Spacing 24.0"
Lumber Duration Factor 1.25
Plate Duration Factor 1.25
TC Fb=1.15 Fc=1.10 Ft=1.10
BC Fb=1.10 Fc=1.10 Ft=1.10

Total Load Reactions (Lbs)

Jt	Down	Uplift	Horiz-
A	77	149 U	128 R
P	2692	668 U	
F	1800	358 U	162 R

Jt	Brg Size	Required
A	3.5"	1.5"
P	3.5"	2.9"
F	3.5"	2.1"

Plus 9 Wind Load Case(s)
Plus 1 UBC LL Load Case(s)
Plus 1 BC LL Load Case(s)
Plus 1 DL Load Case(s)

Robbins Engineering, Inc./Online Plus™

Membr	CSI	P Lbs	Axl-CSI-Bnd
----------Top Chords----------			
A -R	0.48	815 T	0.14 0.34
R -B	0.62	1732 T	0.28 0.34
B -C	0.44	178 C	0.00 0.44
C -D	0.40	1888 C	0.06 0.34
D -S	0.44	2613 C	0.04 0.40
S -T	0.49	2613 C	0.04 0.45
T -U	0.53	2969 C	0.13 0.40
U -E	0.36	2982 C	0.06 0.30
E -X	0.27	2828 C	0.16 0.11
X -V	0.27	2967 C	0.07 0.20
V -Y	0.25	3493 C	0.09 0.16
--------Bottom Chords---------			
A -Q	0.14	776 C	0.00 0.14
Q -P	0.15	776 C	0.00 0.15
P -O	0.25	1835 C	0.13 0.12
O -N	0.25	258 T	0.00 0.25
N -M	0.48	1635 T	0.27 0.21
M -L	0.71	2929 T	0.49 0.22
L -J	0.30	125 T	0.00 0.30
I -W	0.56	2305 T	0.38 0.18
W -H	0.69	3090 T	0.51 0.18
G -F	0.03	155 T	0.02 0.01
----------Chord-Webs----------			
J -I	0.26	109 T	0.00 0.26
I -U	0.15	301 C	0.01 0.14
G -H	0.32	37 T	0.00 0.32
H -V	0.22	300 T	0.04 0.18
----------Webs----------			
Q -R	0.03	206 C	
R -P	0.30	1070 T	
B -P	0.27	2335 C	
B -O	0.45	2439 T	
O -C	0.18	1599 C	
C -N	0.52	1670 T	
N -D	0.15	292 C	
D -M	0.69	1294 T	
M -S	0.22	407 C	
M -T	0.13	421 C	1 Br
L -T	0.09	214 T	
L -I	0.69	2834 T	
T -I	0.02	103 T	
I -E	0.26	1015 T	
E -W	0.08	484 T	
W -X	0.06	281 C	
W -V	0.23	508 C	
H -Y	0.55	3012 T	
H -F	0.01	175 C	
F -Y	0.10	1695 C	WindLd

TL Defl -0.57" in L -J L/881
LL Defl -0.25" in M -L L/999
Shear // Grain in T -U 0.29

Plates for each ply each face.
Plate - MT20 20 Ga, Gross Area
Plate - MT2H 20 Ga, Gross Area

Jt	Type	Plt Size	X	Y	JSI
A	MT20	4.0x 6.0	Ctr	0.1	0.44
R	MT20	3.0x 7.0	Ctr	Ctr	0.35
B	MT20	6.0x10.0	Ctr	-0.3	0.57
C	MT20	6.0x 6.0	Ctr	Ctr	0.52
D	MT20	6.0x 8.0	1.1	-3.9	0.63
S	MT20	2.0x 4.0	Ctr	Ctr	0.31
T	MT20	5.0x 7.0	Ctr	0.5	0.44
U	MT20	2.0x 4.0	Ctr	Ctr	0.31
E	MT20	6.0x 6.0	-0.1	-4.2	0.52
X	MT20	2.0x 4.0	Ctr	Ctr	0.30
V	MT20	3.0x 7.0	Ctr	Ctr	0.25
Y	MT20	6.0x 8.0	Ctr	Ctr	0.78
Q	MT20	2.0x 4.0	Ctr	Ctr	0.31
P	MT20	3.0x 7.0	-2.0	0.4	0.57
O	MT20	5.0x 7.0	Ctr	-0.5	0.85
N	MT20	3.0x 7.0	Ctr	Ctr	0.68
M	MT20	5.0x 9.0	-0.5	-0.5	0.69
L	MT20	5.0x 5.0	2.2	0.2	0.98
J	MT20	2.0x 4.0	Ctr	Ctr	0.58
I	MT20	6.0x10.0	Ctr	1.2	0.54
W	MT20	4.0x 8.0	0.5	Ctr	0.35
H	MT20	6.0x10.0	0.7	1.2	0.89
G	MT20	2.0x 4.0	Ctr	Ctr	0.58
F	MT20	6.0x 6.0	Ctr	Ctr	0.25

REVIEWED BY:
Robbins Engineering, Inc.
6904 Parke East Blvd.
Tampa, FL 33610

REFER TO ROBBINS ENG. GENERAL NOTES AND SYMBOLS SHEET FOR ADDITIONAL SPECIFICATIONS.

NOTES:
Trusses Manufactured by:
Mayo Truss Co. Inc.
Analysis Conforms To:
FBC2007
TPI 2002
OH Loading
Soffit psf 2.0
This truss has been designed for 20.0 psf LL on the B.C. in areas where a rectangle
3- 6- 0 tall by
2- 0- 0 wide
will fit between the B.C. and any other member.
Design checked for 10 psf non-concurrent LL on BC.
Wind Loads - ANSI / ASCE 7-05
Truss is designed as Components and Claddings* for Exterior zone location.
Wind Speed: 120 mph
Mean Roof Height: 15-0
Exposure Category: B
Occupancy Factor : 1.00
Building Type: Enclosed
TC Dead Load: 5.0 psf
BC Dead Load: 5.0 psf
User-defined wind-exposed BC regions --From-- ---To---
0- 0- 0 9- 3- 8
Max comp. force 3493 Lbs
Max tens. force 3090 Lbs
Connector Plate Fabrication Tolerance = 20%
This truss is designed for a creep factor of 1.5 which is used to calculate total load deflection.

APPROX. TRUSS WEIGHT: 396.0 LBS

Joaquin Velez, FL Lic. #68182
Robbins Engineering
6904 Parke East Blvd
Tampa, FL, 33610
FL Cert.#5555

November 25,2009

Job	Mark	Quan	Type	Span	P1-H1	Left OH	Right OH	*Engineering*
JOHNSON-SPEC	*VJ3*	2	SP	20308	7	2- 0- 0	0	*T3555310*

SPEC LOT15 ROSEWOOD ESTATES

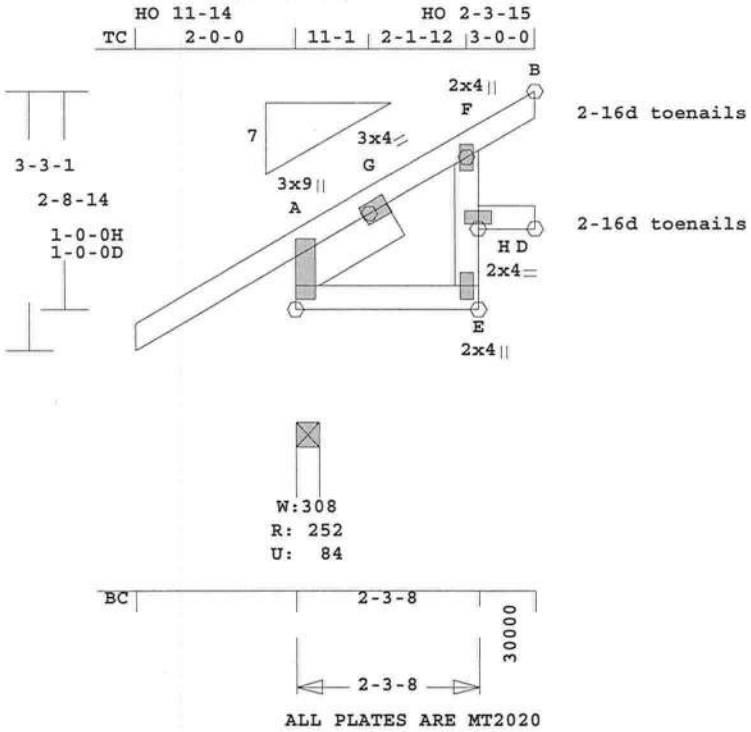

Scale: 0.413" = 1'

Robbins Engineering, Inc./Online Plus™ APPROX. TRUSS WEIGHT: 24.4 LBS

Online Plus -- Version 25.0.012
RUN DATE: 25-NOV-09

	CSI	-Size-	----Lumber----
TC	0.05	2x 4	SP-#2
BC	0.09	2x 4	SP-#2
CW	0.06	2x 4	SP-#2
SL	0.00	2x 6	SP-#2

Brace truss as follows:

	O.C.	From	To
TC	Cont.	0- 0- 0	2- 3- 8
BC	Cont.	0- 0- 0	2- 3- 8

psf-Ld	Dead	Live
TC	10.0	20.0
BC	10.0	0.0
TC+BC	20.0	20.0

Total 40.0 Spacing 24.0"
Lumber Duration Factor 1.25
Plate Duration Factor 1.25
TC Fb=1.15 Fc=1.10 Ft=1.10
BC Fb=1.10 Fc=1.10 Ft=1.10

Total Load Reactions (Lbs)

Jt	Down	Uplift	Horiz-
A	252	85 U	106 R
D	79	49 U	
B	21	48 U	43 R

Jt	Brg Size	Required
A	3.5"	1.5"
D	1.5"	1.5"
B	1.5"	1.5"

Plus 8 Wind Load Case(s)
Plus 1 UBC LL Load Case(s)
Plus 1 DL Load Case(s)

Membr	CSI	P Lbs	Axl-CSI-Bnd	
----------Top Chords----------				
A -G	0.04	37 C	0.00	0.04
G -F	0.05	34 T	0.00	0.05
F -B	0.01	37 T	0.00	0.01
--------Bottom Chords---------				
A -E	0.05	33 C	0.00	0.05
H -D	0.09	0 T	0.00	0.09
----------Chord-Webs----------				
E -H	0.05	35 T	0.00	0.05
H -F	0.06	73 T	0.01	0.05
----------Sliders----------				
A -G	0.00	65 C		

TL Defl 0.00" in A -E L/999
LL Defl 0.00" in A -E L/999
Shear // Grain in H -D 0.08

Plates for each ply each face.
Plate - MT20 20 Ga, Gross Area
Plate - MT2H 20 Ga, Gross Area

Jt	Type	Plt Size	X	Y	JSI
A	MT20	3.0x 9.0	1.5	0.3	0.58
G	MT20	3.0x 4.0	Ctr	Ctr	0.09
F	MT20	2.0x 4.0	Ctr	Ctr	0.12
E	MT20	2.0x 4.0	Ctr	Ctr	0.58
H	MT20	2.0x 4.0	Ctr	Ctr	0.58

REVIEWED BY:
Robbins Engineering, Inc.
6904 Parke East Blvd.
Tampa, FL 33610

REFER TO ROBBINS ENG. GENERAL NOTES AND SYMBOLS SHEET FOR ADDITIONAL SPECIFICATIONS.

For proper installation of toe-nails, refer to the 2001 National Design Specification (NDS) for Wood Construction

NOTES:
Trusses Manufactured by:
Mayo Truss Co. Inc.
Analysis Conforms To:
FBC2007
TPI 2002
OH Loading
Soffit psf 2.0
This truss has been designed for 20.0 psf LL on the B.C. in areas where a rectangle
3- 6- 0 tall by
2- 0- 0 wide
will fit between the B.C. and any other member.

Design checked for 10 psf non-concurrent LL on BC.
Wind Loads - ANSI / ASCE 7-05
Truss is designed as Components and Claddings* for Exterior zone location.
Wind Speed: 120 mph
Mean Roof Height: 15-0
Exposure Category: B
Occupancy Factor : 1.00
Building Type: Enclosed
TC Dead Load: 5.0 psf
BC Dead Load: 5.0 psf
Max comp. force 65 Lbs
Max tens. force 73 Lbs
Connector Plate Fabrication Tolerance = 20%
This truss is designed for a creep factor of 1.5 which is used to calculate total load deflection.

Joaquin Velez, FL Lic. #68182
Robbins Engineering
6904 Parke East Blvd
Tampa, FL, 33610
FL Cert.#5555

November 25,2009

Job	Mark	Quan	Type	Span	P1-H1	Left OH	Right OH	Engineering
JOHNSON-SPEC	VJ2	2	SP	50000	7	2- 0- 0	0	T3555311

SPEC LOT15 ROSEWOOD ESTATES

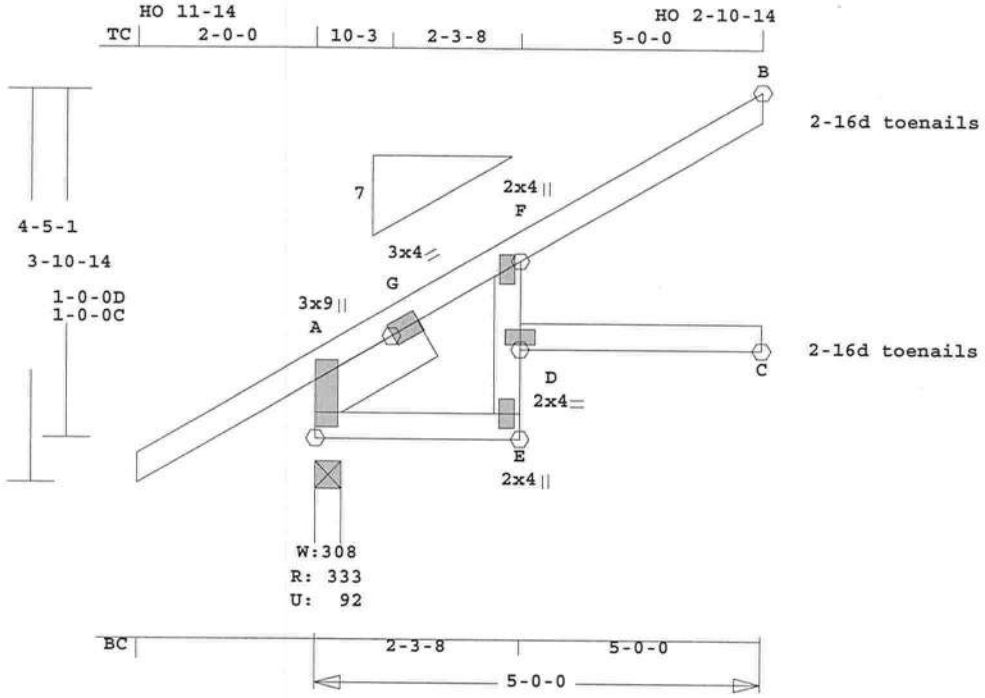

ALL PLATES ARE MT2020

Scale: 0.462" = 1'

Robbins Engineering, Inc./Online Plus™ APPROX. TRUSS WEIGHT: 32.5 LBS

Online Plus -- Version 25.0.012
RUN DATE: 25-NOV-09

	CSI	-Size-	----Lumber----
TC	0.17	2x 4	SP-#2
BC	0.29	2x 4	SP-#2
CW	0.17	2x 4	SP-#2
SL	0.01	2x 6	SP-#2

Brace truss as follows:

	O.C.	From	To
TC	Cont.	0- 0- 0	5- 0- 0
BC	Cont.	0- 0- 0	5- 0- 0

psf-Ld	Dead	Live
TC	10.0	20.0
BC	10.0	0.0
TC+BC	20.0	20.0

Total 40.0 Spacing 24.0"
Lumber Duration Factor 1.25
Plate Duration Factor 1.25
TC Fb=1.15 Fc=1.10 Ft=1.10
BC Fb=1.10 Fc=1.10 Ft=1.10

Total Load Reactions (Lbs)

Jt	Down	Uplift	Horiz-
A	334	93 U	177 R
C	92	21 U	
B	139	67 U	72 R

Jt	Brg Size	Required
A	3.5"	1.5"
C	1.5"	1.5"
B	1.5"	1.5"

Plus 8 Wind Load Case(s)
Plus 1 UBC LL Load Case(s)
Plus 1 DL Load Case(s)

Membr	CSI	P Lbs	Axl-CSI-Bnd	
----------Top Chords----------				
A -G	0.06	49 C	0.00	0.06
G -F	0.12	110 C	0.00	0.12
F -B	0.17	70 C	0.00	0.17
--------Bottom Chords---------				
A -E	0.07	104 T	0.00	0.07
D -C	0.29	0 T	0.00	0.29
----------Chord-Webs----------				
E -D	0.17	38 T	0.00	0.17
D -F	0.15	61 T	0.00	0.15
----------Sliders----------				
A -G	0.01	154 C		

TL Defl -0.06" in D -C L/969
LL Defl -0.02" in D -C L/999
Shear // Grain in F -B 0.12

Plates for each ply each face.
Plate - MT20 20 Ga, Gross Area
Plate - MT2H 20 Ga, Gross Area

Jt	Type	Plt Size	X	Y	JSI
A	MT20	3.0x 9.0	1.5	0.3	0.58
G	MT20	3.0x 4.0	Ctr	Ctr	0.09
F	MT20	2.0x 4.0	Ctr	Ctr	0.12
E	MT20	2.0x 4.0	Ctr	Ctr	0.58
D	MT20	2.0x 4.0	Ctr	Ctr	0.58

REVIEWED BY:
Robbins Engineering, Inc.
6904 Parke East Blvd.
Tampa, FL 33610

REFER TO ROBBINS ENG. GENERAL NOTES AND SYMBOLS SHEET FOR ADDITIONAL SPECIFICATIONS.

For proper installation of toe-nails, refer to the 2001 National Design Specification (NDS) for Wood Construction

NOTES:
Trusses Manufactured by:
Mayo Truss Co. Inc.
Analysis Conforms To:
FBC2007
TPI 2002
OH Loading
Soffit psf 2.0
This truss has been designed for 20.0 psf LL on the B.C. in areas where a rectangle
3- 6- 0 tall by
2- 0- 0 wide
will fit between the B.C. and any other member.

Design checked for 10 psf non-concurrent LL on BC.
Wind Loads - ANSI / ASCE 7-05
Truss is designed as Components and Claddings* for Exterior zone location.
Wind Speed: 120 mph
Mean Roof Height: 15-0
Exposure Category: B
Occupancy Factor : 1.00
Building Type: Enclosed
TC Dead Load: 5.0 psf
BC Dead Load: 5.0 psf
Max comp. force 154 Lbs
Max tens. force 104 Lbs
Connector Plate Fabrication Tolerance = 20%
This truss is designed for a creep factor of 1.5 which is used to calculate total load deflection.

Joaquin Velez, FL Lic. #68182
Robbins Engineering
6904 Parke East Blvd
Tampa, FL, 33610
FL Cert.#5555

November 25,2009

Job	Mark	Quan	Type	Span	P1-H1	Left OH	Right OH	Engineering
JOHNSON-SPEC	VCJ1	1	SP	91013	4.95	2- 9-15	0	T3555312

SPEC LOT15 ROSEWOOD ESTATES

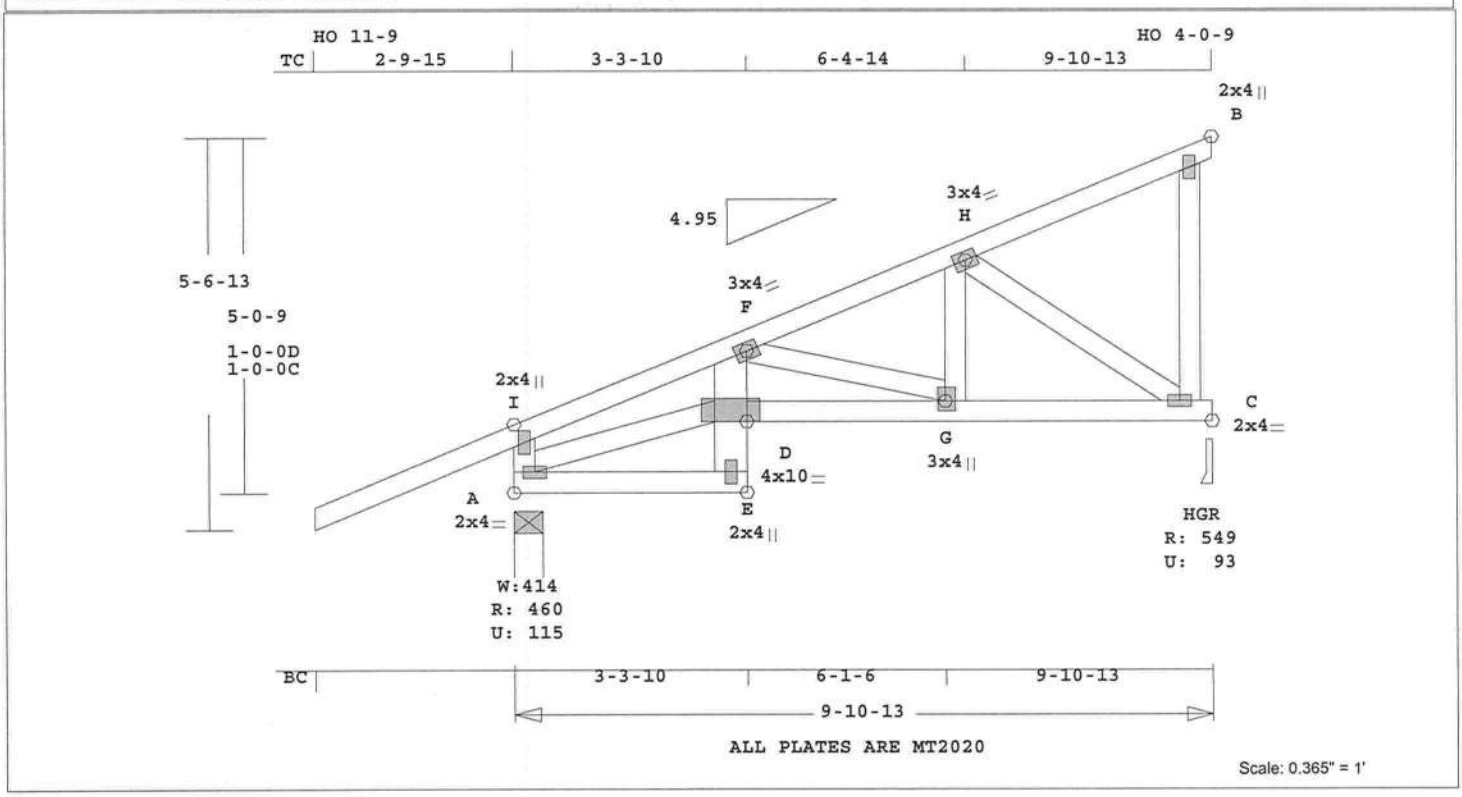

Robbins Engineering, Inc./Online Plus™ APPROX. TRUSS WEIGHT: 78.4 LBS

Online Plus -- Version 25.0.012
RUN DATE: 25-NOV-09

	CSI	-Size-	----Lumber----
TC	0.30	2x 4	SP-#2
BC	0.28	2x 4	SP-#2
CW	0.59	2x 6	SP-#2
WB	0.14	2x 4	SP-#2

Brace truss as follows:

	O.C.	From	To
TC	Cont.	0- 0- 0	9-10-13
BC	Cont.	0- 0- 0	9-10-13

psf-Ld	Dead	Live
TC	10.0	20.0
BC	10.0	0.0
TC+BC	20.0	20.0

Total 40.0 Spacing 24.0"
Lumber Duration Factor 1.25
Plate Duration Factor 1.25
TC Fb=1.00 Fc=1.00 Ft=1.00
BC Fb=1.00 Fc=1.00 Ft=1.00

Total Load Reactions (Lbs)

Jt	Down	Uplift	Horiz-
A	461	116 U	168 R
C	550	94 U	179 R

Jt	Brg Size	Required
A	4.9"	1.5"
C	3.5"	1.5"

LC# 1 Standard Loading
Dur Fctrs - Lbr 1.25 Plt 1.25

plf -	Dead	Live*	From	To
TC V	20	40	0.0'	9.9'
BC V	20	0	0.0'	9.9'
TC V	-20	-40	0.0'	
	22	45		9.9'
BC V	-20	0	0.0'	
	22	0		9.9'

Plus 7 Wind Load Case(s)
Plus 1 UBC LL Load Case(s)
Plus 1 DL Load Case(s)

Membr	CSI	P Lbs	Axl-CSI-Bnd	
----------Top Chords----------				
I -F	0.18	37 T	0.00	0.18
F -H	0.30	492 C	0.03	0.27
H -B	0.27	64 C	0.00	0.27
--------Bottom Chords---------				
A -E	0.11	590 T		
D -G	0.28	542 T	0.10	0.18
G -C	0.17	481 T	0.08	0.09
----------Chord-Webs----------				
E -D	0.59	42 T	0.00	0.59
D -F	0.51	201 C	0.00	0.51
----------Webs----------				
A -I	0.05	414 T	WindLd	
A -D	0.09	624 C		
F -G	0.01	136 T		
G -H	0.03	234 T		
H -C	0.14	580 C		
C -B	0.07	247 T	WindLd	

TL Defl -0.12" in D -G L/896
LL Defl -0.05" in D -G L/999
Shear // Grain in E -D 0.49

Plates for each ply each face.
Plate - MT20 20 Ga, Gross Area
Plate - MT2H 20 Ga, Gross Area

Jt	Type	Plt Size	X	Y	JSI
I	MT20	2.0x 4.0	Ctr	Ctr	0.29
F	MT20	3.0x 4.0	Ctr	Ctr	0.20
H	MT20	3.0x 4.0	Ctr	Ctr	0.29
B	MT20	2.0x 4.0	Ctr	Ctr	0.18
A	MT20	2.0x 4.0	Ctr	Ctr	0.50
E	MT20	2.0x 4.0	Ctr	Ctr	0.91
D	MT20	4.0x10.0	Ctr	0.2	0.34
G	MT20	3.0x 4.0-1.5		0.3	0.19
C	MT20	2.0x 4.0	Ctr	Ctr	0.57

REVIEWED BY:
Robbins Engineering, Inc.
6904 Parke East Blvd.
Tampa, FL 33610

REFER TO ROBBINS ENG. GENERAL NOTES AND SYMBOLS SHEET FOR ADDITIONAL SPECIFICATIONS.

NOTES:
Trusses Manufactured by:
Mayo Truss Co. Inc.
Analysis Conforms To:
FBC2007
TPI 2002
OH Loading
Soffit psf 2.0
This truss has been designed for 20.0 psf LL on the B.C. in areas where a rectangle 3- 6- 0 tall by 2- 0- 0 wide will fit between the B.C. and any other member.
Design checked for 10 psf non-concurrent LL on BC.
Wind Loads - ANSI / ASCE 7-05
Truss is designed as Components and Claddings* for Exterior zone location.
Wind Speed: 120 mph
Mean Roof Height: 15-0
Exposure Category: B
Occupancy Factor : 1.00
Building Type: Enclosed
TC Dead Load: 5.0 psf
BC Dead Load: 5.0 psf
Max comp. force 624 Lbs
Max tens. force 590 Lbs
Connector Plate Fabrication Tolerance = 20%
This truss is designed for a creep factor of 1.5 which is used to calculate total load deflection.

Joaquin Velez, FL Lic. #68182
Robbins Engineering
6904 Parke East Blvd
Tampa, FL, 33610
FL Cert.#5555

November 25,2009

Job	Mark	Quan	Type	Span	Pl-H1	Left OH	Right OH	Engineering
JOHNSON-SPEC	VJ1	3	SP	70000	7	2- 0- 0	0	T3555313

SPEC LOT15 ROSEWOOD ESTATES

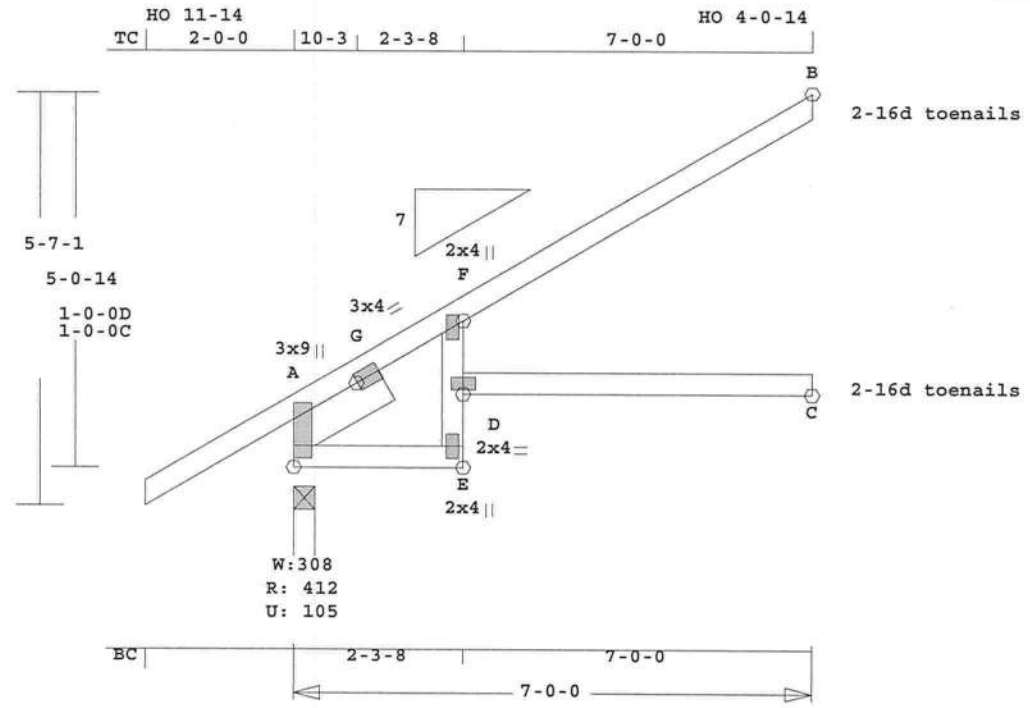

ALL PLATES ARE MT2020

Scale: 0.383" = 1'

Robbins Engineering, Inc./Online Plus™ APPROX. TRUSS WEIGHT: 40.7 LBS

Online Plus -- Version 25.0.012
RUN DATE: 25-NOV-09

	CSI	-Size-	----Lumber----
TC	0.40	2x 4	SP-#2
BC	0.53	2x 4	SP-#2
CW	0.30	2x 4	SP-#2
SL	0.01	2x 6	SP-#2

Brace truss as follows:

	O.C.	From	To
TC	Cont.	0- 0- 0	7- 0- 0
BC	Cont.	0- 0- 0	7- 0- 0

psf-Ld	Dead	Live
TC	10.0	20.0
BC	10.0	0.0
TC+BC	20.0	20.0

Total 40.0 Spacing 24.0"
Lumber Duration Factor 1.25
Plate Duration Factor 1.25
TC Fb=1.15 Fc=1.10 Ft=1.10
BC Fb=1.10 Fc=1.10 Ft=1.10

Total Load Reactions (Lbs)

Jt	Down	Uplift	Horiz-
A	413	106 U	240 R
C	129	14 U	
B	206	103 U	101 R

Jt	Brg Size	Required
A	3.5"	1.5"
C	1.5"	1.5"
B	1.5"	1.5"

Plus 8 Wind Load Case(s)
Plus 1 UBC LL Load Case(s)
Plus 1 DL Load Case(s)

Membr	CSI	P Lbs	Axl-CSI-Bnd	
----------Top Chords----------				
A -G	0.06	46 C	0.00	0.06
G -F	0.20	201 C	0.00	0.20
F -B	0.40	105 C	0.00	0.40
--------Bottom Chords---------				
A -E	0.08	186 T	0.02	0.06
D -C	0.53	0 T	0.00	0.53
----------Chord-Webs----------				
E -D	0.30	44 T	0.00	0.30
D -F	0.28	109 T	0.00	0.28
----------Sliders----------				
A -G	0.01	239 C		

TL Defl -0.24" in D -C L/331
LL Defl -0.10" in D -C L/810
Shear // Grain in F -B 0.18

Plates for each ply each face.
Plate - MT20 20 Ga, Gross Area
Plate - MT2H 20 Ga, Gross Area

Jt	Type	Plt Size	X	Y	JSI
A	MT20	3.0x 9.0	1.5	0.3	0.58
G	MT20	3.0x 4.0	Ctr	Ctr	0.09
F	MT20	2.0x 4.0	Ctr	Ctr	0.12
E	MT20	2.0x 4.0	Ctr	Ctr	0.58
D	MT20	2.0x 4.0	Ctr	Ctr	0.58

REVIEWED BY:
Robbins Engineering, Inc.
6904 Parke East Blvd.
Tampa, FL 33610

REFER TO ROBBINS ENG. GENERAL NOTES AND SYMBOLS SHEET FOR ADDITIONAL SPECIFICATIONS.

For proper installation of toe-nails, refer to the 2001 National Design Specification (NDS) for Wood Construction

NOTES:
Trusses Manufactured by:
Mayo Truss Co. Inc.
Analysis Conforms To:
FBC2007
TPI 2002
OH Loading
Soffit psf 2.0
This truss has been designed for 20.0 psf LL on the B.C. in areas where a rectangle
3- 6- 0 tall by
2- 0- 0 wide
will fit between the B.C. and any other member.

Design checked for 10 psf non-concurrent LL on BC.
Wind Loads - ANSI / ASCE 7-05
Truss is designed as Components and Claddings* for Exterior zone location.
Wind Speed: 120 mph
Mean Roof Height: 15-0
Exposure Category: B
Occupancy Factor : 1.00
Building Type: Enclosed
TC Dead Load: 5.0 psf
BC Dead Load: 5.0 psf
Max comp. force 239 Lbs
Max tens. force 186 Lbs
Connector Plate Fabrication Tolerance = 20%
This truss is designed for a creep factor of 1.5 which is used to calculate total load deflection.

Joaquin Velez, FL Lic. #68182
Robbins Engineering
6904 Parke East Blvd
Tampa, FL, 33610
FL Cert.#5555

November 25,2009

Job	Mark	Quan	Type	Span	Pl-Hl	Left OH	Right OH	Engineering
JOHNSON-SPEC	J2	31	JCA2	70000	7	2- 0- 0	0	T3555314

SPEC LOT15 ROSEWOOD ESTATES

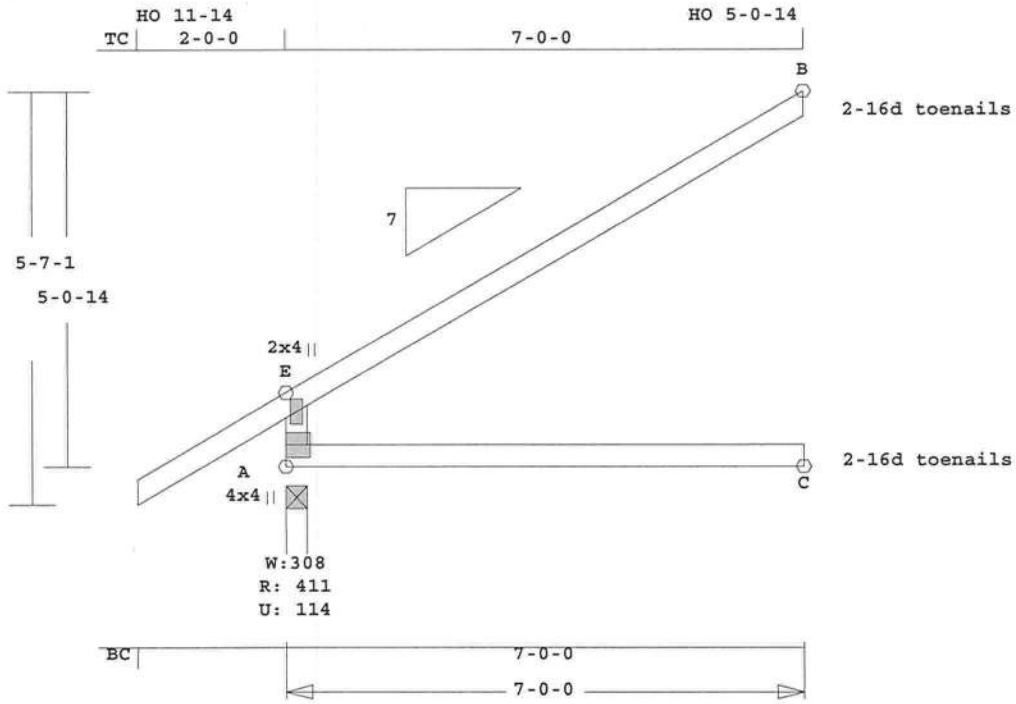

ALL PLATES ARE MT2020

Scale: 0.383" = 1'

Robbins Engineering, Inc./Online Plus™ APPROX. TRUSS WEIGHT: 34.2 LBS

Online Plus -- Version 25.0.012
RUN DATE: 25-NOV-09

	CSI	-Size-	----Lumber----
TC	0.51	2x 4	SP-#2
BC	0.43	2x 4	SP-#2
WB	0.51	2x 4	SP-#2

Brace truss as follows:

	O.C.	From	To
TC	Cont.	0- 0- 0	7- 0- 0
BC	Cont.	0- 0- 0	7- 0- 0

psf-Ld	Dead	Live
TC	10.0	20.0
BC	10.0	0.0
TC+BC	20.0	20.0

Total 40.0 Spacing 24.0"
Lumber Duration Factor 1.25
Plate Duration Factor 1.25
TC Fb=1.15 Fc=1.10 Ft=1.10
BC Fb=1.10 Fc=1.10 Ft=1.10

Total Load Reactions (Lbs)

Jt	Down	Uplift	Horiz-
A	411	114 U	279 R
C	134		
B	237	125 U	114 R

Jt	Brg Size	Required
A	3.5"	1.5"
C	3.5"	1.5"
B	1.5"	1.5"

Plus 8 Wind Load Case(s)
Plus 1 UBC LL Load Case(s)
Plus 1 DL Load Case(s)

Membr	CSI	P Lbs	Axl-CSI-Bnd	
----------Top Chords----------				
E -B	0.51	129 C	0.01	0.50
--------Bottom Chords---------				
A -C	0.43	0 T	0.00	0.43
----------Webs----------				
A -E	0.51	356 C	0.03	0.48

TL Defl -0.19" in A -C L/406
LL Defl -0.08" in A -C L/953
Shear // Grain in E -B 0.24

Plates for each ply each face.
Plate - MT20 20 Ga, Gross Area
Plate - MT2H 20 Ga, Gross Area

Jt	Type	Plt Size	X	Y	JSI
E	MT20	2.0x 4.0	Ctr	Ctr	0.17
A	MT20	4.0x 4.0	0.2	Ctr	0.11

REVIEWED BY:
Robbins Engineering, Inc.
6904 Parke East Blvd.
Tampa, FL 33610

REFER TO ROBBINS ENG. GENERAL NOTES AND SYMBOLS SHEET FOR ADDITIONAL SPECIFICATIONS.

For proper installation of toe-nails, refer to the 2001 National Design Specification (NDS) for Wood Construction

NOTES:
Trusses Manufactured by:
Mayo Truss Co. Inc.
Analysis Conforms To:
FBC2007
TPI 2002
OH Loading
Soffit psf 2.0
This truss has been designed for 20.0 psf LL on the B.C. in areas where a rectangle
3- 6- 0 tall by
2- 0- 0 wide
will fit between the B.C. and any other member.
Design checked for 10 psf non-concurrent LL on BC.
Wind Loads - ANSI / ASCE 7-05
Truss is designed as Components and Claddings* for Exterior zone location.
Wind Speed: 120 mph
Mean Roof Height: 15-0

Exposure Category: B
Occupancy Factor : 1.00
Building Type: Enclosed
TC Dead Load: 5.0 psf
BC Dead Load: 5.0 psf
Max comp. force 356 Lbs
Max tens. force 263 Lbs
Connector Plate Fabrication Tolerance = 20%
This truss is designed for a creep factor of 1.5 which is used to calculate total load deflection.

Joaquin Velez, FL Lic. #68182
Robbins Engineering
6904 Parke East Blvd
Tampa, FL, 33610
FL Cert.#5555

November 25,2009

Job	Mark	Quan	Type	Span	Pl-Hl	Left OH	Right OH	Engineering
JOHNSON-SPEC	J8	1	HHIP	70000	7	2- 0- 0	0	T3555315

SPEC LOT15 ROSEWOOD ESTATES

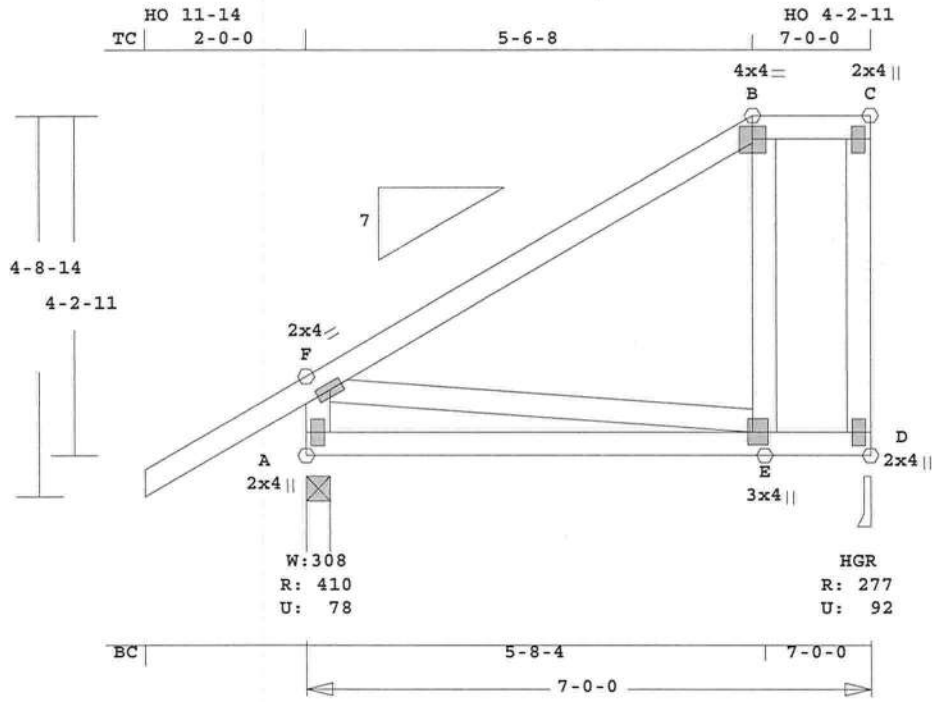

ALL PLATES ARE MT2020

Scale: 0.417" = 1'

Robbins Engineering, Inc./Online Plus™ APPROX. TRUSS WEIGHT: 57.5 LBS

Online Plus -- Version 25.0.012
RUN DATE: 25-NOV-09

	CSI	-Size-	----Lumber----
TC	0.42	2x 4	SP-#2
BC	0.44	2x 4	SP-#2
WB	0.08	2x 4	SP-#2

Brace truss as follows:

	O.C.	From	To
TC	Cont.	0- 0- 0	7- 0- 0
BC	Cont.	0- 0- 0	7- 0- 0

psf-Ld	Dead	Live
TC	10.0	20.0
BC	10.0	0.0
TC+BC	20.0	20.0

Total 40.0 Spacing 24.0"
Lumber Duration Factor 1.25
Plate Duration Factor 1.25
TC Fb=1.15 Fc=1.10 Ft=1.10
BC Fb=1.10 Fc=1.10 Ft=1.10

Total Load Reactions (Lbs)

Jt	Down	Uplift	Horiz-
A	411	79 U	93 R
D	277	93 U	164 R

Jt	Brg Size	Required
A	3.5"	1.5"
D	3.5"	1.5"

Plus 9 Wind Load Case(s)
Plus 1 UBC LL Load Case(s)
Plus 1 DL Load Case(s)

Membr	CSI	P Lbs	Axl-CSI-Bnd
----------Top Chords----------			
F -B	0.42	86 C	0.00 0.42
B -C	0.09	120 T	0.00 0.09
--------Bottom Chords---------			
A -E	0.44	81 T	0.00 0.44
E -D	0.43	129 T	0.00 0.43
----------Webs----------			
A -F	0.04	311 C	WindLd
F -E	0.03	122 T	
E -B	0.04	224 T	
D -C	0.08	73 C	WindLd

TL Defl -0.24" in A -E L/316
LL Defl -0.09" in A -E L/830
Shear // Grain in E -D 0.27

Plates for each ply each face.
Plate - MT20 20 Ga, Gross Area
Plate - MT2H 20 Ga, Gross Area

Jt	Type	Plt Size	X	Y	JSI
F	MT20	2.0x 4.0	Ctr	Ctr	0.31
B	MT20	4.0x 4.0	Ctr	Ctr	0.58
C	MT20	2.0x 4.0	Ctr	Ctr	0.12
A	MT20	2.0x 4.0	Ctr	Ctr	0.23
E	MT20	3.0x 4.0-1.0	0.1		0.33
D	MT20	2.0x 4.0	Ctr	Ctr	0.12

REVIEWED BY:
Robbins Engineering, Inc.
6904 Parke East Blvd.
Tampa, FL 33610

REFER TO ROBBINS ENG. GENERAL NOTES AND SYMBOLS SHEET FOR ADDITIONAL SPECIFICATIONS.

NOTES:
Trusses Manufactured by:
Mayo Truss Co. Inc.
Analysis Conforms To:
FBC2007
TPI 2002
OH Loading
Soffit psf 2.0
This truss has been designed for 20.0 psf LL on the B.C. in areas where a rectangle 3- 6- 0 tall by 2- 0- 0 wide will fit between the B.C. and any other member.
Design checked for 10 psf non-concurrent LL on BC.
Wind Loads - ANSI / ASCE 7-05
Truss is designed as Components and Claddings* for Exterior zone location.

Wind Speed: 120 mph
Mean Roof Height: 15-0
Exposure Category: B
Occupancy Factor : 1.00
Building Type: Enclosed
TC Dead Load: 5.0 psf
BC Dead Load: 5.0 psf
Max comp. force 311 Lbs
Max tens. force 284 Lbs
Connector Plate Fabrication Tolerance = 20%
This truss is designed for a creep factor of 1.5 which is used to calculate total load deflection.

Joaquin Velez, FL Lic. #68182
Robbins Engineering
6904 Parke East Blvd
Tampa, FL, 33610
FL Cert.#5555

November 25,2009

Job	Mark	Quan	Type	Span	Pl-Hl	Left OH	Right OH	Engineering
JOHNSON-SPEC	J13	2	JCA2	10000	3	2- 0- 0	0	T3555316

SPEC LOT15 ROSEWOOD ESTATES

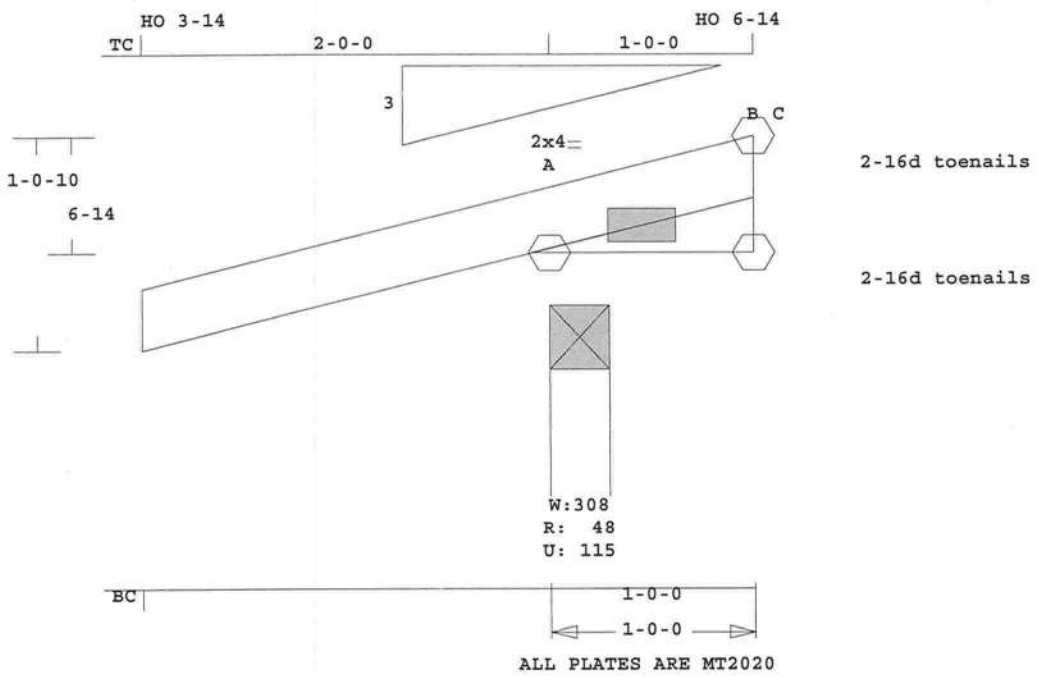

Scale: 1.055" = 1'

Robbins Engineering, Inc./Online Plus™ APPROX. TRUSS WEIGHT: 8.0 LBS

Online Plus -- Version 25.0.012
RUN DATE: 25-NOV-09

	CSI	-Size-	----Lumber----
TC	0.00	2x 4	SP-#2
BC	0.00	2x 4	SP-#2

Brace truss as follows:

	O.C.	From	To
TC	Cont.	0- 0- 0	1- 0- 0
BC	Cont.	0- 0- 0	1- 0- 0

psf-Ld	Dead	Live
TC	10.0	20.0
BC	10.0	0.0
TC+BC	20.0	20.0

Total 40.0 Spacing 24.0"
Lumber Duration Factor 1.25
Plate Duration Factor 1.25
TC Fb=1.15 Fc=1.10 Ft=1.10
BC Fb=1.10 Fc=1.10 Ft=1.10

Total Load Reactions (Lbs)

Jt	Down	Uplift	Horiz-
A	49	115 U	33 R
B	26	11 U	
C	18	6 U	5 R

Jt	Brg Size	Required
A	3.5"	1.5"
B	1.5"	1.5"
C	1.5"	1.5"

Plus 8 Wind Load Case(s)
Plus 1 UBC LL Load Case(s)
Plus 1 DL Load Case(s)

Membr	CSI	P Lbs	Axl-CSI-Bnd
----------Top Chords----------			
A -B	0.00	11 C	
--------Bottom Chords---------			
A -C	0.00	5 T	

TL Defl 0.00" in A -C L/999
LL Defl 0.00" in A -C L/999
Shear // Grain in A -B 0.03

Plates for each ply each face.
Plate - MT20 20 Ga, Gross Area
Plate - MT2H 20 Ga, Gross Area

Jt	Type	Plt Size	X	Y	JSI
A	MT20	2.0x 4.0	Ctr	Ctr	0.79

REVIEWED BY:
Robbins Engineering, Inc.
6904 Parke East Blvd.
Tampa, FL 33610

REFER TO ROBBINS ENG. GENERAL NOTES AND SYMBOLS SHEET FOR ADDITIONAL SPECIFICATIONS.

For proper installation of toe-nails, refer to the 2001 National Design Specification (NDS) for Wood Construction

NOTES:
Trusses Manufactured by:
Mayo Truss Co. Inc.
Analysis Conforms To:
FBC2007
TPI 2002
OH Loading
Soffit psf 2.0
This truss has been designed for 20.0 psf LL on the B.C. in areas where a rectangle
3- 6- 0 tall by
2- 0- 0 wide
will fit between the B.C. and any other member.
Design checked for 10 psf non-concurrent LL on BC.
Wind Loads - ANSI / ASCE 7-05
Truss is designed as
Components and Claddings* for Exterior zone location.
Wind Speed: 120 mph
Mean Roof Height: 15-0
Exposure Category: B
Occupancy Factor : 1.00
Building Type: Enclosed
TC Dead Load: 5.0 psf
BC Dead Load: 5.0 psf
User-defined wind-exposed BC regions --From-- ---To---
0- 1- 1 1- 1- 1
Max comp. force 11 Lbs
Max tens. force 5 Lbs
Connector Plate Fabrication Tolerance = 20%
This truss is designed for a creep factor of 1.5 which is used to calculate total load deflection.

Joaquin Velez, FL Lic. #68182
Robbins Engineering
6904 Parke East Blvd
Tampa, FL, 33610
FL Cert.#5555

November 25,2009

Job	Mark	Quan	Type	Span	P1-H1	Left OH	Right OH	Engineering
JOHNSON-SPEC	J12	2	JCA2	30000	3	2- 0- 0	0	T3555317

SPEC LOT15 ROSEWOOD ESTATES

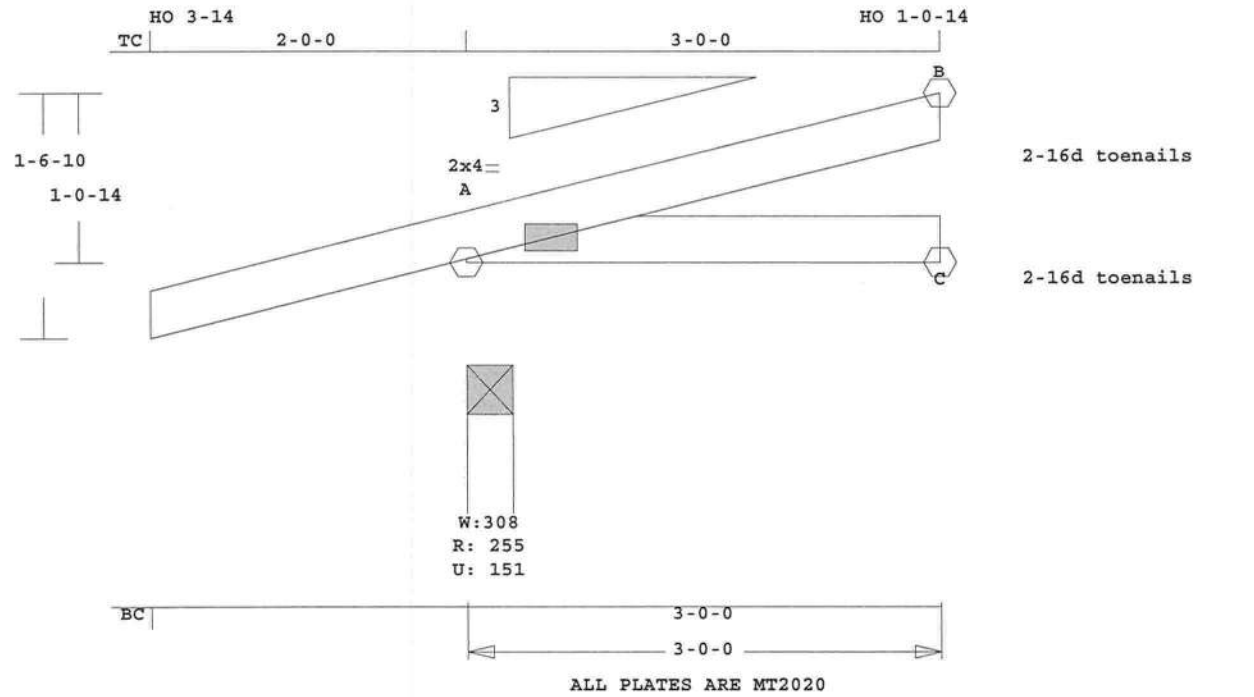

Scale: 0.818" = 1'

Robbins Engineering, Inc./Online Plus™ APPROX. TRUSS WEIGHT: 15.5 LBS

Online Plus -- Version 25.0.012
RUN DATE: 25-NOV-09

	CSI	-Size-	----Lumber----
TC	0.14	2x 4	SP-#2
BC	0.15	2x 4	SP-#2

Brace truss as follows:

	O.C.	From	To
TC	Cont.	0- 0- 0	3- 0- 0
BC	Cont.	0- 0- 0	3- 0- 0

psf-Ld	Dead	Live
TC	10.0	20.0
BC	10.0	0.0
TC+BC	20.0	20.0

Total 40.0 Spacing 24.0"
Lumber Duration Factor 1.25
Plate Duration Factor 1.25
TC Fb=1.15 Fc=1.10 Ft=1.10
BC Fb=1.10 Fc=1.10 Ft=1.10

Total Load Reactions (Lbs)

Jt	Down	Uplift	Horiz-
A	255	151 U	101 R
C	53	26 U	
B	74	40 U	18 R

Jt	Brg Size	Required
A	3.5"	1.5"
C	3.5"	1.5"
B	1.5"	1.5"

Plus 8 Wind Load Case(s)
Plus 1 UBC LL Load Case(s)
Plus 1 DL Load Case(s)

Membr	CSI	P Lbs	Axl-CSI-Bnd
----------Top Chords----------			
A -B	0.14	47 C	0.00 0.14
--------Bottom Chords---------			
A -C	0.15	0 T	0.00 0.15

TL Defl -0.01" in A -C L/999
LL Defl 0.00" in A -C L/999
Shear // Grain in A -B 0.16

Plates for each ply each face.
Plate - MT20 20 Ga, Gross Area
Plate - MT2H 20 Ga, Gross Area

Jt	Type	Plt Size	X	Y	JSI
A	MT20	2.0x 4.0	Ctr	Ctr	0.79

REVIEWED BY:
Robbins Engineering, Inc.
6904 Parke East Blvd.
Tampa, FL 33610

REFER TO ROBBINS ENG. GENERAL NOTES AND SYMBOLS SHEET FOR ADDITIONAL SPECIFICATIONS.

For proper installation of toe-nails, refer to the 2001 National Design Specification (NDS) for Wood Construction

NOTES:
Trusses Manufactured by:
Mayo Truss Co. Inc.
Analysis Conforms To:
FBC2007
TPI 2002
OH Loading
Soffit psf 2.0
This truss has been designed for 20.0 psf LL on the B.C. in areas where a rectangle
3- 6- 0 tall by
2- 0- 0 wide
will fit between the B.C. and any other member.
Design checked for 10 psf non-concurrent LL on BC.
Wind Loads - ANSI / ASCE 7-05
Truss is designed as
Components and Claddings* for Exterior zone location.
Wind Speed: 120 mph
Mean Roof Height: 15-0
Exposure Category: B
Occupancy Factor : 1.00
Building Type: Enclosed
TC Dead Load: 5.0 psf
BC Dead Load: 5.0 psf
User-defined wind-exposed BC regions --From-- ---To---
0- 0- 0 3- 0- 0
Max comp. force 47 Lbs
Max tens. force 12 Lbs
Connector Plate Fabrication Tolerance = 20%
This truss is designed for a creep factor of 1.5 which is used to calculate total load deflection.

Joaquin Velez, FL Lic. #68182
Robbins Engineering
6904 Parke East Blvd
Tampa, FL, 33610
FL Cert.#5555

November 25,2009

Job	Mark	Quan	Type	Span	P1-H1	Left OH	Right OH	Engineering
JOHNSON-SPEC	J11	2	JCA2	50000	3	2- 0- 0	0	T3555318

SPEC LOT15 ROSEWOOD ESTATES

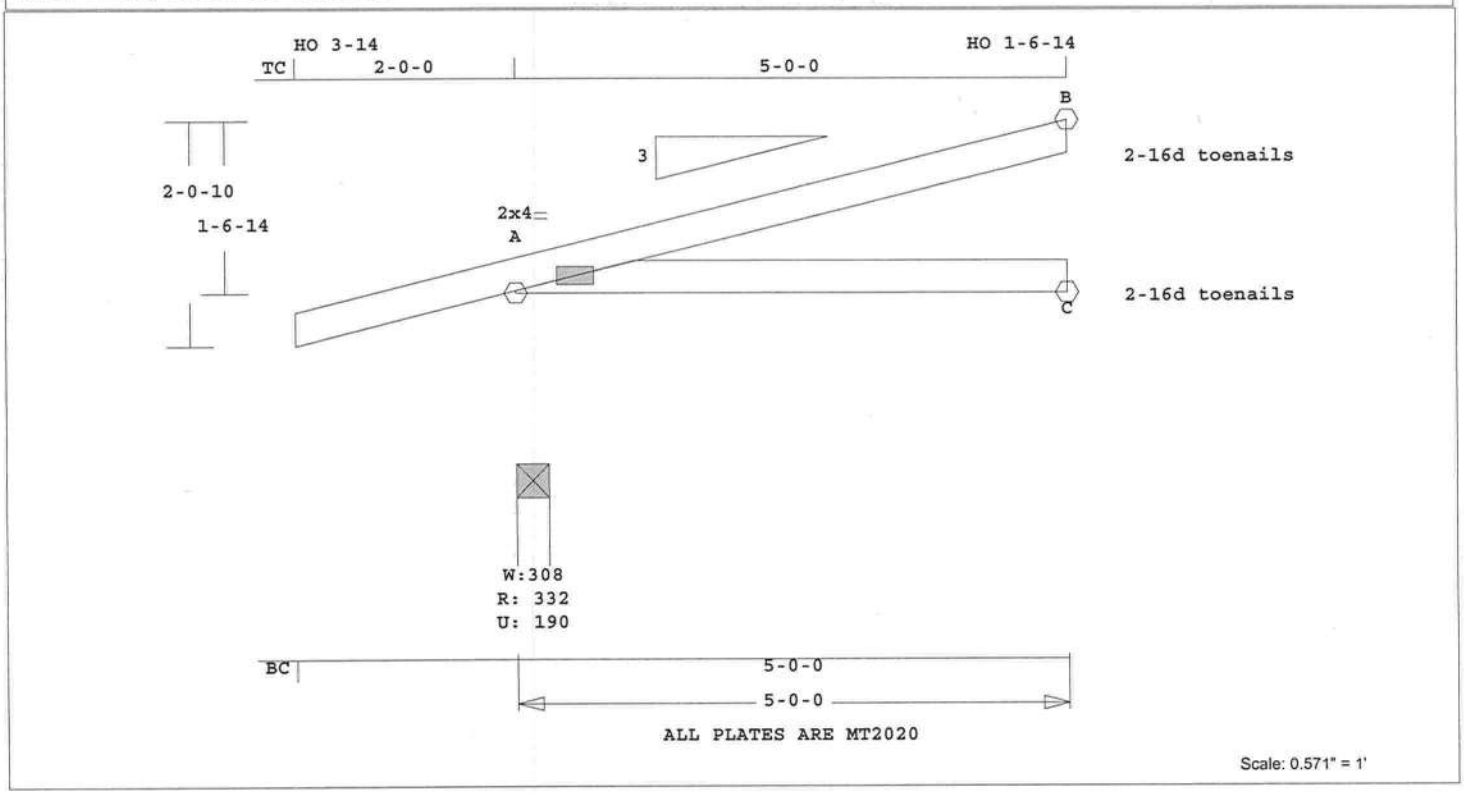

Robbins Engineering, Inc./Online Plus™ APPROX. TRUSS WEIGHT: 23.2 LBS

Online Plus -- Version 25.0.012
RUN DATE: 25-NOV-09

	CSI	-Size-	----Lumber----
TC	0.45	2x 4	SP-#2
BC	0.46	2x 4	SP-#2

Brace truss as follows:

	O.C.	From	To
TC	Cont.	0- 0- 0	5- 0- 0
BC	Cont.	0- 0- 0	5- 0- 0

psf-Ld	Dead	Live
TC	10.0	20.0
BC	10.0	0.0
TC+BC	20.0	20.0

Total 40.0 Spacing 24.0"
Lumber Duration Factor 1.25
Plate Duration Factor 1.25
TC Fb=1.15 Fc=1.10 Ft=1.10
BC Fb=1.10 Fc=1.10 Ft=1.10

Total Load Reactions (Lbs)

Jt	Down	Uplift	Horiz-
A	333	190 U	143 R
C	91	43 U	
B	130	70 U	31 R

Jt	Brg Size	Required
A	3.5"	1.5"
C	3.5"	1.5"
B	1.5"	1.5"

Plus 8 Wind Load Case(s)
Plus 1 UBC LL Load Case(s)
Plus 1 DL Load Case(s)

Membr	CSI	P Lbs	Axl-CSI-Bnd
----------Top Chords----------			
A -B	0.45	79 C	0.00 0.45
--------Bottom Chords---------			
A -C	0.46	0 T	0.00 0.46

TL Defl -0.05" in A -C L/999
LL Defl -0.02" in A -C L/999
Shear // Grain in A -B 0.28

Plates for each ply each face.
Plate - MT20 20 Ga, Gross Area
Plate - MT2H 20 Ga, Gross Area

Jt	Type	Plt Size	X	Y	JSI
A	MT20	2.0x 4.0	Ctr	Ctr	0.79

REVIEWED BY:
Robbins Engineering, Inc.
6904 Parke East Blvd.
Tampa, FL 33610

REFER TO ROBBINS ENG. GENERAL NOTES AND SYMBOLS SHEET FOR ADDITIONAL SPECIFICATIONS.

For proper installation of toe-nails, refer to the 2001 National Design Specification (NDS) for Wood Construction

NOTES:
Trusses Manufactured by:
Mayo Truss Co. Inc.
Analysis Conforms To:
FBC2007
TPI 2002
OH Loading
Soffit psf 2.0
This truss has been designed for 20.0 psf LL on the B.C. in areas where a rectangle
3- 6- 0 tall by
2- 0- 0 wide
will fit between the B.C. and any other member.
Design checked for 10 psf non-concurrent LL on BC.
Wind Loads - ANSI / ASCE 7-05
Truss is designed as
Components and Claddings*
for Exterior zone location.
Wind Speed: 120 mph
Mean Roof Height: 15-0
Exposure Category: B
Occupancy Factor : 1.00
Building Type: Enclosed
TC Dead Load: 5.0 psf
BC Dead Load: 5.0 psf
User-defined wind-exposed BC regions --From-- ---To---
0- 0- 0 5- 0- 0
Max comp. force 79 Lbs
Max tens. force 19 Lbs
Connector Plate Fabrication Tolerance = 20%
This truss is designed for a creep factor of 1.5 which is used to calculate total load deflection.

Joaquin Velez, FL Lic. #68182
Robbins Engineering
6904 Parke East Blvd
Tampa, FL, 33610
FL Cert.#5555

November 25,2009

Job	Mark	Quan	Type	Span	P1-H1	Left OH	Right OH	Engineering
JOHNSON-SPEC	CJ2	1	MONO.DD	91013	2.121	2- 9-15	0	T3555319

SPEC LOT15 ROSEWOOD ESTATES

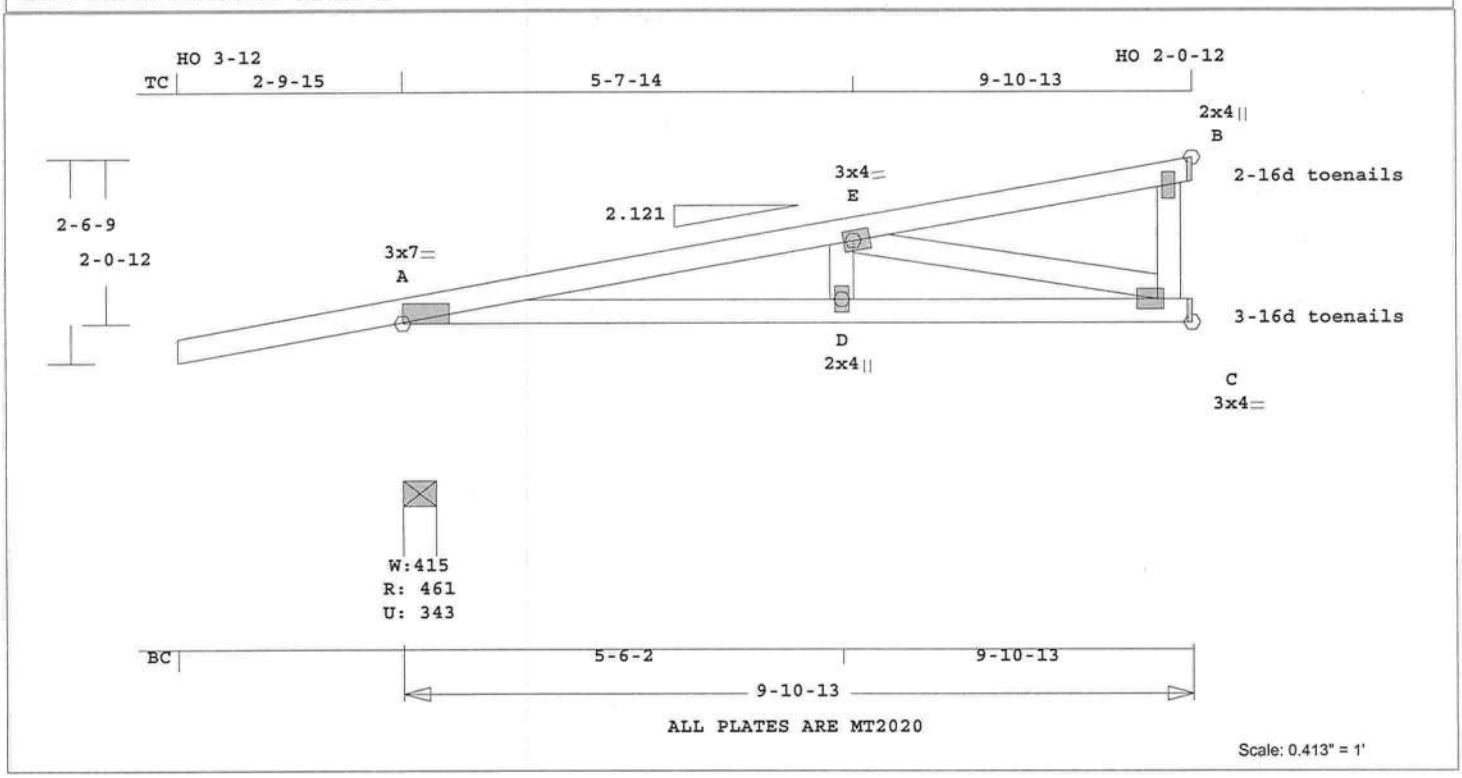

Robbins Engineering, Inc./Online Plus™ APPROX. TRUSS WEIGHT: 54.6 LBS

Online Plus -- Version 25.0.012
RUN DATE: 25-NOV-09

	CSI	-Size-	----Lumber----
TC	0.49	2x 4	SP-#2
BC	0.32	2x 4	SP-#2
WB	0.29	2x 4	SP-#2

Brace truss as follows:

	O.C.	From	To
TC	Cont.	0- 0- 0	9-10-13
BC	Cont.	0- 0- 0	9-10-13

psf-Ld	Dead	Live
TC	10.0	20.0
BC	10.0	0.0
TC+BC	20.0	20.0

Total 40.0 Spacing 24.0"
Lumber Duration Factor 1.25
Plate Duration Factor 1.25
TC Fb=1.00 Fc=1.00 Ft=1.00
BC Fb=1.00 Fc=1.00 Ft=1.00

Total Load Reactions (Lbs)

Jt	Down	Uplift	Horiz-
A	461	343 U	62 R
C	349	178 U	
B	230	139 U	80 R

Jt	Brg Size	Required
A	4.9"	1.5"
C	1.5"	1.5"
B	1.5"	1.5"

LC# 1 Girder Loading
Dur Fctrs - Lbr 1.25 Plt 1.25

plf -	Dead	Live*	From	To
TC V	20	40	0.0'	9.9'
BC V	20	0	0.0'	9.9'
TC V	-20	-40	0.0'	
	22	45		9.9'
BC V	-20	0	0.0'	
	22	0		9.9'

Plus 8 Wind Load Case(s)
Plus 1 UBC LL Load Case(s)
Plus 1 DL Load Case(s)

Membr	CSI	P Lbs	Axl-CSI-Bnd
----------Top Chords----------			
A -E	0.49	1757 T	0.25 0.24
E -B	0.34	48 T	0.00 0.34
--------Bottom Chords---------			
A -D	0.26	1781 C	0.19 0.07
D -C	0.32	1781 C	0.19 0.13
----------Webs----------			
D -E	0.03	337 C	
E -C	0.29	1886 T	
C -B	0.01	0 T	WindLd

TL Defl -0.08" in A -D L/999
LL Defl -0.03" in A -D L/999
Shear // Grain in E -B 0.27

Plates for each ply each face.
Plate - MT20 20 Ga, Gross Area
Plate - MT2H 20 Ga, Gross Area

Jt	Type	Plt Size	X	Y	JSI
A	MT20	3.0x 7.0	3.5	1.3	0.81
E	MT20	3.0x 4.0	0.5	0.1	0.82
B	MT20	2.0x 4.0	Ctr	Ctr	0.12
D	MT20	2.0x 4.0	Ctr	Ctr	0.19
C	MT20	3.0x 4.0-1.0	Ctr		0.83

REVIEWED BY:
Robbins Engineering, Inc.
6904 Parke East Blvd.
Tampa, FL 33610

REFER TO ROBBINS ENG. GENERAL NOTES AND SYMBOLS SHEET FOR ADDITIONAL SPECIFICATIONS.

For proper installation of toe-nails, refer to the 2001 National Design Specification (NDS) for Wood Construction

NOTES:
Trusses Manufactured by:
Mayo Truss Co. Inc.
Analysis Conforms To:
FBC2007
TPI 2002
Girder King Jack
Loading TC and BC
Setback 7- 0- 0
OH Loading
Soffit psf 2.0
Design checked for 10 psf non-concurrent LL on BC.
Use properly rated hangers for loads framing into girder truss.
Wind Loads - ANSI / ASCE 7-05
Truss is designed as
Components and Claddings*
for Exterior zone location.
Wind Speed: 120 mph
Mean Roof Height: 15-0
Exposure Category: B
Occupancy Factor : 1.00
Building Type: Enclosed
TC Dead Load: 5.0 psf
BC Dead Load: 5.0 psf
User-defined wind-exposed BC regions --From-- ---To---
0- 0- 0 9-10-13
Max comp. force 1781 Lbs
Max tens. force 1886 Lbs
Connector Plate Fabrication Tolerance = 20%
This truss is designed for a creep factor of 1.5 which is used to calculate total load deflection.

Joaquin Velez, FL Lic. #68182
Robbins Engineering
6904 Parke East Blvd
Tampa, FL, 33610
FL Cert.#5555

November 25,2009

Job	Mark	Quan	Type	Span	P1-H1	Left OH	Right OH	Engineering
JOHNSON-SPEC	J10	2	JCA2	70000	3	2- 0- 0	0	T3555320

SPEC LOT15 ROSEWOOD ESTATES

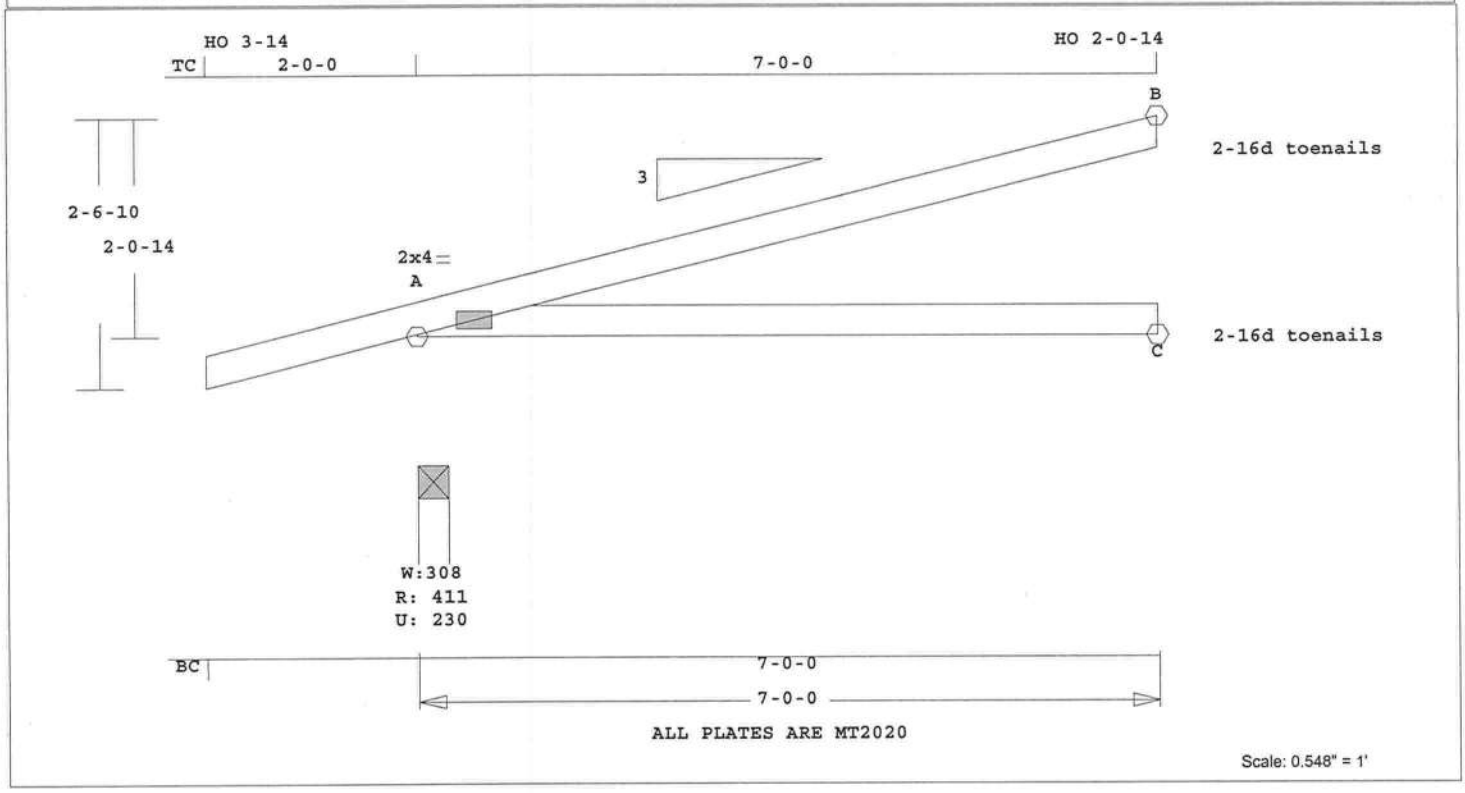

Robbins Engineering, Inc./Online Plus™ APPROX. TRUSS WEIGHT: 30.9 LBS

Online Plus -- Version 25.0.012
RUN DATE: 25-NOV-09

	CSI	-Size-	----Lumber----
TC	0.73	2x 4	SP-#2
BC	0.77	2x 4	SP-#2

Brace truss as follows:

	O.C.	From	To
TC	Cont.	0- 0- 0	7- 0- 0
BC	Cont.	0- 0- 0	7- 0- 0

psf-Ld	Dead	Live
TC	10.0	20.0
BC	10.0	0.0
TC+BC	20.0	20.0

Total 40.0 Spacing 24.0"
Lumber Duration Factor 1.25
Plate Duration Factor 1.25
TC Fb=1.15 Fc=1.10 Ft=1.10
BC Fb=1.10 Fc=1.10 Ft=1.10

Total Load Reactions (Lbs)

Jt	Down	Uplift	Horiz-
A	411	231 U	171 R
C	129	60 U	
B	185	99 U	43 R

Jt	Brg Size	Required
A	3.5"	1.5"
C	3.5"	1.5"
B	1.5"	1.5"

Plus 8 Wind Load Case(s)
Plus 1 UBC LL Load Case(s)
Plus 1 DL Load Case(s)

Membr	CSI	P Lbs	Axl-CSI-Bnd
----------Top Chords----------			
A -B	0.73	98 C	0.00 0.73
--------Bottom Chords---------			
A -C	0.77	0 T	0.00 0.77

TL Defl -0.20" in A -C L/388
LL Defl -0.08" in A -C L/957
Shear // Grain in A -B 0.35

Plates for each ply each face.
Plate - MT20 20 Ga, Gross Area
Plate - MT2H 20 Ga, Gross Area

Jt	Type	Plt Size	X	Y	JSI
A	MT20	2.0x 4.0	Ctr	Ctr	0.79

REVIEWED BY:
Robbins Engineering, Inc.
6904 Parke East Blvd.
Tampa, FL 33610

REFER TO ROBBINS ENG. GENERAL NOTES AND SYMBOLS SHEET FOR ADDITIONAL SPECIFICATIONS.

For proper installation of toe-nails, refer to the 2001 National Design Specification (NDS) for Wood Construction

NOTES:
Trusses Manufactured by:
Mayo Truss Co. Inc.
Analysis Conforms To:
FBC2007
TPI 2002
OH Loading
Soffit psf 2.0
This truss has been designed for 20.0 psf LL on the B.C. in areas where a rectangle
3- 6- 0 tall by
2- 0- 0 wide
will fit between the B.C. and any other member.
Design checked for 10 psf non-concurrent LL on BC.
Wind Loads - ANSI / ASCE 7-05
Truss is designed as Components and Claddings* for Exterior zone location.
Wind Speed: 120 mph
Mean Roof Height: 15-0
Exposure Category: B
Occupancy Factor : 1.00
Building Type: Enclosed
TC Dead Load: 5.0 psf
BC Dead Load: 5.0 psf
User-defined wind-exposed BC regions --From-- ---To---
0- 0- 0 7- 0- 0
Max comp. force 98 Lbs
Max tens. force 26 Lbs
Connector Plate Fabrication Tolerance = 20%
This truss is designed for a creep factor of 1.5 which is used to calculate total load deflection.

Joaquin Velez, FL Lic. #68182
Robbins Engineering
6904 Parke East Blvd
Tampa, FL, 33610
FL Cert.#5555

November 25,2009

Job	Mark	Quan	Type	Span	P1-H1	Left OH	Right OH	*Engineering*
JOHNSON-SPEC	*J9*	1	HHIP	70000	7	2- 0- 0	0	*T3555321*

SPEC LOT15 ROSEWOOD ESTATES

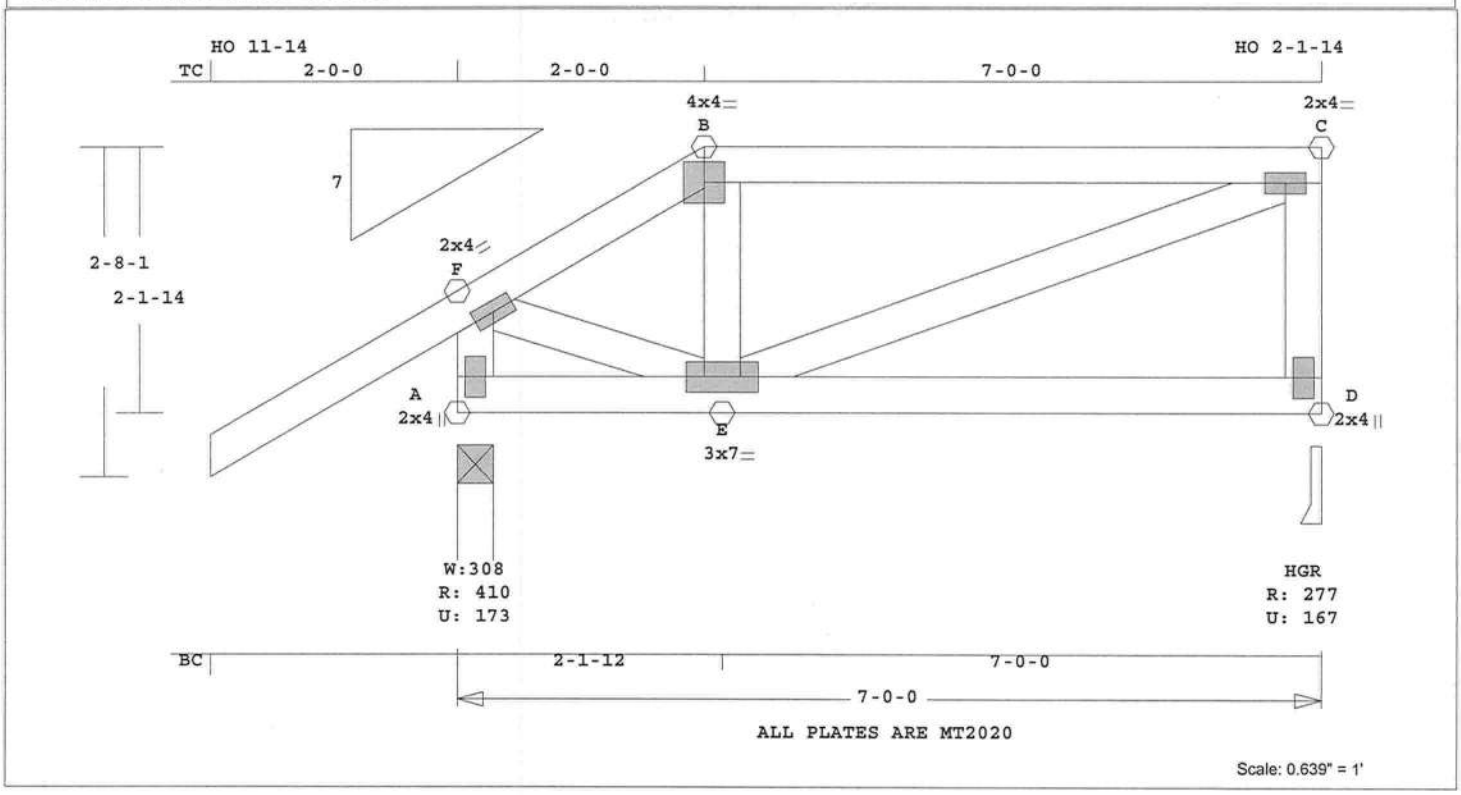

Robbins Engineering, Inc./Online Plus™ APPROX. TRUSS WEIGHT: 50.9 LBS

Online Plus -- Version 25.0.012
RUN DATE: 25-NOV-09

	CSI	-Size-	----Lumber----
TC	0.39	2x 4	SP-#2
BC	0.27	2x 4	SP-#2
WB	0.23	2x 4	SP-#2

Brace truss as follows:

	O.C.	From	To
TC	Cont.	0- 0- 0	7- 0- 0
BC	Cont.	0- 0- 0	7- 0- 0

psf-Ld	Dead	Live
TC	10.0	20.0
BC	10.0	0.0
TC+BC	20.0	20.0

Total 40.0 Spacing 24.0"
Lumber Duration Factor 1.25
Plate Duration Factor 1.25
TC Fb=1.15 Fc=1.10 Ft=1.10
BC Fb=1.10 Fc=1.10 Ft=1.10

Total Load Reactions (Lbs)

Jt	Down	Uplift	Horiz-
A	411	173 U	49 R
D	277	168 U	76 R

Jt	Brg Size	Required
A	3.5"	1.5"
D	3.5"	1.5"

Plus 9 Wind Load Case(s)
Plus 1 UBC LL Load Case(s)
Plus 1 DL Load Case(s)

Membr	CSI	P Lbs	Axl-CSI-Bnd
----------Top Chords----------			
F -B	0.20	674 T	0.08 0.12
B -C	0.39	637 T	0.08 0.31
--------Bottom Chords---------			
A -E	0.26	37 T	0.00 0.26
E -D	0.27	61 T	0.00 0.27
----------Webs----------			
A -F	0.10	711 T	WindLd
F -E	0.05	584 C	
E -B	0.02	257 C	
E -C	0.23	629 C	
D -C	0.06	451 T	WindLd

TL Defl -0.03" in E -D L/999
LL Defl -0.02" in E -D L/999
Shear // Grain in E -D 0.26

Plates for each ply each face.
Plate - MT20 20 Ga, Gross Area
Plate - MT2H 20 Ga, Gross Area

Jt	Type	Plt Size	X	Y	JSI
F	MT20	2.0x 4.0	Ctr	Ctr	0.78
B	MT20	4.0x 4.0	Ctr	Ctr	0.58
C	MT20	2.0x 4.0	Ctr	Ctr	0.51
A	MT20	2.0x 4.0	Ctr	Ctr	0.59
E	MT20	3.0x 7.0	Ctr	Ctr	0.39
D	MT20	2.0x 4.0	Ctr	Ctr	0.37

REVIEWED BY:
Robbins Engineering, Inc.
6904 Parke East Blvd.
Tampa, FL 33610

REFER TO ROBBINS ENG. GENERAL NOTES AND SYMBOLS SHEET FOR ADDITIONAL SPECIFICATIONS.

NOTES:
Trusses Manufactured by:
Mayo Truss Co. Inc.
Analysis Conforms To:
FBC2007
TPI 2002
OH Loading
Soffit psf 2.0
This truss has been designed for 20.0 psf LL on the B.C. in areas where a rectangle
3- 6- 0 tall by
2- 0- 0 wide
will fit between the B.C. and any other member.
Design checked for 10 psf non-concurrent LL on BC.
Wind Loads - ANSI / ASCE 7-05
Truss is designed as
Components and Claddings* for Exterior zone location.
Wind Speed: 120 mph
Mean Roof Height: 15-0
Exposure Category: B
Occupancy Factor : 1.00
Building Type: Enclosed
TC Dead Load: 5.0 psf
BC Dead Load: 5.0 psf
User-defined wind-exposed BC regions --From-- ---To---
0- 0- 0 7- 0- 0
Max comp. force 629 Lbs
Max tens. force 711 Lbs
Connector Plate Fabrication Tolerance = 20%
This truss is designed for a creep factor of 1.5 which is used to calculate total load deflection.

Joaquin Velez, FL Lic. #68182
Robbins Engineering
6904 Parke East Blvd
Tampa, FL, 33610
FL Cert.#5555

November 25,2009

Job	Mark	Quan	Type	Span	P1-H1	Left OH	Right OH	Engineering
JOHNSON-SPEC	A23GIR	1*2P	SP	510800	3	2- 0- 0	2- 0- 0	T3555322

SPEC LOT15 ROSEWOOD ESTATES

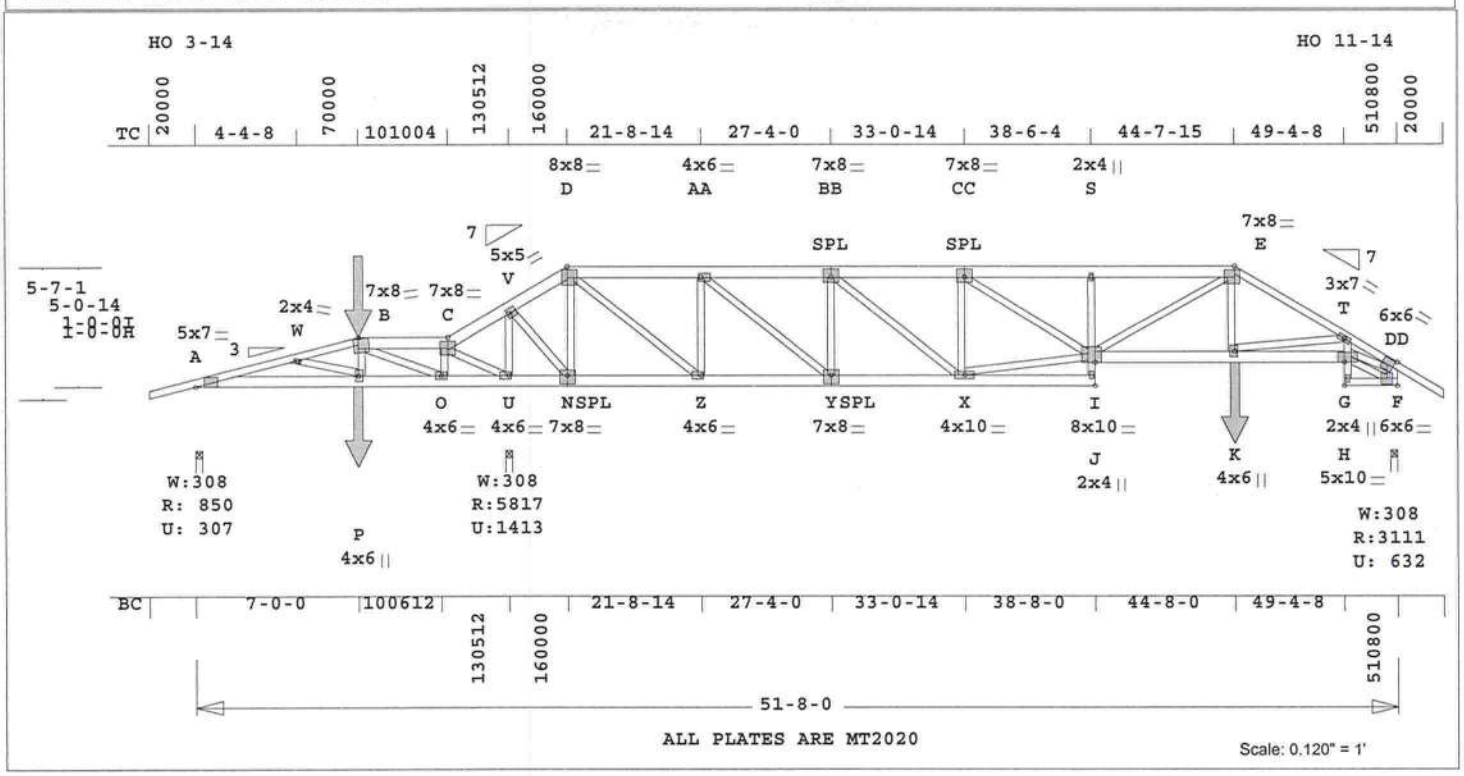

Robbins Engineering, Inc./Online Plus™ APPROX. TRUSS WEIGHT: 463.6 LBS

Online Plus -- Version 25.0.012
RUN DATE: 25-NOV-09
****
* 2-Ply Truss *
****

	CSI	-Size-	----Lumber----
TC	0.42	2x 6	SP-#2
--	0.37	2x 4	SP-#2
	A -B	E -DD	
BC	0.61	2x 6	SP-#2
--	0.03	2x 4	SP-#2
	G -F		
CW	0.48	2x 4	SP-#2
WB	0.54	2x 4	SP-#2
--	0.14	2x 6	SP-#2
	F -DD		

Brace truss as follows:

	O.C.	From	To
TC	Cont.	0- 0- 0	51- 8- 0
BC	Cont.	0- 0- 0	51- 8- 0

psf-Ld	Dead	Live
TC	10.0	20.0
BC	10.0	0.0
TC+BC	20.0	20.0

Total 40.0 Spacing 24.0"
Lumber Duration Factor 1.25
Plate Duration Factor 1.25
TC Fb=1.00 Fc=1.00 Ft=1.00
BC Fb=1.00 Fc=1.00 Ft=1.00

Total Load Reactions (Lbs)

Jt	Down	Uplift	Horiz-
A	851	307 U	100 R
U	5817	1414 U	
F	3111	632 U	130 R

Jt	Brg Size	Required
A	3.5"	1.5"
U	3.5"	3.1"
F	3.5"	1.8"

LC# 1 Standard Loading
Dur Fctrs - Lbr 1.25 Plt 1.25

plf -	Dead	Live*	From	To
TC V	20	40	0.0'	51.7'
BC V	20	0	0.0'	51.7'
BC V	50	50	0.0'	14.0'
TC V	25	50	16.0'	44.7'
BC V	25	0	16.0'	44.7'
TC V	115	115	7.0'	CL-LB
BC V	173	173	7.0'	CL-LB
BC V	275	275	44.7'	CL-LB

Plus 9 Wind Load Case(s)
Plus 1 UBC LL Load Case(s)
Plus 1 DL Load Case(s)

Membr	CSI	P Lbs	Axl-CSI-Bnd
----------Top Chords----------			
A -W	0.25	1148 C	0.00 0.25
W -B	0.23	915 C	0.00 0.23
B -C	0.39	2625 T	0.17 0.22
C -V	0.42	3700 T	0.25 0.17
V -D	0.18	514 T	0.01 0.17
D -AA	0.22	3083 C	0.00 0.22
AA-BB	0.22	5234 C	0.12 0.10
BB-CC	0.24	6122 C	0.14 0.10
CC-S	0.28	7309 C	0.17 0.11
S -E	0.30	7340 C	0.05 0.25
E -T	0.37	5832 C	0.06 0.31
T -DD	0.25	6776 C	0.09 0.16
--------Bottom Chords---------			
A -P	0.32	1150 T	0.06 0.26
P -O	0.28	809 T	0.02 0.26
O -U	0.26	2748 C	0.00 0.26
U -N	0.16	3163 C	0.10 0.06
N -Z	0.07	519 T	0.00 0.07
Z -Y	0.26	3083 T	0.20 0.06
Y -X	0.40	5234 T	0.35 0.05
X -J	0.09	366 T	0.02 0.07
I -K	0.48	5046 T	0.33 0.15
K -H	0.61	5841 T	0.39 0.22
G -F	0.03	432 T	0.03 0.00
----------Chord-Webs----------			
J -I	0.39	152 T	0.01 0.38
I -S	0.12	867 C	0.00 0.12
G -H	0.48	37 T	0.00 0.48
H -T	0.06	541 T	0.04 0.02
----------Webs----------			
W -P	0.04	491 T	
P -B	0.08	1023 T	
B -O	0.28	3212 C	
O -C	0.16	1792 T	
C -U	0.05	725 C	
U -V	0.45	5422 C	
V -N	0.39	4314 T	
N -D	0.31	3135 C	
D -Z	0.39	4297 T	
Z -AA	0.24	2447 C	
AA-Y	0.25	2788 T	
Y -BB	0.15	1519 C	
BB-X	0.10	1151 T	
X -CC	0.14	1496 C	
X -I	0.54	5847 T	
CC-I	0.13	1413 T	
I -E	0.24	2643 T	
K -E	0.09	1059 T	
K -T	0.08	771 C	
H -DD	0.54	5876 T	
H -F	0.03	496 C	
F -DD	0.14	2843 C	WindLd

TL Defl -0.47" in X -J L/961
LL Defl -0.19" in X -J L/999
Shear // Grain in G -H 0.28

Plates for each ply each face.
Plate - MT20 20 Ga, Gross Area
Plate - MT2H 20 Ga, Gross Area

Jt	Type	Plt Size	X	Y	JSI
A	MT20	5.0x 7.0	8.0	2.2	0.58
W	MT20	2.0x 4.0	Ctr	Ctr	0.14
B	MT20	7.0x 8.0	1.5	-4.0	0.91
C	MT20	7.0x 8.0	Ctr	Ctr	0.52
V	MT20	5.0x 5.0	-0.4	-0.3	0.85
D	MT20	8.0x 8.0	-0.5	-0.1	0.95
AA	MT20	4.0x 6.0	Ctr	Ctr	0.53
BB	MT20	7.0x 8.0	Ctr	0.8	0.43
CC	MT20	7.0x 8.0	Ctr	0.8	0.43
S	MT20	2.0x 4.0	Ctr	Ctr	0.28
E	MT20	7.0x 8.0	0.5	Ctr	0.67
T	MT20	3.0x 7.0	Ctr	Ctr	0.14
DD	MT20	6.0x 6.0	0.4	-0.3	1.00
P	MT20	4.0x 6.0	-1.2	0.2	0.14
O	MT20	4.0x 6.0	Ctr	Ctr	0.55
U	MT20	4.0x 6.0	Ctr	Ctr	0.59
N	MT20	7.0x 8.0	Ctr	-0.8	0.53
Z	MT20	4.0x 6.0	Ctr	Ctr	0.81
Y	MT20	7.0x 8.0	Ctr	-0.8	0.52
X	MT20	4.0x10.0	1.5	Ctr	0.95
J	MT20	2.0x 4.0	Ctr	Ctr	0.91
I	MT20	8.0x10.0	Ctr	1.2	0.54
K	MT20	4.0x 6.0	1.2	0.1	0.15
H	MT20	5.0x10.0	Ctr	0.7	0.67
G	MT20	2.0x 4.0	Ctr	Ctr	0.58
F	MT20	6.0x 6.0	Ctr	Ctr	0.21

REVIEWED BY:
Robbins Engineering, Inc.
6904 Parke East Blvd.
Tampa, FL 33610

REFER TO ROBBINS ENG. GENERAL NOTES AND SYMBOLS SHEET FOR ADDITIONAL SPECIFICATIONS.

NOTES:
Trusses Manufactured by:
Mayo Truss Co. Inc.
Analysis Conforms To:
FBC2007
TPI 2002
2 COMPLETE TRUSSES REQUIRED.
Fasten together in staggered pattern. (1/2" bolts -OR- SDS3 screws -OR- 10d nails as each layer is applied.)

	Rows	Nails	Screws	Bolts
		----Spacing (In)----		
TC	1	12	24	0
BC	1	12	24	0
WB	1	8	8	

Plus clusters of nails where shown.
OH Loading
Soffit psf 2.0
This truss has been designed for 20.0 psf LL on the B.C. in areas where a rectangle 3- 6- 0 tall by 2- 0- 0 wide will fit between the B.C. and any other member.
Design checked for 10 psf non-concurrent LL on BC.
Wind Loads - ANSI / ASCE 7-05
Truss is designed as Components and Claddings* for Exterior zone location.
Wind Speed: 120 mph
Mean Roof Height: 15-0
Exposure Category: B
Occupancy Factor : 1.00
Building Type: Enclosed
TC Dead Load: 5.0 psf
BC Dead Load: 5.0 psf
User-defined wind-exposed BC regions --From-- ---To---
0- 0- 0 13- 5-12
Max comp. force 7340 Lbs
Max tens. force 5876 Lbs
Connector Plate Fabrication Tolerance = 20%
This truss is designed for a creep factor of 1.5 which is used to calculate total load deflection.

Joaquin Velez, FL Lic. #68182
Robbins Engineering
6904 Parke East Blvd
Tampa, FL, 33610
FL Cert.#5555

November 25,2009

Job	Mark	Quan	Type	Span	P1-H1	Left OH	Right OH	Engineering
JOHNSON-SPEC	A24	1	HIPP	431108	7	0	2- 0- 0	T3555323

SPEC LOT15 ROSEWOOD ESTATES

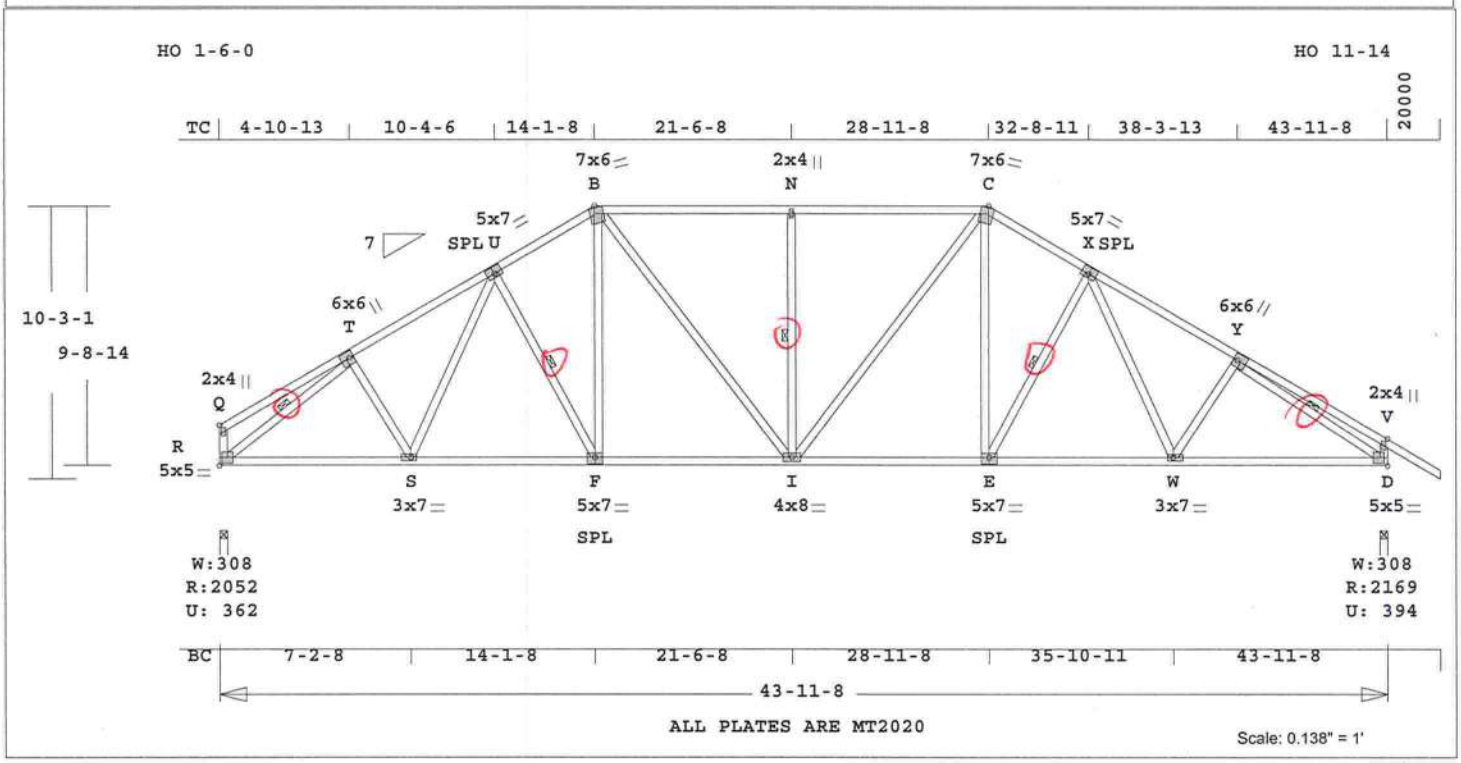

Robbins Engineering, Inc./Online Plus™ APPROX. TRUSS WEIGHT: 376.1 LBS

Online Plus -- Version 25.0.012
RUN DATE: 25-NOV-09

	CSI	-Size-	----Lumber----
TC	0.68	2x 4	SP-#2
BC	0.78	2x 4	SP-#2
WB	0.60	2x 4	SP-#2

Brace truss as follows:

	O.C.	From	To
TC	Cont.	0- 0- 0	43-11- 8
BC	Cont.	0- 0- 0	43-11- 8

One Continuous Lateral Brace
R -T U -F I -N E -X
Y -D
Attach CLB with (2)-10d nails at each web.

psf-Ld	Dead	Live
TC	10.0	20.0
BC	10.0	0.0
TC+BC	20.0	20.0
Total	40.0	Spacing 24.0"

Lumber Duration Factor 1.25
Plate Duration Factor 1.25
TC Fb=1.15 Fc=1.10 Ft=1.10
BC Fb=1.10 Fc=1.10 Ft=1.10

Total Load Reactions (Lbs)

Jt	Down	Uplift	Horiz-
R	2053	362 U	261 R
D	2170	394 U	248 R

Jt	Brg Size	Required
R	3.5"	2.4"
D	3.5"	2.6"

Plus 9 Wind Load Case(s)
Plus 1 UBC LL Load Case(s)
Plus 1 BC LL Load Case(s)
Plus 1 DL Load Case(s)

Membr	CSI	P Lbs		Axl-CSI-Bnd	
----------Top Chords----------					
Q -T	0.29	95	T	0.01	0.28
T -U	0.37	2682	C	0.14	0.23
U -B	0.38	2517	C	0.04	0.34
B -N	0.68	2507	C	0.04	0.64
N -C	0.68	2507	C	0.04	0.64
C -X	0.40	2588	C	0.04	0.36
X -Y	0.42	2936	C	0.15	0.27
Y -V	0.34	97	T	0.01	0.33
--------Bottom Chords---------					
R -S	0.62	2212	T	0.37	0.25
S -F	0.77	2292	T	0.38	0.39
F -I	0.75	2184	T	0.36	0.39
I -E	0.75	2245	T	0.37	0.38
E -W	0.78	2417	T	0.40	0.38
W -D	0.69	2542	T	0.42	0.27
----------Webs----------					
R -Q	0.01	144	C	WindLd	
R -T	0.48	2901	C		1 Br
T -S	0.03	210	T		
S -U	0.03	150	T		
U -F	0.09	344	C		1 Br
F -B	0.19	523	T		
B -I	0.47	528	T		
I -N	0.18	518	C		1 Br
I -C	0.39	427	T		
E -C	0.25	636	T		
E -X	0.11	419	C		1 Br
X -W	0.10	301	T		
W -Y	0.06	225	T		
Y -D	0.60	3134	C		1 Br
D -V	0.04	280	C	WindLd	

TL Defl -0.42" in I -E L/999
LL Defl -0.20" in I -E L/999
Shear // Grain in B -N 0.33

Plates for each ply each face.
Plate - MT20 20 Ga, Gross Area
Plate - MT2H 20 Ga, Gross Area

Jt	Type	Plt Size	X	Y	JSI
Q	MT20	2.0x 4.0	Ctr	Ctr	0.28
T	MT20	6.0x 6.0	-1.0	-0.6	0.74
U	MT20	5.0x 7.0	-0.3	0.5	0.43
B	MT20	7.0x 6.0	1.1	-4.2	0.53
N	MT20	2.0x 4.0	Ctr	Ctr	0.32
C	MT20	7.0x 6.0	-1.1	-4.2	0.53
X	MT20	5.0x 7.0	0.3	0.5	0.43
Y	MT20	6.0x 6.0	0.9	-0.5	0.81
V	MT20	2.0x 4.0	Ctr	Ctr	0.28
R	MT20	5.0x 5.0	Ctr	Ctr	0.90
S	MT20	3.0x 7.0	-0.9	Ctr	0.34
F	MT20	5.0x 7.0	Ctr	-0.5	0.47
I	MT20	4.0x 8.0	Ctr	Ctr	0.28
E	MT20	5.0x 7.0	Ctr	-0.5	0.49
W	MT20	3.0x 7.0	0.9	Ctr	0.34
D	MT20	5.0x 5.0	-0.5	Ctr	0.89

REVIEWED BY:
Robbins Engineering, Inc.
6904 Parke East Blvd.
Tampa, FL 33610

REFER TO ROBBINS ENG. GENERAL NOTES AND SYMBOLS SHEET FOR ADDITIONAL SPECIFICATIONS.

NOTES:
Trusses Manufactured by:
Mayo Truss Co. Inc.
Analysis Conforms To:
FBC2007
TPI 2002
OH Loading
Soffit psf 2.0
This truss has been designed for 20.0 psf LL on the B.C.
in areas where a rectangle
3- 6- 0 tall by
2- 0- 0 wide
will fit between the B.C. and any other member.
Design checked for 10 psf non-concurrent LL on BC.
Wind Loads - ANSI / ASCE 7-05
Truss is designed as
Components and Claddings* for Exterior zone location.
Wind Speed: 120 mph
Mean Roof Height: 15-0
Exposure Category: B
Occupancy Factor : 1.00
Building Type: Enclosed
TC Dead Load: 5.0 psf
BC Dead Load: 5.0 psf
Max comp. force 3134 Lbs
Max tens. force 2542 Lbs
Connector Plate Fabrication Tolerance = 20%
This truss is designed for a creep factor of 1.5 which is used to calculate total load deflection.

Joaquin Velez, FL Lic. #68182
Robbins Engineering
6904 Parke East Blvd
Tampa, FL, 33610
FL Cert.#5555

November 25,2009

Job	Mark	Quan	Type	Span	P1-H1	Left OH	Right OH	Engineering
JOHNSON-SPEC	A25	1	HIPP	431108	7	0	2- 0- 0	T3555324

SPEC LOT15 ROSEWOOD ESTATES

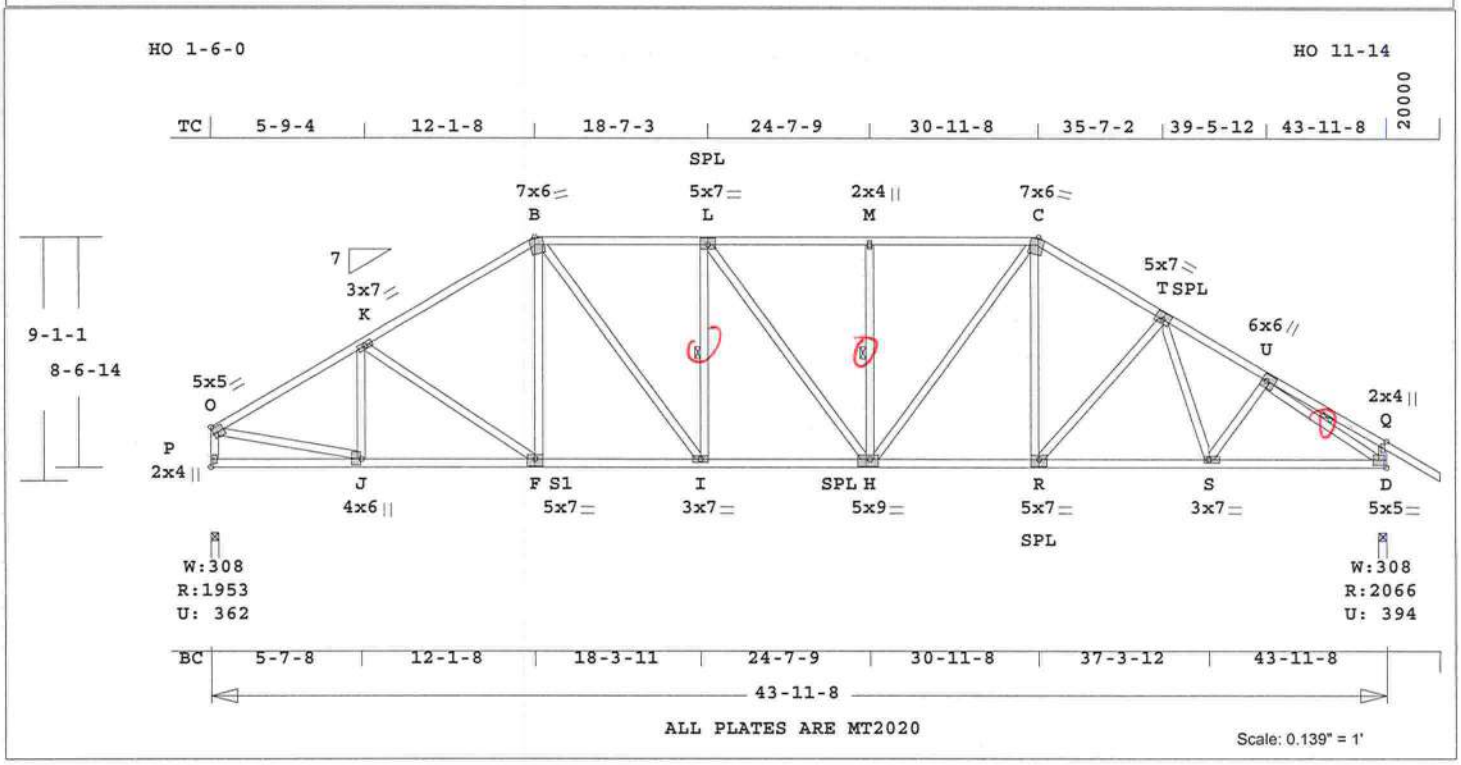

Robbins Engineering, Inc./Online Plus™ APPROX. TRUSS WEIGHT: 370.6 LBS

Online Plus -- Version 25.0.012
RUN DATE: 25-NOV-09

	CSI	-Size-	----Lumber----
TC	0.45	2x 4	SP-#2
BC	0.69	2x 4	SP-#2
WB	0.49	2x 4	SP-#2

Brace truss as follows:

	O.C.	From	To
TC	Cont.	0- 0- 0	43-11- 8
BC	Cont.	0- 0- 0	43-11- 8

One Continuous Lateral Brace
I -L H -M U -D
Attach CLB with (2)-10d nails at each web.

psf-Ld	Dead	Live
TC	10.0	20.0
BC	10.0	0.0
TC+BC	20.0	20.0

Total 40.0 Spacing 24.0"
Lumber Duration Factor 1.25
Plate Duration Factor 1.25
TC Fb=1.15 Fc=1.10 Ft=1.10
BC Fb=1.10 Fc=1.10 Ft=1.10

Total Load Reactions (Lbs)

Jt	Down	Uplift	Horiz-
P	1953	362 U	231 R
D	2067	394 U	217 R

Jt	Brg Size	Required
P	3.5"	2.3"
D	3.5"	2.4"

Plus 9 Wind Load Case(s)
Plus 1 UBC LL Load Case(s)
Plus 1 BC LL Load Case(s)
Plus 1 DL Load Case(s)

Membr	CSI	P Lbs	Axl-CSI-Bnd
----------Top Chords----------			
O -K	0.45	2491 C	0.13 0.32
K -B	0.45	2499 C	0.13 0.32
B -L	0.41	2646 C	0.09 0.32
L -M	0.42	2656 C	0.04 0.38
M -C	0.44	2656 C	0.09 0.35
C -T	0.34	2566 C	0.04 0.30
T -U	0.26	2758 C	0.15 0.11
U -Q	0.17	84 T	0.00 0.17
--------Bottom Chords---------			
P -J	0.21	211 T	0.00 0.21
J -S1	0.56	2168 T	0.36 0.20
S1-I	0.61	2153 T	0.36 0.25
I -H	0.69	2646 T	0.44 0.25
H -R	0.59	2223 T	0.37 0.22
R -S	0.58	2369 T	0.39 0.19
S -D	0.52	2314 T	0.38 0.14
----------Webs----------			
P -O	0.18	1904 C	WindLd
O -J	0.41	2225 T	
J -K	0.12	381 C	
K -S1	0.24	254 C	
S1-B	0.04	287 T	
B -I	0.49	820 T	
I -L	0.11	399 C	1 Br
L -H	0.11	94 T	
H -M	0.11	396 C	1 Br
H -C	0.45	720 T	
R -C	0.11	384 T	
R -T	0.27	335 C	
T -S	0.02	170 T	
S -U	0.02	154 T	
U -D	0.40	2903 C	1 Br
D -Q	0.03	257 T	WindLd

TL Defl -0.41" in H -R L/999
LL Defl -0.19" in H -R L/999
Shear // Grain in M -C 0.27

Plates for each ply each face.
Plate - MT20 20 Ga, Gross Area
Plate - MT2H 20 Ga, Gross Area

Jt	Type	Plt Size	X	Y	JSI
O	MT20	5.0x 5.0	Ctr	Ctr	0.90
K	MT20	3.0x 7.0	Ctr	Ctr	0.28
B	MT20	7.0x 6.0	1.1	-4.2	0.60
L	MT20	5.0x 7.0	Ctr	0.5	0.39
M	MT20	2.0x 4.0	Ctr	Ctr	0.31
C	MT20	7.0x 6.0	-1.1	-4.2	0.53
T	MT20	5.0x 7.0	0.3	0.5	0.47
U	MT20	6.0x 6.0	0.8	-0.5	0.75
Q	MT20	2.0x 4.0	Ctr	Ctr	0.28
P	MT20	2.0x 4.0	Ctr	Ctr	0.63
J	MT20	4.0x 6.0	-2.2	0.3	0.84
S1	MT20	5.0x 7.0	Ctr	-0.5	0.47
I	MT20	3.0x 7.0	Ctr	Ctr	0.47
H	MT20	5.0x 9.0	1.0	-0.5	0.57
R	MT20	5.0x 7.0	Ctr	-0.5	0.48
S	MT20	3.0x 7.0	1.2	Ctr	0.37
D	MT20	5.0x 5.0	Ctr	Ctr	0.93

REVIEWED BY:
Robbins Engineering, Inc.
6904 Parke East Blvd.
Tampa, FL 33610

REFER TO ROBBINS ENG. GENERAL NOTES AND SYMBOLS SHEET FOR ADDITIONAL SPECIFICATIONS.

NOTES:
Trusses Manufactured by:
Mayo Truss Co. Inc.
Analysis Conforms To:
FBC2007
TPI 2002
OH Loading
Soffit psf 2.0

This truss has been designed for 20.0 psf LL on the B.C. in areas where a rectangle
3- 6- 0 tall by
2- 0- 0 wide
will fit between the B.C. and any other member.
Design checked for 10 psf non-concurrent LL on BC.
Wind Loads - ANSI / ASCE 7-05
Truss is designed as Components and Claddings* for Exterior zone location.
Wind Speed: 120 mph
Mean Roof Height: 15-0
Exposure Category: B
Occupancy Factor : 1.00
Building Type: Enclosed
TC Dead Load: 5.0 psf
BC Dead Load: 5.0 psf
Max comp. force 2903 Lbs
Max tens. force 2646 Lbs
Connector Plate Fabrication Tolerance = 20%
This truss is designed for a creep factor of 1.5 which is used to calculate total load deflection.

Joaquin Velez, FL Lic. #68182
Robbins Engineering
6904 Parke East Blvd
Tampa, FL, 33610
FL Cert.#5555

November 25,2009

Job	Mark	Quan	Type	Span	P1-H1	Left OH	Right OH	Engineering
JOHNSON-SPEC	A26	1	HIPP	431108	7	0	2- 0- 0	T3555325

SPEC LOT15 ROSEWOOD ESTATES

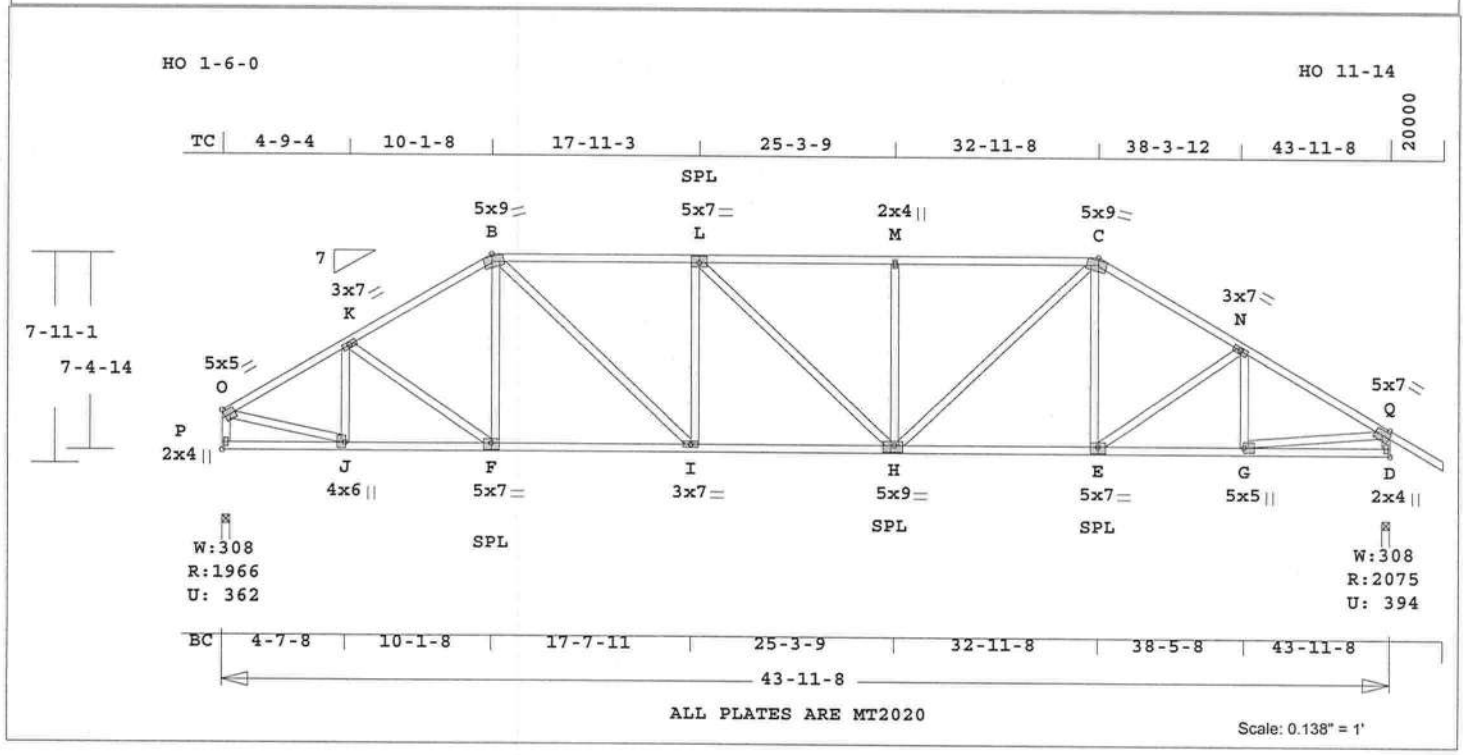

Robbins Engineering, Inc./Online Plus™ APPROX. TRUSS WEIGHT: 344.3 LBS

Online Plus -- Version 25.0.012
RUN DATE: 25-NOV-09

	CSI	-Size-	----Lumber----
TC	0.75	2x 4	SP-#2
BC	0.85	2x 4	SP-#2
WB	0.71	2x 4	SP-#2

Brace truss as follows:

	O.C.	From	To
TC	Cont.	0- 0- 0	43-11- 8
BC	Cont.	0- 0- 0	43-11- 8

psf-Ld	Dead	Live
TC	10.0	20.0
BC	10.0	0.0
TC+BC	20.0	20.0
Total	40.0	Spacing 24.0"

Lumber Duration Factor 1.25
Plate Duration Factor 1.25
TC Fb=1.15 Fc=1.10 Ft=1.10
BC Fb=1.10 Fc=1.10 Ft=1.10

Total Load Reactions (Lbs)

Jt	Down	Uplift	Horiz-
P	1966	362 U	200 R
D	2075	394 U	188 R

Jt	Brg Size	Required
P	3.5"	2.3"
D	3.5"	2.4"

Plus 9 Wind Load Case(s)
Plus 1 UBC LL Load Case(s)
Plus 1 BC LL Load Case(s)
Plus 1 DL Load Case(s)

Membr	CSI	P Lbs	Axl-CSI-Bnd	
----------Top Chords----------				
O -K	0.32	2395 C	0.12	0.20
K -B	0.35	2582 C	0.04	0.31
B -L	0.73	3057 C	0.17	0.56
L -M	0.61	3065 C	0.06	0.55
M -C	0.75	3065 C	0.17	0.58
C -N	0.38	2705 C	0.04	0.34
N -Q	0.42	2776 C	0.10	0.32
--------Bottom Chords---------				
P -J	0.12	180 T	0.00	0.12
J -F	0.59	2080 T	0.34	0.25
F -I	0.71	2233 T	0.37	0.34
I -H	0.85	3057 T	0.51	0.34
H -E	0.68	2337 T	0.39	0.29
E -G	0.65	2407 T	0.40	0.25
G -D	0.15	176 T	0.00	0.15
----------Webs----------				
P -O	0.18	1921 C	WindLd	
O -J	0.39	2162 T		
J -K	0.12	507 C		
K -F	0.08	188 T		
F -B	0.03	220 T		
B -I	0.71	1129 T		
I -L	0.37	479 C		
L -H	0.08	82 T		
H -M	0.37	476 C		
H -C	0.64	997 T		
E -C	0.05	319 T		
E -N	0.19	277 C		
G -N	0.06	249 C		
G -Q	0.44	2431 T		
D -Q	0.18	2022 C	WindLd	

TL Defl -0.51" in I -H L/999
LL Defl -0.24" in H -E L/999
Shear // Grain in B -L 0.32

Plates for each ply each face.
Plate - MT20 20 Ga, Gross Area
Plate - MT2H 20 Ga, Gross Area

Jt	Type	Plt Size	X	Y	JSI
O	MT20	5.0x 5.0	Ctr	Ctr	0.86
K	MT20	3.0x 7.0	Ctr	Ctr	0.28
B	MT20	5.0x 9.0	1.0	-3.6	0.70
L	MT20	5.0x 7.0	Ctr	0.5	0.39
M	MT20	2.0x 4.0	Ctr	Ctr	0.31
C	MT20	5.0x 9.0	-1.0	-3.6	0.62
N	MT20	3.0x 7.0	Ctr	Ctr	0.28
Q	MT20	5.0x 7.0	Ctr	Ctr	0.73
P	MT20	2.0x 4.0	Ctr	Ctr	0.63
J	MT20	4.0x 6.0	-1.7	0.3	0.90
F	MT20	5.0x 7.0	Ctr	-0.5	0.48
I	MT20	3.0x 7.0	Ctr	Ctr	0.54
H	MT20	5.0x 9.0	1.0	-0.5	0.66
E	MT20	5.0x 7.0	Ctr	-0.5	0.51
G	MT20	5.0x 5.0	2.2	0.1	0.84
D	MT20	2.0x 4.0	Ctr	Ctr	0.74

REVIEWED BY:
Robbins Engineering, Inc.
6904 Parke East Blvd.
Tampa, FL 33610

REFER TO ROBBINS ENG. GENERAL NOTES AND SYMBOLS SHEET FOR ADDITIONAL SPECIFICATIONS.

NOTES:
Trusses Manufactured by:
Mayo Truss Co. Inc.
Analysis Conforms To:
FBC2007
TPI 2002
OH Loading
Soffit psf 2.0
This truss has been designed for 20.0 psf LL on the B.C. in areas where a rectangle
3- 6- 0 tall by
2- 0- 0 wide
will fit between the B.C. and any other member.
Design checked for 10 psf non-concurrent LL on BC.
Wind Loads - ANSI / ASCE 7-05
Truss is designed as Components and Claddings* for Exterior zone location.
Wind Speed: 120 mph
Mean Roof Height: 15-0
Exposure Category: B
Occupancy Factor : 1.00
Building Type: Enclosed
TC Dead Load: 5.0 psf
BC Dead Load: 5.0 psf
Max comp. force 3065 Lbs
Max tens. force 3057 Lbs
Connector Plate Fabrication Tolerance = 20%
This truss is designed for a creep factor of 1.5 which is used to calculate total load deflection.

Joaquin Velez, FL Lic. #68182
Robbins Engineering
6904 Parke East Blvd
Tampa, FL, 33610
FL Cert.#5555

November 25,2009

Job	Mark	Quan	Type	Span	Pl-Hl	Left OH	Right OH	Engineering
JOHNSON-SPEC	A27	1	HIPP	441000	7	2- 0- 0	2- 0- 0	T3555326

SPEC LOT15 ROSEWOOD ESTATES

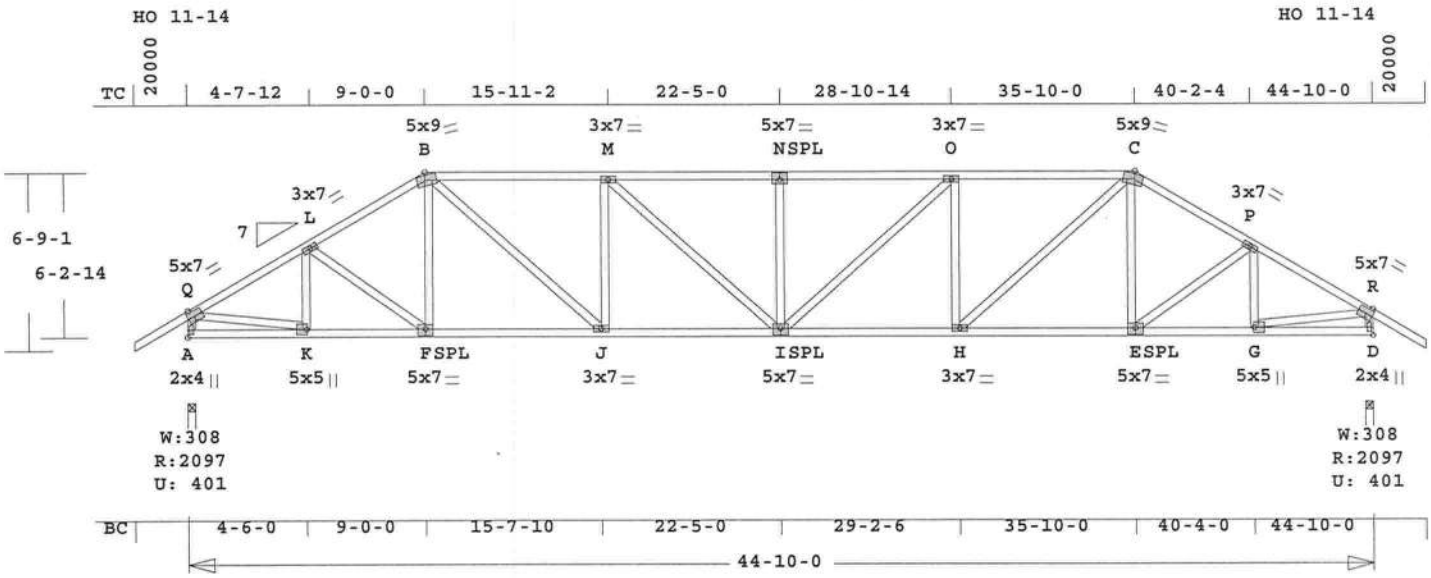

Robbins Engineering, Inc./Online Plus™ APPROX. TRUSS WEIGHT: 351.0 LBS

Online Plus -- Version 25.0.012
RUN DATE: 25-NOV-09

	CSI	-Size-	----Lumber----
TC	0.57	2x 4	SP-#2
BC	0.80	2x 4	SP-#2
WB	0.66	2x 4	SP-#2

Brace truss as follows:

	O.C.	From	To
TC	Cont.	0- 0- 0	44-10- 0
BC	Cont.	0- 0- 0	44-10- 0

psf-Ld	Dead	Live
TC	10.0	20.0
BC	10.0	0.0
TC+BC	20.0	20.0

Total 40.0 Spacing 24.0"
Lumber Duration Factor 1.25
Plate Duration Factor 1.25
TC Fb=1.15 Fc=1.10 Ft=1.10
BC Fb=1.10 Fc=1.10 Ft=1.10

Total Load Reactions (Lbs)

Jt	Down	Uplift	Horiz-
A	2097	402 U	161 R
D	2097	402 U	161 R

Jt	Brg Size	Required
A	3.5"	2.5"
D	3.5"	2.5"

Plus 9 Wind Load Case(s)
Plus 1 UBC LL Load Case(s)
Plus 1 BC LL Load Case(s)
Plus 1 DL Load Case(s)

Membr	CSI	P Lbs	Axl-CSI-Bnd		
----------Top Chords----------					
Q -L	0.28	2736	C	0.14	0.14
L -B	0.31	2809	C	0.05	0.26
B -M	0.57	3478	C	0.17	0.40
M -N	0.52	3780	C	0.09	0.43
N -O	0.52	3780	C	0.09	0.43
O -C	0.57	3478	C	0.17	0.40
C -P	0.31	2810	C	0.05	0.26
P -R	0.28	2737	C	0.14	0.14
--------Bottom Chords---------					
A -K	0.10	149	T	0.00	0.10
K -F	0.55	2369	T	0.39	0.16
F -J	0.62	2432	T	0.40	0.22
J -I	0.80	3478	T	0.58	0.22
I -H	0.80	3478	T	0.58	0.22
H -E	0.62	2432	T	0.40	0.22
E -G	0.55	2369	T	0.39	0.16
G -D	0.10	149	T	0.00	0.10
----------Webs----------					
A -Q	0.19	2051	C	WindLd	
Q -K	0.44	2404	T		
K -L	0.06	340	C		
L -F	0.07	153	C		
F -B	0.03	214	T		
B -J	0.66	1395	T		
J -M	0.37	694	C		
M -I	0.20	405	T		
I -N	0.20	385	C		
I -O	0.20	405	T		
H -O	0.37	694	C		
H -C	0.66	1395	T		
E -C	0.03	214	T		
E -P	0.07	153	C		
G -P	0.06	340	C		
G -R	0.44	2405	T		
D -R	0.19	2051	C	WindLd	

TL Defl -0.65" in I -H L/821
LL Defl -0.30" in I -H L/999
Shear // Grain in B -M 0.28

Plates for each ply each face.
Plate - MT20 20 Ga, Gross Area
Plate - MT2H 20 Ga, Gross Area

Jt	Type	Plt Size	X	Y	JSI
Q	MT20	5.0x 7.0	Ctr	Ctr	0.71
L	MT20	3.0x 7.0	Ctr	Ctr	0.28
B	MT20	5.0x 9.0	1.0	-3.6	0.86
M	MT20	3.0x 7.0	Ctr	Ctr	0.23
N	MT20	5.0x 7.0	Ctr	0.5	0.39
O	MT20	3.0x 7.0	Ctr	Ctr	0.23
C	MT20	5.0x 9.0	-1.0	-3.6	0.86
P	MT20	3.0x 7.0	Ctr	Ctr	0.28
R	MT20	5.0x 7.0	Ctr	Ctr	0.71
A	MT20	2.0x 4.0	Ctr	Ctr	0.76
K	MT20	5.0x 5.0	-2.2	0.1	0.83
F	MT20	5.0x 7.0	Ctr	-0.5	0.53
J	MT20	3.0x 7.0	Ctr	Ctr	0.65
I	MT20	5.0x 7.0	Ctr	-0.5	0.82
H	MT20	3.0x 7.0	Ctr	Ctr	0.65
E	MT20	5.0x 7.0	Ctr	-0.5	0.53
G	MT20	5.0x 5.0	2.2	0.1	0.83
D	MT20	2.0x 4.0	Ctr	Ctr	0.76

REVIEWED BY:
Robbins Engineering, Inc.
6904 Parke East Blvd.
Tampa, FL 33610

REFER TO ROBBINS ENG. GENERAL NOTES AND SYMBOLS SHEET FOR ADDITIONAL SPECIFICATIONS.

NOTES:
Trusses Manufactured by:
Mayo Truss Co. Inc.
Analysis Conforms To:
FBC2007
TPI 2002
OH Loading
Soffit psf 2.0
This truss has been designed for 20.0 psf LL on the B.C. in areas where a rectangle
3- 6- 0 tall by
2- 0- 0 wide
will fit between the B.C. and any other member.
Design checked for 10 psf non-concurrent LL on BC.
Wind Loads - ANSI / ASCE 7-05
Truss is designed as Components and Claddings* for Exterior zone location.
Wind Speed: 120 mph
Mean Roof Height: 15-0
Exposure Category: B
Occupancy Factor : 1.00
Building Type: Enclosed
TC Dead Load: 5.0 psf
BC Dead Load: 5.0 psf
Max comp. force 3780 Lbs
Max tens. force 3478 Lbs
Connector Plate Fabrication Tolerance = 20%
This truss is designed for a creep factor of 1.5 which is used to calculate total load deflection.

Joaquin Velez, FL Lic. #68182
Robbins Engineering
6904 Parke East Blvd
Tampa, FL, 33610
FL Cert.#5555

November 25,2009

Job	Mark	Quan	Type	Span	P1-H1	Left OH	Right OH	Engineering
JOHNSON-SPEC	J6	12	JCA2	10000	7	2- 0- 0	0	T3555327

SPEC LOT15 ROSEWOOD ESTATES

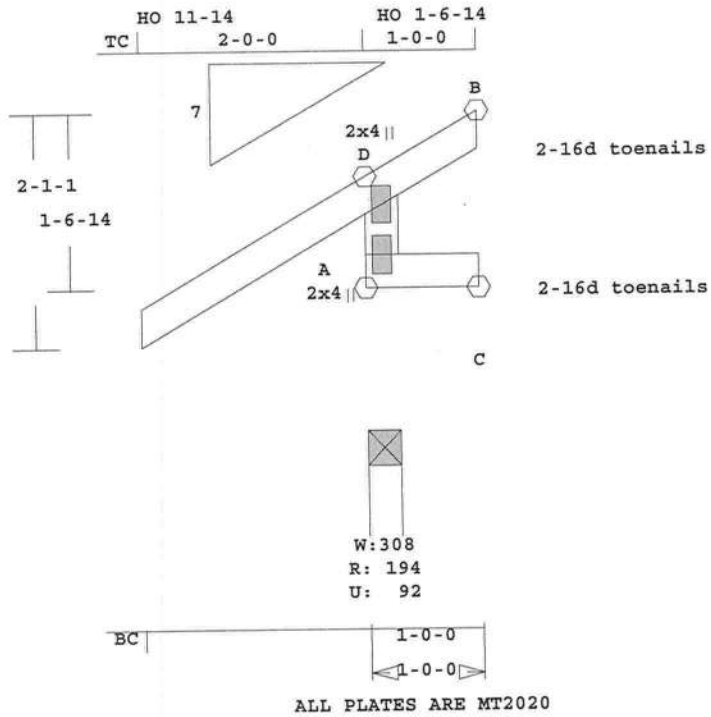

ALL PLATES ARE MT2020

Scale: 0.582" = 1'

Robbins Engineering, Inc./Online Plus™ APPROX. TRUSS WEIGHT: 9.8 LBS

Online Plus -- Version 25.0.012
RUN DATE: 25-NOV-09

	CSI	-Size-	----Lumber----
TC	0.02	2x 4	SP-#2
BC	0.02	2x 4	SP-#2
WB	0.05	2x 4	SP-#2

Brace truss as follows:

	O.C.	From	To
TC	Cont.	0- 0- 0	1- 0- 0
BC	Cont.	0- 0- 0	1- 0- 0

psf-Ld	Dead	Live
TC	10.0	20.0
BC	10.0	0.0
TC+BC	20.0	20.0

Total 40.0 Spacing 24.0"
Lumber Duration Factor 1.25
Plate Duration Factor 1.25
TC Fb=1.15 Fc=1.10 Ft=1.10
BC Fb=1.10 Fc=1.10 Ft=1.10

Total Load Reactions (Lbs)

Jt	Down	Uplift	Horiz-
A	195	92 U	76 R
C	21	9 U	
B	37	27 U	27 R

Jt	Brg Size	Required
A	3.5"	1.5"
C	3.5"	1.5"
B	1.5"	1.5"

Plus 8 Wind Load Case(s)
Plus 1 UBC LL Load Case(s)
Plus 1 DL Load Case(s)

Membr	CSI	P Lbs	Axl-CSI-Bnd
----------Top Chords----------			
D -B	0.02	29 T	0.00 0.02
--------Bottom Chords---------			
A -C	0.02	0 T	0.00 0.02
----------Webs----------			
A -D	0.05	176 C	0.02 0.03

TL Defl 0.00" in A -C L/999
LL Defl 0.00" in A -C L/999
Shear // Grain in D -B 0.04

Plates for each ply each face.
Plate - MT20 20 Ga, Gross Area
Plate - MT2H 20 Ga, Gross Area

Jt	Type	Plt Size	X	Y	JSI
D	MT20	2.0x 4.0	Ctr	Ctr	0.13
A	MT20	2.0x 4.0	Ctr	Ctr	0.13

REVIEWED BY:
Robbins Engineering, Inc.
6904 Parke East Blvd.
Tampa, FL 33610

REFER TO ROBBINS ENG. GENERAL NOTES AND SYMBOLS SHEET FOR ADDITIONAL SPECIFICATIONS.

For proper installation of toe-nails, refer to the 2001 National Design Specification (NDS) for Wood Construction

NOTES:
Trusses Manufactured by:
Mayo Truss Co. Inc.
Analysis Conforms To:
FBC2007
TPI 2002
OH Loading
Soffit psf 2.0
This truss has been designed for 20.0 psf LL on the B.C. in areas where a rectangle
3- 6- 0 tall by
2- 0- 0 wide
will fit between the B.C. and any other member.
Design checked for 10 psf non-concurrent LL on BC.
Wind Loads - ANSI / ASCE 7-05
Truss is designed as Components and Claddings* for Exterior zone location.
Wind Speed: 120 mph
Mean Roof Height: 15-0

Exposure Category: B
Occupancy Factor : 1.00
Building Type: Enclosed
TC Dead Load: 5.0 psf
BC Dead Load: 5.0 psf
Max comp. force 176 Lbs
Max tens. force 160 Lbs
Connector Plate Fabrication Tolerance = 20%
This truss is designed for a creep factor of 1.5 which is used to calculate total load deflection.

Joaquin Velez, FL Lic. #68182
Robbins Engineering
6904 Parke East Blvd
Tampa, FL, 33610
FL Cert.#5555

November 25,2009

Job	Mark	Quan	Type	Span	P1-H1	Left OH	Right OH	*Engineering*
JOHNSON-SPEC	*J5*	6	JCA2	30000	7	2- 0- 0	0	*T3555328*

SPEC LOT15 ROSEWOOD ESTATES

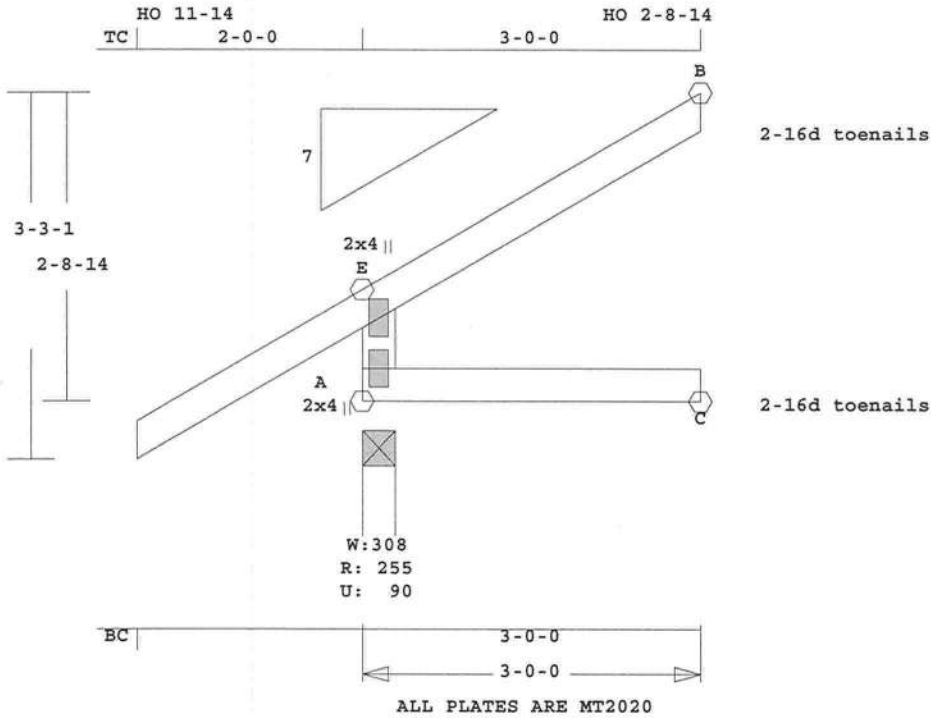

Scale: 0.583" = 1'

Robbins Engineering, Inc./Online Plus™ APPROX. TRUSS WEIGHT: 17.9 LBS

Online Plus -- Version 25.0.012
RUN DATE: 25-NOV-09

	CSI	-Size-	----Lumber----
TC	0.09	2x 4	SP-#2
BC	0.10	2x 4	SP-#2
WB	0.13	2x 4	SP-#2

Brace truss as follows:

	O.C.	From	To
TC	Cont.	0- 0- 0	3- 0- 0
BC	Cont.	0- 0- 0	3- 0- 0

psf-Ld	Dead	Live
TC	10.0	20.0
BC	10.0	0.0
TC+BC	20.0	20.0

Total 40.0 Spacing 24.0"
Lumber Duration Factor 1.25
Plate Duration Factor 1.25
TC Fb=1.15 Fc=1.10 Ft=1.10
BC Fb=1.10 Fc=1.10 Ft=1.10

Total Load Reactions (Lbs)

Jt	Down	Uplift	Horiz-
A	256	91 U	147 R
C	57	1 U	
B	110	60 U	56 R

Jt	Brg Size	Required
A	3.5"	1.5"
C	3.5"	1.5"
B	1.5"	1.5"

Plus 8 Wind Load Case(s)
Plus 1 UBC LL Load Case(s)
Plus 1 DL Load Case(s)

Membr	CSI	P Lbs	Axl-CSI-Bnd
----------Top Chords----------			
E -B	0.09	61 C	0.00 0.09
--------Bottom Chords---------			
A -C	0.10	0 T	0.00 0.10
----------Webs----------			
A -E	0.13	228 C	0.02 0.11

TL Defl 0.00" in A -C L/999
LL Defl 0.00" in A -C L/999
Shear // Grain in E -B 0.10

Plates for each ply each face.
Plate - MT20 20 Ga, Gross Area
Plate - MT2H 20 Ga, Gross Area

Jt	Type	Plt Size	X	Y	JSI
E	MT20	2.0x 4.0	Ctr	Ctr	0.12
A	MT20	2.0x 4.0	Ctr	Ctr	0.16

REVIEWED BY:
Robbins Engineering, Inc.
6904 Parke East Blvd.
Tampa, FL 33610

REFER TO ROBBINS ENG. GENERAL NOTES AND SYMBOLS SHEET FOR ADDITIONAL SPECIFICATIONS.

For proper installation of toe-nails, refer to the 2001 National Design Specification (NDS) for Wood Construction

NOTES:
Trusses Manufactured by:
Mayo Truss Co. Inc.
Analysis Conforms To:
FBC2007
TPI 2002
OH Loading
Soffit psf 2.0
This truss has been designed for 20.0 psf LL on the B.C. in areas where a rectangle
3- 6- 0 tall by
2- 0- 0 wide
will fit between the B.C. and any other member.
Design checked for 10 psf non-concurrent LL on BC.
Wind Loads - ANSI / ASCE 7-05
Truss is designed as Components and Claddings* for Exterior zone location.
Wind Speed: 120 mph
Mean Roof Height: 15-0
Exposure Category: B
Occupancy Factor : 1.00
Building Type: Enclosed
TC Dead Load: 5.0 psf
BC Dead Load: 5.0 psf
Max comp. force 228 Lbs
Max tens. force 192 Lbs
Connector Plate Fabrication Tolerance = 20%
This truss is designed for a creep factor of 1.5 which is used to calculate total load deflection.

Joaquin Velez, FL Lic. #68182
Robbins Engineering
6904 Parke East Blvd
Tampa, FL, 33610
FL Cert.#5555

November 25,2009

Job	Mark	Quan	Type	Span	P1-H1	Left OH	Right OH	Engineering
JOHNSON-SPEC	J4	6	JCA2	50000	7	2- 0- 0	0	T3555329

SPEC LOT15 ROSEWOOD ESTATES

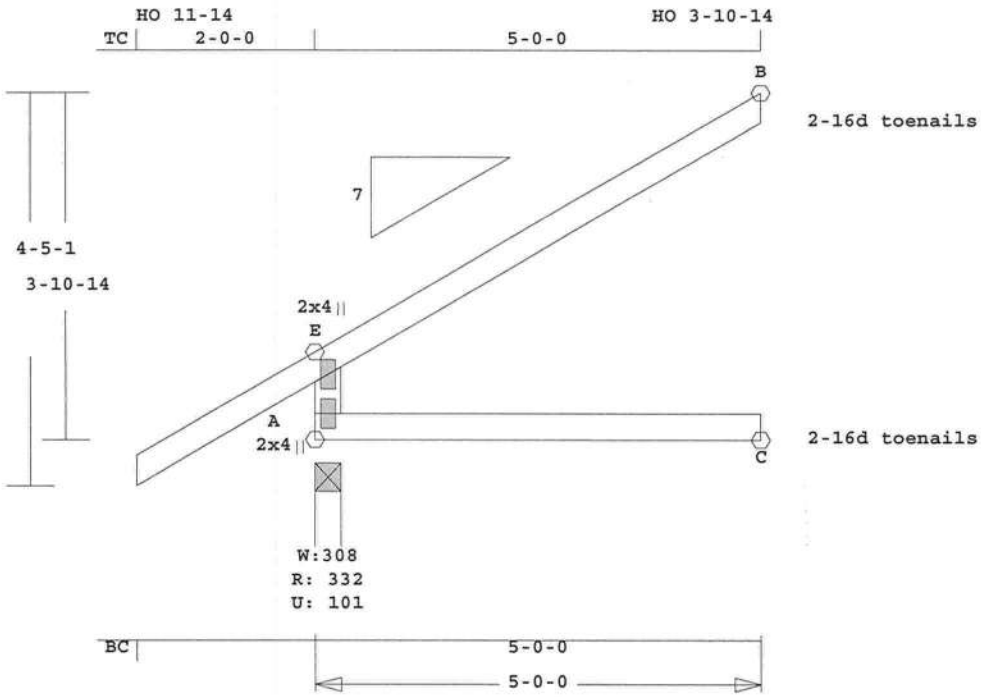

ALL PLATES ARE MT2020

Scale: 0.462" = 1'

Robbins Engineering, Inc./Online Plus™ APPROX. TRUSS WEIGHT: 26.1 LBS

Online Plus -- Version 25.0.012
RUN DATE: 25-NOV-09

	CSI	-Size-	----Lumber----
TC	0.27	2x 4	SP-#2
BC	0.24	2x 4	SP-#2
WB	0.29	2x 4	SP-#2

Brace truss as follows:

	O.C.	From	To
TC	Cont.	0- 0- 0	5- 0- 0
BC	Cont.	0- 0- 0	5- 0- 0

psf-Ld	Dead	Live
TC	10.0	20.0
BC	10.0	0.0
TC+BC	20.0	20.0

Total 40.0 Spacing 24.0"
Lumber Duration Factor 1.25
Plate Duration Factor 1.25
TC Fb=1.15 Fc=1.10 Ft=1.10
BC Fb=1.10 Fc=1.10 Ft=1.10

Total Load Reactions (Lbs)

Jt	Down	Uplift	Horiz-
A	333	102 U	218 R
C	96		
B	176	93 U	85 R

Jt	Brg Size	Required
A	3.5"	1.5"
C	3.5"	1.5"
B	1.5"	1.5"

Plus 8 Wind Load Case(s)
Plus 1 UBC LL Load Case(s)
Plus 1 DL Load Case(s)

Membr	CSI	P Lbs	Axl-CSI-Bnd
----------Top Chords----------			
E -B	0.27	97 C	0.01 0.26
--------Bottom Chords---------			
A -C	0.24	0 T	0.00 0.24
----------Webs----------			
A -E	0.29	291 C	0.03 0.26

TL Defl -0.05" in A -C L/999
LL Defl -0.02" in A -C L/999
Shear // Grain in E -B 0.17

Plates for each ply each face.
Plate - MT20 20 Ga, Gross Area
Plate - MT2H 20 Ga, Gross Area

Jt	Type	Plt Size	X	Y	JSI
E	MT20	2.0x 4.0	Ctr	Ctr	0.15
A	MT20	2.0x 4.0	Ctr	Ctr	0.19

REVIEWED BY:
Robbins Engineering, Inc.
6904 Parke East Blvd.
Tampa, FL 33610

REFER TO ROBBINS ENG. GENERAL NOTES AND SYMBOLS SHEET FOR ADDITIONAL SPECIFICATIONS.

For proper installation of toe-nails, refer to the 2001 National Design Specification (NDS) for Wood Construction

NOTES:
Trusses Manufactured by:
Mayo Truss Co. Inc.
Analysis Conforms To:
FBC2007
TPI 2002
OH Loading
Soffit psf 2.0
This truss has been designed for 20.0 psf LL on the B.C. in areas where a rectangle
3- 6- 0 tall by
2- 0- 0 wide
will fit between the B.C. and any other member.
Design checked for 10 psf non-concurrent LL on BC.
Wind Loads - ANSI / ASCE 7-05
Truss is designed as Components and Claddings* for Exterior zone location.
Wind Speed: 120 mph
Mean Roof Height: 15-0

Exposure Category: B
Occupancy Factor : 1.00
Building Type: Enclosed
TC Dead Load: 5.0 psf
BC Dead Load: 5.0 psf
Max comp. force 291 Lbs
Max tens. force 231 Lbs
Connector Plate Fabrication Tolerance = 20%
This truss is designed for a creep factor of 1.5 which is used to calculate total load deflection.

Joaquin Velez, FL Lic. #68182
Robbins Engineering
6904 Parke East Blvd
Tampa, FL, 33610
FL Cert.#5555

November 25,2009

Job	Mark	Quan	Type	Span	P1-H1	Left OH	Right OH	Engineering
JOHNSON-SPEC	CJ1	3	MONO.DD	91013	4.95	2- 9-15	0	T3555330

SPEC LOT15 ROSEWOOD ESTATES

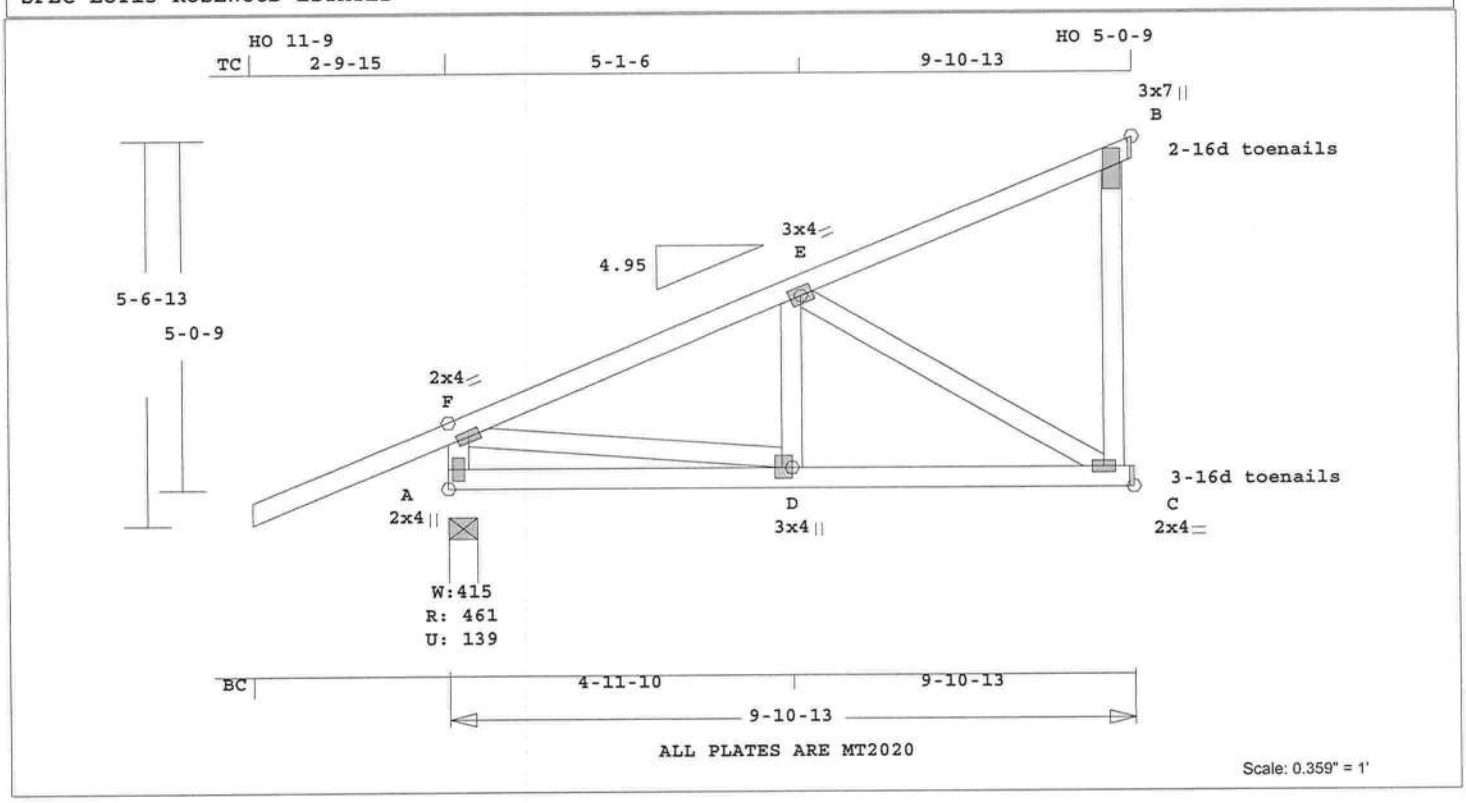

Robbins Engineering, Inc./Online Plus™ APPROX. TRUSS WEIGHT: 76.8 LBS

Online Plus -- Version 25.0.012
RUN DATE: 25-NOV-09

	CSI	-Size-	----Lumber----
TC	0.52	2x 4	SP-#2
BC	0.24	2x 4	SP-#2
WB	0.20	2x 4	SP-#2

Brace truss as follows:

	O.C.	From	To
TC	Cont.	0- 0- 0	9-10-13
BC	Cont.	0- 0- 0	9-10-13

psf-Ld	Dead	Live
TC	10.0	20.0
BC	10.0	0.0
TC+BC	20.0	20.0
Total	40.0	Spacing 24.0"

Lumber Duration Factor 1.25
Plate Duration Factor 1.25
TC Fb=1.00 Fc=1.00 Ft=1.00
BC Fb=1.00 Fc=1.00 Ft=1.00

Total Load Reactions (Lbs)

Jt	Down	Uplift	Horiz-
A	461	139 U	122 R
C	346	37 U	
B	245	108 U	201 R

Jt	Brg Size	Required
A	4.9"	1.5"
C	1.5"	1.5"
B	1.5"	1.5"

LC# 1 Girder Loading
Dur Fctrs - Lbr 1.25 Plt 1.25

plf -	Dead	Live*	From	To
TC V	20	40	0.0'	9.9'
BC V	20	0	0.0'	9.9'
TC V	-20	-40	0.0'	
	22	45		9.9'
BC V	-20	0	0.0'	
	22	0		9.9'

Plus 7 Wind Load Case(s)
Plus 1 UBC LL Load Case(s)
Plus 1 DL Load Case(s)

Membr	CSI	P Lbs	Axl-CSI-Bnd
----------Top Chords----------			
F -E	0.39	430 C	0.02 0.37
E -B	0.52	129 T	0.00 0.52
--------Bottom Chords---------			
A -D	0.18	101 C	0.00 0.18
D -C	0.24	416 T	0.04 0.20
----------Webs----------			
A -F	0.06	471 T	WindLd
F -D	0.07	420 T	
D -E	0.03	196 T	
E -C	0.20	481 C	
C -B	0.12	0 T	WindLd

TL Defl -0.05" in D -C L/999
LL Defl -0.02" in D -C L/999
Shear // Grain in E -B 0.34

Plates for each ply each face.
Plate - MT20 20 Ga, Gross Area
Plate - MT2H 20 Ga, Gross Area

Jt	Type	Plt Size	X	Y	JSI
F	MT20	2.0x 4.0	Ctr	Ctr	0.50
E	MT20	3.0x 4.0	Ctr	Ctr	0.25
B	MT20	3.0x 7.0	Ctr	-0.3	0.05
A	MT20	2.0x 4.0	Ctr	Ctr	0.39
D	MT20	3.0x 4.0	-1.5	0.1	0.43
C	MT20	2.0x 4.0	Ctr	Ctr	0.48

REVIEWED BY:
Robbins Engineering, Inc.
6904 Parke East Blvd.
Tampa, FL 33610

REFER TO ROBBINS ENG. GENERAL NOTES AND SYMBOLS SHEET FOR ADDITIONAL SPECIFICATIONS.

For proper installation of toe-nails, refer to the 2001 National Design Specification (NDS) for Wood Construction

NOTES:
Trusses Manufactured by:
Mayo Truss Co. Inc.
Analysis Conforms To:
FBC2007
TPI 2002
Girder King Jack
Loading TC and BC
Setback 7- 0- 0
OH Loading
Soffit psf 2.0
Design checked for 10 psf non-concurrent LL on BC.

Use properly rated hangers for loads framing into girder truss.
Max gap between edge of brg and end vertical or diagonal web is 1/2".
Wind Loads - ANSI / ASCE 7-05
Truss is designed as Components and Claddings* for Exterior zone location.
Wind Speed: 120 mph
Mean Roof Height: 15-0
Exposure Category: B
Occupancy Factor : 1.00
Building Type: Enclosed
TC Dead Load: 5.0 psf
BC Dead Load: 5.0 psf
Max comp. force 481 Lbs
Max tens. force 471 Lbs
Connector Plate Fabrication Tolerance = 20%
This truss is designed for a creep factor of 1.5 which is used to calculate total load deflection.

Joaquin Velez, FL Lic. #68182
Robbins Engineering
6904 Parke East Blvd
Tampa, FL, 33610
FL Cert.#5555

November 25,2009

Job	Mark	Quan	Type	Span	P1-H1	Left OH	Right OH	Engineering
JOHNSON-SPEC	E2	1	HIPP	121000	7	0	2- 0- 0	T3555331

SPEC LOT15 ROSEWOOD ESTATES

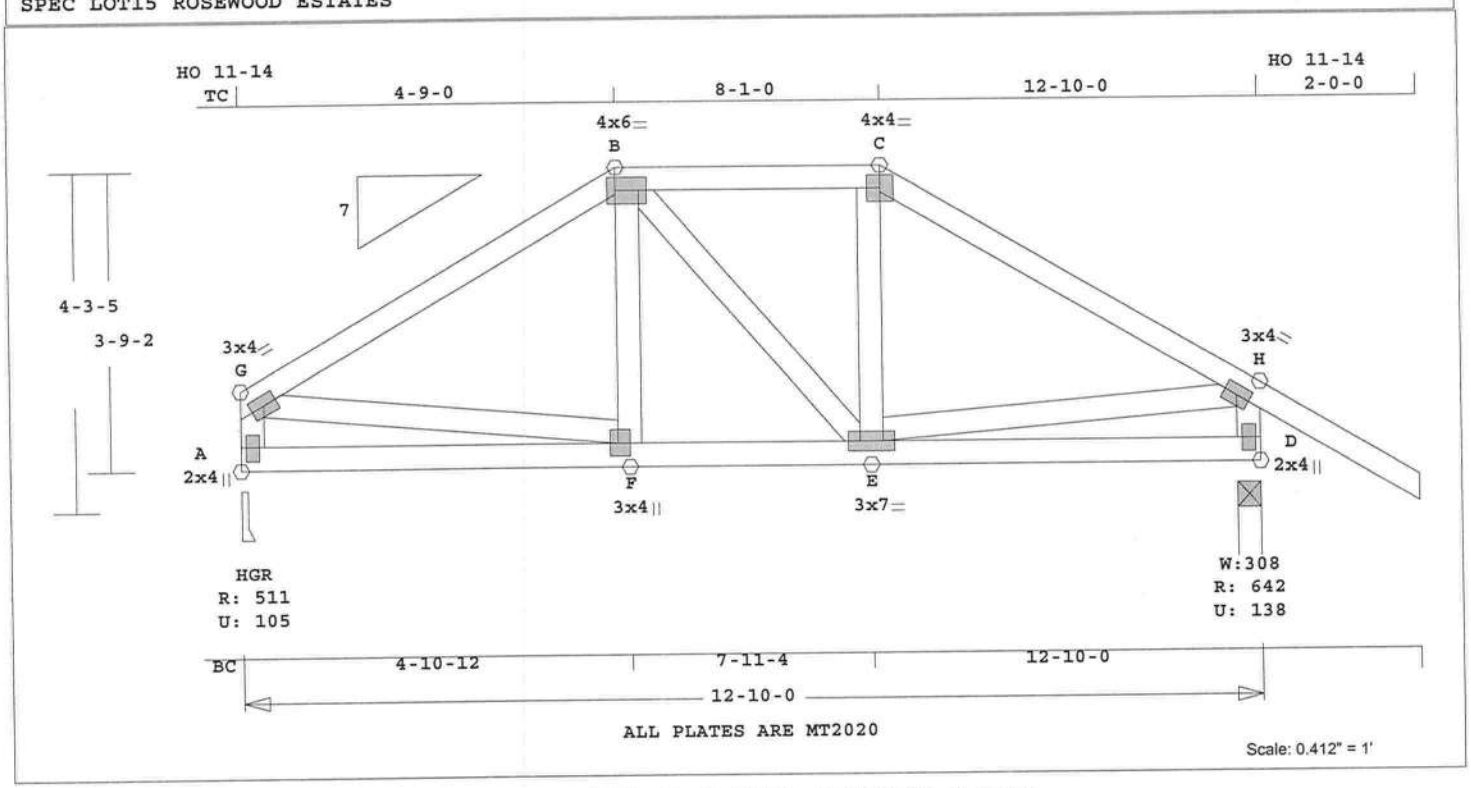

Robbins Engineering, Inc./Online Plus™ APPROX. TRUSS WEIGHT: 95.2 LBS

Online Plus -- Version 25.0.012
RUN DATE: 25-NOV-09

	CSI	-Size-	----Lumber----
TC	0.23	2x 4	SP-#2
BC	0.14	2x 4	SP-#2
WB	0.08	2x 4	SP-#2

Brace truss as follows:

	O.C.	From	To
TC	Cont.	0- 0- 0	12-10- 0
BC	Cont.	0- 0- 0	12-10- 0

psf-Ld	Dead	Live
TC	10.0	20.0
BC	10.0	0.0
TC+BC	20.0	20.0

Total 40.0 Spacing 24.0"
Lumber Duration Factor 1.25
Plate Duration Factor 1.25
TC Fb=1.15 Fc=1.10 Ft=1.10
BC Fb=1.10 Fc=1.10 Ft=1.10

Total Load Reactions (Lbs)

Jt	Down	Uplift	Horiz-
A	512	105 U	92 R
D	643	138 U	92 R

Jt	Brg Size	Required
A	3.5"	1.5"
D	3.5"	1.5"

Plus 9 Wind Load Case(s)
Plus 1 UBC LL Load Case(s)
Plus 1 DL Load Case(s)

Membr	CSI	P Lbs	Axl-CSI-Bnd
----------Top Chords----------			
G -B	0.23	517 C	0.00 0.23
B -C	0.11	447 C	0.04 0.07
C -H	0.22	515 C	0.00 0.22
--------Bottom Chords---------			
A -F	0.12	80 T	0.00 0.12
F -E	0.14	451 T	0.04 0.10
E -D	0.12	80 T	0.00 0.12
----------Webs----------			
A -G	0.04	468 C	WindLd
G -F	0.08	457 T	
F -B	0.01	114 T	
B -E	0.01	59 T	
E -C	0.01	113 T	
E -H	0.08	453 T	
D -H	0.05	598 C	WindLd

TL Defl -0.04" in A -F L/999
LL Defl -0.02" in A -F L/999
Shear // Grain in G -B 0.16

Plates for each ply each face.
Plate - MT20 20 Ga, Gross Area
Plate - MT2H 20 Ga, Gross Area

Jt	Type	Plt Size	X	Y	JSI
G	MT20	3.0x 4.0	Ctr	Ctr	0.32
B	MT20	4.0x 6.0	Ctr	Ctr	0.58
C	MT20	4.0x 4.0	Ctr	Ctr	0.58
H	MT20	3.0x 4.0	Ctr	Ctr	0.41
A	MT20	2.0x 4.0	Ctr	Ctr	0.22
F	MT20	3.0x 4.0-1.5	0.1		0.46
E	MT20	3.0x 7.0	Ctr	Ctr	0.38
D	MT20	2.0x 4.0	Ctr	Ctr	0.34

REVIEWED BY:
Robbins Engineering, Inc.
6904 Parke East Blvd.
Tampa, FL 33610

REFER TO ROBBINS ENG. GENERAL NOTES AND SYMBOLS SHEET FOR ADDITIONAL SPECIFICATIONS.

NOTES:
Trusses Manufactured by:
Mayo Truss Co. Inc.
Analysis Conforms To:
FBC2007
TPI 2002
OH Loading
Soffit psf 2.0
This truss has been designed for 20.0 psf LL on the B.C. in areas where a rectangle 3- 6- 0 tall by 2- 0- 0 wide will fit between the B.C. and any other member.
Design checked for 10 psf non-concurrent LL on BC.
Wind Loads - ANSI / ASCE 7-05
Truss is designed as Components and Claddings* for Exterior zone location.
Wind Speed: 120 mph
Mean Roof Height: 15-0
Exposure Category: B
Occupancy Factor : 1.00
Building Type: Enclosed
TC Dead Load: 5.0 psf
BC Dead Load: 5.0 psf
Max comp. force 598 Lbs
Max tens. force 457 Lbs
Connector Plate Fabrication Tolerance = 20%
This truss is designed for a creep factor of 1.5 which is used to calculate total load deflection.

Joaquin Velez, FL Lic. #68182
Robbins Engineering
6904 Parke East Blvd
Tampa, FL, 33610
FL Cert.#5555

November 25,2009

Job	Mark	Quan	Type	Span	P1-H1	Left OH	Right OH	Engineering
JOHNSON-SPEC	E1	2	TR	121000	7	0	2- 0- 0	T3555332

SPEC LOT15 ROSEWOOD ESTATES

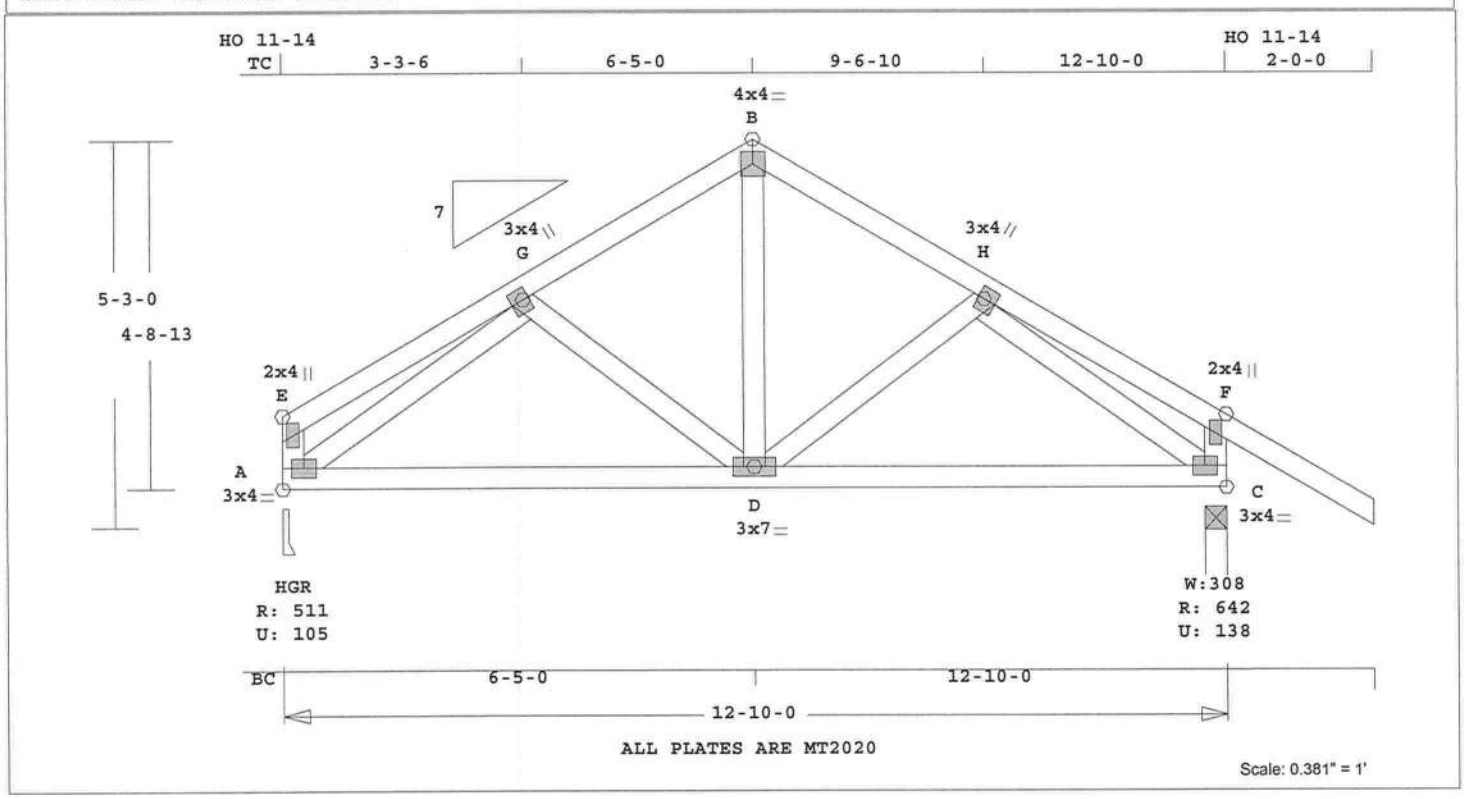

Robbins Engineering, Inc./Online Plus™ APPROX. TRUSS WEIGHT: 95.4 LBS

Online Plus -- Version 25.0.012
RUN DATE: 25-NOV-09

	CSI	-Size-	----Lumber----
TC	0.11	2x 4	SP-#2
BC	0.34	2x 4	SP-#2
WB	0.14	2x 4	SP-#2

Brace truss as follows:

	O.C.	From	To
TC	Cont.	0- 0- 0	12-10- 0
BC	Cont.	0- 0- 0	12-10- 0

psf-Ld	Dead	Live
TC	10.0	20.0
BC	10.0	0.0
TC+BC	20.0	20.0

Total 40.0 Spacing 24.0"
Lumber Duration Factor 1.25
Plate Duration Factor 1.25
TC Fb=1.15 Fc=1.10 Ft=1.10
BC Fb=1.10 Fc=1.10 Ft=1.10

Total Load Reactions (Lbs)

Jt	Down	Uplift	Horiz-
A	512	105 U	113 R
C	643	138 U	113 R

Jt	Brg Size	Required
A	3.5"	1.5"
C	3.5"	1.5"

Plus 9 Wind Load Case(s)
Plus 1 UBC LL Load Case(s)
Plus 1 DL Load Case(s)

Membr	CSI	P Lbs	Axl-CSI-Bnd
----------Top Chords---------			
E -G	0.09	68 T	0.00 0.09
G -B	0.11	447 C	0.03 0.08
B -H	0.11	446 C	0.03 0.08
H -F	0.09	72 T	0.00 0.09
--------Bottom Chords---------			
A -D	0.34	454 T	0.04 0.30
D -C	0.34	449 T	0.04 0.30
----------Webs----------			
A -E	0.01	104 C	WindLd
A -G	0.14	588 C	
G -D	0.03	167 T	
D -B	0.04	301 T	
D -H	0.03	160 T	
H -C	0.14	582 C	
C -F	0.03	237 T	WindLd

TL Defl -0.08" in A -D L/999
LL Defl -0.04" in A -D L/999
Shear // Grain in A -D 0.16

Plates for each ply each face.
Plate - MT20 20 Ga, Gross Area
Plate - MT2H 20 Ga, Gross Area

Jt	Type	Plt Size	X	Y	JSI
E	MT20	2.0x 4.0	Ctr	Ctr	0.13
G	MT20	3.0x 4.0	-0.4	-0.3	0.80
B	MT20	4.0x 4.0	Ctr	Ctr	0.42
H	MT20	3.0x 4.0	0.4	-0.3	0.79
F	MT20	2.0x 4.0	Ctr	Ctr	0.15
A	MT20	3.0x 4.0	Ctr	Ctr	0.38
D	MT20	3.0x 7.0	Ctr	Ctr	0.19
C	MT20	3.0x 4.0	Ctr	Ctr	0.38

REVIEWED BY:
Robbins Engineering, Inc.
6904 Parke East Blvd.
Tampa, FL 33610

REFER TO ROBBINS ENG. GENERAL NOTES AND SYMBOLS SHEET FOR ADDITIONAL SPECIFICATIONS.

NOTES:
Trusses Manufactured by:
Mayo Truss Co. Inc.
Analysis Conforms To:
FBC2007
TPI 2002
OH Loading
Soffit psf 2.0
This truss has been designed for 20.0 psf LL on the B.C. in areas where a rectangle
3- 6- 0 tall by
2- 0- 0 wide
will fit between the B.C. and any other member.
Design checked for 10 psf non-concurrent LL on BC.
Wind Loads - ANSI / ASCE 7-05
Truss is designed as Components and Claddings* for Exterior zone location.
Wind Speed: 120 mph
Mean Roof Height: 15-0
Exposure Category: B
Occupancy Factor : 1.00
Building Type: Enclosed
TC Dead Load: 5.0 psf
BC Dead Load: 5.0 psf
Max comp. force 588 Lbs
Max tens. force 454 Lbs
Connector Plate Fabrication Tolerance = 20%
This truss is designed for a creep factor of 1.5 which is used to calculate total load deflection.

Joaquin Velez, FL Lic. #68182
Robbins Engineering
6904 Parke East Blvd
Tampa, FL, 33610
FL Cert.#5555

November 25,2009

Job	Mark	Quan	Type	Span	P1-H1	Left OH	Right OH	Engineering
JOHNSON-SPEC	M1GIR	1*2P	JCA2	70000	7	0	0	T3555333

SPEC LOT15 ROSEWOOD ESTATES

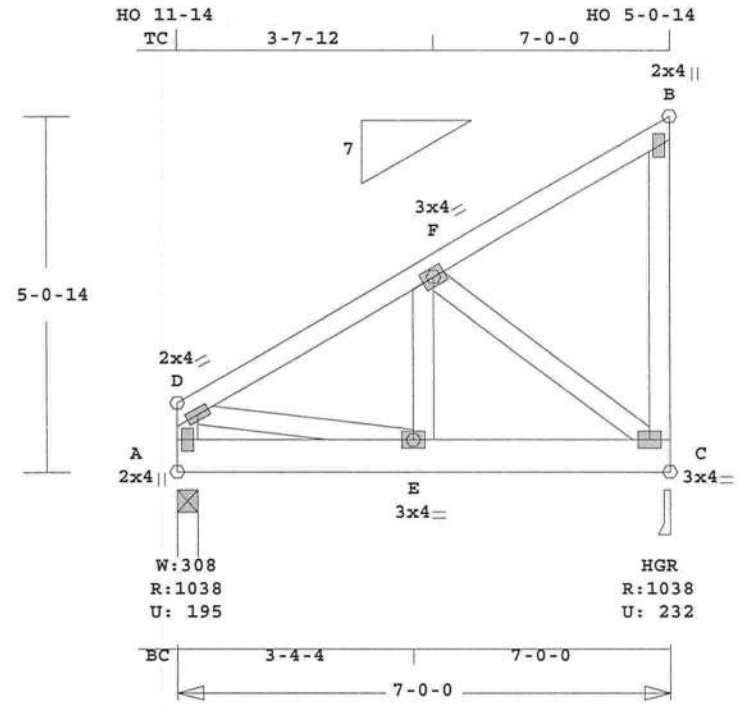

ALL PLATES ARE MT2020

Scale: 0.364" = 1'

Robbins Engineering, Inc./Online Plus™ APPROX. TRUSS WEIGHT: 61.7 LBS

Online Plus -- Version 25.0.012
RUN DATE: 25-NOV-09
****
* 2-Ply Truss *
****

	CSI	-Size-	----Lumber----
TC	0.10	2x 4	SP-#2
BC	0.16	2x 6	SP-#2
WB	0.08	2x 4	SP-#2

Brace truss as follows:

	O.C.	From	To
TC	Cont.	0- 0- 0	7- 0- 0
BC	Cont.	0- 0- 0	7- 0- 0

psf-Ld	Dead	Live
TC	10.0	20.0
BC	10.0	0.0
TC+BC	20.0	20.0

Total 40.0 Spacing 24.0"
Lumber Duration Factor 1.25
Plate Duration Factor 1.25
TC Fb=1.00 Fc=1.00 Ft=1.00
BC Fb=1.00 Fc=1.00 Ft=1.00

Total Load Reactions (Lbs)

Jt	Down	Uplift	Horiz-
A	1038	196 U	108 R
C	1038	232 U	193 R

Jt	Brg Size	Required
A	3.5"	1.5"
C	3.5"	1.5"

LC# 1 Girder Loading
Dur Fctrs - Lbr 1.25 Plt 1.25

plf -	Dead	Live*	From	To
TC V	20	40	0.0'	7.0'
BC V	128	108	0.0'	7.0'

Plus 8 Wind Load Case(s)
Plus 1 UBC LL Load Case(s)
Plus 1 DL Load Case(s)

Membr	CSI	P Lbs	Axl-CSI-Bnd
----------Top Chords----------			
D -F	0.10	855 C	0.03 0.07
F -B	0.07	103 T	0.00 0.07
--------Bottom Chords---------			
A -E	0.11	97 T	0.00 0.11
E -C	0.16	748 T	0.05 0.11
----------Webs----------			
A -D	0.05	675 C	WindLd
D -E	0.07	763 T	
E -F	0.07	780 T	
F -C	0.08	951 C	
C -B	0.06	88 C	WindLd

TL Defl -0.01" in A -E L/999
LL Defl 0.00" in A -E L/999
Shear // Grain in A -E 0.19

Plates for each ply each face.
Plate - MT20 20 Ga, Gross Area
Plate - MT2H 20 Ga, Gross Area

Jt	Type	Plt Size	X	Y	JSI
D	MT20	2.0x 4.0	Ctr	Ctr	0.38
F	MT20	3.0x 4.0	Ctr	Ctr	0.40
B	MT20	2.0x 4.0	Ctr	Ctr	0.13
A	MT20	2.0x 4.0	Ctr	Ctr	0.15
E	MT20	3.0x 4.0	Ctr	Ctr	0.34
C	MT20	3.0x 4.0	Ctr	Ctr	0.30

REVIEWED BY:
Robbins Engineering, Inc.
6904 Parke East Blvd.
Tampa, FL 33610

REFER TO ROBBINS ENG. GENERAL NOTES AND SYMBOLS SHEET FOR ADDITIONAL SPECIFICATIONS.

NOTES:
Trusses Manufactured by:
Mayo Truss Co. Inc.
Analysis Conforms To:
FBC2007
TPI 2002
Girder Common
Loading BC
Span 12-10- 0
2 COMPLETE TRUSSES REQUIRED.
Fasten together in staggered pattern. (1/2" bolts -OR- SDS3 screws -OR- 10d nails as each layer is applied.)

	Rows	Nails	Screws	Bolts
		----Spacing (In)----		
TC	1	12	24	0
BC	2	12	24	0
WB	1	8	8	

Design checked for 10 psf non-concurrent LL on BC.
Use properly rated hangers for loads framing into girder truss.
Wind Loads - ANSI / ASCE 7-05
Truss is designed as Components and Claddings* for Exterior zone location.
Wind Speed: 120 mph
Mean Roof Height: 15-0
Exposure Category: B
Occupancy Factor : 1.00
Building Type: Enclosed
TC Dead Load: 5.0 psf
BC Dead Load: 5.0 psf
Max comp. force 951 Lbs
Max tens. force 780 Lbs
Connector Plate Fabrication Tolerance = 20%
This truss is designed for a creep factor of 1.5 which is used to calculate total load deflection.

Joaquin Velez, FL Lic. #68182
Robbins Engineering
6904 Parke East Blvd
Tampa, FL, 33610
FL Cert.#5555

November 25,2009

Job	Mark	Quan	Type	Span	Pl-Hl	Left OH	Right OH	Engineering
JOHNSON-SPEC	A28GIR	1*2P	HIPP	441000	7	2- 0- 0	2- 0- 0	T3555334

SPEC LOT15 ROSEWOOD ESTATES

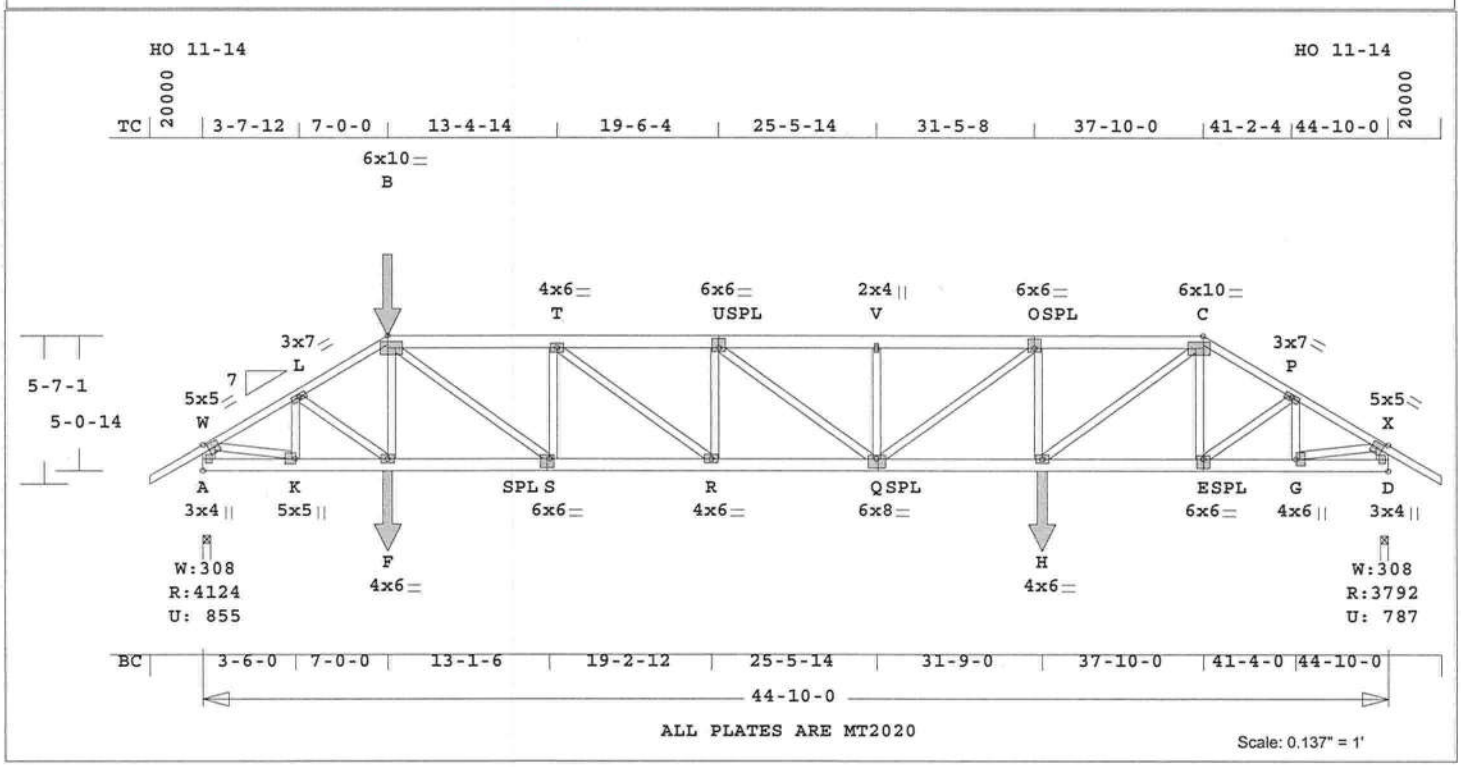

Robbins Engineering, Inc./Online Plus™

Online Plus -- Version 25.0.012
RUN DATE: 25-NOV-09
****
* 2-Ply Truss *
****

	CSI	-Size-	----Lumber----
TC	0.36	2x 6	SP-#2
--	0.28	2x 4	SP-#2
	W -B	C -X	
BC	0.75	2x 6	SP-#2
WB	0.44	2x 4	SP-#2
--	0.20	2x 6	SP-#2
	A -W	D -X	

Brace truss as follows:

	O.C.	From	To
TC	Cont.	0- 0- 0	44-10- 0
BC	Cont.	0- 0- 0	44-10- 0

psf-Ld	Dead	Live
TC	10.0	20.0
BC	10.0	0.0
TC+BC	20.0	20.0

Total 40.0 Spacing 24.0"
Lumber Duration Factor 1.25
Plate Duration Factor 1.25
TC Fb=1.00 Fc=1.00 Ft=1.00
BC Fb=1.00 Fc=1.00 Ft=1.00

Total Load Reactions (Lbs)

Jt	Down	Uplift	Horiz-
A	4124	855 U	129 R
D	3792	787 U	129 R

Jt	Brg Size	Required
A	3.5"	2.4"
D	3.5"	2.2"

LC# 1 Standard Loading
Dur Fctrs - Lbr 1.25 Plt 1.25

plf -	Dead	Live*	From	To
TC V	20	40	0.0'	44.8'
BC V	20	0	0.0'	44.8'
TC V	25	50	7.0'	31.5'
BC V	25	0	7.0'	31.5'
TC V	122	122	7.0'	CL-LB
BC V	173	173	7.0'	CL-LB
BC V	519	519	31.8'	CL-LB

Plus 9 Wind Load Case(s)
Plus 1 UBC LL Load Case(s)
Plus 1 DL Load Case(s)

Membr	CSI	P Lbs	Axl-CSI-Bnd
----------Top Chords----------			
W -L	0.21	5437 C	0.17 0.04
L -B	0.28	6257 C	0.20 0.08
B -T	0.33	8636 C	0.20 0.13
T -U	0.36	10155 C	0.23 0.13
U -V	0.35	10261 C	0.24 0.11
V -O	0.35	10261 C	0.24 0.11
O -C	0.27	8839 C	0.20 0.07
C -P	0.22	5703 C	0.18 0.04
P -X	0.19	4986 C	0.15 0.04
--------Bottom Chords---------			
A -K	0.08	117 T	0.00 0.08
K -F	0.39	4687 T	0.31 0.08
F -S	0.43	5435 T	0.36 0.07
S -R	0.64	8636 T	0.57 0.07
R -Q	0.75	10155 T	0.67 0.08
Q -H	0.68	8839 T	0.59 0.09
H -E	0.36	4947 T	0.33 0.03
E -G	0.35	4307 T	0.28 0.07
G -D	0.07	117 T	0.00 0.07
----------Webs----------			
A -W	0.20	4035 C	WindLd
W -K	0.44	4801 T	
K -L	0.08	1082 C	
L -F	0.08	924 T	
F -B	0.02	279 T	
B -S	0.36	3955 T	
S -T	0.20	2037 C	
T -R	0.17	1902 T	
R -U	0.08	881 C	
U -Q	0.01	246 T	
Q -V	0.08	863 C	
Q -O	0.16	1781 T	
H -O	0.16	1632 C	
H -C	0.44	4817 T	
E -C	0.02	284 C	
E -P	0.07	781 T	
G -P	0.08	995 C	
G -X	0.40	4411 T	
D -X	0.18	3707 C	WindLd

TL Defl -0.70" in R -Q L/755
LL Defl -0.28" in R -Q L/999
Shear // Grain in B -T 0.19

Plates for each ply each face.
Plate - MT20 20 Ga, Gross Area
Plate - MT2H 20 Ga, Gross Area

Jt	Type	Plt Size	X	Y	JSI
W	MT20	5.0x 5.0	-0.4	-0.3	0.97
L	MT20	3.0x 7.0	Ctr	Ctr	0.28
B	MT20	6.0x10.0	Ctr	Ctr	0.61
T	MT20	4.0x 6.0	Ctr	Ctr	0.36
U	MT20	6.0x 6.0	Ctr	1.2	0.43
V	MT20	2.0x 4.0	Ctr	Ctr	0.27
O	MT20	6.0x 6.0	Ctr	1.2	0.43
C	MT20	6.0x10.0	Ctr	Ctr	0.61
P	MT20	3.0x 7.0	Ctr	Ctr	0.23
X	MT20	5.0x 5.0	0.4	-0.3	0.89
A	MT20	3.0x 4.0	Ctr	Ctr	0.51
K	MT20	5.0x 5.0	-2.2	0.2	0.83
F	MT20	4.0x 6.0	Ctr	Ctr	0.17
S	MT20	6.0x 6.0	Ctr	-1.2	0.75
R	MT20	4.0x 6.0	Ctr	Ctr	0.36
Q	MT20	6.0x 8.0	-0.5	-1.2	0.88
H	MT20	4.0x 6.0	Ctr	Ctr	0.90
E	MT20	6.0x 6.0	Ctr	-1.2	0.43
G	MT20	4.0x 6.0	2.2	0.2	0.83
D	MT20	3.0x 4.0	Ctr	Ctr	0.47

APPROX. TRUSS WEIGHT: 406.9 LBS

REVIEWED BY:
Robbins Engineering, Inc.
6904 Parke East Blvd.
Tampa, FL 33610

REFER TO ROBBINS ENG. GENERAL NOTES AND SYMBOLS SHEET FOR ADDITIONAL SPECIFICATIONS.

NOTES:
Trusses Manufactured by:
Mayo Truss Co. Inc.
Analysis Conforms To:
FBC2007
TPI 2002
2 COMPLETE TRUSSES REQUIRED.
Fasten together in staggered pattern. (1/2" bolts -OR- SDS3 screws -OR- 10d nails as each layer is applied.)

	Rows	Nails	Screws	Bolts
		----Spacing (In)----		
TC	1	12	24	0
BC	2	12	24	0
WB	1	8	8	

Plus clusters of nails where shown.
OH Loading
Soffit psf 2.0
This truss has been designed for 20.0 psf LL on the B.C. in areas where a rectangle
3- 6- 0 tall by
2- 0- 0 wide
will fit between the B.C. and any other member.
Design checked for 10 psf non-concurrent LL on BC.
Wind Loads - ANSI / ASCE 7-05
Truss is designed as Components and Claddings* for Exterior zone location.
Wind Speed: 120 mph
Mean Roof Height: 15-0
Exposure Category: B
Occupancy Factor : 1.00
Building Type: Enclosed
TC Dead Load: 5.0 psf
BC Dead Load: 5.0 psf

Max comp. force 10261 Lbs
Max tens. force 10155 Lbs
Connector Plate Fabrication Tolerance = 20%
This truss is designed for a creep factor of 1.5 which is used to calculate total load deflection.

Joaquin Velez, FL Lic. #68182
Robbins Engineering
6904 Parke East Blvd
Tampa, FL, 33610
FL Cert.#5555

November 25,2009

Job	Mark	Quan	Type	Span	P1-H1	Left OH	Right OH	Engineering
JOHNSON-SPEC	B1	6	TR	240000	7	2- 0- 0	2- 0- 0	T3555335

SPEC LOT15 ROSEWOOD ESTATES

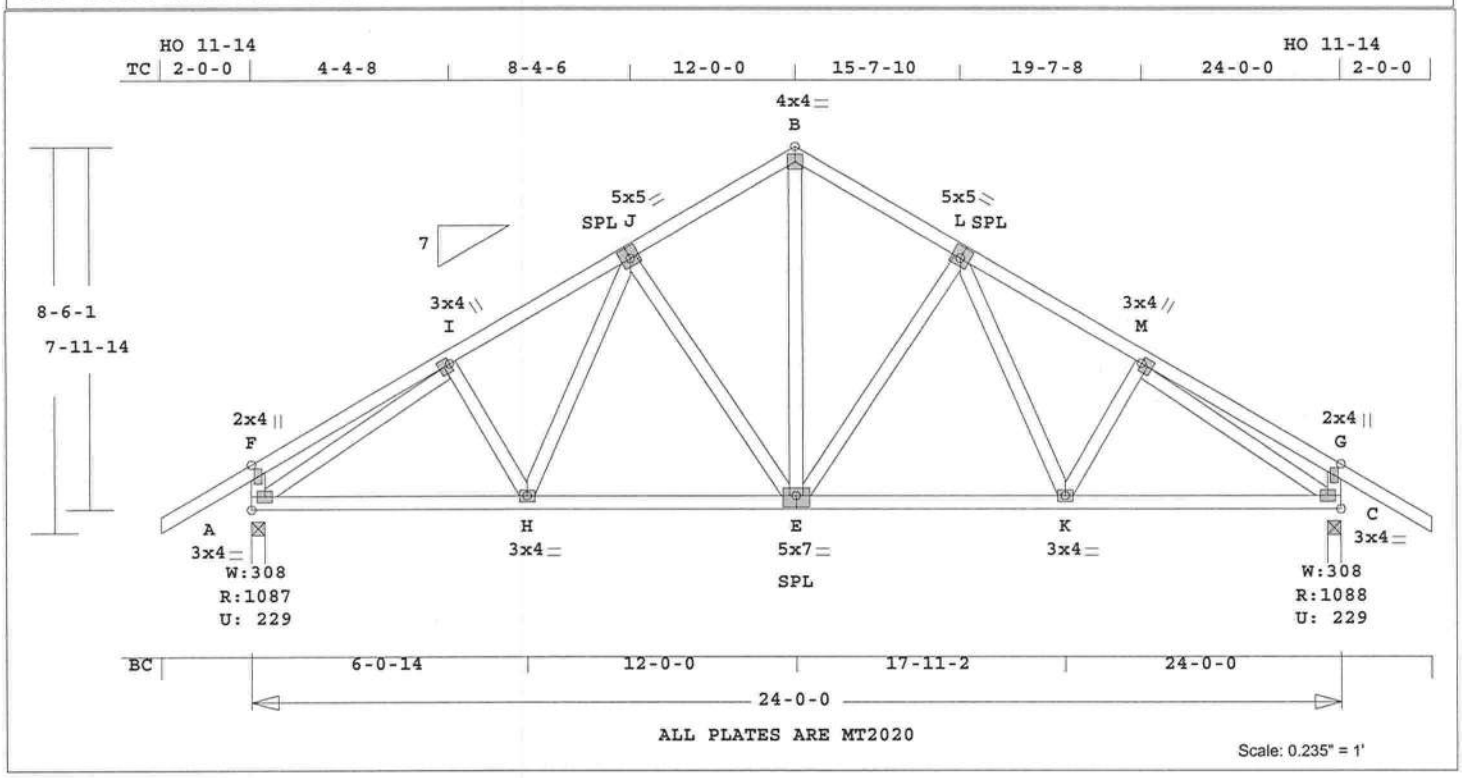

Robbins Engineering, Inc./Online Plus™ APPROX. TRUSS WEIGHT: 199.6 LBS

Online Plus -- Version 25.0.012
RUN DATE: 25-NOV-09

	CSI	-Size-	----Lumber----
TC	0.20	2x 4	SP-#2
BC	0.32	2x 4	SP-#2
WB	0.53	2x 4	SP-#2

Brace truss as follows:

	O.C.	From	To
TC	Cont.	0- 0- 0	24- 0- 0
BC	Cont.	0- 0- 0	24- 0- 0

psf-Ld	Dead	Live
TC	10.0	20.0
BC	10.0	0.0
TC+BC	20.0	20.0

Total 40.0 Spacing 24.0"
Lumber Duration Factor 1.25
Plate Duration Factor 1.25
TC Fb=1.15 Fc=1.10 Ft=1.10
BC Fb=1.10 Fc=1.10 Ft=1.10

Total Load Reactions (Lbs)

Jt	Down	Uplift	Horiz-
A	1088	230 U	194 R
C	1088	230 U	194 R

Jt	Brg Size	Required
A	3.5"	1.5"
C	3.5"	1.5"

Plus 9 Wind Load Case(s)
Plus 1 UBC LL Load Case(s)
Plus 1 DL Load Case(s)

Membr	CSI	P Lbs	Axl-CSI-Bnd	
----------Top Chords----------				
F -I	0.17	83 T	0.01	0.16
I -J	0.20	1162 C	0.07	0.13
J -B	0.15	864 C	0.06	0.09
B -L	0.15	864 C	0.06	0.09
L -M	0.20	1162 C	0.07	0.13
M -G	0.17	83 T	0.01	0.16
--------Bottom Chords---------				
A -H	0.32	1035 T	0.10	0.22
H -E	0.31	920 T	0.09	0.22
E -K	0.31	920 T	0.09	0.22
K -C	0.32	1035 T	0.10	0.22
----------Webs----------				
A -F	0.03	253 T	WindLd	
A -I	0.53	1301 C		
I -H	0.03	177 T		
H -J	0.05	249 T		
J -E	0.22	345 C		
E -B	0.32	655 T		
E -L	0.22	345 C		
L -K	0.05	249 T		
K -M	0.03	177 T		
M -C	0.53	1301 C		
C -G	0.03	253 T	WindLd	

TL Defl -0.10" in K -C L/999
LL Defl -0.04" in K -C L/999
Shear // Grain in F -I 0.16

Plates for each ply each face.
Plate - MT20 20 Ga, Gross Area
Plate - MT2H 20 Ga, Gross Area

Jt	Type	Plt Size	X	Y	JSI
F	MT20	2.0x 4.0	Ctr	Ctr	0.28
I	MT20	3.0x 4.0	-1.2	-0.8	0.75
J	MT20	5.0x 5.0	-0.3	0.5	0.49
B	MT20	4.0x 4.0	Ctr	Ctr	0.42
L	MT20	5.0x 5.0	0.3	0.5	0.49
M	MT20	3.0x 4.0	1.2	-0.8	0.75
G	MT20	2.0x 4.0	Ctr	Ctr	0.28
A	MT20	3.0x 4.0	Ctr	Ctr	0.85
H	MT20	3.0x 4.0	Ctr	Ctr	0.38
E	MT20	5.0x 7.0	Ctr	-0.5	0.45
K	MT20	3.0x 4.0	Ctr	Ctr	0.38
C	MT20	3.0x 4.0	Ctr	Ctr	0.85

REVIEWED BY:
Robbins Engineering, Inc.
6904 Parke East Blvd.
Tampa, FL 33610

REFER TO ROBBINS ENG. GENERAL NOTES AND SYMBOLS SHEET FOR ADDITIONAL SPECIFICATIONS.

NOTES:
Trusses Manufactured by:
Mayo Truss Co. Inc.
Analysis Conforms To:
FBC2007
TPI 2002
OH Loading
Soffit psf 2.0
This truss has been designed for 20.0 psf LL on the B.C. in areas where a rectangle 3- 6- 0 tall by 2- 0- 0 wide will fit between the B.C. and any other member.
Design checked for 10 psf non-concurrent LL on BC.
Wind Loads - ANSI / ASCE 7-05
Truss is designed as Components and Claddings* for Exterior zone location.
Wind Speed: 120 mph
Mean Roof Height: 15-0
Exposure Category: B
Occupancy Factor : 1.00
Building Type: Enclosed
TC Dead Load: 5.0 psf
BC Dead Load: 5.0 psf
Max comp. force 1301 Lbs
Max tens. force 1035 Lbs
Connector Plate Fabrication Tolerance = 20%
This truss is designed for a creep factor of 1.5 which is used to calculate total load deflection.

Joaquin Velez, FL Lic. #68182
Robbins Engineering
6904 Parke East Blvd
Tampa, FL, 33610
FL Cert.#5555

November 25,2009

Job	Mark	Quan	Type	Span	P1-H1	Left OH	Right OH	Engineering
JOHNSON-SPEC	B2	1	HIPP	240000	7	2- 0- 0	2- 0- 0	T3555336

SPEC LOT15 ROSEWOOD ESTATES

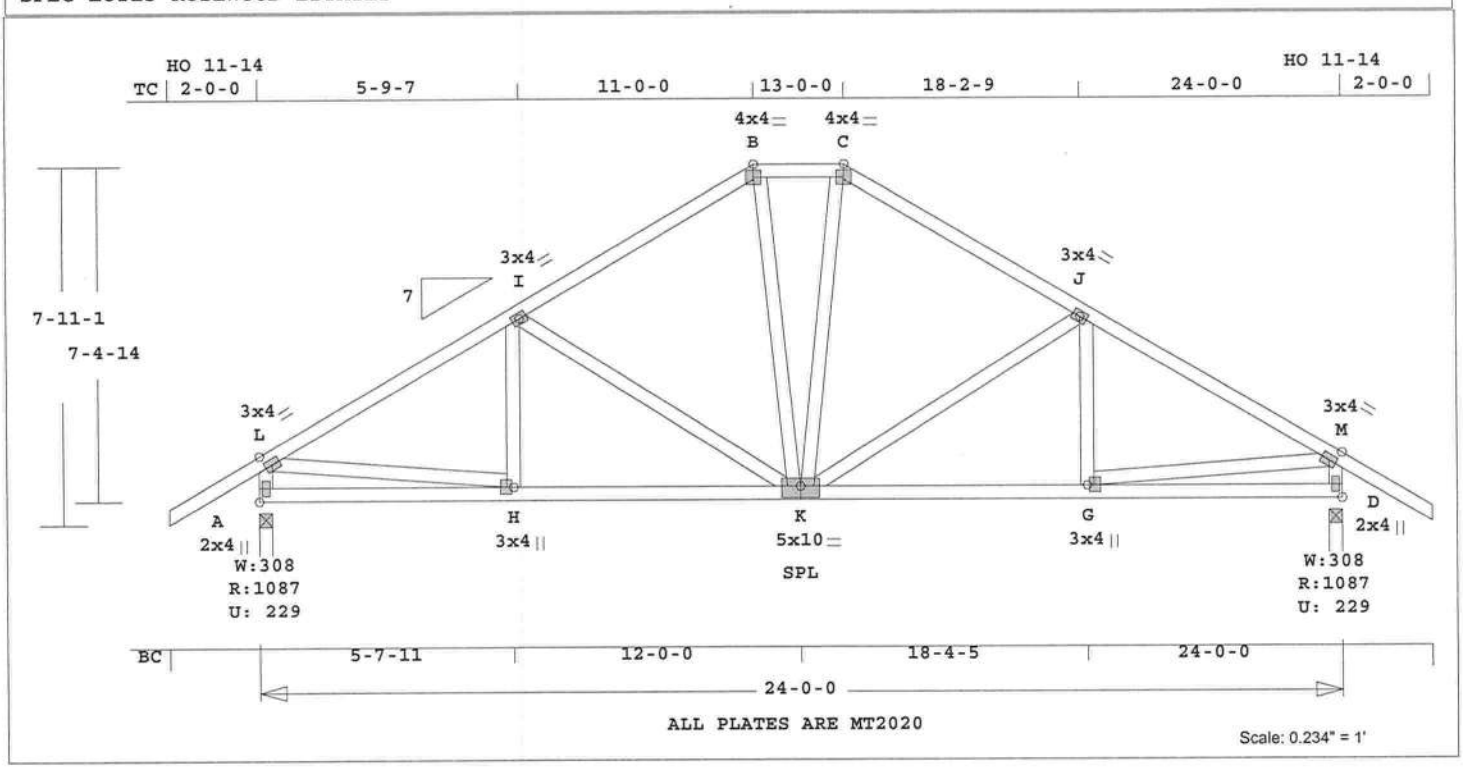

Robbins Engineering, Inc./Online Plus™ APPROX. TRUSS WEIGHT: 194.9 LBS

Online Plus -- Version 25.0.012
RUN DATE: 25-NOV-09

	CSI	-Size-	----Lumber----
TC	0.34	2x 4	SP-#2
BC	0.32	2x 4	SP-#2
WB	0.31	2x 4	SP-#2

Brace truss as follows:

	O.C.	From	To
TC	Cont.	0- 0- 0	24- 0- 0
BC	Cont.	0- 0- 0	24- 0- 0

psf-Ld	Dead	Live
TC	10.0	20.0
BC	10.0	0.0
TC+BC	20.0	20.0

Total 40.0 Spacing 24.0"
Lumber Duration Factor 1.25
Plate Duration Factor 1.25
TC Fb=1.15 Fc=1.10 Ft=1.10
BC Fb=1.10 Fc=1.10 Ft=1.10

Total Load Reactions (Lbs)

Jt	Down	Uplift	Horiz-
A	1088	230 U	182 R
D	1088	230 U	182 R

Jt	Brg Size	Required
A	3.5"	1.5"
D	3.5"	1.5"

Plus 9 Wind Load Case(s)
Plus 1 UBC LL Load Case(s)
Plus 1 DL Load Case(s)

Membr	CSI	P Lbs	Axl-CSI-Bnd
----------Top Chords----------			
L -I	0.34	1219 C	0.00 0.34
I -B	0.34	903 C	0.00 0.34
B -C	0.11	800 C	0.06 0.05
C -J	0.34	903 C	0.00 0.34
J -M	0.34	1219 C	0.00 0.34
--------Bottom Chords---------			
A -H	0.20	170 T	0.00 0.20
H -K	0.32	1066 T	0.11 0.21
K -G	0.32	1066 T	0.11 0.21
G -D	0.20	170 T	0.00 0.20
----------Webs----------			
A -L	0.09	1040 C	WindLd
L -H	0.19	1076 T	
H -I	0.02	149 T	
I -K	0.31	382 C	
B -K	0.08	269 T	
K -C	0.08	269 T	
K -J	0.31	382 C	
G -J	0.02	149 T	
G -M	0.19	1076 T	
D -M	0.09	1040 C	WindLd

TL Defl -0.10" in H -K L/999
LL Defl -0.03" in H -K L/999
Shear // Grain in L -I 0.22

Plates for each ply each face.
Plate - MT20 20 Ga, Gross Area
Plate - MT2H 20 Ga, Gross Area

Jt	Type	Plt Size	X	Y	JSI
L	MT20	3.0x 4.0	Ctr	Ctr	0.71
I	MT20	3.0x 4.0	Ctr	Ctr	0.48
B	MT20	4.0x 4.0	Ctr	Ctr	0.58
C	MT20	4.0x 4.0	Ctr	Ctr	0.58
J	MT20	3.0x 4.0	Ctr	Ctr	0.48
M	MT20	3.0x 4.0	Ctr	Ctr	0.71
A	MT20	2.0x 4.0	Ctr	Ctr	0.44
H	MT20	3.0x 4.0	-2.0	0.1	0.77
K	MT20	5.0x10.0	Ctr	-0.5	0.49
G	MT20	3.0x 4.0	2.0	0.1	0.77
D	MT20	2.0x 4.0	Ctr	Ctr	0.44

REVIEWED BY:
Robbins Engineering, Inc.
6904 Parke East Blvd.
Tampa, FL 33610

REFER TO ROBBINS ENG. GENERAL NOTES AND SYMBOLS SHEET FOR ADDITIONAL SPECIFICATIONS.

NOTES:
Trusses Manufactured by:
Mayo Truss Co. Inc.
Analysis Conforms To:
FBC2007
TPI 2002
OH Loading
Soffit psf 2.0
This truss has been designed for 20.0 psf LL on the B.C. in areas where a rectangle 3- 6- 0 tall by 2- 0- 0 wide will fit between the B.C. and any other member.
Design checked for 10 psf non-concurrent LL on BC.
Wind Loads - ANSI / ASCE 7-05
Truss is designed as Components and Claddings* for Exterior zone location.
Wind Speed: 120 mph
Mean Roof Height: 15-0
Exposure Category: B
Occupancy Factor : 1.00
Building Type: Enclosed
TC Dead Load: 5.0 psf
BC Dead Load: 5.0 psf
Max comp. force 1219 Lbs
Max tens. force 1076 Lbs
Connector Plate Fabrication Tolerance = 20%
This truss is designed for a creep factor of 1.5 which is used to calculate total load deflection.

Joaquin Velez, FL Lic. #68182
Robbins Engineering
6904 Parke East Blvd
Tampa, FL, 33610
FL Cert.#5555

November 25,2009

Job	Mark	Quan	Type	Span	P1-H1	Left OH	Right OH	Engineering
JOHNSON-SPEC	B3	1	HIPP	240000	7	2- 0- 0	2- 0- 0	T3555337

SPEC LOT15 ROSEWOOD ESTATES

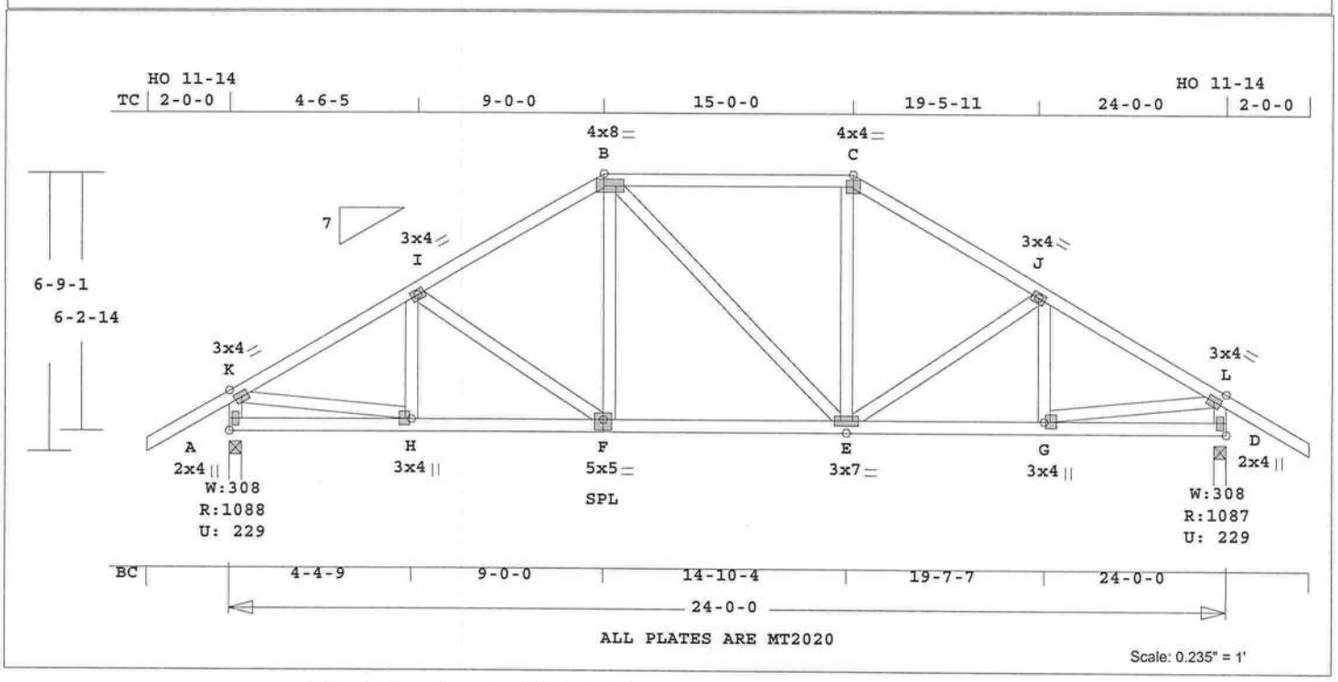

Robbins Engineering, Inc./Online Plus™ APPROX. TRUSS WEIGHT: 190.3 LBS

Online Plus -- Version 25.0.012
RUN DATE: 25-NOV-09

	CSI	-Size-	----Lumber----
TC	0.32	2x 4	SP-#2
BC	0.26	2x 4	SP-#2
WB	0.19	2x 4	SP-#2

Brace truss as follows:

	O.C.	From	To
TC	Cont.	0- 0- 0	24- 0- 0
BC	Cont.	0- 0- 0	24- 0- 0

psf-Ld	Dead	Live
TC	10.0	20.0
BC	10.0	0.0
TC+BC	20.0	20.0
Total	40.0	Spacing 24.0"

Lumber Duration Factor 1.25
Plate Duration Factor 1.25
TC Fb=1.15 Fc=1.10 Ft=1.10
BC Fb=1.10 Fc=1.10 Ft=1.10

Total Load Reactions (Lbs)

Jt	Down	Uplift	Horiz-
A	1088	230 U	153 R
D	1088	230 U	153 R

Jt	Brg Size	Required
A	3.5"	1.5"
D	3.5"	1.5"

Plus 9 Wind Load Case(s)
Plus 1 UBC LL Load Case(s)
Plus 1 DL Load Case(s)

Membr	CSI	P Lbs	Axl-CSI-Bnd	
----------Top Chords----------				
K -I	0.22	1209 C	0.07	0.15
I -B	0.21	1051 C	0.06	0.15
B -C	0.32	909 C	0.00	0.32
C -J	0.21	1052 C	0.06	0.15
J -L	0.22	1209 C	0.07	0.15
--------Bottom Chords---------				
A -H	0.10	141 T	0.00	0.10
H -F	0.25	1052 T	0.17	0.08
F -E	0.24	906 T	0.15	0.09
E -G	0.26	1053 T	0.17	0.09
G -D	0.10	141 T	0.00	0.10
----------Webs----------				
A -K	0.09	1048 C	WindLd	
K -H	0.19	1069 T		
H -I	0.01	118 T		
I -F	0.12	246 C		
F -B	0.04	282 T		
B -E	0.08	86 T		
E -C	0.04	283 T		
E -J	0.12	248 C		
G -J	0.01	119 T		
G -L	0.19	1069 T		
D -L	0.09	1048 C	WindLd	

TL Defl -0.10" in F -E L/999
LL Defl -0.03" in F -E L/999
Shear // Grain in B -C 0.21

Plates for each ply each face.
Plate - MT20 20 Ga, Gross Area
Plate - MT2H 20 Ga, Gross Area

Jt	Type	Plt Size	X	Y	JSI
K	MT20	3.0x 4.0	Ctr	Ctr	0.71
I	MT20	3.0x 4.0	Ctr	Ctr	0.48
B	MT20	4.0x 8.0	Ctr	Ctr	0.58
C	MT20	4.0x 4.0	Ctr	Ctr	0.58
J	MT20	3.0x 4.0	Ctr	Ctr	0.48
L	MT20	3.0x 4.0	Ctr	Ctr	0.71
A	MT20	2.0x 4.0	Ctr	Ctr	0.45
H	MT20	3.0x 4.0	-2.0	0.2	0.75
F	MT20	5.0x 5.0	Ctr	-0.5	0.46
E	MT20	3.0x 7.0	Ctr	Ctr	0.41
G	MT20	3.0x 4.0	2.0	0.2	0.75
D	MT20	2.0x 4.0	Ctr	Ctr	0.45

REVIEWED BY:
Robbins Engineering, Inc.
6904 Parke East Blvd.
Tampa, FL 33610

REFER TO ROBBINS ENG. GENERAL NOTES AND SYMBOLS SHEET FOR ADDITIONAL SPECIFICATIONS.

NOTES:
Trusses Manufactured by:
Mayo Truss Co. Inc.
Analysis Conforms To:
FBC2007
TPI 2002
OH Loading
Soffit psf 2.0
This truss has been designed for 20.0 psf LL on the B.C.
in areas where a rectangle
3- 6- 0 tall by
2- 0- 0 wide
will fit between the B.C. and any other member.
Design checked for 10 psf non-concurrent LL on BC.
Wind Loads - ANSI / ASCE 7-05
Truss is designed as Components and Claddings* for Exterior zone location.
Wind Speed: 120 mph
Mean Roof Height: 15-0
Exposure Category: B
Occupancy Factor : 1.00
Building Type: Enclosed
TC Dead Load: 5.0 psf
BC Dead Load: 5.0 psf
Max comp. force 1209 Lbs
Max tens. force 1069 Lbs
Connector Plate Fabrication Tolerance = 20%
This truss is designed for a creep factor of 1.5 which is used to calculate total load deflection.

Joaquin Velez, FL Lic. #68182
Robbins Engineering
6904 Parke East Blvd
Tampa, FL, 33610
FL Cert.#5555

November 25,2009

Job	Mark	Quan	Type	Span	P1-H1	Left OH	Right OH	Engineering
JOHNSON-SPEC	B4GIR	1	HIPP	240000	7	2- 0- 0	2- 0- 0	T3555338

SPEC LOT15 ROSEWOOD ESTATES

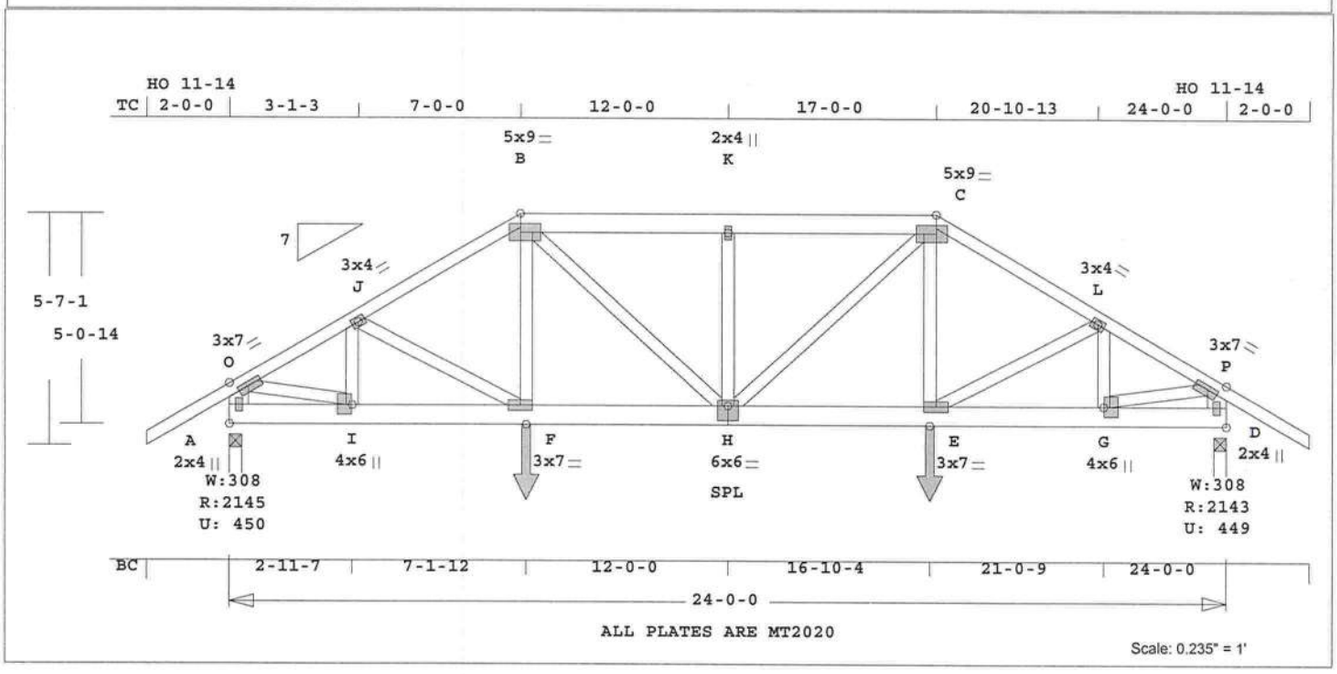

Robbins Engineering, Inc./Online Plus™ APPROX. TRUSS WEIGHT: 219.0 LBS

Online Plus -- Version 25.0.012
RUN DATE: 25-NOV-09

	CSI	-Size-	----Lumber----
TC	0.45	2x 4	SP-#2
--	0.42	2x 6	SP-#2
	B -C		
BC	0.45	2x 6	SP-#2
WB	0.41	2x 4	SP-#2
--	0.12	2x 6	SP-#2
	A -O	D -P	

Brace truss as follows:

	O.C.	From	To
TC	Cont.	0- 0- 0	24- 0- 0
BC	Cont.	0- 0- 0	24- 0- 0

psf-Ld	Dead	Live
TC	10.0	20.0
BC	10.0	0.0
TC+BC	20.0	20.0
Total	40.0	Spacing 24.0"

Lumber Duration Factor 1.25
Plate Duration Factor 1.25
TC Fb=1.00 Fc=1.00 Ft=1.00
BC Fb=1.00 Fc=1.00 Ft=1.00

Total Load Reactions (Lbs)

Jt	Down	Uplift	Horiz-
A	2146	450 U	124 R
D	2143	450 U	124 R

Jt	Brg Size	Required
A	3.5"	2.5"
D	3.5"	2.5"

LC# 1 Girder Loading
Dur Fctrs - Lbr 1.25 Plt 1.25

plf -	Dead	Live*	From	To
TC V	20	40	0.0'	24.0'
BC V	20	0	0.0'	24.0'
TC V	25	50	7.0'	17.0'
BC V	25	0	7.1'	16.9'
BC V	280	280	7.1'	CL-LB
BC V	280	280	16.9'	CL-LB

Plus 9 Wind Load Case(s)
Plus 1 UBC LL Load Case(s)
Plus 1 DL Load Case(s)

Membr	CSI	P Lbs	Axl-CSI-Bnd
----------Top Chords----------			
O -J	0.21	2536 C	0.15 0.06
J -B	0.45	2916 C	0.06 0.39
B -K	0.42	3145 C	0.03 0.39
K -C	0.42	3145 C	0.03 0.39
C -L	0.45	2920 C	0.06 0.39
L -P	0.23	2543 C	0.16 0.07
--------Bottom Chords---------			
A -I	0.05	112 T	0.00 0.05
I -F	0.37	2185 T	0.29 0.08
F -H	0.45	2529 T	0.33 0.12
H -E	0.45	2532 T	0.33 0.12
E -G	0.37	2196 T	0.29 0.08
G -D	0.05	112 T	0.00 0.05
----------Webs----------			
A -O	0.12	2094 C	WindLd
O -I	0.41	2261 T	
I -J	0.06	539 C	
J -F	0.07	406 T	
F -B	0.09	552 T	
B -H	0.23	835 T	
H -K	0.25	849 C	
H -C	0.23	831 T	
E -C	0.09	553 T	
E -L	0.07	396 T	
G -L	0.06	543 C	
G -P	0.41	2273 T	
D -P	0.12	2091 C	WindLd

TL Defl -0.19" in H -E L/999
LL Defl -0.08" in H -E L/999
Shear // Grain in B -K 0.35

Plates for each ply each face.
Plate - MT20 20 Ga, Gross Area
Plate - MT2H 20 Ga, Gross Area

Jt	Type	Plt Size	X	Y	JSI
O	MT20	3.0x 7.0	0.5	-0.1	0.83
J	MT20	3.0x 4.0	Ctr	Ctr	0.48
B	MT20	5.0x 9.0	-0.5	Ctr	0.73
K	MT20	2.0x 4.0	Ctr	Ctr	0.49
C	MT20	5.0x 9.0	0.5	Ctr	0.73
L	MT20	3.0x 4.0	Ctr	Ctr	0.48
P	MT20	3.0x 7.0	-0.5	-0.1	0.84
A	MT20	2.0x 4.0	Ctr	Ctr	0.81
I	MT20	4.0x 6.0	-2.2	0.3	0.85
F	MT20	3.0x 7.0	Ctr	Ctr	0.23
H	MT20	6.0x 6.0	Ctr	-1.2	0.87
E	MT20	3.0x 7.0	Ctr	Ctr	0.23
G	MT20	4.0x 6.0	2.2	0.3	0.85
D	MT20	2.0x 4.0	Ctr	Ctr	0.81

REVIEWED BY:
Robbins Engineering, Inc.
6904 Parke East Blvd.
Tampa, FL 33610

REFER TO ROBBINS ENG. GENERAL NOTES AND SYMBOLS SHEET FOR ADDITIONAL SPECIFICATIONS.

NOTES:
Trusses Manufactured by:
Mayo Truss Co. Inc.
Analysis Conforms To:
FBC2007
TPI 2002
Girder Step Down Hip
Framing King Jacks
Jack Open Faced
Setback 7- 0- 0
OH Loading
Soffit psf 2.0
Design checked for 10 psf non-concurrent LL on BC.
Wind Loads - ANSI / ASCE 7-05
Truss is designed as
Components and Claddings* for Exterior zone location.
Wind Speed: 120 mph
Mean Roof Height: 15-0
Exposure Category: B
Occupancy Factor : 1.00
Building Type: Enclosed
TC Dead Load: 5.0 psf
BC Dead Load: 5.0 psf
Max comp. force 3145 Lbs
Max tens. force 2532 Lbs
Connector Plate Fabrication Tolerance = 20%
This truss is designed for a creep factor of 1.5 which is used to calculate total load deflection.

Joaquin Velez, FL Lic. #68182
Robbins Engineering
6904 Parke East Blvd
Tampa, FL, 33610
FL Cert.#5555

November 25,2009

Job	Mark	Quan	Type	Span	P1-H1	Left OH	Right OH	Engineering
JOHNSON-SPEC	B5	1	TR	220111	7	0	2- 0- 0	T3555339

SPEC LOT15 ROSEWOOD ESTATES

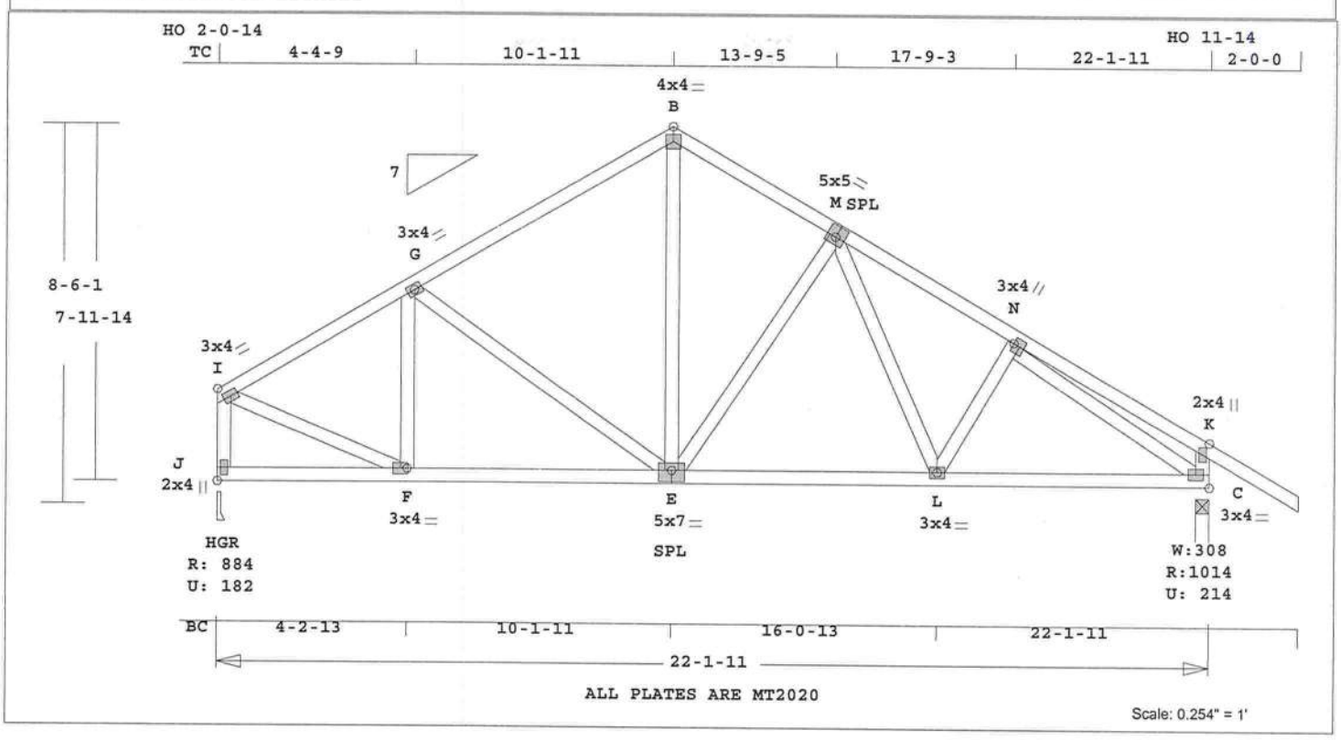

Robbins Engineering, Inc./Online Plus™ APPROX. TRUSS WEIGHT: 179.8 LBS

Online Plus -- Version 25.0.012
RUN DATE: 25-NOV-09

	CSI	-Size-	----Lumber----
TC	0.30	2x 4	SP-#2
BC	0.30	2x 4	SP-#2
WB	0.48	2x 4	SP-#2

Brace truss as follows:

	O.C.	From	To
TC	Cont.	0- 0- 0	22- 1-11
BC	Cont.	0- 0- 0	22- 1-11

psf-Ld	Dead	Live
TC	10.0	20.0
BC	10.0	0.0
TC+BC	20.0	20.0
Total	40.0	Spacing 24.0"

Lumber Duration Factor 1.25
Plate Duration Factor 1.25
TC Fb=1.15 Fc=1.10 Ft=1.10
BC Fb=1.10 Fc=1.10 Ft=1.10

Total Load Reactions (Lbs)

Jt	Down	Uplift	Horiz-
J	885	183 U	215 R
C	1014	214 U	191 R

Jt	Brg Size	Required
J	3.5"	1.5"
C	3.5"	1.5"

Plus 9 Wind Load Case(s)
Plus 1 UBC LL Load Case(s)
Plus 1 DL Load Case(s)

Membr	CSI	P Lbs	Axl-CSI-Bnd
----------Top Chords----------			
I -G	0.30	831 C	0.00 0.30
G -B	0.30	744 C	0.00 0.30
B -M	0.17	732 C	0.06 0.11
M -N	0.20	1043 C	0.06 0.14
N -K	0.18	83 T	0.01 0.17
--------Bottom Chords---------			
J -F	0.15	186 T	0.00 0.15
F -E	0.25	735 T	0.07 0.18
E -L	0.29	809 T	0.08 0.21
L -C	0.30	939 T	0.09 0.21
----------Webs----------			
J -I	0.08	851 C	WindLd
I -F	0.14	807 T	
F -G	0.06	223 C	
G -E	0.15	197 C	
E -B	0.22	463 T	
E -M	0.22	337 C	
M -L	0.05	258 T	
L -N	0.03	186 T	
N -C	0.48	1181 C	
C -K	0.03	252 T	WindLd

TL Defl -0.09" in L -C L/999
LL Defl -0.04" in L -C L/999
Shear // Grain in G -B 0.21

Plates for each ply each face.
Plate - MT20 20 Ga, Gross Area
Plate - MT2H 20 Ga, Gross Area

Jt	Type	Plt Size	X	Y	JSI
I	MT20	3.0x 4.0	Ctr	Ctr	0.58
G	MT20	3.0x 4.0	Ctr	Ctr	0.48
B	MT20	4.0x 4.0	Ctr	Ctr	0.42
M	MT20	5.0x 5.0	0.3	0.5	0.49
N	MT20	3.0x 4.0	1.2	-0.8	0.68
K	MT20	2.0x 4.0	Ctr	Ctr	0.28
J	MT20	2.0x 4.0	Ctr	Ctr	0.31
F	MT20	3.0x 4.0	Ctr	Ctr	0.58
E	MT20	5.0x 7.0	Ctr	-0.5	0.45
L	MT20	3.0x 4.0	Ctr	Ctr	0.38
C	MT20	3.0x 4.0	Ctr	Ctr	0.77

REVIEWED BY:
Robbins Engineering, Inc.
6904 Parke East Blvd.
Tampa, FL 33610

REFER TO ROBBINS ENG. GENERAL NOTES AND SYMBOLS SHEET FOR ADDITIONAL SPECIFICATIONS.

NOTES:
Trusses Manufactured by:
Mayo Truss Co. Inc.
Analysis Conforms To:
FBC2007
TPI 2002
OH Loading
Soffit psf 2.0
This truss has been designed for 20.0 psf LL on the B.C. in areas where a rectangle 3- 6- 0 tall by 2- 0- 0 wide will fit between the B.C. and any other member.
Design checked for 10 psf non-concurrent LL on BC.
Wind Loads - ANSI / ASCE 7-05
Truss is designed as Components and Claddings* for Exterior zone location.
Wind Speed: 120 mph
Mean Roof Height: 15-0
Exposure Category: B
Occupancy Factor : 1.00
Building Type: Enclosed
TC Dead Load: 5.0 psf
BC Dead Load: 5.0 psf
Max comp. force 1181 Lbs
Max tens. force 939 Lbs
Connector Plate Fabrication Tolerance = 20%
This truss is designed for a creep factor of 1.5 which is used to calculate total load deflection.

Joaquin Velez, FL Lic. #68182
Robbins Engineering
6904 Parke East Blvd
Tampa, FL, 33610
FL Cert.#5555

November 25,2009

Job	Mark	Quan	Type	Span	Pl-Hl	Left OH	Right OH	Engineering
JOHNSON-SPEC	B6	1	TR	200111	7	0	2- 0- 0	T3555340

SPEC LOT15 ROSEWOOD ESTATES

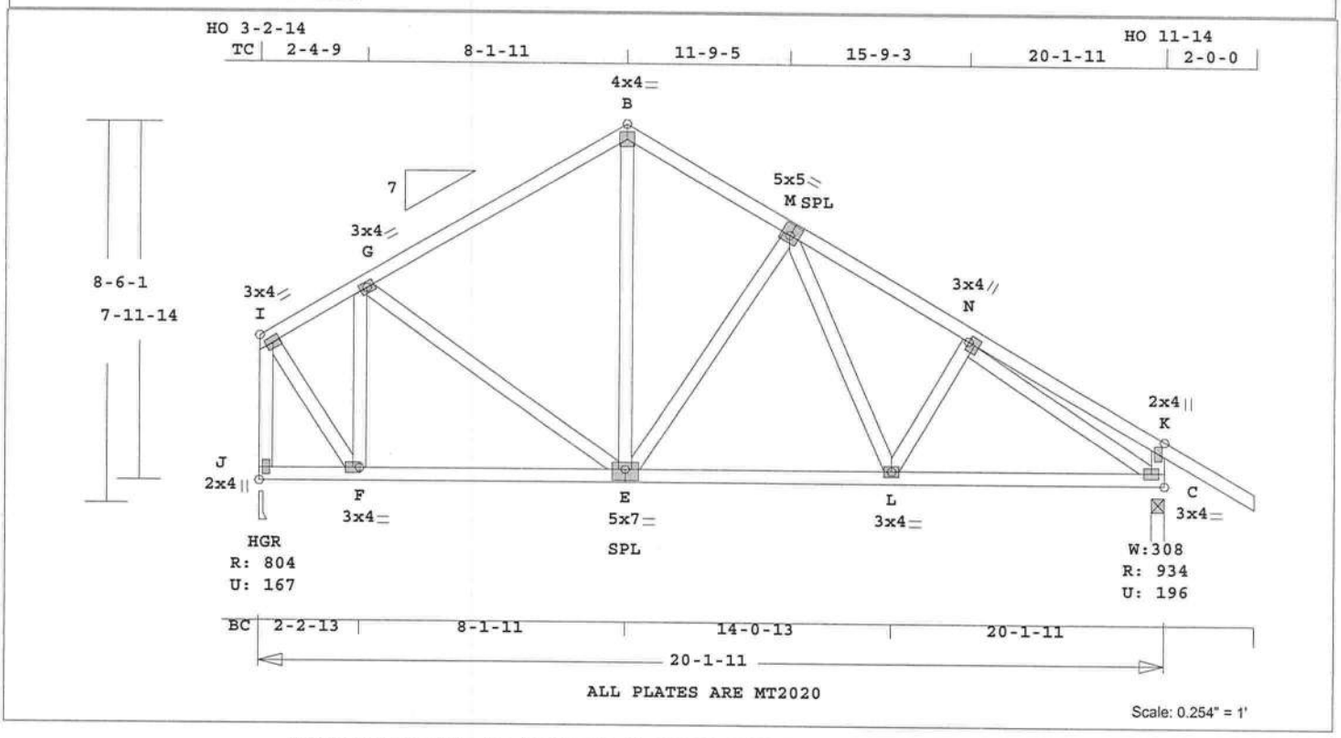

Robbins Engineering, Inc./Online Plus™ APPROX. TRUSS WEIGHT: 172.4 LBS

Online Plus -- Version 25.0.012
RUN DATE: 25-NOV-09

	CSI	-Size-	----Lumber----
TC	0.28	2x 4	SP-#2
BC	0.29	2x 4	SP-#2
WB	0.42	2x 4	SP-#2

Brace truss as follows:

	O.C.	From	To
TC	Cont.	0- 0- 0	20- 1-11
BC	Cont.	0- 0- 0	20- 1-11

psf-Ld	Dead	Live
TC	10.0	20.0
BC	10.0	0.0
TC+BC	20.0	20.0

Total 40.0 Spacing 24.0"
Lumber Duration Factor 1.25
Plate Duration Factor 1.25
TC Fb=1.15 Fc=1.10 Ft=1.10
BC Fb=1.10 Fc=1.10 Ft=1.10

Total Load Reactions (Lbs)

Jt	Down	Uplift	Horiz-
J	805	168 U	236 R
C	935	196 U	187 R

Jt	Brg Size	Required
J	3.5"	1.5"
C	3.5"	1.5"

Plus 9 Wind Load Case(s)
Plus 1 UBC LL Load Case(s)
Plus 1 DL Load Case(s)

Membr	CSI	P Lbs	Axl-CSI-Bnd
----------Top Chords----------			
I -G	0.28	421 C	0.00 0.28
G -B	0.28	600 C	0.00 0.28
B -M	0.16	602 C	0.05 0.11
M -N	0.20	914 C	0.06 0.14
N -K	0.18	83 T	0.01 0.17
--------Bottom Chords---------			
J -F	0.13	189 T	0.00 0.13
F -E	0.22	396 T	0.04 0.18
E -L	0.28	691 T	0.07 0.21
L -C	0.29	835 T	0.08 0.21
----------Webs----------			
J -I	0.12	799 C	WindLd
I -F	0.12	695 T	
F -G	0.13	475 C	
G -E	0.05	143 T	
E -B	0.16	356 T	
E -M	0.22	344 C	
M -L	0.06	269 T	
L -N	0.03	192 T	
N -C	0.42	1050 C	
C -K	0.03	252 T	WindLd

TL Defl -0.09" in L -C L/999
LL Defl -0.04" in L -C L/999
Shear // Grain in G -B 0.21

Plates for each ply each face.
Plate - MT20 20 Ga, Gross Area
Plate - MT2H 20 Ga, Gross Area

Jt	Type	Plt Size	X	Y	JSI
I	MT20	3.0x 4.0	Ctr	Ctr	0.54
G	MT20	3.0x 4.0	Ctr	Ctr	0.48
B	MT20	4.0x 4.0	Ctr	Ctr	0.42
M	MT20	5.0x 5.0	0.3	0.5	0.49
N	MT20	3.0x 4.0	1.2	-0.8	0.60
K	MT20	2.0x 4.0	Ctr	Ctr	0.28
J	MT20	2.0x 4.0	Ctr	Ctr	0.31
F	MT20	3.0x 4.0	Ctr	Ctr	0.55
E	MT20	5.0x 7.0	Ctr	-0.5	0.45
L	MT20	3.0x 4.0	Ctr	Ctr	0.38
C	MT20	3.0x 4.0	Ctr	Ctr	0.69

REVIEWED BY:
Robbins Engineering, Inc.
6904 Parke East Blvd.
Tampa, FL 33610

REFER TO ROBBINS ENG. GENERAL NOTES AND SYMBOLS SHEET FOR ADDITIONAL SPECIFICATIONS.

NOTES:
Trusses Manufactured by:
Mayo Truss Co. Inc.
Analysis Conforms To:
FBC2007
TPI 2002
OH Loading
Soffit psf 2.0
This truss has been designed for 20.0 psf LL on the B.C. in areas where a rectangle
3- 6- 0 tall by
2- 0- 0 wide
will fit between the B.C. and any other member.
Design checked for 10 psf non-concurrent LL on BC.
Wind Loads - ANSI / ASCE 7-05
Truss is designed as Components and Claddings* for Exterior zone location.
Wind Speed: 120 mph
Mean Roof Height: 15-0
Exposure Category: B
Occupancy Factor : 1.00
Building Type: Enclosed
TC Dead Load: 5.0 psf
BC Dead Load: 5.0 psf
Max comp. force 1050 Lbs
Max tens. force 835 Lbs
Connector Plate Fabrication Tolerance = 20%
This truss is designed for a creep factor of 1.5 which is used to calculate total load deflection.

Joaquin Velez, FL Lic. #68182
Robbins Engineering
6904 Parke East Blvd
Tampa, FL, 33610
FL Cert.#5555

November 25,2009

Job	Mark	Quan	Type	Span	Pl-Hl	Left OH	Right OH	Engineering
JOHNSON-SPEC	B7	1	SP	180111	4.95	0	2- 0- 0	T3555341

SPEC LOT15 ROSEWOOD ESTATES

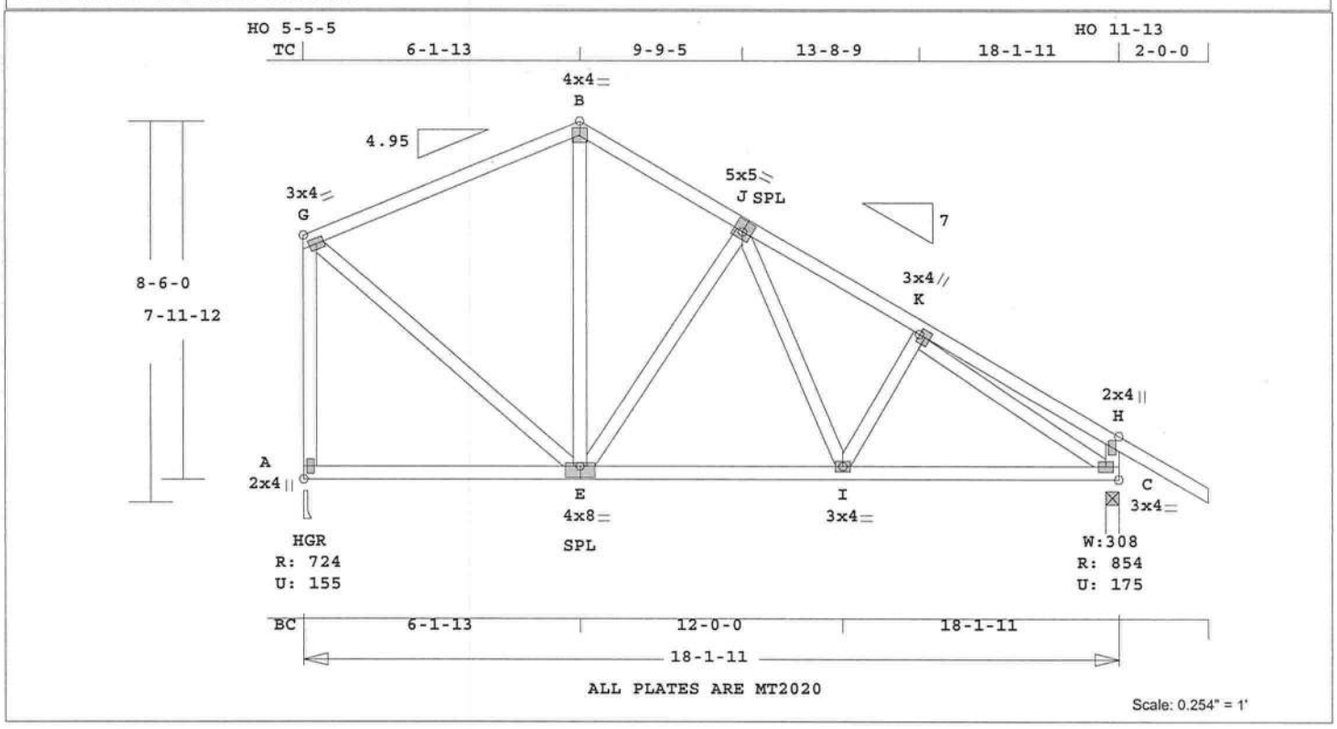

Robbins Engineering, Inc./Online Plus™ APPROX. TRUSS WEIGHT: 154.9 LBS

Online Plus -- Version 25.0.012
RUN DATE: 25-NOV-09

	CSI	-Size-	----Lumber----
TC	0.45	2x 4	SP-#2
BC	0.28	2x 4	SP-#2
WB	0.38	2x 4	SP-#2

Brace truss as follows:

	O.C.	From	To
TC	Cont.	0- 0- 0	18- 1-11
BC	Cont.	0- 0- 0	18- 1-11

psf-Ld	Dead	Live
TC	10.0	20.0
BC	10.0	0.0
TC+BC	20.0	20.0
Total	40.0	Spacing 24.0"

Lumber Duration Factor 1.25
Plate Duration Factor 1.25
TC Fb=1.15 Fc=1.10 Ft=1.10
BC Fb=1.10 Fc=1.10 Ft=1.10

Total Load Reactions (Lbs)

Jt	Down	Uplift	Horiz-
A	725	156 U	263 R
C	855	175 U	180 R

Jt	Brg Size	Required
A	3.5"	1.5"
C	3.5"	1.5"

Plus 9 Wind Load Case(s)
Plus 1 UBC LL Load Case(s)
Plus 1 DL Load Case(s)

Membr	CSI	P Lbs	Axl-CSI-Bnd
----------Top Chords----------			
G -B	0.45	421 C	0.04 0.41
B -J	0.26	449 C	0.05 0.21
J -K	0.20	783 C	0.06 0.14
K -H	0.18	84 T	0.01 0.17
--------Bottom Chords---------			
A -E	0.22	182 T	0.00 0.22
E -I	0.27	574 T	0.05 0.22
I -C	0.28	730 T	0.07 0.21
----------Webs----------			
A -G	0.28	673 C	WindLd
G -E	0.16	522 T	
E -B	0.03	189 T	
E -J	0.24	365 C	
J -I	0.06	276 T	
I -K	0.04	197 C	
K -C	0.38	917 C	
C -H	0.03	253 T	WindLd

TL Defl -0.09" in I -C L/999
LL Defl -0.04" in I -C L/999
Shear // Grain in G -B 0.27

Plates for each ply each face.
Plate - MT20 20 Ga, Gross Area
Plate - MT2H 20 Ga, Gross Area

Jt	Type	Plt Size	X	Y	JSI
G	MT20	3.0x 4.0	Ctr	Ctr	0.45
B	MT20	4.0x 4.0	Ctr	Ctr	0.44
J	MT20	5.0x 5.0	0.3	0.5	0.49
K	MT20	3.0x 4.0	1.2	-0.8	0.53
H	MT20	2.0x 4.0	Ctr	Ctr	0.28
A	MT20	2.0x 4.0	Ctr	Ctr	0.36
E	MT20	4.0x 8.0	Ctr	-1.0	0.53
I	MT20	3.0x 4.0	Ctr	Ctr	0.38
C	MT20	3.0x 4.0	Ctr	Ctr	0.60

REVIEWED BY:
Robbins Engineering, Inc.
6904 Parke East Blvd.
Tampa, FL 33610

REFER TO ROBBINS ENG. GENERAL NOTES AND SYMBOLS SHEET FOR ADDITIONAL SPECIFICATIONS.

NOTES:
Trusses Manufactured by:
Mayo Truss Co. Inc.
Analysis Conforms To:
FBC2007
TPI 2002
OH Loading
Soffit psf 2.0
This truss has been designed for 20.0 psf LL on the B.C. in areas where a rectangle
3- 6- 0 tall by
2- 0- 0 wide
will fit between the B.C. and any other member.
Design checked for 10 psf non-concurrent LL on BC.
Wind Loads - ANSI / ASCE 7-05
Truss is designed as Components and Claddings* for Exterior zone location.
Wind Speed: 120 mph
Mean Roof Height: 15-0
Exposure Category: B
Occupancy Factor : 1.00
Building Type: Enclosed
TC Dead Load: 5.0 psf
BC Dead Load: 5.0 psf
Max comp. force 917 Lbs
Max tens. force 730 Lbs
Connector Plate Fabrication Tolerance = 20%
This truss is designed for a creep factor of 1.5 which is used to calculate total load deflection.

Joaquin Velez, FL Lic. #68182
Robbins Engineering
6904 Parke East Blvd
Tampa, FL, 33610
FL Cert.#5555

November 25,2009

Job	Mark	Quan	Type	Span	P1-H1	Left OH	Right OH	Engineering
JOHNSON-SPEC	P1	1	SP	130514	7	10- 3	10- 3	T3555361

SPEC LOT15 ROSEWOOD ESTATES

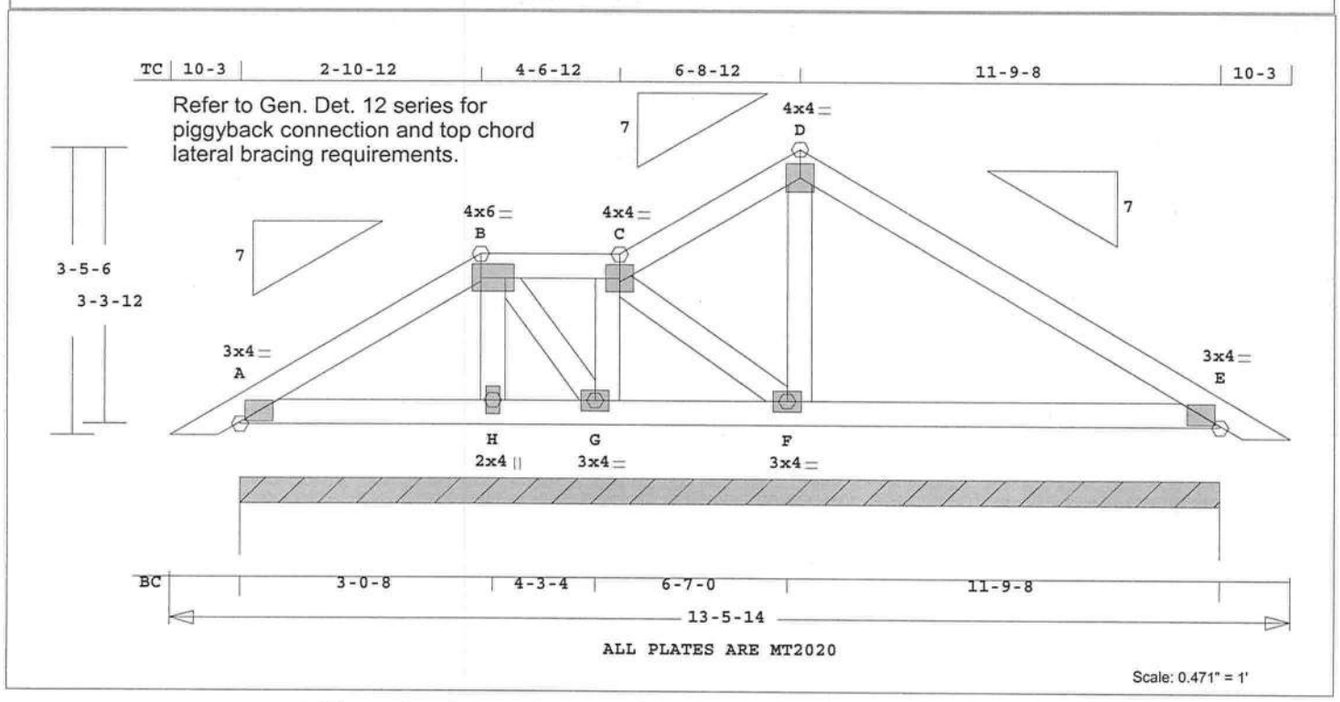

Robbins Engineering, Inc./Online Plus™ APPROX. TRUSS WEIGHT: 70.3 LBS

Online Plus -- Version 25.0.012
RUN DATE: 25-NOV-09

	CSI	-Size-	----Lumber----
TC	0.19	2x 4	SP-#2
BC	0.13	2x 4	SP-#2
WB	0.02	2x 4	SP-#2

Brace truss as follows:

	O.C.	From	To
TC	Cont.	0- 0- 0	13- 5-14
BC	Cont.	0- 0- 0	13- 5-14

psf-Ld	Dead	Live
TC	10.0	20.0
BC	10.0	0.0
TC+BC	20.0	20.0
Total	40.0	Spacing 24.0"

Lumber Duration Factor 1.25
Plate Duration Factor 1.25
TC Fb=1.15 Fc=1.10 Ft=1.10
BC Fb=1.10 Fc=1.10 Ft=1.10

Total Load Reactions (Lbs)

Jt	Down	Uplift	Horiz-
A	945	203 U	68 R

Jt	Brg Size	Required
A	141.5"	0"-to- 142"

Plus 9 Wind Load Case(s)
Plus 1 UBC LL Load Case(s)
Plus 1 DL Load Case(s)

Membr	CSI	P Lbs	Axl-CSI-Bnd	
----------Top Chords----------				
A -B	0.05	200 C	0.00	0.05
B -C	0.02	151 C	0.01	0.01
C -D	0.09	251 C	0.00	0.09
D -E	0.19	233 C	0.00	0.19
--------Bottom Chords---------				
A -H	0.03	2 T	0.00	0.03
H -G	0.03	0 T	0.00	0.03
G -F	0.12	0 T	0.00	0.12
F -E	0.13	2 T	0.00	0.13
----------Webs----------				
H -B	0.00	41 C		
B -G	0.00	72 C		
G -C	0.02	218 C		
C -F	0.00	52 T		
F -D	0.00	54 T		

TL Defl -0.03" in F -E L/999
LL Defl -0.01" in F -E L/999
Shear // Grain in D -E 0.15

Plates for each ply each face.
Plate - MT20 20 Ga, Gross Area
Plate - MT2H 20 Ga, Gross Area

Jt	Type	Plt Size	X	Y	JSI
A	MT20	3.0x 4.0	Ctr	Ctr	0.50
B	MT20	4.0x 6.0	Ctr	Ctr	0.58
C	MT20	4.0x 4.0	Ctr	Ctr	0.58
D	MT20	4.0x 4.0	Ctr	Ctr	0.42
E	MT20	3.0x 4.0	Ctr	Ctr	0.50
H	MT20	2.0x 4.0	Ctr	Ctr	0.13
G	MT20	3.0x 4.0	Ctr	Ctr	0.17
F	MT20	3.0x 4.0	Ctr	Ctr	0.17

REVIEWED BY:
Robbins Engineering, Inc.
6904 Parke East Blvd.
Tampa, FL 33610

REFER TO ROBBINS ENG. GENERAL NOTES AND SYMBOLS SHEET FOR ADDITIONAL SPECIFICATIONS.

NOTES:
Trusses Manufactured by:
Mayo Truss Co. Inc.
Analysis Conforms To:
FBC2007
TPI 2002
OH Loading
Soffit psf 2.0
This truss has been designed for 20.0 psf LL on the B.C. in areas where a rectangle
3- 6- 0 tall by
2- 0- 0 wide
will fit between the B.C. and any other member.
Design checked for 10 psf non-concurrent LL on BC.
Wind Loads - ANSI / ASCE 7-05

Truss is designed as Components and Claddings* for Exterior zone location.
Wind Speed: 120 mph
Mean Roof Height: 15-0
Exposure Category: B
Occupancy Factor : 1.00
Building Type: Enclosed
TC Dead Load: 5.0 psf
BC Dead Load: 5.0 psf
Max comp. force 251 Lbs
Max tens. force 193 Lbs
Connector Plate Fabrication Tolerance = 20%
This truss is designed for a creep factor of 1.5 which is used to calculate total load deflection.

Joaquin Velez, FL Lic. #68182
Robbins Engineering
6904 Parke East Blvd
Tampa, FL, 33610
FL Cert.#5555

November 25,2009

Job	Mark	Quan	Type	Span	Pl-Hl	Left OH	Right OH	Engineering
JOHNSON-SPEC	P2	1	SP	130514	7	10- 3	10- 3	T3555362

SPEC LOT15 ROSEWOOD ESTATES

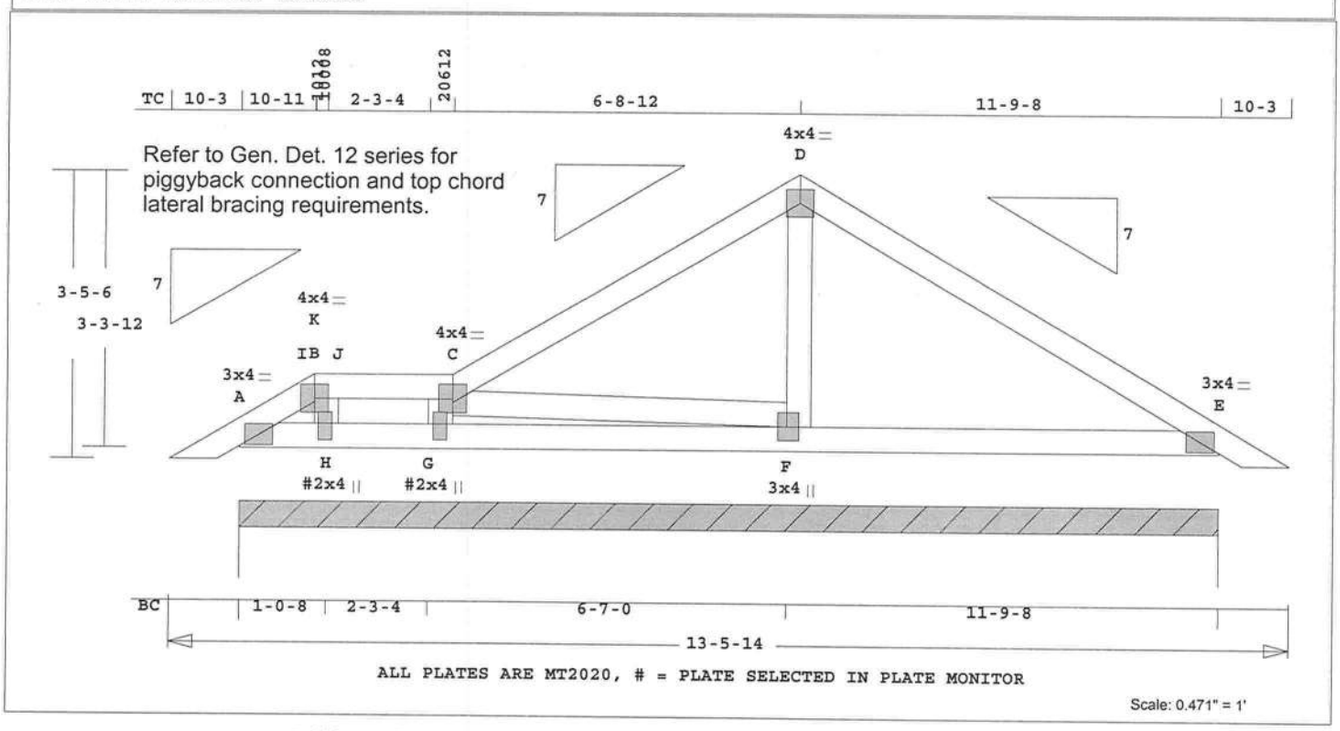

Robbins Engineering, Inc./Online Plus™ APPROX. TRUSS WEIGHT: 65.4 LBS

Online Plus -- Version 25.0.012
RUN DATE: 25-NOV-09

	CSI	-Size-	----Lumber----
TC	0.18	2x 4	SP-#2
BC	0.14	2x 4	SP-#2
WB	0.03	2x 4	SP-#2

Brace truss as follows:

	O.C.	From	To
TC	Cont.	0- 0- 0	13- 5-14
BC	Cont.	0- 0- 0	13- 5-14

psf-Ld	Dead	Live
TC	10.0	20.0
BC	10.0	0.0
TC+BC	20.0	20.0
Total	40.0	Spacing 24.0"

Lumber Duration Factor 1.25
Plate Duration Factor 1.25
TC Fb=1.15 Fc=1.10 Ft=1.10
BC Fb=1.10 Fc=1.10 Ft=1.10

Total Load Reactions (Lbs)

Jt	Down	Uplift	Horiz-
A	945	203 U	69 R

Jt	Brg Size	Required
A	141.5"	0"-to- 142"

Plus 9 Wind Load Case(s)
Plus 1 UBC LL Load Case(s)
Plus 1 DL Load Case(s)

Membr	CSI	P Lbs	Axl-CSI-Bnd	
----------Top Chords----------				
A -K	0.00	89 C		
K -C	0.03	78 C	0.00	0.03
C -D	0.12	245 C	0.02	0.10
D -E	0.18	239 C	0.00	0.18
--------Bottom Chords---------				
A -H	0.01	5 T	0.00	0.01
H -G	0.05	0 T	0.00	0.05
G -F	0.14	0 T	0.00	0.14
F -E	0.14	2 T	0.00	0.14
----------Webs----------				
H -K	0.01	80 T		
G -C	0.03	314 C		
C -F	0.02	130 T		
F -D	0.00	48 C		

TL Defl -0.03" in F -E L/999
LL Defl -0.01" in F -E L/999
Shear // Grain in D -E 0.15

Plates for each ply each face.
Plate - MT20 20 Ga, Gross Area
Plate - MT2H 20 Ga, Gross Area

Jt	Type	Plt Size	X	Y	JSI
A	MT20	3.0x 4.0	Ctr	Ctr	0.50
K	MT20	4.0x 4.0	Ctr	Ctr	0.58
C	MT20	4.0x 4.0	Ctr	Ctr	0.58
D	MT20	4.0x 4.0	Ctr	Ctr	0.42
E	MT20	3.0x 4.0	Ctr	Ctr	0.50
H#	MT20	2.0x 4.0-0.2-0.4			0.15
G#	MT20	2.0x 4.0-0.1-0.3			0.18
F	MT20	3.0x 4.0-1.5	Ctr		0.20

= Plate Monitor used
REVIEWED BY:
Robbins Engineering, Inc.
6904 Parke East Blvd.
Tampa, FL 33610

REFER TO ROBBINS ENG. GENERAL NOTES AND SYMBOLS SHEET FOR ADDITIONAL SPECIFICATIONS.

NOTES:
Trusses Manufactured by:
Mayo Truss Co. Inc.
Analysis Conforms To:
FBC2007
TPI 2002
OH Loading
Soffit psf 2.0
This truss has been designed for 20.0 psf LL on the B.C. in areas where a rectangle
3- 6- 0 tall by
2- 0- 0 wide
will fit between the B.C. and any other member.
Design checked for 10 psf non-concurrent LL on BC.
NOTE: USER MODIFIED PLATES
This design may have plates selected through a plate monitor.
Wind Loads - ANSI / ASCE 7-05
Truss is designed as Components and Claddings* for Exterior zone location.
Wind Speed: 120 mph
Mean Roof Height: 15-0
Exposure Category: B
Occupancy Factor : 1.00
Building Type: Enclosed
TC Dead Load: 5.0 psf
BC Dead Load: 5.0 psf
Max comp. force 314 Lbs
Max tens. force 260 Lbs
Fabrication Tolerance = 20%
This truss is designed for a creep factor of 1.5 which is used to calculate total load deflection.

Joaquin Velez, FL Lic. #68182
Robbins Engineering
6904 Parke East Blvd
Tampa, FL, 33610
FL Cert.#5555

November 25,2009

Job	Mark	Quan	Type	Span	P1-H1	Left OH	Right OH	Engineering
JOHNSON-SPEC	P3	13	TR	100001	7	10- 3	10- 3	T3555363

SPEC LOT15 ROSEWOOD ESTATES

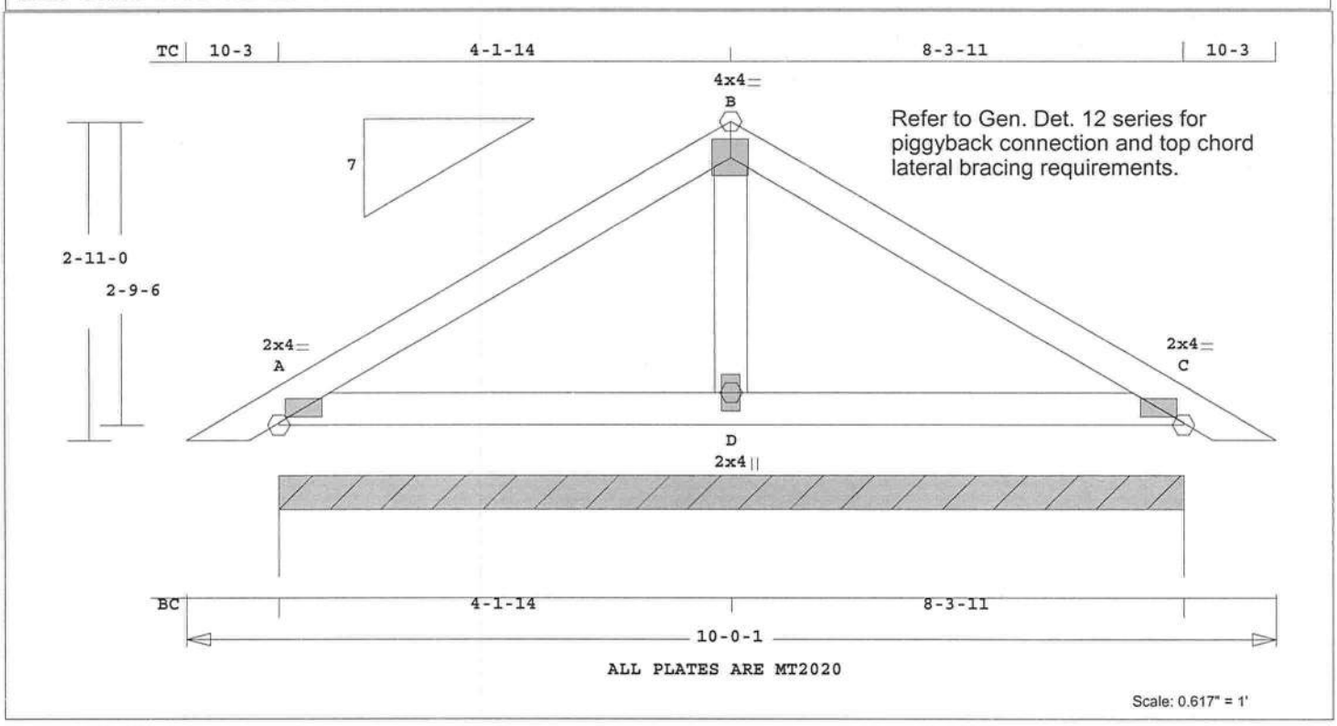

Robbins Engineering, Inc./Online Plus™ APPROX. TRUSS WEIGHT: 41.6 LBS

Online Plus -- Version 25.0.012
RUN DATE: 25-NOV-09

	CSI	-Size-	----Lumber----
TC	0.11	2x 4	SP-#2
BC	0.11	2x 4	SP-#2
WB	0.00	2x 4	SP-#2

Brace truss as follows:

	O.C.	From	To
TC	Cont.	0- 0- 0	10- 0- 1
BC	Cont.	0- 0- 0	10- 0- 1

psf-Ld	Dead	Live
TC	10.0	20.0
BC	10.0	0.0
TC+BC	20.0	20.0

Total 40.0 Spacing 24.0"
Lumber Duration Factor 1.25
Plate Duration Factor 1.25
TC Fb=1.15 Fc=1.10 Ft=1.10
BC Fb=1.10 Fc=1.10 Ft=1.10

Total Load Reactions (Lbs)

Jt	Down	Uplift	Horiz-
A	667	146 U	57 R

Jt	Brg Size	Required
A	99.7"	0"-to- 100"

Plus 9 Wind Load Case(s)
Plus 1 UBC LL Load Case(s)
Plus 1 DL Load Case(s)

Membr	CSI	P Lbs	Axl-CSI-Bnd
----------Top Chords----------			
A -B	0.11	239 C	0.00 0.11
B -C	0.11	239 C	0.00 0.11
--------Bottom Chords---------			
A -D	0.11	2 T	0.00 0.11
D -C	0.11	2 T	0.00 0.11
----------Webs----------			
D -B	0.00	49 T	

TL Defl -0.01" in A -D L/999
LL Defl 0.00" in A -D L/999
Shear // Grain in A -B 0.12

Plates for each ply each face.
Plate - MT20 20 Ga, Gross Area
Plate - MT2H 20 Ga, Gross Area

Jt	Type	Plt Size	X	Y	JSI
A	MT20	2.0x 4.0	Ctr	Ctr	0.62
B	MT20	4.0x 4.0	Ctr	Ctr	0.42
C	MT20	2.0x 4.0	Ctr	Ctr	0.62
D	MT20	2.0x 4.0	Ctr	Ctr	0.13

REVIEWED BY:
Robbins Engineering, Inc.
6904 Parke East Blvd.
Tampa, FL 33610

REFER TO ROBBINS ENG. GENERAL NOTES AND SYMBOLS SHEET FOR ADDITIONAL SPECIFICATIONS.

NOTES:
Trusses Manufactured by:
Mayo Truss Co. Inc.
Analysis Conforms To:
FBC2007
TPI 2002
OH Loading
Soffit psf 2.0
This truss has been designed for 20.0 psf LL on the B.C. in areas where a rectangle
3- 6- 0 tall by
2- 0- 0 wide
will fit between the B.C. and any other member.
Design checked for 10 psf non-concurrent LL on BC.
Refer to Gen Det 3 series for web bracing and plating.
Wind Loads - ANSI / ASCE 7-05
Truss is designed as Components and Claddings* for Exterior zone location.
Wind Speed: 120 mph
Mean Roof Height: 15-0
Exposure Category: B
Occupancy Factor : 1.00
Building Type: Enclosed
TC Dead Load: 5.0 psf
BC Dead Load: 5.0 psf
Max comp. force 239 Lbs
Max tens. force 181 Lbs
Connector Plate Fabrication Tolerance = 20%
This truss is designed for a creep factor of 1.5 which is used to calculate total load deflection.

Joaquin Velez, FL Lic. #68182
Robbins Engineering
6904 Parke East Blvd
Tampa, FL, 33610
FL Cert.#5555

November 25,2009

Job	Mark	Quan	Type	Span	Pl-Hl	Left OH	Right OH	Engineering
JOHNSON-SPEC	P4	1	HIPP	100001	7	10- 3	10- 3	T3555364

SPEC LOT15 ROSEWOOD ESTATES

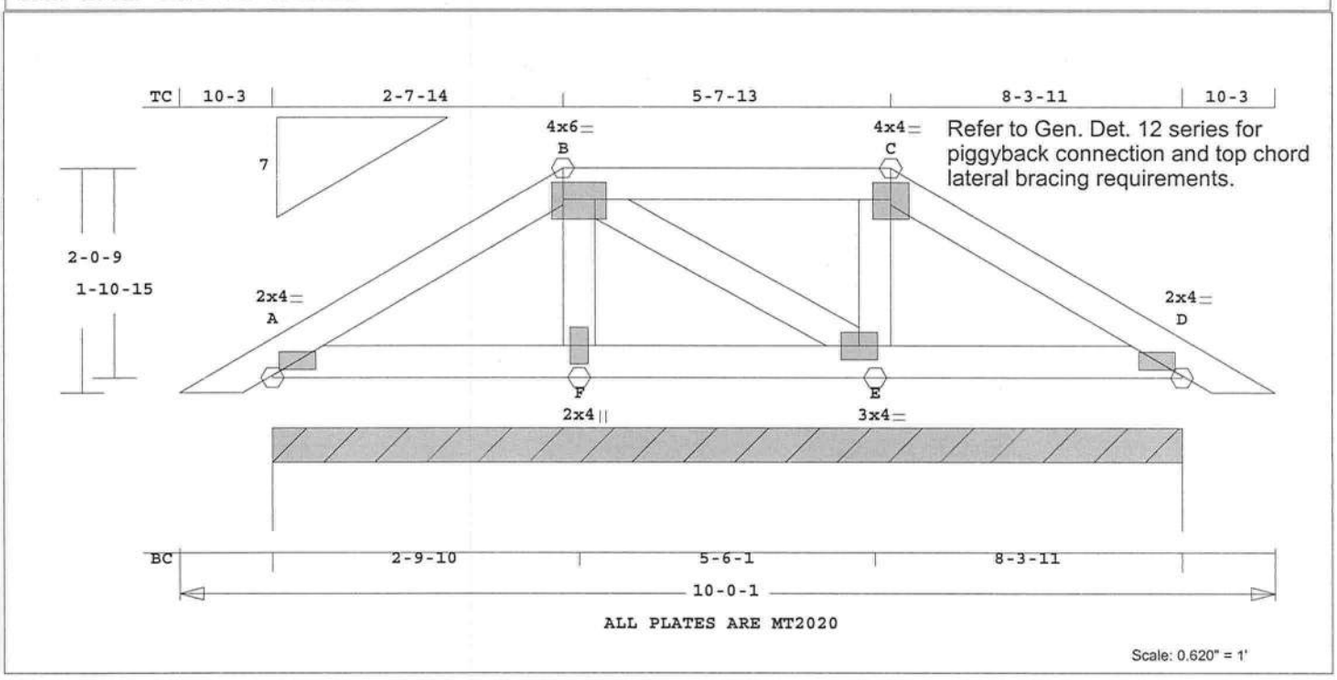

Robbins Engineering, Inc./Online Plus™ APPROX. TRUSS WEIGHT: 46.9 LBS

Online Plus -- Version 25.0.012
RUN DATE: 25-NOV-09

	CSI	-Size-	----Lumber----
TC	0.06	2x 4	SP-#2
BC	0.04	2x 4	SP-#2
WB	0.01	2x 4	SP-#2

Brace truss as follows:

	O.C.	From	To
TC	Cont.	0- 0- 0	10- 0- 1
BC	Cont.	0- 0- 0	10- 0- 1

psf-Ld	Dead	Live
TC	10.0	20.0
BC	10.0	0.0
TC+BC	20.0	20.0
Total	40.0	Spacing 24.0"

Lumber Duration Factor 1.25
Plate Duration Factor 1.25
TC Fb=1.15 Fc=1.10 Ft=1.10
BC Fb=1.10 Fc=1.10 Ft=1.10

Total Load Reactions (Lbs)

Jt	Down	Uplift	Horiz-
A	667	146 U	36 R

Jt	Brg Size	Required
A	99.7"	0"-to- 100"

Plus 9 Wind Load Case(s)
Plus 1 UBC LL Load Case(s)
Plus 1 DL Load Case(s)

Membr	CSI	P Lbs	Axl-CSI-Bnd
----------Top Chords----------			
A -B	0.04	155 C	0.00 0.04
B -C	0.06	125 T	0.01 0.05
C -D	0.04	120 C	0.00 0.04
--------Bottom Chords---------			
A -F	0.04	2 T	0.00 0.04
F -E	0.04	0 T	0.00 0.04
E -D	0.04	1 T	0.00 0.04
----------Webs----------			
F -B	0.01	128 T	
B -E	0.00	48 C	
E -C	0.01	123 T	

TL Defl 0.00" in E -D L/999
LL Defl 0.00" in E -D L/999
Shear // Grain in B -C 0.09

Plates for each ply each face.
Plate - MT20 20 Ga, Gross Area
Plate - MT2H 20 Ga, Gross Area

Jt	Type	Plt Size	X	Y	JSI
A	MT20	2.0x 4.0	Ctr	Ctr	0.62
B	MT20	4.0x 6.0	Ctr	Ctr	0.58
C	MT20	4.0x 4.0	Ctr	Ctr	0.58
D	MT20	2.0x 4.0	Ctr	Ctr	0.62
F	MT20	2.0x 4.0	Ctr	Ctr	0.13
E	MT20	3.0x 4.0	Ctr	Ctr	0.17

REVIEWED BY:
Robbins Engineering, Inc.
6904 Parke East Blvd.
Tampa, FL 33610

REFER TO ROBBINS ENG. GENERAL NOTES AND SYMBOLS SHEET FOR ADDITIONAL SPECIFICATIONS.

NOTES:
Trusses Manufactured by:
Mayo Truss Co. Inc.
Analysis Conforms To:
FBC2007
TPI 2002
OH Loading
Soffit psf 2.0
This truss has been designed for 20.0 psf LL on the B.C. in areas where a rectangle
3- 6- 0 tall by
2- 0- 0 wide
will fit between the B.C. and any other member.
Design checked for 10 psf non-concurrent LL on BC.
Wind Loads - ANSI / ASCE 7-05
Truss is designed as Components and Claddings* for Exterior zone location.
Wind Speed: 120 mph
Mean Roof Height: 15-0
Exposure Category: B
Occupancy Factor : 1.00
Building Type: Enclosed
TC Dead Load: 5.0 psf
BC Dead Load: 5.0 psf
Max comp. force 155 Lbs
Max tens. force 128 Lbs
Connector Plate Fabrication Tolerance = 20%
This truss is designed for a creep factor of 1.5 which is used to calculate total load deflection.

Joaquin Velez, FL Lic. #68182
Robbins Engineering
6904 Parke East Blvd
Tampa, FL, 33610
FL Cert.#5555

November 25,2009

Job	Mark	Quan	Type	Span	P1-H1	Left OH	Right OH	Engineering
JOHNSON-SPEC	P5	1	TR	100001	7	10- 3	10- 3	T3555365

SPEC LOT15 ROSEWOOD ESTATES

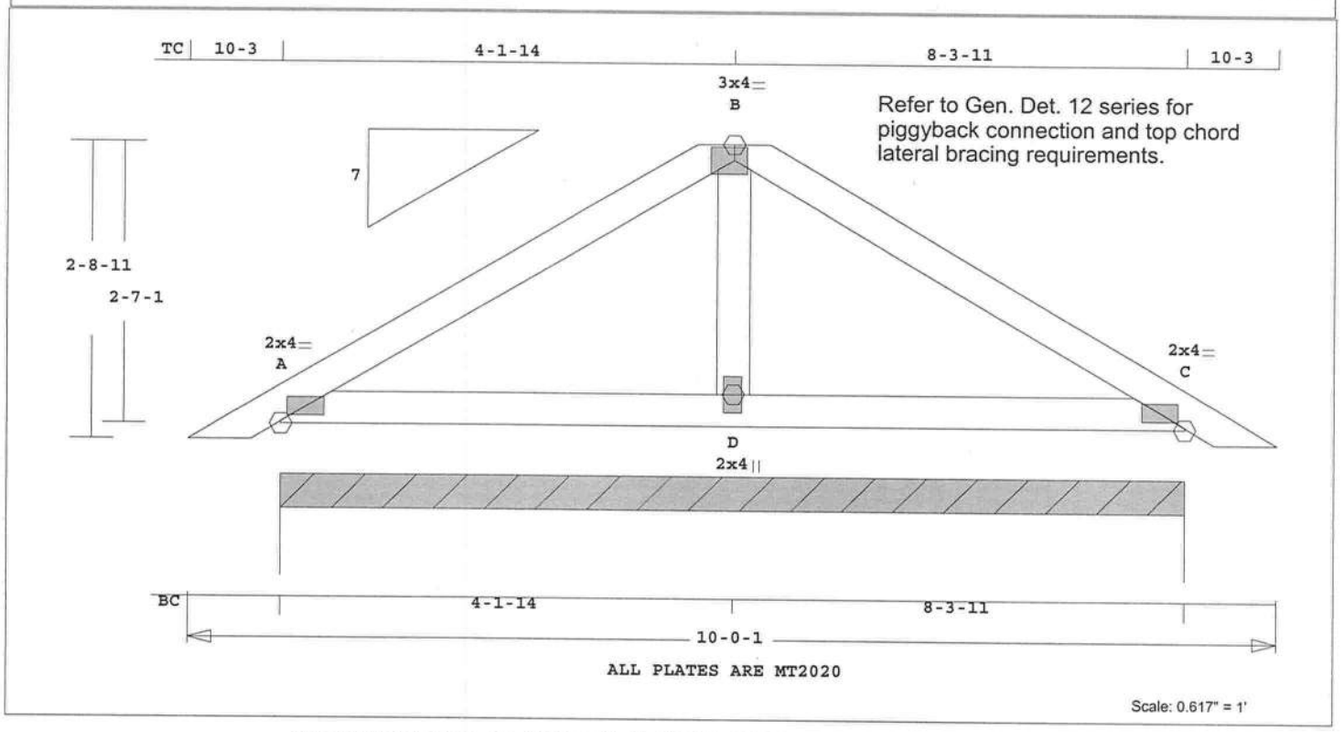

Robbins Engineering, Inc./Online Plus™ APPROX. TRUSS WEIGHT: 41.3 LBS

Online Plus -- Version 25.0.012
RUN DATE: 25-NOV-09

	CSI	-Size-	----Lumber----
TC	0.11	2x 4	SP-#2
BC	0.11	2x 4	SP-#2
WB	0.00	2x 4	SP-#2

Brace truss as follows:

	O.C.	From	To
TC	Cont.	0- 0- 0	10- 0- 1
BC	Cont.	0- 0- 0	10- 0- 1

psf-Ld	Dead	Live
TC	10.0	20.0
BC	10.0	0.0
TC+BC	20.0	20.0

Total 40.0 Spacing 24.0"
Lumber Duration Factor 1.25
Plate Duration Factor 1.25
TC Fb=1.15 Fc=1.10 Ft=1.10
BC Fb=1.10 Fc=1.10 Ft=1.10

Total Load Reactions (Lbs)

Jt	Down	Uplift	Horiz-
A	667	146 U	57 R

Jt	Brg Size	Required
A	99.7"	0"-to- 100"

Plus 9 Wind Load Case(s)
Plus 1 UBC LL Load Case(s)
Plus 1 DL Load Case(s)

Membr	CSI	P Lbs	Axl-CSI-Bnd
----------Top Chords----------			
A -B	0.11	239 C	0.00 0.11
B -C	0.11	239 C	0.00 0.11
--------Bottom Chords---------			
A -D	0.11	2 T	0.00 0.11
D -C	0.11	2 T	0.00 0.11
----------Webs----------			
D -B	0.00	49 T	

TL Defl -0.01" in A -D L/999
LL Defl 0.00" in A -D L/999
Shear // Grain in A -B 0.12

Plates for each ply each face.
Plate - MT20 20 Ga, Gross Area
Plate - MT2H 20 Ga, Gross Area

Jt	Type	Plt Size	X	Y	JSI
A	MT20	2.0x 4.0	Ctr	Ctr	0.62
B	MT20	3.0x 4.0-0.5	Ctr	Ctr	0.56
C	MT20	2.0x 4.0	Ctr	Ctr	0.62
D	MT20	2.0x 4.0	Ctr	Ctr	0.13

REVIEWED BY:
Robbins Engineering, Inc.
6904 Parke East Blvd.
Tampa, FL 33610

REFER TO ROBBINS ENG. GENERAL NOTES AND SYMBOLS SHEET FOR ADDITIONAL SPECIFICATIONS.

NOTES:
Trusses Manufactured by:
Mayo Truss Co. Inc.
Analysis Conforms To:
FBC2007
TPI 2002
OH Loading
Soffit psf 2.0
This truss has been designed for 20.0 psf LL on the B.C. in areas where a rectangle
3- 6- 0 tall by
2- 0- 0 wide
will fit between the B.C. and any other member.
Design checked for 10 psf non-concurrent LL on BC.
Refer to Gen Det 3 series for web bracing and plating.
Wind Loads - ANSI / ASCE 7-05
Truss is designed as Components and Claddings* for Exterior zone location.
Wind Speed: 120 mph
Mean Roof Height: 15-0
Exposure Category: B
Occupancy Factor : 1.00
Building Type: Enclosed
TC Dead Load: 5.0 psf
BC Dead Load: 5.0 psf
Max comp. force 239 Lbs
Max tens. force 181 Lbs
Connector Plate Fabrication Tolerance = 20%
This truss is designed for a creep factor of 1.5 which is used to calculate total load deflection.

Joaquin Velez, FL Lic. #68182
Robbins Engineering
6904 Parke East Blvd
Tampa, FL, 33610
FL Cert.#5555

November 25,2009

Job	Mark	Quan	Type	Span	P1-H1	Left OH	Right OH	Engineering
JOHNSON-SPEC	P6	1	HIPP	100001	7	10- 3	10- 3	T3555366

SPEC LOT15 ROSEWOOD ESTATES

Refer to Gen. Det. 12 series for piggyback connection and top chord lateral bracing requirements.

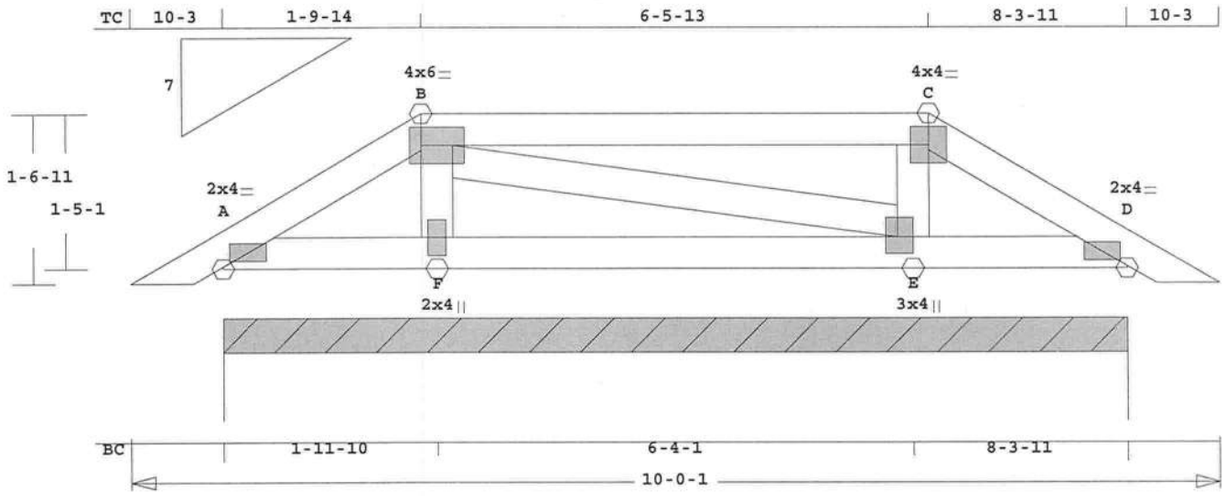

ALL PLATES ARE MT2020

Scale: 0.617" = 1'

Robbins Engineering, Inc./Online Plus™ APPROX. TRUSS WEIGHT: 47.2 LBS

Online Plus -- Version 25.0.012
RUN DATE: 25-NOV-09

	CSI	-Size-	----Lumber----
TC	0.17	2x 4	SP-#2
BC	0.08	2x 4	SP-#2
WB	0.04	2x 4	SP-#2

Brace truss as follows:

	O.C.	From	To
TC	Cont.	0- 0- 0	10- 0- 1
BC	Cont.	0- 0- 0	10- 0- 1

psf-Ld	Dead	Live
TC	10.0	20.0
BC	10.0	0.0
TC+BC	20.0	20.0
Total	40.0	Spacing 24.0"

Lumber Duration Factor 1.25
Plate Duration Factor 1.25
TC Fb=1.15 Fc=1.10 Ft=1.10
BC Fb=1.10 Fc=1.10 Ft=1.10

Total Load Reactions (Lbs)

Jt	Down	Uplift	Horiz-
A	667	146 U	24 R

Jt	Brg Size	Required
A	99.7"	0"-to- 100"

Plus 9 Wind Load Case(s)
Plus 1 UBC LL Load Case(s)
Plus 1 DL Load Case(s)

Membr	CSI	P Lbs	Axl-CSI-Bnd
----------Top Chords----------			
A -B	0.02	105 C	0.00 0.02
B -C	0.17	97 T	0.01 0.16
C -D	0.04	67 C	0.00 0.04
--------Bottom Chords---------			
A -F	0.08	3 T	0.00 0.08
F -E	0.08	0 T	0.00 0.08
E -D	0.08	2 T	0.00 0.08
----------Webs----------			
F -B	0.04	322 T	
B -E	0.03	130 C	
E -C	0.02	206 T	

TL Defl -0.01" in F -E L/999
LL Defl -0.01" in F -E L/999
Shear // Grain in B -C 0.16

Plates for each ply each face.
Plate - MT20 20 Ga, Gross Area
Plate - MT2H 20 Ga, Gross Area

Jt	Type	Plt Size	X	Y	JSI
A	MT20	2.0x 4.0	Ctr	Ctr	0.62
B	MT20	4.0x 6.0	Ctr	Ctr	0.58
C	MT20	4.0x 4.0	Ctr	Ctr	0.58
D	MT20	2.0x 4.0	Ctr	Ctr	0.62
F	MT20	2.0x 4.0	Ctr	Ctr	0.26
E	MT20	3.0x 4.0-1.5	0.2		0.19

REVIEWED BY:
Robbins Engineering, Inc.
6904 Parke East Blvd.
Tampa, FL 33610

REFER TO ROBBINS ENG. GENERAL NOTES AND SYMBOLS SHEET FOR ADDITIONAL SPECIFICATIONS.

NOTES:
Trusses Manufactured by:
Mayo Truss Co. Inc.
Analysis Conforms To:
FBC2007
TPI 2002
OH Loading
Soffit psf 2.0
This truss has been designed for 20.0 psf LL on the B.C. in areas where a rectangle
3- 6- 0 tall by
2- 0- 0 wide
will fit between the B.C. and any other member.
Design checked for 10 psf non-concurrent LL on BC.
Wind Loads - ANSI / ASCE 7-05
Truss is designed as Components and Claddings* for Exterior zone location.
Wind Speed: 120 mph
Mean Roof Height: 15-0
Exposure Category: B
Occupancy Factor : 1.00
Building Type: Enclosed
TC Dead Load: 5.0 psf
BC Dead Load: 5.0 psf
Max comp. force 250 Lbs
Max tens. force 322 Lbs
Connector Plate Fabrication Tolerance = 20%
This truss is designed for a creep factor of 1.5 which is used to calculate total load deflection.

Joaquin Velez, FL Lic. #68182
Robbins Engineering
6904 Parke East Blvd
Tampa, FL, 33610
FL Cert.#5555

November 25,2009

ROBBINS ENG. GENERAL NOTES & SYMBOLS

PLATE LOCATION

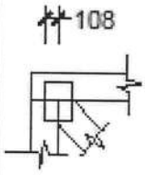

Center plates on joints unless otherwise noted in plate list or on drawing. Dimensions are given in inches (i.e. 1 1/2" or 1.5") or IN-16ths (i.e. 108)

FLOOR TRUSS SPLICE

(3X2, 4X2, 6X2)

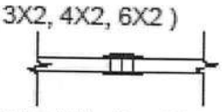

(W) = Wide Face Plate
(N) = Narrow Face Plate

LATERAL BRACING

Designates the location for continuous lateral bracing (CLB) for support of individual truss members only. CLBs must be properly anchored or restrained to prevent simultaneous buckling of adjacent truss members.

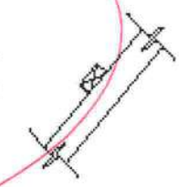

PLATE SIZE AND ORIENTATION

3x5 ||

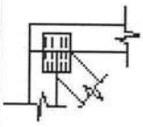

The first dimension is the width measured perpendicular to slots. The second dimension is the length measured parallel to slots. Plate orientation, shown next to plate size, indicates direction of slots in connector plates.

DIMENSIONS

All dimensions are shown in FT-IN-SX (i.e. 6' 8 1/2" or 6-08-08). Dimensions less than one foot are shown in IN-SX only (i.e. 708).

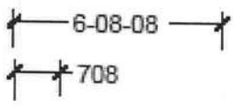

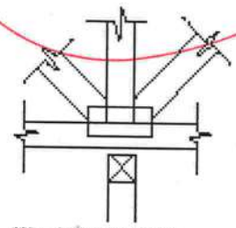

W = Actual Bearing Width (IN-SX)
R = Reaction (lbs.)
U = Uplift (lbs.)

BEARING

When truss is designed to bear on multiple supports, interior bearing locations should be marked on the truss. Interior support or temporary shoring must be in place before erecting this truss. If necessary, shim bearings to assure solid contact with truss.

ROBBINS connector plates shall be applied on both faces of truss at each joint. Center the plates, unless indicated otherwise. No loose knots or wane in plate contact area. Splice only where shown. Overall spans assume 4" bearing at each end, unless indicated otherwise. Cutting and fabrication shall be performed using equipment which produces snug-fitting joints and plates. Unless otherwise noted, moisture content of lumber shall not exceed 19% at time of fabrication and the attached truss designs are not applicable for use with fire retardant lumber and some preservative treatments. Nails specified on truss design drawings refer to common wire nails, except as noted.
The attached design drawings were prepared in accordance with " National Design Specifications for Wood Construction" (AF & PA)," National Design Standard for Metal Plate Connected Wood Truss Construction" (ANSI/TPI 1), and HUD Design Criteria for Trussed Rafters.

Robbins Eng. Co. bears no responsibility for the erection of trusses, field bracing or permanent truss bracing. Refer to BCSI 1-03 as published by Truss Plate Institute, 218 North Lee Street, Suite 312, Alexandria, Virginia 22314. Persons erecting trusses are cautioned to seek professional advice concerning proper erection bracing to prevent toppling and " dominoing ". Care should be taken to prevent damage during fabrication, storage, shipping and erection. Top and bottom chords shall be adequately braced in the absence of sheathing or rigid ceiling, respectively. It is the responsibility of others to ascertain that design loads utilized on these drawings meet or exceed the actual dead loads imposed by the structure and the live loads imposed by the local building code or historical climatic records.

FURNISH A COPY OF THE ATTACHED TRUSS DESIGN DRAWINGS TO ERECTION CONTRACTOR. IT IS THE RESPONSIBILITY OF THE BUILDING DESIGNER TO REVIEW THESE DRAWINGS AND VERIFY THAT DATA, INCLUDING DIMENSIONS & LOADS, CONFORM TO ARCHITECTURAL PLAN / SPECS AND THE TRUSS PLACEMENT DIAGRAM FURNISHED BY THE TRUSS FABRICATOR.

Robbins Engineering, Inc.

6904 Parke East Blvd.
Tampa, Fl 33610-4115
Tel: 813-972-1135 Fax: 813-971-6117

www.robbinseng.com

Job	Mark	Quan	Type	Span	P1-H1	Left OH	Right OH	Engineering
JOHNSON-SPEC	B8	1	SP	160111	4.95	0	2- 0- 0	T3555342

SPEC LOT15 ROSEWOOD ESTATES

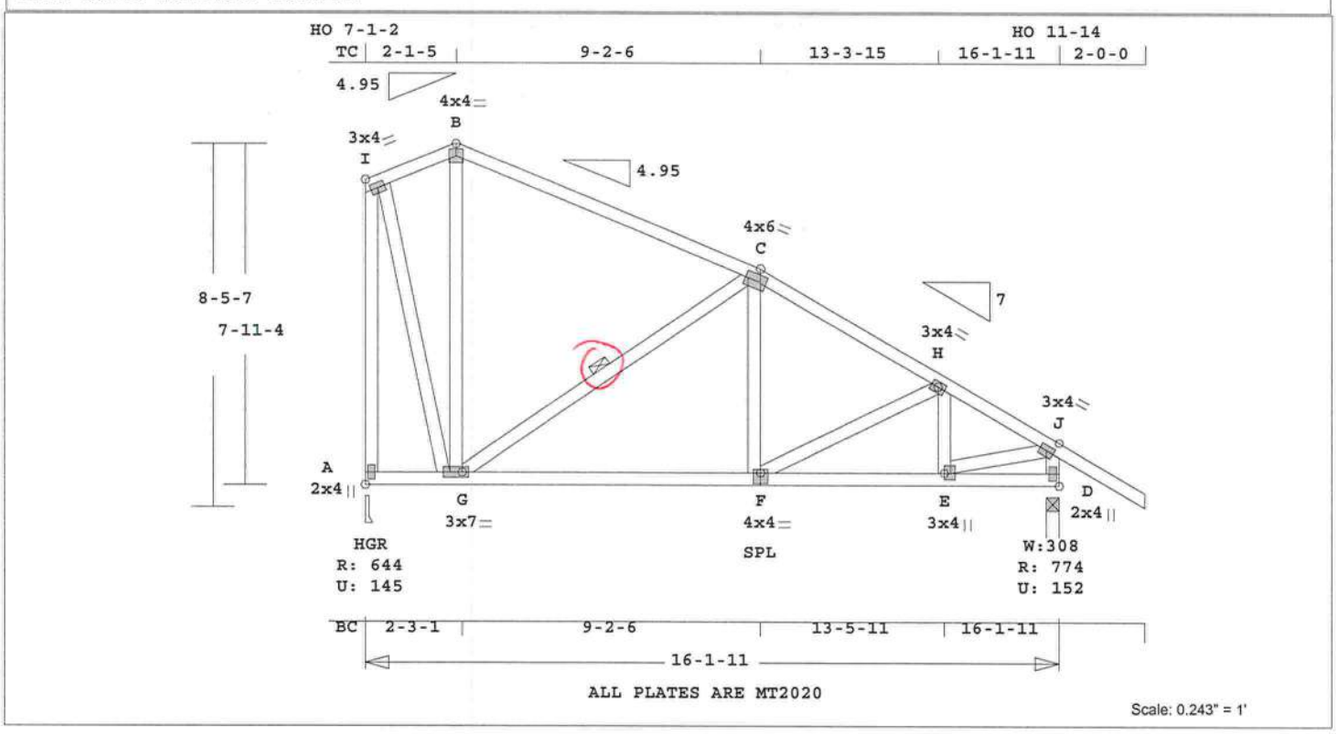

Robbins Engineering, Inc./Online Plus™ APPROX. TRUSS WEIGHT: 150.5 LBS

Online Plus -- Version 25.0.012
RUN DATE: 25-NOV-09

	CSI	-Size-	----Lumber----
TC	0.45	2x 4	SP-#2
BC	0.27	2x 4	SP-#2
WB	0.47	2x 4	SP-#2

Brace truss as follows:

	O.C.	From	To
TC	Cont.	0- 0- 0	16- 1-11
BC	Cont.	0- 0- 0	16- 1-11

One Continuous Lateral Brace
G -C
Attach CLB with (2)-10d nails
at each web.

psf-Ld	Dead	Live
TC	10.0	20.0
BC	10.0	0.0
TC+BC	20.0	20.0

Total 40.0 Spacing 24.0"
Lumber Duration Factor 1.25
Plate Duration Factor 1.25
TC Fb=1.15 Fc=1.10 Ft=1.10
BC Fb=1.10 Fc=1.10 Ft=1.10

Total Load Reactions (Lbs)

Jt	Down	Uplift	Horiz-
A	644	146 U	303 R
D	775	153 U	160 R

Jt	Brg Size	Required
A	3.5"	1.5"
D	3.5"	1.5"

Plus 9 Wind Load Case(s)
Plus 1 UBC LL Load Case(s)
Plus 1 DL Load Case(s)

Membr	CSI	P Lbs	Axl-CSI-Bnd	
----------Top Chords----------				
I -B	0.29	315 T	0.04	0.25
B -C	0.45	278 T	0.03	0.42
C -H	0.25	636 C	0.05	0.20
H -J	0.10	709 C	0.00	0.10
--------Bottom Chords---------				
A -G	0.20	226 T	0.00	0.20
G -F	0.26	555 T	0.05	0.21
F -E	0.27	616 T	0.06	0.21
E -D	0.03	148 T	0.00	0.03

----------Webs----------				
A -I	0.47	654 C	WindLd	
I -G	0.28	614 T		
G -B	0.18	227 T		
G -C	0.13	467 C		1 Br
F -C	0.04	268 T		
F -H	0.05	150 C		
E -H	0.01	126 C		
E -J	0.11	643 T		
D -J	0.06	749 C	WindLd	

TL Defl -0.11" in G -F L/999
LL Defl -0.05" in G -F L/999
Shear // Grain in B -C 0.29

Plates for each ply each face.
Plate - MT20 20 Ga, Gross Area
Plate - MT2H 20 Ga, Gross Area

Jt	Type	Plt Size	X	Y	JSI
I	MT20	3.0x 4.0	Ctr	Ctr	0.49
B	MT20	4.0x 4.0	Ctr	Ctr	0.44
C	MT20	4.0x 6.0-1.4	0.6		0.58
H	MT20	3.0x 4.0	Ctr	Ctr	0.48
J	MT20	3.0x 4.0	Ctr	Ctr	0.40
A	MT20	2.0x 4.0	Ctr	Ctr	0.40
G	MT20	3.0x 7.0	Ctr	Ctr	0.65
F	MT20	4.0x 4.0	Ctr-1.0		0.65
E	MT20	3.0x 4.0	1.5	0.3	0.62
D	MT20	2.0x 4.0	Ctr	Ctr	0.39

REVIEWED BY:
Robbins Engineering, Inc.
6904 Parke East Blvd.
Tampa, FL 33610

REFER TO ROBBINS ENG. GENERAL NOTES AND SYMBOLS SHEET FOR ADDITIONAL SPECIFICATIONS.

NOTES:
Trusses Manufactured by:
Mayo Truss Co. Inc.
Analysis Conforms To:
FBC2007
TPI 2002
OH Loading
Soffit psf 2.0
This truss has been designed for 20.0 psf LL on the B.C. in areas where a rectangle 3- 6- 0 tall by 2- 0- 0 wide will fit between the B.C. and any other member.
Design checked for 10 psf non-concurrent LL on BC.
Wind Loads - ANSI / ASCE 7-05
Truss is designed as Components and Claddings* for Exterior zone location.
Wind Speed: 120 mph
Mean Roof Height: 15-0
Exposure Category: B
Occupancy Factor : 1.00
Building Type: Enclosed
TC Dead Load: 5.0 psf
BC Dead Load: 5.0 psf
Max comp. force 749 Lbs
Max tens. force 643 Lbs
Connector Plate Fabrication Tolerance = 20%
This truss is designed for a creep factor of 1.5 which is used to calculate total load deflection.

Joaquin Velez, FL Lic. #68182
Robbins Engineering
6904 Parke East Blvd
Tampa, FL, 33610
FL Cert.#5555

November 25,2009

Job	Mark	Quan	Type	Span	P1-H1	Left OH	Right OH	Engineering
JOHNSON-SPEC	B9	1	SP	140111	7	0	2- 0- 0	T3555343

SPEC LOT15 ROSEWOOD ESTATES

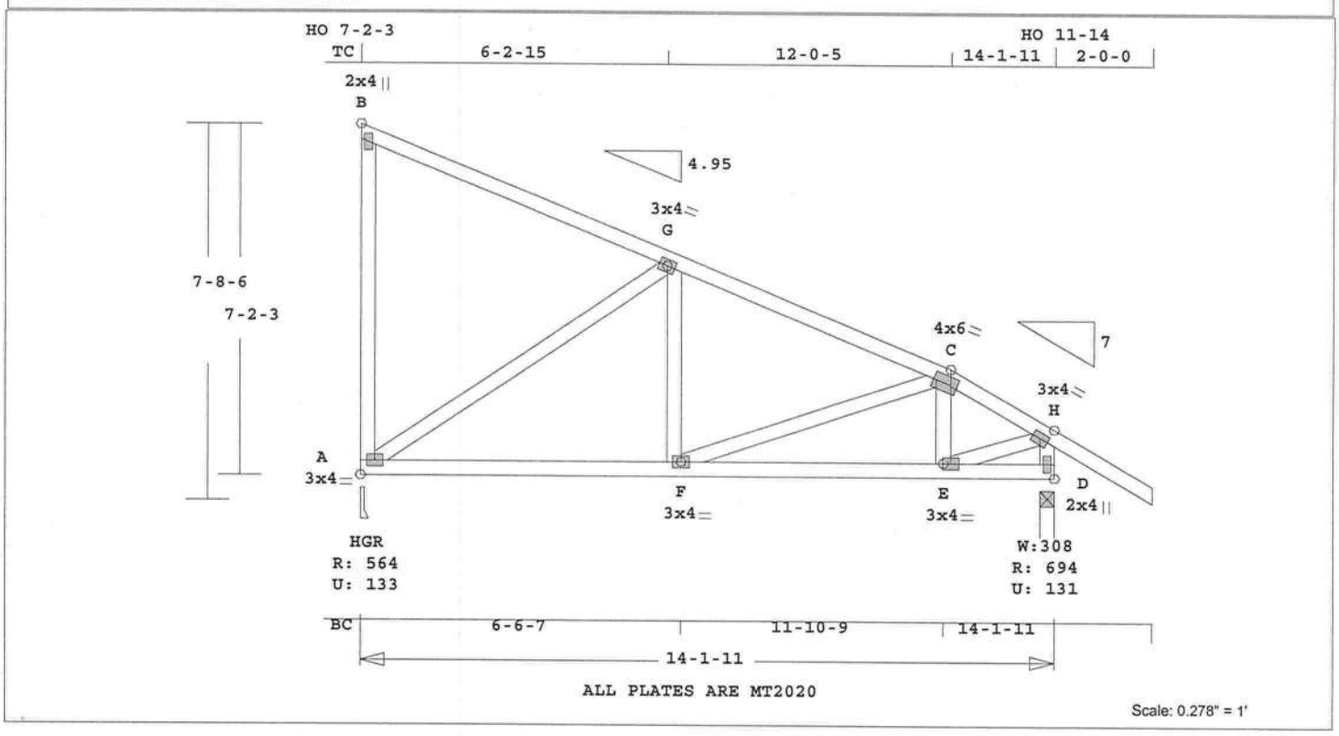

Robbins Engineering, Inc./Online Plus™ APPROX. TRUSS WEIGHT: 112.6 LBS

Online Plus -- Version 25.0.012
RUN DATE: 25-NOV-09

	CSI	-Size-	----Lumber----
TC	0.47	2x 4	SP-#2
BC	0.29	2x 4	SP-#2
WB	0.53	2x 4	SP-#2

Brace truss as follows:

	O.C.	From	To
TC	Cont.	0- 0- 0	14- 1-11
BC	Cont.	0- 0- 0	14- 1-11

psf-Ld	Dead	Live
TC	10.0	20.0
BC	10.0	0.0
TC+BC	20.0	20.0

Total 40.0 Spacing 24.0"
Lumber Duration Factor 1.25
Plate Duration Factor 1.25
TC Fb=1.15 Fc=1.10 Ft=1.10
BC Fb=1.10 Fc=1.10 Ft=1.10

Total Load Reactions (Lbs)

Jt	Down	Uplift	Horiz-
A	564	134 U	288 R
D	695	131 U	34 R

Jt	Brg Size	Required
A	3.5"	1.5"
D	3.5"	1.5"

Plus 8 Wind Load Case(s)
Plus 1 UBC LL Load Case(s)
Plus 1 DL Load Case(s)

Membr	CSI	P Lbs	Axl-CSI-Bnd
----------Top Chords----------			
B -G	0.44	136 C	0.00 0.44
G -C	0.47	547 C	0.04 0.43
C -H	0.08	601 C	0.04 0.04
--------Bottom Chords---------			
A -F	0.29	520 T	0.05 0.24
F -E	0.29	528 T	0.05 0.24
E -D	0.07	22 T	0.00 0.07
----------Webs----------			
A -B	0.33	192 T	WindLd
A -G	0.53	629 C	
F -G	0.04	284 T	
F -C	0.01	76 T	
E -C	0.01	123 T	
E -H	0.10	554 T	
D -H	0.06	679 C	WindLd

TL Defl -0.09" in A -F L/999
LL Defl -0.04" in A -F L/999
Shear // Grain in B -G 0.27

Plates for each ply each face.
Plate - MT20 20 Ga, Gross Area
Plate - MT2H 20 Ga, Gross Area

Jt	Type	Plt Size	X	Y	JSI
B	MT20	2.0x 4.0	Ctr	Ctr	0.14
G	MT20	3.0x 4.0	Ctr	Ctr	0.30
C	MT20	4.0x 6.0-1.4	0.6		0.58
H	MT20	3.0x 4.0	Ctr	Ctr	0.46
A	MT20	3.0x 4.0	Ctr	Ctr	0.41
F	MT20	3.0x 4.0	Ctr	Ctr	0.21
E	MT20	3.0x 4.0	Ctr	Ctr	0.39
D	MT20	2.0x 4.0	Ctr	Ctr	0.34

REVIEWED BY:
Robbins Engineering, Inc.
6904 Parke East Blvd.
Tampa, FL 33610

REFER TO ROBBINS ENG. GENERAL NOTES AND SYMBOLS SHEET FOR ADDITIONAL SPECIFICATIONS.

NOTES:
Trusses Manufactured by:
Mayo Truss Co. Inc.
Analysis Conforms To:
FBC2007
TPI 2002
OH Loading
Soffit psf 2.0
This truss has been designed for 20.0 psf LL on the B.C. in areas where a rectangle 3- 6- 0 tall by 2- 0- 0 wide will fit between the B.C. and any other member.
Design checked for 10 psf non-concurrent LL on BC.
Wind Loads - ANSI / ASCE 7-05
Truss is designed as Components and Claddings* for Exterior zone location.
Wind Speed: 120 mph
Mean Roof Height: 15-0
Exposure Category: B
Occupancy Factor : 1.00
Building Type: Enclosed
TC Dead Load: 5.0 psf
BC Dead Load: 5.0 psf
Max comp. force 679 Lbs
Max tens. force 554 Lbs
Connector Plate Fabrication Tolerance = 20%
This truss is designed for a creep factor of 1.5 which is used to calculate total load deflection.

Joaquin Velez, FL Lic. #68182
Robbins Engineering
6904 Parke East Blvd
Tampa, FL, 33610
FL Cert.#5555

November 25,2009

Job	Mark	Quan	Type	Span	Pl-Hl	Left OH	Right OH	Engineering
JOHNSON-SPEC	B10	1	SP	110003	4.95	0	0	T3555344

SPEC LOT15 ROSEWOOD ESTATES

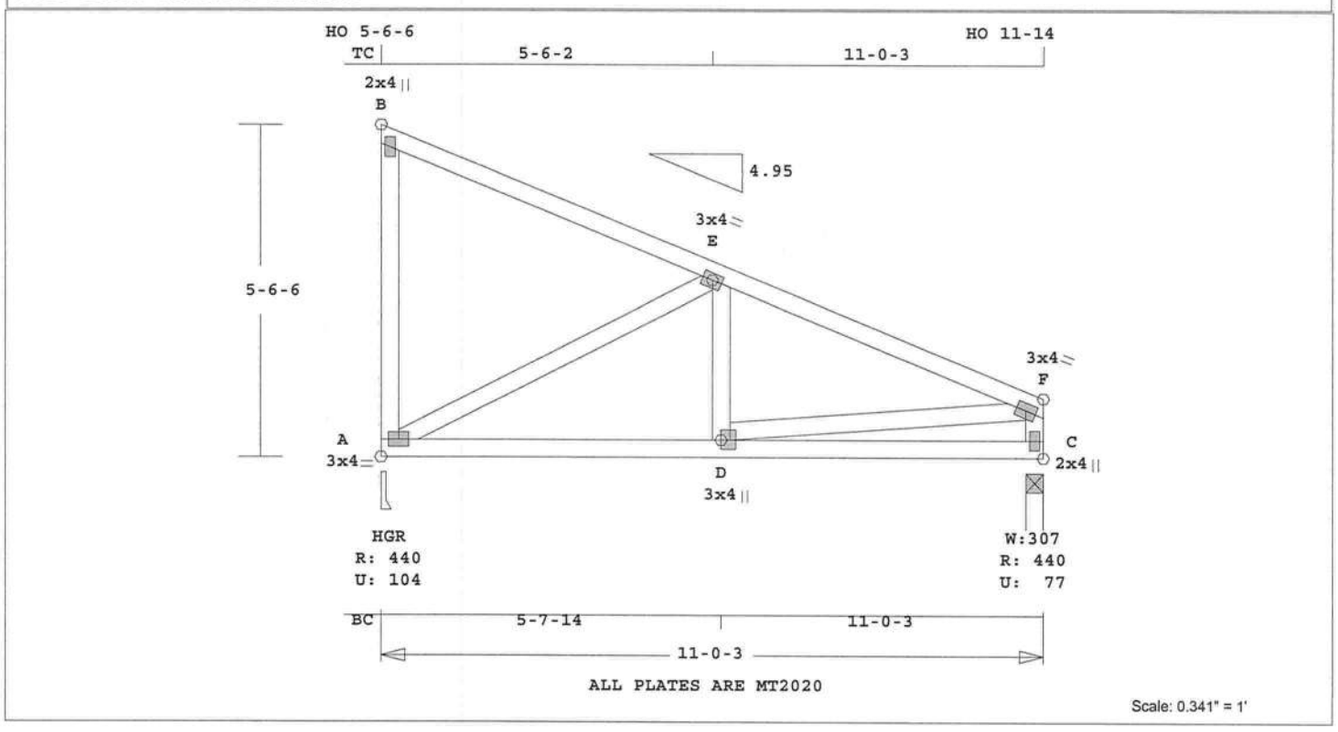

Robbins Engineering, Inc./Online Plus™ APPROX. TRUSS WEIGHT: 79.2 LBS

Online Plus -- Version 25.0.012
RUN DATE: 25-NOV-09

	CSI	-Size-	----Lumber----
TC	0.44	2x 4	SP-#2
BC	0.26	2x 4	SP-#2
WB	0.31	2x 4	SP-#2

Brace truss as follows:

	O.C.	From	To
TC	Cont.	0- 0- 0	11- 0- 3
BC	Cont.	0- 0- 0	11- 0- 3

psf-Ld	Dead	Live
TC	10.0	20.0
BC	10.0	0.0
TC+BC	20.0	20.0
Total	40.0	Spacing 24.0"

Lumber Duration Factor 1.25
Plate Duration Factor 1.25
TC Fb=1.15 Fc=1.10 Ft=1.10
BC Fb=1.10 Fc=1.10 Ft=1.10

Total Load Reactions (Lbs)

Jt	Down	Uplift	Horiz-
A	441	104 U	217 R
C	441	77 U	7 R

Jt	Brg Size	Required
A	3.5"	1.5"
C	3.4"	1.5"

Plus 7 Wind Load Case(s)
Plus 1 UBC LL Load Case(s)
Plus 1 DL Load Case(s)

Membr	CSI	P Lbs	Axl-CSI-Bnd
----------Top Chords----------			
B -E	0.40	102 C	0.00 0.40
E -F	0.44	513 C	0.04 0.40
--------Bottom Chords---------			
A -D	0.26	488 T	0.05 0.21
D -C	0.21	21 T	0.00 0.21
----------Webs----------			
A -B	0.21	203 T	WindLd
A -E	0.31	552 C	
D -E	0.03	212 T	
D -F	0.09	493 T	
C -F	0.03	397 C	WindLd

TL Defl -0.05" in A -D L/999
LL Defl -0.02" in A -D L/999
Shear // Grain in B -E 0.26

Plates for each ply each face.
Plate - MT20 20 Ga, Gross Area
Plate - MT2H 20 Ga, Gross Area

Jt	Type	Plt Size	X	Y	JSI
B	MT20	2.0x 4.0	Ctr	Ctr	0.14
E	MT20	3.0x 4.0	Ctr	Ctr	0.28
F	MT20	3.0x 4.0	Ctr	Ctr	0.31
A	MT20	3.0x 4.0	Ctr	Ctr	0.37
D	MT20	3.0x 4.0	1.5	0.1	0.50
C	MT20	2.0x 4.0	Ctr	Ctr	0.22

REVIEWED BY:
Robbins Engineering, Inc.
6904 Parke East Blvd.
Tampa, FL 33610

REFER TO ROBBINS ENG. GENERAL NOTES AND SYMBOLS SHEET FOR ADDITIONAL SPECIFICATIONS.

NOTES:
Trusses Manufactured by:
Mayo Truss Co. Inc.
Analysis Conforms To:
FBC2007
TPI 2002
This truss has been designed for 20.0 psf LL on the B.C. in areas where a rectangle
3- 6- 0 tall by
2- 0- 0 wide
will fit between the B.C. and any other member.
Design checked for 10 psf non-concurrent LL on BC.
Wind Loads - ANSI / ASCE 7-05
Truss is designed as Components and Claddings* for Exterior zone location.
Wind Speed: 120 mph

Mean Roof Height: 15-0
Exposure Category: B
Occupancy Factor : 1.00
Building Type: Enclosed
TC Dead Load: 5.0 psf
BC Dead Load: 5.0 psf
Max comp. force 552 Lbs
Max tens. force 499 Lbs
Connector Plate Fabrication Tolerance = 20%
This truss is designed for a creep factor of 1.5 which is used to calculate total load deflection.

Joaquin Velez, FL Lic. #68182
Robbins Engineering
6904 Parke East Blvd
Tampa, FL, 33610
FL Cert.#5555

November 25,2009

Job	Mark	Quan	Type	Span	P1-H1	Left OH	Right OH	Engineering
JOHNSON-SPEC	B11	1	SP	70003	4.95	0	0	T3555345

SPEC LOT15 ROSEWOOD ESTATES

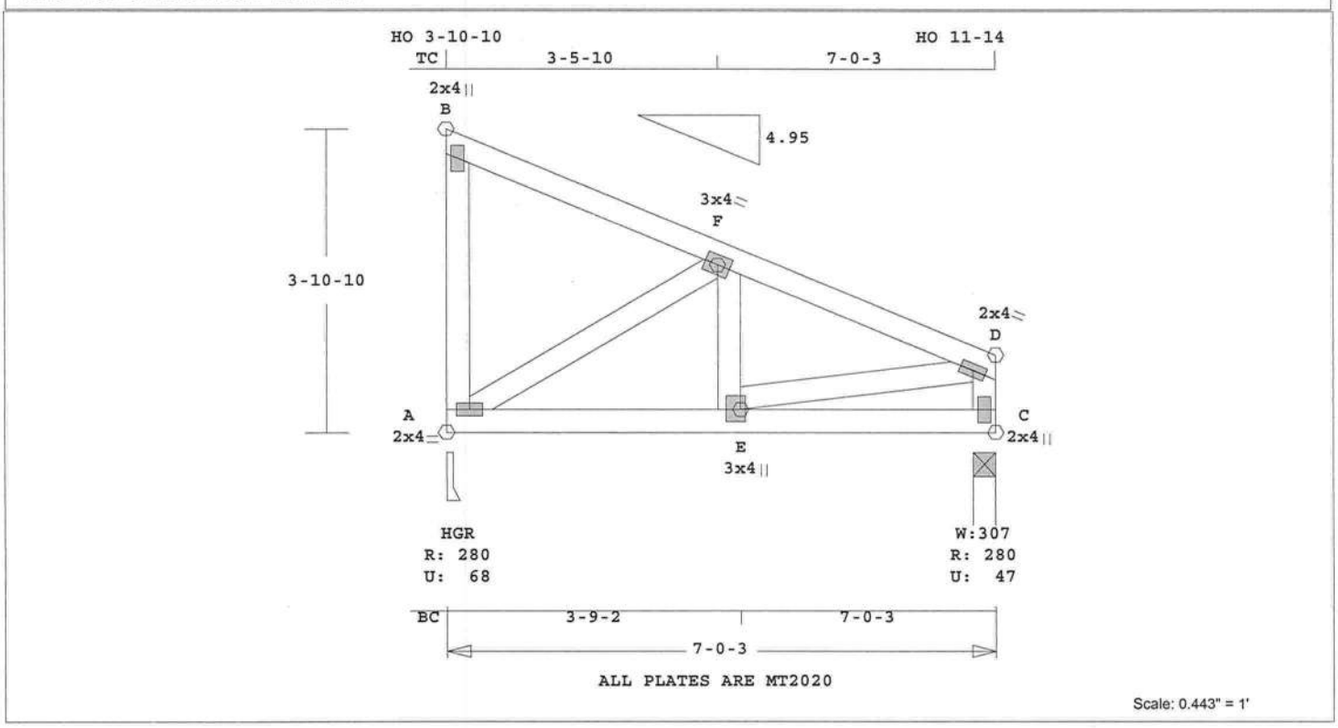

Robbins Engineering, Inc./Online Plus™ APPROX. TRUSS WEIGHT: 51.0 LBS

Online Plus -- Version 25.0.012
RUN DATE: 25-NOV-09

	CSI	-Size-	----Lumber----
TC	0.22	2x 4	SP-#2
BC	0.09	2x 4	SP-#2
WB	0.11	2x 4	SP-#2

Brace truss as follows:

	O.C.	From	To
TC	Cont.	0- 0- 0	7- 0- 3
BC	Cont.	0- 0- 0	7- 0- 3

psf-Ld	Dead	Live
TC	10.0	20.0
BC	10.0	0.0
TC+BC	20.0	20.0

Total 40.0 Spacing 24.0"
Lumber Duration Factor 1.25
Plate Duration Factor 1.25
TC Fb=1.15 Fc=1.10 Ft=1.10
BC Fb=1.10 Fc=1.10 Ft=1.10

Total Load Reactions (Lbs)

Jt	Down	Uplift	Horiz-
A	281	69 U	146 R
C	281	47 U	12 R

Jt	Brg Size	Required
A	3.5"	1.5"
C	3.4"	1.5"

Plus 7 Wind Load Case(s)
Plus 1 UBC LL Load Case(s)
Plus 1 DL Load Case(s)

Membr	CSI	P Lbs	Axl-CSI-Bnd	
----------Top Chords----------				
B -F	0.20	71 C	0.00	0.20
F -D	0.22	275 C	0.02	0.20
--------Bottom Chords---------				
A -E	0.09	262 T	0.02	0.07
E -C	0.07	23 T	0.00	0.07
----------Webs----------				
A -B	0.11	172 T	WindLd	
A -F	0.07	388 T		
E -F	0.01	118 T		
E -D	0.04	269 T		
C -D	0.02	251 C	WindLd	

TL Defl -0.01" in A -E L/999
LL Defl 0.00" in A -E L/999
Shear // Grain in B -F 0.23

Plates for each ply each face.
Plate - MT20 20 Ga, Gross Area
Plate - MT2H 20 Ga, Gross Area

Jt	Type	Plt Size	X	Y	JSI
B	MT20	2.0x 4.0	Ctr	Ctr	0.12
F	MT20	3.0x 4.0	Ctr	Ctr	0.21
D	MT20	2.0x 4.0	Ctr	Ctr	0.28
A	MT20	2.0x 4.0	Ctr	Ctr	0.34
E	MT20	3.0x 4.0	1.0	0.1	0.45
C	MT20	2.0x 4.0	Ctr	Ctr	0.16

REVIEWED BY:
Robbins Engineering, Inc.
6904 Parke East Blvd.
Tampa, FL 33610

REFER TO ROBBINS ENG. GENERAL NOTES AND SYMBOLS SHEET FOR ADDITIONAL SPECIFICATIONS.

NOTES:
Trusses Manufactured by:
Mayo Truss Co. Inc.
Analysis Conforms To:
FBC2007
TPI 2002
This truss has been designed for 20.0 psf LL on the B.C. in areas where a rectangle
3- 6- 0 tall by
2- 0- 0 wide
will fit between the B.C. and any other member.
Design checked for 10 psf non-concurrent LL on BC.
Wind Loads - ANSI / ASCE 7-05
Truss is designed as Components and Claddings* for Exterior zone location.
Wind Speed: 120 mph

Mean Roof Height: 15-0
Exposure Category: B
Occupancy Factor : 1.00
Building Type: Enclosed
TC Dead Load: 5.0 psf
BC Dead Load: 5.0 psf
Max comp. force 306 Lbs
Max tens. force 388 Lbs
Connector Plate Fabrication Tolerance = 20%
This truss is designed for a creep factor of 1.5 which is used to calculate total load deflection.

Joaquin Velez, FL Lic. #68182
Robbins Engineering
6904 Parke East Blvd
Tampa, FL, 33610
FL Cert.#5555

November 25,2009

Job	Mark	Quan	Type	Span	P1-H1	Left OH	Right OH	Engineering
JOHNSON-SPEC	B12	1	SP	30003	4.95	0	0	T3555346

SPEC LOT15 ROSEWOOD ESTATES

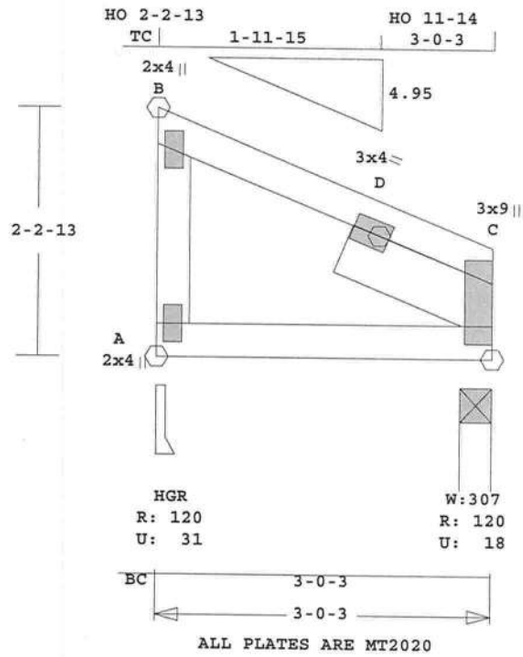

Scale: 0.630" = 1'

Robbins Engineering, Inc./Online Plus™ APPROX. TRUSS WEIGHT: 19.4 LBS

Online Plus -- Version 25.0.012
RUN DATE: 25-NOV-09

	CSI	-Size-	----Lumber----
TC	0.17	2x 4	SP-#2
BC	0.17	2x 4	SP-#2
WB	0.04	2x 4	SP-#2
SL	0.00	2x 6	SP-#2

Brace truss as follows:

	O.C.	From	To
TC	Cont.	0- 0- 0	3- 0- 3
BC	Cont.	0- 0- 0	3- 0- 3

psf-Ld	Dead	Live
TC	10.0	20.0
BC	10.0	0.0
TC+BC	20.0	20.0

Total 40.0 Spacing 24.0"
Lumber Duration Factor 1.25
Plate Duration Factor 1.25
TC Fb=1.15 Fc=1.10 Ft=1.10
BC Fb=1.10 Fc=1.10 Ft=1.10

Total Load Reactions (Lbs)

Jt	Down	Uplift	Horiz-
A	121	32 U	62 R
C	121	18 U	6 R

Jt	Brg Size	Required
A	3.5"	1.5"
C	3.4"	1.5"

Plus 7 Wind Load Case(s)
Plus 1 UBC LL Load Case(s)
Plus 1 DL Load Case(s)

Membr	CSI	P Lbs	Axl-CSI-Bnd
----------Top Chords----------			
B -D	0.17	31 C	0.00 0.17
D -C	0.13	63 C	0.00 0.13
--------Bottom Chords---------			
A -C	0.17	112 T	0.01 0.16
----------Webs----------			
A -B	0.04	189 T	WindLd
----------Sliders----------			
D -C	0.00	44 T	

TL Defl -0.01" in A -C L/999
LL Defl 0.00" in A -C L/999
Shear // Grain in B -D 0.17

Plates for each ply each face.
Plate - MT20 20 Ga, Gross Area
Plate - MT2H 20 Ga, Gross Area

Jt	Type	Plt Size	X	Y	JSI
B	MT20	2.0x 4.0	Ctr	Ctr	0.13
D	MT20	3.0x 4.0	Ctr	Ctr	0.08
C	MT20	3.0x 9.0-1.5	0.3		0.61
A	MT20	2.0x 4.0	Ctr	Ctr	0.16

REVIEWED BY:
Robbins Engineering, Inc.
6904 Parke East Blvd.
Tampa, FL 33610

REFER TO ROBBINS ENG. GENERAL NOTES AND SYMBOLS SHEET FOR ADDITIONAL SPECIFICATIONS.

NOTES:
Trusses Manufactured by:
Mayo Truss Co. Inc.
Analysis Conforms To:
FBC2007
TPI 2002
This truss has been designed for 20.0 psf LL on the B.C. in areas where a rectangle
3- 6- 0 tall by
2- 0- 0 wide
will fit between the B.C. and any other member.
Design checked for 10 psf non-concurrent LL on BC.
Wind Loads - ANSI / ASCE 7-05
Truss is designed as Components and Claddings* for Exterior zone location.
Wind Speed: 120 mph
Mean Roof Height: 15-0
Exposure Category: B
Occupancy Factor : 1.00
Building Type: Enclosed

TC Dead Load: 5.0 psf
BC Dead Load: 5.0 psf
Max comp. force 82 Lbs
Max tens. force 189 Lbs
Connector Plate Fabrication Tolerance = 20%
This truss is designed for a creep factor of 1.5 which is used to calculate total load deflection.

Joaquin Velez, FL Lic. #68182
Robbins Engineering
6904 Parke East Blvd
Tampa, FL, 33610
FL Cert.#5555

November 25,2009

Job	Mark	Quan	Type	Span	P1-H1	Left OH	Right OH	Engineering
JOHNSON-SPEC	C1GIR	1*2P	SP	240413	7	0	0	T3555347

SPEC LOT15 ROSEWOOD ESTATES

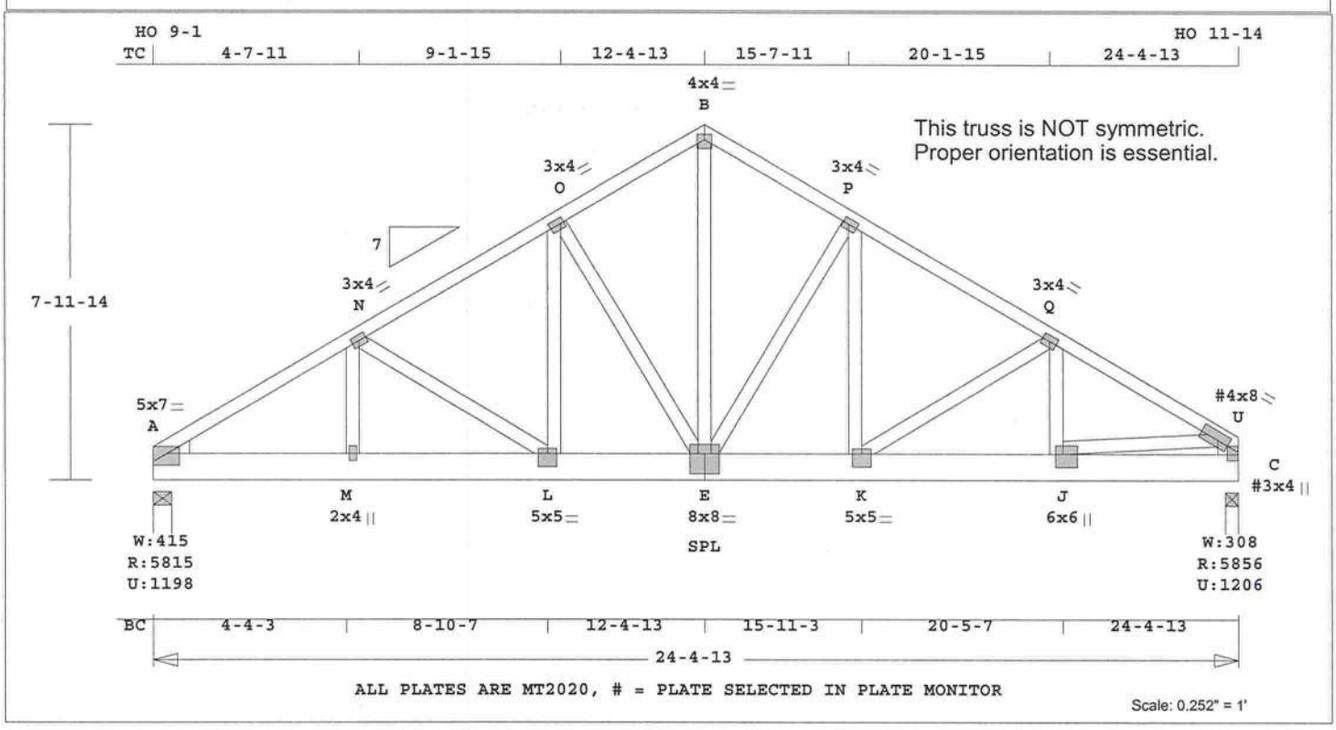

Robbins Engineering, Inc./Online Plus™ APPROX. TRUSS WEIGHT: 238.3 LBS

Online Plus -- Version 25.0.012
RUN DATE: 25-NOV-09
****
* 2-Ply Truss *
****

	CSI	-Size-	----Lumber----
TC	0.33	2x 4	SP-#2
BC	0.37	2x 8	SP-2400f-2.0E
WB	0.60	2x 4	SP-#2
--	0.25	2x 6	SP-#2
	C -U		
PB	---	2x 4	SP-#2

Brace truss as follows:

	O.C.	From	To
TC	Cont.	0- 0- 0	24- 4-13
BC	Cont.	0- 0- 0	24- 4-13

psf-Ld	Dead	Live
TC	10.0	20.0
BC	10.0	0.0
TC+BC	20.0	20.0
Total	40.0	Spacing 24.0"

Lumber Duration Factor 1.25
Plate Duration Factor 1.25
TC Fb=1.00 Fc=1.00 Ft=1.00
BC Fb=1.00 Fc=1.00 Ft=1.00

Total Load Reactions (Lbs)

Jt	Down	Uplift	Horiz-
A	5816	1198 U	178 R
C	5856	1207 U	190 R

Jt	Brg Size	Required
A	4.9"	2.4"
C	3.5"	2.4"

LC# 1 Girder Loading
Dur Fctrs - Lbr 1.25 Plt 1.25

plf -	Dead	Live*	From	To
TC V	20	40	0.0'	24.4'
BC V	219	199	0.0'	24.4'

Plus 9 Wind Load Case(s)
Plus 1 UBC LL Load Case(s)
Plus 1 DL Load Case(s)

Membr	CSI	P Lbs	Axl-CSI-Bnd
----------Top Chords----------			
A -N	0.33	8034 C	0.15 0.18
N -O	0.29	6786 C	0.13 0.16
O -B	0.21	5393 C	0.16 0.05
B -P	0.21	5391 C	0.16 0.05
P -Q	0.26	6613 C	0.19 0.07
Q -U	0.28	7451 C	0.21 0.07
--------Bottom Chords---------			
A -M	0.37	6913 T	0.13 0.24
M -L	0.29	6913 T	0.13 0.16
L -E	0.18	5866 T	0.11 0.07
E -K	0.17	5709 T	0.10 0.07
K -J	0.25	6442 T	0.12 0.13
J -C	0.11	180 T	0.00 0.11
----------Webs----------			
M -N	0.10	1092 T	
N -L	0.14	1244 C	
L -O	0.22	2438 T	
O -E	0.34	2300 C	
E -B	0.47	5190 T	
E -P	0.29	2000 C	
K -P	0.19	2112 T	
K -Q	0.10	871 C	
J -Q	0.05	625 T	
J -U	0.60	6533 T	
C -U	0.25	4960 C	WindLd

TL Defl -0.25" in M -L L/999
LL Defl -0.10" in M -L L/999
Shear // Grain in A -M 0.42

Plates for each ply each face.
Plate - MT20 20 Ga, Gross Area
Plate - MT2H 20 Ga, Gross Area

Jt	Type	Plt Size	X	Y	JSI
A	MT20	5.0x 7.0	1.6	0.4	0.97
N	MT20	3.0x 4.0	Ctr	Ctr	0.56
O	MT20	3.0x 4.0	-0.9	-0.5	0.78
B	MT20	4.0x 4.0	Ctr	-0.5	0.98
P	MT20	3.0x 4.0	0.4	-0.3	0.82
Q	MT20	3.0x 4.0	Ctr	Ctr	0.32
U	MT20	4.0x 8.0	-0.8	0.8	0.99
M	MT20	2.0x 4.0	Ctr	Ctr	0.45
L	MT20	5.0x 5.0	Ctr	-1.1	0.93
E	MT20	8.0x 8.0	Ctr	-1.5	0.78
K	MT20	5.0x 5.0	Ctr	-1.1	0.81
J	MT20	6.0x 6.0	2.7	-0.6	0.94
C	MT20	3.0x 4.0	1.2	0.2	0.63

REVIEWED BY:
Robbins Engineering, Inc.
6904 Parke East Blvd.
Tampa, FL 33610

REFER TO ROBBINS ENG. GENERAL NOTES AND SYMBOLS SHEET FOR ADDITIONAL SPECIFICATIONS.

NOTES:
Trusses Manufactured by:
Mayo Truss Co. Inc.
Analysis Conforms To:
FBC2007
TPI 2002
Girder Common
Loading BC
Span 21-11- 0
2 COMPLETE TRUSSES REQUIRED.
Fasten together in staggered pattern. (1/2" bolts -OR- SDS3 screws -OR- 10d nails as each layer is applied.)

	Rows	Nails	----Spacing (In)---- Screws	Bolts
TC	1	12	24	0
BC	2	12	24	0
WB	1	8	8	

Web Connection Exception --
Space screws or nails for the following webs-
C -U @ 6" o.c.
Design checked for 10 psf non-concurrent LL on BC.
Use properly rated hangers for loads framing into girder truss.
NOTE: USER MODIFIED PLATES
This design may have plates selected through a plate monitor.
Wind Loads - ANSI / ASCE 7-05
Truss is designed as Components and Claddings* for Exterior zone location.
Wind Speed: 120 mph
Mean Roof Height: 15-0
Exposure Category: B
Occupancy Factor : 1.00
Building Type: Enclosed
TC Dead Load: 5.0 psf
BC Dead Load: 5.0 psf
Max comp. force 8034 Lbs
Max tens. force 6913 Lbs
Fabrication Tolerance = 20%
This truss is designed for a creep factor of 1.5 which is used to calculate total load deflection.

Joaquin Velez, FL Lic. #68182
Robbins Engineering
6904 Parke East Blvd
Tampa, FL, 33610
FL Cert.#5555

November 25,2009

Job	Mark	Quan	Type	Span	P1-H1	Left OH	Right OH	Engineering
JOHNSON-SPEC	C2	1	TR	240000	7	0	0	T3555348

SPEC LOT15 ROSEWOOD ESTATES

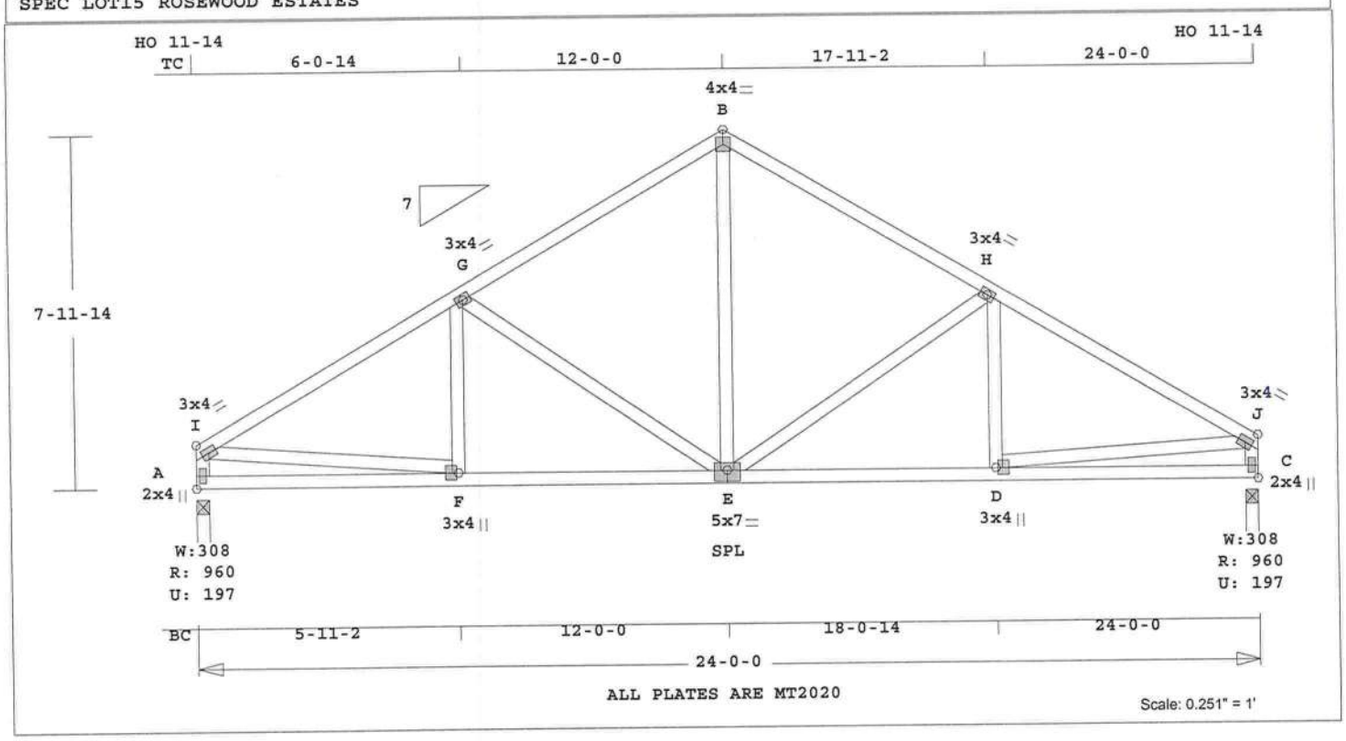

Robbins Engineering, Inc./Online Plus™ APPROX. TRUSS WEIGHT: 176.3 LBS

Online Plus -- Version 25.0.012
RUN DATE: 25-NOV-09

	CSI	-Size-	----Lumber----
TC	0.39	2x 4	SP-#2
BC	0.32	2x 4	SP-#2
WB	0.32	2x 4	SP-#2

Brace truss as follows:

	O.C.	From	To
TC	Cont.	0- 0- 0	24- 0- 0
BC	Cont.	0- 0- 0	24- 0- 0

psf-Ld	Dead	Live
TC	10.0	20.0
BC	10.0	0.0
TC+BC	20.0	20.0
Total	40.0	Spacing 24.0"

Lumber Duration Factor 1.25
Plate Duration Factor 1.25
TC Fb=1.15 Fc=1.10 Ft=1.10
BC Fb=1.10 Fc=1.10 Ft=1.10

Total Load Reactions (Lbs)

Jt	Down	Uplift	Horiz-
A	960	198 U	196 R
C	960	198 U	196 R

Jt	Brg Size	Required
A	3.5"	1.5"
C	3.5"	1.5"

Plus 9 Wind Load Case(s)
Plus 1 UBC LL Load Case(s)
Plus 1 DL Load Case(s)

Membr	CSI	P Lbs	Axl-CSI-Bnd
----------Top Chords----------			
I -G	0.39	1220 C	0.00 0.39
G -B	0.39	885 C	0.00 0.39
B -H	0.39	885 C	0.00 0.39
H -J	0.39	1220 C	0.00 0.39
--------Bottom Chords---------			
A -F	0.21	184 T	0.00 0.21
F -E	0.32	1070 T	0.11 0.21
E -D	0.32	1070 T	0.11 0.21
D -C	0.21	184 T	0.00 0.21
----------Webs----------			
A -I	0.08	909 C	WindLd
I -F	0.19	1080 T	
F -G	0.02	159 T	
G -E	0.32	405 C	
E -B	0.23	550 T	
E -H	0.32	405 C	
D -H	0.02	159 T	
D -J	0.19	1080 T	
C -J	0.08	909 C	WindLd

TL Defl -0.09" in E -D L/999
LL Defl -0.04" in A -F L/999
Shear // Grain in I -G 0.23

Plates for each ply each face.
Plate - MT20 20 Ga, Gross Area
Plate - MT2H 20 Ga, Gross Area

Jt	Type	Plt Size	X	Y	JSI
I	MT20	3.0x 4.0	Ctr	Ctr	0.66
G	MT20	3.0x 4.0	Ctr	Ctr	0.48
B	MT20	4.0x 4.0	Ctr	Ctr	0.42
H	MT20	3.0x 4.0	Ctr	Ctr	0.48
J	MT20	3.0x 4.0	Ctr	Ctr	0.66
A	MT20	2.0x 4.0	Ctr	Ctr	0.33
F	MT20	3.0x 4.0	-2.0	0.1	0.77
E	MT20	5.0x 7.0	Ctr	-0.5	0.44
D	MT20	3.0x 4.0	2.0	0.1	0.77
C	MT20	2.0x 4.0	Ctr	Ctr	0.33

REVIEWED BY:
Robbins Engineering, Inc.
6904 Parke East Blvd.
Tampa, FL 33610

REFER TO ROBBINS ENG. GENERAL NOTES AND SYMBOLS SHEET FOR ADDITIONAL SPECIFICATIONS.

NOTES:
Trusses Manufactured by:
Mayo Truss Co. Inc.
Analysis Conforms To:
FBC2007
TPI 2002
This truss has been designed for 20.0 psf LL on the B.C. in areas where a rectangle
3- 6- 0 tall by
2- 0- 0 wide
will fit between the B.C. and any other member.
Design checked for 10 psf non-concurrent LL on BC.
Wind Loads - ANSI / ASCE 7-05
Truss is designed as Components and Claddings* for Exterior zone location.
Wind Speed: 120 mph
Mean Roof Height: 15-0
Exposure Category: B
Occupancy Factor : 1.00
Building Type: Enclosed
TC Dead Load: 5.0 psf
BC Dead Load: 5.0 psf
Max comp. force 1220 Lbs
Max tens. force 1080 Lbs
Connector Plate Fabrication Tolerance = 20%
This truss is designed for a creep factor of 1.5 which is used to calculate total load deflection.

Joaquin Velez, FL Lic. #68182
Robbins Engineering
6904 Parke East Blvd
Tampa, FL, 33610
FL Cert.#5555

November 25,2009

Job	Mark	Quan	Type	Span	Pl-Hl	Left OH	Right OH	Engineering
JOHNSON-SPEC	J14	2	JCA2	50000	7	4- 0- 0	0	T3555349

SPEC LOT15 ROSEWOOD ESTATES

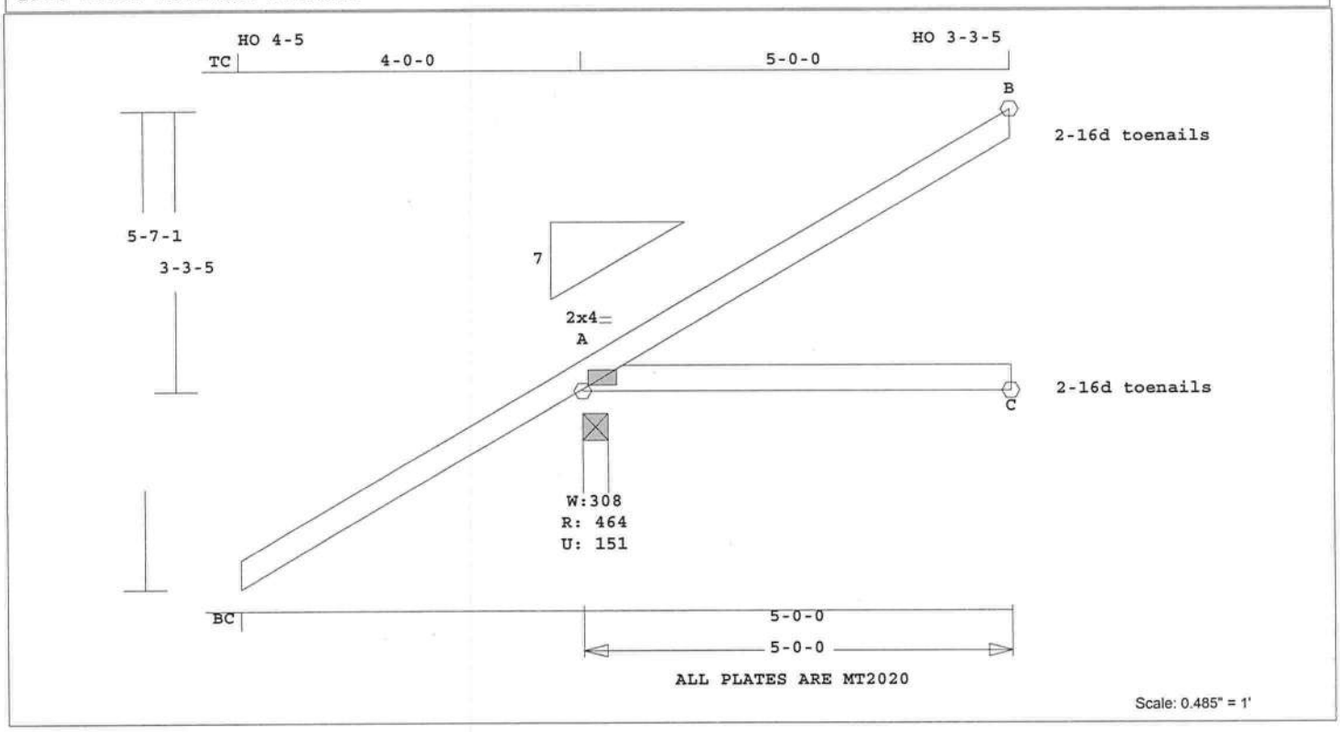

Robbins Engineering, Inc./Online Plus™ APPROX. TRUSS WEIGHT: 29.4 LBS

Online Plus -- Version 25.0.012
RUN DATE: 25-NOV-09

	CSI	-Size-	----Lumber----
TC	0.22	2x 4	SP-#2
BC	0.15	2x 4	SP-#2

Brace truss as follows:

	O.C.	From	To
TC	Cont.	0- 0- 0	5- 0- 0
BC	Cont.	0- 0- 0	5- 0- 0

psf-Ld	Dead	Live
TC	10.0	20.0
BC	10.0	0.0
TC+BC	20.0	20.0

Total 40.0 Spacing 24.0"
Lumber Duration Factor 1.25
Plate Duration Factor 1.25
TC Fb=1.15 Fc=1.10 Ft=1.10
BC Fb=1.10 Fc=1.10 Ft=1.10

Total Load Reactions (Lbs)

Jt	Down	Uplift	Horiz-
A	465	152 U	174 R
C	94		
B	159	81 U	71 R

Jt	Brg Size	Required
A	3.5"	1.5"
C	3.5"	1.5"
B	1.5"	1.5"

Plus 8 Wind Load Case(s)
Plus 1 UBC LL Load Case(s)
Plus 1 DL Load Case(s)

Membr	CSI	P Lbs	Axl-CSI-Bnd
----------Top Chords----------			
A -B	0.22	86 C	0.00 0.22
--------Bottom Chords---------			
A -C	0.15	0 T	0.00 0.15

TL Defl -0.04" in A -C L/999
LL Defl -0.02" in A -C L/999
Shear // Grain in A -B 0.16

Plates for each ply each face.
Plate - MT20 20 Ga, Gross Area
Plate - MT2H 20 Ga, Gross Area

Jt	Type	Plt Size	X	Y	JSI
A	MT20	2.0x 4.0	Ctr	Ctr	0.62

REVIEWED BY:
Robbins Engineering, Inc.
6904 Parke East Blvd.
Tampa, FL 33610

REFER TO ROBBINS ENG. GENERAL NOTES AND SYMBOLS SHEET FOR ADDITIONAL SPECIFICATIONS.

For proper installation of toe-nails, refer to the 2001 National Design Specification (NDS) for Wood Construction

NOTES:
Trusses Manufactured by:
Mayo Truss Co. Inc.
Analysis Conforms To:
FBC2007
TPI 2002
OH Loading
Soffit psf 2.0
Excessive Left OH condition. Max allowable length is 3- 9- 6. Support end or provide level return.
This truss has been designed for 20.0 psf LL on the B.C. in areas where a rectangle
3- 6- 0 tall by
2- 0- 0 wide
will fit between the B.C. and any other member.
Design checked for 10 psf non-concurrent LL on BC.
Wind Loads - ANSI / ASCE 7-05
Truss is designed as Components and Claddings* for Exterior zone location.
Wind Speed: 120 mph
Mean Roof Height: 15-0

Exposure Category: B
Occupancy Factor : 1.00
Building Type: Enclosed
TC Dead Load: 5.0 psf
BC Dead Load: 5.0 psf
Max comp. force 86 Lbs
Max tens. force 68 Lbs
Connector Plate Fabrication Tolerance = 20%
This truss is designed for a creep factor of 1.5 which is used to calculate total load deflection.

Joaquin Velez, FL Lic. #68182
Robbins Engineering
6904 Parke East Blvd
Tampa, FL, 33610
FL Cert.#5555

November 25,2009

Job	Mark	Quan	Type	Span	P1-H1	Left OH	Right OH	Engineering
JOHNSON-SPEC	CJ3	2	MONO.DD	91013	4.95	2- 9-15	0	T3555350

SPEC LOT15 ROSEWOOD ESTATES

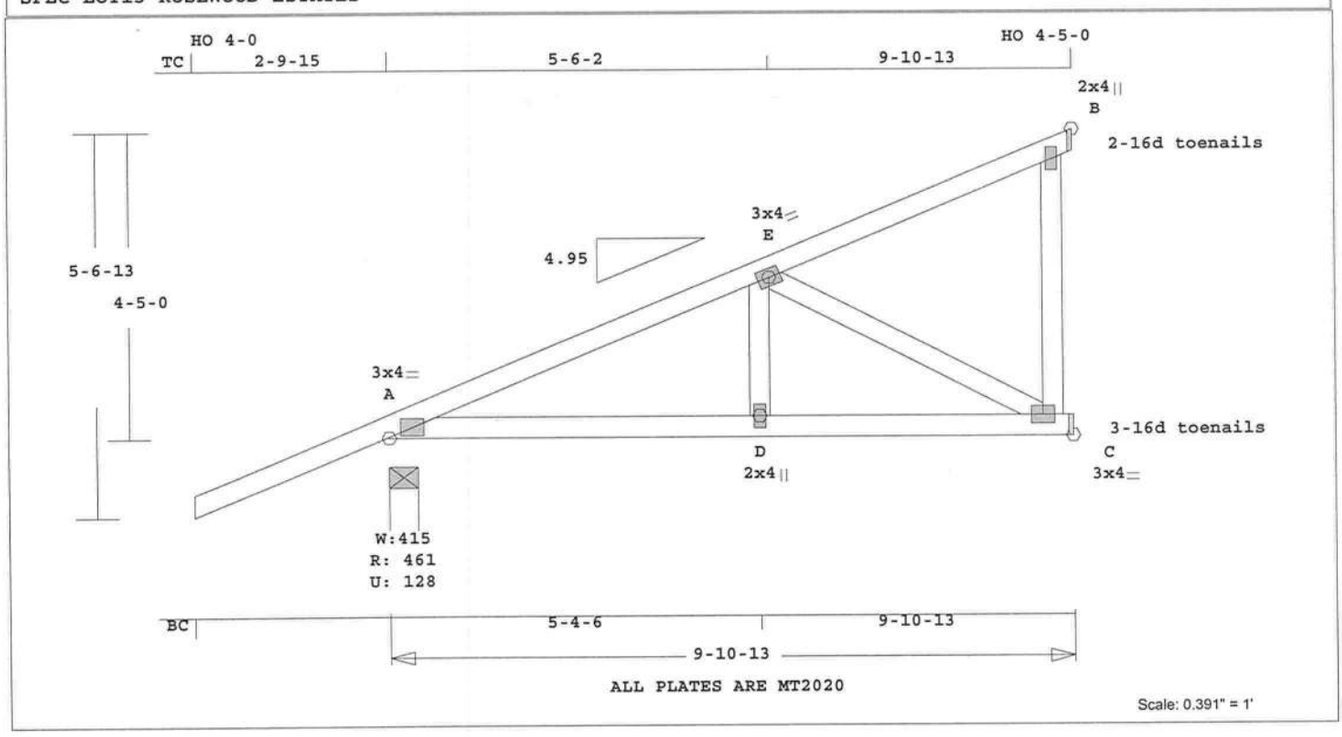

Robbins Engineering, Inc./Online Plus™ APPROX. TRUSS WEIGHT: 64.2 LBS

Online Plus -- Version 25.0.012
RUN DATE: 25-NOV-09

	CSI	-Size-	----Lumber----
TC	0.44	2x 4	SP-#2
BC	0.22	2x 4	SP-#2
WB	0.19	2x 4	SP-#2

Brace truss as follows:

	O.C.	From	To
TC	Cont.	0- 0- 0	9-10-13
BC	Cont.	0- 0- 0	9-10-13

psf-Ld	Dead	Live
TC	10.0	20.0
BC	10.0	0.0
TC+BC	20.0	20.0
Total	40.0	Spacing 24.0"

Lumber Duration Factor 1.25
Plate Duration Factor 1.25
TC Fb=1.00 Fc=1.00 Ft=1.00
BC Fb=1.00 Fc=1.00 Ft=1.00

Total Load Reactions (Lbs)

Jt	Down	Uplift	Horiz-
A	461	128 U	125 R
C	352	40 U	
B	229	102 U	177 R

Jt	Brg Size	Required
A	4.9"	1.5"
C	1.5"	1.5"
B	1.5"	1.5"

LC# 1 Girder Loading
Dur Fctrs - Lbr 1.25 Plt 1.25

plf -	Dead	Live*	From	To
TC V	20	40	0.0'	9.9'
BC V	20	0	0.0'	9.9'
TC V	-20	-40	0.0'	
	22	45		9.9'
BC V	-20	0	0.0'	
	22	0		9.9'

Plus 7 Wind Load Case(s)
Plus 1 UBC LL Load Case(s)
Plus 1 DL Load Case(s)

Membr	CSI	P Lbs	Axl-CSI-Bnd
----------Top Chords----------			
A -E	0.37	521 C	0.03 0.34
E -B	0.44	112 T	0.00 0.44
--------Bottom Chords---------			
A -D	0.20	498 T	0.05 0.15
D -C	0.22	498 T	0.05 0.17
----------Webs----------			
D -E	0.03	236 T	
E -C	0.19	563 C	
C -B	0.09	0 T	WindLd

TL Defl -0.04" in D -C L/999
LL Defl -0.02" in D -C L/999
Shear // Grain in E -B 0.32

Plates for each ply each face.
Plate - MT20 20 Ga, Gross Area
Plate - MT2H 20 Ga, Gross Area

Jt	Type	Plt Size	X	Y	JSI
A	MT20	3.0x 4.0	Ctr	Ctr	0.54
E	MT20	3.0x 4.0	Ctr	Ctr	0.29
B	MT20	2.0x 4.0	Ctr	Ctr	0.13
D	MT20	2.0x 4.0	Ctr	Ctr	0.19
C	MT20	3.0x 4.0	Ctr	Ctr	0.38

REVIEWED BY:
Robbins Engineering, Inc.
6904 Parke East Blvd.
Tampa, FL 33610

REFER TO ROBBINS ENG. GENERAL NOTES AND SYMBOLS SHEET FOR ADDITIONAL SPECIFICATIONS.

For proper installation of toe-nails, refer to the 2001 National Design Specification (NDS) for Wood Construction

NOTES:
Trusses Manufactured by:
Mayo Truss Co. Inc.
Analysis Conforms To:
FBC2007
TPI 2002
Girder King Jack
Loading TC and BC
Setback 7- 0- 0
OH Loading
Soffit psf 2.0
Design checked for 10 psf non-concurrent LL on BC.
Use properly rated hangers for loads framing into girder truss.
Wind Loads - ANSI / ASCE 7-05
Truss is designed as Components and Claddings* for Exterior zone location.
Wind Speed: 120 mph
Mean Roof Height: 15-0
Exposure Category: B
Occupancy Factor : 1.00
Building Type: Enclosed
TC Dead Load: 5.0 psf
BC Dead Load: 5.0 psf
Max comp. force 563 Lbs
Max tens. force 510 Lbs
Connector Plate Fabrication Tolerance = 20%
This truss is designed for a creep factor of 1.5 which is used to calculate total load deflection.

Joaquin Velez, FL Lic. #68182
Robbins Engineering
6904 Parke East Blvd
Tampa, FL, 33610
FL Cert.#5555

November 25,2009

Job	Mark	Quan	Type	Span	P1-H1	Left OH	Right OH	Engineering
JOHNSON-SPEC	CJ4	2	MONO.DD	40013	4.95	2- 9-15	0	T3555351

SPEC LOT15 ROSEWOOD ESTATES

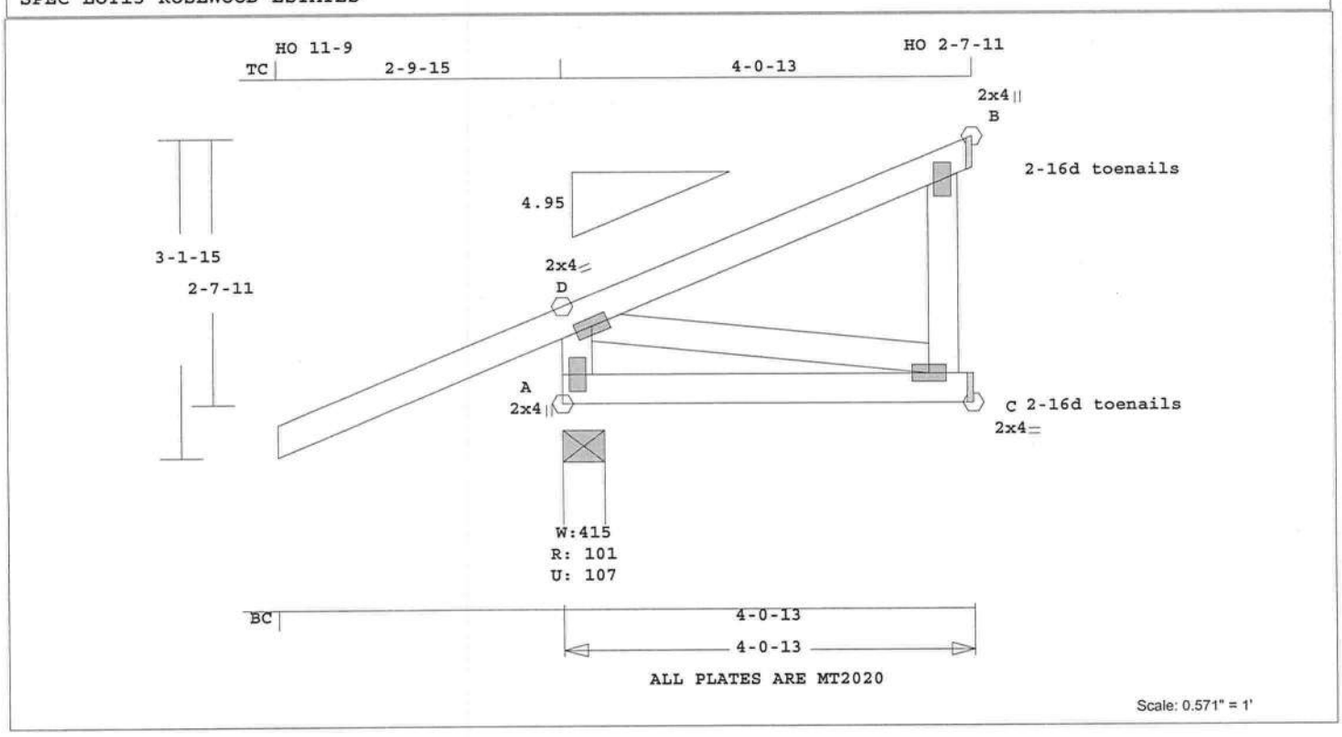

Robbins Engineering, Inc./Online Plus™ APPROX. TRUSS WEIGHT: 33.0 LBS

Online Plus -- Version 25.0.012
RUN DATE: 25-NOV-09

	CSI	-Size-	----Lumber----
TC	0.11	2x 4	SP-#2
BC	0.03	2x 4	SP-#2
WB	0.06	2x 4	SP-#2

Brace truss as follows:

	O.C.	From	To
TC	Cont.	0- 0- 0	4- 0-13
BC	Cont.	0- 0- 0	4- 0-13

psf-Ld	Dead	Live
TC	10.0	20.0
BC	10.0	0.0
TC+BC	20.0	20.0

Total 40.0 Spacing 24.0"
Lumber Duration Factor 1.25
Plate Duration Factor 1.25
TC Fb=1.00 Fc=1.00 Ft=1.00
BC Fb=1.00 Fc=1.00 Ft=1.00

Total Load Reactions (Lbs)

Jt	Down	Uplift	Horiz-
A	102	107 U	62 R
C	38		
B	54	18 U	64 R

Jt	Brg Size	Required
A	4.9"	1.5"
C	1.5"	1.5"
B	1.5"	1.5"

LC# 1 Girder Loading
Dur Fctrs - Lbr 1.25 Plt 1.25

plf -	Dead	Live*	From	To
TC V	20	40	0.0'	4.1'
BC V	20	0	0.0'	4.1'
TC V	-20	-40	0.0'	
	-7	-13		4.1'
BC V	-20	0	0.0'	
	-7	0		4.1'

Plus 7 Wind Load Case(s)
Plus 1 UBC LL Load Case(s)
Plus 1 DL Load Case(s)

Membr	CSI	P Lbs	Axl-CSI-Bnd
----------Top Chords----------			
D -B	0.11	45 T	0.00 0.11
--------Bottom Chords---------			
A -C	0.03	82 T	0.00 0.03
----------Webs----------			
A -D	0.06	479 T	WindLd
D -C	0.00	28 C	
C -B	0.02	0 T	WindLd

TL Defl -0.01" in A -C L/999
LL Defl 0.00" in A -C L/999
Shear // Grain in D -B 0.10

Plates for each ply each face.
Plate - MT20 20 Ga, Gross Area
Plate - MT2H 20 Ga, Gross Area

Jt	Type	Plt Size	X	Y	JSI
D	MT20	2.0x 4.0	Ctr	Ctr	0.51
B	MT20	2.0x 4.0	Ctr	Ctr	0.13
A	MT20	2.0x 4.0	Ctr	Ctr	0.39
C	MT20	2.0x 4.0	Ctr	Ctr	0.28

REVIEWED BY:
Robbins Engineering, Inc.
6904 Parke East Blvd.
Tampa, FL 33610

REFER TO ROBBINS ENG. GENERAL NOTES AND SYMBOLS SHEET FOR ADDITIONAL SPECIFICATIONS.

For proper installation of toe-nails, refer to the 2001 National Design Specification (NDS) for Wood Construction

NOTES:
Trusses Manufactured by:
Mayo Truss Co. Inc.
Analysis Conforms To:
FBC2007
TPI 2002
Girder King Jack
Loading TC and BC
Setback 2-10- 8
OH Loading
Soffit psf 2.0
Design checked for 10 psf non-concurrent LL on BC.
Use properly rated hangers for loads framing into girder truss.
Wind Loads - ANSI / ASCE 7-05
Truss is designed as Components and Claddings* for Exterior zone location.
Wind Speed: 120 mph
Mean Roof Height: 15-0
Exposure Category: B
Occupancy Factor : 1.00
Building Type: Enclosed
TC Dead Load: 5.0 psf
BC Dead Load: 5.0 psf
Max comp. force 160 Lbs
Max tens. force 479 Lbs
Connector Plate Fabrication Tolerance = 20%
This truss is designed for a creep factor of 1.5 which is used to calculate total load deflection.

Joaquin Velez, FL Lic. #68182
Robbins Engineering
6904 Parke East Blvd
Tampa, FL, 33610
FL Cert.#5555

November 25,2009

Job	Mark	Quan	Type	Span	Pl-Hl	Left OH	Right OH	Engineering
JOHNSON-SPEC	D1GIR	1*2P	TR	150800	7	0	0	T3555352

SPEC LOT15 ROSEWOOD ESTATES

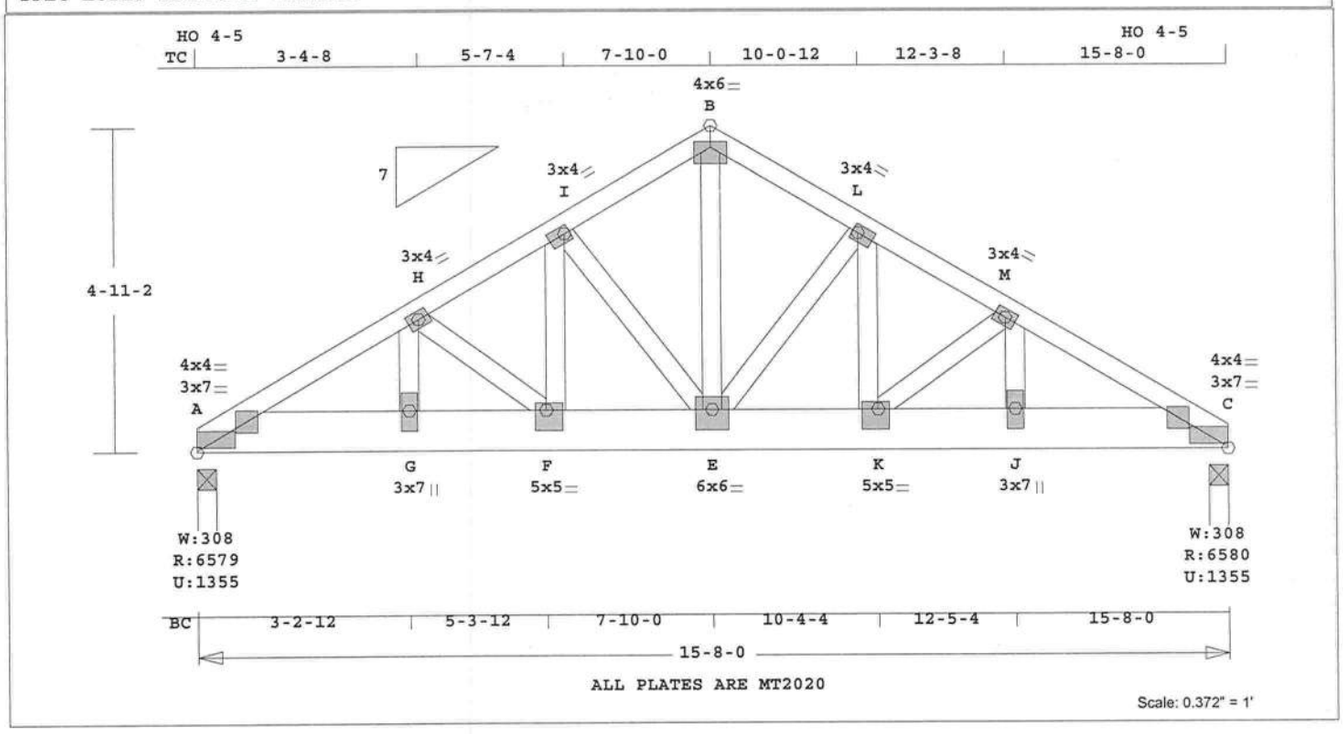

Robbins Engineering, Inc./Online Plus™ APPROX. TRUSS WEIGHT: 138.9 LBS

Online Plus -- Version 25.0.012
RUN DATE: 25-NOV-09
****
* 2-Ply Truss *
****

	CSI	-Size-	----Lumber----
TC	0.39	2x 4	SP-#2
BC	0.35	2x 8	SP-2400f-2.0E
WB	0.58	2x 4	SP-#2

Brace truss as follows:

	O.C.	From	To
TC	Cont.	0- 0- 0	15- 8- 0
BC	Cont.	0- 0- 0	15- 8- 0

psf-Ld	Dead	Live
TC	10.0	20.0
BC	10.0	0.0
TC+BC	20.0	20.0

Total 40.0 Spacing 24.0"
Lumber Duration Factor 1.25
Plate Duration Factor 1.25
TC Fb=1.00 Fc=1.00 Ft=1.00
BC Fb=1.00 Fc=1.00 Ft=1.00

Total Load Reactions (Lbs)

Jt	Down	Uplift	Horiz-
A	6580	1356 U	107 R
C	6580	1356 U	107 R

Jt	Brg Size	Required
A	3.5"	2.7"
C	3.5"	2.7"

LC# 1 Girder Loading
Dur Fctrs - Lbr 1.25 Plt 1.25

plf -	Dead	Live*	From	To
TC V	20	40	0.0'	15.7'
BC V	400	380	0.0'	15.7'

Plus 9 Wind Load Case(s)
Plus 1 UBC LL Load Case(s)
Plus 1 DL Load Case(s)

Membr	CSI	P Lbs	Axl-CSI-Bnd	
----------Top Chords----------				
A -H	0.39	9911 C	0.22	0.17
H -I	0.27	8339 C	0.24	0.03
I -B	0.23	6522 C	0.19	0.04
B -L	0.23	6522 C	0.19	0.04
L -M	0.27	8339 C	0.24	0.03
M -C	0.39	9911 C	0.22	0.17
--------Bottom Chords---------				
A -G	0.35	8585 T	0.16	0.19
G -F	0.30	8585 T	0.16	0.14
F -E	0.21	7193 T	0.13	0.08
E -K	0.21	7193 T	0.13	0.08
K -J	0.30	8585 T	0.16	0.14
J -C	0.35	8585 T	0.16	0.19
----------Webs----------				
G -H	0.15	1704 T		
H -F	0.14	1777 C		
F -I	0.26	2831 T		
I -E	0.22	2484 C		
E -B	0.58	6286 T		
E -L	0.22	2484 C		
K -L	0.26	2831 T		
K -M	0.14	1777 C		
J -M	0.15	1704 T		

TL Defl -0.19" in E -K L/939
LL Defl -0.08" in E -K L/999
Shear // Grain in F -E 0.34

Plates for each ply each face.
Plate - MT20 20 Ga, Gross Area
Plate - MT2H 20 Ga, Gross Area

Jt	Type	Plt Size	X	Y	JSI
A	MT20	3.0x 7.0	0.5	0.3	0.80
A	MT20	4.0x 4.0	0.1	Ctr	0.80
H	MT20	3.0x 4.0	Ctr	Ctr	0.87
I	MT20	3.0x 4.0	-0.9	-0.5	0.88
B	MT20	4.0x 6.0	Ctr	-1.0	0.95
L	MT20	3.0x 4.0	0.9	-0.5	0.88
M	MT20	3.0x 4.0	Ctr	Ctr	0.87
C	MT20	3.0x 7.0	-0.5	0.3	0.80
C	MT20	4.0x 4.0	-0.1	Ctr	0.80
G	MT20	3.0x 7.0	Ctr	-0.1	0.34
F	MT20	5.0x 5.0	0.5	-1.1	0.90
E	MT20	6.0x 6.0	Ctr	-0.6	1.00
K	MT20	5.0x 5.0	-0.5	-1.1	0.90
J	MT20	3.0x 7.0	Ctr	-0.1	0.34

REVIEWED BY:
Robbins Engineering, Inc.
6904 Parke East Blvd.
Tampa, FL 33610

REFER TO ROBBINS ENG. GENERAL NOTES AND SYMBOLS SHEET FOR ADDITIONAL SPECIFICATIONS.

NOTES:
Trusses Manufactured by:
Mayo Truss Co. Inc.
Analysis Conforms To:
FBC2007
TPI 2002
Girder Common
Loading BC
Span 40- 0- 0
2 COMPLETE TRUSSES REQUIRED.
Fasten together in staggered pattern. (1/2" bolts -OR- SDS3 screws -OR- 10d nails as each layer is applied.)

	Rows	Nails	Screws	Bolts
TC	1	12	24	0
BC	2	9.5	18	0
WB	1	8	8	

Design checked for 10 psf non-concurrent LL on BC.
Use properly rated hangers for loads framing into girder truss.
Wind Loads - ANSI / ASCE 7-05
Truss is designed as Components and Claddings* for Exterior zone location.
Wind Speed: 120 mph
Mean Roof Height: 15-0
Exposure Category: B
Occupancy Factor : 1.00
Building Type: Enclosed
TC Dead Load: 5.0 psf
BC Dead Load: 5.0 psf
Max comp. force 9911 Lbs
Max tens. force 8585 Lbs
Connector Plate Fabrication Tolerance = 20%
This truss is designed for a creep factor of 1.5 which is used to calculate total load deflection.

Joaquin Velez, FL Lic. #68182
Robbins Engineering
6904 Parke East Blvd
Tampa, FL, 33610
FL Cert.#5555

November 25,2009

Job	Mark	Quan	Type	Span	P1-H1	Left OH	Right OH	Engineering
JOHNSON-SPEC	J1	2	JCA2	70000	7	4- 0- 0	0	T3555353

SPEC LOT15 ROSEWOOD ESTATES

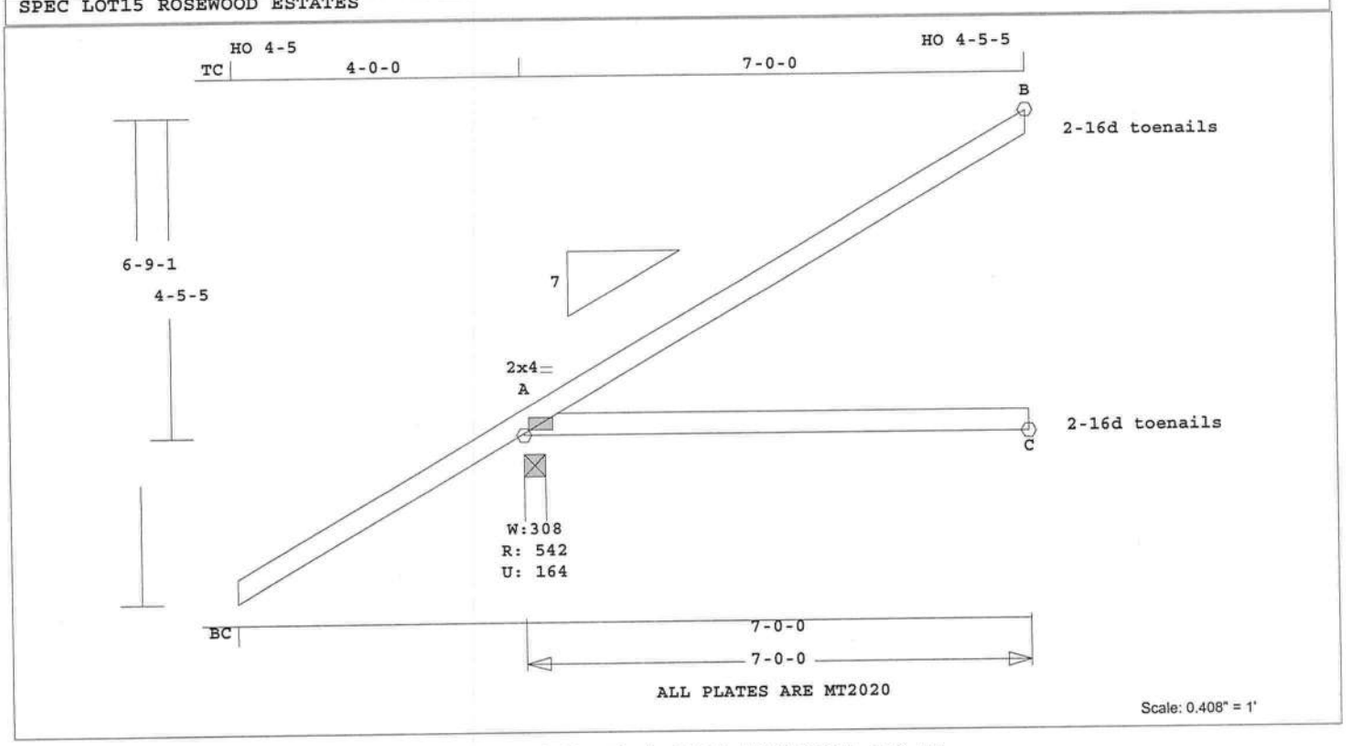

Robbins Engineering, Inc./Online Plus™ APPROX. TRUSS WEIGHT: 37.6 LBS

Online Plus -- Version 25.0.012
RUN DATE: 25-NOV-09

	CSI	-Size-	----Lumber----
TC	0.48	2x 4	SP-#2
BC	0.33	2x 4	SP-#2

Brace truss as follows:

	O.C.	From	To
TC	Cont.	0- 0- 0	7- 0- 0
BC	Cont.	0- 0- 0	7- 0- 0

psf-Ld	Dead	Live
TC	10.0	20.0
BC	10.0	0.0
TC+BC	20.0	20.0

Total 40.0 Spacing 24.0"
Lumber Duration Factor 1.25
Plate Duration Factor 1.25
TC Fb=1.15 Fc=1.10 Ft=1.10
BC Fb=1.10 Fc=1.10 Ft=1.10

Total Load Reactions (Lbs)

Jt	Down	Uplift	Horiz-
A	542	164 U	237 R
C	132		
B	221	114 U	100 R

Jt	Brg Size	Required
A	3.5"	1.5"
C	3.5"	1.5"
B	1.5"	1.5"

Plus 8 Wind Load Case(s)
Plus 1 UBC LL Load Case(s)
Plus 1 DL Load Case(s)

Membr	CSI	P Lbs	Axl-CSI-Bnd
----------Top Chords----------			
A -B	0.48	118 C	0.00 0.48
--------Bottom Chords---------			
A -C	0.33	0 T	0.00 0.33

TL Defl -0.19" in A -C L/414
LL Defl -0.08" in A -C L/999
Shear // Grain in A -B 0.23

Plates for each ply each face.
Plate - MT20 20 Ga, Gross Area
Plate - MT2H 20 Ga, Gross Area

Jt	Type	Plt Size	X	Y	JSI
A	MT20	2.0x 4.0	Ctr	Ctr	0.62

REVIEWED BY:
Robbins Engineering, Inc.
6904 Parke East Blvd.
Tampa, FL 33610

REFER TO ROBBINS ENG. GENERAL NOTES AND SYMBOLS SHEET FOR ADDITIONAL SPECIFICATIONS.

For proper installation of toe-nails, refer to the 2001 National Design Specification (NDS) for Wood Construction

NOTES:
Trusses Manufactured by:
Mayo Truss Co. Inc.
Analysis Conforms To:
FBC2007
TPI 2002
OH Loading
Soffit psf 2.0
Excessive Left OH condition.
Max allowable length is
3- 9-12. Support end or
provide level return.
This truss has been designed
for 20.0 psf LL on the B.C.
in areas where a rectangle
3- 6- 0 tall by
2- 0- 0 wide
will fit between the B.C.
and any other member.
Design checked for 10 psf non-concurrent LL on BC.
Wind Loads - ANSI / ASCE 7-05
Truss is designed as
Components and Claddings*
for Exterior zone location.
Wind Speed: 120 mph
Mean Roof Height: 15-0

Exposure Category: B
Occupancy Factor : 1.00
Building Type: Enclosed
TC Dead Load: 5.0 psf
BC Dead Load: 5.0 psf
Max comp. force 118 Lbs
Max tens. force 94 Lbs
Connector Plate Fabrication Tolerance = 20%
This truss is designed for a creep factor of 1.5 which is used to calculate total load deflection.

Joaquin Velez, FL Lic. #68182
Robbins Engineering
6904 Parke East Blvd
Tampa, FL, 33610
FL Cert.#5555

November 25,2009

Job	Mark	Quan	Type	Span	P1-H1	Left OH	Right OH	Engineering
JOHNSON-SPEC	D2GIR	1	HIPP	150800	7	0	2- 0- 0	T3555354

SPEC LOT15 ROSEWOOD ESTATES

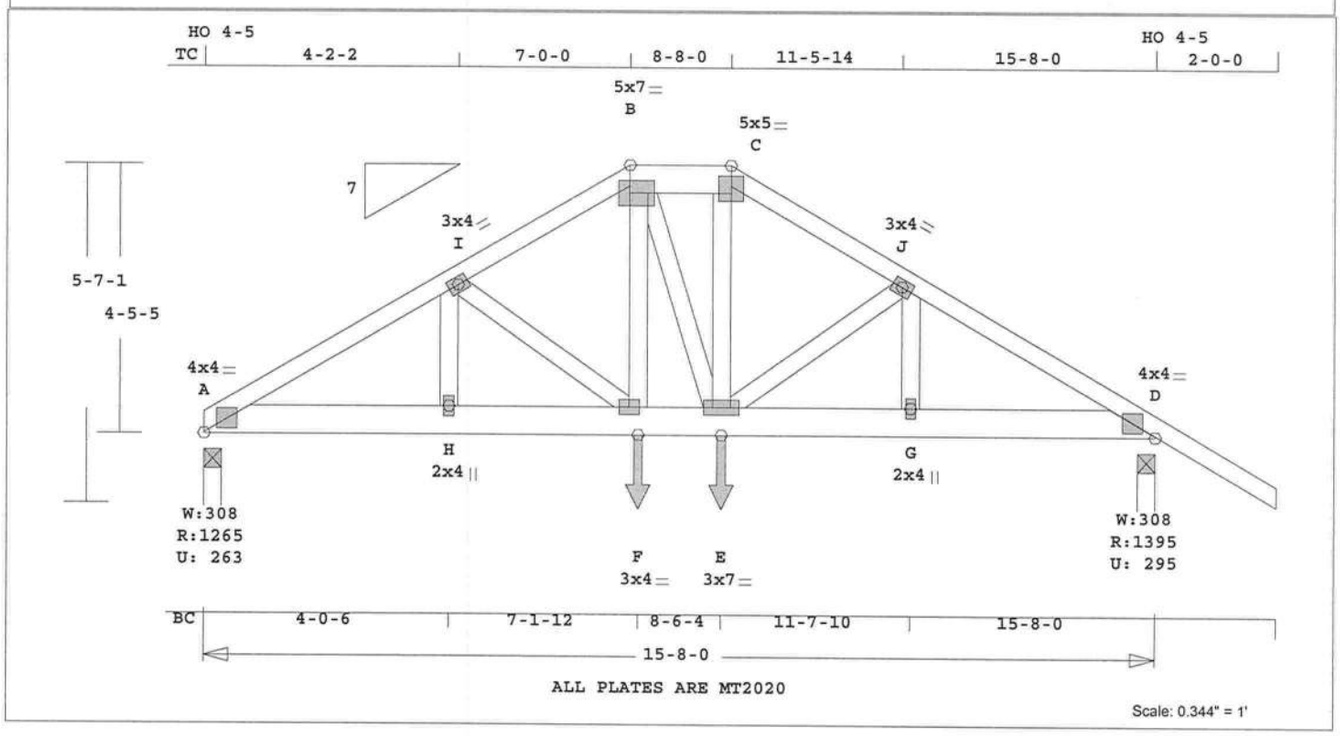

Robbins Engineering, Inc./Online Plus™ APPROX. TRUSS WEIGHT: 125.7 LBS

Online Plus -- Version 25.0.012
RUN DATE: 25-NOV-09

	CSI	-Size-	----Lumber----
TC	0.29	2x 4	SP-#2
--	0.15	2x 6	SP-#2
	B -C		
BC	0.34	2x 6	SP-#2
WB	0.13	2x 4	SP-#2

Brace truss as follows:

	O.C.	From	To
TC	Cont.	0- 0- 0	15- 8- 0
BC	Cont.	0- 0- 0	15- 8- 0

psf-Ld	Dead	Live
TC	10.0	20.0
BC	10.0	0.0
TC+BC	20.0	20.0
Total	40.0	Spacing 24.0"

Lumber Duration Factor 1.25
Plate Duration Factor 1.25
TC Fb=1.00 Fc=1.00 Ft=1.00
BC Fb=1.00 Fc=1.00 Ft=1.00

Total Load Reactions (Lbs)

Jt	Down	Uplift	Horiz-
A	1265	263 U	96 R
D	1395	296 U	96 R

Jt	Brg Size	Required
A	3.5"	1.5"
D	3.5"	1.6"

LC# 1 Girder Loading
Dur Fctrs - Lbr 1.25 Plt 1.25

plf -	Dead	Live*	From	To
TC V	20	40	0.0'	15.7'
BC V	20	0	0.0'	15.7'
TC V	25	50	7.0'	8.7'
BC V	25	0	7.1'	8.5'
BC V	280	280	7.1'	CL-LB
BC V	280	280	8.5'	CL-LB

Plus 9 Wind Load Case(s)
Plus 1 UBC LL Load Case(s)
Plus 1 DL Load Case(s)

Membr	CSI	P Lbs	Axl-CSI-Bnd		
----------Top Chords----------					
A -I	0.20	2121 C	0.13	0.07	
I -B	0.29	1906 C	0.02	0.27	
B -C	0.15	1693 C	0.01	0.14	
C -J	0.27	1939 C	0.02	0.25	
J -D	0.20	2108 C	0.13	0.07	
--------Bottom Chords---------					
A -H	0.31	1826 T	0.24	0.07	
H -F	0.34	1826 T	0.24	0.10	
F -E	0.31	1651 T	0.22	0.09	
E -G	0.30	1815 T	0.24	0.06	
G -D	0.31	1815 T	0.24	0.07	
----------Webs----------					
H -I	0.02	151 T			
I -F	0.04	218 C			
F -B	0.11	636 T			
B -E	0.02	127 T			
E -C	0.13	703 T			
E -J	0.03	183 C			
G -J	0.01	108 T			

TL Defl -0.11" in H -F L/999
LL Defl -0.05" in H -F L/999
Shear // Grain in I -B 0.14

Plates for each ply each face.
Plate - MT20 20 Ga, Gross Area
Plate - MT2H 20 Ga, Gross Area

Jt	Type	Plt Size	X	Y	JSI
A	MT20	4.0x 4.0	Ctr	Ctr	0.90
I	MT20	3.0x 4.0	Ctr	Ctr	0.21
B	MT20	5.0x 7.0	-0.5	Ctr	0.73
C	MT20	5.0x 5.0	Ctr	-0.5	0.53
J	MT20	3.0x 4.0	Ctr	Ctr	0.21
D	MT20	4.0x 4.0	Ctr	Ctr	0.90
H	MT20	2.0x 4.0	Ctr	Ctr	0.12
F	MT20	3.0x 4.0	Ctr	Ctr	0.56
E	MT20	3.0x 7.0	Ctr	Ctr	0.35
G	MT20	2.0x 4.0	Ctr	Ctr	0.12

REVIEWED BY:
Robbins Engineering, Inc.
6904 Parke East Blvd.
Tampa, FL 33610

REFER TO ROBBINS ENG. GENERAL NOTES AND SYMBOLS SHEET FOR ADDITIONAL SPECIFICATIONS.

NOTES:
Trusses Manufactured by:
Mayo Truss Co. Inc.
Analysis Conforms To:
FBC2007
TPI 2002
Girder Step Down Hip
Framing King Jacks
Jack Open Faced
Setback 7- 0- 0
OH Loading
Soffit psf 2.0
Design checked for 10 psf non-concurrent LL on BC.
Wind Loads - ANSI / ASCE 7-05
Truss is designed as Components and Claddings* for Exterior zone location.
Wind Speed: 120 mph
Mean Roof Height: 15-0
Exposure Category: B
Occupancy Factor : 1.00
Building Type: Enclosed
TC Dead Load: 5.0 psf
BC Dead Load: 5.0 psf
Max comp. force 2121 Lbs
Max tens. force 1826 Lbs
Connector Plate Fabrication Tolerance = 20%
This truss is designed for a creep factor of 1.5 which is used to calculate total load deflection.

Joaquin Velez, FL Lic. #68182
Robbins Engineering
6904 Parke East Blvd
Tampa, FL, 33610
FL Cert.#5555

November 25,2009

Job	Mark	Quan	Type	Span	Pl-Hl	Left OH	Right OH	Engineering
JOHNSON-SPEC	J7	5	JCA2	21008	7	2- 0- 0	0	T3555355

SPEC LOT15 ROSEWOOD ESTATES

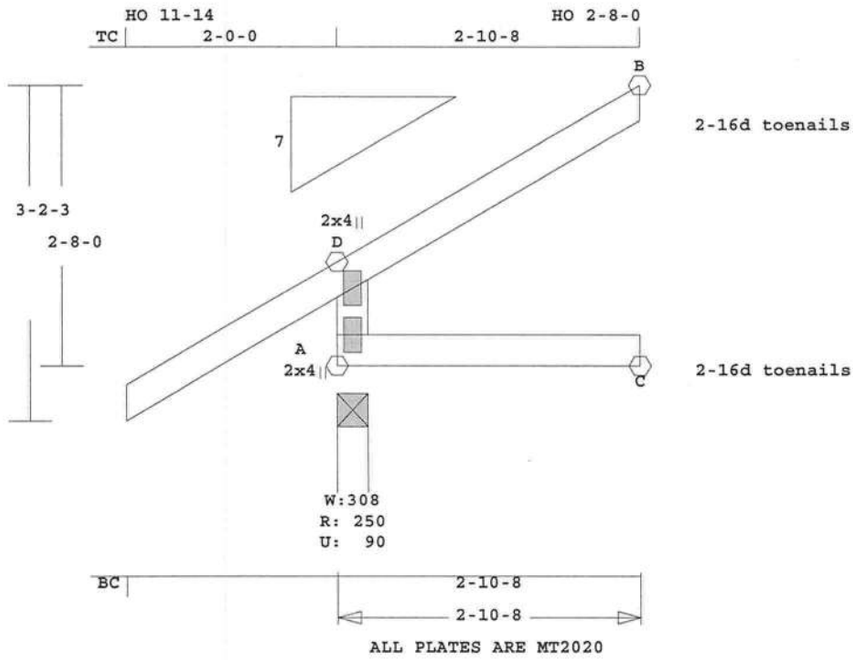

Robbins Engineering, Inc./Online Plus™ APPROX. TRUSS WEIGHT: 17.4 LBS

Online Plus -- Version 25.0.012
RUN DATE: 25-NOV-09

	CSI	-Size-	----Lumber----
TC	0.08	2x 4	SP-#2
BC	0.09	2x 4	SP-#2
WB	0.12	2x 4	SP-#2

Brace truss as follows:

	O.C.	From	To
TC	Cont.	0- 0- 0	2-10- 8
BC	Cont.	0- 0- 0	2-10- 8

psf-Ld	Dead	Live
TC	10.0	20.0
BC	10.0	0.0
TC+BC	20.0	20.0

Total 40.0 Spacing 24.0"
Lumber Duration Factor 1.25
Plate Duration Factor 1.25
TC Fb=1.15 Fc=1.10 Ft=1.10
BC Fb=1.10 Fc=1.10 Ft=1.10

Total Load Reactions (Lbs)

Jt	Down	Uplift	Horiz-
A	251	90 U	143 R
C	55	1 U	
B	105	58 U	55 R

Jt	Brg Size	Required
A	3.5"	1.5"
C	3.5"	1.5"
B	1.5"	1.5"

Plus 8 Wind Load Case(s)
Plus 1 UBC LL Load Case(s)
Plus 1 DL Load Case(s)

Membr	CSI	P Lbs	Axl-CSI-Bnd
----------Top Chords----------			
D -B	0.08	59 C	0.00 0.08
--------Bottom Chords---------			
A -C	0.09	0 T	0.00 0.09
----------Webs----------			
A -D	0.12	224 C	0.02 0.10

TL Defl 0.00" in A -C L/999
LL Defl 0.00" in A -C L/999
Shear // Grain in D -B 0.09

Plates for each ply each face.
Plate - MT20 20 Ga, Gross Area
Plate - MT2H 20 Ga, Gross Area

Jt	Type	Plt Size	X	Y	JSI
D	MT20	2.0x 4.0	Ctr	Ctr	0.12
A	MT20	2.0x 4.0	Ctr	Ctr	0.16

REVIEWED BY:
Robbins Engineering, Inc.
6904 Parke East Blvd.
Tampa, FL 33610

REFER TO ROBBINS ENG. GENERAL NOTES AND SYMBOLS SHEET FOR ADDITIONAL SPECIFICATIONS.

For proper installation of toe-nails, refer to the 2001 National Design Specification (NDS) for Wood Construction

NOTES:
Trusses Manufactured by:
Mayo Truss Co. Inc.
Analysis Conforms To:
FBC2007
TPI 2002
OH Loading
Soffit psf 2.0
This truss has been designed for 20.0 psf LL on the B.C. in areas where a rectangle
3- 6- 0 tall by
2- 0- 0 wide
will fit between the B.C. and any other member.
Design checked for 10 psf non-concurrent LL on BC.
Wind Loads - ANSI / ASCE 7-05
Truss is designed as Components and Claddings* for Exterior zone location.
Wind Speed: 120 mph
Mean Roof Height: 15-0
Exposure Category: B
Occupancy Factor : 1.00
Building Type: Enclosed
TC Dead Load: 5.0 psf
BC Dead Load: 5.0 psf
Max comp. force 224 Lbs
Max tens. force 189 Lbs
Connector Plate Fabrication Tolerance = 20%
This truss is designed for a creep factor of 1.5 which is used to calculate total load deflection.

Joaquin Velez, FL Lic. #68182
Robbins Engineering
6904 Parke East Blvd
Tampa, FL, 33610
FL Cert.#5555

November 25,2009

Job	Mark	Quan	Type	Span	P1-H1	Left OH	Right OH	Engineering
JOHNSON-SPEC	E3GIR	1	HIPP	121000	7	2- 0- 0	2- 0- 0	T3555356

SPEC LOT15 ROSEWOOD ESTATES

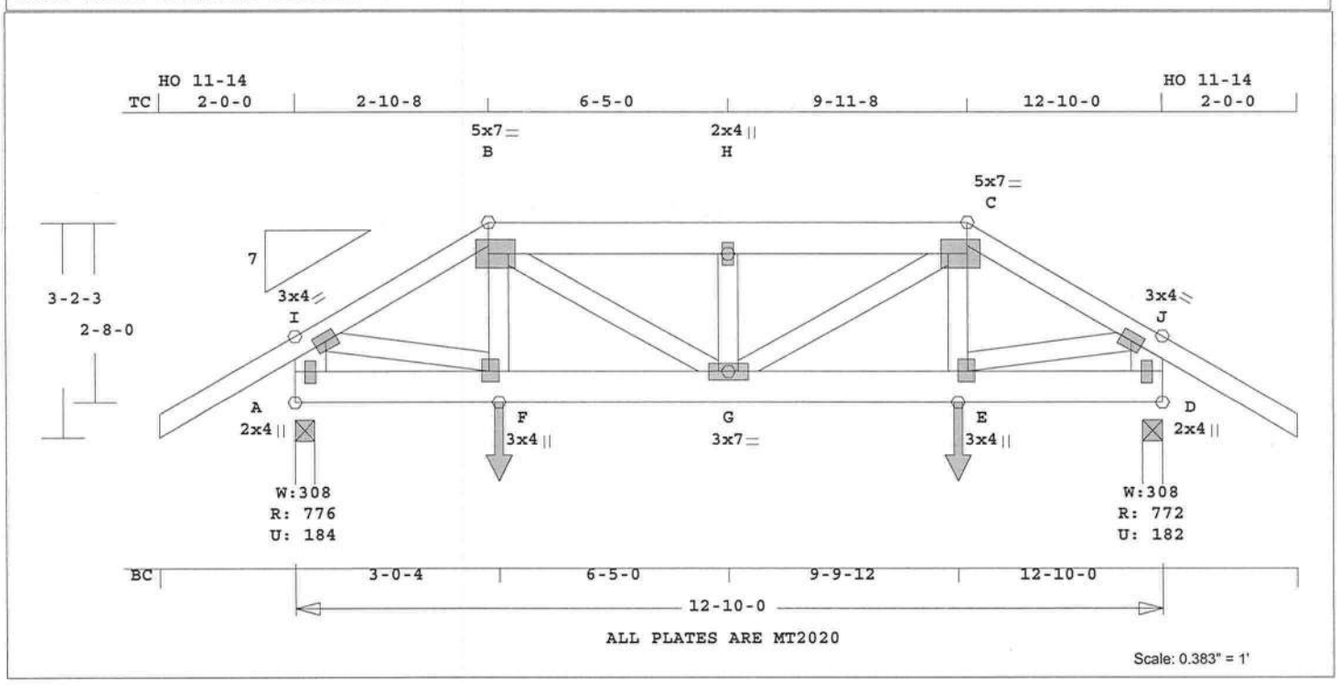

Robbins Engineering, Inc./Online Plus™ APPROX. TRUSS WEIGHT: 113.7 LBS

Online Plus -- Version 25.0.012
RUN DATE: 25-NOV-09

	CSI	-Size-	----Lumber----
TC	0.12	2x 4	SP-#2
--	0.11	2x 6	SP-#2
	B -C		
BC	0.12	2x 6	SP-#2
WB	0.11	2x 4	SP-#2
--	0.05	2x 6	SP-#2
	A -I	D -J	

Brace truss as follows:

	O.C.	From	To
TC	Cont.	0- 0- 0	12-10- 0
BC	Cont.	0- 0- 0	12-10- 0

psf-Ld	Dead	Live
TC	10.0	20.0
BC	10.0	0.0
TC+BC	20.0	20.0
Total	40.0	Spacing 24.0"

Lumber Duration Factor 1.25
Plate Duration Factor 1.25
TC Fb=1.00 Fc=1.00 Ft=1.00
BC Fb=1.00 Fc=1.00 Ft=1.00

Total Load Reactions (Lbs)

Jt	Down	Uplift	Horiz-
A	777	184 U	64 R
D	772	182 U	64 R

Jt	Brg Size	Required
A	3.5"	1.5"
D	3.5"	1.5"

LC# 1 Girder Loading
Dur Fctrs - Lbr 1.25 Plt 1.25

plf -	Dead	Live*	From	To
TC V	20	40	0.0'	12.8'
BC V	20	0	0.0'	12.8'
TC V	4	9	2.9'	10.0'
BC V	4	0	3.0'	9.8'
BC V	36	36	3.0'	CL-LB
BC V	36	36	9.8'	CL-LB

Plus 9 Wind Load Case(s)
Plus 1 UBC LL Load Case(s)
Plus 1 DL Load Case(s)

Membr	CSI	P Lbs	Axl-CSI-Bnd
----------Top Chords----------			
I -B	0.10	715 C	0.05 0.05
B -H	0.11	925 C	0.06 0.05
H -C	0.11	925 C	0.06 0.05
C -J	0.12	720 C	0.06 0.06
--------Bottom Chords---------			
A -F	0.02	53 T	0.00 0.02
F -G	0.12	619 T	0.08 0.04
G -E	0.11	628 T	0.08 0.03
E -D	0.02	53 T	0.00 0.02
----------Webs----------			
A -I	0.05	738 C	WindLd
I -F	0.11	637 T	
F -B	0.01	83 T	
B -G	0.06	357 T	
G -H	0.03	264 C	
G -C	0.06	345 T	
E -C	0.01	85 T	
E -J	0.11	647 T	
D -J	0.05	734 C	WindLd

TL Defl -0.03" in F -G L/999
LL Defl -0.01" in G -E L/999
Shear // Grain in I -I 0.15

Plates for each ply each face.
Plate - MT20 20 Ga, Gross Area
Plate - MT2H 20 Ga, Gross Area

Jt	Type	Plt Size	X	Y	JSI
I	MT20	3.0x 4.0	Ctr	Ctr	0.50
B	MT20	5.0x 7.0	-0.5	Ctr	0.73
H	MT20	2.0x 4.0	Ctr	Ctr	0.21
C	MT20	5.0x 7.0	0.5	Ctr	0.73
J	MT20	3.0x 4.0	Ctr	Ctr	0.50
A	MT20	2.0x 4.0	Ctr	Ctr	0.40
F	MT20	3.0x 4.0	-1.5	0.2	0.63
G	MT20	3.0x 7.0	Ctr	Ctr	0.30
E	MT20	3.0x 4.0	1.5	0.2	0.64
D	MT20	2.0x 4.0	Ctr	Ctr	0.40

REVIEWED BY:
Robbins Engineering, Inc.
6904 Parke East Blvd.
Tampa, FL 33610

REFER TO ROBBINS ENG. GENERAL NOTES AND SYMBOLS SHEET FOR ADDITIONAL SPECIFICATIONS.

NOTES:
Trusses Manufactured by:
Mayo Truss Co. Inc.
Analysis Conforms To:
FBC2007
TPI 2002

Girder Step Down Hip
Framing King Jacks
Jack Open Faced
Setback 2-10- 8
OH Loading
Soffit psf 2.0
Design checked for 10 psf non-concurrent LL on BC.
Wind Loads - ANSI / ASCE 7-05
Truss is designed as
Components and Claddings* for Exterior zone location.
Wind Speed: 120 mph
Mean Roof Height: 15-0
Exposure Category: B
Occupancy Factor : 1.00
Building Type: Enclosed
TC Dead Load: 5.0 psf
BC Dead Load: 5.0 psf
Max comp. force 925 Lbs
Max tens. force 647 Lbs
Connector Plate Fabrication Tolerance = 20%
This truss is designed for a creep factor of 1.5 which is used to calculate total load deflection.

Joaquin Velez, FL Lic. #68182
Robbins Engineering
6904 Parke East Blvd
Tampa, FL, 33610
FL Cert.#5555

November 25,2009

Job	Mark	Quan	Type	Span	Pl-Hl	Left OH	Right OH	Engineering
JOHNSON-SPEC	J15	2	JCA2	50000	7	2- 0- 0	0	T3555357

SPEC LOT15 ROSEWOOD ESTATES

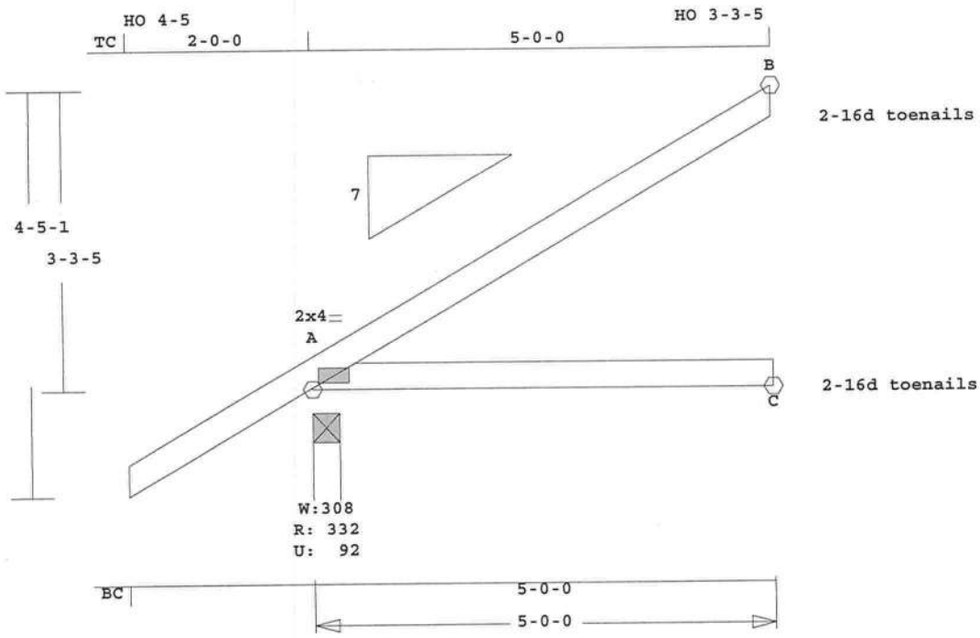

Robbins Engineering, Inc./Online Plus™ APPROX. TRUSS WEIGHT: 25.1 LBS

Online Plus -- Version 25.0.012
RUN DATE: 25-NOV-09

	CSI	-Size-	----Lumber----
TC	0.23	2x 4	SP-#2
BC	0.17	2x 4	SP-#2

Brace truss as follows:

	O.C.	From	To
TC	Cont.	0- 0- 0	5- 0- 0
BC	Cont.	0- 0- 0	5- 0- 0

psf-Ld	Dead	Live
TC	10.0	20.0
BC	10.0	0.0
TC+BC	20.0	20.0

Total 40.0 Spacing 24.0"
Lumber Duration Factor 1.25
Plate Duration Factor 1.25
TC Fb=1.15 Fc=1.10 Ft=1.10
BC Fb=1.10 Fc=1.10 Ft=1.10

Total Load Reactions (Lbs)

Jt	Down	Uplift	Horiz-
A	333	92 U	174 R
C	94		
B	161	82 U	71 R

Jt	Brg Size	Required
A	3.5"	1.5"
C	3.5"	1.5"
B	1.5"	1.5"

Plus 8 Wind Load Case(s)
Plus 1 UBC LL Load Case(s)
Plus 1 DL Load Case(s)

Membr	CSI	P Lbs	Axl-CSI-Bnd
----------Top Chords----------			
A -B	0.23	87 C	0.00 0.23
--------Bottom Chords---------			
A -C	0.17	0 T	0.00 0.17

TL Defl -0.05" in A -C L/999
LL Defl -0.02" in A -C L/999
Shear // Grain in A -B 0.16

Plates for each ply each face.
Plate - MT20 20 Ga, Gross Area
Plate - MT2H 20 Ga, Gross Area

Jt	Type	Plt Size	X	Y	JSI
A	MT20	2.0x 4.0	Ctr	Ctr	0.62

REVIEWED BY:
Robbins Engineering, Inc.
6904 Parke East Blvd.
Tampa, FL 33610

REFER TO ROBBINS ENG. GENERAL NOTES AND SYMBOLS SHEET FOR ADDITIONAL SPECIFICATIONS.

For proper installation of toe-nails, refer to the 2001 National Design Specification (NDS) for Wood Construction

NOTES:
Trusses Manufactured by:
Mayo Truss Co. Inc.
Analysis Conforms To:
FBC2007
TPI 2002
OH Loading
Soffit psf 2.0
This truss has been designed for 20.0 psf LL on the B.C. in areas where a rectangle
3- 6- 0 tall by
2- 0- 0 wide
will fit between the B.C. and any other member.
Design checked for 10 psf non-concurrent LL on BC.
Wind Loads - ANSI / ASCE 7-05
Truss is designed as
Components and Claddings* for Exterior zone location.
Wind Speed: 120 mph
Mean Roof Height: 15-0
Exposure Category: B
Occupancy Factor : 1.00
Building Type: Enclosed
TC Dead Load: 5.0 psf
BC Dead Load: 5.0 psf
Max comp. force 87 Lbs
Max tens. force 69 Lbs
Connector Plate Fabrication Tolerance = 20%
This truss is designed for a creep factor of 1.5 which is used to calculate total load deflection.

Joaquin Velez, FL Lic. #68182
Robbins Engineering
6904 Parke East Blvd
Tampa, FL, 33610
FL Cert.#5555

November 25,2009

Job	Mark	Quan	Type	Span	P1-H1	Left OH	Right OH	Engineering
JOHNSON-SPEC	J16	4	JCA2	30000	7	2- 0- 0	0	T3555358

SPEC LOT15 ROSEWOOD ESTATES

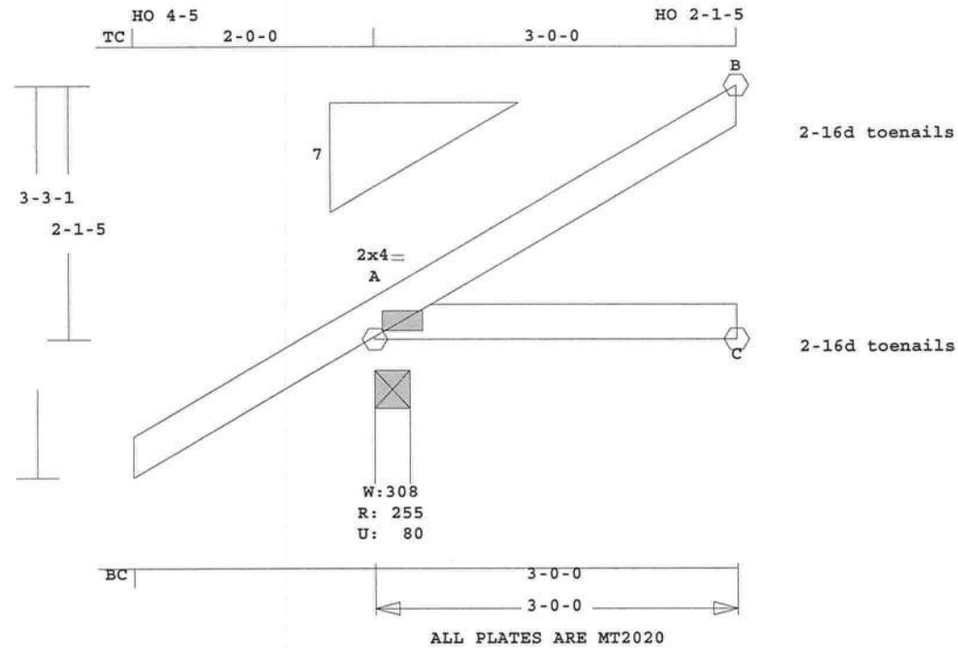

Robbins Engineering, Inc./Online Plus™ APPROX. TRUSS WEIGHT: 16.9 LBS

Online Plus -- Version 25.0.012
RUN DATE: 25-NOV-09

	CSI	-Size-	----Lumber----
TC	0.07	2x 4	SP-#2
BC	0.04	2x 4	SP-#2

Brace truss as follows:

	O.C.	From	To
TC	Cont.	0- 0- 0	3- 0- 0
BC	Cont.	0- 0- 0	3- 0- 0

psf-Ld	Dead	Live
TC	10.0	20.0
BC	10.0	0.0
TC+BC	20.0	20.0

Total 40.0 Spacing 24.0"
Lumber Duration Factor 1.25
Plate Duration Factor 1.25
TC Fb=1.15 Fc=1.10 Ft=1.10
BC Fb=1.10 Fc=1.10 Ft=1.10

Total Load Reactions (Lbs)

Jt	Down	Uplift	Horiz-
A	255	80 U	104 R
C	56		
B	95	49 U	42 R

Jt	Brg Size	Required
A	3.5"	1.5"
C	3.5"	1.5"
B	1.5"	1.5"

Plus 8 Wind Load Case(s)
Plus 1 UBC LL Load Case(s)
Plus 1 DL Load Case(s)

Membr	CSI	P Lbs	Axl-CSI-Bnd
----------Top Chords----------			
A -B	0.07	51 C	0.00 0.07
--------Bottom Chords---------			
A -C	0.04	0 T	0.00 0.04

TL Defl 0.00" in A -C L/999
LL Defl 0.00" in A -C L/999
Shear // Grain in A -B 0.08

Plates for each ply each face.
Plate - MT20 20 Ga, Gross Area
Plate - MT2H 20 Ga, Gross Area

Jt	Type	Plt Size	X	Y	JSI
A	MT20	2.0x 4.0	Ctr	Ctr	0.62

REVIEWED BY:
Robbins Engineering, Inc.
6904 Parke East Blvd.
Tampa, FL 33610

REFER TO ROBBINS ENG. GENERAL NOTES AND SYMBOLS SHEET FOR ADDITIONAL SPECIFICATIONS.

For proper installation of toe-nails, refer to the 2001 National Design Specification (NDS) for Wood Construction

NOTES:
Trusses Manufactured by:
Mayo Truss Co. Inc.
Analysis Conforms To:
FBC2007
TPI 2002
OH Loading
Soffit psf 2.0
This truss has been designed for 20.0 psf LL on the B.C. in areas where a rectangle
3- 6- 0 tall by
2- 0- 0 wide
will fit between the B.C. and any other member.
Design checked for 10 psf non-concurrent LL on BC.
Wind Loads - ANSI / ASCE 7-05
Truss is designed as
Components and Claddings* for Exterior zone location.
Wind Speed: 120 mph
Mean Roof Height: 15-0
Exposure Category: B
Occupancy Factor : 1.00
Building Type: Enclosed
TC Dead Load: 5.0 psf

BC Dead Load: 5.0 psf
Max comp. force 51 Lbs
Max tens. force 41 Lbs
Connector Plate Fabrication Tolerance = 20%
This truss is designed for a creep factor of 1.5 which is used to calculate total load deflection.

Joaquin Velez, FL Lic. #68182
Robbins Engineering
6904 Parke East Blvd
Tampa, FL, 33610
FL Cert.#5555

November 25,2009

Job	Mark	Quan	Type	Span	P1-H1	Left OH	Right OH	Engineering
JOHNSON-SPEC	J17	4	JCA2	10000	7	2- 0- 0	0	T3555359

SPEC LOT15 ROSEWOOD ESTATES

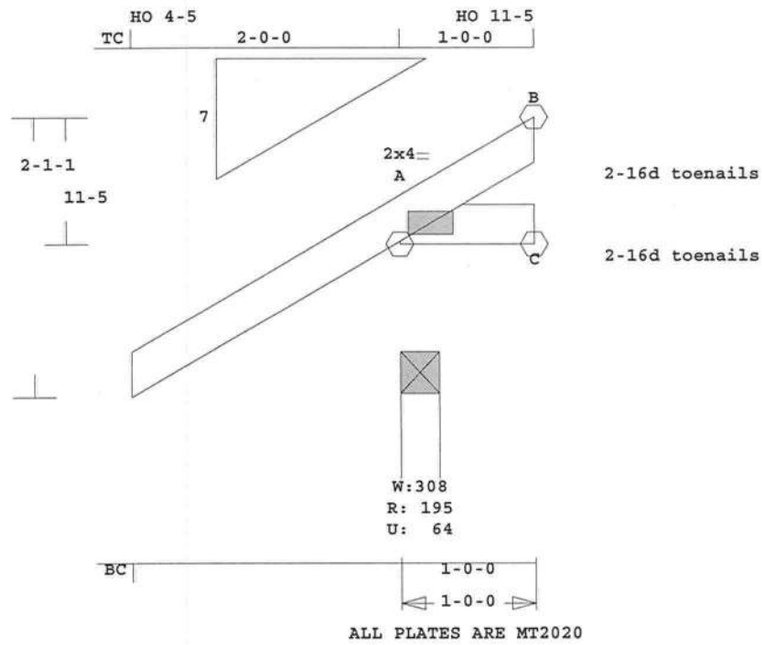

Scale: 0.760" = 1'

Robbins Engineering, Inc./Online Plus™ APPROX. TRUSS WEIGHT: 8.8 LBS

Online Plus -- Version 25.0.012
RUN DATE: 25-NOV-09

	CSI	-Size-	----Lumber----
TC	0.00	2x 4	SP-#2
BC	0.00	2x 4	SP-#2

Brace truss as follows:

	O.C.	From	To
TC	Cont.	0- 0- 0	1- 0- 0
BC	Cont.	0- 0- 0	1- 0- 0

psf-Ld	Dead	Live
TC	10.0	20.0
BC	10.0	0.0
TC+BC	20.0	20.0

Total 40.0 Spacing 24.0"
Lumber Duration Factor 1.25
Plate Duration Factor 1.25
TC Fb=1.15 Fc=1.10 Ft=1.10
BC Fb=1.10 Fc=1.10 Ft=1.10

Total Load Reactions (Lbs)

Jt	Down	Uplift	Horiz-
A	196	65 U	33 R
B	20	13 U	
C	12		13 R

G = Gravity Uplift

Jt	Brg Size	Required
A	3.5"	1.5"
B	1.5"	1.5"
C	1.5"	1.5"

Plus 8 Wind Load Case(s)
Plus 1 UBC LL Load Case(s)
Plus 1 DL Load Case(s)

Membr	CSI	P Lbs	Axl-CSI-Bnd
----------Top Chords----------			
A -B	0.00	9 C	
--------Bottom Chords---------			
A -C	0.00	13 T	

TL Defl 0.00" in A -C L/999
LL Defl 0.00" in A -C L/999
Shear // Grain in A -B 0.02

Plates for each ply each face.
Plate - MT20 20 Ga, Gross Area
Plate - MT2H 20 Ga, Gross Area

Jt	Type	Plt Size	X	Y	JSI
A	MT20	2.0x 4.0	Ctr	Ctr	0.62

REVIEWED BY:
Robbins Engineering, Inc.
6904 Parke East Blvd.
Tampa, FL 33610

REFER TO ROBBINS ENG. GENERAL NOTES AND SYMBOLS SHEET FOR ADDITIONAL SPECIFICATIONS.

For proper installation of toe-nails, refer to the 2001 National Design Specification (NDS) for Wood Construction

NOTES:
Trusses Manufactured by:
Mayo Truss Co. Inc.
Analysis Conforms To:
FBC2007
TPI 2002
OH Loading
Soffit psf 2.0
This truss has been designed for 20.0 psf LL on the B.C. in areas where a rectangle
3- 6- 0 tall by
2- 0- 0 wide
will fit between the B.C. and any other member.
Design checked for 10 psf non-concurrent LL on BC.
Wind Loads - ANSI / ASCE 7-05
Truss is designed as
Components and Claddings*
for Exterior zone location.
Wind Speed: 120 mph
Mean Roof Height: 15-0
Exposure Category: B
Occupancy Factor : 1.00
Building Type: Enclosed

TC Dead Load: 5.0 psf
BC Dead Load: 5.0 psf
Max comp. force 9 Lbs
Max tens. force 13 Lbs
Connector Plate Fabrication Tolerance = 20%
This truss is designed for a creep factor of 1.5 which is used to calculate total load deflection.

Joaquin Velez, FL Lic. #68182
Robbins Engineering
6904 Parke East Blvd
Tampa, FL, 33610
FL Cert.#5555

November 25,2009

Job	Mark	Quan	Type	Span	Pl-Hl	Left OH	Right OH	Engineering
JOHNSON-SPEC	J19	1	HHIP	70000	7	2- 0- 0	0	T3555360

SPEC LOT15 ROSEWOOD ESTATES

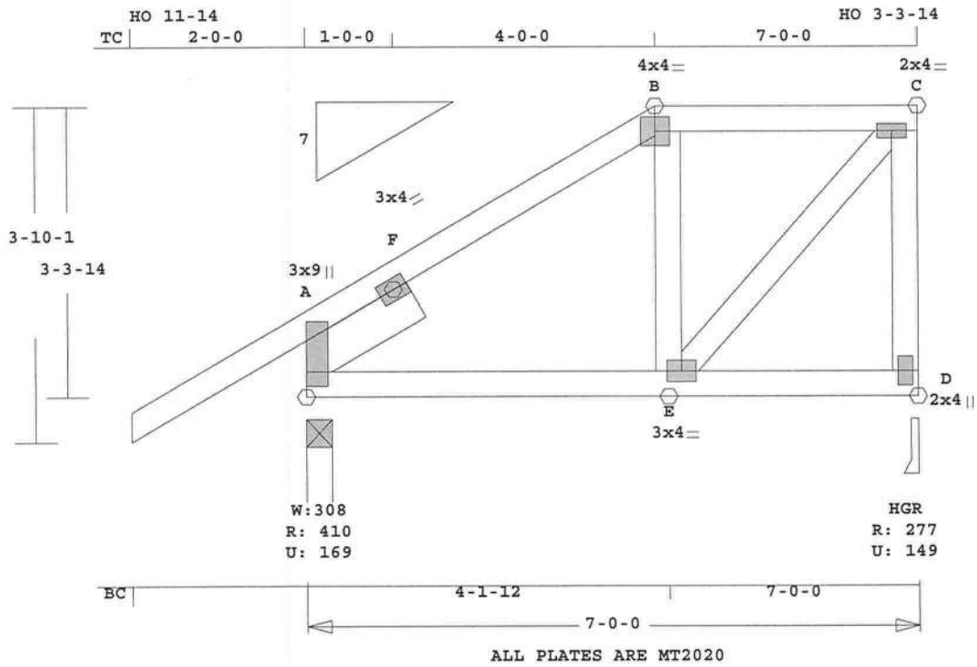

Robbins Engineering, Inc./Online Plus™ APPROX. TRUSS WEIGHT: 53.8 LBS

Online Plus -- Version 25.0.012
RUN DATE: 25-NOV-09

	CSI	-Size-	----Lumber----
TC	0.15	2x 4	SP-#2
BC	0.26	2x 4	SP-#2
WB	0.12	2x 4	SP-#2
SL	0.02	2x 6	SP-#2

Brace truss as follows:

	O.C.	From	To
TC	Cont.	0- 0- 0	7- 0- 0
BC	Cont.	0- 0- 0	7- 0- 0

psf-Ld	Dead	Live
TC	10.0	20.0
BC	10.0	0.0
TC+BC	20.0	20.0

Total 40.0 Spacing 24.0"
Lumber Duration Factor 1.25
Plate Duration Factor 1.25
TC Fb=1.15 Fc=1.10 Ft=1.10
BC Fb=1.10 Fc=1.10 Ft=1.10

Total Load Reactions (Lbs)

Jt	Down	Uplift	Horiz-
A	411	170 U	54 R
D	277	149 U	117 R

Jt	Brg Size	Required
A	3.5"	1.5"
D	3.5"	1.5"

Plus 9 Wind Load Case(s)
Plus 1 UBC LL Load Case(s)
Plus 1 DL Load Case(s)

Membr	CSI	P Lbs	Axl-CSI-Bnd	
----------Top Chords----------				
A -F	0.05	258 T	0.00	0.05
F -B	0.11	429 T	0.01	0.10
B -C	0.15	432 T	0.05	0.10
--------Bottom Chords---------				
A -E	0.26	241 C	0.00	0.26
E -D	0.15	99 T	0.01	0.14
----------Webs----------				
E -B	0.02	199 C		
E -C	0.12	513 C		
D -C	0.07	526 T WindLd		
----------Sliders----------				
A -F	0.02	239 T		

TL Defl -0.01" in A -E L/999
LL Defl 0.00" in A -E L/999
Shear // Grain in A -E 0.21

Plates for each ply each face.
Plate - MT20 20 Ga, Gross Area
Plate - MT2H 20 Ga, Gross Area

Jt	Type	Plt Size	X	Y	JSI
A	MT20	3.0x 9.0	1.5	0.3	0.58
F	MT20	3.0x 4.0	-0.1	-0.1	0.09
B	MT20	4.0x 4.0	Ctr	Ctr	0.58
C	MT20	2.0x 4.0	Ctr	Ctr	0.54
E	MT20	3.0x 4.0	Ctr	Ctr	0.24
D	MT20	2.0x 4.0	Ctr	Ctr	0.43

REVIEWED BY:
Robbins Engineering, Inc.
6904 Parke East Blvd.
Tampa, FL 33610

REFER TO ROBBINS ENG. GENERAL NOTES AND SYMBOLS SHEET FOR ADDITIONAL SPECIFICATIONS.

NOTES:
Trusses Manufactured by:
Mayo Truss Co. Inc.
Analysis Conforms To:
FBC2007
TPI 2002
OH Loading
Soffit psf 2.0
This truss has been designed for 20.0 psf LL on the B.C. in areas where a rectangle
3- 6- 0 tall by
2- 0- 0 wide
will fit between the B.C. and any other member.
Design checked for 10 psf non-concurrent LL on BC.
Wind Loads - ANSI / ASCE 7-05

Truss is designed as Components and Claddings* for Exterior zone location.
Wind Speed: 120 mph
Mean Roof Height: 15-0
Exposure Category: B
Occupancy Factor : 1.00
Building Type: Enclosed
TC Dead Load: 5.0 psf
BC Dead Load: 5.0 psf
User-defined wind-exposed BC regions --From-- ---To---
0- 0- 0 7- 0- 0
Max comp. force 513 Lbs
Max tens. force 526 Lbs
Connector Plate Fabrication Tolerance = 20%
This truss is designed for a creep factor of 1.5 which is used to calculate total load deflection.

Joaquin Velez, FL Lic. #68182
Robbins Engineering
6904 Parke East Blvd
Tampa, FL, 33610
FL Cert.#5555

November 25,2009

CERTIFICATE OF

OCCUPANCY

COLUMBIA COUNTY, FLORIDA

Department of Building and Zoning Inspection

This Certificate of Occupancy is issued to the below named permit holder for the building and premises at the below named location, and certifies that the work has been completed in accordance with the Columbia County Building Code.

Parcel Number 10-4S-16-02853-415 **Building permit No.** 000029234

Use Classification RE-NEW 28279, SFD **Fire:** 6.42

Permit Holder PATRICIA JOHNSON **Waste:** 16.75

Owner of Building PATRICIA JOHNSON **Total:** 23.17

Location: 24 SW SCOTT PLACE, LAKE CITY, FL 32024

Date: 09/26/2011

Building Inspector

POST IN A CONSPICUOUS PLACE
(Business Places Only)

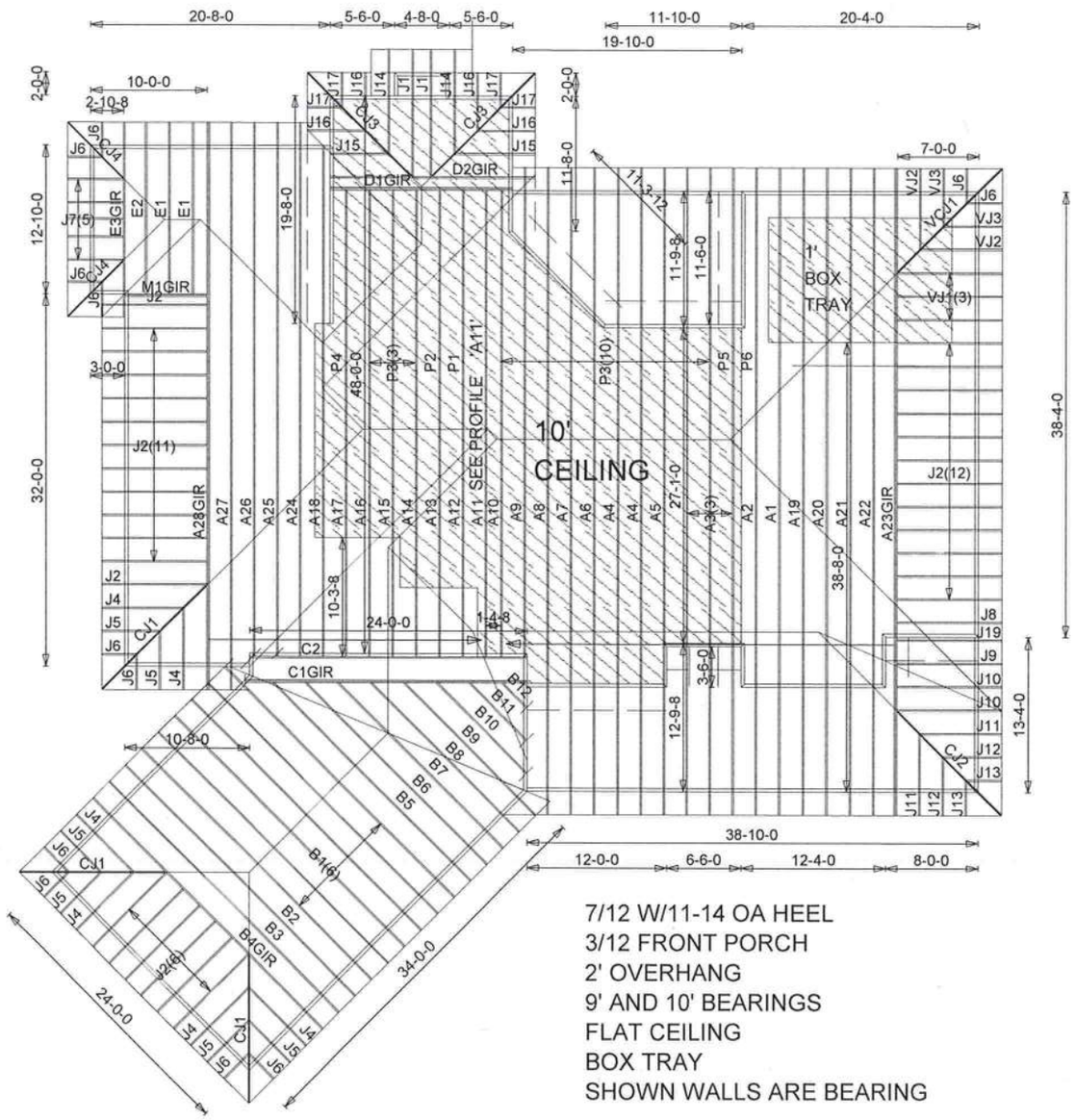

7/12 W/11-14 OA HEEL
3/12 FRONT PORCH
2' OVERHANG
9' AND 10' BEARINGS
FLAT CEILING
BOX TRAY
SHOWN WALLS ARE BEARING

Mayo Truss Co. Inc.
845 East US 27
MAYO, FL 32066
(386)294-3988
(877)-558-6262

JOHNSON BUILDERS

SPEC HOUSE LOT 15 ROSEWOOD ESTATES
LAKE CITY

120 MPH ASCE WIND LOAD

Roof Loading	Account: CONTRACTORS
TC Live: 20.00 psf	Job: JOHNSON-SPEC
TC Dead: 10.00 psf	Designer: C. LITTLE
BC Live: 0.00 psf	Checker:
BC Dead: 10.00 psf	Date: 12-02-09
TC Stress Inc: 25.00	
BC Stress Inc: 25.00	
Spacing: 2- 0- 0 o.c.	

NOTICE OF COMMENCEMENT

Clerk's Office Stamp

Inst:201112003397 Date:3/7/2011 Time:10:26 AM
DC,P.DeWitt Cason,Columbia County Page 1 of 1 B:1210 P:2434

Tax Parcel Identification Number:

10-45-16-02853-415

THE UNDERSIGNED hereby gives notice that improvements will be made to certain real property, and in accordance with Section 713.13 of the Florida Statutes, the following information is provided in this **NOTICE OF COMMENCEMENT.**

1. Description of property *(legal description)*: Russwood Estates Unit 4 Lot 15
   a) Street *(job)* Address: 234 SW Scott Place Lake City, FL 32024
2. General description of improvements: New Const of Single Family home
3. Owner Information
   a) Name and address: John S and Patricia M Johnson 204 SW Dusty Gl Lake City, FL 32024
   b) Name and address of fee simple titleholder (if other than owner) –
   c) Interest in property –
4. Contractor Information
   a) Name and address: Patricia M. Johnson 204 SW Dusty Gl Lake City FL 32024
   b) Telephone No.: 386-255-4038 Fax No. (Opt.)
5. Surety Information
   a) Name and address: –
   b) Amount of Bond: –
   c) Telephone No.: – Fax No. (Opt.)
6. Lender
   a) Name and address: –
   b) Phone No.
7. Identity of person within the State of Florida designated by owner upon whom notices or other documents may be served:
   a) Name and address:
   b) Telephone No.: Fax No. (Opt.)
8. In addition to himself, owner designates the following person to receive a copy of the Lienor's Notice as provided in Section 713.13(l)(b), Florida Statutes:
   a) Name and address:
   b) Telephone No.: Fax No. (Opt.)
9. Expiration date of Notice of Commencement (the expiration date is one year from the date of recording unless a different date is specified):

WARNING TO OWNER: ANY PAYMENTS MADE BY THE OWNER AFTER THE EXPIRATION OF THE NOTICE OF COMMENCEMENT ARE CONSIDERED IMPROPER PAYMENTS UNDER CHAPTER 713, PART I, SECTION 713.13, FLORIDA STATUTES, AND CAN RESULT IN YOUR PAYING TWICE FOR IMPROVEMENTS TO YOUR PROPERTY; A NOTICE OF COMMENCEMENT MUST BE RECORDED AND POSTED ON THE JOB SITE BEFORE THE FIRST INSPECTION. IF YOU INTEND TO OBTAIN FINANCING, CONSULT YOUR LENDER OR AN ATTORNEY BEFORE COMMENCING WORK OR RECORDING YOUR NOTICE OF COMMENCEMENT.

STATE OF FLORIDA
COUNTY OF COLUMBIA

10. Patricia M Johnson
Signature of Owner or Owner's Authorized Office/Director/Partner/Manager

Patricia M Johnson
Printed Name

The foregoing instrument was acknowledged before me, a Florida Notary, this 7 day of March, 20 11, by: Patricia Johnson as Owner (type of authority, e.g. officer, trustee, attorney fact) for Patricia Johnson (name of party on behalf of whom instrument was executed).

Personally Known ✓ OR Produced Identification ____ Type

Notary Signature Lauri Hodson

Notary Stamp or Seal:

LAURIE HODSON
MY COMMISSION # DD 805657
EXPIRES: July 14, 2012
Bonded Thru Notary Public Underwriters

—AND—

11. Verification pursuant to Section 92.525, Florida Statutes. Under penalties of perjury, I declare that I have read the foregoing and that the facts stated in it are true to the best of my knowledge and belief.

Patricia M Johnson
Signature of Natural Person Signing (in line #10 above.)

DATE 03/07/2011

Columbia County Building Permit

This Permit Must Be Prominently Posted on Premises During Construction

PERMIT
000029234

APPLICANT PATRICIA JOHNSON PHONE 755-4038

ADDRESS 204 SW DUSTY GLEN LAKE CITY FL 32024

OWNER PATRICIA JOHNSON PHONE 755-4038

ADDRESS 234 SW SCOTT PLACE LAKE CITY FL 32024

CONTRACTOR PATRICIA JOHNSON PHONE 755-4038

LOCATION OF PROPERTY 90 W, L 247, R TROY ST, R RUSSWOOD TERR, L BETHANY PL, R DOROTHY, R SCOTT PL, @ END ON RIGHT

TYPE DEVELOPMENT RE-NEW 28279, SFD ESTIMATED COST OF CONSTRUCTION 0.00

HEATED FLOOR AREA _____ TOTAL AREA _____ HEIGHT ____ STORIES ____

FOUNDATION _____ WALLS _____ ROOF PITCH _____ FLOOR _____

LAND USE & ZONING RSF-2 MAX. HEIGHT _____

Minimum Set Back Requirments: STREET-FRONT _____ REAR _____ SIDE _____

NO. EX.D.U. 0 FLOOD ZONE X DEVELOPMENT PERMIT NO. _____

PARCEL ID 10-4S-16-02853-415 SUBDIVISION RUSSWOOD ESTATES

LOT 15 BLOCK ____ PHASE ____ UNIT ____ TOTAL ACRES 0.75

Culvert Permit No.	Culvert Waiver	Contractor's License Number	Applicant/Owner/Contractor	
		RR28281158	Patricia M Johnson	
EXISTING	09-0581-N	BK	HD	N
Driveway Connection	Septic Tank Number	LU & Zoning checked by	Approved for Issuance	New Resident

COMMENTS: RE-NEWAL PERMIT # 28279-EXPIRED, 75% COMPLETED

EXISTING PLANS MOVED TO THIS FILE

NEW NOC RECORDED Check # or Cash 2213

FOR BUILDING & ZONING DEPARTMENT ONLY

(footer/Slab)

Temporary Power _____ date/app. by Foundation _____ date/app. by Monolithic _____ date/app. by

Under slab rough-in plumbing _____ date/app. by Slab _____ date/app. by Sheathing/Nailing _____ date/app. by

Framing _____ date/app. by Insulation _____ date/app. by

Rough-in plumbing above slab and below wood floor _____ date/app. by Electrical rough-in _____ date/app. by

Heat & Air Duct _____ date/app. by Peri. beam (Lintel) _____ date/app. by Pool _____ date/app. by

Permanent power _____ date/app. by C.O. Final _____ date/app. by Culvert _____ date/app. by

Pump pole _____ date/app. by Utility Pole _____ date/app. by M/H tie downs, blocking, electricity and plumbing _____ date/app. by

Reconnection _____ date/app. by RV _____ date/app. by Re-roof _____ date/app. by

BUILDING PERMIT FEE $ 0.00 CERTIFICATION FEE $ 0.00 SURCHARGE FEE $ 0.00

MISC. FEES $ 288.75 ZONING CERT. FEE $ ____ FIRE FEE $ 0.00 WASTE FEE $ _____

FLOOD DEVELOPMENT FEE $ ____ FLOOD ZONE FEE $ ____ CULVERT FEE $ ____ **TOTAL FEE** 288.75

INSPECTORS OFFICE _____ CLERKS OFFICE CH

NOTICE: IN ADDITION TO THE REQUIREMENTS OF THIS PERMIT, THERE MAY BE ADDITIONAL RESTRICTIONS APPLICABLE TO THIS PROPERTY THAT MAY BE FOUND IN THE PUBLIC RECORDS OF THIS COUNTY. AND THERE MAY BE ADDITIONAL PERMITS REQUIRED FROM OTHER GOVERNMENTAL ENTITIES SUCH AS WATER MANAGEMENT DISTRICTS, STATE AGENCIES, OR FEDERAL AGENCIES.

"WARNING TO OWNER: YOUR FAILURE TO RECORD A NOTICE OF COMMENCEMENT MAY RESULT IN YOUR PAYING TWICE FOR IMPROVEMENTS TO YOUR PROPERTY. IF YOU INTEND TO OBTAIN FINANCING, CONSULT WITH YOUR LENDER OR AN ATTORNEY BEFORE RECORDING YOUR NOTICE OF COMMENCEMENT."

EVERY PERMIT ISSUED SHALL BECOME INVALID UNLESS THE WORK AUTHORIZED BY SUCH PERMIT IS COMMENCED WITHIN 180 DAYS AFTER ITS ISSUANCE, OR IF THE WORK AUTHORIZED BY SUCH PERMIT IS SUSPENDED OR ABANDONED FOR A PERIOD OF 180 DAYS AFTER THE TIME THE WORK IS COMMENCED. A VALID PERMIT RECIEVES AN APPROVED INSPECTION EVERY 180 DAYS. WORK SHALL BE CONSIDERED NOT SUSPENDED, ABANDONED OR INVALID WHEN THE PERMIT HAS RECIEVED AN APPROVED INSPECTION WITHIN 180 DAYS OT THE PREVIOUS INSPECTION.

The Issuance of this Permit Does Not Waive Compliance by Permittee with Deed Restrictions.

DATE 12/16/2009

Columbia County Building Permit

This Permit Must Be Prominently Posted on Premises During Construction

PERMIT
000028279

APPLICANT PATRICIA JOHNSON PHONE 755-4038

ADDRESS 204 SW DUSTY GLEN LAKE CITY FL 32024

OWNER PATRICIA JOHNSON PHONE 755-4038

ADDRESS 234 SW SCOTT PLACE LAKE CITY FL 32024

CONTRACTOR PATRICIA JOHNSON PHONE 755-4038

LOCATION OF PROPERTY 90W, TL ON 247S, TR TROY ST., TR RUSSWOOD TERR., TL BETHANY PL, TR DOROTHY, TR SCOTT PL., AT END ON RIGHT

TYPE DEVELOPMENT SFD,UTILITY ESTIMATED COST OF CONSTRUCTION 230600.00

HEATED FLOOR AREA 3124.00 TOTAL AREA 4612.00 HEIGHT ____ STORIES 1

FOUNDATION CONC WALLS FRAMED ROOF PITCH 7/12 FLOOR SLAB

LAND USE & ZONING RSF-2 MAX. HEIGHT 24

Minimum Set Back Requirments: STREET-FRONT 25.00 REAR 15.00 SIDE 10.00

NO. EX.D.U. 0 FLOOD ZONE X DEVELOPMENT PERMIT NO. ____

PARCEL ID 10-4S-16-02853-415 SUBDIVISION RUSSWOOD ESTATES

LOT 15 BLOCK ____ PHASE ____ UNIT ____ TOTAL ACRES 0.75

000001776		RR28281158		
Culvert Permit No.	Culvert Waiver	Contractor's License Number	Applicant/Owner/Contractor	
WAIVER	09-581	BK	WR	Y
Driveway Connection	Septic Tank Number	LU & Zoning checked by	Approved for Issuance	New Resident

COMMENTS: ONE FOOT ABOVE THE ROAD, NOC ON FILE

Check # or Cash 1998

FOR BUILDING & ZONING DEPARTMENT ONLY

Temporary Power ____ date/app. by Foundation ____ date/app. by Monolithic (footer/Slab) ____ date/app. by

Under slab rough-in plumbing ____ date/app. by Slab ____ date/app. by Sheathing/Nailing ____ date/app. by

Framing ____ date/app. by Insulation ____ date/app. by

Rough-in plumbing above slab and below wood floor ____ date/app. by Electrical rough-in ____ date/app. by

Heat & Air Duct ____ date/app. by Peri. beam (Lintel) ____ date/app. by Pool ____ date/app. by

Permanent power ____ date/app. by C.O. Final ____ date/app. by Culvert ____ date/app. by

Pump pole ____ date/app. by Utility Pole ____ date/app. by M/H tie downs, blocking, electricity and plumbing ____ date/app. by

Reconnection ____ date/app. by RV ____ date/app. by Re-roof ____ date/app. by

BUILDING PERMIT FEE $ 1155.00 CERTIFICATION FEE $ 23.06 SURCHARGE FEE $ 23.06

MISC. FEES $ 0.00 ZONING CERT. FEE $ 50.00 FIRE FEE $ 0.00 WASTE FEE $ ____

FLOOD DEVELOPMENT FEE $ ____ FLOOD ZONE FEE $ 25.00 CULVERT FEE $ ____ **TOTAL FEE** 1276.12

INSPECTORS OFFICE ____ CLERKS OFFICE ____

NOTICE: IN ADDITION TO THE REQUIREMENTS OF THIS PERMIT, THERE MAY BE ADDITIONAL RESTRICTIONS APPLICABLE TO THIS PROPERTY THAT MAY BE FOUND IN THE PUBLIC RECORDS OF THIS COUNTY. AND THERE MAY BE ADDITIONAL PERMITS REQUIRED FROM OTHER GOVERNMENTAL ENTITIES SUCH AS WATER MANAGEMENT DISTRICTS, STATE AGENCIES, OR FEDERAL AGENCIES.

"WARNING TO OWNER: YOUR FAILURE TO RECORD A NOTICE OF COMMENCEMENT MAY RESULT IN YOUR PAYING TWICE FOR IMPROVEMENTS TO YOUR PROPERTY. IF YOU INTEND TO OBTAIN FINANCING, CONSULT WITH YOUR LENDER OR AN ATTORNEY BEFORE RECORDING YOUR NOTICE OF COMMENCEMENT."

EVERY PERMIT ISSUED SHALL BECOME INVALID UNLESS THE WORK AUTHORIZED BY SUCH PERMIT IS COMMENCED WITHIN 180 DAYS AFTER ITS ISSUANCE, OR IF THE WORK AUTHORIZED BY SUCH PERMIT IS SUSPENDED OR ABANDONED FOR A PERIOD OF 180 DAYS AFTER THE TIME THE WORK IS COMMENCED. A VALID PERMIT RECIEVES AN APPROVED INSPECTION EVERY 180 DAYS. WORK SHALL BE CONSIDERED NOT SUSPENDED, ABANDONED OR INVALID WHEN THE PERMIT HAS RECIEVED AN APPROVED INSPECTION WITHIN 180 DAYS OT THE PREVIOUS INSPECTION.

The Issuance of this Permit Does Not Waive Compliance by Permittee with Deed Restrictions.