Lumber design values are in accordance with ANSI/TPI 1 section 6.3
These truss designs rely on lumber values established by others.

RE: 0524-036 - Shaw

MiTek, Inc.
16023 Swingley Ridge Rd.
Chesterfield, MO 63017
314.434.1200

**Site Information:**

Customer Info: William Scott Construction Project Name: . Model: .
Lot/Block: . Subdivision: .
Address: ., .
City: Live Oak State: FL

**Name Address and License # of Structural Engineer of Record, If there is one, for the building.**

Name: License #:
Address:
City: State:

**General Truss Engineering Criteria & Design Loads (Individual Truss Design Drawings Show Special Loading Conditions):**

Design Code: FBC2023/TPI2014 Design Program: MiTek 20/20 8.7
Wind Code: ASCE 7-22 Wind Speed: 130 mph
Roof Load: 40.0 psf Floor Load: N/A psf

This package includes 21 individual, Truss Design Drawings and 0 Additional Drawings.
With my seal affixed to this sheet, I hereby certify that I am the Truss Design Engineer and this index sheet conforms to 61G15-31.003, section 5 of the Florida Board of Professional Engineers Rules.

| No. | Seal# | Truss Name | Date |
|---|---|---|---|
| 1 | T33926997 | A01 | 5/21/24 |
| 2 | T33926998 | A02 | 5/21/24 |
| 3 | T33926999 | A03 | 5/21/24 |
| 4 | T33927000 | A04 | 5/21/24 |
| 5 | T33927001 | A05 | 5/21/24 |
| 6 | T33927002 | A06 | 5/21/24 |
| 7 | T33927003 | B01 | 5/21/24 |
| 8 | T33927004 | B02 | 5/21/24 |
| 9 | T33927005 | B03 | 5/21/24 |
| 10 | T33927006 | B04 | 5/21/24 |
| 11 | T33927007 | B05 | 5/21/24 |
| 12 | T33927008 | CJ01 | 5/21/24 |
| 13 | T33927009 | J01 | 5/21/24 |
| 14 | T33927010 | J02 | 5/21/24 |
| 15 | T33927011 | M01 | 5/21/24 |
| 16 | T33927012 | M02 | 5/21/24 |
| 17 | T33927013 | M03 | 5/21/24 |
| 18 | T33927014 | PB01 | 5/21/24 |
| 19 | T33927015 | PB02 | 5/21/24 |
| 20 | T33927016 | PB03 | 5/21/24 |
| 21 | T33927017 | PB04 | 5/21/24 |

Columbia County Building Department
Plans Reviewed for Code Compliance
State of Florida

The truss drawing(s) referenced above have been prepared b
under my direct supervision based on the parameters
provided by Mayo Truss Company, Inc..

Truss Design Engineer's Name: Lee, Julius
My license renewal date for the state of Florida is February 28, 2025.

**IMPORTANT NOTE:** The seal on these truss component designs is a certification that the engineer named is licensed in the jurisdiction(s) identified and that the designs comply with ANSI/TPI 1. These designs are based upon parameters shown (e.g., loads, supports, dimensions, shapes and design codes), which were given to MiTek or TRENCO. Any project specific information included is for MiTek's or TRENCO's customers file reference purpose only, and was not taken into account in the preparation of these designs. MiTek or TRENCO has not independently verified the applicability of the design parameters or the designs for any particular building. Before use, the building designer should verify applicability of design parameters and properly incorporate these designs into the overall building design per ANSI/TPI 1, Chapter 2.

No. 34869
STATE OF FLORIDA
PROFESSIONAL ENGINEER

Julius Lee PE No. 34869
MiTek Inc. DBA MiTek USA FL Cert 6634
16023 Swingley Ridge Rd. Chesterfield, MO 63017
Date:

May 21,2024

Lee, Julius

| Job | Truss | Truss Type | Qty | Ply | Shaw T33926997 |
|---|---|---|---|---|---|
| 0524-036 | A01 | Piggyback Base Structural Gable | 2 | 1 | Job Reference (optional) |



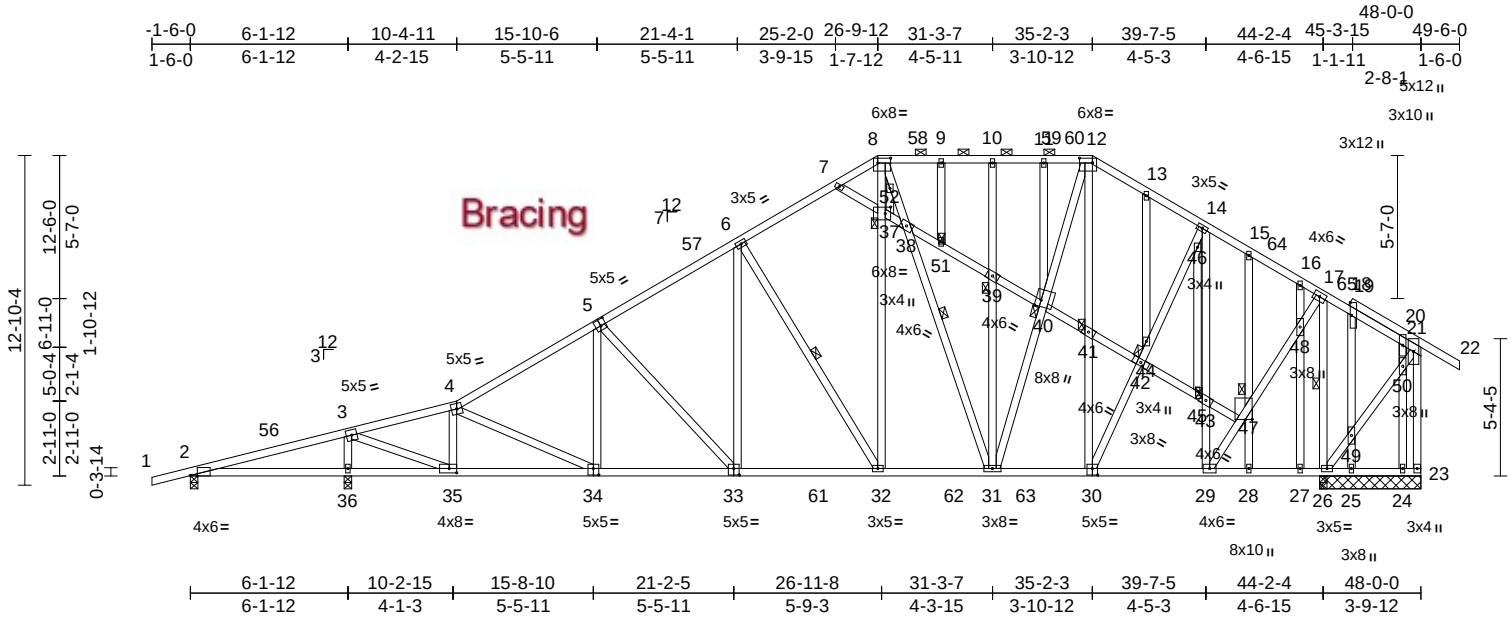


Scale = 1:89.9

Plate Offsets (X, Y): [2:0-3-4,Edge], [5:0-2-8,0-3-0], [8:0-6-0,0-2-4], [12:0-6-0,0-2-4], [30:0-2-8,0-3-0], [33:0-2-8,0-3-0], [34:0-2-8,0-3-0], [35:0-3-8,0-2-0], [37:0-2-8,0-3-0], [40:0-3-0,0-2-8], [47:0-0-4,0-3-4]

| Loading | (psf) | Spacing | 2-0-0 | CSI | | DEFL | in | (loc) | l/defl | L/d | PLATES | GRIP |
|---|---|---|---|---|---|---|---|---|---|---|---|---|
| TCLL (roof) | 20.0 | Plate Grip DOL | 1.25 | TC | 0.53 | Vert(LL) | -0.14 | 32-33 | >999 | 240 | MT20 | 244/190 |
| TCDL | 10.0 | Lumber DOL | 1.25 | BC | 0.54 | Vert(CT) | -0.25 | 32-33 | >999 | 180 | | |
| BCLL | 0.0* | Rep Stress Incr | YES | WB | 0.63 | Horz(CT) | 0.05 | 26 | n/a | n/a | | |
| BCDL | 10.0 | Code | FBC2023/TPI2014 | Matrix-AS | | | | | | | Weight: 482 lb | FT = 20% |

**LUMBER**

TOP CHORD 2x4 SP No.2
BOT CHORD 2x4 SP No.2
WEBS 2x4 SP No.2
OTHERS 2x4 SP No.2

**BRACING**

TOP CHORD Structural wood sheathing directly applied, except end verticals, and 2-0-0 oc purlins (5-7-8 max.): 8-12.
BOT CHORD Rigid ceiling directly applied.
WEBS 1 Row at midpt 6-32, 17-26, 8-31
JOINTS 1 Brace at Jt(s): 37, 39, 40, 41, 42, 43, 47, 51

**REACTIONS** (size) 2=0-3-8, 23=3-11-8, 24=3-11-8, 25=3-11-8, 26=3-11-8, 36=0-3-8
Max Horiz 2=287 (LC 11)
Max Uplift 2=-67 (LC 8), 23=-442 (LC 25), 24=-49 (LC 23), 26=-97 (LC 12)
Max Grav 2=85 (LC 23), 23=20 (LC 12), 24=61 (LC 11), 25=104 (LC 19), 26=2420 (LC 17), 36=2333 (LC 17)

**FORCES** (lb) - Maximum Compression/Maximum Tension

TOP CHORD 1-2=0/22, 2-3=-172/1180, 3-4=-1776/143, 4-6=-2214/226, 6-7=-1454/252, 7-8=-1239/246, 8-9=-1082/256, 9-10=-1082/256, 10-11=-1082/256, 11-12=-1082/256, 21-23=-2/397, 12-13=-996/258, 13-14=-1005/216, 14-15=-617/166, 15-16=-644/145, 16-17=-591/116, 17-19=-12/312, 19-20=-49/434, 20-21=-58/302, 21-22=0/43
BOT CHORD 2-36=-994/85, 35-36=-994/85, 32-35=-178/1999, 31-32=-88/1279, 29-31=-58/872, 28-29=-356/161, 27-28=-356/161, 26-27=-356/161, 25-26=-74/80, 24-25=-74/80, 23-24=-74/80
WEBS 4-35=-939/116, 6-32=-719/112, 32-37=-33/840, 8-37=-23/639, 31-40=-69/838, 12-40=-86/888, 30-41=-510/59, 12-41=-495/56, 17-26=-1435/117, 26-49=-519/134, 49-50=-529/137, 21-50=-547/145, 31-39=-213/91, 10-39=-182/78, 8-52=-145/0, 38-52=-404/0, 31-38=-489/23, 5-34=0/196, 4-34=-19/147, 5-33=-453/72, 6-33=0/572, 3-36=-2084/161, 3-35=-161/2961, 30-42=-2/741, 42-44=-5/768, 44-46=-16/832, 14-46=0/591, 29-43=-1070/131, 14-43=-813/88, 29-47=-142/1505, 47-48=-76/1524, 17-48=-60/1393, 7-37=-222/87, 37-38=-79/90, 38-51=0/105, 39-51=-34/72, 39-40=-19/85, 40-41=-64/60, 41-42=-36/68, 42-45=-48/56, 43-45=-162/68, 43-47=-46/46, 11-40=-88/20, 13-44=-107/54, 45-46=-276/24, 15-47=-64/19, 28-47=-20/49, 16-48=-150/36, 27-48=-297/52, 19-49=-301/63, 25-49=-317/66, 20-50=-57/177, 24-50=-44/165, 9-51=-78/32, 37-52=0/291

**NOTES**

1) Unbalanced roof live loads have been considered for this design.
2) Wind: ASCE 7-22; Vult=130mph (3-second gust) Vasd=101mph; TCDL=6.0psf; BCDL=6.0psf; h=15ft; B=45ft; L=48ft; eave=6ft; Cat. II; Exp B; Enclosed; MWFRS (directional) and C-C Zone3 -1-6-0 to 3-3-10, Zone1 3-3-10 to 26-9-12, Zone2 26-9-12 to 33-7-4, Zone1 33-7-4 to 35-2-3, Zone2 35-2-3 to 41-11-10, Zone1 41-11-10 to 49-6-0 zone; cantilever left and right exposed ; end vertical left and right exposed;C-C for members and forces & MWFRS for reactions shown; Lumber DOL=1.60 plate grip DOL=1.60
3) Truss designed for wind loads in the plane of the truss only. For studs exposed to wind (normal to the face), see Standard Industry Gable End Details as applicable, or consult qualified building designer as per ANSI/TPI 1.
4) Building Designer / Project engineer responsible for verifying applied roof live load shown covers rain loading requirements specific to the use of this truss component.
5) Provide adequate drainage to prevent water ponding.
6) All plates are 2x4 MT20 unless otherwise indicated.
7) Gable studs spaced at 2-0-0 oc.
8) This truss has been designed for a 10.0 psf bottom chord live load nonconcurrent with any other live loads.
9) * This truss has been designed for a live load of 20.0psf on the bottom chord in all areas where a rectangle 3-06-00 tall by 2-00-00 wide will fit between the bottom chord and any other members, with BCDL = 10.0psf.
10) All bearings are assumed to be SP No.2 .
11) Provide mechanical connection (by others) of truss to bearing plate capable of withstanding 67 lb uplift at joint 2, 442 lb uplift at joint 23, 97 lb uplift at joint 26 and 49 lb uplift at joint 24.

Julius Lee PE No. 34869
MiTek Inc. DBA MiTek USA FL Cert 6634
16023 Swingley Ridge Rd. Chesterfield, MO 63017
Date:

May 21,2024

Continued on page 2

WARNING - Verify design parameters and READ NOTES ON THIS AND INCLUDED MITEK REFERENCE PAGE MII-7473 rev. 1/2/2023 BEFORE USE.
Design valid for use only with MiTek® connectors. This design is based only upon parameters shown, and is for an individual building component, not a truss system. Before use, the building designer must verify the applicability of design parameters and properly incorporate this design into the overall building design. Bracing indicated is to prevent buckling of individual truss web and/or chord members only. Additional temporary and permanent bracing is always required for stability and to prevent collapse with possible personal injury and property damage. For general guidance regarding the fabrication, storage, delivery, erection and bracing of trusses and truss systems, see **ANSI/TPI1 Quality Criteria and DSB-22** available from Truss Plate Institute (www.tpinst.org) and **BCSI Building Component Safety Information** available from the Structural Building Component Association (www.sbcscomponents.com)

MiTek®
16023 Swingley Ridge Rd.
Chesterfield, MO 63017
314.434.1200 / MiTek-US.com

12) This truss design requires that a minimum of 7/16" structural wood sheathing be applied directly to the top chord and 1/2" gypsum sheetrock be applied directly to the bottom chord.
13) Graphical purlin representation does not depict the size or the orientation of the purlin along the top and/or bottom chord.

**LOAD CASE(S)** Standard


**WARNING - Verify design parameters and READ NOTES ON THIS AND INCLUDED MITEK REFERENCE PAGE MII-7473 rev. 1/2/2023 BEFORE USE.**

Design valid for use only with MiTek® connectors. This design is based only upon parameters shown, and is for an individual building component, not a truss system. Before use, the building designer must verify the applicability of design parameters and properly incorporate this design into the overall building design. Bracing indicated is to prevent buckling of individual truss web and/or chord members only. Additional temporary and permanent bracing is always required for stability and to prevent collapse with possible personal injury and property damage. For general guidance regarding the fabrication, storage, delivery, erection and bracing of trusses and truss systems, see **ANSI/TPI1 Quality Criteria and DSB-22** available from Truss Plate Institute (www.tpinst.org) and **BCSI Building Component Safety Information** available from the Structural Building Component Association (www.sbcscomponents.com)

MiTek®
16023 Swingley Ridge Rd.
Chesterfield, MO 63017
314.434.1200 / MiTek-US.com

| Job | Truss | Truss Type | Qty | Ply | Shaw |
|---|---|---|---|---|---|
| 0524-036 | A02 | Piggyback Base | 3 | 1 | T33926998<br>Job Reference (optional) |



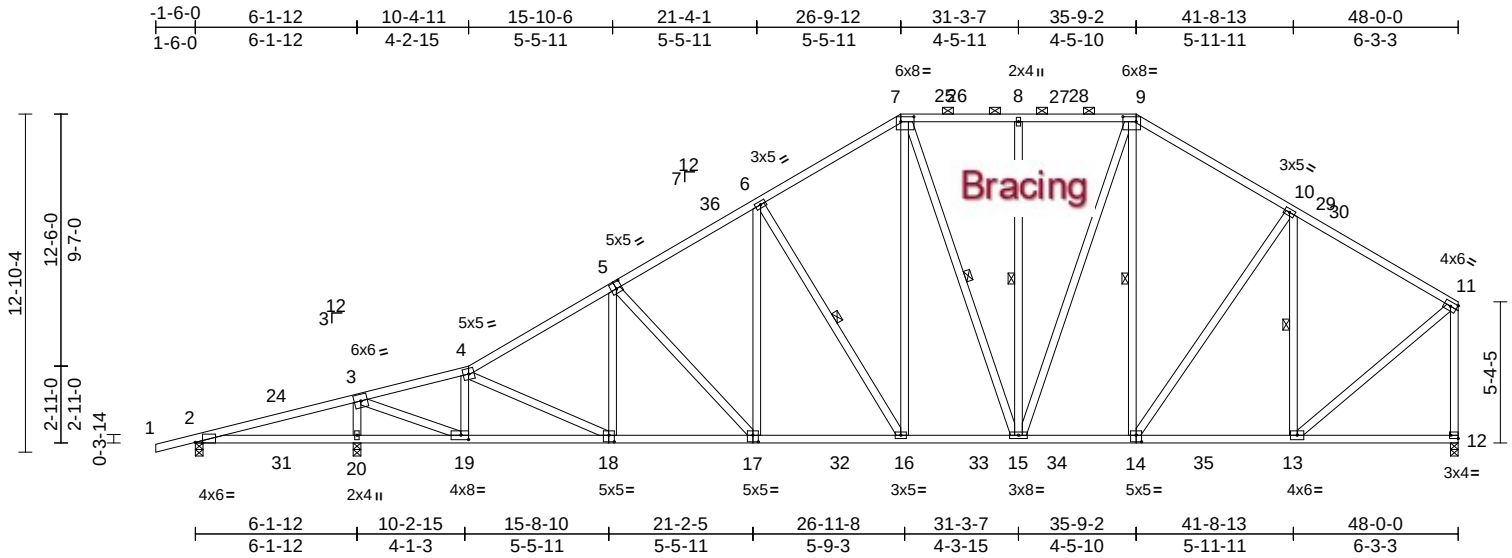


Scale = 1:87.6

Plate Offsets (X, Y): [2:0-3-4,Edge], [5:0-2-8,0-3-0], [7:0-6-0,0-2-4], [9:0-6-0,0-2-4], [12:Edge,0-1-8], [14:0-2-8,0-3-0], [17:0-2-8,0-3-0], [18:0-2-8,0-3-0], [19:0-3-8,0-2-0]

| Loading | (psf) | Spacing | 2-0-0 | CSI | | DEFL | in | (loc) | l/defl | L/d | PLATES | GRIP |
|---|---|---|---|---|---|---|---|---|---|---|---|---|
| TCLL (roof) | 20.0 | Plate Grip DOL | 1.25 | TC | 0.84 | Vert(LL) | -0.17 | 16-17 | >999 | 240 | MT20 | 244/190 |
| TCDL | 10.0 | Lumber DOL | 1.25 | BC | 0.60 | Vert(CT) | -0.30 | 16-17 | >999 | 180 | | |
| BCLL | 0.0* | Rep Stress Incr | YES | WB | 0.74 | Horz(CT) | 0.07 | 12 | n/a | n/a | | |
| BCDL | 10.0 | Code | FBC2023/TPI2014 | Matrix-AS | | | | | | | Weight: 358 lb | FT = 20% |

**LUMBER**
TOP CHORD 2x4 SP No.2
BOT CHORD 2x4 SP No.2
WEBS 2x4 SP No.2

**BRACING**
TOP CHORD Structural wood sheathing directly applied, except end verticals, and 2-0-0 oc purlins (4-8-12 max.): 7-9.
BOT CHORD Rigid ceiling directly applied.
WEBS 1 Row at midpt 6-16, 9-14, 10-13, 8-15, 7-15

**REACTIONS** (size) 2=0-3-8, 12=0-3-8, 20=0-3-8
Max Horiz 2=285 (LC 11)
Max Uplift 2=-118 (LC 8), 20=-53 (LC 12)
Max Grav 2=49 (LC 23), 12=1868 (LC 18), 20=2577 (LC 17)

**FORCES** (lb) - Maximum Compression/Maximum Tension
TOP CHORD 1-2=0/22, 2-3=-204/1371, 3-4=-2052/115, 7-8=-1522/294, 8-9=-1522/294, 9-10=-1635/283, 10-11=-1443/202, 11-12=-1776/250, 4-6=-2620/249, 6-7=-1903/294
BOT CHORD 2-20=-1181/65, 19-20=-1181/65, 16-19=-235/2342, 15-16=-152/1667, 13-15=-155/1371, 12-13=-66/82
WEBS 4-19=-1111/147, 6-16=-759/126, 7-16=-45/873, 9-15=-73/634, 9-14=-167/92, 10-14=0/353, 10-13=-693/164, 11-13=-116/1484, 8-15=-279/105, 7-15=-227/78, 5-18=0/173, 4-18=-65/221, 5-17=-410/60, 6-17=0/540, 3-20=-2367/204, 3-19=-173/3455

**NOTES**
1) Unbalanced roof live loads have been considered for this design.
2) Wind: ASCE 7-22; Vult=130mph (3-second gust) Vasd=101mph; TCDL=6.0psf; BCDL=6.0psf; h=15ft; B=45ft; L=48ft; eave=6ft; Cat. II; Exp B; Enclosed; MWFRS (directional) and C-C Zone3 -1-6-0 to 3-3-10, Zone1 3-3-10 to 26-9-12, Zone2 26-9-12 to 33-7-4, Zone1 33-7-4 to 35-9-2, Zone2 35-9-2 to 42-6-9, Zone1 42-6-9 to 47-10-4 zone; cantilever left and right exposed ; end vertical left and right exposed; porch left exposed;C-C for members and forces & MWFRS for reactions shown; Lumber DOL=1.60 plate grip DOL=1.60
3) Building Designer / Project engineer responsible for verifying applied roof live load shown covers rain loading requirements specific to the use of this truss component.
4) Provide adequate drainage to prevent water ponding.
5) This truss has been designed for a 10.0 psf bottom chord live load nonconcurrent with any other live loads.
6) * This truss has been designed for a live load of 20.0psf on the bottom chord in all areas where a rectangle 3-06-00 tall by 2-00-00 wide will fit between the bottom chord and any other members, with BCDL = 10.0psf.
7) All bearings are assumed to be SP No.2 .
8) Provide mechanical connection (by others) of truss to bearing plate capable of withstanding 118 lb uplift at joint 2 and 53 lb uplift at joint 20.
9) This truss design requires that a minimum of 7/16" structural wood sheathing be applied directly to the top chord and 1/2" gypsum sheetrock be applied directly to the bottom chord.
10) Graphical purlin representation does not depict the size or the orientation of the purlin along the top and/or bottom chord.

**LOAD CASE(S)** Standard

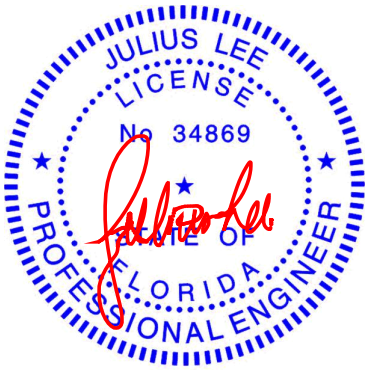


Julius Lee PE No. 34869
MiTek Inc. DBA MiTek USA FL Cert 6634
16023 Swingley Ridge Rd. Chesterfield, MO 63017
Date:

May 21,2024

**WARNING - Verify design parameters and READ NOTES ON THIS AND INCLUDED MITEK REFERENCE PAGE MII-7473 rev. 1/2/2023 BEFORE USE.**
Design valid for use only with MiTek® connectors. This design is based only upon parameters shown, and is for an individual building component, not a truss system. Before use, the building designer must verify the applicability of design parameters and properly incorporate this design into the overall building design. Bracing indicated is to prevent buckling of individual truss web and/or chord members only. Additional temporary and permanent bracing is always required for stability and to prevent collapse with possible personal injury and property damage. For general guidance regarding the fabrication, storage, delivery, erection and bracing of trusses and truss systems, see **ANSI/TPI1 Quality Criteria and DSB-22** available from Truss Plate Institute (www.tpinst.org) and **BCSI Building Component Safety Information** available from the Structural Building Component Association (www.sbcscomponents.com)

MiTek®
16023 Swingley Ridge Rd.
Chesterfield, MO 63017
314.434.1200 / MiTek-US.com

| Job | Truss | Truss Type | Qty | Ply | Shaw |
|---|---|---|---|---|---|
| 0524-036 | A03 | Piggyback Base | 1 | 1 | T33926999<br>Job Reference (optional) |



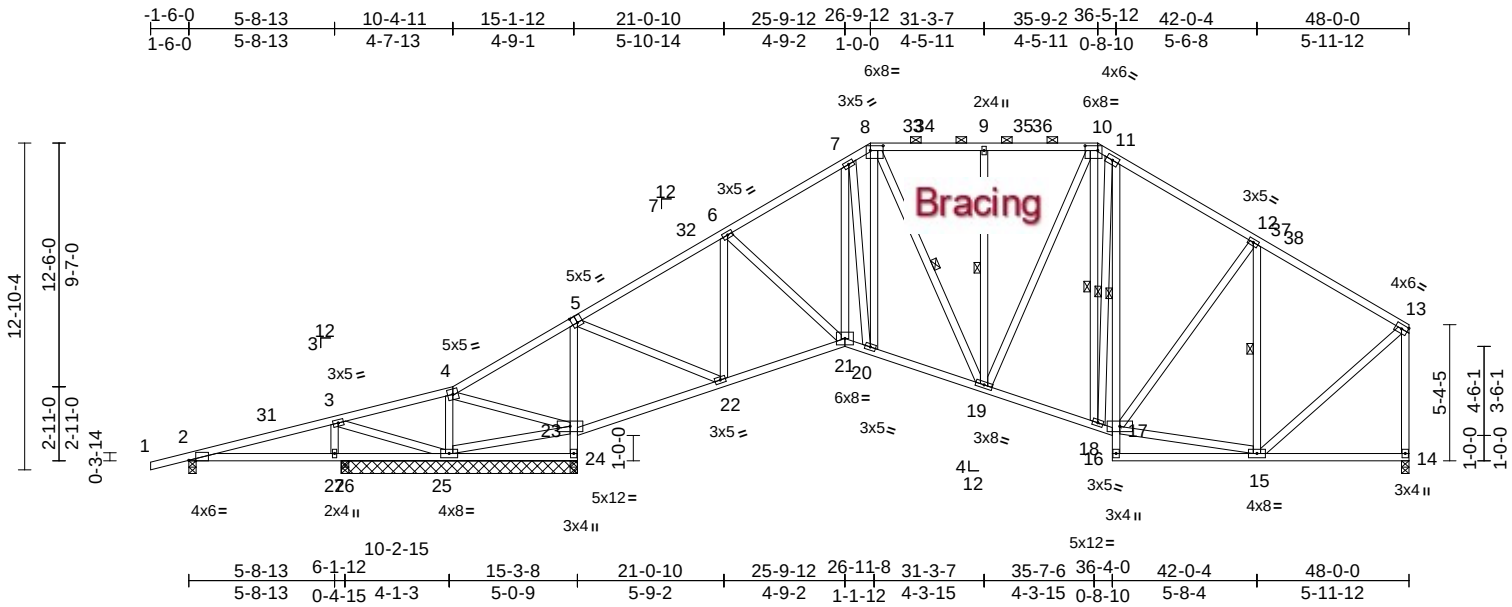


Scale = 1:90.6

Plate Offsets (X, Y): [2:0-3-4,Edge], [5:0-2-8,0-3-4], [8:0-6-0,0-2-4], [10:0-6-0,0-2-4]

| Loading | (psf) | Spacing | 2-0-0 | CSI | | DEFL | in | (loc) | l/defl | L/d | PLATES | GRIP |
|---|---|---|---|---|---|---|---|---|---|---|---|---|
| TCLL (roof) | 20.0 | Plate Grip DOL | 1.25 | TC | 0.47 | Vert(LL) | -0.06 | 21 | >999 | 240 | MT20 | 244/190 |
| TCDL | 10.0 | Lumber DOL | 1.25 | BC | 0.38 | Vert(CT) | -0.11 | 21-22 | >999 | 180 | | |
| BCLL | 0.0* | Rep Stress Incr | YES | WB | 0.53 | Horz(CT) | 0.07 | 14 | n/a | n/a | | |
| BCDL | 10.0 | Code | FBC2023/TPI2014 | Matrix-AS | | | | | | | Weight: 392 lb | FT = 20% |

**LUMBER**
TOP CHORD 2x4 SP No.2
BOT CHORD 2x4 SP No.2
WEBS 2x4 SP No.2

**BRACING**
TOP CHORD Structural wood sheathing directly applied, except end verticals, and 2-0-0 oc purlins (5-9-14 max.): 8-10.
BOT CHORD Rigid ceiling directly applied. Except:
1 Row at midpt 11-17
WEBS 1 Row at midpt 12-15, 10-18, 8-19, 9-19, 11-18

**REACTIONS** (size) 2=0-3-8, 14=0-3-8, 24=9-3-8, 25=9-3-8, 26=0-3-8
Max Horiz 2=285 (LC 11)
Max Uplift 2=-39 (LC 12), 14=-4 (LC 12), 25=-33 (LC 8), 26=-6 (LC 12)
Max Grav 2=324 (LC 23), 14=1210 (LC 1), 24=2040 (LC 1), 25=193 (LC 18), 26=194 (LC 23)

**FORCES** (lb) - Maximum Compression/Maximum Tension
TOP CHORD 1-2=0/22, 2-3=-228/86, 3-4=-142/472, 4-6=-856/926, 6-7=-1271/237, 7-8=-1143/292, 8-9=-967/252, 9-10=-967/252, 10-11=-981/326, 11-12=-1030/259, 12-13=-877/192, 13-14=-1156/199
BOT CHORD 2-27=-64/145, 26-27=-64/145, 25-26=-64/145, 24-25=-27/2, 23-24=-1989/320, 5-23=-1704/296, 22-23=-720/110, 21-22=-124/725, 20-21=-130/1067, 19-20=-119/1047, 18-19=-96/864, 17-18=-89/836, 16-17=0/102, 11-17=-191/0, 15-16=-1/95, 14-15=-65/81
WEBS 3-27=-63/82, 3-25=-505/57, 4-25=-51/250, 23-25=-400/72, 4-23=-314/99, 5-22=-191/1448, 8-20=-126/471, 15-17=-124/631, 12-17=0/234, 12-15=-599/161, 13-15=-74/899, 10-18=-189/170, 8-19=-126/116, 10-19=-49/434, 9-19=-290/115, 6-21=-21/490, 6-22=-879/203, 7-21=-28/264, 7-20=-386/158, 11-18=-98/168

**NOTES**
1) Unbalanced roof live loads have been considered for this design.
2) Wind: ASCE 7-22; Vult=130mph (3-second gust) Vasd=101mph; TCDL=6.0psf; BCDL=6.0psf; h=15ft; B=45ft; L=48ft; eave=6ft; Cat. II; Exp B; Enclosed; MWFRS (directional) and C-C Zone3 -1-6-0 to 3-3-10, Zone1 3-3-10 to 26-9-12, Zone2 26-9-12 to 33-7-4, Zone1 33-7-4 to 35-9-2, Zone2 35-9-2 to 42-6-9, Zone1 42-6-9 to 47-10-4 zone; cantilever left and right exposed ; end vertical left and right exposed;C-C for members and forces & MWFRS for reactions shown; Lumber DOL=1.60 plate grip DOL=1.60
3) Building Designer / Project engineer responsible for verifying applied roof live load shown covers rain loading requirements specific to the use of this truss component.
4) Provide adequate drainage to prevent water ponding.
5) This truss has been designed for a 10.0 psf bottom chord live load nonconcurrent with any other live loads.
6) * This truss has been designed for a live load of 20.0psf on the bottom chord in all areas where a rectangle 3-06-00 tall by 2-00-00 wide will fit between the bottom chord and any other members.
7) All bearings are assumed to be SP No.2 .
8) Provide mechanical connection (by others) of truss to bearing plate capable of withstanding 39 lb uplift at joint 2, 4 lb uplift at joint 14, 33 lb uplift at joint 25 and 6 lb uplift at joint 26.
9) This truss design requires that a minimum of 7/16" structural wood sheathing be applied directly to the top chord and 1/2" gypsum sheetrock be applied directly to the bottom chord.
10) Graphical purlin representation does not depict the size or the orientation of the purlin along the top and/or bottom chord.

**LOAD CASE(S)** Standard

Julius Lee PE No. 34869
MiTek Inc. DBA MiTek USA FL Cert 6634
16023 Swingley Ridge Rd. Chesterfield, MO 63017
Date:

May 21,2024

**WARNING - Verify design parameters and READ NOTES ON THIS AND INCLUDED MITEK REFERENCE PAGE MII-7473 rev. 1/2/2023 BEFORE USE.**
Design valid for use only with MiTek® connectors. This design is based only upon parameters shown, and is for an individual building component, not a truss system. Before use, the building designer must verify the applicability of design parameters and properly incorporate this design into the overall building design. Bracing indicated is to prevent buckling of individual truss web and/or chord members only. Additional temporary and permanent bracing is always required for stability and to prevent collapse with possible personal injury and property damage. For general guidance regarding the fabrication, storage, delivery, erection and bracing of trusses and truss systems, see **ANSI/TPI1 Quality Criteria and DSB-22** available from Truss Plate Institute (www.tpinst.org) and **BCSI Building Component Safety Information** available from the Structural Building Component Association (www.sbcscomponents.com)

MiTek®
16023 Swingley Ridge Rd.
Chesterfield, MO 63017
314.434.1200 / MiTek-US.com

| Job | Truss | Truss Type | Qty | Ply | Shaw |
|---|---|---|---|---|---|
| 0524-036 | A04 | Piggyback Base | 4 | 1 | T33927000<br>Job Reference (optional) |



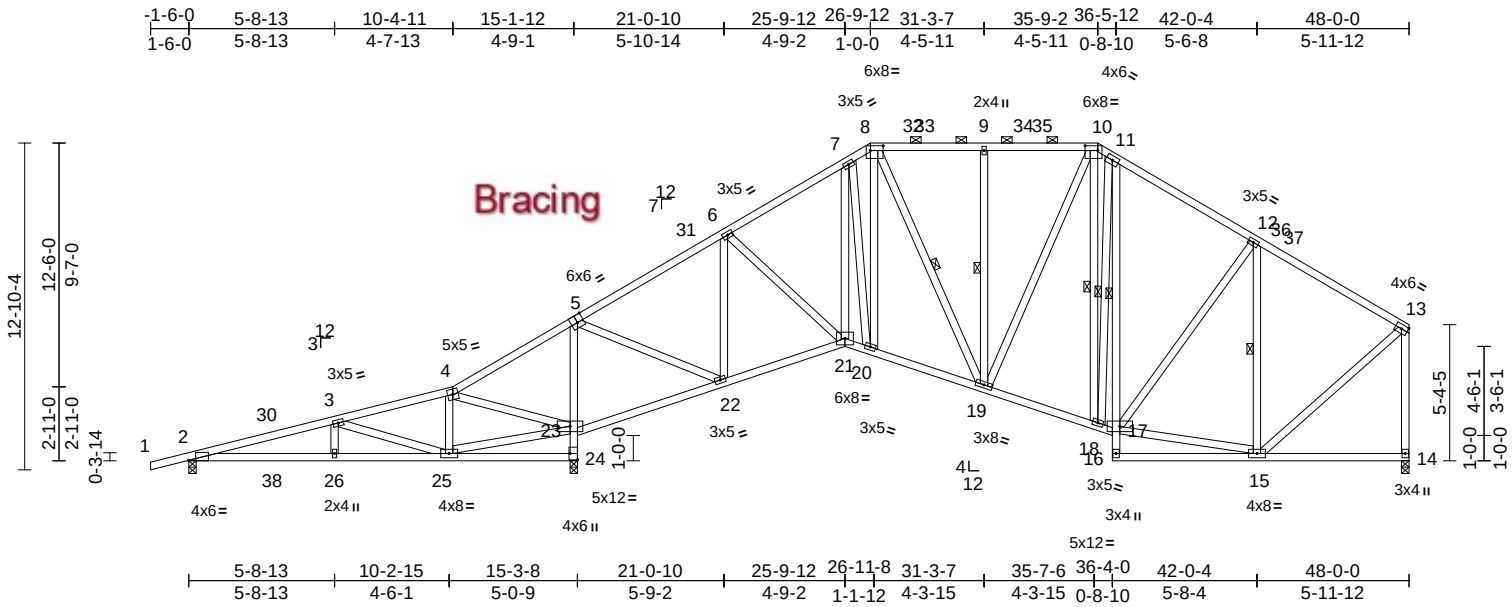


Scale = 1:90.6

Plate Offsets (X, Y): [2:0-3-4,Edge], [5:0-3-0,Edge], [8:0-6-0,0-2-4], [10:0-6-0,0-2-4], [24:Edge,0-3-8]

| Loading | (psf) | Spacing | 2-0-0 | CSI | | DEFL | in | (loc) | l/defl | L/d | PLATES | GRIP |
|---|---|---|---|---|---|---|---|---|---|---|---|---|
| TCLL (roof) | 20.0 | Plate Grip DOL | 1.25 | TC | 0.48 | Vert(LL) | 0.08 | 26-29 | >999 | 240 | MT20 | 244/190 |
| TCDL | 10.0 | Lumber DOL | 1.25 | BC | 0.41 | Vert(CT) | -0.10 | 21-22 | >999 | 180 | | |
| BCLL | 0.0* | Rep Stress Incr | YES | WB | 0.57 | Horz(CT) | 0.06 | 14 | n/a | n/a | | |
| BCDL | 10.0 | Code | FBC2023/TPI2014 | Matrix-AS | | | | | | | Weight: 392 lb | FT = 20% |

**LUMBER**
TOP CHORD 2x4 SP No.2
BOT CHORD 2x4 SP No.2
WEBS 2x4 SP No.2

**BRACING**
TOP CHORD Structural wood sheathing directly applied, except end verticals, and 2-0-0 oc purlins (5-11-15 max.): 8-10.
BOT CHORD Rigid ceiling directly applied. Except:
1 Row at midpt 11-17
WEBS 1 Row at midpt 12-15, 10-18, 8-19, 9-19, 11-18

**REACTIONS** (size) 2=0-3-8, 14=0-3-8, 24=0-3-8
Max Horiz 2=285 (LC 11)
Max Uplift 2=-140 (LC 12), 24=-165 (LC 12)
Max Grav 2=431 (LC 23), 14=1179 (LC 1), 24=2318 (LC 1)

**FORCES** (lb) - Maximum Compression/Maximum Tension
TOP CHORD 1-2=0/22, 2-3=-561/668, 3-4=-88/443, 4-6=-693/1165, 6-7=-1161/144, 7-8=-1055/215, 8-9=-913/200, 9-10=-913/200, 10-11=-939/269, 11-12=-991/207, 12-13=-852/159, 13-14=-1125/173
BOT CHORD 2-26=-541/526, 25-26=-541/526, 24-25=-51/0, 23-24=-2270/526, 5-23=-1798/377, 22-23=-964/443, 21-22=0/662, 20-21=-49/1002, 19-20=-45/982, 18-19=-66/829, 17-18=-61/803, 16-17=0/102, 11-17=-181/0, 15-16=-1/95, 14-15=-65/81
WEBS 3-26=-159/200, 3-25=-799/498, 4-25=-287/441, 23-25=-309/26, 4-23=-640/462, 5-22=-276/1549, 8-20=-43/430, 15-17=-106/609, 12-17=0/212, 12-15=-576/142, 13-15=-51/871, 6-21=-74/553, 6-22=-946/259, 7-21=0/230, 7-20=-348/81, 10-18=-212/172, 8-19=-217/123, 10-19=-10/382, 9-19=-291/116, 11-18=-103/179

**NOTES**
1) Unbalanced roof live loads have been considered for this design.
2) Wind: ASCE 7-22; Vult=130mph (3-second gust) Vasd=101mph; TCDL=6.0psf; BCDL=6.0psf; h=15ft; B=45ft; L=48ft; eave=6ft; Cat. II; Exp B; Enclosed; MWFRS (directional) and C-C Zone3 -1-6-0 to 3-3-10, Zone1 3-3-10 to 26-9-12, Zone2 26-9-12 to 33-7-4, Zone1 33-7-4 to 35-9-2, Zone2 35-9-2 to 42-6-9, Zone1 42-6-9 to 47-10-4 zone; cantilever left and right exposed ; end vertical left and right exposed; porch left exposed;C-C for members and forces & MWFRS for reactions shown; Lumber DOL=1.60 plate grip DOL=1.60
3) Building Designer / Project engineer responsible for verifying applied roof live load shown covers rain loading requirements specific to the use of this truss component.
4) Provide adequate drainage to prevent water ponding.
5) This truss has been designed for a 10.0 psf bottom chord live load nonconcurrent with any other live loads.
6) * This truss has been designed for a live load of 20.0psf on the bottom chord in all areas where a rectangle 3-06-00 tall by 2-00-00 wide will fit between the bottom chord and any other members.
7) All bearings are assumed to be SP No.2 .
8) Provide mechanical connection (by others) of truss to bearing plate capable of withstanding 140 lb uplift at joint 2 and 165 lb uplift at joint 24.
9) This truss design requires that a minimum of 7/16" structural wood sheathing be applied directly to the top chord and 1/2" gypsum sheetrock be applied directly to the bottom chord.
10) Graphical purlin representation does not depict the size or the orientation of the purlin along the top and/or bottom chord.

**LOAD CASE(S)** Standard

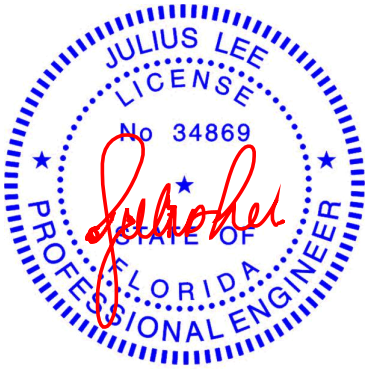


Julius Lee PE No. 34869
MiTek Inc. DBA MiTek USA FL Cert 6634
16023 Swingley Ridge Rd. Chesterfield, MO 63017
Date:

May 21,2024

**WARNING - Verify design parameters and READ NOTES ON THIS AND INCLUDED MITEK REFERENCE PAGE MII-7473 rev. 1/2/2023 BEFORE USE.**
Design valid for use only with MiTek® connectors. This design is based only upon parameters shown, and is for an individual building component, not a truss system. Before use, the building designer must verify the applicability of design parameters and properly incorporate this design into the overall building design. Bracing indicated is to prevent buckling of individual truss web and/or chord members only. Additional temporary and permanent bracing is always required for stability and to prevent collapse with possible personal injury and property damage. For general guidance regarding the fabrication, storage, delivery, erection and bracing of trusses and truss systems, see **ANSI/TPI1 Quality Criteria and DSB-22** available from Truss Plate Institute (www.tpinst.org) and **BCSI Building Component Safety Information** available from the Structural Building Component Association (www.sbcscomponents.com)

MiTek®
16023 Swingley Ridge Rd.
Chesterfield, MO 63017
314.434.1200 / MiTek-US.com

| Job | Truss | Truss Type | Qty | Ply | Shaw |
|---|---|---|---|---|---|
| 0524-036 | A05 | Piggyback Base | 3 | 1 | T33927001<br>Job Reference (optional) |



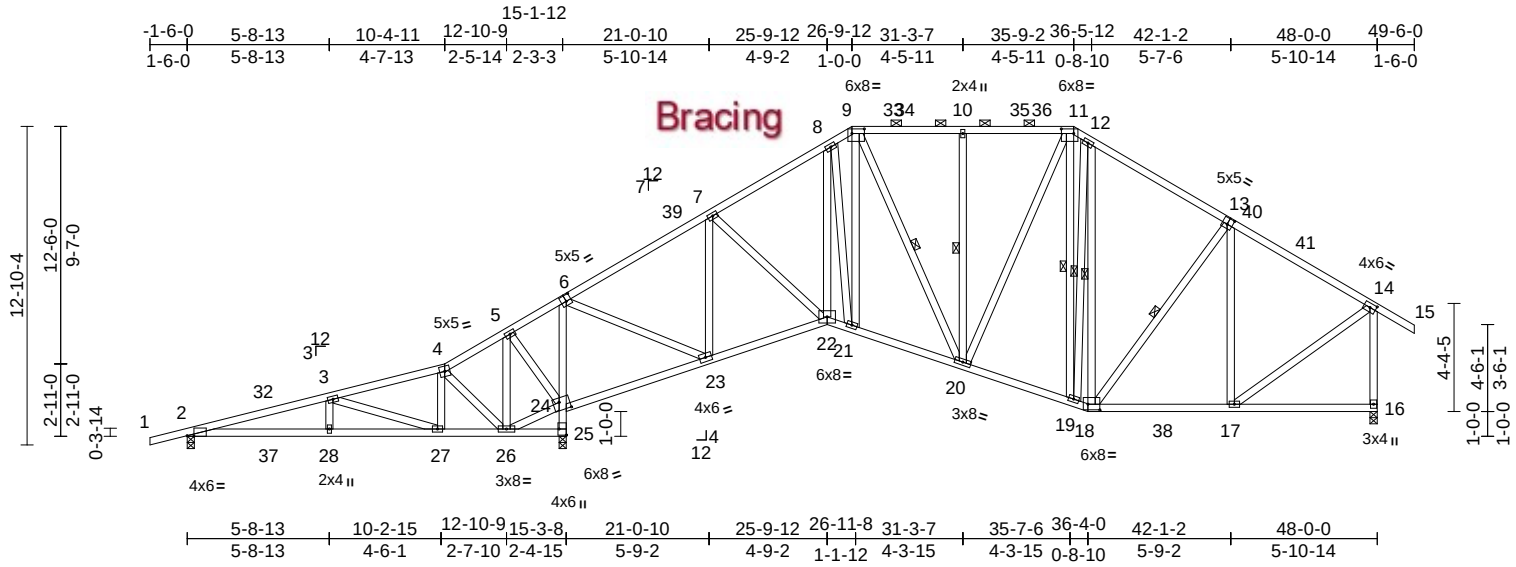


Scale = 1:92.9

Plate Offsets (X, Y): [2:0-3-4,Edge], [6:0-2-8,0-3-0], [9:0-6-0,0-2-4], [11:0-6-0,0-2-4], [13:0-2-8,0-3-0], [14:0-2-14,0-2-0], [18:0-5-12,0-2-12], [24:0-5-0,0-4-0], [25:Edge,0-3-8]

| Loading | (psf) | Spacing | 2-0-0 | CSI | | DEFL | in | (loc) | l/defl | L/d | PLATES | GRIP |
|---|---|---|---|---|---|---|---|---|---|---|---|---|
| TCLL (roof) | 20.0 | Plate Grip DOL | 1.25 | TC | 0.41 | Vert(LL) | 0.08 | 28-31 | >999 | 240 | MT20 | 244/190 |
| TCDL | 10.0 | Lumber DOL | 1.25 | BC | 0.48 | Vert(CT) | -0.11 | 17-18 | >999 | 180 | | |
| BCLL | 0.0* | Rep Stress Incr | YES | WB | 0.58 | Horz(CT) | 0.06 | 16 | n/a | n/a | | |
| BCDL | 10.0 | Code | FBC2023/TPI2014 | Matrix-AS | | | | | | | Weight: 386 lb | FT = 20% |

**LUMBER**
TOP CHORD 2x4 SP No.2
BOT CHORD 2x4 SP No.2
WEBS 2x4 SP No.2

**BRACING**
TOP CHORD Structural wood sheathing directly applied, except end verticals, and 2-0-0 oc purlins (5-8-13 max.): 9-11.
BOT CHORD Rigid ceiling directly applied.
WEBS 1 Row at midpt 11-19, 12-19, 12-18, 9-20, 10-20, 13-18

**REACTIONS** (size) 2=0-3-8, 16=0-3-8, 25=0-3-8
Max Horiz 2=269 (LC 11)
Max Uplift 2=-144 (LC 12), 16=-25 (LC 12), 25=-163 (LC 12)
Max Grav 2=433 (LC 23), 16=1445 (LC 18), 25=2476 (LC 17)

**FORCES** (lb) - Maximum Compression/Maximum Tension
TOP CHORD 1-2=0/22, 2-3=-587/662, 3-4=-64/538, 9-10=-1032/189, 10-11=-1032/189, 14-16=-1359/230, 4-5=-234/856, 5-7=-809/1249, 7-8=-1306/119, 8-9=-1197/194, 11-12=-1097/283, 12-14=-1121/210, 14-15=0/50
BOT CHORD 2-28=-548/557, 27-28=-548/557, 26-27=-405/0, 25-26=-75/0, 24-25=-2455/538, 6-24=-1915/323, 23-24=-1054/441, 22-23=0/785, 21-22=0/1198, 20-21=0/1185, 19-20=0/963, 18-19=-3/920, 17-18=-40/869, 16-17=-44/66
WEBS 3-28=-171/219, 3-27=-905/537, 4-27=-251/406, 6-23=-242/1731, 9-21=-18/515, 14-17=0/1016, 7-22=-48/589, 7-23=-978/234, 8-22=0/270, 8-21=-384/57, 11-19=-231/211, 12-19=-147/201, 12-18=-195/3, 9-20=-213/117, 11-20=0/432, 10-20=-292/116, 13-18=-57/114, 13-17=-401/78, 5-26=-386/650, 4-26=-411/309, 24-26=-626/227, 5-24=-638/369

**NOTES**
1) Unbalanced roof live loads have been considered for this design.
2) Wind: ASCE 7-22; Vult=130mph (3-second gust) Vasd=101mph; TCDL=6.0psf; BCDL=6.0psf; h=15ft; B=45ft; L=48ft; eave=6ft; Cat. II; Exp B; Enclosed; MWFRS (directional) and C-C Zone3 -1-6-0 to 3-3-10, Zone1 3-3-10 to 26-9-12, Zone2 26-9-12 to 33-7-4, Zone1 33-7-4 to 35-9-2, Zone2 35-9-2 to 42-6-9, Zone1 42-6-9 to 49-6-0 zone; cantilever left and right exposed ; end vertical left and right exposed; porch left exposed;C-C for members and forces & MWFRS for reactions shown; Lumber DOL=1.60 plate grip DOL=1.60
3) Building Designer / Project engineer responsible for verifying applied roof live load shown covers rain loading requirements specific to the use of this truss component.
4) Provide adequate drainage to prevent water ponding.
5) All plates are 3x5 MT20 unless otherwise indicated.
6) This truss has been designed for a 10.0 psf bottom chord live load nonconcurrent with any other live loads.
7) * This truss has been designed for a live load of 20.0psf on the bottom chord in all areas where a rectangle 3-06-00 tall by 2-00-00 wide will fit between the bottom chord and any other members, with BCDL = 10.0psf.
8) All bearings are assumed to be SP No.2 .
9) Provide mechanical connection (by others) of truss to bearing plate capable of withstanding 144 lb uplift at joint 2, 163 lb uplift at joint 25 and 25 lb uplift at joint 16.
10) This truss design requires that a minimum of 7/16" structural wood sheathing be applied directly to the top chord and 1/2" gypsum sheetrock be applied directly to the bottom chord.
11) Graphical purlin representation does not depict the size or the orientation of the purlin along the top and/or bottom chord.

**LOAD CASE(S)** Standard

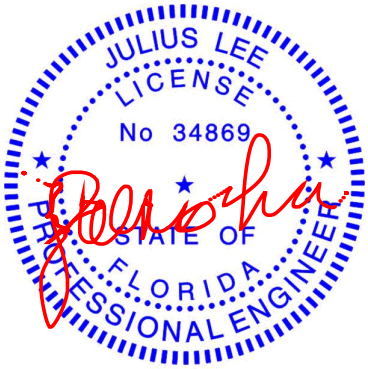


Julius Lee PE No. 34869
MiTek Inc. DBA MiTek USA FL Cert 6634
16023 Swingley Ridge Rd. Chesterfield, MO 63017
Date:

May 21,2024

WARNING - Verify design parameters and READ NOTES ON THIS AND INCLUDED MITEK REFERENCE PAGE MII-7473 rev. 1/2/2023 BEFORE USE.
Design valid for use only with MiTek® connectors. This design is based only upon parameters shown, and is for an individual building component, not a truss system. Before use, the building designer must verify the applicability of design parameters and properly incorporate this design into the overall building design. Bracing indicated is to prevent buckling of individual truss web and/or chord members only. Additional temporary and permanent bracing is always required for stability and to prevent collapse with possible personal injury and property damage. For general guidance regarding the fabrication, storage, delivery, erection and bracing of trusses and truss systems, see **ANSI/TPI1 Quality Criteria and DSB-22** available from Truss Plate Institute (www.tpinst.org) and **BCSI Building Component Safety Information** available from the Structural Building Component Association (www.sbcscomponents.com)

MiTek®
16023 Swingley Ridge Rd.
Chesterfield, MO 63017
314.434.1200 / MiTek-US.com

| Job | Truss | Truss Type | Qty | Ply | Shaw |
|---|---|---|---|---|---|
| 0524-036 | A06 | Piggyback Base | 6 | 1 | T33927002<br>Job Reference (optional) |



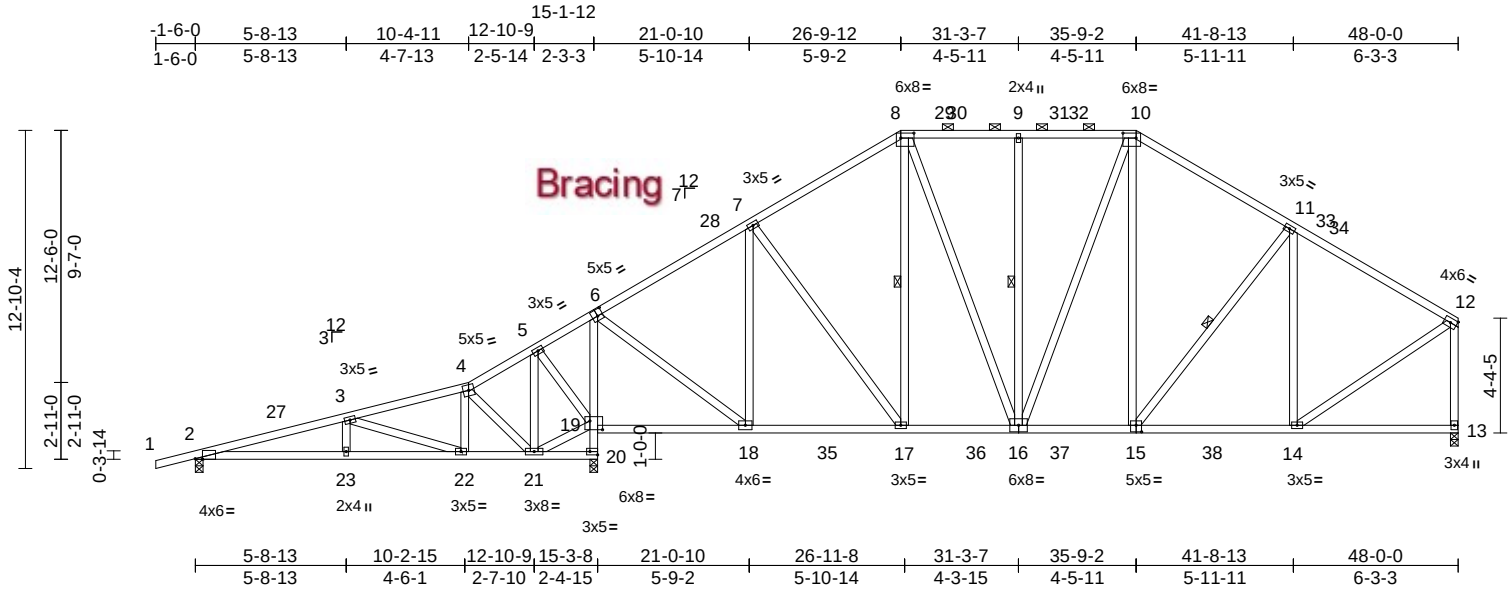


Scale = 1:87.6

Plate Offsets (X, Y): [2:0-3-4,Edge], [6:0-2-8,0-3-0], [8:0-6-0,0-2-4], [10:0-6-0,0-2-4], [15:0-2-8,0-3-0], [19:0-5-12,0-4-0], [20:Edge,0-1-8]

| Loading | (psf) | Spacing | 2-0-0 | CSI | | DEFL | in | (loc) | l/defl | L/d | PLATES | GRIP |
|---|---|---|---|---|---|---|---|---|---|---|---|---|
| TCLL (roof) | 20.0 | Plate Grip DOL | 1.25 | TC | 0.36 | Vert(LL) | -0.06 | 14-15 | >999 | 240 | MT20 | 244/190 |
| TCDL | 10.0 | Lumber DOL | 1.25 | BC | 0.52 | Vert(CT) | -0.06 | 23-26 | >999 | 180 | | |
| BCLL | 0.0* | Rep Stress Incr | YES | WB | 0.78 | Horz(CT) | 0.02 | 13 | n/a | n/a | | |
| BCDL | 10.0 | Code | FBC2023/TPI2014 | Matrix-AS | | | | | | | Weight: 352 lb | FT = 20% |

**LUMBER**
TOP CHORD 2x4 SP No.2
BOT CHORD 2x4 SP No.2
WEBS 2x4 SP No.2

**BRACING**
TOP CHORD Structural wood sheathing directly applied, except end verticals, and 2-0-0 oc purlins (5-9-12 max.): 8-10.
BOT CHORD Rigid ceiling directly applied.
WEBS 1 Row at midpt 8-17, 11-15, 9-16

**REACTIONS** (size) 2=0-3-8, 13=0-3-8, 20=0-3-8
Max Horiz 2=263 (LC 11)
Max Uplift 2=-34 (LC 12)
Max Grav 2=525 (LC 25), 13=1437 (LC 18), 20=2532 (LC 17)

**FORCES** (lb) - Maximum Compression/Maximum Tension
TOP CHORD 1-2=0/22, 2-3=-1027/94, 3-4=-211/105, 4-5=-95/493, 5-7=-860/921, 7-8=-1096/247, 8-9=-1007/261, 9-10=-1007/261, 10-11=-1223/256, 11-12=-1210/181, 12-13=-1343/222
BOT CHORD 2-23=-50/977, 22-23=-50/977, 21-22=-73/82, 20-21=-59/0, 19-20=-2493/175, 6-19=-2077/200, 18-19=-733/136, 17-18=-123/742, 14-17=-128/978, 13-14=-60/70
WEBS 3-23=0/216, 3-22=-917/70, 4-22=0/412, 6-18=-105/1664, 7-18=-734/141, 7-17=0/364, 8-17=-134/60, 10-16=-41/186, 10-15=-16/274, 11-15=-86/105, 11-14=-402/133, 12-14=-83/1103, 9-16=-280/104, 8-16=-65/375, 5-21=-61/629, 4-21=-516/47, 19-21=-378/113, 5-19=-615/84

**NOTES**
1) Unbalanced roof live loads have been considered for this design.
2) Wind: ASCE 7-22; Vult=130mph (3-second gust) Vasd=101mph; TCDL=6.0psf; BCDL=6.0psf; h=15ft; B=45ft; L=48ft; eave=6ft; Cat. II; Exp B; Enclosed; MWFRS (directional) and C-C Zone3 -1-6-0 to 3-3-10, Zone1 3-3-10 to 26-9-12, Zone2 26-9-12 to 33-7-4, Zone1 33-7-4 to 35-9-2, Zone2 35-9-2 to 42-6-9, Zone1 42-6-9 to 47-10-4 zone; cantilever left and right exposed ; end vertical left and right exposed;C-C for members and forces & MWFRS for reactions shown; Lumber DOL=1.60 plate grip DOL=1.60
3) Building Designer / Project engineer responsible for verifying applied roof live load shown covers rain loading requirements specific to the use of this truss component.
4) Provide adequate drainage to prevent water ponding.
5) All plates are 3x5 MT20 unless otherwise indicated.
6) This truss has been designed for a 10.0 psf bottom chord live load nonconcurrent with any other live loads.
7) * This truss has been designed for a live load of 20.0psf on the bottom chord in all areas where a rectangle 3-06-00 tall by 2-00-00 wide will fit between the bottom chord and any other members, with BCDL = 10.0psf.
8) All bearings are assumed to be SP No.2 .
9) Provide mechanical connection (by others) of truss to bearing plate capable of withstanding 34 lb uplift at joint 2.
10) This truss design requires that a minimum of 7/16" structural wood sheathing be applied directly to the top chord and 1/2" gypsum sheetrock be applied directly to the bottom chord.
11) Graphical purlin representation does not depict the size or the orientation of the purlin along the top and/or bottom chord.

**LOAD CASE(S)** Standard

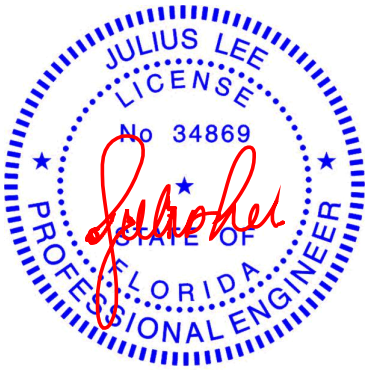


Julius Lee PE No. 34869
MiTek Inc. DBA MiTek USA FL Cert 6634
16023 Swingley Ridge Rd. Chesterfield, MO 63017
Date:

May 21,2024

**WARNING - Verify design parameters and READ NOTES ON THIS AND INCLUDED MITEK REFERENCE PAGE MII-7473 rev. 1/2/2023 BEFORE USE.**
Design valid for use only with MiTek® connectors. This design is based only upon parameters shown, and is for an individual building component, not a truss system. Before use, the building designer must verify the applicability of design parameters and properly incorporate this design into the overall building design. Bracing indicated is to prevent buckling of individual truss web and/or chord members only. Additional temporary and permanent bracing is always required for stability and to prevent collapse with possible personal injury and property damage. For general guidance regarding the fabrication, storage, delivery, erection and bracing of trusses and truss systems, see **ANSI/TPI1 Quality Criteria and DSB-22** available from Truss Plate Institute (www.tpinst.org) and **BCSI Building Component Safety Information** available from the Structural Building Component Association (www.sbcscomponents.com)

MiTek®
16023 Swingley Ridge Rd.
Chesterfield, MO 63017
314.434.1200 / MiTek-US.com

| Job | Truss | Truss Type | Qty | Ply | Shaw |
|---|---|---|---|---|---|
| 0524-036 | B01 | Piggyback Base Supported Gable | 2 | 1 | T33927003<br>Job Reference (optional) |



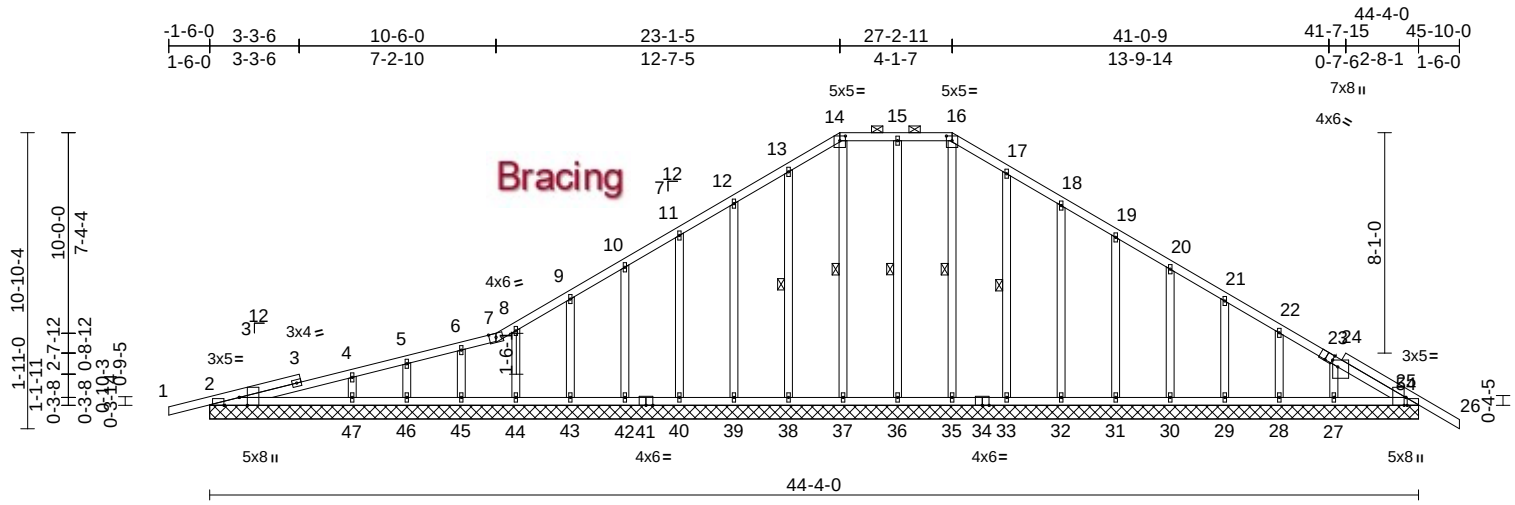


Scale = 1:84.5

Plate Offsets (X, Y): [2:0-3-8,Edge], [2:0-6-12,Edge], [14:0-2-8,0-2-1], [16:0-2-8,0-2-1], [23:0-3-0,Edge], [24:0-3-0,0-2-4], [25:0-3-8,Edge], [25:0-0-9,Edge]

| Loading | (psf) | Spacing | 2-0-0 | CSI | | DEFL | in | (loc) | l/defl | L/d | PLATES | GRIP |
|---|---|---|---|---|---|---|---|---|---|---|---|---|
| TCLL (roof) | 20.0 | Plate Grip DOL | 1.25 | TC | 0.24 | Vert(LL) | n/a | - | n/a | 999 | MT20 | 244/190 |
| TCDL | 10.0 | Lumber DOL | 1.25 | BC | 0.18 | Vert(CT) | n/a | - | n/a | 999 | | |
| BCLL | 0.0* | Rep Stress Incr | YES | WB | 0.12 | Horz(CT) | 0.01 | 51 | n/a | n/a | | |
| BCDL | 10.0 | Code | FBC2023/TPI2014 | Matrix-AS | | | | | | | Weight: 298 lb | FT = 20% |

**LUMBER**
TOP CHORD 2x4 SP No.2
BOT CHORD 2x4 SP No.2
OTHERS 2x4 SP No.2

**BRACING**
TOP CHORD Structural wood sheathing directly applied, except
2-0-0 oc purlins (6-0-0 max.): 14-16.
BOT CHORD Rigid ceiling directly applied.
WEBS 1 Row at midpt 16-35, 15-36, 14-37, 13-38, 17-33

**REACTIONS** (size) 2=44-4-0, 25=44-4-0, 27=44-4-0, 28=44-4-0, 29=44-4-0, 30=44-4-0, 31=44-4-0, 32=44-4-0, 33=44-4-0, 35=44-4-0, 36=44-4-0, 37=44-4-0, 38=44-4-0, 39=44-4-0, 40=44-4-0, 42=44-4-0, 43=44-4-0, 44=44-4-0, 45=44-4-0, 46=44-4-0, 47=44-4-0, 48=44-4-0, 51=44-4-0
Max Horiz 2=183 (LC 11), 48=183 (LC 11)
Max Uplift 2=-34 (LC 12), 25=-39 (LC 12), 28=-22 (LC 12), 29=-14 (LC 12), 30=-16 (LC 12), 31=-16 (LC 12), 32=-18 (LC 12), 33=-13 (LC 12), 38=-11 (LC 12), 39=-19 (LC 12), 40=-16 (LC 12), 42=-16 (LC 12), 43=-17 (LC 12), 44=-12 (LC 12), 46=-11 (LC 12), 48=-34 (LC 12), 51=-39 (LC 12)
Max Grav 2=281 (LC 23), 25=219 (LC 24), 27=196 (LC 18), 28=156 (LC 24), 29=162 (LC 18), 30=160 (LC 18), 31=161 (LC 18), 32=160 (LC 18), 33=164 (LC 18), 35=152 (LC 1), 36=175 (LC 23), 37=155 (LC 17), 38=161 (LC 17), 39=161 (LC 17), 40=161 (LC 17), 42=160 (LC 17), 43=166 (LC 17), 44=154 (LC 23), 45=188 (LC 23), 46=52 (LC 1), 47=392 (LC 23), 48=281 (LC 23), 51=219 (LC 24)

**FORCES** (lb) - Maximum Compression/Maximum Tension
TOP CHORD 1-2=0/22, 2-4=-121/128, 4-5=-120/112, 5-6=-109/116, 6-7=-112/113, 14-15=-111/347, 15-16=-111/347, 16-17=-123/372, 17-18=-101/307, 18-19=-79/237, 19-20=-57/170, 20-21=-37/102, 21-22=-46/48, 22-24=-61/58, 24-25=-102/65, 25-26=0/52, 7-8=-104/120, 8-9=-119/123, 9-10=-105/107, 10-11=-94/173, 11-12=-83/240, 12-13=-103/310, 13-14=-123/371
BOT CHORD 2-47=-65/194, 46-47=-65/194, 45-46=-65/194, 44-45=-65/194, 43-44=-65/194, 42-43=-65/194, 40-42=-65/194, 39-40=-65/194, 38-39=-65/194, 37-38=-65/194, 36-37=-65/193, 35-36=-65/193, 33-35=-65/193, 32-33=-65/193, 31-32=-65/193, 30-31=-65/193, 29-30=-65/193, 28-29=-65/193, 27-28=-65/193, 25-27=-56/182
WEBS 16-35=-112/0, 15-36=-135/56, 14-37=-115/0, 13-38=-121/99, 12-39=-121/115, 11-40=-121/109, 10-42=-120/110, 9-43=-125/112, 8-44=-117/98, 6-45=-134/84, 5-46=-63/67, 4-47=-252/127, 17-33=-124/104, 18-32=-120/114, 19-31=-121/109, 20-30=-121/111, 21-29=-121/110, 22-28=-121/113, 24-27=-143/108

**NOTES**
1) Unbalanced roof live loads have been considered for this design.
2) Wind: ASE 7-22; Vult=130mph (3-second gust) Vasd=101mph; TCDL=6.0psf; BCDL=6.0psf; h=15ft; B=45ft; L=44ft; eave=2ft; Cat. II; Exp B; Enclosed; MWFRS (directional) and C-C Zone3 zone; cantilever left and right exposed ; end vertical left and right exposed;C-C for members and forces & MWFRS for reactions shown; Lumber DOL=1.60 plate grip DOL=1.60

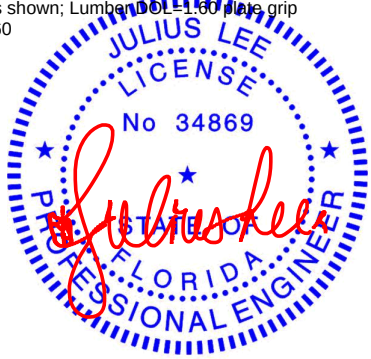


Julius Lee PE No. 34869
MiTek Inc. DBA MiTek USA FL Cert 6634
16023 Swingley Ridge Rd. Chesterfield, MO 63017
Date:

May 21,2024

Continued on page 2

WARNING - Verify design parameters and READ NOTES ON THIS AND INCLUDED MITEK REFERENCE PAGE MII-7473 rev. 1/2/2023 BEFORE USE.
Design valid for use only with MiTek® connectors. This design is based only upon parameters shown, and is for an individual building component, not a truss system. Before use, the building designer must verify the applicability of design parameters and properly incorporate this design into the overall building design. Bracing indicated is to prevent buckling of individual truss web and/or chord members only. Additional temporary and permanent bracing is always required for stability and to prevent collapse with possible personal injury and property damage. For general guidance regarding the fabrication, storage, delivery, erection and bracing of trusses and truss systems, see **ANSI/TPI1 Quality Criteria and DSB-22** available from Truss Plate Institute (www.tpinst.org) and **BCSI Building Component Safety Information** available from the Structural Building Component Association (www.sbcscomponents.com)

MiTek®
16023 Swingley Ridge Rd.
Chesterfield, MO 63017
314.434.1200 / MiTek-US.com

3) Truss designed for wind loads in the plane of the truss only. For studs exposed to wind (normal to the face), see Standard Industry Gable End Details as applicable, or consult qualified building designer as per ANSI/TPI 1.
4) Building Designer / Project engineer responsible for verifying applied roof live load shown covers rain loading requirements specific to the use of this truss component.
5) Provide adequate drainage to prevent water ponding.
6) All plates are 1.5x4 MT20 unless otherwise indicated.
7) Gable requires continuous bottom chord bearing.
8) Gable studs spaced at 2-0-0 oc.
9) This truss has been designed for a 10.0 psf bottom chord live load nonconcurrent with any other live loads.
10) * This truss has been designed for a live load of 20.0psf on the bottom chord in all areas where a rectangle 3-06-00 tall by 2-00-00 wide will fit between the bottom chord and any other members.
11) All bearings are assumed to be SP No.2 .
12) Provide mechanical connection (by others) of truss to bearing plate capable of withstanding 34 lb uplift at joint 2, 39 lb uplift at joint 25, 11 lb uplift at joint 38, 19 lb uplift at joint 39, 16 lb uplift at joint 40, 16 lb uplift at joint 42, 17 lb uplift at joint 43, 12 lb uplift at joint 44, 11 lb uplift at joint 46, 13 lb uplift at joint 33, 18 lb uplift at joint 32, 16 lb uplift at joint 31, 16 lb uplift at joint 30, 14 lb uplift at joint 29, 22 lb uplift at joint 28, 34 lb uplift at joint 2 and 39 lb uplift at joint 25.
13) This truss design requires that a minimum of 7/16" structural wood sheathing be applied directly to the top chord and 1/2" gypsum sheetrock be applied directly to the bottom chord.
14) Graphical purlin representation does not depict the size or the orientation of the purlin along the top and/or bottom chord.

**LOAD CASE(S)** Standard

**WARNING - Verify design parameters and READ NOTES ON THIS AND INCLUDED MITEK REFERENCE PAGE MII-7473 rev. 1/2/2023 BEFORE USE.**
Design valid for use only with MiTek® connectors. This design is based only upon parameters shown, and is for an individual building component, not a truss system. Before use, the building designer must verify the applicability of design parameters and properly incorporate this design into the overall building design. Bracing indicated is to prevent buckling of individual truss web and/or chord members only. Additional temporary and permanent bracing is always required for stability and to prevent collapse with possible personal injury and property damage. For general guidance regarding the fabrication, storage, delivery, erection and bracing of trusses and truss systems, see **ANSI/TPI1 Quality Criteria and DSB-22** available from Truss Plate Institute (www.tpinst.org) and **BCSI Building Component Safety Information** available from the Structural Building Component Association (www.sbcscomponents.com)

MiTek®
16023 Swingley Ridge Rd.
Chesterfield, MO 63017
314.434.1200 / MiTek-US.com

| Job | Truss | Truss Type | Qty | Ply | Shaw |
|---|---|---|---|---|---|
| 0524-036 | B02 | Piggyback Base | 4 | 1 | T33927004<br>Job Reference (optional) |



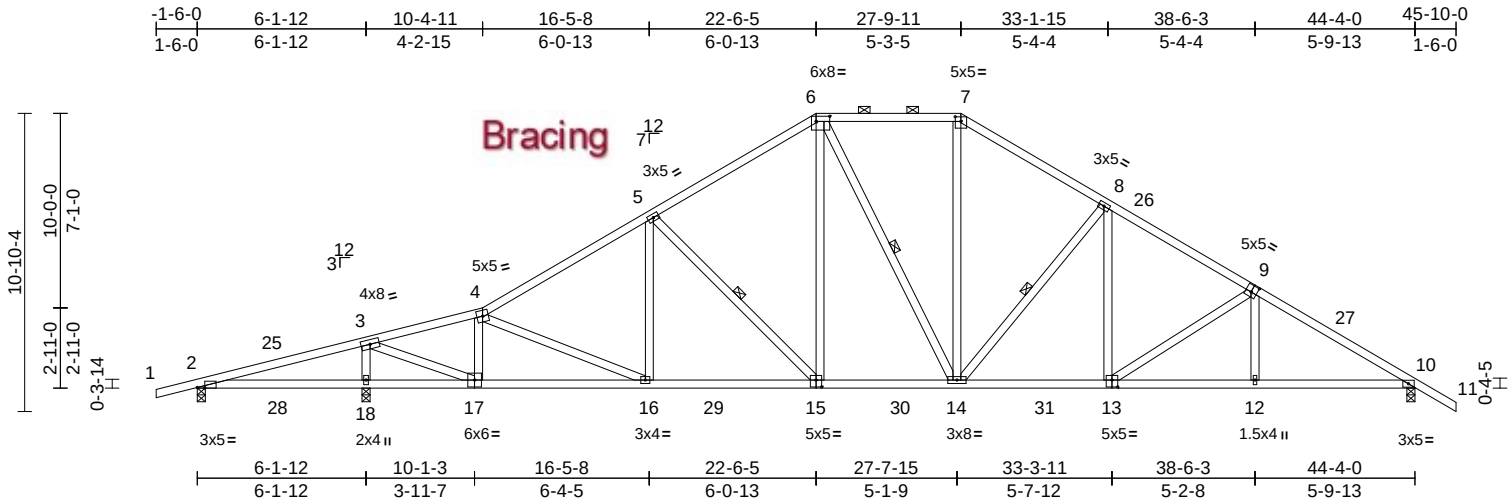


Scale = 1:83.9

Plate Offsets (X, Y): [2:0-3-4,Edge], [6:0-6-0,0-2-4], [7:0-2-8,0-2-1], [9:0-2-8,0-3-0], [13:0-2-8,0-3-0], [15:0-2-8,0-3-0]

| Loading | (psf) | Spacing | 2-0-0 | CSI | | DEFL | in | (loc) | l/defl | L/d | PLATES | GRIP |
|---|---|---|---|---|---|---|---|---|---|---|---|---|
| TCLL (roof) | 20.0 | Plate Grip DOL | 1.25 | TC | 0.57 | Vert(LL) | -0.16 | 13-14 | >999 | 240 | MT20 | 244/190 |
| TCDL | 10.0 | Lumber DOL | 1.25 | BC | 0.65 | Vert(CT) | -0.29 | 13-14 | >999 | 180 | | |
| BCLL | 0.0* | Rep Stress Incr | YES | WB | 0.67 | Horz(CT) | 0.09 | 10 | n/a | n/a | | |
| BCDL | 10.0 | Code | FBC2023/TPI2014 | Matrix-AS | | | | | | | Weight: 266 lb | FT = 20% |

**LUMBER**
TOP CHORD 2x4 SP No.2
BOT CHORD 2x4 SP No.2
WEBS 2x4 SP No.2

**BRACING**
TOP CHORD Structural wood sheathing directly applied, except
2-0-0 oc purlins (4-5-13 max.): 6-7.
BOT CHORD Rigid ceiling directly applied.
WEBS 1 Row at midpt 5-15, 6-14, 8-14

**REACTIONS** (size) 2=0-3-8, 10=0-3-8, 18=0-3-8
Max Horiz 2=183 (LC 11)
Max Uplift 2=-114 (LC 8), 10=-36 (LC 12), 18=-42 (LC 12)
Max Grav 2=77 (LC 23), 10=1775 (LC 18), 18=2374 (LC 17)

**FORCES** (lb) - Maximum Compression/Maximum Tension
TOP CHORD 1-2=0/22, 2-3=-18/1326, 3-4=-1738/140, 4-5=-2274/257, 5-6=-1893/319, 6-7=-1615/326, 7-8=-1919/326, 8-10=-2899/293, 10-11=0/45
BOT CHORD 2-18=-1176/88, 16-18=-1176/1864, 14-16=-39/2023, 12-14=-139/2430, 10-12=-138/2434
WEBS 4-17=-1003/139, 4-16=-12/210, 5-16=0/250, 5-15=-555/113, 6-15=-14/623, 6-14=-114/216, 7-14=-31/672, 8-14=-729/123, 8-13=0/505, 9-13=-511/73, 9-12=0/220, 3-18=-2174/189, 3-17=-108/3088

**NOTES**
1) Unbalanced roof live loads have been considered for this design.
2) Wind: ASCE 7-22; Vult=130mph (3-second gust) Vasd=101mph; TCDL=6.0psf; BCDL=6.0psf; h=15ft; B=45ft; L=44ft; eave=5ft; Cat. II; Exp B; Enclosed; MWFRS (directional) and C-C Zone3 -1-6-0 to 2-11-3, Zone1 2-11-3 to 22-6-5, Zone3 22-6-5 to 27-9-11, Zone2 27-9-11 to 34-0-14, Zone1 34-0-14 to 45-10-0 zone; cantilever left and right exposed ; end vertical left and right exposed; porch left exposed;C-C for members and forces & MWFRS for reactions shown; Lumber DOL=1.60 plate grip DOL=1.60
3) Building Designer / Project engineer responsible for verifying applied roof live load shown covers rain loading requirements specific to the use of this truss component.
4) Provide adequate drainage to prevent water ponding.
5) This truss has been designed for a 10.0 psf bottom chord live load nonconcurrent with any other live loads.
6) * This truss has been designed for a live load of 20.0psf on the bottom chord in all areas where a rectangle 3-06-00 tall by 2-00-00 wide will fit between the bottom chord and any other members, with BCDL = 10.0psf.
7) All bearings are assumed to be SP No.2 .
8) Provide mechanical connection (by others) of truss to bearing plate capable of withstanding 114 lb uplift at joint 2, 42 lb uplift at joint 18 and 36 lb uplift at joint 10.
9) This truss design requires that a minimum of 7/16" structural wood sheathing be applied directly to the top chord and 1/2" gypsum sheetrock be applied directly to the bottom chord.
10) Graphical purlin representation does not depict the size or the orientation of the purlin along the top and/or bottom chord.

**LOAD CASE(S)** Standard

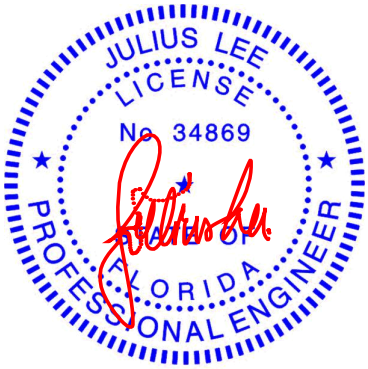


Julius Lee PE No. 34869
MiTek Inc. DBA MiTek USA FL Cert 6634
16023 Swingley Ridge Rd. Chesterfield, MO 63017
Date:

May 21,2024

**WARNING - Verify design parameters and READ NOTES ON THIS AND INCLUDED MITEK REFERENCE PAGE MII-7473 rev. 1/2/2023 BEFORE USE.**
Design valid for use only with MiTek® connectors. This design is based only upon parameters shown, and is for an individual building component, not a truss system. Before use, the building designer must verify the applicability of design parameters and properly incorporate this design into the overall building design. Bracing indicated is to prevent buckling of individual truss web and/or chord members only. Additional temporary and permanent bracing is always required for stability and to prevent collapse with possible personal injury and property damage. For general guidance regarding the fabrication, storage, delivery, erection and bracing of trusses and truss systems, see **ANSI/TPI1 Quality Criteria and DSB-22** available from Truss Plate Institute (www.tpinst.org) and **BCSI Building Component Safety Information** available from the Structural Building Component Association (www.sbcscomponents.com)

MiTek®
16023 Swingley Ridge Rd.
Chesterfield, MO 63017
314.434.1200 / MiTek-US.com

| Job | Truss | Truss Type | Qty | Ply | Shaw |
|---|---|---|---|---|---|
| 0524-036 | B03 | Piggyback Base | 4 | 1 | T33927005<br>Job Reference (optional) |



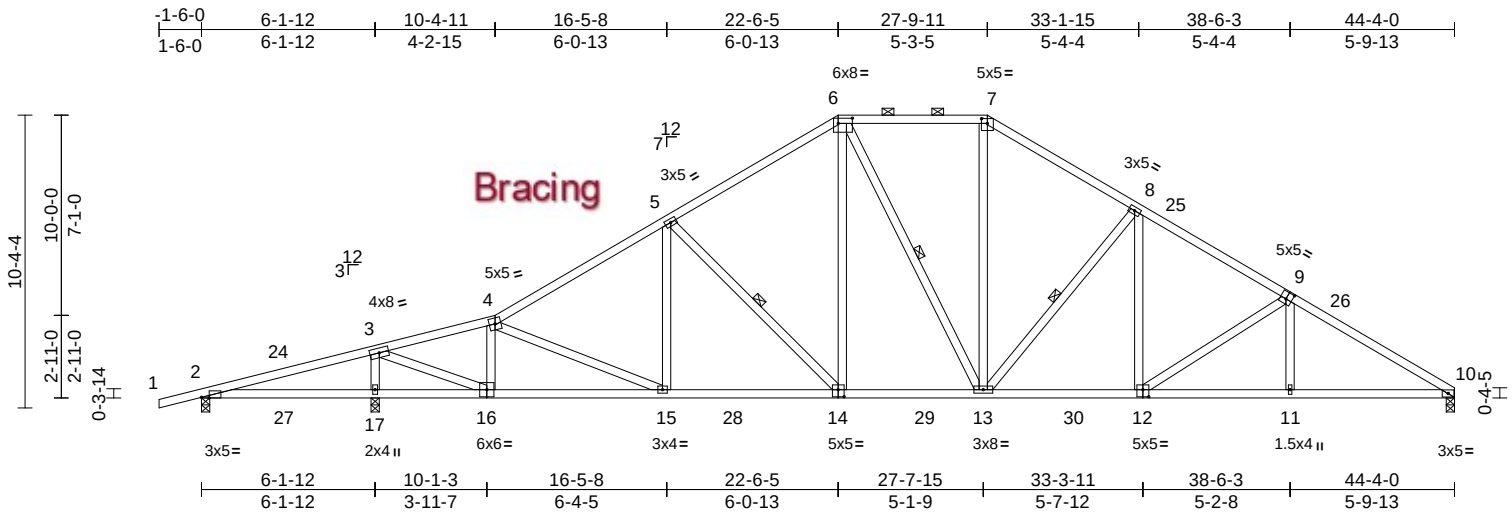


Scale = 1:81.5

Plate Offsets (X, Y): [2:0-3-4,Edge], [6:0-6-0,0-2-4], [7:0-2-8,0-2-1], [9:0-2-8,0-3-0], [12:0-2-8,0-3-0], [14:0-2-8,0-3-0]

| Loading | (psf) | Spacing | 2-0-0 | CSI | | DEFL | in | (loc) | l/defl | L/d | PLATES | GRIP |
|---|---|---|---|---|---|---|---|---|---|---|---|---|
| TCLL (roof) | 20.0 | Plate Grip DOL | 1.25 | TC | 0.57 | Vert(LL) | -0.16 | 12-13 | >999 | 240 | MT20 | 244/190 |
| TCDL | 10.0 | Lumber DOL | 1.25 | BC | 0.68 | Vert(CT) | -0.29 | 12-13 | >999 | 180 | | |
| BCLL | 0.0* | Rep Stress Incr | YES | WB | 0.67 | Horz(CT) | 0.09 | 10 | n/a | n/a | | |
| BCDL | 10.0 | Code | FBC2023/TPI2014 | Matrix-AS | | | | | | | Weight: 263 lb | FT = 20% |

**LUMBER**
TOP CHORD 2x4 SP No.2
BOT CHORD 2x4 SP No.2
WEBS 2x4 SP No.2

**BRACING**
TOP CHORD Structural wood sheathing directly applied, except
2-0-0 oc purlins (4-5-12 max.): 6-7.
BOT CHORD Rigid ceiling directly applied.
WEBS 1 Row at midpt 5-14, 6-13, 8-13

**REACTIONS** (size) 2=0-3-8, 10=0-3-8, 17=0-3-8
Max Horiz 2=178 (LC 11)
Max Uplift 2=-112 (LC 8), 17=-50 (LC 12)
Max Grav 2=76 (LC 23), 10=1692 (LC 18), 17=2373 (LC 17)

**FORCES** (lb) - Maximum Compression/Maximum Tension
TOP CHORD 1-2=0/22, 2-3=-46/1321, 3-4=-1738/134, 4-5=-2277/255, 5-6=-1896/319, 6-7=-1619/326, 7-8=-1922/326, 8-10=-2904/294
BOT CHORD 2-17=-1177/83, 15-17=-1177/1860, 13-15=-55/2017, 11-13=-161/2453, 10-11=-160/2457
WEBS 4-16=-1003/141, 4-15=-18/210, 5-15=0/250, 5-14=-555/109, 6-14=-11/623, 6-13=-113/218, 7-13=-37/673, 8-13=-733/124, 8-12=-4/512, 9-12=-528/136, 9-11=0/223, 3-17=-2174/193, 3-16=-114/3087

**NOTES**
1) Unbalanced roof live loads have been considered for this design.
2) Wind: ASCE 7-22; Vult=130mph (3-second gust) Vasd=101mph; TCDL=6.0psf; BCDL=6.0psf; h=15ft; B=45ft; L=44ft; eave=5ft; Cat. II; Exp B; Enclosed; MWFRS (directional) and C-C Zone3 -1-6-0 to 2-11-3, Zone1 2-11-3 to 22-6-5, Zone3 22-6-5 to 27-9-11, Zone2 27-9-11 to 34-0-14, Zone1 34-0-14 to 44-4-0 zone; cantilever left and right exposed ; end vertical left and right exposed; porch left exposed;C-C for members and forces & MWFRS for reactions shown; Lumber DOL=1.60 plate grip DOL=1.60
3) Building Designer / Project engineer responsible for verifying applied roof live load shown covers rain loading requirements specific to the use of this truss component.
4) Provide adequate drainage to prevent water ponding.
5) This truss has been designed for a 10.0 psf bottom chord live load nonconcurrent with any other live loads.
6) * This truss has been designed for a live load of 20.0psf on the bottom chord in all areas where a rectangle 3-06-00 tall by 2-00-00 wide will fit between the bottom chord and any other members, with BCDL = 10.0psf.
7) All bearings are assumed to be SP No.2 .
8) Provide mechanical connection (by others) of truss to bearing plate capable of withstanding 112 lb uplift at joint 2 and 50 lb uplift at joint 17.
9) This truss design requires that a minimum of 7/16" structural wood sheathing be applied directly to the top chord and 1/2" gypsum sheetrock be applied directly to the bottom chord.
10) Graphical purlin representation does not depict the size or the orientation of the purlin along the top and/or bottom chord.

**LOAD CASE(S)** Standard

Julius Lee PE No. 34869
MiTek Inc. DBA MiTek USA FL Cert 6634
16023 Swingley Ridge Rd. Chesterfield, MO 63017
Date:

May 21,2024

**WARNING - Verify design parameters and READ NOTES ON THIS AND INCLUDED MITEK REFERENCE PAGE MII-7473 rev. 1/2/2023 BEFORE USE.**
Design valid for use only with MiTek® connectors. This design is based only upon parameters shown, and is for an individual building component, not a truss system. Before use, the building designer must verify the applicability of design parameters and properly incorporate this design into the overall building design. Bracing indicated is to prevent buckling of individual truss web and/or chord members only. Additional temporary and permanent bracing is always required for stability and to prevent collapse with possible personal injury and property damage. For general guidance regarding the fabrication, storage, delivery, erection and bracing of trusses and truss systems, see **ANSI/TPI1 Quality Criteria and DSB-22** available from Truss Plate Institute (www.tpinst.org) and **BCSI Building Component Safety Information** available from the Structural Building Component Association (www.sbcscomponents.com)

MiTek®
16023 Swingley Ridge Rd.
Chesterfield, MO 63017
314.434.1200 / MiTek-US.com

| Job | Truss | Truss Type | Qty | Ply | Shaw |
|---|---|---|---|---|---|
| 0524-036 | B04 | Piggyback Base | 1 | 1 | T33927006<br>Job Reference (optional) |



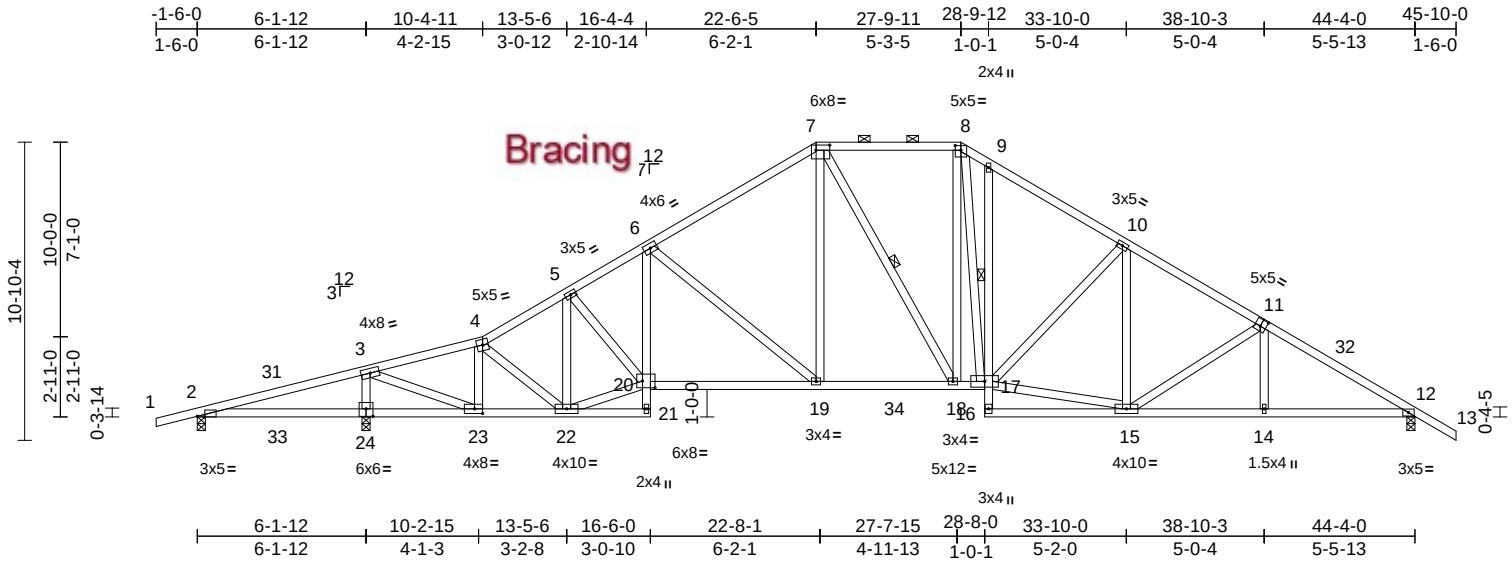


Scale = 1:83.9

Plate Offsets (X, Y): [2:0-3-4,Edge], [7:0-6-0,0-2-4], [8:0-2-8,0-2-1], [11:0-2-8,0-3-0], [20:0-5-8,0-3-0], [23:0-3-8,0-2-0], [24:0-3-0,0-3-4]

| Loading | (psf) | Spacing | 2-0-0 | CSI | | DEFL | in | (loc) | l/defl | L/d | PLATES | GRIP |
|---|---|---|---|---|---|---|---|---|---|---|---|---|
| TCLL (roof) | 20.0 | Plate Grip DOL | 1.25 | TC | 0.60 | Vert(LL) | -0.18 | 19-20 | >999 | 240 | MT20 | 244/190 |
| TCDL | 10.0 | Lumber DOL | 1.25 | BC | 0.65 | Vert(CT) | -0.34 | 19-20 | >999 | 180 | | |
| BCLL | 0.0* | Rep Stress Incr | YES | WB | 0.83 | Horz(CT) | 0.11 | 12 | n/a | n/a | | |
| BCDL | 10.0 | Code | FBC2023/TPI2014 | Matrix-AS | | | | | | | Weight: 302 lb | FT = 20% |

**LUMBER**
TOP CHORD 2x4 SP No.2
BOT CHORD 2x4 SP No.2
WEBS 2x4 SP No.2

**BRACING**
TOP CHORD Structural wood sheathing directly applied, except
2-0-0 oc purlins (4-4-2 max.): 7-8.
BOT CHORD Rigid ceiling directly applied. Except:
1 Row at midpt 9-17
WEBS 1 Row at midpt 7-18

**REACTIONS** (size) 2=0-3-8, 12=0-3-8, 24=0-3-8
Max Horiz 2=183 (LC 11)
Max Uplift 2=-119 (LC 8), 12=-36 (LC 12), 24=-40 (LC 12)
Max Grav 2=55 (LC 23), 12=1734 (LC 18), 24=2358 (LC 17)

**FORCES** (lb) - Maximum Compression/Maximum Tension
TOP CHORD 1-2=0/22, 2-3=-27/1390, 3-4=-1659/135, 4-5=-2148/227, 5-6=-2566/272, 6-7=-2018/313, 7-8=-1728/326, 8-9=-2085/379, 9-10=-2142/326, 10-12=-2835/285, 12-13=0/45
BOT CHORD 2-23=-1232/94, 22-23=-15/1724, 21-22=-30/65, 20-21=0/56, 6-20=0/465, 19-20=-43/2327, 18-19=0/1765, 17-18=-25/1746, 16-17=0/103, 9-17=-150/97, 15-16=0/234, 14-15=-136/2377, 12-14=-135/2381
WEBS 4-23=-1017/125, 6-19=-735/121, 7-19=0/688, 3-24=-2137/197, 3-23=-109/3047, 5-20=0/529, 5-22=-769/54, 4-22=-36/303, 20-22=-20/2016, 8-18=0/326, 7-18=-123/216, 8-17=-133/668, 10-17=-369/84, 10-15=-19/140, 11-15=-473/70, 15-17=-106/1787, 11-14=0/204

**NOTES**

1) Unbalanced roof live loads have been considered for this design.
2) Wind: ASCE 7-22; Vult=130mph (3-second gust) Vasd=101mph; TCDL=6.0psf; BCDL=6.0psf; h=15ft; B=45ft; L=44ft; eave=5ft; Cat. II; Exp B; Enclosed; MWFRS (directional) and C-C Zone3 -1-6-0 to 2-11-3, Zone1 2-11-3 to 22-6-5, Zone3 22-6-5 to 27-9-11, Zone2 27-9-11 to 33-10-0, Zone1 33-10-0 to 45-10-0 zone; cantilever left and right exposed ; end vertical left and right exposed; porch left exposed;C-C for members and forces & MWFRS for reactions shown; Lumber DOL=1.60 plate grip DOL=1.60
3) Building Designer / Project engineer responsible for verifying applied roof live load shown covers rain loading requirements specific to the use of this truss component.
4) Provide adequate drainage to prevent water ponding.
5) This truss has been designed for a 10.0 psf bottom chord live load nonconcurrent with any other live loads.
6) * This truss has been designed for a live load of 20.0psf on the bottom chord in all areas where a rectangle 3-06-00 tall by 2-00-00 wide will fit between the bottom chord and any other members, with BCDL = 10.0psf.
7) All bearings are assumed to be SP No.2 .
8) Provide mechanical connection (by others) of truss to bearing plate capable of withstanding 119 lb uplift at joint 2, 36 lb uplift at joint 12 and 40 lb uplift at joint 24.
9) This truss design requires that a minimum of 7/16" structural wood sheathing be applied directly to the top chord and 1/2" gypsum sheetrock be applied directly to the bottom chord.
10) Graphical purlin representation does not depict the size or the orientation of the purlin along the top and/or bottom chord.

**LOAD CASE(S)** Standard

Julius Lee PE No. 34869
MiTek Inc. DBA MiTek USA FL Cert 6634
16023 Swingley Ridge Rd. Chesterfield, MO 63017
Date:

May 21,2024

**WARNING - Verify design parameters and READ NOTES ON THIS AND INCLUDED MITEK REFERENCE PAGE MII-7473 rev. 1/2/2023 BEFORE USE.**
Design valid for use only with MiTek® connectors. This design is based only upon parameters shown, and is for an individual building component, not a truss system. Before use, the building designer must verify the applicability of design parameters and properly incorporate this design into the overall building design. Bracing indicated is to prevent buckling of individual truss web and/or chord members only. Additional temporary and permanent bracing is always required for stability and to prevent collapse with possible personal injury and property damage. For general guidance regarding the fabrication, storage, delivery, erection and bracing of trusses and truss systems, see **ANSI/TPI1 Quality Criteria and DSB-22** available from Truss Plate Institute (www.tpinst.org) and **BCSI Building Component Safety Information** available from the Structural Building Component Association (www.sbcscomponents.com)

MiTek®
16023 Swingley Ridge Rd.
Chesterfield, MO 63017
314.434.1200 / MiTek-US.com

| Job | Truss | Truss Type | Qty | Ply | Shaw |
|---|---|---|---|---|---|
| 0524-036 | B05 | Piggyback Base | 3 | 1 | T33927007<br>Job Reference (optional) |



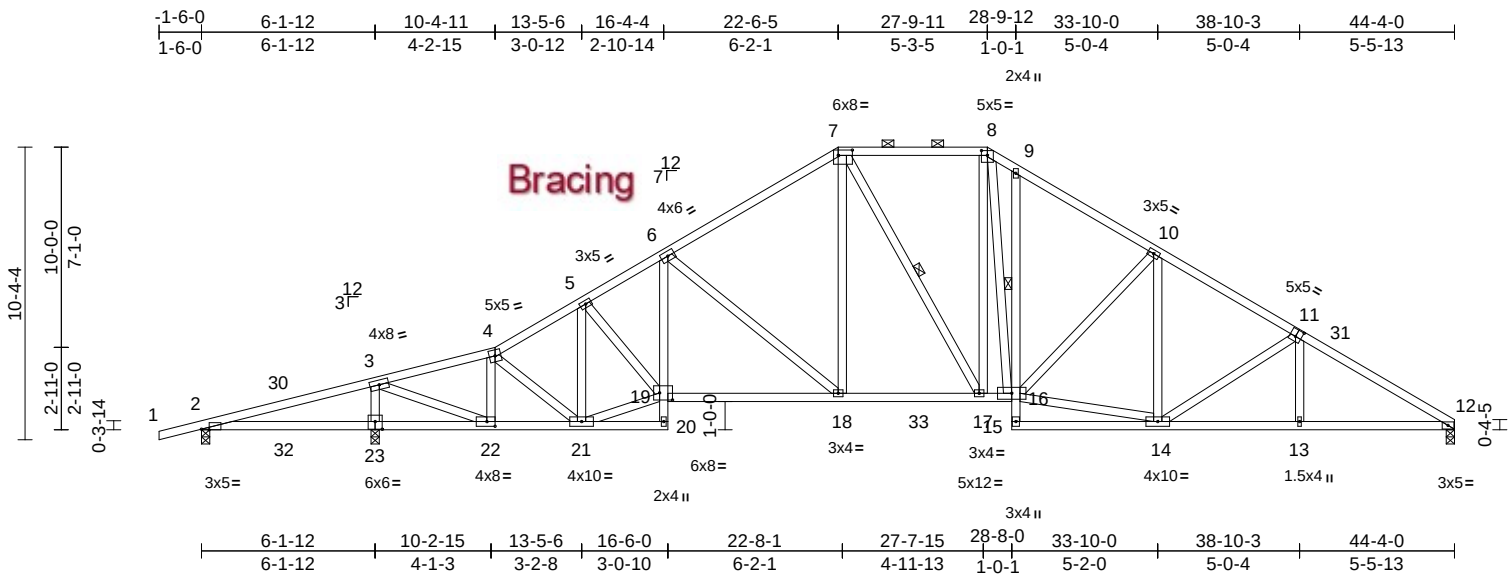


Scale = 1:81.5

Plate Offsets (X, Y): [2:0-3-4,Edge], [7:0-6-0,0-2-4], [8:0-2-8,0-2-1], [11:0-2-8,0-3-0], [19:0-5-8,0-3-0], [22:0-3-8,0-2-0], [23:0-3-0,0-3-4]

| Loading | (psf) | Spacing | 2-0-0 | CSI | | DEFL | in | (loc) | l/defl | L/d | PLATES | GRIP |
|---|---|---|---|---|---|---|---|---|---|---|---|---|
| TCLL (roof) | 20.0 | Plate Grip DOL | 1.25 | TC | 0.60 | Vert(LL) | -0.18 | 18-19 | >999 | 240 | MT20 | 244/190 |
| TCDL | 10.0 | Lumber DOL | 1.25 | BC | 0.65 | Vert(CT) | -0.34 | 18-19 | >999 | 180 | | |
| BCLL | 0.0* | Rep Stress Incr | YES | WB | 0.83 | Horz(CT) | 0.11 | 12 | n/a | n/a | | |
| BCDL | 10.0 | Code | FBC2023/TPI2014 | Matrix-AS | | | | | | | Weight: 299 lb | FT = 20% |

**LUMBER**
TOP CHORD 2x4 SP No.2
BOT CHORD 2x4 SP No.2
WEBS 2x4 SP No.2

**BRACING**
TOP CHORD Structural wood sheathing directly applied, except
2-0-0 oc purlins (4-4-1 max.): 7-8.
BOT CHORD Rigid ceiling directly applied. Except:
1 Row at midpt 9-16
WEBS 1 Row at midpt 7-17

**REACTIONS** (size) 2=0-3-8, 12=0-3-8, 23=0-3-8
Max Horiz 2=178 (LC 11)
Max Uplift 2=-117 (LC 8), 23=-48 (LC 12)
Max Grav 2=55 (LC 23), 12=1651 (LC 18), 23=2358 (LC 17)

**FORCES** (lb) - Maximum Compression/Maximum Tension
TOP CHORD 1-2=0/22, 2-3=-55/1385, 3-4=-1659/128, 4-5=-2152/223, 5-6=-2568/273, 6-7=-2020/314, 7-8=-1732/328, 8-9=-2091/381, 9-10=-2147/329, 10-12=-2843/286
BOT CHORD 2-22=-1233/90, 21-22=-30/1720, 20-21=-31/65, 19-20=0/56, 6-19=0/465, 18-19=-67/2320, 17-18=-16/1758, 16-17=-45/1740, 15-16=0/103, 9-16=-151/97, 14-15=0/235, 13-14=-159/2402, 12-13=-157/2406
WEBS 4-22=-1017/128, 6-18=-735/121, 7-18=0/688, 3-23=-2137/201, 3-22=-116/3047, 5-19=-14/526, 5-21=-766/62, 4-21=-41/301, 19-21=-35/2011, 8-17=0/326, 7-17=-122/218, 8-16=-135/672, 10-16=-372/82, 10-14=-17/142, 11-14=-491/136, 14-16=-123/1792, 11-13=0/208

**NOTES**

1) Unbalanced roof live loads have been considered for this design.
2) Wind: ASCE 7-22; Vult=130mph (3-second gust) Vasd=101mph; TCDL=6.0psf; BCDL=6.0psf; h=15ft; B=45ft; L=44ft; eave=5ft; Cat. II; Exp B; Enclosed; MWFRS (directional) and C-C Zone3 -1-6-0 to 2-11-3, Zone1 2-11-3 to 22-6-5, Zone3 22-6-5 to 27-9-11, Zone2 27-9-11 to 33-10-0, Zone1 33-10-0 to 44-4-0 zone; cantilever left and right exposed ; end vertical left and right exposed; porch left exposed;C-C for members and forces & MWFRS for reactions shown; Lumber DOL=1.60 plate grip DOL=1.60
3) Building Designer / Project engineer responsible for verifying applied roof live load shown covers rain loading requirements specific to the use of this truss component.
4) Provide adequate drainage to prevent water ponding.
5) This truss has been designed for a 10.0 psf bottom chord live load nonconcurrent with any other live loads.
6) * This truss has been designed for a live load of 20.0psf on the bottom chord in all areas where a rectangle 3-06-00 tall by 2-00-00 wide will fit between the bottom chord and any other members, with BCDL = 10.0psf.
7) All bearings are assumed to be SP No.2 .
8) Provide mechanical connection (by others) of truss to bearing plate capable of withstanding 117 lb uplift at joint 2 and 48 lb uplift at joint 23.
9) This truss design requires that a minimum of 7/16" structural wood sheathing be applied directly to the top chord and 1/2" gypsum sheetrock be applied directly to the bottom chord.
10) Graphical purlin representation does not depict the size or the orientation of the purlin along the top and/or bottom chord.

**LOAD CASE(S)** Standard

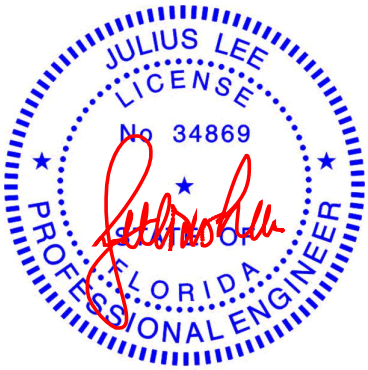


Julius Lee PE No. 34869
MiTek Inc. DBA MiTek USA FL Cert 6634
16023 Swingley Ridge Rd. Chesterfield, MO 63017
Date:

May 21,2024

**WARNING - Verify design parameters and READ NOTES ON THIS AND INCLUDED MITEK REFERENCE PAGE MII-7473 rev. 1/2/2023 BEFORE USE.**
Design valid for use only with MiTek® connectors. This design is based only upon parameters shown, and is for an individual building component, not a truss system. Before use, the building designer must verify the applicability of design parameters and properly incorporate this design into the overall building design. Bracing indicated is to prevent buckling of individual truss web and/or chord members only. Additional temporary and permanent bracing is always required for stability and to prevent collapse with possible personal injury and property damage. For general guidance regarding the fabrication, storage, delivery, erection and bracing of trusses and truss systems, see **ANSI/TPI1 Quality Criteria and DSB-22** available from Truss Plate Institute (www.tpinst.org) and **BCSI Building Component Safety Information** available from the Structural Building Component Association (www.sbcscomponents.com)

MiTek®
16023 Swingley Ridge Rd.
Chesterfield, MO 63017
314.434.1200 / MiTek-US.com

| Job | Truss | Truss Type | Qty | Ply | Shaw |
|---|---|---|---|---|---|
| 0524-036 | CJ01 | Diagonal Hip Girder | 2 | 1 | T33927008<br>Job Reference (optional) |



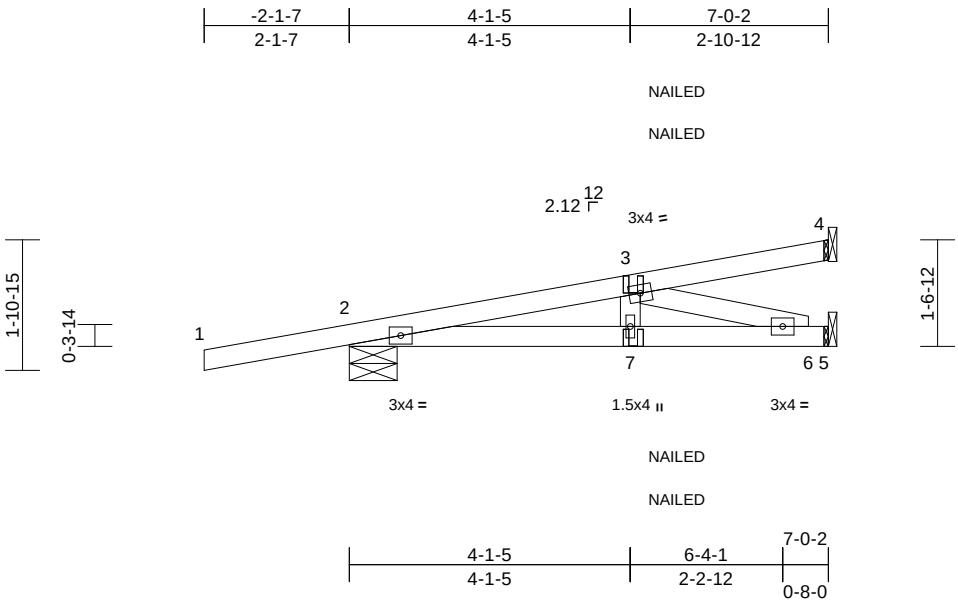


Scale = 1:33.7

| Loading | (psf) | Spacing | 2-0-0 | CSI | | DEFL | in | (loc) | l/defl | L/d | PLATES | GRIP |
|---|---|---|---|---|---|---|---|---|---|---|---|---|
| TCLL (roof) | 20.0 | Plate Grip DOL | 1.25 | TC | 0.33 | Vert(LL) | -0.01 | 7-10 | >999 | 240 | MT20 | 244/190 |
| TCDL | 10.0 | Lumber DOL | 1.25 | BC | 0.25 | Vert(CT) | -0.03 | 7-10 | >999 | 180 | | |
| BCLL | 0.0* | Rep Stress Incr | NO | WB | 0.11 | Horz(CT) | 0.01 | 5 | n/a | n/a | | |
| BCDL | 10.0 | Code | FBC2023/TPI2014 | Matrix-MP | | | | | | | Weight: 29 lb | FT = 20% |

**LUMBER**

TOP CHORD 2x4 SP No.2
BOT CHORD 2x4 SP No.2
WEBS 2x4 SP No.2

**BRACING**

TOP CHORD Structural wood sheathing directly applied or 6-0-0 oc purlins.
BOT CHORD Rigid ceiling directly applied or 10-0-0 oc bracing.

**REACTIONS** (size) 2=0-8-6, 4= Mechanical, 5= Mechanical
Max Horiz 2=58 (LC 4)
Max Uplift 2=-101 (LC 4), 4=-29 (LC 4), 5=-5 (LC 4)
Max Grav 2=431 (LC 1), 4=74 (LC 1), 5=197 (LC 13)

**FORCES** (lb) - Maximum Compression/Maximum Tension
TOP CHORD 1-2=0/22, 2-3=-658/42, 3-4=-17/10
BOT CHORD 2-7=-65/648, 6-7=-65/648, 5-6=0/0
WEBS 3-7=0/155, 3-6=-674/68

**NOTES**

1) Wind: ASCE 7-22; Vult=130mph (3-second gust) Vasd=101mph; TCDL=6.0psf; BCDL=6.0psf; h=15ft; B=45ft; L=24ft; eave=4ft; Cat. II; Exp B; Partially Enclosed; MWFRS (directional); cantilever left and right exposed ; end vertical left and right exposed; Lumber DOL=1.60 plate grip DOL=1.60
2) Building Designer / Project engineer responsible for verifying applied roof live load shown covers rain loading requirements specific to the use of this truss component.
3) This truss has been designed for a 10.0 psf bottom chord live load nonconcurrent with any other live loads.
4) * This truss has been designed for a live load of 20.0psf on the bottom chord in all areas where a rectangle 3-06-00 tall by 2-00-00 wide will fit between the bottom chord and any other members.
5) Bearings are assumed to be: , Joint 2 SP No.2 .
6) Refer to girder(s) for truss to truss connections.
7) Provide mechanical connection (by others) of truss to bearing plate capable of withstanding 29 lb uplift at joint 4, 101 lb uplift at joint 2 and 5 lb uplift at joint 5.
8) "NAILED" indicates 3-10d (0.148"x3") or 2-12d (0.148"x3.25") toe-nails per NDS guidlines.
9) In the LOAD CASE(S) section, loads applied to the face of the truss are noted as front (F) or back (B).

**LOAD CASE(S)** Standard

1) Dead + Roof Live (balanced): Lumber Increase=1.25, Plate Increase=1.25
   Uniform Loads (lb/ft)
   Vert: 1-4=-60, 5-8=-20
   Concentrated Loads (lb)
   Vert: 7=-15 (F=-7, B=-7)

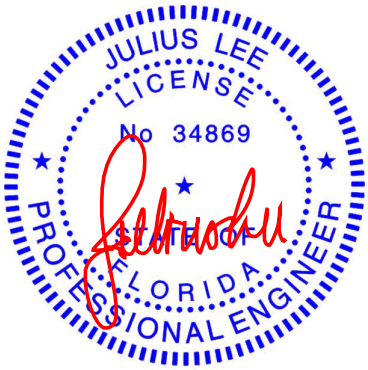


Julius Lee PE No. 34869
MiTek Inc. DBA MiTek USA FL Cert 6634
16023 Swingley Ridge Rd. Chesterfield, MO 63017
Date:

May 21,2024

**WARNING - Verify design parameters and READ NOTES ON THIS AND INCLUDED MITEK REFERENCE PAGE MII-7473 rev. 1/2/2023 BEFORE USE.**
Design valid for use only with MiTek® connectors. This design is based only upon parameters shown, and is for an individual building component, not a truss system. Before use, the building designer must verify the applicability of design parameters and properly incorporate this design into the overall building design. Bracing indicated is to prevent buckling of individual truss web and/or chord members only. Additional temporary and permanent bracing is always required for stability and to prevent collapse with possible personal injury and property damage. For general guidance regarding the fabrication, storage, delivery, erection and bracing of trusses and truss systems, see **ANSI/TPI1 Quality Criteria and DSB-22** available from Truss Plate Institute (www.tpinst.org) and **BCSI Building Component Safety Information** available from the Structural Building Component Association (www.sbcscomponents.com)

MiTek®
16023 Swingley Ridge Rd.
Chesterfield, MO 63017
314.434.1200 / MiTek-US.com

| Job | Truss | Truss Type | Qty | Ply | Shaw |
|---|---|---|---|---|---|
| 0524-036 | J01 | Jack-Open | 6 | 1 | T33927009<br>Job Reference (optional) |



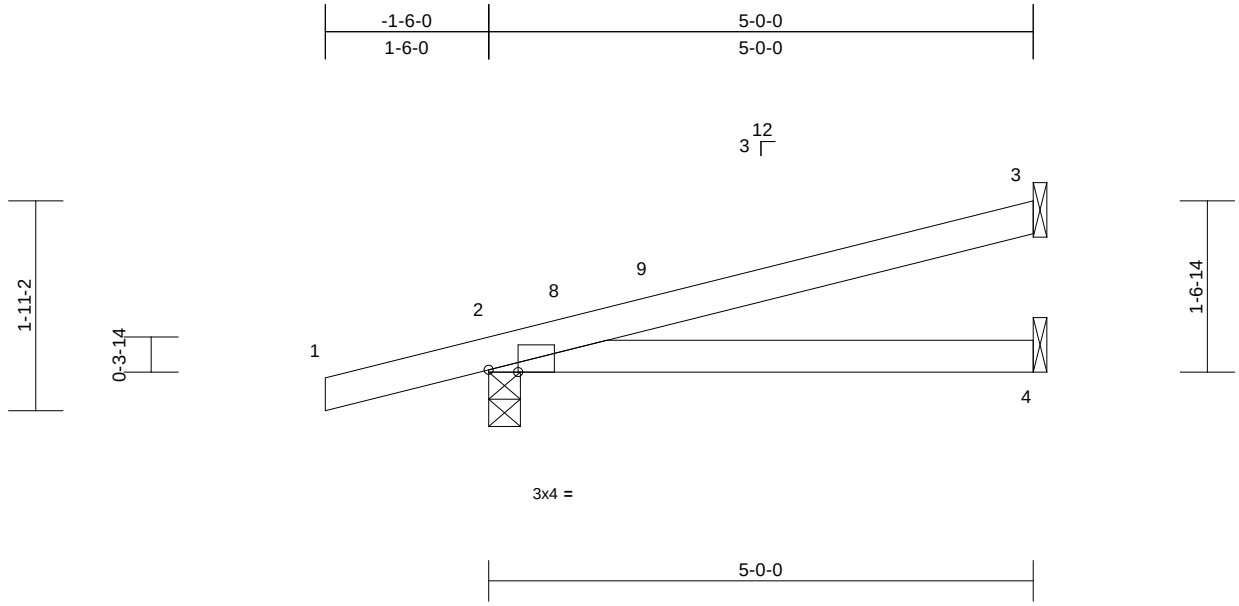


Scale = 1:21.2

Plate Offsets (X, Y): [2:0-3-4,Edge]

| Loading | (psf) | Spacing | 2-0-0 | CSI | | DEFL | in | (loc) | l/defl | L/d | PLATES | GRIP |
|---|---|---|---|---|---|---|---|---|---|---|---|---|
| TCLL (roof) | 20.0 | Plate Grip DOL | 1.25 | TC | 0.27 | Vert(LL) | 0.03 | 4-7 | >999 | 240 | MT20 | 244/190 |
| TCDL | 10.0 | Lumber DOL | 1.25 | BC | 0.22 | Vert(CT) | -0.05 | 4-7 | >999 | 180 | | |
| BCLL | 0.0* | Rep Stress Incr | YES | WB | 0.00 | Horz(CT) | 0.00 | 2 | n/a | n/a | | |
| BCDL | 10.0 | Code | FBC2023/TPI2014 | Matrix-AS | | | | | | | Weight: 18 lb | FT = 20% |

**LUMBER**
TOP CHORD 2x4 SP No.2
BOT CHORD 2x4 SP No.2

**BRACING**
TOP CHORD Structural wood sheathing directly applied.
BOT CHORD Rigid ceiling directly applied.

**REACTIONS** (size) 2=0-3-8, 3= Mechanical, 4= Mechanical
Max Horiz 2=55 (LC 12)
Max Uplift 2=-60 (LC 12), 3=-37 (LC 12)
Max Grav 2=301 (LC 1), 3=123 (LC 1), 4=85 (LC 3)

**FORCES** (lb) - Maximum Compression/Maximum Tension
TOP CHORD 1-2=0/22, 2-3=-111/26
BOT CHORD 2-4=-59/119

**NOTES**
1) Wind: ASCE 7-22; Vult=130mph (3-second gust) Vasd=101mph; TCDL=6.0psf; BCDL=6.0psf; h=15ft; B=45ft; L=24ft; eave=4ft; Cat. II; Exp B; Partially Enclosed; MWFRS (directional) and C-C Zone3 -1-6-0 to 1-6-0, Zone1 1-6-0 to 4-11-4 zone; cantilever left and right exposed ; end vertical left and right exposed;C-C for members and forces & MWFRS for reactions shown; Lumber DOL=1.60 plate grip DOL=1.60
2) Building Designer / Project engineer responsible for verifying applied roof live load shown covers rain loading requirements specific to the use of this truss component.
3) This truss has been designed for a 10.0 psf bottom chord live load nonconcurrent with any other live loads.
4) * This truss has been designed for a live load of 20.0psf on the bottom chord in all areas where a rectangle 3-06-00 tall by 2-00-00 wide will fit between the bottom chord and any other members.
5) Bearings are assumed to be: , Joint 2 SP No.2 .
6) Refer to girder(s) for truss to truss connections.
7) Provide mechanical connection (by others) of truss to bearing plate capable of withstanding 37 lb uplift at joint 3 and 60 lb uplift at joint 2.
8) This truss design requires that a minimum of 7/16" structural wood sheathing be applied directly to the top chord and 1/2" gypsum sheetrock be applied directly to the bottom chord.

**LOAD CASE(S)** Standard

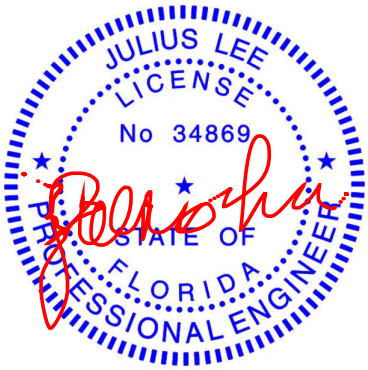


Julius Lee PE No. 34869
MiTek Inc. DBA MiTek USA FL Cert 6634
16023 Swingley Ridge Rd. Chesterfield, MO 63017
Date:

May 21,2024

**WARNING - Verify design parameters and READ NOTES ON THIS AND INCLUDED MITEK REFERENCE PAGE MII-7473 rev. 1/2/2023 BEFORE USE.**
Design valid for use only with MiTek® connectors. This design is based only upon parameters shown, and is for an individual building component, not a truss system. Before use, the building designer must verify the applicability of design parameters and properly incorporate this design into the overall building design. Bracing indicated is to prevent buckling of individual truss web and/or chord members only. Additional temporary and permanent bracing is always required for stability and to prevent collapse with possible personal injury and property damage. For general guidance regarding the fabrication, storage, delivery, erection and bracing of trusses and truss systems, see **ANSI/TPI1 Quality Criteria and DSB-22** available from Truss Plate Institute (www.tpinst.org) and **BCSI Building Component Safety Information** available from the Structural Building Component Association (www.sbcscomponents.com)

MiTek®
16023 Swingley Ridge Rd.
Chesterfield, MO 63017
314.434.1200 / MiTek-US.com

| Job | Truss | Truss Type | Qty | Ply | Shaw |
|---|---|---|---|---|---|
| 0524-036 | J02 | Jack-Open | 4 | 1 | T33927010<br>Job Reference (optional) |



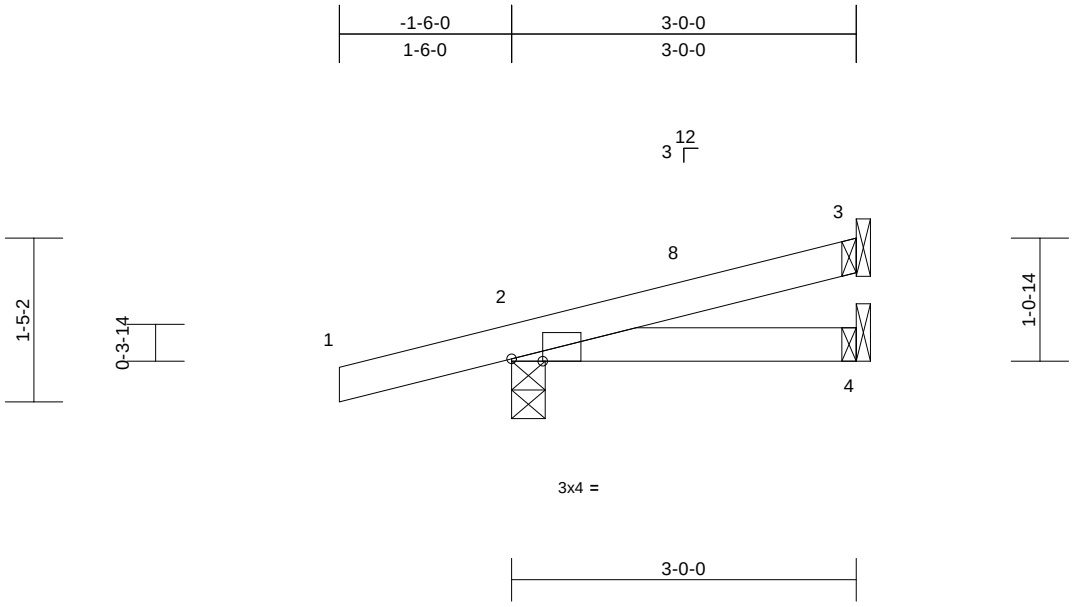


Scale = 1:20.1

Plate Offsets (X, Y): [2:0-3-4,Edge]

| Loading | (psf) | Spacing | 2-0-0 | CSI | | DEFL | in | (loc) | l/defl | L/d | PLATES | GRIP |
|---|---|---|---|---|---|---|---|---|---|---|---|---|
| TCLL (roof) | 20.0 | Plate Grip DOL | 1.25 | TC | 0.15 | Vert(LL) | 0.00 | 4-7 | >999 | 240 | MT20 | 244/190 |
| TCDL | 10.0 | Lumber DOL | 1.25 | BC | 0.07 | Vert(CT) | -0.01 | 4-7 | >999 | 180 | | |
| BCLL | 0.0* | Rep Stress Incr | YES | WB | 0.00 | Horz(CT) | 0.00 | 2 | n/a | n/a | | |
| BCDL | 10.0 | Code | FBC2023/TPI2014 | Matrix-MP | | | | | | | Weight: 11 lb | FT = 20% |

**LUMBER**
TOP CHORD 2x4 SP No.2
BOT CHORD 2x4 SP No.2

**BRACING**
TOP CHORD Structural wood sheathing directly applied or 3-0-0 oc purlins.
BOT CHORD Rigid ceiling directly applied or 10-0-0 oc bracing.

**REACTIONS** (size) 2=0-3-8, 3= Mechanical, 4= Mechanical
Max Horiz 2=38 (LC 12)
Max Uplift 2=-57 (LC 12), 3=-16 (LC 12)
Max Grav 2=230 (LC 1), 3=62 (LC 17), 4=48 (LC 3)

**FORCES** (lb) - Maximum Compression/Maximum Tension
TOP CHORD 1-2=0/22, 2-3=-61/15
BOT CHORD 2-4=-5/56

**NOTES**
1) Wind: ASCE 7-22; Vult=130mph (3-second gust) Vasd=101mph; TCDL=6.0psf; BCDL=6.0psf; h=15ft; B=45ft; L=24ft; eave=4ft; Cat. II; Exp B; Partially Enclosed; MWFRS (directional) and C-C Zone3 -1-6-0 to 1-6-0, Zone1 1-6-0 to 2-11-4 zone; cantilever left and right exposed ; end vertical left and right exposed;C-C for members and forces & MWFRS for reactions shown; Lumber DOL=1.60 plate grip DOL=1.60
2) Building Designer / Project engineer responsible for verifying applied roof live load shown covers rain loading requirements specific to the use of this truss component.
3) This truss has been designed for a 10.0 psf bottom chord live load nonconcurrent with any other live loads.
4) * This truss has been designed for a live load of 20.0psf on the bottom chord in all areas where a rectangle 3-06-00 tall by 2-00-00 wide will fit between the bottom chord and any other members.
5) Bearings are assumed to be: , Joint 2 SP No.2 .
6) Refer to girder(s) for truss to truss connections.
7) Provide mechanical connection (by others) of truss to bearing plate capable of withstanding 16 lb uplift at joint 3 and 57 lb uplift at joint 2.

**LOAD CASE(S)** Standard

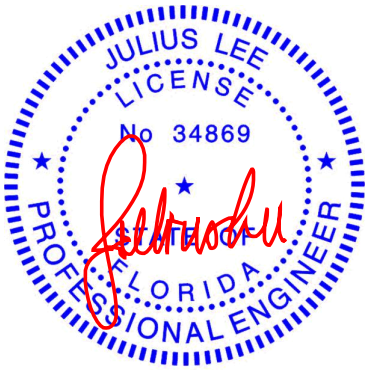


Julius Lee PE No. 34869
MiTek Inc. DBA MiTek USA FL Cert 6634
16023 Swingley Ridge Rd. Chesterfield, MO 63017
Date:

May 21,2024

**WARNING - Verify design parameters and READ NOTES ON THIS AND INCLUDED MITEK REFERENCE PAGE MII-7473 rev. 1/2/2023 BEFORE USE.**
Design valid for use only with MiTek® connectors. This design is based only upon parameters shown, and is for an individual building component, not a truss system. Before use, the building designer must verify the applicability of design parameters and properly incorporate this design into the overall building design. Bracing indicated is to prevent buckling of individual truss web and/or chord members only. Additional temporary and permanent bracing is always required for stability and to prevent collapse with possible personal injury and property damage. For general guidance regarding the fabrication, storage, delivery, erection and bracing of trusses and truss systems, see **ANSI/TPI1 Quality Criteria and DSB-22** available from Truss Plate Institute (www.tpinst.org) and **BCSI Building Component Safety Information** available from the Structural Building Component Association (www.sbcscomponents.com)

MiTek®
16023 Swingley Ridge Rd.
Chesterfield, MO 63017
314.434.1200 / MiTek-US.com

| Job | Truss | Truss Type | Qty | Ply | Shaw |
|---|---|---|---|---|---|
| 0524-036 | M01 | Monopitch | 9 | 1 | T33927011<br>Job Reference (optional) |



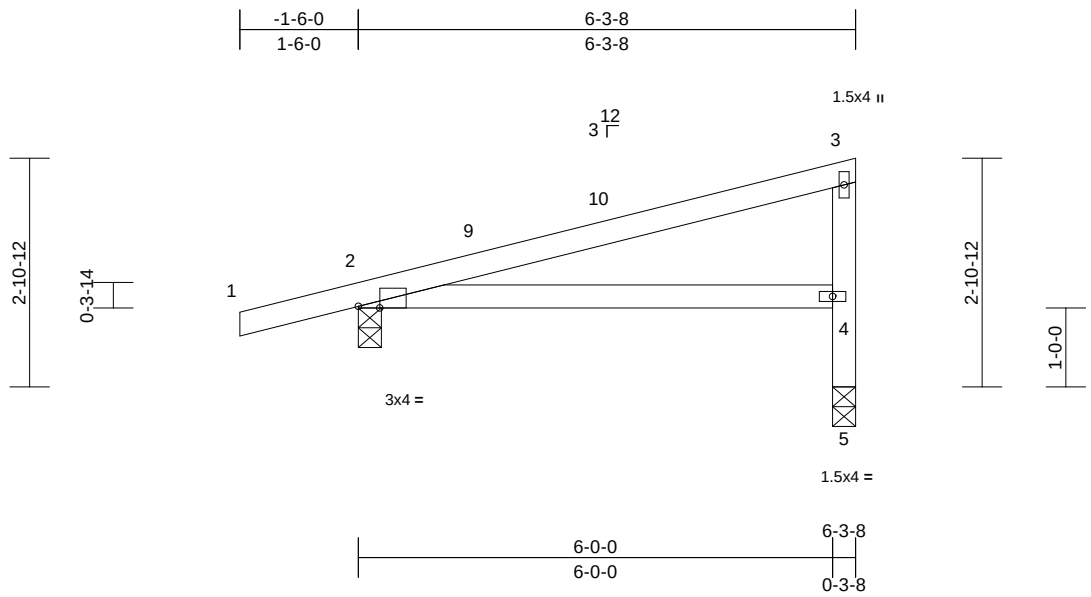


Scale = 1:29.2

Plate Offsets (X, Y): [2:0-3-4,Edge]

| Loading | (psf) | Spacing | 2-0-0 | CSI | | DEFL | in | (loc) | l/defl | L/d | PLATES | GRIP |
|---|---|---|---|---|---|---|---|---|---|---|---|---|
| TCLL (roof) | 20.0 | Plate Grip DOL | 1.25 | TC | 0.48 | Vert(LL) | 0.10 | 4-8 | >775 | 240 | MT20 | 244/190 |
| TCDL | 10.0 | Lumber DOL | 1.25 | BC | 0.39 | Vert(CT) | -0.14 | 4-8 | >532 | 180 | | |
| BCLL | 0.0* | Rep Stress Incr | YES | WB | 0.00 | Horz(CT) | 0.01 | 5 | n/a | n/a | | |
| BCDL | 10.0 | Code | FBC2023/TPI2014 | Matrix-MP | | | | | | | Weight: 25 lb | FT = 20% |

**LUMBER**
TOP CHORD 2x4 SP No.2
BOT CHORD 2x4 SP No.2
OTHERS 2x4 SP No.2

**BRACING**
TOP CHORD Structural wood sheathing directly applied or 6-0-0 oc purlins.
BOT CHORD Rigid ceiling directly applied or 10-0-0 oc bracing.

**REACTIONS** (size) 2=0-3-8, 5=0-3-8
Max Horiz 2=108 (LC 9)
Max Uplift 2=-61 (LC 8), 5=-38 (LC 12)
Max Grav 2=347 (LC 1), 5=237 (LC 17)

**FORCES** (lb) - Maximum Compression/Maximum Tension
TOP CHORD 1-2=0/22, 2-3=-150/70, 4-5=-237/233, 3-4=-158/224
BOT CHORD 2-4=-147/187

**NOTES**
1) Wind: ASCE 7-22; Vult=130mph (3-second gust) Vasd=101mph; TCDL=6.0psf; BCDL=6.0psf; h=15ft; B=45ft; L=24ft; eave=4ft; Cat. II; Exp B; Partially Enclosed; MWFRS (directional) and C-C Zone3 -1-6-0 to 1-6-0, Zone1 1-6-0 to 6-1-12 zone; cantilever left and right exposed ; end vertical left and right exposed;C-C for members and forces & MWFRS for reactions shown; Lumber DOL=1.60 plate grip DOL=1.60
2) Building Designer / Project engineer responsible for verifying applied roof live load shown covers rain loading requirements specific to the use of this truss component.
3) This truss has been designed for a 10.0 psf bottom chord live load nonconcurrent with any other live loads.
4) * This truss has been designed for a live load of 20.0psf on the bottom chord in all areas where a rectangle 3-06-00 tall by 2-00-00 wide will fit between the bottom chord and any other members.
5) All bearings are assumed to be SP No.2 .
6) Bearing at joint(s) 5 considers parallel to grain value using ANSI/TPI 1 angle to grain formula. Building designer should verify capacity of bearing surface.
7) Provide mechanical connection (by others) of truss to bearing plate capable of withstanding 61 lb uplift at joint 2 and 38 lb uplift at joint 5.

**LOAD CASE(S)** Standard

Julius Lee PE No. 34869
MiTek Inc. DBA MiTek USA FL Cert 6634
16023 Swingley Ridge Rd. Chesterfield, MO 63017
Date:

May 21,2024

**WARNING - Verify design parameters and READ NOTES ON THIS AND INCLUDED MITEK REFERENCE PAGE MII-7473 rev. 1/2/2023 BEFORE USE.**
Design valid for use only with MiTek® connectors. This design is based only upon parameters shown, and is for an individual building component, not a truss system. Before use, the building designer must verify the applicability of design parameters and properly incorporate this design into the overall building design. Bracing indicated is to prevent buckling of individual truss web and/or chord members only. Additional temporary and permanent bracing is always required for stability and to prevent collapse with possible personal injury and property damage. For general guidance regarding the fabrication, storage, delivery, erection and bracing of trusses and truss systems, see **ANSI/TPI1 Quality Criteria and DSB-22** available from Truss Plate Institute (www.tpinst.org) and **BCSI Building Component Safety Information** available from the Structural Building Component Association (www.sbcscomponents.com)

MiTek®
16023 Swingley Ridge Rd.
Chesterfield, MO 63017
314.434.1200 / MiTek-US.com

| Job | Truss | Truss Type | Qty | Ply | Shaw |
|---|---|---|---|---|---|
| 0524-036 | M02 | Monopitch | 9 | 1 | T33927012<br>Job Reference (optional) |



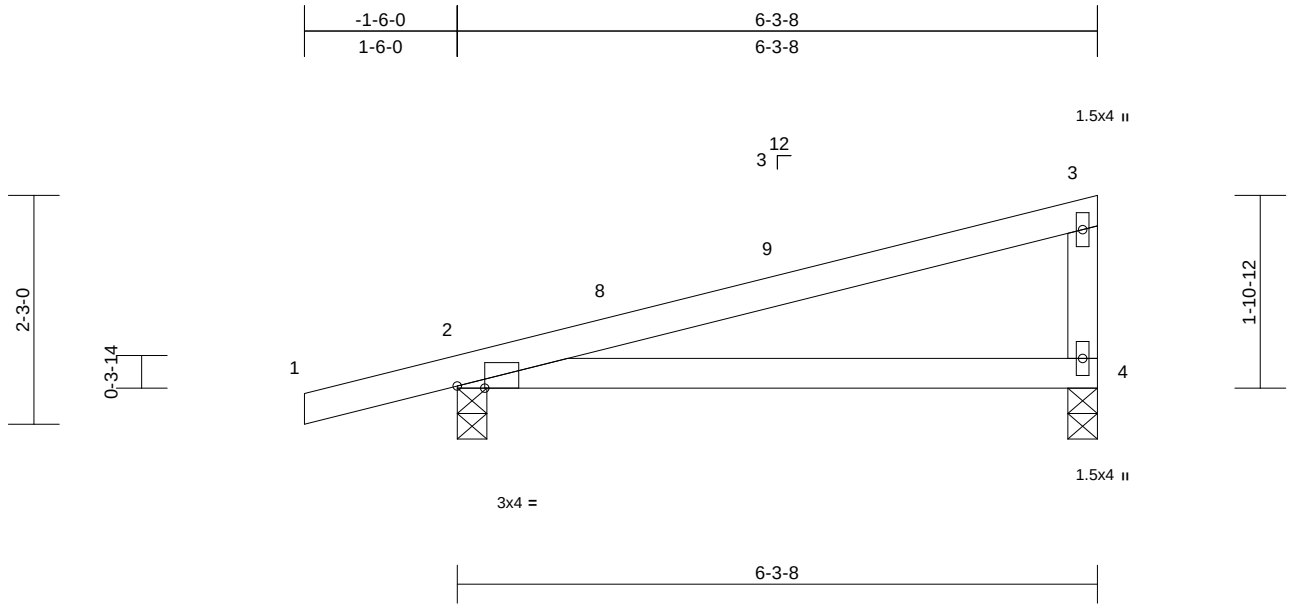


Scale = 1:22.6

Plate Offsets (X, Y): [2:0-3-4,Edge]

| Loading | (psf) | Spacing | 2-0-0 | CSI | | DEFL | in | (loc) | l/defl | L/d | PLATES | GRIP |
|---|---|---|---|---|---|---|---|---|---|---|---|---|
| TCLL (roof) | 20.0 | Plate Grip DOL | 1.25 | TC | 0.44 | Vert(LL) | 0.09 | 4-7 | >852 | 240 | MT20 | 244/190 |
| TCDL | 10.0 | Lumber DOL | 1.25 | BC | 0.36 | Vert(CT) | -0.13 | 4-7 | >577 | 180 | | |
| BCLL | 0.0* | Rep Stress Incr | YES | WB | 0.00 | Horz(CT) | 0.00 | 2 | n/a | n/a | | |
| BCDL | 10.0 | Code | FBC2023/TPI2014 | Matrix-AS | | | | | | | Weight: 23 lb | FT = 20% |

**LUMBER**
TOP CHORD 2x4 SP No.2
BOT CHORD 2x4 SP No.2
WEBS 2x4 SP No.2

**BRACING**
TOP CHORD Structural wood sheathing directly applied, except end verticals.
BOT CHORD Rigid ceiling directly applied.

**REACTIONS** (size) 2=0-3-8, 4=0-3-8
Max Horiz 2=49 (LC 11)
Max Uplift 2=-69 (LC 12), 4=-24 (LC 12)
Max Grav 2=347 (LC 1), 4=235 (LC 1)

**FORCES** (lb) - Maximum Compression/Maximum Tension
TOP CHORD 1-2=0/22, 2-3=-139/44, 3-4=-159/209
BOT CHORD 2-4=-89/161

**NOTES**
1) Wind: ASCE 7-22; Vult=130mph (3-second gust) Vasd=101mph; TCDL=6.0psf; BCDL=6.0psf; h=15ft; B=45ft; L=24ft; eave=4ft; Cat. II; Exp B; Partially Enclosed; MWFRS (directional) and C-C Zone3 -1-6-0 to 1-6-0, Zone1 1-6-0 to 6-1-12 zone; cantilever left and right exposed ; end vertical left and right exposed;C-C for members and forces & MWFRS for reactions shown; Lumber DOL=1.60 plate grip DOL=1.60
2) Building Designer / Project engineer responsible for verifying applied roof live load shown covers rain loading requirements specific to the use of this truss component.
3) This truss has been designed for a 10.0 psf bottom chord live load nonconcurrent with any other live loads.
4) * This truss has been designed for a live load of 20.0psf on the bottom chord in all areas where a rectangle 3-06-00 tall by 2-00-00 wide will fit between the bottom chord and any other members.
5) All bearings are assumed to be SP No.2 .
6) Provide mechanical connection (by others) of truss to bearing plate capable of withstanding 24 lb uplift at joint 4 and 69 lb uplift at joint 2.
7) This truss design requires that a minimum of 7/16" structural wood sheathing be applied directly to the top chord and 1/2" gypsum sheetrock be applied directly to the bottom chord.

**LOAD CASE(S)** Standard

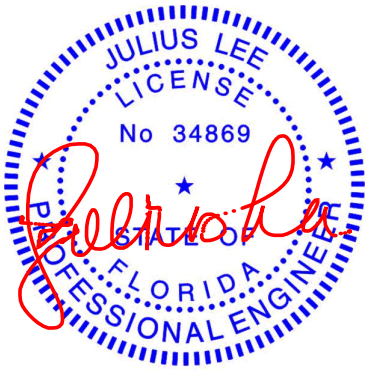


Julius Lee PE No. 34869
MiTek Inc. DBA MiTek USA FL Cert 6634
16023 Swingley Ridge Rd. Chesterfield, MO 63017
Date:

May 21,2024

**WARNING - Verify design parameters and READ NOTES ON THIS AND INCLUDED MITEK REFERENCE PAGE MII-7473 rev. 1/2/2023 BEFORE USE.**
Design valid for use only with MiTek® connectors. This design is based only upon parameters shown, and is for an individual building component, not a truss system. Before use, the building designer must verify the applicability of design parameters and properly incorporate this design into the overall building design. Bracing indicated is to prevent buckling of individual truss web and/or chord members only. Additional temporary and permanent bracing is always required for stability and to prevent collapse with possible personal injury and property damage. For general guidance regarding the fabrication, storage, delivery, erection and bracing of trusses and truss systems, see **ANSI/TPI1 Quality Criteria and DSB-22** available from Truss Plate Institute (www.tpinst.org) and **BCSI Building Component Safety Information** available from the Structural Building Component Association (www.sbcscomponents.com)

MiTek®
16023 Swingley Ridge Rd.
Chesterfield, MO 63017
314.434.1200 / MiTek-US.com

| Job | Truss | Truss Type | Qty | Ply | Shaw |
|---|---|---|---|---|---|
| 0524-036 | M03 | Half Hip Girder | 2 | 1 | T33927013<br>Job Reference (optional) |



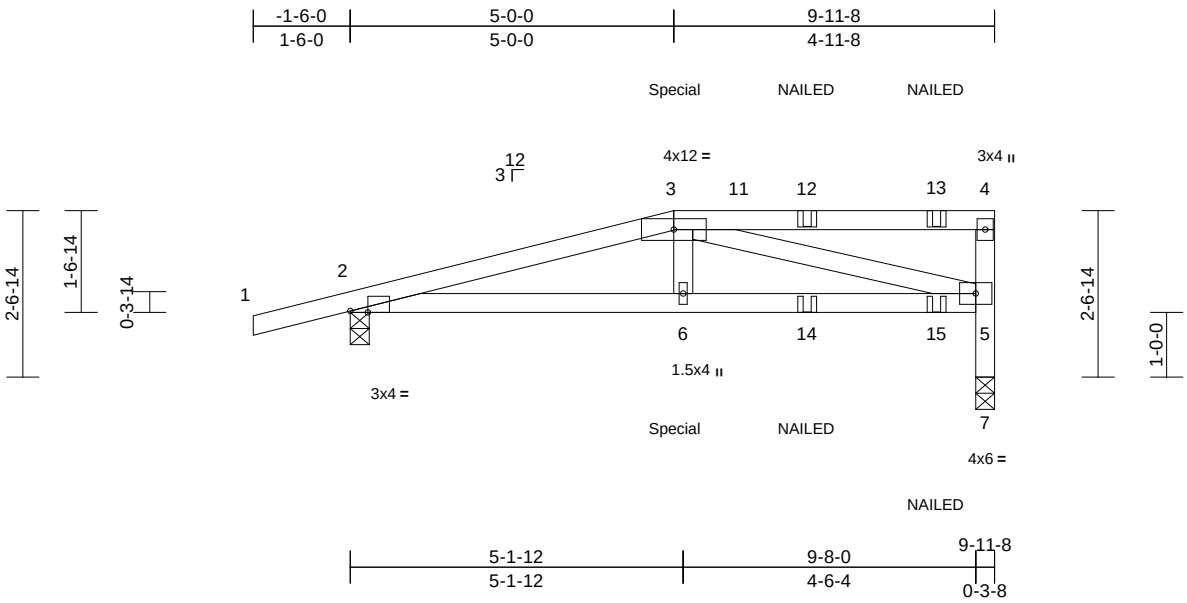


Scale = 1:35.6

Plate Offsets (X, Y): [2:0-3-4,Edge]

| Loading | (psf) | Spacing | 2-0-0 | CSI | | DEFL | in | (loc) | l/defl | L/d | PLATES | GRIP |
|---|---|---|---|---|---|---|---|---|---|---|---|---|
| TCLL (roof) | 20.0 | Plate Grip DOL | 1.25 | TC | 0.51 | Vert(LL) | -0.04 | 6-10 | >999 | 240 | MT20 | 244/190 |
| TCDL | 10.0 | Lumber DOL | 1.25 | BC | 0.52 | Vert(CT) | -0.09 | 6-10 | >999 | 180 | | |
| BCLL | 0.0* | Rep Stress Incr | NO | WB | 0.56 | Horz(CT) | 0.03 | 7 | n/a | n/a | | |
| BCDL | 10.0 | Code | FBC2023/TPI2014 | Matrix-MS | | | | | | | Weight: 43 lb | FT = 20% |

**LUMBER**
TOP CHORD 2x4 SP No.2
BOT CHORD 2x4 SP No.2
WEBS 2x4 SP No.2
OTHERS 2x4 SP No.2

**BRACING**
TOP CHORD Structural wood sheathing directly applied or 4-5-15 oc purlins.
BOT CHORD Rigid ceiling directly applied or 10-0-0 oc bracing.

**REACTIONS** (lb/size) 2=656/0-3-8, 7=705/0-3-8
Max Horiz 2=90 (LC 5)
Max Uplift 2=-94 (LC 8), 7=-61 (LC 5)
Max Grav 2=656 (LC 1), 7=707 (LC 13)

**FORCES** (lb) - Max. Comp./Max. Ten. - All forces 250 (lb) or less except when shown.
TOP CHORD 2-3=-1511/122, 5-7=-707/61
BOT CHORD 2-6=-158/1485, 6-14=-150/1525, 14-15=-150/1525, 5-15=-150/1525
WEBS 3-6=0/411, 3-5=-1412/111

**NOTES**
1) Unbalanced roof live loads have been considered for this design.
2) Wind: ASCE 7-22; Vult=130mph (3-second gust) Vasd=101mph; TCDL=6.0psf; BCDL=6.0psf; h=15ft; B=45ft; L=24ft; eave=4ft; Cat. II; Exp B; Partially Enclosed; MWFRS (directional); cantilever left and right exposed ; end vertical left and right exposed; Lumber DOL=1.60 plate grip DOL=1.60
3) Building Designer / Project engineer responsible for verifying applied roof live load shown covers rain loading requirements specific to the use of this truss component.
4) Provide adequate drainage to prevent water ponding.
5) This truss has been designed for a 10.0 psf bottom chord live load nonconcurrent with any other live loads.
6) * This truss has been designed for a live load of 20.0psf on the bottom chord in all areas where a rectangle 3-06-00 tall by 2-00-00 wide will fit between the bottom chord and any other members.
7) Bearing at joint(s) 7 considers parallel to grain value using ANSI/TPI 1 angle to grain formula. Building designer should verify capacity of bearing surface.
8) Provide mechanical connection (by others) of truss to bearing plate capable of withstanding 94 lb uplift at joint 2 and 61 lb uplift at joint 7.
9) "NAILED" indicates 3-10d (0.148"x3") or 3-12d (0.148"x3.25") toe-nails per NDS guidlines.
10) Hanger(s) or other connection device(s) shall be provided sufficient to support concentrated load(s) 102 lb down and 50 lb up at 5-0-0 on top chord, and 215 lb down and 6 lb up at 5-0-0 on bottom chord. The design/selection of such connection device(s) is the responsibility of others.
11) In the LOAD CASE(S) section, loads applied to the face of the truss are noted as front (F) or back (B).

**LOAD CASE(S)** Standard
1) Dead + Roof Live (balanced): Lumber Increase=1.25, Plate Increase=1.25
Uniform Loads (lb/ft)
Vert: 1-3=-60, 3-4=-60, 5-8=-20
Concentrated Loads (lb)
Vert: 6=-206 (F), 3=-63 (F), 12=-63 (F), 13=-70 (F), 14=-41 (F), 15=-44 (F)

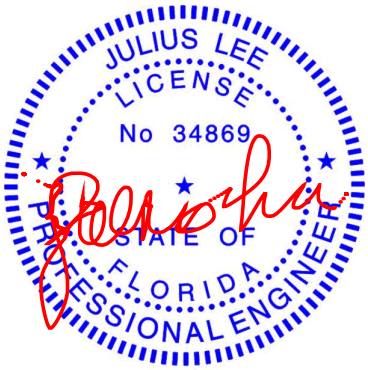


Julius Lee PE No. 34869
MiTek Inc. DBA MiTek USA FL Cert 6634
16023 Swingley Ridge Rd. Chesterfield, MO 63017
Date:

May 21,2024

WARNING - Verify design parameters and READ NOTES ON THIS AND INCLUDED MITEK REFERENCE PAGE MII-7473 rev. 1/2/2023 BEFORE USE.
Design valid for use only with MiTek® connectors. This design is based only upon parameters shown, and is for an individual building component, not a truss system. Before use, the building designer must verify the applicability of design parameters and properly incorporate this design into the overall building design. Bracing indicated is to prevent buckling of individual truss web and/or chord members only. Additional temporary and permanent bracing is always required for stability and to prevent collapse with possible personal injury and property damage. For general guidance regarding the fabrication, storage, delivery, erection and bracing of trusses and truss systems, see **ANSI/TPI1 Quality Criteria and DSB-22** available from Truss Plate Institute (www.tpinst.org) and **BCSI Building Component Safety Information** available from the Structural Building Component Association (www.sbcscomponents.com)

MiTek®
16023 Swingley Ridge Rd.
Chesterfield, MO 63017
314.434.1200 / MiTek-US.com

| Job | Truss | Truss Type | Qty | Ply | Shaw |
|---|---|---|---|---|---|
| 0524-036 | PB01 | Piggyback | 2 | 1 | T33927014<br>Job Reference (optional) |



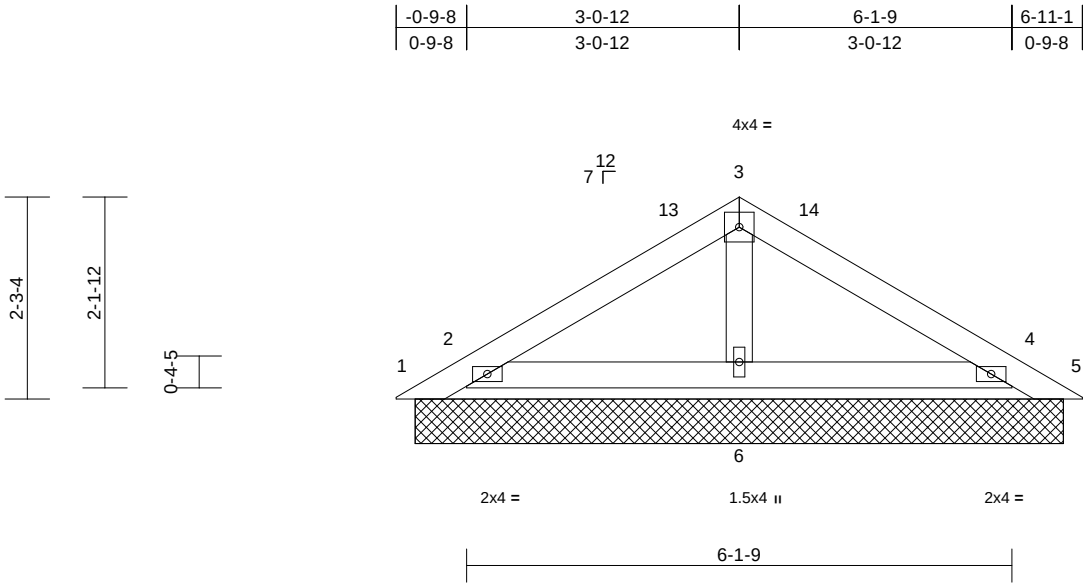


Scale = 1:25.9

| Loading | (psf) | Spacing | 2-0-0 | CSI | | DEFL | in | (loc) | l/defl | L/d | PLATES | GRIP |
|---|---|---|---|---|---|---|---|---|---|---|---|---|
| TCLL (roof) | 20.0 | Plate Grip DOL | 1.25 | TC | 0.14 | Vert(LL) | n/a | - | n/a | 999 | MT20 | 244/190 |
| TCDL | 10.0 | Lumber DOL | 1.25 | BC | 0.07 | Vert(TL) | n/a | - | n/a | 999 | | |
| BCLL | 0.0* | Rep Stress Incr | YES | WB | 0.01 | Horiz(TL) | 0.00 | 4 | n/a | n/a | | |
| BCDL | 10.0 | Code | FBC2023/TPI2014 | Matrix-AS | | | | | | | Weight: 25 lb | FT = 20% |

**LUMBER**
TOP CHORD 2x4 SP No.2
BOT CHORD 2x4 SP No.2
OTHERS 2x4 SP No.2

**BRACING**
TOP CHORD Structural wood sheathing directly applied.
BOT CHORD Rigid ceiling directly applied.

**REACTIONS** (size) 1=7-3-7, 2=7-3-7, 4=7-3-7, 5=7-3-7, 6=7-3-7, 7=7-3-7, 10=7-3-7

Max Horiz 1=36 (LC 11)
Max Uplift 1=-116 (LC 17), 2=-19 (LC 12), 4=-26 (LC 12), 5=-102 (LC 24), 7=-19 (LC 12), 10=-26 (LC 12)
Max Grav 1=15 (LC 12), 2=306 (LC 23), 4=293 (LC 24), 5=16 (LC 12), 6=190 (LC 1), 7=306 (LC 23), 10=293 (LC 24)

**FORCES** (lb) - Maximum Compression/Maximum Tension
TOP CHORD 1-2=-36/101, 2-3=-78/78, 3-4=-78/73, 4-5=-45/73
BOT CHORD 2-6=-38/47, 4-6=-39/48
WEBS 3-6=-101/35

**NOTES**
1) Unbalanced roof live loads have been considered for this design.
2) Wind: ASCE 7-22; Vult=130mph (3-second gust) Vasd=101mph; TCDL=6.0psf; BCDL=6.0psf; h=15ft; B=45ft; L=24ft; eave=4ft; Cat. II; Exp B; Enclosed; MWFRS (directional) and C-C Zone3 0-10-10 to 3-10-10, Zone1 3-10-10 to 4-5-11, Zone3 4-5-11 to 8-0-11 zone; cantilever left and right exposed ; end vertical left and right exposed;C-C for members and forces & MWFRS for reactions shown; Lumber DOL=1.60 plate grip DOL=1.60
3) Truss designed for wind loads in the plane of the truss only. For studs exposed to wind (normal to the face), see Standard Industry Gable End Details as applicable, or consult qualified building designer as per ANSI/TPI 1.
4) Building Designer / Project engineer responsible for verifying applied roof live load shown covers rain loading requirements specific to the use of this truss component.
5) Gable requires continuous bottom chord bearing.
6) Gable studs spaced at 2-0-0 oc.
7) This truss has been designed for a 10.0 psf bottom chord live load nonconcurrent with any other live loads.
8) * This truss has been designed for a live load of 20.0psf on the bottom chord in all areas where a rectangle 3-06-00 tall by 2-00-00 wide will fit between the bottom chord and any other members.
9) All bearings are assumed to be SP No.2 .
10) Provide mechanical connection (by others) of truss to bearing plate capable of withstanding 19 lb uplift at joint 2, 26 lb uplift at joint 4, 116 lb uplift at joint 1, 102 lb uplift at joint 5, 19 lb uplift at joint 2 and 26 lb uplift at joint 4.
11) This truss design requires that a minimum of 7/16" structural wood sheathing be applied directly to the top chord and 1/2" gypsum sheetrock be applied directly to the bottom chord.
12) See Standard Industry Piggyback Truss Connection Detail for Connection to base truss as applicable, or consult qualified building designer.

**LOAD CASE(S)** Standard

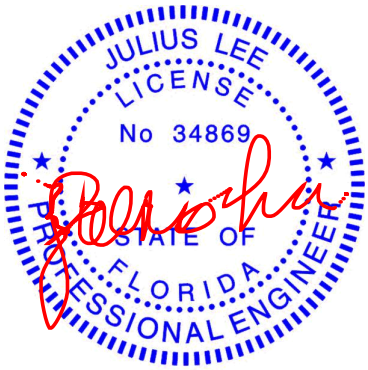


Julius Lee PE No. 34869
MiTek Inc. DBA MiTek USA FL Cert 6634
16023 Swingley Ridge Rd. Chesterfield, MO 63017
Date:

May 21,2024

**WARNING - Verify design parameters and READ NOTES ON THIS AND INCLUDED MITEK REFERENCE PAGE MII-7473 rev. 1/2/2023 BEFORE USE.**
Design valid for use only with MiTek® connectors. This design is based only upon parameters shown, and is for an individual building component, not a truss system. Before use, the building designer must verify the applicability of design parameters and properly incorporate this design into the overall building design. Bracing indicated is to prevent buckling of individual truss web and/or chord members only. Additional temporary and permanent bracing is always required for stability and to prevent collapse with possible personal injury and property damage. For general guidance regarding the fabrication, storage, delivery, erection and bracing of trusses and truss systems, see **ANSI/TPI1 Quality Criteria and DSB-22** available from Truss Plate Institute (www.tpinst.org) and **BCSI Building Component Safety Information** available from the Structural Building Component Association (www.sbcscomponents.com)

MiTek®
16023 Swingley Ridge Rd.
Chesterfield, MO 63017
314.434.1200 / MiTek-US.com

| Job | Truss | Truss Type | Qty | Ply | Shaw |
|---|---|---|---|---|---|
| 0524-036 | PB02 | Piggyback | 17 | 1 | T33927015<br>Job Reference (optional) |



| -0-9-15 | 3-7-12 | 7-3-7 | 8-1-6 |
|---|---|---|---|
| 0-9-15 | 3-7-12 | 3-7-12 | 0-9-15 |

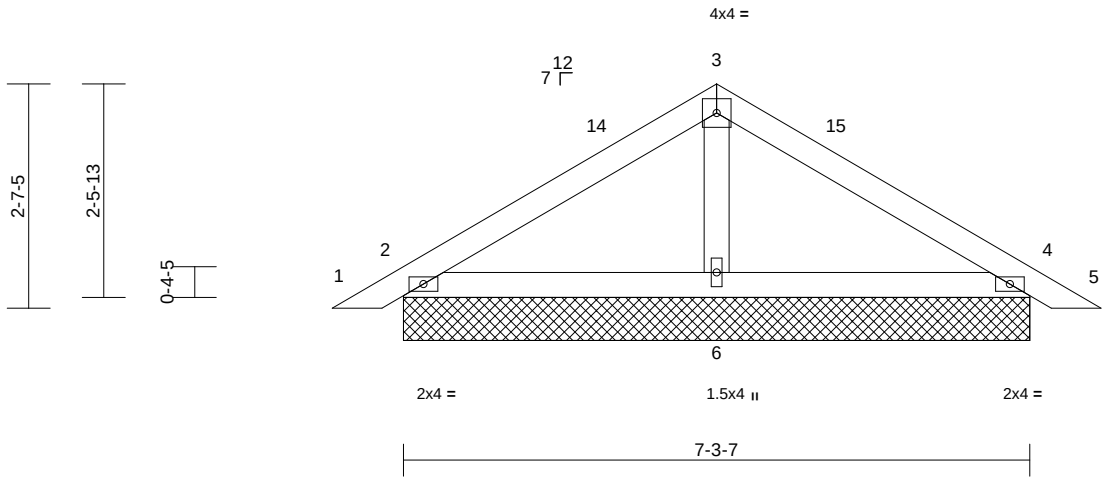


Scale = 1:26.8

| Loading | (psf) | Spacing | 2-0-0 | CSI | | DEFL | in | (loc) | l/defl | L/d | PLATES | GRIP |
|---|---|---|---|---|---|---|---|---|---|---|---|---|
| TCLL (roof) | 20.0 | Plate Grip DOL | 1.25 | TC | 0.14 | Vert(LL) | n/a | - | n/a | 999 | MT20 | 244/190 |
| TCDL | 10.0 | Lumber DOL | 1.25 | BC | 0.16 | Vert(CT) | n/a | - | n/a | 999 | | |
| BCLL | 0.0* | Rep Stress Incr | YES | WB | 0.01 | Horz(CT) | 0.00 | 11 | n/a | n/a | | |
| BCDL | 10.0 | Code | FBC2023/TPI2014 | Matrix-AS | | | | | | | Weight: 29 lb | FT = 20% |

**LUMBER**
TOP CHORD 2x4 SP No.2
BOT CHORD 2x4 SP No.2
OTHERS 2x4 SP No.2

**BRACING**
TOP CHORD Structural wood sheathing directly applied.
BOT CHORD Rigid ceiling directly applied.

**REACTIONS** (size) 2=7-3-7, 4=7-3-7, 6=7-3-7, 7=7-3-7, 11=7-3-7
Max Horiz 2=-42 (LC 10), 7=-42 (LC 10)
Max Uplift 2=-26 (LC 12), 4=-26 (LC 12), 7=-26 (LC 12), 11=-26 (LC 12)
Max Grav 2=194 (LC 1), 4=194 (LC 1), 6=260 (LC 1), 7=194 (LC 1), 11=194 (LC 1)

**FORCES** (lb) - Maximum Compression/Maximum Tension
TOP CHORD 1-2=0/16, 2-3=-111/98, 3-4=-111/88, 4-5=0/16
BOT CHORD 2-6=-7/55, 4-6=-16/55
WEBS 3-6=-118/34

**NOTES**
1) Unbalanced roof live loads have been considered for this design.
2) Wind: ASCE 7-22; Vult=130mph (3-second gust) Vasd=101mph; TCDL=6.0psf; BCDL=6.0psf; h=15ft; B=45ft; L=24ft; eave=4ft; Cat. II; Exp B; Enclosed; MWFRS (directional) and C-C Zone3 0-3-8 to 3-3-8, Zone1 3-3-8 to 4-5-11, Zone3 4-5-11 to 8-7-14 zone; cantilever left and right exposed ; end vertical left and right exposed;C-C for members and forces & MWFRS for reactions shown; Lumber DOL=1.60 plate grip DOL=1.60
3) Truss designed for wind loads in the plane of the truss only. For studs exposed to wind (normal to the face), see Standard Industry Gable End Details as applicable, or consult qualified building designer as per ANSI/TPI 1.
4) Building Designer / Project engineer responsible for verifying applied roof live load shown covers rain loading requirements specific to the use of this truss component.
5) Gable requires continuous bottom chord bearing.
6) Gable studs spaced at 4-0-0 oc.
7) This truss has been designed for a 10.0 psf bottom chord live load nonconcurrent with any other live loads.
8) * This truss has been designed for a live load of 20.0psf on the bottom chord in all areas where a rectangle 3-06-00 tall by 2-00-00 wide will fit between the bottom chord and any other members.
9) All bearings are assumed to be SP No.2 .
10) Provide mechanical connection (by others) of truss to bearing plate capable of withstanding 26 lb uplift at joint 2, 26 lb uplift at joint 4, 26 lb uplift at joint 2 and 26 lb uplift at joint 4.
11) This truss design requires that a minimum of 7/16" structural wood sheathing be applied directly to the top chord and 1/2" gypsum sheetrock be applied directly to the bottom chord.
12) See Standard Industry Piggyback Truss Connection Detail for Connection to base truss as applicable, or consult qualified building designer.

**LOAD CASE(S)** Standard

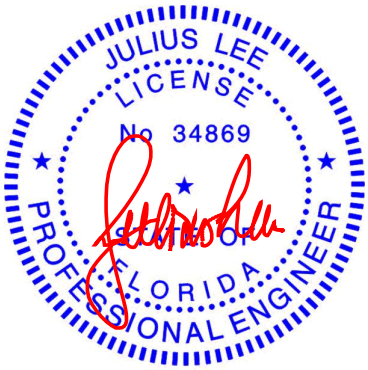


Julius Lee PE No. 34869
MiTek Inc. DBA MiTek USA FL Cert 6634
16023 Swingley Ridge Rd. Chesterfield, MO 63017
Date:

May 21,2024

**WARNING - Verify design parameters and READ NOTES ON THIS AND INCLUDED MITEK REFERENCE PAGE MII-7473 rev. 1/2/2023 BEFORE USE.**
Design valid for use only with MiTek® connectors. This design is based only upon parameters shown, and is for an individual building component, not a truss system. Before use, the building designer must verify the applicability of design parameters and properly incorporate this design into the overall building design. Bracing indicated is to prevent buckling of individual truss web and/or chord members only. Additional temporary and permanent bracing is always required for stability and to prevent collapse with possible personal injury and property damage. For general guidance regarding the fabrication, storage, delivery, erection and bracing of trusses and truss systems, see **ANSI/TPI1 Quality Criteria and DSB-22** available from Truss Plate Institute (www.tpinst.org) and **BCSI Building Component Safety Information** available from the Structural Building Component Association (www.sbcscomponents.com)

MiTek®
16023 Swingley Ridge Rd.
Chesterfield, MO 63017
314.434.1200 / MiTek-US.com

| Job | Truss | Truss Type | Qty | Ply | Shaw |
|---|---|---|---|---|---|
| 0524-036 | PB03 | Piggyback | 2 | 1 | T33927016<br>Job Reference (optional) |



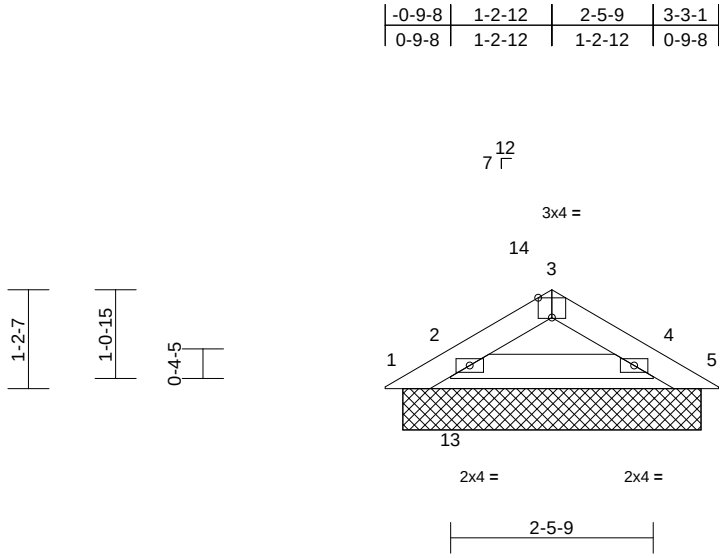


Scale = 1:28

Plate Offsets (X, Y): [3:0-2-0,Edge]

| Loading | (psf) | Spacing | 2-0-0 | CSI | | DEFL | in | (loc) | l/defl | L/d | PLATES | GRIP |
|---|---|---|---|---|---|---|---|---|---|---|---|---|
| TCLL (roof) | 20.0 | Plate Grip DOL | 1.25 | TC | 0.04 | Vert(LL) | n/a | - | n/a | 999 | MT20 | 244/190 |
| TCDL | 10.0 | Lumber DOL | 1.25 | BC | 0.07 | Vert(TL) | n/a | - | n/a | 999 | | |
| BCLL | 0.0* | Rep Stress Incr | YES | WB | 0.00 | Horiz(TL) | 0.00 | 9 | n/a | n/a | | |
| BCDL | 10.0 | Code | FBC2023/TPI2014 | Matrix-AS | | | | | | | Weight: 11 lb | FT = 20% |

**LUMBER**
TOP CHORD 2x4 SP No.2
BOT CHORD 2x4 SP No.2

**BRACING**
TOP CHORD Structural wood sheathing directly applied.
BOT CHORD Rigid ceiling directly applied.

**REACTIONS** (size) 1=3-7-7, 2=3-7-7, 4=3-7-7, 5=3-7-7, 6=3-7-7, 9=3-7-7
Max Horiz 1=18 (LC 11)
Max Uplift 1=-12 (LC 17), 5=-28 (LC 3)
Max Grav 1=10 (LC 11), 2=197 (LC 1), 4=159 (LC 1), 5=-6 (LC 12), 6=197 (LC 1), 9=159 (LC 1)

**FORCES** (lb) - Maximum Compression/Maximum Tension
TOP CHORD 1-2=-19/37, 2-3=-67/47, 3-4=-62/52, 4-5=0/30
BOT CHORD 2-4=-51/51

**NOTES**
1) Unbalanced roof live loads have been considered for this design.
2) Wind: ASCE 7-22; Vult=130mph (3-second gust) Vasd=101mph; TCDL=6.0psf; BCDL=6.0psf; h=15ft; B=45ft; L=24ft; eave=4ft; Cat. II; Exp B; Enclosed; MWFRS (directional) and C-C Zone3 zone; cantilever left and right exposed ; end vertical left and right exposed;C-C for members and forces & MWFRS for reactions shown; Lumber DOL=1.60 plate grip DOL=1.60
3) Truss designed for wind loads in the plane of the truss only. For studs exposed to wind (normal to the face), see Standard Industry Gable End Details as applicable, or consult qualified building designer as per ANSI/TPI 1.
4) Building Designer / Project engineer responsible for verifying applied roof live load shown covers rain loading requirements specific to the use of this truss component.
5) Gable requires continuous bottom chord bearing.
6) Gable studs spaced at 2-0-0 oc.
7) This truss has been designed for a 10.0 psf bottom chord live load nonconcurrent with any other live loads.
8) * This truss has been designed for a live load of 20.0psf on the bottom chord in all areas where a rectangle 3-06-00 tall by 2-00-00 wide will fit between the bottom chord and any other members.
9) All bearings are assumed to be SP No.2 .
10) Provide mechanical connection (by others) of truss to bearing plate capable of withstanding 12 lb uplift at joint 1 and 28 lb uplift at joint 5.
11) This truss design requires that a minimum of 7/16" structural wood sheathing be applied directly to the top chord and 1/2" gypsum sheetrock be applied directly to the bottom chord.
12) See Standard Industry Piggyback Truss Connection Detail for Connection to base truss as applicable, or consult qualified building designer.

**LOAD CASE(S)** Standard

Julius Lee PE No. 34869
MiTek Inc. DBA MiTek USA FL Cert 6634
16023 Swingley Ridge Rd. Chesterfield, MO 63017
Date:

May 21,2024

**WARNING - Verify design parameters and READ NOTES ON THIS AND INCLUDED MITEK REFERENCE PAGE MII-7473 rev. 1/2/2023 BEFORE USE.**
Design valid for use only with MiTek® connectors. This design is based only upon parameters shown, and is for an individual building component, not a truss system. Before use, the building designer must verify the applicability of design parameters and properly incorporate this design into the overall building design. Bracing indicated is to prevent buckling of individual truss web and/or chord members only. Additional temporary and permanent bracing is always required for stability and to prevent collapse with possible personal injury and property damage. For general guidance regarding the fabrication, storage, delivery, erection and bracing of trusses and truss systems, see **ANSI/TPI1 Quality Criteria and DSB-22** available from Truss Plate Institute (www.tpinst.org) and **BCSI Building Component Safety Information** available from the Structural Building Component Association (www.sbcscomponents.com)

MiTek®
16023 Swingley Ridge Rd.
Chesterfield, MO 63017
314.434.1200 / MiTek-US.com

| Job | Truss | Truss Type | Qty | Ply | Shaw |
|---|---|---|---|---|---|
| 0524-036 | PB04 | Piggyback | 12 | 1 | T33927017<br>Job Reference (optional) |



| -0-9-15 | 1-9-11 | 3-7-7 | 4-5-6 |
|---|---|---|---|
| 0-9-15 | 1-9-11 | 1-9-11 | 0-9-15 |

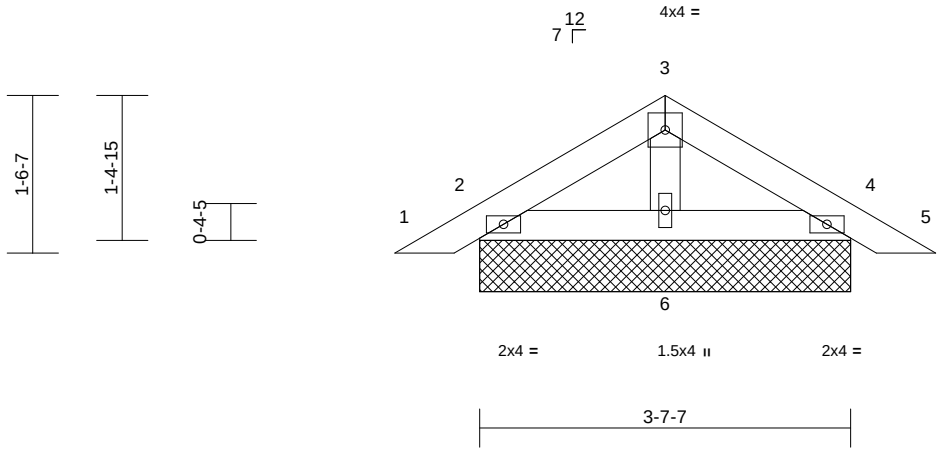


Scale = 1:22.5

| Loading | (psf) | Spacing | 2-0-0 | CSI | | DEFL | in | (loc) | l/defl | L/d | PLATES | GRIP |
|---|---|---|---|---|---|---|---|---|---|---|---|---|
| TCLL (roof) | 20.0 | Plate Grip DOL | 1.25 | TC | 0.03 | Vert(LL) | n/a | - | n/a | 999 | MT20 | 244/190 |
| TCDL | 10.0 | Lumber DOL | 1.25 | BC | 0.03 | Vert(CT) | n/a | - | n/a | 999 | | |
| BCLL | 0.0* | Rep Stress Incr | YES | WB | 0.01 | Horz(CT) | 0.00 | 4 | n/a | n/a | | |
| BCDL | 10.0 | Code | FBC2023/TPI2014 | Matrix-AS | | | | | | | Weight: 16 lb | FT = 20% |

**LUMBER**
TOP CHORD 2x4 SP No.2
BOT CHORD 2x4 SP No.2
OTHERS 2x4 SP No.2

**BRACING**
TOP CHORD Structural wood sheathing directly applied.
BOT CHORD Rigid ceiling directly applied.

**REACTIONS** (size) 2=3-7-7, 4=3-7-7, 6=3-7-7, 7=3-7-7, 11=3-7-7
Max Horiz 2=-24 (LC 10), 7=-24 (LC 10)
Max Uplift 2=-21 (LC 12), 4=-21 (LC 12), 7=-21 (LC 12), 11=-21 (LC 12)
Max Grav 2=110 (LC 1), 4=110 (LC 1), 6=135 (LC 1), 7=110 (LC 1), 11=110 (LC 1)

**FORCES** (lb) - Maximum Compression/Maximum Tension
TOP CHORD 1-2=0/16, 2-3=-34/50, 3-4=-33/45, 4-5=0/16
BOT CHORD 2-6=-4/39, 4-6=-4/39
WEBS 3-6=-62/25

**NOTES**
1) Unbalanced roof live loads have been considered for this design.
2) Wind: ASCE 7-22; Vult=130mph (3-second gust) Vasd=101mph; TCDL=6.0psf; BCDL=6.0psf; h=15ft; B=45ft; L=24ft; eave=4ft; Cat. II; Exp B; Enclosed; MWFRS (directional) and C-C Zone3 zone; cantilever left and right exposed ; end vertical left and right exposed;C-C for members and forces & MWFRS for reactions shown; Lumber DOL=1.60 plate grip DOL=1.60
3) Truss designed for wind loads in the plane of the truss only. For studs exposed to wind (normal to the face), see Standard Industry Gable End Details as applicable, or consult qualified building designer as per ANSI/TPI 1.
4) Building Designer / Project engineer responsible for verifying applied roof live load shown covers rain loading requirements specific to the use of this truss component.
5) Gable requires continuous bottom chord bearing.
6) Gable studs spaced at 4-0-0 oc.
7) This truss has been designed for a 10.0 psf bottom chord live load nonconcurrent with any other live loads.
8) * This truss has been designed for a live load of 20.0psf on the bottom chord in all areas where a rectangle 3-06-00 tall by 2-00-00 wide will fit between the bottom chord and any other members.
9) All bearings are assumed to be SP No.2 .
10) Provide mechanical connection (by others) of truss to bearing plate capable of withstanding 21 lb uplift at joint 2, 21 lb uplift at joint 4, 21 lb uplift at joint 2 and 21 lb uplift at joint 4.
11) This truss design requires that a minimum of 7/16" structural wood sheathing be applied directly to the top chord and 1/2" gypsum sheetrock be applied directly to the bottom chord.
12) See Standard Industry Piggyback Truss Connection Detail for Connection to base truss as applicable, or consult qualified building designer.

**LOAD CASE(S)** Standard

Julius Lee PE No. 34869
MiTek Inc. DBA MiTek USA FL Cert 6634
16023 Swingley Ridge Rd. Chesterfield, MO 63017
Date:

May 21,2024

**WARNING - Verify design parameters and READ NOTES ON THIS AND INCLUDED MITEK REFERENCE PAGE MII-7473 rev. 1/2/2023 BEFORE USE.**
Design valid for use only with MiTek® connectors. This design is based only upon parameters shown, and is for an individual building component, not a truss system. Before use, the building designer must verify the applicability of design parameters and properly incorporate this design into the overall building design. Bracing indicated is to prevent buckling of individual truss web and/or chord members only. Additional temporary and permanent bracing is always required for stability and to prevent collapse with possible personal injury and property damage. For general guidance regarding the fabrication, storage, delivery, erection and bracing of trusses and truss systems, see **ANSI/TPI1 Quality Criteria and DSB-22** available from Truss Plate Institute (www.tpinst.org) and **BCSI Building Component Safety Information** available from the Structural Building Component Association (www.sbcscomponents.com)

MiTek®
16023 Swingley Ridge Rd.
Chesterfield, MO 63017
314.434.1200 / MiTek-US.com

# Symbols

### PLATE LOCATION AND ORIENTATION

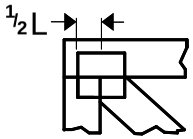


Center plate on joint unless x, y offsets are indicated. Dimensions are in ft-in-sixteenths. Apply plates to both sides of truss and fully embed teeth.

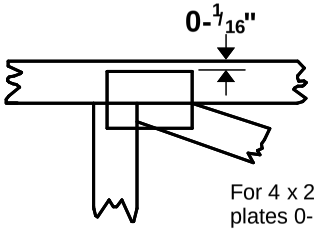


For 4 x 2 orientation, locate plates 0- 1/16" from outside edge of truss.

This symbol indicates the required direction of slots in connector plates.

* Plate location details available in MiTek software or upon request.

### PLATE SIZE

4 x 4

The first dimension is the plate width measured perpendicular to slots. Second dimension is the length parallel to slots.

### LATERAL BRACING LOCATION

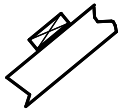

Indicated by symbol shown and/or by text in the bracing section of the output. Use T or I bracing if indicated.

### BEARING

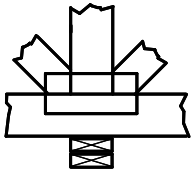

Indicates location where bearings (supports) occur. Icons vary but reaction section indicates joint number/letter where bearings occur. Min size shown is for crushing only.

**Industry Standards:**

ANSI/TPI1: National Design Specification for Metal Plate Connected Wood Truss Construction.
DSB-22: Design Standard for Bracing.
BCSI: Building Component Safety Information, Guide to Good Practice for Handling, Installing, Restraining & Bracing of Metal Plate Connected Wood Trusses.

# Numbering System

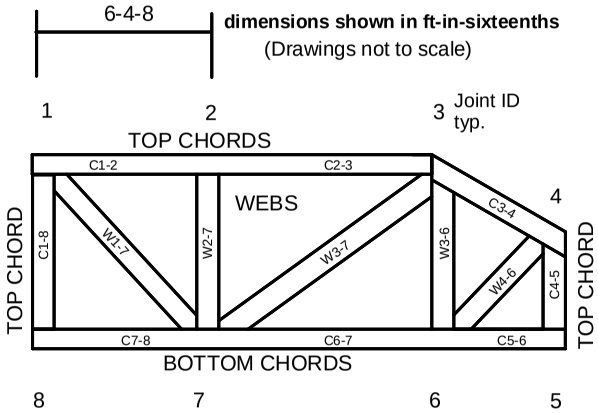


**JOINTS ARE GENERALLY NUMBERED/LETTERED CLOCKWISE AROUND THE TRUSS STARTING AT THE JOINT FARTHEST TO THE LEFT.**

**CHORDS AND WEBS ARE IDENTIFIED BY END JOINT NUMBERS/LETTERS.**

# Product Code Approvals

ICC-ES Reports:

ESR-1988, ESR-2362, ESR-2685, ESR-3282
ESR-4722, ESL-1388

# Design General Notes

Trusses are designed for wind loads in the plane of the truss unless otherwise shown.

Lumber design values are in accordance with ANSI/TPI 1 section 6.3 These truss designs rely on lumber values established by others.

© 2023 MiTek® All Rights Reserved

MiTek®



# General Safety Notes

Failure to Follow Could Cause Property Damage or Personal Injury

1. Additional stability bracing for truss system, e.g. diagonal or X-bracing, is always required. See BCSI.
2. Truss bracing must be designed by an engineer. For wide truss spacing, individual lateral braces themselves may require bracing, or alternative Tor I bracing should be considered.
3. Never exceed the design loading shown and never stack materials on inadequately braced trusses.
4. Provide copies of this truss design to the building designer, erection supervisor, property owner and all other interested parties.
5. Cut members to bear tightly against each other.
6. Place plates on each face of truss at each joint and embed fully. Knots and wane at joint locations are regulated by ANSI/TPI 1.
7. Design assumes trusses will be suitably protected from the environment in accord with ANSI/TPI 1.
8. Unless otherwise noted, moisture content of lumber shall not exceed 19% at time of fabrication.
9. Unless expressly noted, this design is not applicable for use with fire retardant, preservative treated, or green lumber.
10. Camber is a non-structural consideration and is the responsibility of truss fabricator. General practice is to camber for dead load deflection.
11. Plate type, size, orientation and location dimensions indicated are minimum plating requirements.
12. Lumber used shall be of the species and size, and in all respects, equal to or better than that specified.
13. Top chords must be sheathed or purlins provided at spacing indicated on design.
14. Bottom chords require lateral bracing at 10 ft. spacing, or less, if no ceiling is installed, unless otherwise noted.
15. Connections not shown are the responsibility of others.
16. Do not cut or alter truss member or plate without prior approval of an engineer.
17. Install and load vertically unless indicated otherwise.
18. Use of green or treated lumber may pose unacceptable environmental, health or performance risks. Consult with project engineer before use.
19. Review all portions of this design (front, back, words and pictures) before use. Reviewing pictures alone is not sufficient.
20. Design assumes manufacture in accordance with ANSI/TPI 1 Quality Criteria.
21. The design does not take into account any dynamic or other loads other than those expressly stated.

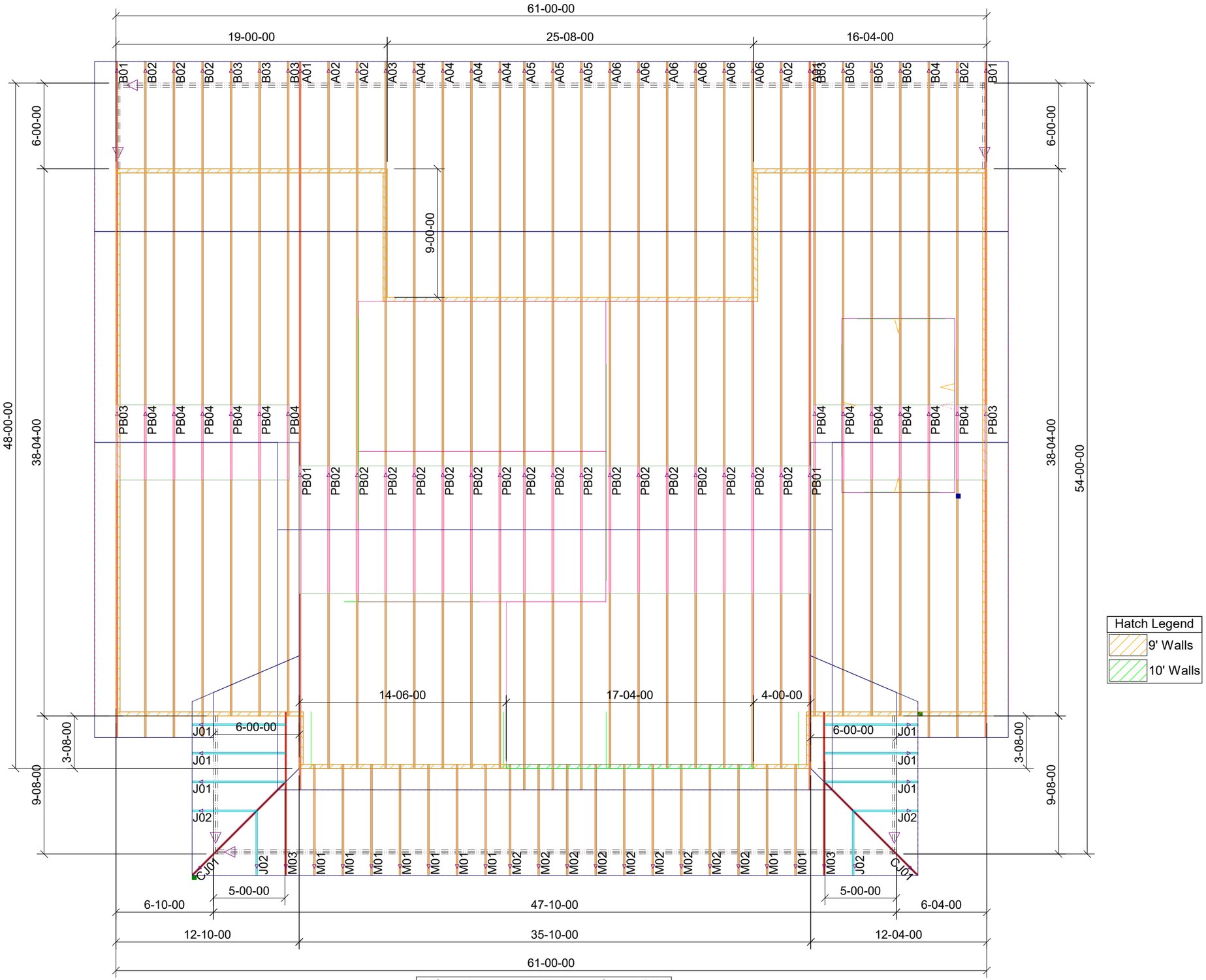


False Dormers Framed on Site

Mayo Truss Company Inc.
Ph. (386) 294-3988
Fax (386) 294-3981
mayotruss@windstream.net

Client: William Scott Construction
Date: 5/20/2024
Quote Date: / /
Seal Date: / /
Designer: Jason Degroff
Job Number: 0524-036

Shaw

Live Oak FL.