TERMITE SPECIFICATIONS:

R318.1
TERMITE PROTECTION SHALL BE PROVIDED BY REGISTERED TERMITICIDES, INCLUDING SOIL APPLIED PESTICIDES, BAITING SYSTEMS, AND PESTICIDES APPLIED TO WOOD. OR OTHER APPROVED METHODS OF TERMITE PROTECTION LABELED FOR USE AS A PREVENTATIVE TREATMENT TO NEW CONSTRUCTION (SEE SECTION 202 , REGISTERED TERMITICIDE). UPON COMPLETION OF THE APPLICATION OF THE TERMITE PROTECTIVE TREATMENT, A CERTIFICATE OF COMPLIANCE SHALL BE ISSUED TO THE BUILDING DEPARTMENT BY THE LICENSED PEST CONTROL COMPANY THAT CONTAINS THE FOLLOWING STATEMENT: "THE BUILDING HAS RECEIVED A COMPLETE TREATMENT FOR THE PREVENTION OF SUBTERRANEAN TERMITES. TREATMENT IS IN ACCORDANCE WITH RULES AND LAWS ESTABLISHED BY THE FLORIDA DEPARTMENT OF AGRICULTURE AND CONSUMER SERVICES."

NOTES:

1. METHOD OF TREATMENT SHALL BE APPROVED BY THE GOVERNING JURISDICTION "LIQUID BORATE OR BOR-A-COR" PRODUCT METHODS MUST BE DETERMINED AT PERMIT STAGE AND PRODUCT APPROVAL DATA MUST BE ON FILE WITH THE BUILDING DEPARTMENT
2. PRESSURE TREATED LUMBER THAT HAS BEEN CUT OR DRILLED THAT EXPOSES UNTREATED PORTIONS OF WOOD ARE REQUIRED TO BE FIELD TREATED TO PREVENT INSECT INFESTATION
3. OPTIONAL BORATE APPLIED TO ALL FRAME MEMBERS WITHIN 24" A.F.F.

EXTERIOR COVERING

R703.7 EXTERIOR PLASTER.
INSTALLATION OF THESE MATERIALS SHALL BE IN COMPLIANCE WITH ASTM C926 AND ASTM C1063, OR ASTM C1787 AND THE PROVISIONS OF THIS CODE.

R703.7.1 LATH.
LATH AND LATH ATTACHMENTS SHALL BE OF CORROSION-RESISTANT MATERIALS. EXPANDED METAL OR WOVEN WIRE LATH SHALL BE ATTACHED WITH 1-1/2" LONG, 11 GAGE NAILS HAVING A 7/16" HEAD, OR 1-1/2" LONG, 16 GAGE STAPLES, SPACED IN ACCORDANCE WITH ASTM C1063 OR C1787, OR AS OTHERWISE APPROVED. (REFER TO PLAN SET FOR THE ENGINEERED METHOD FOR LATH ATTACHMENT)

LATHING ACCESSORIES:
ATTACHMENTS SHALL BE OF CORROSION-RESISTANT MATERIALS. WOOD APPLICATION; 16 GA X 1 ½" LONG (3/4" - 1" CROWN) STAPLES @ 6" O.C. VERT/HORIZ INTO THE FRAMING MEMBERS. MASONRY APPLICATION; CONCRETE STUB NAIL, 3/8" (10 mm) HEAD DIA. MIN. @ 6" O.C. VERT/HORIZ. or COMPATIBLE ADHESIVES, EXTERIOR GUN-GRADE, CONSTRUCTION ADHESIVE WITH 1" DABS @ 6" O.C. or IN A SEMI-CONTINUOUS BEAD BETWEEN THE SOLID PLASTER BASE AND THE SOLID PORTION OF THE KEY ATTACHMENT FLANGE. CONTROLS JOINTS; INSTALL CONTROL JOINT LATHING ACCESSORIES IN CONFORMANCE WITH C1063. LATH SHALL NOT BE CONTINUOUS THROUGH CONTROL JOINTS, BUT SHALL BE STOPPED AND TIED AT EACH SIDE. All ACCESSORIES SHALL BE IN ACCORDANCE WITH THE LATEST ASTM C1063 & ASTM C1861.

R703.7.2 PLASTER.
PLASTERING WITH CEMENT PLASTER SHALL BE NOT LESS THAN THREE COATS WHERE APPLIED OVER ANY TYPE OF CODE-APPROVED LATH AND SHALL BE NOT LESS TWO COATS WHERE DIRECTLY APPLIED OVER MASONRY, CONCRETE, CLAY BRICK, STONE, OR TILE. IF THE PLASTER SURFACE IS COMPLETELY COVERED BY VENEER OR OTHER FACING MATERIAL OR IS COMPLETELY CONCEALED, PLASTER APPLICATION NEED BE ONLY TWO COATS, PROVIDED TOTAL THICKNESS IS AS SET IN TABLE R702.1(1).
CEMENT PLASTER SHALL BE IN ACCORDANCE WITH ASTM C926 AND MATERIAL SHALL BE IN ACCORDANCE WITH ONE OF THE TYPES LISTED IN R703.7.2.

R703.7.3 WATER-RESISTIVE BARRIERS.
WATER-RESISTIVE BARRIERS SHALL BE INSTALLED AS REQUIRED IN SECTION R703.2 AND, WHERE APPLIED OVER WOOD-BASED SHEATHING, SHALL INCLUDE A WATER-RESISTIVE VAPOR-PERMEABLE BARRIER WITH A PERFORMANCE AT LEAST EQUIVALENT TO TWO LAYERS OF GRADE D PAPER. THE INDIVIDUAL LAYERS SHALL BE INSTALLED INDEPENDENTLY SUCH THAT EACH LAYER PROVIDES A SEPARATE CONTINUOUS PLANE AND ANY FLASHING (INSTALLED IN ACCORDANCE WITH SECTION R703.4) INTENDED TO DRAIN TO THE WATER-RESISTIVE BARRIER IS DIRECTED BETWEEN THE LAYERS.

R703.2 WATER-RESISTIVE BARRIER.
NOT FEWER THAN ONE LAYER OF WATER-RESISTIVE BARRIER SHALL BE APPLIED OVER STUDS OR SHEATHING OF ALL EXTERIOR WALLS WITH FLASHING AS INDICATED IN SECTION R703.4, IN SUCH A MANNER AS TO PROVIDE A CONTINUOUS WATER-RESISTIVE BARRIER BEHIND THE EXTERIOR WALL VENEER. THE WATER-RESISTIVE BARRIER MATERIAL SHALL BE CONTINUOUS TO THE TOP OF WALLS AND TERMINATED AT PENETRATIONS AND BUILDING APPENDAGES IN A MANNER TO MEET THE REQUIREMENTS OF THE EXTERIOR WALL ENVELOPE AS DESCRIBED IN SECTION R703.1. WATER-RESISTIVE BARRIER MATERIALS SHALL COMPLY WITH ONE OF THE FOLLOWING:
1. NO. 15 FELT COMPLYING WITH ASTM D226, TYPE 1.
2. ASTM E2568, TYPE 1 OR 2.
3. ASTM E331 IN ACCORDANCE WITH SECTION R703.11.
4. OTHER APPROVED MATERIALS IN ACCORDANCE WITH THE MANUFACTURER'S INSTALLATION INSTRUCTIONS.

NO. 15 ASPHALT FELT AND WATER-RESISTIVE BARRIERS COMPLYING WITH ASTM E2556 SHALL BE APPLIED HORIZONTALLY, WITH THE UPPER LAYER LAPPED OVER THE LOWER LAYER NOT LESS THAN 2 INCHES (51MM), AND WHERE JOINTS OCCUR, SHALL BE LAPPED NOT LESS THAN 6 INCHES (152 mm).

R703.4 FLASHING.
APPROVED METAL FLASHING, VINYL FLASHING, SELF-ADHERED MEMBRANES AND MECHANICALLY ATTACHED FLEXIBLE FLASHING SHALL BE APPLIED SHINGLE-FASHION OR IN ACCORDANCE WITH THE MANUFACTURER'S INSTRUCTIONS. METAL FLASHING SHALL BE CORROSION RESISTANT. FLUID-APPLIED MEMBRANES USED AS FLASHING SHALL BE APPLIED IN ACCORDANCE WITH THE MANUFACTURER'S INSTRUCTIONS. ALL FLASHING SHALL BE APPLIED IN A MANNER TO PREVENT THE ENTRY OF WATER INTO THE WALL CAVITY OR PENETRATION OF WATER TO THE BUILDING STRUCTURAL FRAMING COMPONENTS.
SELF-ADHERED MEMBRANES USED AS FLASHING SHALL COMPLY WITH AAMA 711. ALL EXTERIOR FENESTRATION PRODUCTS SHALL BE SEALED AT THE JUNCTURE WITH THE BUILDING WALL WITH A SEALANT COMPLYING WITH AAMA 800 OR ASTM C920 CLASS 25 GRADE NS OR GREATER FOR PROPER JOINT EXPANSION AND CONTRACTION, ASTM C1281, AAMA 812, OR OTHER APPROVED STANDARD AS APPROPRIATE FOR THE TYPE OF SEALANT. FLUID-APPLIED MEMBRANES USED AS FLASHING IN EXTERIOR WALLS SHALL COMPLY WITH AAMA 714. THE FLASHING SHALL EXTEND TO THE SURFACE OF THE EXTERIOR WALL FINISH.
APPROVED FLASHINGS SHALL BE INSTALLED AT THE FOLLOWING LOCATIONS.
- EXTERIOR WINDOW/DOOR OPENINGS.
- INTERSECTION OF CHIMNEYS OR OTHER MASONRY CONSTRUCTION WITH FRAME WALLS.
- UNDER AND AT THE ENDS OF MASONRY, WOOD OR METAL COPINGS AND SILLS.
- CONTINUOUSLY ABOVE ALL PROJECTING WOOD TRIM.
- WHERE EXTERIOR PORCHES, DECKS OR STAIRS ATTACH TO A WALL OR FLOOR ASSEMBLY OF WOOD-FRAME CONSTRUCTION.
- AT WALL AND ROOF INTERSECTION.
- AT BUILT-IN GUTTERS.

R703.12 ADHERED MASONRY VENEER INSTALLATION
ADHERED MASONRY VENEER [OR STONE VENEER] - INSTALLATION SHALL COMPLY WITH THE REQUIREMENTS OF SECTION R703.7.3 AND THE REQUIREMENTS IN SECTIONS 12.1 AND 12.3 OF TMS 402/ACI 530/ASCE 5. ADHERED MASONRY VENEER SHALL BE INSTALLED IN ACCORDANCE WITH SECTION R703.7.1, ARTICLE 3.3C OF TMS 602/ACI 530.1/ASCE 6 OR THE MANUFACTURER'S INSTRUCTIONS.

EXTERIOR CEILING LATH ATTACHMENT
PER THE ASTM C 1063
7.10.2.2 DIAMOND-MESH EXPANDED METAL LATH, FLAT-RIB EXPANDED METAL LATH, AND WIRE LATH SHALL BE ATTACHED TO HORIZONTAL WOOD FRAMING MEMBERS WITH 1½-IN. (38.1-MM) ROOFING NAILS DRIVEN FLUSH WITH THE PLASTER BASE AND ATTACHED TO VERTICAL WOOD FRAMING MEMBERS WITH 6D COMMON NAILS, OR 1-IN. (25-MM) ROOFING NAILS DRIVEN TO A PENETRATION OF NOT LESS THAN ¾ IN. (19.1 MM), OR 1-IN. (25-MM) WIRE STAPLES DRIVEN FLUSH WITH THE PLASTER BASE. STAPLES SHALL HAVE CROWNS NOT LESS THAN ¾ IN. (19.05 MM) AND SHALL ENGAGE NOT LESS THAN THREE STRANDS OF LATH AND PENETRATE THE WOOD FRAMING MEMBERS NOT LESS THAN ¾ IN. (19.05 MM). WHEN METAL LATH IS APPLIED OVER SHEATHING, USE FASTENERS THAT WILL PENETRATE THE STRUCTURAL MEMBERS NOT LESS THAN ¾ IN. (19 MM).

7.10.2.3 EXPANDED 3⁄8 IN. (9.5 MM) RIB LATH SHALL BE ATTACHED TO HORIZONTAL AND VERTICAL WOOD FRAMING MEMBERS WITH NAILS OR STAPLES TO PROVIDE NOT LESS THAN 13⁄4-IN. (44.5-MM) PENETRATION INTO HORIZONTAL WOOD FRAMING MEMBERS, AND 3⁄4-IN. (19.1-MM) PENETRATION INTO VERTICAL WOOD FRAMING MEMBERS.

7.10.2.4. COMMON NAILS SHALL BE BENT OVER TO ENGAGE NOT LESS THAN THREE STRANDS OF LATH OR BE BENT OVER A RIB WHEN RIB LATH IS INSTALLED.

7.10.2.5. SCREWS USED TO ATTACH METAL PLASTER BASE TO HORIZONTAL AND VERTICAL WOOD FRAMING MEMBERS SHALL PENETRATE NOT LESS THAN 5⁄8 IN. (15.9 MM) INTO THE MEMBER WHEN THE LATH IS INSTALLED AND SHALL ENGAGE NOT LESS THAN THREE STRANDS OF LATH. WHEN INSTALLING RIB LATH, THE SCREW SHALL PASS THROUGH, BUT NOT DEFORM, THE RIB.

COASTAL FLASHINGS:
ALL FLASHING MATERIAL FOR COASTAL LOCATIONS (EX: WITHIN 3,000 FEET OF THE OCEAN) SHALL BE CORROSION RESISTANT MATERIAL (EX: ZINC AND/OR STAINLESS STEEL) AND SHALL BE SELECTED FOR COMPATIBILITY WITH ADJACENT WOOD PRESERVATIVES PER THE MANUFACTURER'S RECOMMENDATIONS.

MASTER REVISIONS

DATE	DESCRIPTION

STRUCTURAL NOTES:

CAST IN PLACE CONCRETE

1. ALL CONCRETE SHALL HAVE A MINIMUM COMPRESSIVE STRENGTH AT 28 DAYS OF 2500 PSI (SLABS) 3000 PSI (COLUMNS AND BEAMS), A SLUMP OF 5" PLUS OR MINUS 1", AND HAVE 2 TO 5% AIR ENTRAINMENT, AND A MAXIMUM WATER/CEMENT RATIO OF 0.63.
2. HOOKS SHALL BE PROVIDED AT DISCONTINUOUS ENDS OF ALL TOP BARS OF BEAMS.
3. HORIZONTAL FOOTING BARS SHALL BE BENT 25" AROUND CORNERS OR CORNER BARS WITH A 25" LAP PROVIDED EACH WAY.
4. CONCRETE COVER MIN. 3" WHEN EXPOSED TO EARTH OR 1 1/2" TO FORM U.N.O.
5. WELDED WIRE FABRIC SHALL CONFORM TO ASTM A-1064A/ A1064M. WWF SHALL BE LAPPED AT LEAST 6" AND CONTAIN AT LEAST ONE CROSS WIRE WITHIN THE 6", OR POLYPROPYLENE FIBERS FOR SLABS ON GRADE TO BE MIN .75 LBS OF FIBER PER CUBIC YARD.
6. ALL REINFORCING STEEL / STIRRUPS AND TIES SHALL BE NEW DOMESTIC DEFORMED BARS FREE FROM RUST,SCALE & OIL & SHALL MEET ASTM 615, ASTM A706, OR ASTMA 996 GRADE 40 U.N.O. REINFORCING FOR FOOTING SHALL BE SUPPORTED ON PRE-CAST CONCRETE PADS. STEEL WIRE OR PLASTIC SUPPORTS. TOP REINFORCING SHALL BE POSITIVELY SUPPORTED BY TEMPORARY STRINGERS. DOWELS FOR COLUMNS & FILLED CELLS SHALL BE SECURED IN PLACE BY USING ADDITIONAL CROSS-REINFORCING TIED TO FOOTING REINFORCING. SPLICES IN REINFORCING WHERE PERMITTED SHALL BE AS PER DETAIL MS05/S-1. SEE PLAN SET.
7. HIGH STRENGTH SIMPSON SET EPOXY-TIE ANCHORING ADHESIVE WAS USED IN THE DESIGN OF THIS PRODUCT. IF CONTRACTORS WISH TO USE A DIFFERENT EPOXY, THEY MUST FIRST CONTACT THE ENGINEER OF RECORD FOR WRITTEN APPROVAL.
8. WHERE PROJECT IS TO BE LOCATED IN KNOWN RADON GAS PREVALENT AREAS, APPENDIX "F" OF THE FLORIDA BUILDING CODE 8th. EDITION (2023) IS TO BE IMPLEMENTED. F303.4.1 CONCRETE STRENGTH IN THESE AREAS ARE TO BE A MINIMUM OF 3000 P.S.I. THEREFORE, ANY AND ALL NOTES ON THESE PLANS THAT INDICATE 2500 P.S.I. SHALL BE REPLACED WITH 3000 P.S.I. FOR THE CONCRETE STRENGTH.

MASONRY WALL CONST.

1. HOLLOW LOAD BEARING UNITS SHALL BE NORMAL WEIGHT, GRADE N, TYPE 2, CONFORMING TO ASTM C90-2016A, WITH A MINIMUM NET COMPRESSIVE STRENGTH OF 2000 PSI (f'm = 2000 PSI)
2. MORTAR SHALL BE TYPE "S", CONFORMING TO ASTM C270-14A.
3. COARSE GROUT SHALL CONFORM TO ASTM C476-19 WITH A MAXIMUM AGGREGATE SIZE OF 3/8" AND A MINIMUM COMPRESSIVE STRENGTH AT 28 DAYS OF 3000 PSI SLUMP 8" TO 11". CONTINUOUS MASONRY INSPECTIONS ARE REQUIRED DURING CONSTRUCTION.
4. GRADE 40 U.N.O. VERTICAL REINFORCEMENT SHALL BE AS NOTED ON THE DRAWINGS WITH THE CELLS FILLED WITH COARSE GROUT.
5. REINFORCING STEEL SHALL BE LAPPED PER DETAIL MS05/S-1, UNLESS OTHERWISE NOTED ON THE DRAWINGS.
6. GROUT STOPS SHALL BE PROVIDED BELOW BOND BEAM. PLASTIC SCREEN, METAL LATH STRIP OR CAVITY CAPS MAY BE USED TO PREVENT THE FLOW OF GROUT INTO CELLS BELOW. THE USE OF FELT PAPER AS A STOP IS PROHIBITED.
7. TEMPORARY BRACING AND SHORING OF WALL TO PROVIDE STABILITY DURING CONSTRUCTION SHALL BE THE RESPONSIBILITY OF THE CONTRACTOR
8. TYPICAL FILLED CELL REINFORCING SIZE AND SPACING SHALL BE ABOVE AND BELOW ALL WALL OPENINGS.
9. DO NOT APPLY UNIFORM LOADS TO MASONRY WALLS FOR (3) DAYS AND NO CONCENTRATED LOADS FOR (7) DAYS. PER CODE ACI 318-19.
10. CONSOLIDATE AND RECONSOLIDATE GROUT POURS PER CODE. GROUT SHALL BE FLUSH WITH TOP OF WALL.

WOOD CONSTRUCTION

1. ALL EXTERIOR WOOD STUD WALLS, BEARING WALLS, SHEAR WALLS AND MISC, STRUCTURAL WOOD FRAMING MEMBERS, (I.E BLOCKING OR GABLE END BRACING) SHALL BE EITHER AS SPECIFIED IN PLAN OR DETAILS. IF CONFLICTS OCCUR BETWEEN PLAN AND DETAILS. THE STRONGEST MATERIAL SHALL BE USED. AT A MINIMUM, ALL WOOD STRUCTURAL FRAMING MEMBERS SHALL BE S.P.F. #2.
2. ALL LUMBER SPECIFIED ON DRAWINGS ARE INTENDED FOR DRY USE ONLY (MOISTURE CONTENT 19% OR LESS), U.N.O. ALL WATERPROOFING AND FIRE SAFETY SYSTEMS ARE THE RESPONSIBILITY OF THE CONTRACTOR AND ARE TO BE DESIGNED AND DETAILED BY OTHERS
3. ANY WOOD FRAME INTERIOR BEARING WALL STUDS THAT HAVE HOLES IN THE CENTER OF THE STUD UP TO 1" DIA. SHALL HAVE STUD PROTECTION SHIELDS. ALL HOLES OVER 1" IN DIA. FOR PLUMBING LINES, ETC. SHALL BE REPAIRED WITH SIMPSON HSS2 STUD SHOES,TYP., U.N.O.
4. MANY OF THE NEW PRESSURE TREATED WOODS USE CHEMICALS THAT ARE CORROSIVE TO STEEL. IT IS THE CONTRACTOR'S RESPONSIBILITY TO VERIFY THE TYPE OF WOOD TREATMENT AND TO SELECT APPROPRIATE CONNECTORS THAT RESIST CORROSION. FOR EXAMPLE, ACQ-C, ACQ-D, CBA-A OR CA-B REQUIRE HOT-DIPPED GALVANIZED OR STAINLESS STEEL FASTENERS. DOT SODIUM BORATE (SBX) DOES NOT.
5. ALL EXPOSED WOOD OR WOOD IN CONTACT WITH EARTH OR CONCRETE TO BE PRESSURE TREATED.
6. UNTREATED WOOD SHALL NOT BE IN DIRECT CONTACT WITH CONCRETE OR MASONRY. SEAT PLATES SHALL BE PROVIDED AT BEARING LOCATIONS WITHOUT WOODEN TOP PLATES.
7. SEE PLAN FOR STUD PACK AND BEAM NAILING PATTERNS.
8. ALL ENGINEERING LUMBER TO HAVE THE FOLLOWING MIN VALUES U.N.O.
   PARALLAM COLUMNS: 1.8E Fb = 2400 PSI MICROLAM (LVL) BEAMS: 2.0E Fb= 2600 PSI GLULAM BEAMS: SP/SP 24F-V5 LAYUP 1.7E Fb=2400 PSI MIN.
9. SEE PLAN NOTE FOR ADDITIONAL ROOF, WALL, SHEAR WALL AND FLOOR SHEATHING REQUIREMENTS ALONG W/ NAILING INFORMATION OTHERWISE:
   ROOF DECK: PLYWOOD C-C/C-D, EXTERIOR OR OSB
   FLOOR SHEATHING: T&G A-C GROUP 1 APA RATED (48/24) SHEATHING SHALL FINISH FLUSH TO EXTERIOR WALL FACE.
   WALL SHEATHING: 7/16" STRUCTURAL I OSB EXPOSURE 1 OR 15/32" RATED OSB EXPOSURE 1
   A MINIMUM 1/8" SPACE IS RECOMMENDED BETWEEN PANELS EDGES TO ALLOW FOR EXPANSION PER ASTM C1063 AND APA PLYWOOD DESIGN SPECIFICATIONS. SHEATHING SHALL NOT BE USED AS WEATHER RESISTANCE BARRIER UNLESS SPECIFIED BY MANUFACTURER.
10. LATH AND LATH ATTACHMENTS SHALL BE OF CORROSION-RESISTANT MATERIALS. EXPANDED METAL OR WOVEN WIRE LATH SHALL BE ATTACHED TO WOOD SHEATHING WITH 1 1/2" LONG, 11 GAGE NAILS HAVING A 7/16" HEAD. OR 1 1/2" LONG, 16 GAGE STAPLES IN ACCORDANCE WITH ASTM C1062 OR C1787, OR AS OTHERWISE APPROVED (REF. 2023 FBC-R-R703.7.1). (REFER TO SHEET WF138/S-1 FOR THE ENGINEERED METHOD FOR LATH ATTACHMENT)

PRE ENGINEERED WOOD TRUSSES

1. ALL PREFABRICATED WOOD TRUSSES SHALL BE SECURELY FASTENED TO THEIR SUPPORTING WALLS OR BEAMS WITH HURRICANE CLIPS OR ANCHORS PER STRUCTURAL PLAN
2. PREFABRICATED WOOD TRUSSES SHALL BE DESIGNED IN ACCORDANCE WITH THE LATEST EDITION OF THE "NATIONAL DESIGN SPECIFICATION FOR STRESS -GRADE LUMBER AND ITS FASTENERS" AS RECOMMENDED BY THE NATIONAL FOREST PRODUCTS ASSOCIATION.
3. TRUSS MEMBERS AND CONNECTIONS SHALL BE PROPORTIONED (WITH A MAXIMUM ALLOWABLE STRESS INCREASE FOR LOAD DURATION OF 25%) TO WITHSTAND THE LIVE LOADS GIVEN IN THE NOTES AND TOTAL DEAD LOAD.
4. BRIDGING FOR PRE-ENGINEERED TRUSSES SHALL BE AS REQUIRED BY THE TRUSS MANUFACTURER UNLESS NOTED ON THE PLANS.
5. TRUSS ELEVATIONS AND SECTIONS ARE FOR GENERAL CONFIGURATION OF TRUSSES ONLY. WEB MEMBERS ARE NOT SHOWN, BUT SHALL BE DESIGNED BY THE TRUSS MANUFACTURER IN ACCORDANCE WITH THE FRAMING DESIGN LOADS.
6. DESIGN SPECIFICATIONS FOR LIGHT WEIGHT METAL PLATE CONNECTED WOOD TRUSSES PER THE TRUSS PLATE INSTITUTE TPI LATEST EDITION.
7. PRE-ENGINEERED WOOD TRUSSES SHALL BE DESIGNED BY THE MANUFACTURER IN ACCORDANCE WITH SPECIFIED LOADS AND GOVERNING CODES. SUBMITTALS SHALL INCLUDE TRUSS FRAMING PLANS AND DETAILS SHOWING MEMBER SIZES, BRACING, ANCHORAGE, CONNECTIONS, TRUSS LOCATIONS, AND PERMANENT BRACING AND/OR BRIDGING AS REQUIRED FOR ERECTION AND FOR THE PERMANENT STRUCTURE. EACH SUBMITTAL SHALL BE SIGNED AND SEALED BY A FLORIDA REGISTERED STRUCTURAL ENGINEER. SUBMIT 3 COPIES FOR REVIEW AND APPROVAL PRIOR TO FABRICATION.
8. THE TRUSS MANUFACTURER SHALL DETERMINE ALL SPANS WORKING POINTS, BEARING POINTS, AND SIMILAR CONDITIONS. TRUSS SHOP DRAWINGS SHALL SHOW ALL TRUSSES, ALL BRACING MEMBERS, AND ALL TRUSS TO TRUSS HANGERS.

UPLIFT CONNECTORS

1. UPLIFT CONNECTORS SUCH AS HURRICANE CLIPS, TRUSS ANCHORS AND ANCHOR BOLTS ARE ONLY REQUIRED ON MEMBERS IN WALLS THAT ARE EXPOSED TO UPLIFT OR LATERAL FORCES. INTERIOR LOAD BEARING WALLS ARE NOT ALWAYS EXPOSED TO UPLIFT FORCES. THE MEMBERS OF THESE WALLS WOULD NOT NEED TO HAVE CONNECTORS APPLIED. PLEASE COORDINATE WITH THE TRUSS ENGINEER FOR THE LOCATION OF THESE WALLS, AND STRUCTURAL PLANS FOR MORE INFO.

FIELD REPAIR NOTES

1. MISSED "J" BOLTS FOR WOOD BEARING WALLS MAY BE SUBSTITUTED WITH 1/2" DIA. EPOXY ANCHORS WITH 7" EMBEDMENT. SIMPSON "SET" EPOXY ADHESIVE BINDER FOLLOWING ALL MANUFACTURER'S RECOMMENDATIONS OR SIMPSON 1/2" TITEN HD BOLTS WITH MINIMUM 7" EMBEDMENT. SEE PLAN FOR EMBEDMENT DEPTH AT FLOOR STEPS.
2. FOR MISSED VERT. DOWELS, DRILL A 3/4" DIAMETER HOLE 6" DEEP AT THE LOCATION OF THE OMITTED REBAR AND INSTALL A 32" LONG #5 BAR INTO THE EPOXY FILLED HOLE. USE A TWO PART EMBEDMENT EPOXY (SIMPSON HIGH STRENGTH EPOXY-TIE ANCHORING ADHESIVE) MIXED PER THE MFGR'S INSTRUCTIONS. ASSURE THAT ALL DUST AND DEBRIS FROM DRILLING ARE REMOVED FROM THE HOLE BY BRUSHING AND USING COMPRESSED AIR PRIOR TO APPLYING THE EPOXY. ALLOW THE EPOXY TO CURE TO THE MANUFACTURER'S SPECIFICATIONS, THEN FILL THE CELL IN THE NORMAL WAY DURING BOND BEAM POUR.
3. FOR MORTAR JOINTS LESS THAN 1/4", PROVIDE (1) #5 VERT. IN CONC. FILLED CELL EACH SIDE OF THE JOINT (BAR DOES NOT HAVE TO BE CONT. TO FOOTING).
4. MISSED LINTEL STRAPS FOR MASONRY CONSTRUCTION MAY BE SUBSTITUTED WITH (1) SIMPSON MTSM16 TWIST STRAP W/ (4) ¼"x 2¼" TITENS TO MASONRY AND (7)-10d NAILS TO TRUSS FOR UPLIFTS LESS THAN 860 LBS (USE (2) MTSM16 FOR UPLIFTS LESS THAN 1720#). IF CORNER STRAP IS MISSED CONTRACTOR TO INSTALL (2) SIMPSON HGAM10 W/ (4) 1/4" x 1 1/2" SDS SCREWS AND (5) 1/4" x 2 1/4" TITENS ONE EACH SIDE OF TRUSS.

   NO MORE THAN 10 STRAPS MAY BE SUBSTITUTED OR NO MORE THAN 3 IN A ROW WITHOUT APPROVAL FROM EOR. IF GIRDER TRUSS CONNECTIONS ARE MISSED, CONTACT THE EOR FOR SUBSTITUTION.
5. IF MISSED, MSTAM36 OR MSTAM40 STRAP IS MISSED FOR 2ND FLOOR JAMB STUD CONNECTION, CONTRACTOR MAY INSTALL SIMPSON HTT5 w/ (26) 16d x 2-1/2" NAILS AND 5/8" ANCHOR BOLT SET IN SIMPSON HIGH STRENGTH EPOXY W/ MIN 12" EMBEDMENT AND MIN 3" EDGE DISTANCE. CONTACT EOR IF STRAPS ARE MISSED UNDER GIRDER JAMB STUD LOCATIONS.

STRUCTURAL DESIGN CRITERIA

CODE CRITERIA

- FLORIDA BUILDING CODE 8TH EDITION (2023) RESIDENTIAL
- FLORIDA FIRE PREVENTION CODE 8TH EDITION (2023)
- FLORIDA BUILDING CODE ACCESSIBILITY 8TH EDITION (2023) RESIDENTIAL
- NFPA 70-20. NATIONAL ELECTRICAL CODES (NEC 2020)
- BUILDING CODE REQUIREMENTS FOR STRUCTURAL CONCRETE — (ACI 318-19)
- SPECIFICATIONS FOR STRUCTURAL CONCRETE — (ACI 301-20)
- BUILDING CODE REQUIREMENTS FOR MASONRY STRUCTURES — (ACI 530-13)
- NATIONAL DESIGN SPECIFICATION FOR WOOD CONSTRUCTION — 2018 EDITION
- WOOD FRAMED CONSTRUCTION MANUAL 2018 EDITION
- APA PLYWOOD DESIGN SPECIFICATION E30-19
- AMERICAN SOCIETY OF CIVIL ENGINEERS: ASCE/SEI 7-22
- ALUMINUM DESIGN MANUAL — AAF-20 (AA ADM-2020)

1. CODE REQUIREMENTS: IT IS THE INTENT THAT ALL WORK SHALL CONFORM TO THE ADOPTED CODES, STANDARDS AND RULES OF THE ADMINISTRATIVE AUTHORITY HAVING JURISDICTION.
2. ALL WORK SHALL CONFORM WITH DRAWINGS AND SPECIFICATIONS IN ACCORDANCE WITH THE REQUIREMENTS OF ALL THE FOLLOWING WHERE APPLICABLE:
(A) GOVERNING MUNICIPAL AND REGULATORY AGENCIES
(B) LOCAL STATE AND FEDERAL BODIES

DEFLECTION CRITERIA

			COMMMENTS:
ROOF TRUSSES*	LL/360	TL/240	
ROOF RAFTERS	LL/180	TL/120	
ROOF RAFTERS (W/O CLG)	LL/360	TL/240	
FLOOR TRUSSES/ BEAMS **	LL/360	TL/240	
FLOOR I-JOIST***	LL/480	TL/240	

*TL MAX 2" UP TO 40FT SPAN
**TL MAX 3/4"
*** TL MAX 1/2"
**** TL MAX 1/4" DIFFERENTIAL BETWEEN ADJACENT TRUSSES

GENERAL ROOF LOADING

	SHINGLE/METAL ROOF (PSF)	FLAT ROOF (PSF)	TILE ROOF (PSF)	HEAVY ROOF (PSF)
TOP CHORD LL	20	30	20	20
TOP CHORD DL	10	10	15	25
BOTTOM CHORD LL*	0	0	0	0
BOTTOM CHORD DL	10	10	10	10
TOTAL (PSF)	40	50	45	55
BOTTOM CHORD LL (OPT)				
ATTICS W/ LIMITED STORAGE	20			
ATTICS W/ HEAVY STORAGE	50			
* ATTICS W/ NO STORAGE (NON-CONCURRENT)	10			

NOTE: LL REDUCTIONS ARE ALLOWED PER CODE BUT ONLY WITH WRITTEN APPROVAL FROM EOR OR INDICATED ON PLAN

GENERAL FLOOR LOADING

		COMMMENTS:
TOP CHORD LL	40 (PSF)	
TOP CHORD DL	10 (PSF)	
BOTTOM CHORD LL	0 (PSF)	
BOTTOM CHORD DL	5 (PSF)	

SPECIAL FLOOR LOADING

COMMENTS:
(PSF) = UNIFORM LOADS
(LBS) = CONCENTRATED LOADS

GAME ROOM	60 (PSF)
BALCONIES/ DECKS	40 (PSF)
BALCONIES OVER 100 SQ:FT	100 (PSF)
LIGHT STORAGE	125 (PSF)
LIBRARIES READING ROOMS	60 (PSF)
LIBRARIES STACK ROOMS	150 (PSF)
GUARDS	200 (LBS) (h,I)
HANDRAILS (d)	200 (PSF) (h)
GUARD RAILS IN FILL COMP. (f)	50 (PSF) (h)
STAIRS	40 (PSF) 300 (LBS)
NON SLEEPING ROOMS	40 (PSF)
SLEEPING ROOMS	30 (PSF)
HABITABLE ATTICS SERVED W/ FIXED STAIRS	30 (PSF)
PASSENGER VEHICLE GARAGES	50 (PSF) 2000 (LBS)

c. INDIVIDUAL STAIR TREADS SHALL BE CAPABLE OF SUPPORTING THE UNIFORMLY DISTRIBUTED LIVE LOAD OR A 300-POUND CONCENTRATED LOAD APPLIED ON AN AREA OF 2 INCHES BY 2 INCHES. WHICHEVER PRODUCES THE GREATER STRESSES.
d. A SINGLE CONCENTRATED LOAD APPLIED IN ANY DIRECTION AT ANY POINT ALONG THE TOP. FOR A GUARD NOT REQUIRED TO SERVE AS A HANDRAIL, THE LOAD NEED NOT BE APPLIED TO THE TOP ELEMENT OF THE GUARD IN A DIRECTION PARALLEL TO SUCH ELEMENT.
f. BALUSTRADE AND PANELS FILLERS SHALL BE DESIGNED TO WITHSTAND A HORIZONTALLY APPLIED NORMAL LOAD OF 50 POUNDS ON AN AREA EQUAL TO 1 SQ. FT.
h. GLAZING USED IN HANDRAIL ASSEMBLIES AND GUARDS SHALL BE DESIGNED WITH A LOAD ADJUSTMENT FACTOR OF 4. THE LOAD ADJUSTMENT FACTOR SHALL BE APPLIED TO EACH OF THE CONCENTRATED LOADS APPLIED TO THE TOP OF THE RAIL, AND TO THE LOAD ON THE IN-FILL COMPONENTS. THESE LOADS SHALL BE DETERMINED INDEPENDENT OF ONE ANOTHER, AND LOADS ARE ASSUMED NOT TO OCCUR WITH ANY OTHER LIVE LOAD.
I. WHERE THE TOP OF A GUARD SYSTEM IS NOT REQUIRED TO SERVE AS A HANDRAIL, THE SINGLE CONCENTRATED LOAD SHALL BE APPLIED AT ANY POINT ALONG THE TOP, IN THE VERTICAL DOWNWARD DIRECTION AND IN THE HORIZONTAL DIRECTION AWAY FROM THE WALKING SURFACE. WHERE THE TOP OF A GUARD IS ALSO SERVING AS THE HANDRAIL, A SINGLE CONCENTRATED LOAD SHALL BE APPLIED IN ANY DIRECTION AT ANY POINT ALONG THE TOP. CONCENTRATED LOAD SHALL NOT BE APPLIED CONCURRENTLY.ANOTHER, AND LOADS ARE ASSUMED NOT TO OCCUR WITH ANY OTHER LIVE LOAD.

WIND LOADING CRITERIA

WIND SPEED (ULTIMATE)	130.0 MPH
WIND SPEED (ALLOWABLE)	108.0 MPH
EXPOSURE CATEGORY	B
BUILDING CATEGORY	II
BUILDING TYPE	V
ENCLOSURE CLASSIFICATION	ENCLOSED
INTERNAL PRESSURE COEFFICIENT	+/- 0.18

ASCE 7-22 WALL DESIGN ALLOWABLE COMPONENTS AND CLADDING WIND PRESSURES AND SUCTIONS ≤ 30 ft

MEAN ROOF HEIGHT ≤ 15 ft (1-STORY)				MEAN ROOF HEIGHT ≤ 30 ft (2-STORY)			
WALL ZONE (4)		WALL ZONE (5)		WALL ZONE (4)		WALL ZONE (5)	
(A)	+14.9 | -16.2	(B)	+14.9 | -20.0	(A)	+18.2 | -19.8	(B)	+18.2 | -24.4
(C)	+14.3 | -15.6	(D)	+14.3 | -18.7	(C)	+17.4 | -19.0	(D)	+17.4 | -22.8
(E)	+13.4 | -14.7	(F)	+13.4 | -16.9	(E)	+16.3 | -17.9	(F)	+16.3 | -20.6
(G)	+12.7 | -14.0	(H)	+12.7 | -15.6	(G)	+15.5 | -17.1	(H)	+15.5 | -19.0
GARAGE DOORS				GARAGE DOORS			
(J)	+13.3 | -15.0	SINGLE WIDTH (MIN. SIZE: 8'-0" x 7'-0")		(J)	+16.2 | -18.3	SINGLE WIDTH (MIN. SIZE: 8'-0" x 7'-0")	
(K)	+12.7 | -14.1	DOUBLE WIDTH (MIN. SIZE: 16'-0" x 7'-0")		(K)	+15.5 | -17.2	DOUBLE WIDTH (MIN. SIZE: 16'-0" x 7'-0")	
SOFFIT +14.9 | -20.0				SOFFIT +18.2 | -24.4			

GENERAL PRESSURE NOTES

NOTES:
1. MULTIPLY THE ABOVE PRESSURES BY 1.67 TO GET ULTIMATE WIND PRESSURES.
2. "a" = END ZONE IS ONLY WITHIN 4'-0" OF ALL EXTERIOR BUILDING CORNERS.
*INDICATED PRESSURES CAN BE INTERPOLATED FOR OTHER DOOR SIZES, OTHERWISE USE LOAD ASSOCIATED WITH THE LOWER EFFECTIVE AREAS.
3. DESIGNATED AREAS WHERE THE ULTIMATE WIND SPEED IS 140 MPH OR GREATER CONTRACTOR TO PROVIDE ADDITIONAL INFORMATION AS REQUIRED FOR PERMITTING TO INCLUDE IMPACT GLAZING, SHUTTERS, OR WOOD STRUCTURE PANELS PER THE FBCR R301.2.1.2 PROTECTION OF OPENINGS.

WIND PRESSURE AND SUCTION DIAGRAM

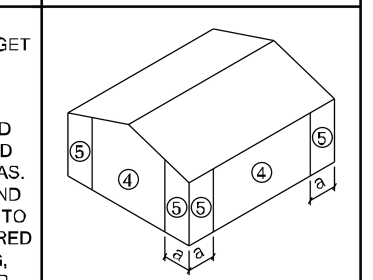

DIAGRAM

CARE AND MAINTENANCE

YEARLY MAINTENANCE AND INSPECTIONS BY THE BUILDER/HOMEOWNER ARE NECESSARY FOR THE FUTURE LIFE OF THIS HOME. CARE MUST BE TAKEN TO CHECK WINDOWS AND DOORS FOR CAULKING, REMOVE LEAVES AND DEBRIS OFF ROOFS, MAKE SURE THAT WATER FLOW IS AWAY FROM THE HOUSE AND HAVE YOUR HOME REPAINTED EVERY 3 — 5 YEARS TO PROTECT THE COATINGS. THE DESIGNER AND ENGINEER OF RECORD ARE NOT RESPONSIBLE FOR THE UPKEEP OF THE HOME AND WILL NOT BE HELD LIABLE FOR INSTANCES THAT MAY OCCUR OVER THE NORMAL LIFE OF THE HOME WITHOUT PROPER MAINTENANCE.

GENERAL NOTES:

1. ALL EXTERIOR WALLS SHALL BE ASSUMED TO BE LOAD BEARING. SEE PLAN FOR C.M.U WALL REINFORCEMENT LOCATIONS.
2. WINDOW AND DOOR SUPPLIERS SHALL PROVIDE ROUGH OPENING INFO WHICH SHALL HAVE PRECEDENCE OVER THE PLAN.
3. CABINET MFRS. SHOP DRAWINGS SHALL HAVE PRECEDENCE OVER THE INTERIOR CABINET ELEVATIONS IF SHOWN.
4. DO NOT SCALE PLANS. DIMENSIONS ARE TO BE FOLLOWED AS INDICATED.
5. ALL GLASS LOCATED IN HAZARDOUS LOCATIONS SHALL COMPLY WITH SECTION R308 OF THE FLORIDA BUILDING CODE 8TH EDITION (2023) RESIDENTIAL.

CONTROL OF CONSTRUCTION SITE:

THE DESIGNER/ARCHITECT AND ENGINEER OF RECORD (EOR) HAVE NO CONTROL OVER THE CONSTRUCTION SITE AND SHALL NOT BE RESPONSIBLE IN ANY MANNER FOR CONTROL OF THE CONSTRUCTION SITE INCLUDING, BUT NOT LIMITED TO, SCHEDULING AND SEQUENCING OF WORK, JOBSITE SAFETY, AND VENTILATION OF THE BUILDING AND THEREBY SHALL NOT BE RESPONSIBLE FOR THE INDOOR AIR QUALITY, OR THE EFFECTS THEREOF, FOR ANY REASON WHATSOEVER. THE DESIGNER/ARCHITECT AND EOR HAS NO DUTY TO PROTECT, WITHOUT LIMITATION, THE RESIDENCE, CONSTRUCTION SITE, MATERIALS, OR EQUIPMENT, FROM MOISTURE, MOLD, FUNGUS, FIRE, THEFT, VANDALISM, TRESPASS, OR ANY OTHER PERIL OR CONDITION, AT ANY TIME, EXPRESSLY INCLUDING, BUT NOT LIMITED TO, THE PERIOD OF TIME BEFORE CONSTRUCTION, DURING THE CONSTRUCTION OF THE PROJECT, OR AFTER CONSTRUCTION AND THE DESIGNER/ ARCHITECT AND EOR HAS NO DUTY TO TAKE ANY ACTION OR PREVENTIVE MEASURES TO PROTECT SUCH PROPERTY AGAINST ANY SUCH PERIL AT ANY TIME FOR ANY REASON.

ADAMS HOMES
Of Northwest Florida

3000 GULFBREEZE PARKWAY GULFBREEZE, FLORIDA 32563

MODEL 1970

INDEX OF DRAWINGS

SHT #	TITLE
1	COVER SHEET
2	FLOOR PLAN
3	FOUNDATION PLAN
4	ELECTRICAL PLAN
5	ELEVATIONS
6	TRUSS LAYOUT
S-1	LINTEL PLAN AND DETAILS
S-2	DETAILS
S-3	DETAILS
S-4	DETAILS
S-5	PRODUCT INFO. SHEET
WP	WATERPROOFING DETAILS

BUILDER NOTICE:

It is the intent of Designer/Engineer listed in the titleblock of these documents that these documents be accurate, providing Licensed Professionals clear information. Every attempt has been made to prevent error. The Builder and all subcontractors are required to review all the information contained in these documents, prior to the commencement of any work. The Designer/Engineer are not responsible for any plan errors, omissions,or misinterpretations undetected and not reported to the Designer / Engineer prior to construction. All construction MUST be in accordance to the information found in these documents. Any questions regarding the information found in these plans should be directed to our Quality Assurance Manager immediately. No backcharges will be considered for reimbursement by the Designer/Engineer without advanced notification and approval by the Designer/Engineer.
Payments will be made in accordance to the terms of the agreement.

CODE REFERENCES ARE SUMMARIES OF CODE SECTIONS. SEE FBCR (CURRENT VERSION) FOR COMPLETE CODE INFORMATION.

SCAN QR CODE FOR THE COMPLETE FBCR →

CA No. 9161
AA26003115
Making Dreams Come True
TOTAL SOLUTIONS GROUP
258 Southhall Lane, Suite 200
Maitland, Florida, 32751
(407) 800-2333
CARL A. BROWN, PE - FL # 56126
SCOTT LEWKOWSKI, PE - FL #78750
100% Employee Owned
myTSGhome.com

MUNICIPAL STAMP AREA

Columbia County Building Department
Plans Reviewed for Code Compliance
State of Florida

SIGNATURE & SEAL
7/30/2025

CARL A. BROWN
LICENSE
No 56126
STATE OF FLORIDA
PROFESSIONAL ENGINEER

To the best of the Engineer's knowledge, information and belief, the structural plans and specifications contain within these drawings comply with the 2023 Florida Building Code- Residential 8th Edition. Engineer's signature and seal is only for the structural engineering portions of the drawing pages bearing engineer's signature and seal.

Builder:
ADAMS HOMES
FLORIDA CONTRACTORS LICENSE NO. CRC1330146
100 WEST GARDEN STREET
PENSACOLA FL 32502
Division Location: GAINESVILLE

LOT: 38	BLK:	UNIT:

Community: The Preserve at Laurel Lake
Plan Name: 1970
Project Address: 581 SW Bellflower Dr. Lake City, FL
Client No.:

Project No: 25-07823
Sheet No: 1
COVER SHEET

BEARING WOOD INTERIOR WALL SCHEDULE

MARK	STUD SPACING	CONNECTION & FASTENERS TOP	CONNECTION & FASTENERS BOTTOM	LUMBER SPECIES	UPLIFT CAP.(#)
BW1	16"	(2) 16d TOENAILS	(2) 16d TOENAILS	SPF	0
BW2	16"	SP2 W/ (6)-10d NAILS	SP1 W/ (6) 10d NAILS	SPF	402
BW3	16"	SP4 W/ (6) 10d X 1 1/2" NAILS	SP4 W/ (6) 10d X 1 1/2" NAILS	SPF	571
BW4	16"	(2) 16d TOENAILS	(2) 16d TOENAILS	SYP	0
BW5	16"	SP2 W/ (6) 10d NAILS	SP1 W/ (6) 10d NAILS	SYP	439
BW6	16"	SP4 W/ (6) 10d X 1 1/2" NAILS	SP4 W/ (6) 10d X 1 1/2" NAILS	SYP	665
BW7	12"	(2) 16d TOENAILS	(2) 16d TOENAILS	SPF	0
BW8	12"	SP2 W/ (6)-10d NAILS	SP1 W/ (6)-10d NAILS	SPF	535
BW9	12"	SP4 W/ (6) 10d X 1 1/2" NAILS	SP4 W/ (6) 10d X 1 1/2" NAILS	SPF	760
BW10	12"	(2) 16d TOENAILS	(2) 16d TOENAILS	SYP	0
BW11	12"	SP2 W/ (6)-10d NAILS	SP1 W/ (6)-10d NAILS	SYP	585
BW12	12"	SP4 W/ (6) 10d X 1 1/2" NAILS	SP4 W/ (6) 10d X 1 1/2" NAILS	SYP	885

NOTE: 2 x 4 WALLS ARE ASSUMED U.N.O. ON FLOOR PLANS

* ALL LUMBER TO BE GRADE #2
** CONNECTIONS TO BE INSTALLED TO EACH STUD AS INDICATED
*** SPS"S & SPS"S CAN BE SUB. FOR SP4"S W/ RESPECT TO STUD SIZE

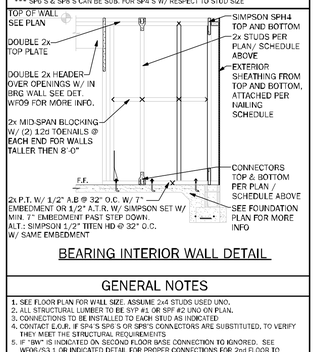

BEARING INTERIOR WALL DETAIL

GENERAL NOTES

1. SEE FLOOR PLAN FOR WALL SIZE. ASSUME 2x4 STUDS USED UNO.
2. ALL STRUCTURAL LUMBER TO BE SYP #1 OR SPF #2 UNO ON PLAN.
3. CONNECTIONS TO BE INSTALLED TO EACH STUD AS INDICATED.
4. CONTACT E.O.R. IF SP4"S SPS"S OR SPS"S CONNECTORS ARE SUBSTITUTED, TO VERIFY THEY MEET THE STRUCTURAL REQUIREMENTS
5. IF "BW" IS INDICATED ON SECOND FLOOR BASE CONNECTION TO IGNORED. SEE WF06/S3.1 OR INDICATED DETAIL FOR PROPER CONNECTIONS FOR 2nd FLOOR TO FIRST FLOOR CONNECTIONS. (NOTE: THIS IS FOR 2 STORY PROJECTS ONLY)
6. IF "SW" IS INDICATED THE WALL IS CONSIDERED A SHEARWALL AND REQUIRES MIN. 7/16" OSB PLYWOOD W/ 8d NAILS AT 4" O.C. IN FIELD AND EDGE TO (1) SIDE OF WALL
7. ALL 2X EXTERIOR WALLS W/ EXTERIOR SHEATHING ATTACHED PER NAILING SCHEDULE ACT AS SHEARWALLS. SEE PLAN AND WALLS SECTIONS FOR STUD SPACING AND GRADE
8. IF THE BEARING WALL IS INDICATED WITH THE BW1, BW4, BW7, BW10 THESE WALLS ARE ONLY SUPPORTING THE FLOOR LOAD AND DO NOT HAVE UPLIFT, THE STUDS ARE TOE NAILED TO THE PLATE AND THE 2x PLATE CAN BE ATTACHED WITH HARD CASED NAILS (GUN NAILS) AND WILL NOT REQUIRE THE ANCHOR BOLT ATTACHMENT INDICATED IN THE BEARING WALL SCHEDULE.

COLUMN SCHEDULE

MARK	COLUMN SIZE	(BASE) CONN. & FASTENER	UPLIFT(Lb)
C1	(3) 2 x 4 #2 SPF	(4) 16d TOENAILS	0
C2	(3) 2 x 4 #2 SPF	DTT22 W/ 1/2" WEDGE ANCHOR* & (8) 1/4" X 1 1/2" SDS SCREWS	2145
C3	(3) 2 x 4 SYP #1 -OR-	(4) - 16d TOENAILS	0
C4	(4) 2 x 4 SPF #2	DTT22 W/ 1/2" WEDGE ANCHOR* & (8) 1/4" X 1 1/2" SDS SCREWS	2145
C5	4 x 4 P.T.#2 SYP POST	ABU44 W/ 5/8" ATR** & (12) - 16d NAILS	G = 6665 U = 2200
C6	6 x 6 P.T. #2 SYP POST	ABU66 W/ 5/8" ATR** & (12) 16d NAILS	G = 12000 U = 2300
C7	8 x 8 P.T. #2 SYP POST	ABU88 W/ (2) - 5/8" ATR** & (18) - 16d NAILS	G = 24335 U = 2320
C8	3.5 x 3.5 P.L. 1.8E Fb=2400 PSI (WGLMANIZED IF EXT.)	HDU5-SDS2.5 W/ (14) 1/4" x 2 1/2" SDS WS & 5/8" EPOXY ANCHOR. OR ATR* *	5645
C9	3.5 x 5.25 P.L. 1.8E Fb=2400 PSI (WGLMANIZED IF EXT.)	HDU5-SDS2.5 W/ (14) 1/4" x 2 1/2" SDS WS & 5/8" EXOPY ANCHOR. OR ATR* *	5645
C10	3.5 x 7 P.L. 1.8E Fb=2400 PSI (WGLMANIZED IF EXT.)	HDU8-SDS2.5 W/ (20) 1/4" x 2 1/2" SDS WS & 7/8" EPOXY ANCHOR. OR ATR* * *	6970
C11	5.25 x 5.25 P.L. 1.8E Fb=2400 PSI (WGLMANIZED IF EXT.)	HDU8-SDS2.5 W/ (20) 1/4" x 2 1/2" SDS WS & 7/8" EPOXY ANCHOR. OR ATR* * *	7870
C12	7 x 7 P.L. 1.8E Fb=2400 PSI (WGLMANIZED IF EXT.)	HDU8-SDS2.5 W/ (20) 1/4" x 2 1/2" SDS WS & 7/8" EPOXY ANCHOR. OR ATR* * *	7870
C13	5.25" x 7" P.L. 1.8E Fb=2400 PSI (WGLMANIZED IF EXT.)	HDU8-SDS2.5 W/ 7/8" ATR AND (20) 1/4" x 2½" SDS WOOD SCREWS	7870

GENERAL COLUMN NOTES

1. SEE FLOOR PLAN FOR WALL WIDTH. STUD PACKS TO MATCH WALL WIDTH UNO.
2. ALL STRUCTURAL LUMBER TO BE SYP #1 OR SPF #2 UNO ON PLAN.
3. NAIL BUILT UP STUDS PER DETAIL WF37
4. MINIMUM BOLT EMBEDMENT:
   5" EMBEDMENT FOR 1/2" ATR
   6" EMBEDMENT FOR 5/8" ATR
   8" EMBEDMENT FOR 7/8" ATR
5. IF (C) COLUMN IS INDICATED ON SECOND FLOOR, THE BASE CONNECTION IS NOT REQUIRED. (SEE INDICATED CALL OUT ON PLAN FOR ATTACHMENT)
6. SEE WOOD CONSTRUCTION NOTE #4 ON COVER SHEET FOR CORROSION INFORMATION
7. **SAME NOMINAL SIZE PARALLAM COLUMNS (1.8E) MAY BE SUBSTITUTED FOR ANY P.T. SYP POST NOTED IN THE PLANS**

COMMON NAIL vs. PNEUMATIC GUN NAILS:

COMMON NAIL	DIA. / LENGTH	PNEUMATIC GUN NAIL DIA.-LENGTH	COMMON vs. GUN NAIL SPACING	APPLICATION
8d	0.131" X 2 ½"	0.131" X 2 ½"	SEE PLAN RING SHANK ON ROOF	SHEATHING ROOF & WALLS
10d OR 12d	0.148" X 3" 0.148" X 3 ¼"	0.131" X 3" 0.131" X 3 ¼"	SEE PLAN	BLOCKING & TOE NAILS & TOP PLATE
12d	0.148" X 3 ¼"	0.131" X 3 ¼"	8" O.C.(COMMON) 6" O.C.(GUN NAIL)	STUD WALL CORNERS
10d	0.148" X 3"	0.131" X 3"	8" O.C.(COMMON) 6" O.C.(GUN NAIL)	STUD PACK COLUMNS
16d	0.162" X 3 ½"	0.131" X 3 ¼"	(2) 16D(COMMON) (3) 16D (GUN NAILS)	SEE PLAN

BEAM SCHEDULE

MARK	BEAM SIZE	CONNECTIONS
BM1	(2) - 2 x 8 #2 SYP W/ 7/16" OSB FLITCH PLATE. NAIL BEAM TOGETHER USING (2) ROWS OF 12d NAILS @ 12" O.C. TYP EACH SIDE.	CONNECTION: PROVIDE (2) SIMPSON LSTA18 OR (2) SIMPSON HTS20 TO WOOD POST OR (2) SIMPSON HETA16 TO CMU COL. U.N.O. ON ROOF PLAN.
BM2	(2) - 2 x 10 #2 SYP W/ 7/16" OSB FLITCH PLATE. NAIL BEAM TOGETHER USING (2) ROWS OF 12d NAILS @ 12" O.C. TYP EACH SIDE	CONNECTION: PROVIDE (2) SIMPSON LSTA24 OR (2) SIMPSON HTS20 TO WOOD POST OR (2) SIMPSON HETA16 TO CMU COL. U.N.O. ON ROOF PLAN.
BM3	(2) - 2 x 12 #2 SYP W/ 7/16" OSB FLITCH PLATE. NAIL BEAM TOGETHER USING (2) ROWS OF 12d NAILS @ 12" O.C. TYP EACH SIDE.	CONNECTION: PROVIDE (2) SIMPSON LSTA24 OR (2) SIMPSON HTS20 TO WOOD POST OR (2) SIMPSON HETA16 TO CMU COL. U.N.O. ON ROOF PLAN.
BM4	(2) - 1 3/4" x 11 1/4" LVL 2.0E Fb=2600 PSI. NAIL BEAM TOGETHER USING (2) ROWS 1/4" x 3 1/2" SDS WOOD SCREWS @ 16" O.C. TYP. EACH SIDE.	CONNECTION: PROVIDE (2) SIMPSON LSTA24 OR (2) SIMPSON HTS20 TO WOOD POST OR (2) SIMPSON HETA16 TO CMU COL. U.N.O. ON ROOF PLAN.
BM5	(2) - 1 3/4" x 11 7/8" LVL 2.0E Fb=2600 PSI. NAIL BEAM TOGETHER USING (2) ROWS 1/4" x 3 1/2" SDS WOOD SCREWS @ 16" O.C. TYP. EACH SIDE.	CONNECTION: PROVIDE (2) SIMPSON LSTA24 OR (2) SIMPSON HTS20 TO WOOD POST OR (2) SIMPSON HETA16 TO CMU COL. U.N.O. ON ROOF PLAN.
BM6	(2) - 1 3/4" x 16" LVL 2.0E Fb=2600 PSI. NAIL BEAM TOGETHER USING (2) ROWS 1/4" x 3 1/2" SDS WOOD SCREWS @ 16" O.C. TYP. EACH SIDE	CONNECTION: PROVIDE (2) SIMPSON LSTA24 OR (2) SIMPSON HTS20 TO WOOD POST OR (2) SIMPSON HETA16 TO CMU COL. U.N.O. ON ROOF PLAN.

GENERAL BEAM NOTES

1. VERIFY WITH PLAN CORRECT LENGTH OF BEAMS REQUIRED (MIN. 4" BEARING EACH END)
2. SEE PLAN FOR TOP OR BOTTOM OF BEAM INDICATIONS
3. BEAMS ARE NOT TO BE DRILLED OR NOTCHED IN ANY WAY WITHOUT WRITTEN APPROVAL FROM THE E.O.R.

HEADER SCHEDULE

IF USED. SEE DET. "HDR" ON SHEET S-2 FOR ENERGY STAR INSULATION ON HEADERS)

MARK	HEADER SIZE	REMARKS
H1	(2) - 2X6 #2 SYP W/ 1/2" FLITCH PLATE	SEE GENERAL HEADER NOTE #5 THIS SHEET
H2	(2) - 2X8 #2 SYP W/ 1/2" FLITCH PLATE	SEE GENERAL HEADER NOTE #5 THIS SHEET
H3	(2) - 2X10 #2 SYP W/ 1/2" FLITCH PLATE	SEE GENERAL HEADER NOTE #5 THIS SHEET
H4	(2) - 2X12 #2 SYP W/ 1/2" FLITCH PLATE	SEE GENERAL HEADER NOTE #5 THIS SHEET
H5	(2) - 1 3/4" X 11 1/4 LVL 2.0E Fb=2600 PSI	ATTACH TOGETHER W/ (2) ROWS 1/4" X 3 1/2" SDS WD SCREWS @ 16" O.C. TYP. EACH SIDE
H6	(2) - 1 3/4" X 9 1/4 LVL 2.0E Fb=2600 PSI	ATTACH TOGETHER W/ (3) ROWS 1/4" X 3 1/2" SDS WD SCREWS @ 16" O.C. TYP. EACH SIDE

HEADER SUPPORT NO. OF JACKS & STUDS REQ. AT OPENINGS

OPENING SIZE	2x4 WALL JACKS EA. END	2x4 WALL KINGS EA. END	2x6 OR 2x8 WALL JACKS EA. END	2x6 OR 2x8 WALL KINGS EA. END
1'-0" - 3'-11"	(1)	(2)	(1)	(2)
4'-0" - 9'-11"	(2)	(3)	(2)	(2)
10'-0" - 16'-0"	(3)	(4)	(3)	(4)

GENERAL HEADER NOTES

1. VERIFY W/ PLAN CORRECT LENGTH OF HEADER REQUIRED
2. IF HEADER IS ON THE 1st FLOOR SEE PLAN FOR BEARING WALL TYPE AND FOLLOW INSTRUCTIONS WITHIN BEARING WALL SCHEDULE FOR REQUIRED CORRECTIONS UNO ON PLAN
3. IF HEADER IS ON THE 2nd FLOOR SEE PLAN FOR INDICATED HEADER CONNECTION FOR REQUIRED CONNECTIONS.
4. ALL HEADER JACK AND KING STUDS SHALL BE FASTENED TO EACH PER DETAIL WF37.
5. FASTEN ALL MULT-PLY HEADERS TOGETHER W/ (2) ROWS 12d COMMON NAILS AT 12" o.c. ALONG EACH EDGE OF (3) ROWS IF 2x10 OR LARGER.
6. FASTEN ALL HEADERS TO KING STUDS WITH (3) 12d TOENAILS PER SIDE
7. IF HEADER IS NOT SPECIFIED CONTACT E.O.R.

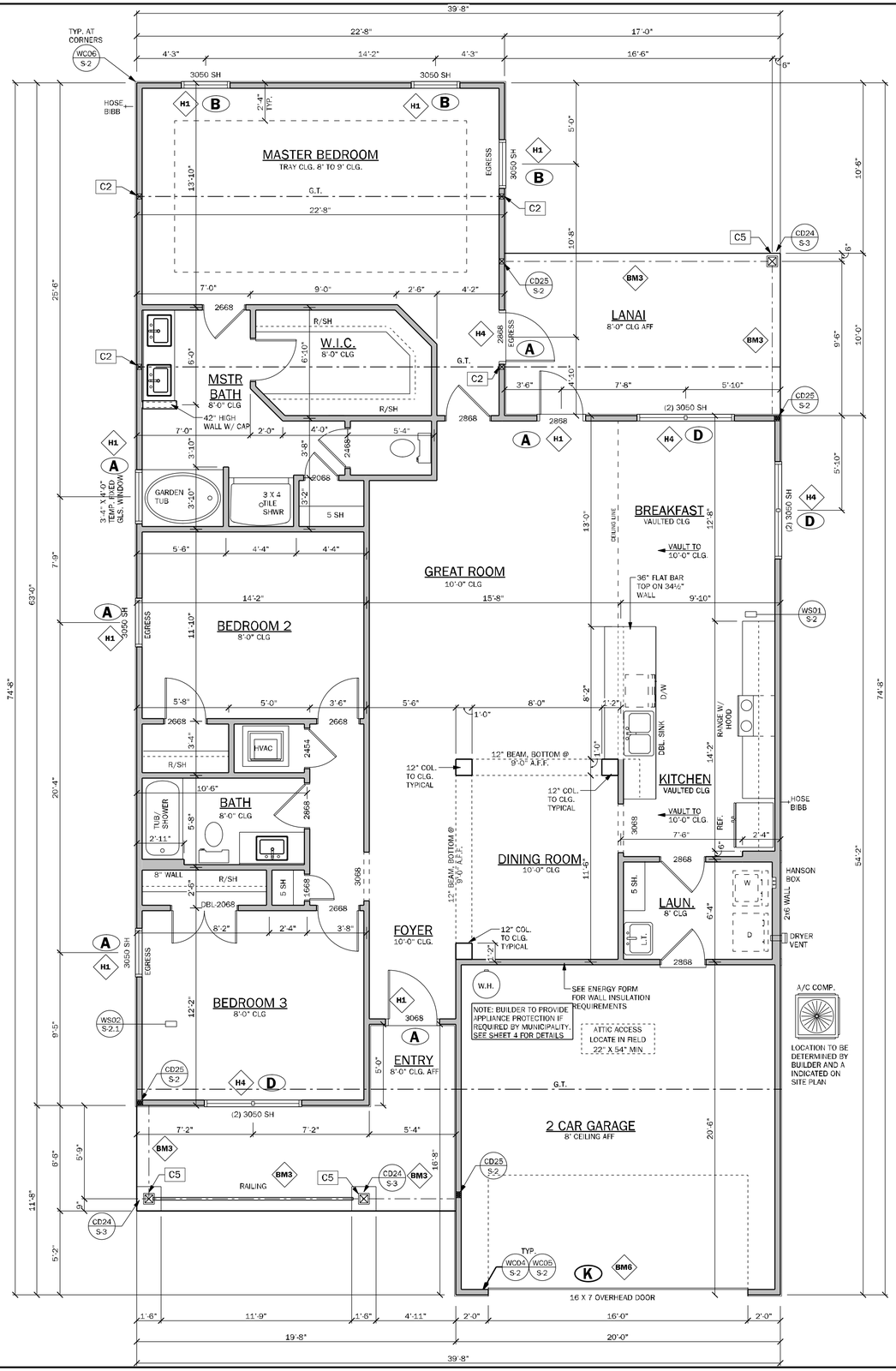

FLOOR PLAN
SCALE: 1/4" = 1'-0"
ELEVATION "C"

NOTE:
INDICATES OPENINGS WIND PRESSURES. SEE WIND LOADING CRITERIA ON COVER SHEET FOR INFORMATION.

WALL LEGEND

- FRAMED WALL
- BEARING FRAME WALL
- FRAMED WALL W/ BRICK VENEER
- FRAMED WALL W/ SIDING OR STUCCO

GENERAL NOTES

1. R302.6 (table 302.6) If water based ceiling texture material is used, Provide ½" gypsum board for 16" O.C. Framing, or 5/8" gypsum board for 24" O.C. Framing. Note ½" sag-resistant gypsum board may be used i.L.O. 5/8" gypsum board. 5/8" type "X" gypsum board must be installed on garage ceiling beneath habitable room(s).
2. R302.5.2 Duct Penetration. Ducts in the garage and ducts penetrating the walls or ceilings separating the dwelling from the garage shall be constructed of a minimum No. 26 gage (0.48 mm) sheet steel, 1 inch minimum rigid nonmetallic class 0 or class 1 duct board, or other approved material and shall not have openings into the garage.
3. R302.5.1 Door from garage into house must be a minimum 1 3/8" solid wood door, solid or honeycombcore steel door, or 20 Minute fire rated door.
4. R302.7 Enclosed space under stairs that is accessed by a door or access panel shall have walls, under-stair surface and any soffits protected on the enclosed side with 1/2" gypsum board.
5. Outdoor swimming pools shall be provided with a barrier complying with R4501.17.1.1 through R4501.17.1.14.
6. Bathroom exhaust fans must vent to the exterior of the building, exhaust to attic space and soffits is not acceptable. Ventilation shall be permitted to exit through the soffit if solid soffit is installed 5'-0" on each side of the venting.
7. R302.6 The garage shall be separated from the residence and it's attic as required by Table R302.6 From the residence and attics by not less than 1/2-inch (12.7mm) gypsum board applied to the garage side. Garage beneath rooms shall be separated from all habitable rooms above by not less than 5/8 inch (15.9mm) type X gypsum board or equivalent. Where the separation is a floor-ceiling assembly, the structure supporting the separation shall also protected by not less than 1/2 inch (12.7mm) gypsum board or equivalent.
8. R312.2.1Window sills. In dwelling units, where the bottom of the clear opening of an operable window opening is located less than 24 inches (610 mm) above the finished floor and greater than 72 inches (1829 mm) above the finished grade or other surface below on the exterior of the building, the operable window shall comply with one of the following:
   1. Operable windows with openings that will not allow a 4-inch diameter (102 mm) sphere to pass through the opening where the opening is in its largest opened position.
   2. Operable windows that are provided with window fall prevention devices that comply with ASTM F2090.
   3. Operable windows that are provided with window opening control devices that comply with Section R312.2.2.
9. R308.4.2 All windows within 2'-0" of doors and in shower or tub areas will be safety tempered glass.
10. EC: R402.2.4 Vertical or horizontal access doors from conditioned spaces to unconditioned spaces such as attics and crawl spaces shall be weatherstripped and insulated to a level equivalent to the insulation on the surrounding surfaces
11. M1502.4.5 Duct length
    The maximum allowable exhaust duct length shall be determined by one of the methods specified in sections M1502.4.5.1 through M1502.4.5.3
    M1502.3 Duct termination.
    Exhaust ducts shall terminate on the outside of the building. Exhaust duct terminations shall be in accordance with the dryer manufacturer's installation instructions. If the manufacturer's instructions do not specify a termination location, the exhaust duct shall terminate not less than 3 feet (914 mm) in any direction from openings into buildings, including openings in ventilated soffits. Exhaust duct terminations shall be equipped with a backdraft damper. Screens shall not be installed at the duct termination.
12. Porch Ceilings: (See plan for the following options)
    Option 1. Gypsum:
    ½" exterior gypsum soffit board shall be attached to all framing members with 2x blocking provided at perimeter and panel edges.
    The gypsum board shall be attached w/ Type "W" 1¼" drywall screws at 8" O.C. in filed and edges.
    Option 2. Plaster Base:
    7/16" OSB on underside of roof trusses shall be attached to all framing members with 2x blocking provided at perimeter and panel edges. The OSB shall be attached w/ 8d nails at 6" O.C. field and 4" O.C. at edges or 7d screw shank 3" O.C. field and 4" edges.
13. Energy Code Compliance Path is Performance Based Path. Code cycle is FBC 2023 6th Edition.

* ALL INTERIOR AND EXTERIOR WALL FRAMING, INCLUDING FURRING STRIPS ON CMU WALLS, TO BE SPACED AND 16" O.C. (U.N.O.)

AREA CALCULATIONS

LIVING	1952 S.F.
GARAGE	406 S.F.
COVERED ENTRY	145 S.F.
COVERED PATIO/LANAI	170 S.F.
TOTAL AREA UNDER ROOF	2673 S.F.

TSG
CA No. 9161 AA26003115
Making Dreams Come True
TOTAL SOLUTIONS GROUP
258 Southhall Lane, Suite 200
Maitland, Florida, 32751
(407) 800-2333
CARL A. BROWN, PE - FL # 56126
SCOTT LEWKOWSKI, PE - FL #78750
100% Employee Owned
myTSGhome.com

ABD ATA fhba GO BA

MUNICIPAL STAMP AREA

SIGNATURE & SEAL
7/30/2025
CARL A. BROWN LICENSE No 56126 STATE OF FLORIDA PROFESSIONAL ENGINEER

To the best of the Engineer's knowledge, information and belief, the structural plans are specificat ons contain within these drawings comply with the 2023 Florida Building Code- Residential 8th Edition. Engineer's signature and seal is only for the structura engineering portions of the drawing pages bearing engineer's signature and seal.

ADAMS HOMES
FLORIDA CONTRACTORS LICENSE NO. CRC1330146
100 WEST GARDEN STREET
PENSACOLA FL 32502
Builder:
Division Location: GAINESVILLE

LOT: 38 BLK: UNIT:
Community: The Preserve at Laurel Lake
Plan Name: 1970
Project Address: 561 SW Bellflower Dr. Lake City, FL
Client No.:

Project No: 25-07823
Sheet No: 2
FLOOR PLAN

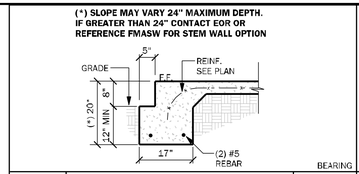

FM01	SINGLE STORY FTG	1/2" = 1'-0"

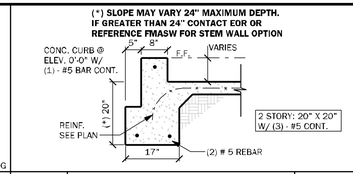

FM02	SECTION @ GARAGE	1/2" = 1'-0"

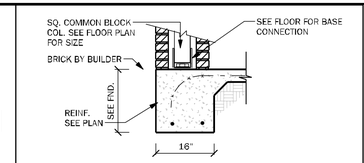

FM25	PORCH COLUMN W/ BRICK	1/2" = 1'-0"

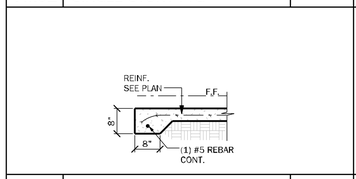

FM03	THICKENED EDGE	1/2" = 1'-0"

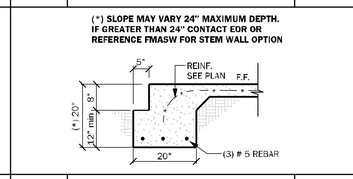

FM08	2-STORY FTG.	1/2" = 1'-0"

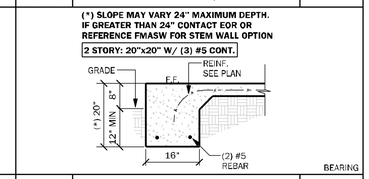

FM01A	SINGLE STORY FTG	1/2" = 1'-0"

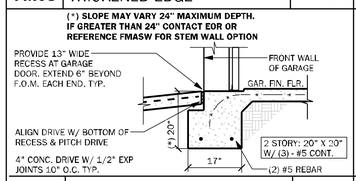

FM09	SECTION @ GAR. DOOR	1/2" = 1'-0"

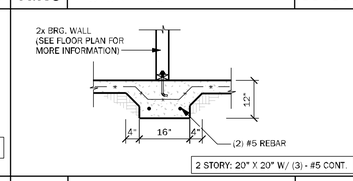

FM10	INTERIOR BRG WALL	1/2" = 1'-0"

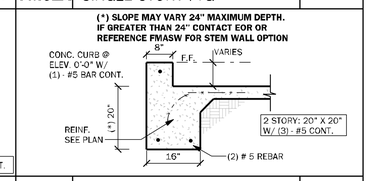

FM02A	SECTION @ GARAGE	1/2" = 1'-0"

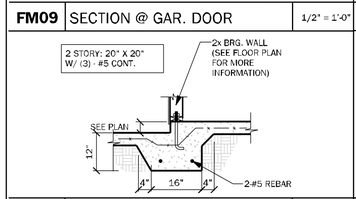

FM11	STEP DOWN BRG.	1/2" = 1'-0"

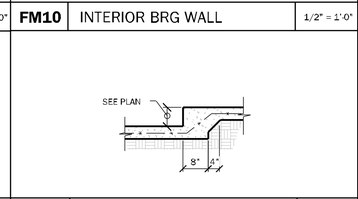

FM12	STEP DOWN NON BRG.	1/2" = 1'-0"

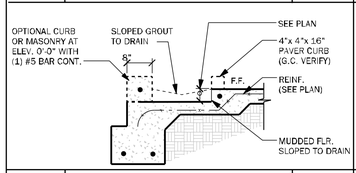

FM14	SECTION @ RECESS SHOWER	1/2" = 1'-0"

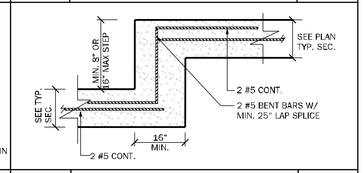

FM18	TYP. STEP FTG. DETAIL	1/2" = 1'-0"

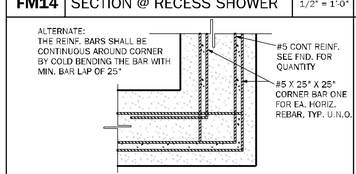

FM19	TYP. CORNER BAR DETAIL	1-1/2" = 1'-0"

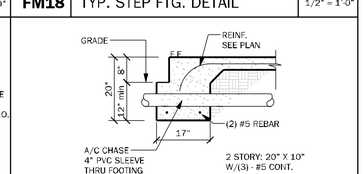

FM23	TYP. FND PENETRATION	1/2" = 1'-0"

STEMWALL SCHEDULE

STEMWALL HEIGHT (h)	FOOTING DIMENSION				NUMBER/SIZE OF BARS	LAT.	MAXIMUM F.C. SPACING (O.C.) IN STEM WALL
	d 1 STORY	d 2 STORY	b 1 STORY	b 2 STORY			
0'-0"-2'-0"	8"	10"	16"	20"	W/ (2) #5 BARS	<674#	6'-8"
>2'-0"-3'-4"	10"	10"	20"	24"	W/ (3) #5 BARS	674#	5'-4"
>3'-4" - 4'-0"	12"	12"	32"	32"	W/ (4) #5 BARS	845#	4'-0"
>4'-0" - 5'-4"	16"	16"	48"	48"	W/ (5) #5 BARS CONT. & #5 @ 18" O.C. TRANSV.	1162#	2'-8"

SEE FOUNDATION PLAN FOR F.C. SPACING ABOVE SLAB LEVEL

NOTES:

1. VERTICAL REINF. IN SOLID GROUTED CELLS AT ALL CORNERS, JAMBS, WALL INTERSECTIONS, BELOW GIRDER TRUSS LOCATIONS, AND AT THE MAXIMUM SPACING STATED IN SCHEDULE
2. W.W.M. IS REQUIRED TO MAKE ADEQUATE CONNECTION BETWEEN SLAB AND WALL WHEN STEM WALL EXCEEDS 4'-0" FIBERMESH CAN NOT BE USED AND #4 TURN BARS ARE REQUIRED @ EACH FILLED CELL LOCATION. EACH BAR TO TIE INTO VERTICAL BAR AND EXTEND OUT A MIN. 4'-0" INTO SLAB / STEM
3. IF STEM IS REQ'D TO BE HIGHER CONTACT ENGINEER OF RECORD PRIOR TO CONSTRUCTION FOR MORE INFORMATION
4. G.C. TO PROVIDE ADEQUATE BRACING OF STEM WALL WHEN UNEVEN BACK FILLING IS TAKING PLACE
5. #5 HORIZONTAL CORNER BARS WITH 4'-0" LEGS IN KNOCKOUT BLOCK @ 16" O.C. VERTICAL. GROUTED SOLID WHEN STEM WALL IS GREATER THAN 4'-0" TALL (TYPICAL ALL CORNERS)
6. IF STEMWALL IS WITH IN 5'-0" OF POOL OR WATER FEATURE FOUNDATIONS TO BE A MINIMUM 12" BELOW BOTTOM OF POOL OR WATER FEATURE.
7. ALL STEM WALLS GREATER THAN (4) COURSES SHALL BE FULLY GROUTED.
8. R.403.1.4 MINIMUM DEPTH: ALL EXTERIOR FOOTINGS (BOTTOM) SHALL BE PLACED AT LEAST 12" BELOW THE UNDISTURBED GROUND SURFACE.

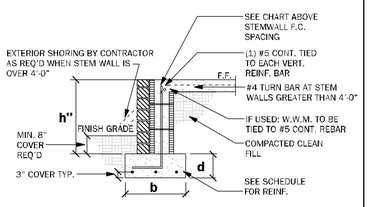

FMASW	ALTERNATE STEM WALL FOOTING SCHEDULE	1/2" = 1'-0"

GENERAL FOUNDATION NOTES (U.N.O.)

1. PROVIDE MIN. 6 MIL. APPROVED VAPOR BARRIER. ALL JOINTS TO BE LAPPED MIN. 6" AND SEALED.
2. 4" 2500 PSI CONC. SLAB W/ 6X6 W1.4 x W1.4 OR FIBERMESH /FIBERMIX ADDED TO THE CONCRETE. IN ACCORDANCE W/ MANUF'S INSTRUCTIONS AND NER-284 FOR FIBERMESH OR NER-414 FOR FIBERMIX. OVER 6 MIL VISQUEEN VAPOR BARRIER. GC SHALL PROVIDE APPROVED SOIL OR BORATE TERMIT TREATMENT.
3. ■ INDICATES FILLED CELL W/3000 PSI CONC. FROM FTR. TO BEAM W/ (1) #5 REBAR TYPICAL ABOVE SLAB. HOOKED FTG. DOWELS 17" EMBEDMENT W/ 30" EXT. ABOVE SLAB.
4. CONSULT W/ MANUF. SPECIFICATIONS PRIOR TO FOURING OR RECESSING DOOR SILLS OR SLIDING GLASS DOOR SILLS.
5. EXTERIOR SLABS SHALL SLOPE MIN. 2% OR 1/4" PER FOOT AWAY FROM HOUSE U.N.O. ON PLAN.
6. CONTROL JOINTS (IF SHOWN) ARE NOT REQUIRED BY CODE BUT ARE SUGGESTED (ESPECIALLY WHEN USING FIBER REINF. CONCRETE OR IN EXTERIOR CONDITIONS). CONTROL JOINTS TO BE 1/8" SAW CUT A DEPTH OF 1/4 OF THE THICKNESS OF THE SLAB AND SPACED MAX. 10' APART. FILL CUT W/ APPROVED JOINT MATERIAL OR USE ALTERNATE APPROVED METHOD.
7. NO WOOD STAKES PERMITTED IN FOUNDATION.
8. PENDING SITE CONDITIONS, FOUNDATION MAY HAVE TO BE STEPPED DOWN. G.C. TO DETERMINE STEP LOCATIONS IF REQUIRED.
9. R403.1.4 MINIMUM DEPTH. EXTERIOR FOOTINGS SHALL BE PLACED NOT LESS THAN 12 INCHES BELOW THE FINISHED GRADE OF GROUND SURFACE WHERE APPLICABLE. THE DEPTH OF FOOTINGS SHALL ALSO CONFORM TO SECTION R403.1.4.1.
10. MASON TO COORDINATE WITH BUILDER ANY ELECTRICAL REQUIREMENT THROUGH SLAB
11. PROVIDE 4" STEPDOWN TO SIDEWALK FROM ENTRY
12. ASSUMED ALLOWABLE SOIL BEARING PRESSURE AFTER COMPACTION: 2000 PSF SEE SOILS REPORT AND SPECIFICATIONS FOR COMPACTION REQUIREMENTS IF SOIL CONDITIONS IN THE PROJECT DO NOT MEET OR EXCEED THE CAPACITY THE GENERAL CONTRACTOR SHALL CONTACT THE ENGINEER PRIOR TO FOUNDATION POUR FOR VERIFICATION OF FOUNDATION DESIGN. SOIL TO BE COMPACTED TO AT LEAST 98% OF MAX. DRY DENSITY AS DETERMINED BY ASTM - 1557 (MODIFIED PROCTOR) THE FOUNDATION SIZES INDICATED ON THE FOUNDATION PLAN HAS BEEN DESIGNED FOR A MINIMUM SOIL BEARING CAPACITY OF 2000 PSF.

FOOTING SCHEDULE

MARK	SIZE	DEPTH	REINFORCING	GRAVITY CAP. (lbs)
F1.0	1'-0" X CONT.	1'-0"	2 #5 E.W. BOT.	2000
F2.0	2'-0" X 2'-0"	1'-0"	3 #5 E.W. BOT.	7700
F2.5	2'-6" X 2'-6"	1'-0"	3 #5 E.W. BOT.	11000
F3.0	3'-0" X 3'-0"	1'-0"	4 #5 E.W. BOT.	15600
F3.5	3'-6" X 3'-6"	1'-0"	4 #5 E.W. BOT.	21500
F4.0	4'-0" X 4'-0"	1'-0"	5 #5 E.W. BOT.	28000
F4.5	4'-6" X 4'-6"	1'-4"	5 #5 E.W. BOT.	34500
F5.0	5'-0" X 5'-0"	1'-4"	6 #5 E.W. BOT.	42500
F6.0	6'-0" X 6'-0"	1'-4"	7 #5 E.W. BOT.	61500

LEGEND

- INDICATES SINGLE-STORY FOOTING
- INDICATES TWO-STORY FOOTING
- INDICATES PAD FOOTING

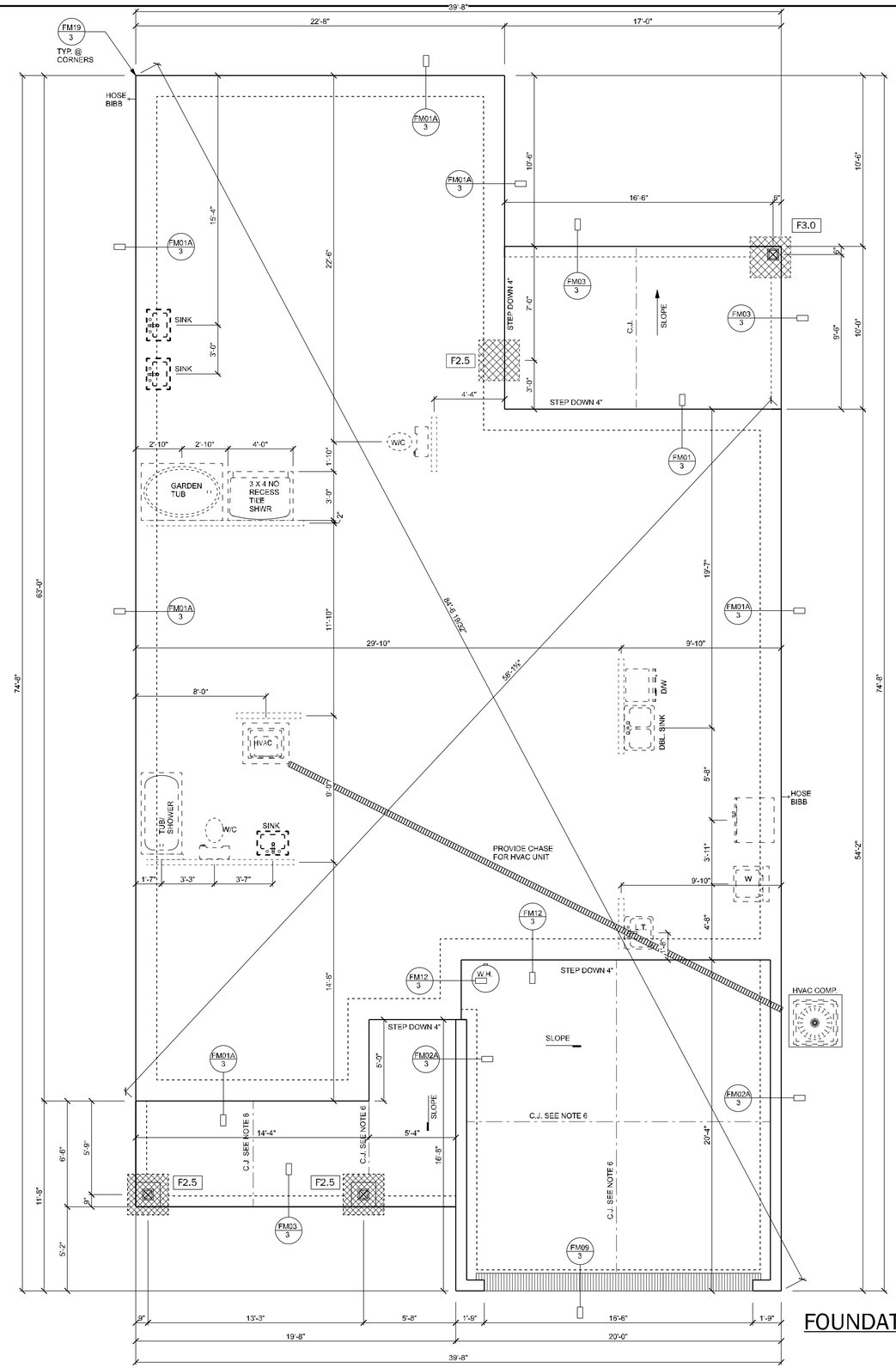

FOUNDATION PLAN

SCALE: 1/4" = 1'-0"

ELEVATION "C"

TSG
CA No: 9161
AA26003115
Making Dreams Come True
TOTAL SOLUTIONS GROUP
258 Southhall Lane, Suite 200
Maitland, Florida, 32751
(407) 800-2333
CARL A. BROWN, PE - FL # 56126
SCOTT LEWKOWSKI, PE - FL #78750
100% Employee Owned
myTSGhome.com

MUNICIPAL STAMP AREA

SIGNATURE & SEAL
7/30/2025

CARL A. BROWN LICENSE No 56126 STATE OF FLORIDA PROFESSIONAL ENGINEER

To the best of the Engineer's knowledge, information and belief, the structural plans and specifications contain within these drawings comply with the 2023 Florida Building Code- Residential 8th Edition. Engineer's signature and seal is only for the structural engineering portions of the drawing pages bearing engineer's signature and seal.

Builder: ADAMS HOMES
FLORIDA CONTRACTORS LICENSE NO. CRC1330146
100 WEST GARDEN STREET
PENSACOLA FL 32502
Division Location: GAINESVILLE

LOT: 38
BLK:
UNIT:
Community: The Preserve at Laurel Lake
Plan Name: 1970
Project Address: 581 SW Bellflower Dr. Lake City, FL
Client No.:

Project No: 25-07823
Sheet No: 3
FOUNDATION PLAN

LOAD CALCULATIONS

COOLING GREATER THAN HEATING

GENERAL LIGHTING & RECEPTACLES

3 WATTS PER SQUARE FOOT OF LIVING
(THIS FORMULA ALLOWS FOR CEILING FAN CIRCUITS)

S.F. LIVING = 1,970 x 3
= 5,910

APPLIANCE CIRCUITS

RANGE	8500
OVEN	NONE
MICRO / HOOD	1000
WATER HEATER	4500
WHIRL POOL	1250
WASHER	1500
DRYER	5000
DISHWASHER	1500
DISPOSAL	600
SMALL APPLIANCE CIRCUITS (3)	4500
BATH FANS (100 WATTS / EACH)	400
GEN LIGHT'G & RECEPT. + APP. CIR.	= 34,460
SUBTRACT 100 % OF FIRST 10,000	10,000
	A = 24,460

HVAC CIRCUITS

A/C (AIR HANDLER & COMP.)	10,000
A/C (AUXILIARY HEAT STRIP)	10,000
	B = 20,000

CIRCUIT CALCULATIONS

FIRST 10,000 AMPS @ 100%	= 10,000
+ 40% OF "A" = (.40 x 24,460)	= 9,784
+ 100% OF "B" = (20,000)	= 20,000
TOTAL WATTAGE	= 39,784
WATTS DIVIDED BY 240 = AMPS	
CALCULATED SERVICE AMPS	= 166

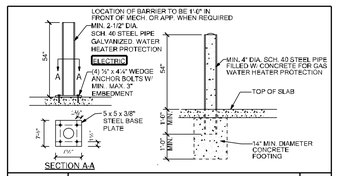

FM24 PROTECTION BARRIER N.T.S.

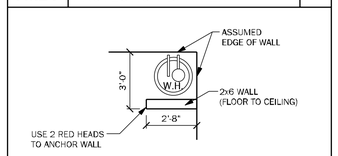

FM24.1 ALTERNATIVE PROTECTION BARRIER N.T.S.

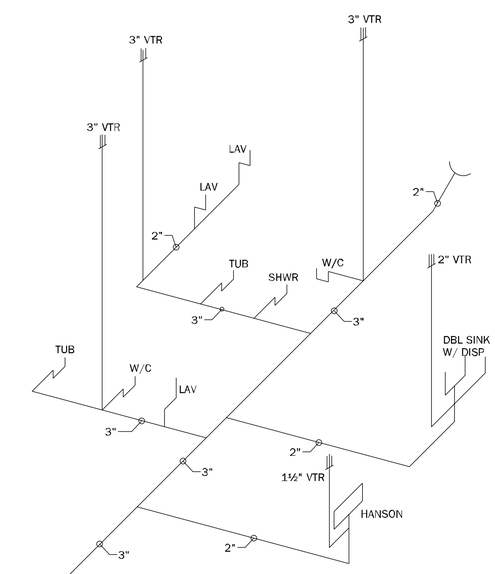

PLUMBING RISER

NOTE: THIS IS A SCHEMATIC DRAWING ONLY LICENSED PLUMBER TO PROVIDE AND OR MODIFY FINAL PLUMBING RISER TO COMPLY WITH CURRENT CODE

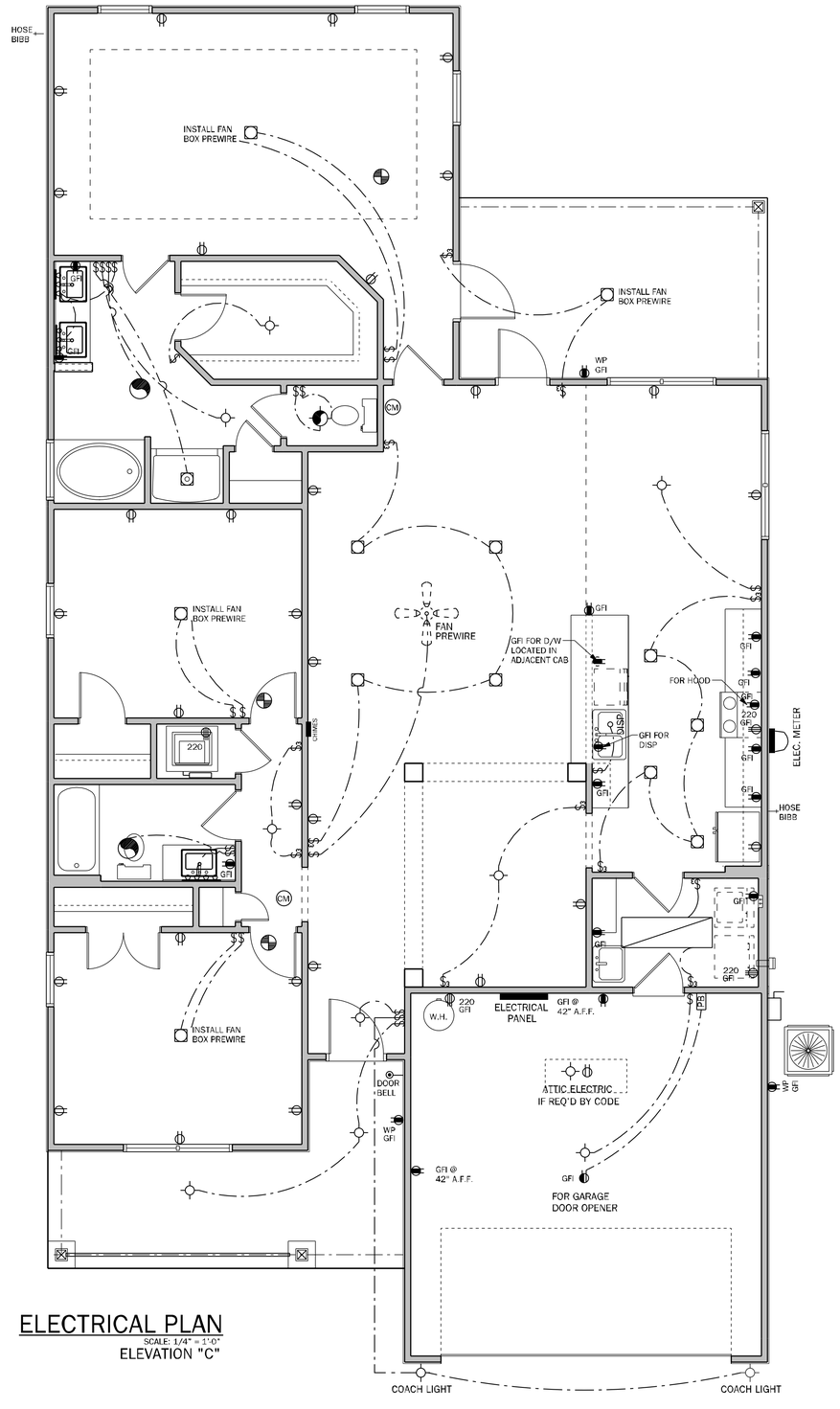

ELECTRICAL PLAN

SCALE: 1/4" = 1'-0"
ELEVATION "C"

ELECTRICAL NOTES: UNLESS OTHERWISE NOTED.

1. ELECTRICAL OUTLET HEIGHTS AS MEASURED FROM FINISHED FLOOR TO CENTER LINE OF THE BOX TO BE: 16" AFF (GENERAL). IN A FLOOD ZONE, ALL ELECTRICAL EQUIPMENT TO BE AT OR ABOVE DFE.
KITCHEN 44" AFF
BATHROOM 39" AFF
LAUNDRY ROOM 36" AFF
EXTERIOR WATERPROOF 12" AFF
GARAGE — GENERAL PURPOSE 42" AFF
RANGE 2" AFF
2. ALL TRIM PLATES AND DEVICES TO BE GANGED, WHERE POSSIBLE.
3. ELECTRICAL SWITCHES TO BE AT 42" CENTERLINE ABOVE FINISHED FLOOR.
4. ELECTRICAL PLAN IS INTENDED FOR BID PURPOSES ONLY. ALL WORK SHALL BE DONE IN STRICT ACCORDANCE WITH THE NATIONAL ELECTRIC CODE (NEC), LATEST EDITION. BY A LICENSED ELECTRICAL CONTRACTOR WHO SHALL BE RESPONSIBLE FOR THE INSTALLATION & SIZING OF ALL ELECTRICAL, WIRING & ACCESSORIES.
5. SMOKE ALARMS SHALL COMPLY WITH NFPA 72 AND SECTION R314 AND SHALL BE LISTED IN ACCORDANCE WITH UL 217. COMBINATION SMOKE AND CARBON MONOXIDE ALARMS SHALL BE LISTED IN ACCORDANCE WITH UL 217 AND UL 2034.
6. PROVIDE AFCI S (ARC-FAULT CIRCUIT INTERRUPTERS) COMBINATION TYPE INSTALLED TO PROVIDE PROTECTION OF THE BRANCH CIRCUITS IN ALL DWELLING UNITS PER NFPA 70 (CURRENT EDITION) AND THE NEC AND AS DEFINED IN UL 1699.
7. PROVIDE TAMPER RESISTANT RECEPTACLES AS REQUIRED BY THE NFPA 70 (CURRENT EDITION).
8. CARBON MONOXIDE PROTECTION: CARBON MONOXIDE ALARMS OR DETECTORS SHALL BE INSTALLED IN ALL DWELLING UNITS IN ACCORDANCE WITH FBC R315 AND NFPA 70. SUCH DEVICES SHALL BE LISTED BY THE APPROPRIATE STANDARD, EITHER ANSI/UL 2034, STANDARD FOR SINGLE AND MULTIPLE STATION CO ALARMS OR UL 2075, GAS AND VAPOR DETECTOR SENSOR, ACCORDING TO THE INSTALLATION.
9. R315.1.2 COMBINATION ALARMS: COMBINATION SMOKE/CARBON MONOXIDE ALARMS SHALL BE LISTED AND LABELED BY A NATIONALLY RECOGNIZED TESTING LABORATORY.
10. KEEP ALL SMOKE DETECTORS MINIMUM OF 36" FROM BATHROOM DOORS.
11. IN NEW CONSTRUCTION, SMOKE DETECTORS SHALL BE HARDWIRED INTO AN A/C ELECTRICAL POWER SOURCE AND SHALL BE EQUIPPED WITH A MONITORED BATTERY BACKUP.
12. BATHROOM EXHAUST FANS MUST VENT TO THE EXTERIOR OF THE BUILDING, VENTILATION TO ATTIC SPACE AND SOFFITS IS NOT ACCEPTABLE.
13. CHAPTER 45 PRIVATE SWIMMING POOLS — OUTDOOR SWIMMING POOLS SHALL BE PROVIDED WITH A BARRIER COMPLYING WITH R4501.17.1.1 THROUGH R4501.17.1.14.
14. ADD GFCI PROTECTION TO RECEPTACLES IN LAUNDRY ROOMS AND UTILITY ROOMS OF DWELLINGS WHERE INSTALLED WITHIN 6' OF THE OUTSIDE EDGE OF A SINK. THIS WOULD INCLUDE THE RECEPTACLE INSTALLED FOR A WASHING MACHINE. RECEPTACLE OUTLETS SHALL NOT BE REQUIRED ON A WALL DIRECTLY BEHIND A RANGE OR SINK TO FULFILL THE REQUIREMENT OF AN OUTLET EVERY 24". THE WIDTH OF THE SINK OR RANGE IS NOT TO BE INCLUDED IN THE SPACING OF THE OUTLETS UNLESS THE DISTANCE FROM THE SINK OR RANGE IS GREATER THAN 12" FOR STRAIGHT COUNTER TOPS AND 18" FOR SINKS AND RANGES INSTALLED IN CORNER COUNTERS.
15. WHERE MORE THAN ONE SMOKE ALARM IS REQUIRED TO BE INSTALLED WITHIN AN INDIVIDUAL DWELLING UNIT IN ACCORDANCE WITH SECTION R314.3, THE ALARM DEVICES SHALL BE INTERCONNECTED IN SUCH A MANNER THAT THE ACTUATION OF ONE ALARM WILL ACTIVATE ALL OF THE ALARMS IN THE INDIVIDUAL DWELLING UNIT. PHYSICAL INTERCONNECTION OF SMOKE ALARMS SHALL NOT BE REQUIRED WHERE LISTED WIRELESS ALARMS ARE INSTALLED AND ALL ALARMS SOUND UPON ACTIVATION OF ONE ALARM.
16. FOR ONE- AND TWO-FAMILY DWELLING UNITS, ALL SERVICE CONDUCTORS SHALL TERMINATE IN DISCONNECTING MEANS HAVING A SHORT-CIRCUIT CURRENT RATING EQUAL TO OR GREATER THAN THE AVAILABLE FAULT CURRENT, INSTALLED IN A READILY ACCESSIBLE OUTDOOR LOCATION. EACH DISCONNECT SHALL BE ONE OF THE FOLLOWING:
(1) SERVICE DISCONNECTS MARKED AS FOLLOWS:
EMERGENCY DISCONNECT,
SERVICE DISCONNECT
(2) METER DISCONNECTS INSTALLED PER 230.82(3) AND MARKED AS FOLLOWS:
EMERGENCY DISCONNECT,
METER DISCONNECT,
NOT SERVICE EQUIPMENT
(3) OTHER LISTED DISCONNECT SWITCHES OR CIRCUIT BREAKERS ON THE SUPPLY SIDE OF EACH SERVICE DISCONNECT THAT ARE SUITABLE FOR USE AS SERVICE EQUIPMENT AND MARKED AS FOLLOWS:
EMERGENCY DISCONNECT,
NOT SERVICE EQUIPMENT
MARKINGS SHALL COMPLY WITH 110.21(B).
17. ALL PERMANENTLY INSTALLED LUMINARIES, EXCLUDING THOSE IN KITCHEN APPLIANCES, SHALL HAVE AN EFFICACY OF AT LEAST 45 LUMENS-PER-WATT OR SHALL UTILIZE LAMPS WITH AN EFFICACY OF NOT LESS THAN 65 LUMENS-PER-WATT.

ELECTRICAL LEGEND

			SMOKE DETECTOR
$	SINGLE POLE SWITCH	CM	CARBON MONOXIDE/ SMOKE DETECTOR COMBO UNIT
$2	DOUBLE POLE SWITCH		FLOOD LIGHT
$3	THREE-WAY SWITCH		FLUORESCENT LIGHTING
$4	FOUR-WAY SWITCH		TRACK LIGHTING
$DM	DIMMER SWITCH		CEILING FAN
	CEILING MOUNTED FIXTURE	CHIMES	DOOR BELL CHIMES
	SCOUNCE (WALL MOUNTED) FIXTURE		DOOR BELL
	110 VOLT DUPLEX OUTLET	DISP	DISPOSAL
	110 VOLT SPLIT SWITCHED OUTLET		DISCONNECT SWITCH
	GROUND FAULT INTERRUPT	SP	PREWIRE SPEAKER
WP	WATER PROOF W/ GROUND FAULT	J	JUNCTION BOX
	220 VOLT OUTLET	T	THERMOSTAT
	SPECIAL SERVICES OUTLET		LOW VOLTAGE LIGHTING
TV	T.V. CABLE OUTLET	I C	INTERCOM SYSTEM
	TELEPHONE CABLE OUTLET	PB	GARAGE DOOR PUSH BUTTON
R	RECESSED LIGHTING		
WP	WATER PROOF RECESSED LIGHTING		
	BATH FAN		
	BATH FAN W/ LIGHT		
	L.E.D. DISC LIGHT		

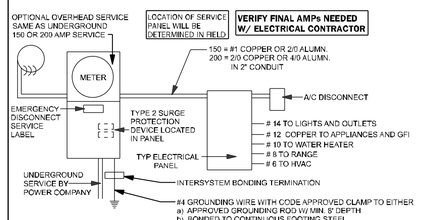

ELECTRICAL RISER

N.T.S.

NOTE:
ELECTRICAL MATERIAL AND INSTALLATIONS SHALL COMPLY WITH APPLICABLE PROVISIONS AS STATED ON STRUCTURAL NOTES SHEET LOCAL CODES AND THE LOCAL POWER CO.

TSG
CA No. 9161
AA26003115
Making Dreams Come True
TOTAL SOLUTIONS GROUP
258 Southhall Lane, Suite 200
Maitland, Florida, 32751
(407) 800-2333
CARL A. BROWN, PE - FL # 56126
SCOTT LEWKOWSKI, PE - FL #78750
100% Employee Owned
myTSGhome.com

ABD. ATA fhba GO BA

MUNICIPAL STAMP AREA

SIGNATURE & SEAL
7/30/2025

CARL A. BROWN
LICENSE
No 56126
STATE OF FLORIDA
PROFESSIONAL ENGINEER

To the best of the Engineer's knowledge, information and belief, the structural plans and specifications contain within these drawings comply with the 2023 Florida Building Code-Residential 8th Edition. Engineer's signature and seal is only for the structural engineering portions of the drawing pages bearing engineer's signature and seal.

Builder: ADAMS HOMES
FLORIDA CONTRACTORS LICENSE NO. CRC1330146
100 WEST GARDEN STREET
PENSACOLA FL 32502
Division Location: GAINESVILLE

LOT: 38	BLK:	UNIT:	
Community: The Preserve at Laurel Lake			
Plan Name: 1970			
Project Address: 561 SW Bellflower Dr Lake City, FL			
Client No.:			

Project No: 25-07823
Sheet No: **4**
ELECTRICAL PLAN

VENTILATION CALCULATION

Soffit product provides	**4.12**	**net sq in / sf**
Ridge vent provides	**18.00**	**net sq in / lf**
Off ridge vent provides	**138.00**	**net sq in / sf**
Overhang distance	**1.33**	**ft**
S.F. of Area to be vented (SF)	2672	s.f.
Total needed for exhaust for upper 1/3	641	net sq inches
Total needed for intake (soffit area, lower)	641	net sq inches
Number of Off Ridge Vents for upper 1/3 needed	5	
L.F. of Ridge Vent needed (can be used in combo with ORV)	36	
Lineal Feet of Soffit needed to meet required	117	
Lineal Feet of Soffit provided by plan	189	

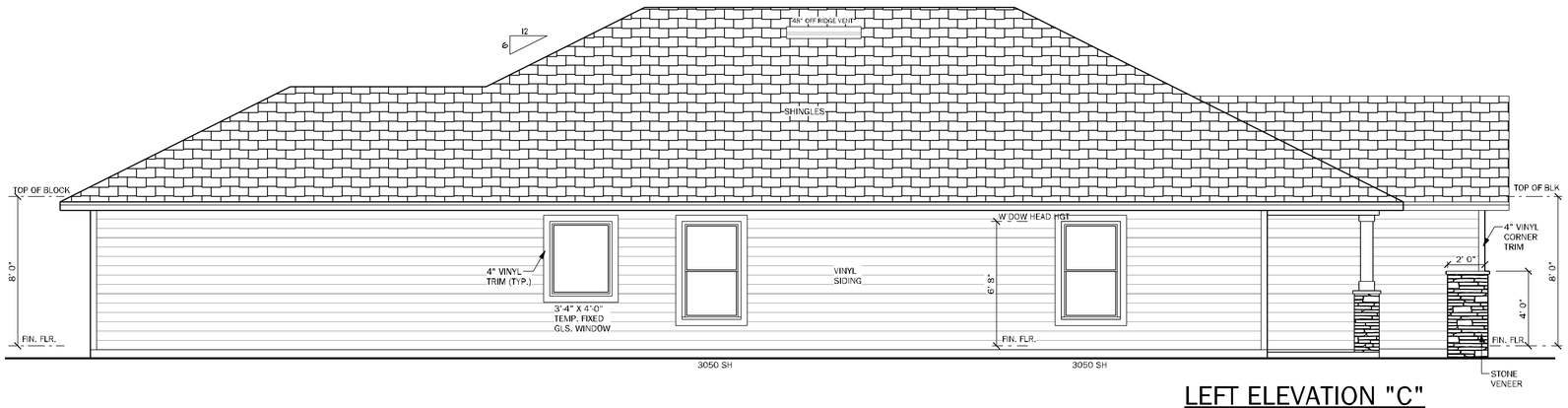

LEFT ELEVATION "C"

SCALE:1/4"=1'-0"

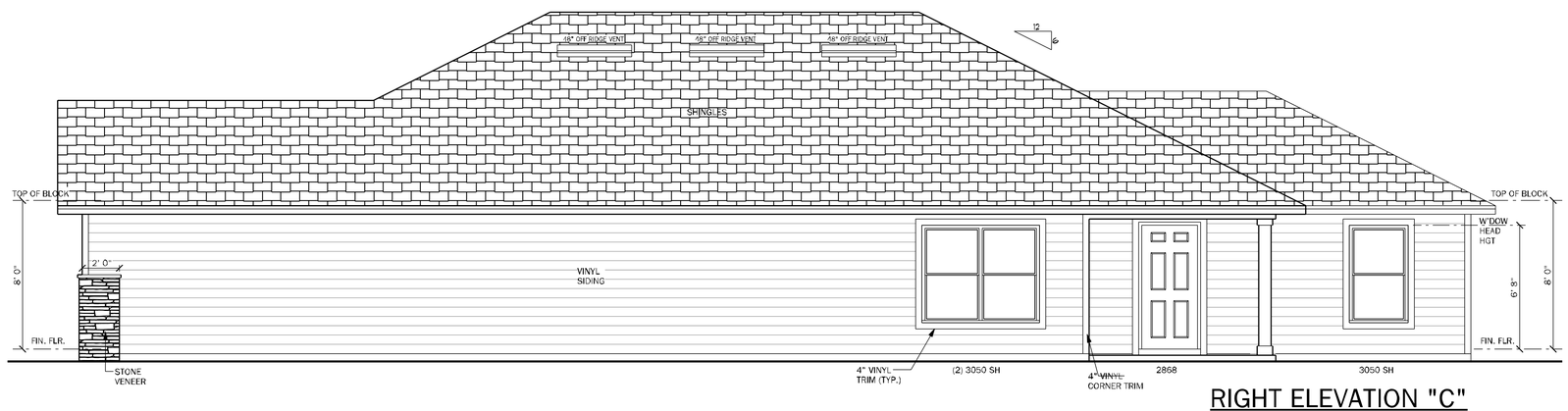

RIGHT ELEVATION "C"

SCALE:1/4"=1'-0"

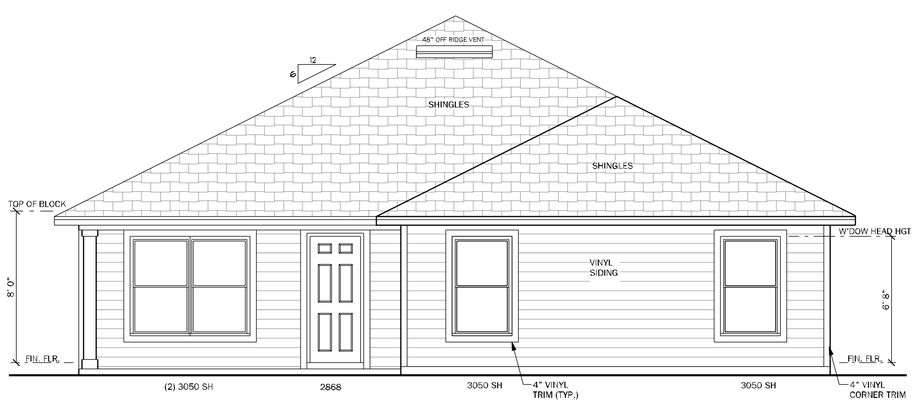

REAR ELEVATION

SCALE:1/4"=1'-0"

FRONT ELEVATION "C"

SCALE:1/4"=1'-0"

TSG
CA No: 9161
AA26003115
Making Dreams Come True
TOTAL SOLUTIONS GROUP
258 Southhall Lane, Suite 200
Maitland, Florida, 32751
(407) 800-2333
CARL A. BROWN, PE - FL # 56126
SCOTT LEWKOWSKI, PE - FL #78750
100% Employee Owned
myTSGhome.com

MUNICIPAL STAMP AREA

SIGNATURE & SEAL
7/30/2025

CARL A. BROWN LICENSE No 56126 STATE OF FLORIDA PROFESSIONAL ENGINEER

This item has been digitally signed and sealed by Carl A. Brown, P.E. on the date adjacent to the seal. Printed copies of this document are not considered signed and sealed and the signature must be verified on any electronic copies.

To the best of the Engineer's knowledge, information and belief, the structural plans and specifications contain within these drawings comply with the 2023 Florida Building Code- Residential 8th Edition. Engineer's signature and seal is only for the structural engineering portions of the drawing pages bearing engineer's signature and seal.

Builder: ADAMS HOMES
FLORIDA CONTRACTORS LICENSE NO. CRC1330146
100 WEST GARDEN STREET
PENSACOLA FL 32502
Division Location: GAINESVILLE

LOT: 38
BLK:
UNIT:
Community: The Preserve at Laurel Lake
Plan Name: 1970
Project Address: 581 SW Bellflower Dr Lake City, FL
Client No.:

Project No: 25-07823
Sheet No: 5
ELEVATION - C

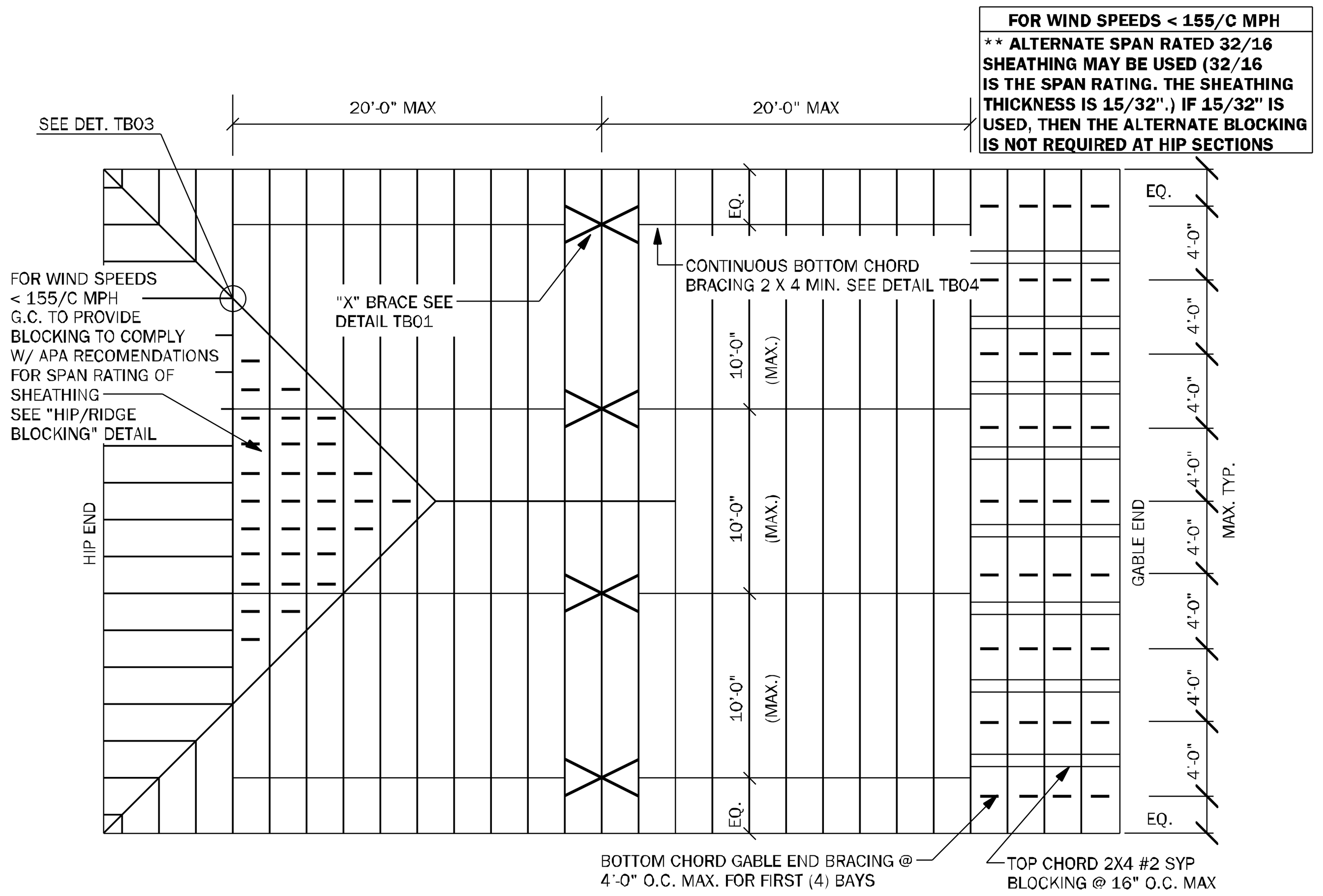

NOTE:

1) SEE TRUSS MANUFACTURER'S TRUSS ENGINEERING CUT SHEETS FOR ADDITIONAL PERMANENT BRACING THAT MAY BE REQUIRED

2) "T" BRACING MAY BE USED IN PLACE OF PERMANENT BRACING PROVIDED IT EXTENDS OVER AT LEAST 90% OF THE WEB.

TB05 REQUIRED MINIMUM PERMANENT TRUSS BRACING PLAN — NTS

RSH ENGINEERED ROOF PER ASCE 7-22 ROOF DESIGN ALLOWABLE COMPONENTS AND CLADDING WIND PRESSURES AND SUCTIONS FOR MEAN ROOF HEIGHT ≤ 25 ft

WIND SPEED (ULTIMATE)	130 MPH
WIND SPEED (ALLOWABLE)	101 MPH
EXPOSURE CATEGORY	B

EFFECTIVE WIND AREA (SQ FEET)	WIND PRESSURE AND SUCTION (PSF) (-) VALUE DENOTES SUCTION			
AREA	ROOF	1	2	3
10	HIP	-22.94	-31.68	-31.68
	GABLE	-24.44	-38.92	-46.25

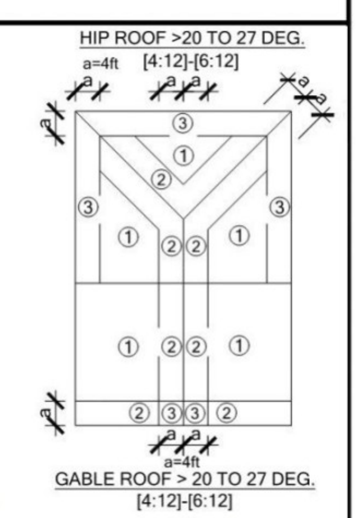

ROOF NAILING SCHEDULE/ NAILING ZONES (SHINGLE AND TILE):

ZONE 1: ASTM F1667 RSRS-01 (8d) NAILS @ 6" O.C. ON EDGE & 6" O.C IN FIELD
ZONE 2: ASTM F1667 RSRS-01 (8d) NAILS @ 4" O.C. ON EDGE & 4" O.C IN FIELD
ZONE 3: ASTM F1667 RSRS-01 (8d) NAILS @ 4" O.C. ON EDGE & 4" O.C IN FIELD

ROOF SHEATHING:

SHINGLE: 7/16" EXP. 1 (24/16) or 15/32" EXP. 1 (32/16)
TILE: 15/32" EXP. 1 (32/16)

NOTE:

1. PER CODE ASTM F1667 RSRS-01 REFERENCE TO 8d (2 3/8" x 0.113") NAILS
2. WHERE THE SHEATHING THICKNESS IS GREATER THAN 15/32", SHEATHING SHALL BE FASTENED WITH ASTM F1667 RSRS-03 10d (2½" x 0.131") NAILS OR ASTM F1667 RSRS-04 (3" x .120") NAILS
3. GABLES- DROP GABLE END & (1) ADDITIONAL DROPPED TRUSS 2x4 #2 SYP OUTLOOKER RAFTER W/ BLOCKING @ 16" O.C. IF NO DROPPED GABLE END, ATTACH 2x4 #2 SYP BLOCKING @ 16" O.C FIRST 4 BAYS WITH (2) 12d NAILS EA. END. ATTACH ROOF SHEATHING TO RAFTERS W/ BLOCKING PER NAILING SCHEDULE.

RSRS-01, RSRS-03, AND RSRS-04 ARE RING SHANK NAILS MEETING THE SPECIFICATIONS IN ASTM F1667

WALL SHEATHING MAY BE INSTALLED VERTICALLY OR HORIZONTALLY. ATTACH PER NAILING SCHEDULE. PANEL EDGES WILL NEED TO BE ATTACHED TO STUD AND OR BLOCKING AT ALL EDGES. A MINIMUM 1/8" SPACE IS RECOMMENDED BETWEEN PANELS AT EDGES AND END JOINTS TO ALLOW FOR EXPANSION. FASTENERS SHALL NOT PENETRATE SURFACE MORE THAN 1/8".

- (A) NAIL AT BASE 2 ROWS @ 4" O.C. w/ 8d COMMON NAIL.
- (B) NAIL AT TOP PLATE TWO ROWS @ 4" O.C. w/ 8d COMMON NAIL.
- (C) NAIL OPENING PERIMETER w/ (2) ROWS @ 4" O.C. w/ 8d COMMON NAIL.
- (D) NAIL INTERIOR AT 6" O.C. w/ 8d COMMON NAIL.
- (E) STAGGER ALL VERTICAL JOINTS & NAIL @ 4" O.C. w/ 8d COMMON NAIL.
- (F) PLYWOOD SPLICES @ HEADER - NAIL SHEATHING TO HEADER w/ 8d COMMON NAILS @ 4" O.C. (2) ROWS @ TOP & BOTT.
- (G) (2) 8d NAILS @ 3" O.C. TO EACH TRUSS END OR @ VERTICAL MEMBER IF GABLE END.
- (H) FLOOR SHEATHING ¾" PLYWOOD DECKING GLUED AN NAILED w/ 8d COMMON NAILS AT 6" O.C. AT EDGES OVERDRIVE NAILS: FASTNERS SHALL NOT PENETRATE SURFACE MORE THEN 1/8".

NOTE: 8d NAILS FOR WALL SHEATHING MUST BE MIN .131" X 2 1/2". DO NOT OVERDRIVE NAILS: FASTENERS SHALL NOT PENETRATE SURFACE MORE THAN 1/8"

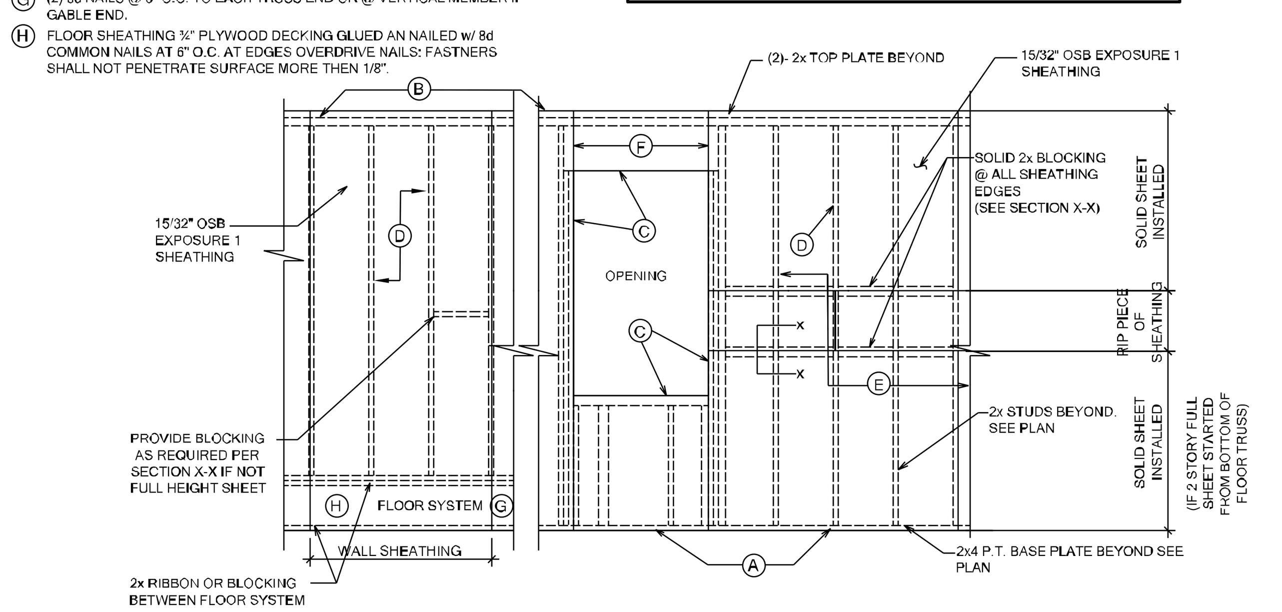

WALL ELEVATION DIAGRAM

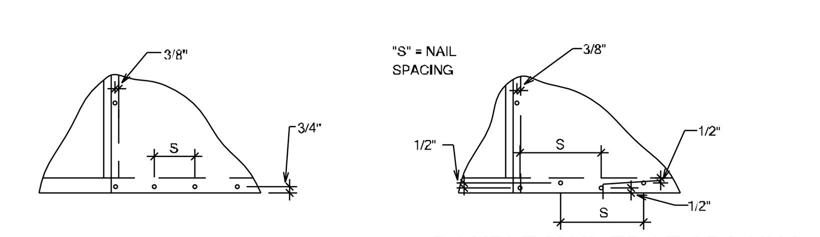

SINGLE NAIL EDGE SPACING   DOUBLE NAIL EDGE SPACING

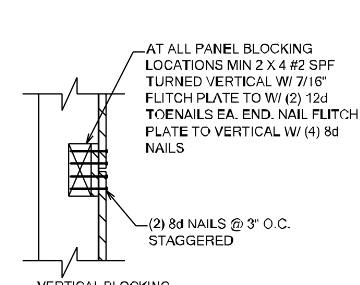

SECTION X-X

TB13 WALL SHEATHING INSTALLATION AND NAILING SCHEDULES — N.T.S.

ROOF CRITERIA

- -24" OVERHANG @ EAVES U.N.O.
- -12" OVERHANG @ GABLES U.N.O.
- -SQUARE CUT FASCIA
- -ROOF PITCH PER ELEVATION
- -SHINGLE LOADING

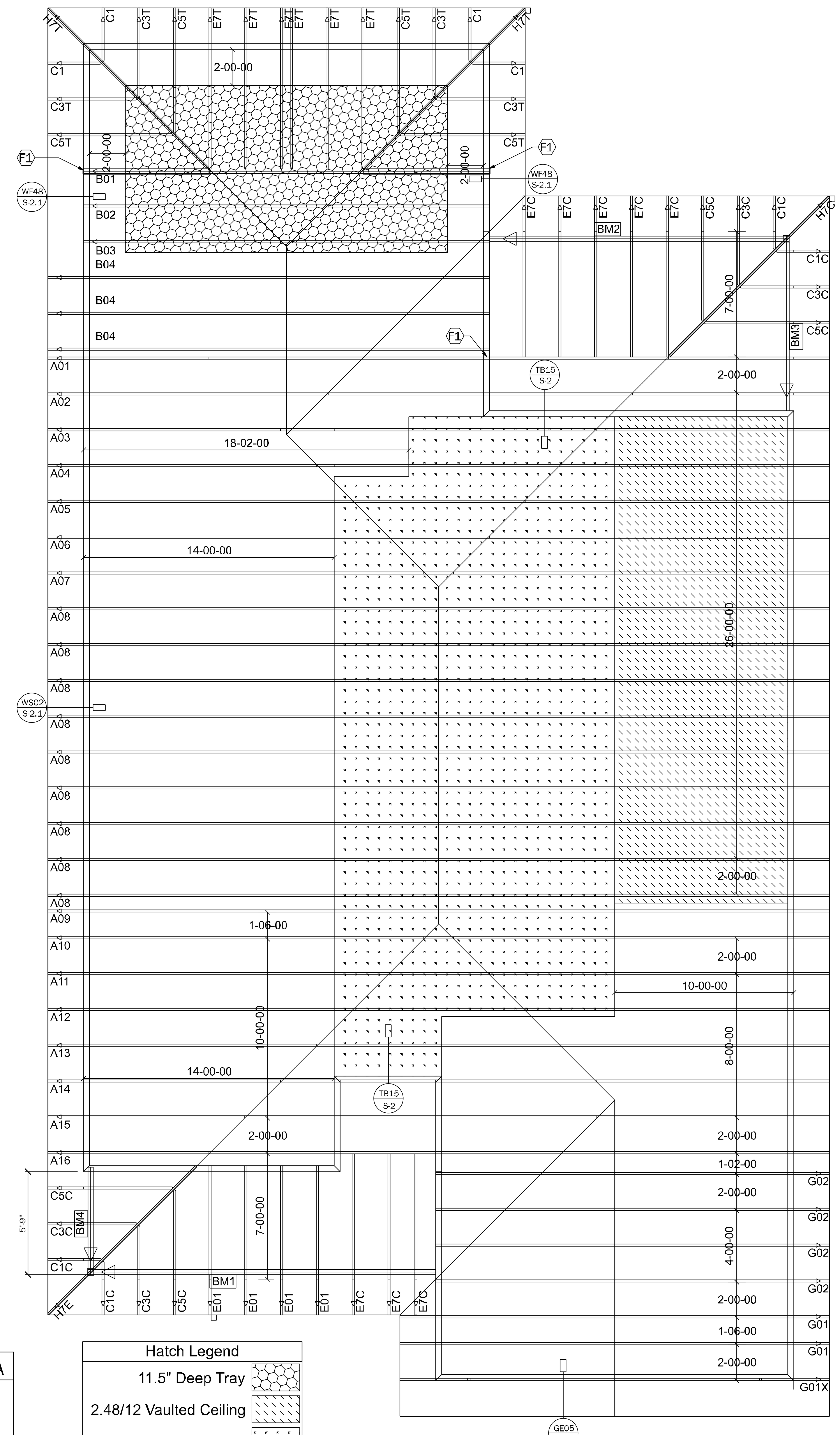

Hatch Legend	
11.5" Deep Tray	
2.48/12 Vaulted Ceiling	
10'-0" Flat Ceiling	

MARK	TYPE	SIMPSON - CONNECTOR SCHEDULE: CONNECTOR & FASTENERS	SPF	SYP	USP - CONNECTOR SCHEDULE: CONNECTOR & FASTENERS	SPF	SYP
A	FRAME TO MASONRY	HETA16 w/ (9)10d x 1 1/2" OR HETA20 w/ (9)10d x 1 1/2"		1810	HTA16 w/ (10)10d x 1 1/2" OR HTA20 w/ (10)10d x 1 1/2"	1585	1870
B	FRAME TO FRAME	H2.5A w/ (10)8d NAILS	615	700	RT7A w/ (10)8d NAILS	515	585
C	FRAME TO FRAME	H10A w/(18)10d x 1 1/2" H10A-2 w/(18)10d x 1 1/2" AT 2 PLY TRUSSES	1015 930	1040 1080	RT16A w/(17)10d x 1 1/2" RT16-2 w/(16)10d x 1 1/2" AT 2 PLY TRUSSES	895 935	1020 1060
D	FRAME TO FRAME	MTS12 w/(14)10d x 1 1/2" (AT EXTERIOR LOCATION INCLUDE (3) 12d TOENAILS)	860	990	MTW12 w/(14)10d x 1 1/2" (AT EXTERIOR LOCATION INCLUDE (3) 12d TOENAILS)	1005	1195
E	FRAME TO MASONRY	MGT w/(22)10d NAILS AND 5/8" A.T.R. w/ 12" EMBEDMENT w/ SIMPSON "SET-3G" EPOXY	3330	3965	MUGT15 w/(28)10d NAILS AND 5/8" A.T.R. w/ 12" EMBED. w/ SIMPSON "SET-3G" EPOXY	3330	4495
F	FRAME TO FRAME	HTS20 w/(24)10d x 1 1/2" (AT EXTERIOR LOCATION INCLUDE (3)12d TOENAILS	1215	1415	HTW20 w/(24)10d x 1 1/2" (AT EXTERIOR LOCATION INCLUDE (3)12d TOENAILS	1285	1530
F1	FRAME TO FRAME	(2) HTS20 w/(48)10d x 1 1/2" (AT EXTERIOR LOCATION INCLUDE (6) 12d TOENAILS	2430	2830	(2) HTW20 w/(48)10d x 1 1/2" (AT EXTERIOR LOCATION INCLUDE (6)12d TOENAILS (EA)	2570	3060
G	FRAME TO MASONRY	HGT-2 w/ (16)10d NAILS AND (2) 5/8" A.T.R. w/ 12" EMBEDMENT w/ SIMPSON "SET-3G" EPOXY (HGT-3 FOR 3-PLY)		10690	HUGT2 w/ (16)10d NAILS AND (2) 5/8" A.T.R. w/ 12" EMBEDMENT w/ SIMPSON "SET-3G" EPOXY (HUGT3 FOR 3-PLY)	7020	9790
H	FRAME TO MASONRY	FGTR w/ (18) 1/4" x 3" SDS WOOD SCREWS AND (2) 1/2" x 5" TITEN HD ANCHOR BOLTS	3400	4725	RFUS w/ (12) WS3 WOOD SCREWS AND (4) 3/4" x 6" WEDGE-BOLT		7100
J1	FRAME TO MASONRY	(1) LGT2 w/ (16) 16d SINKERS & (7) 1/4" x 2-1/4" TITEN 2 (SEE NOTE #6 BELOW)	1755	2040			
J2	FRAME TO MASONRY / FRAME	(2) LGT2 w/ (32) 16d SINKERS & (14) 1/4" x 2 1/4" TITEN (2 PLY TRUSS) OR (28) 16d SINKERS FOR FRAME (EA)	3500-M 3510-F	4060-M 4080-F	(2) LUGT2 w/ (32) 16d SINKERS & (10) 1/4" x 3" WEDGE-BOLT (2 PLY TRUSS) OR (32) 16d SINKERS FOR FRAME (EA)	3100-M 3800-F	3100-M 4520-F
J3	FRAME TO MASONRY / FRAME	(2) LGT3 w/ (24) 1/4" x 3" SDS SCREWS & (8) 3/8" x 5" TITEN (2 PLY TRUSS) OR (52) 16d SINKERS FOR FRAME (EA)	4730-M 5010-F	6570-M 6960-F	(2) LUGT3 w/ (24) 1/4" x 2 1/2" WS25 SCREWS & (4) 3/8" x 5" WB (2 PLY TRUSS) OR (56) 16d SINKERS FOR FRAME (EA)	6480-M 6480-F	7050-M 7710-F
K	BEAM TO BEAM	HU410 OPT HUC410 w/ (18) 16d & (10) 10d NAILS		G#2680 U#1895	HD410 OPT HD410IF w/ (20) 16d & (10) 10d NAILS		G#3080 U#1950
L	BEAM TO MASONRY	HU410 OPT HUC410 w/ (18) TITEN 1/4" x2 3/4" & (10) 10d NAILS		G#4500 U#1800	HD410 OPT HD410IF w/ (20) 1/4" x 3" WEDGE-BOLT & (10) 10d NAILS		G#3355 U#850
L2	BEAM TO MASONRY / FRAME	HU46 OPT HUC46 w/ (6) 10d NAILS & (12) 1/4" x 2 3/4" TITEN (TO MAS.) OR (12) 16d & (6) 10d (FOR FRAME)	G#2165 U#1135 SYP-F	G#3000 U#1135 SYP-M	HD46 OPT HU46 w/ (6) 10d NAILS & (12) 1/4" x 2 3/4" TAPCONS (TO MAS.) OR (12) 16d & (6) 10d (FOR FRAME)	G#1625 U#1030 SYP-F	G#2015 U#850 SYP-M
M	FRAME TO MASONRY	(2) HETA16 OPT (2) HETA20 1-PLY w/ (10) 10d x 1 1/2" OR 2-PLY w/ (12) 16d	1920 2365	1920 2365	(2) HTA16 OPT (2) HTA20 1-PLY w/ (10) 10d x 1 1/2" OR 2-PLY w/ (12) 16d		1870 2430
N	FRAME TO MASONRY	HTSM16 w/ (8)10d NAILS AND (4) 1/4"x2 1/4" TAPCONS OR HTSM20 w/ (10)10d NAILS AND (4) 1/4"x2 1/4" TAPCONS	955 955	1110 1110	HTWM16 w/ (8)10d NAILS AND (4) 1/4"x1 3/4" WEDGE-BOLT OR HTWM20 w/ (10)10d NAILS AND (4) 1/4"x1 3/4" WEDGE-BOLT	1145 1145	1225 1225
P	FRAME TO MASONRY	H10S w/ (8) 8d x1 1/2" NAILS AND (2) 3/8"x4" TITAN HD	785	910			
Q	FRAME TO MASONRY	DTT2Z w/ (8) 1/4" x1 1/2" SDS WOOD SCREWS AND (1) 1/2" Ø A.T.R. EPOXIED w/ SIMPSON "SET-3G" (SEE NOTE #4 & #5 BELOW)	1835	2145	DTB-TZ w/ (8) 1/4" x1 1/2" WS15 WOOD SCREWS AND (1) 1/2" Ø A.T.R. EPOXIED w/ SIMPSON "SET-3G" (SEE NOTE #4)	1510	1835
R	FRAME TO MASONRY	HTT5 w/ (26) 16d x2 1/2" NAILS AND (1) 5/8" Ø A.T.R. EPOXIED w/ SIMPSON "SET-3G" (SEE NOTE #4 & #5 BELOW)	4375	5090	HTT45 w/ (26) 16d x2 1/2" NAILS AND (1) 5/8" Ø A.T.R. EPOXIED w/ SIMPSON "SET-3G" (SEE NOTE #4 BELOW)	-	5005
S	FRAME TO MASONRY	HTT4 w/ (18) 16d x2 1/2" NAILS AND (1) 5/8" Ø A.T.R. EPOXIED w/ SIMPSON "SET-3G" (SEE NOTE #4 & #5 BELOW)	3640	4235	HTT45 w/ (18) 16d x2 1/2" NAILS AND (1) 5/8" Ø A.T.R. EPOXIED w/ SIMPSON "SET-3G" (SEE NOTE #4 BELOW)	-	4160
T	FRAME TO FRAME	H10S w/ (24) 10d x1 1/2" NAILS	785	910	LUGT1 w/ (23) 8d x1 1/2" NAILS	875	1045
U	FRAME TO MASONRY	HM9KT w/ (4) 1/4"x1 1/2" SDS WOOD SCREWS & (5) 1/4"x2 1/4" TAPCONS	760	760	RT16M w/ (9) 10d x 1 1/2" NAILS & (4) 1/4" x 1 3/4" TAPCONS	1395	1395
V	FRAME TO MASONRY	VGT w/ (16) 1/4"x3" SDS WOOD SCREWS & (1) 5/8" Ø A.T.R. EPOXIED w/ SIMPSON "SET-3G" w/ 12" MIN. EMBEDMENT	3555	4940			
W	FRAME TO MASONRY	(2) VGT w/ (32) 1/4"x3" SDS WOOD SCREWS & (2) 5/8" Ø A.T.R. EPOXIED w/ SIMPSON "SET-3G" w/ 12" MIN. EMBEDMENT	5170	7185			
X	FRAME TO FRAME	VGT w/ (16) 1/4"x3" SDS WOOD SCREWS & HDU4-SDS2.5 w/ (10) 1/4"x2 1/2" SDS WOOD SCREWS & (1) 5/8" Ø A.T.R.	3555	4940	MUGT15 w/ (22) 10d NAILS & HTT45 w/ (18) 10d NAILS & (1) 5/8" Ø A.T.R.	-	4160
Y		NOT USED					

GENERAL CONNECTOR NOTES:

1. CONNECT ALL FLOOR TRUSSES TO INTERIOR BEARING WOOD WALLS / BEAMS w/ (2) 12d TOENAILS.
2. ALL TRUSS TO TRUSS CONNECTIONS ARE PROVIDED BY TRUSS MANUFACTURER, U.N.O ON PLAN.
3. G.C. MAY USE EITHER SIMPSON OR USP CONNECTIONS, SEE FRAMING PLAN FOR CONNECTOR CALL OUT.
4. FOR SINGLE PLY TRUSSES, SCAB ON FULL HEIGHT SYP #1 2"x4" TO TRUSS VERTICAL WEB w/ (2) ROWS OF 10d NAILS @ 3" O.C. STAGGERED.
5. 12" MIN. A.T.R. EMBEDMENT @ CMU BOND BEAM U.N.O.
6. SCAB TRUSS CHORD w/ 4'-0" 2x SYP #2 (MATCH CHORD LUMBER SIZE) w/ (2) ROWS 10d @ 4" FROM END & 4" O.C. STAGGERED; CENTER AT CONNECTOR LOCATION AS MUCH AS POSSIBLE.

(A) MINIMAL CONNECTOR UNO ON FRAMING PLAN

1. CONNECTION FOR ALL ROOF / FLOOR TRUSSES TO MASONRY WALLS/ LINTELS/ ICF WALLS UNO ON PLAN
2. CONNECTION AT 24" OR 32" O.C. PENDING VERTICALS FOR ALL FLOOR TRUSSES PARALLEL TO MASONRY WALLS.
3. CONNECTION FOR ALL HIP JACK (CORNER JACK) TO MASONRY WALLS/ICF WALLS/LINTELS
4. CONNECTION FOR ALL CONTINUOUS RIM BOARD TO TOP OF MASONRY AT 32" O.C MAX. w/ (2) AT EACH CORNER. G.C. TO VERIFY LOCATION DOES NOT CONFLICT w/TJI (IF APPLICABLE) LAYOUT
5. CONNECT ALL FLOOR TRUSSES TO INTERIOR BEARING WOOD WALL/BEAMS w/ (2) 12d TONAILS

(B) MINIMAL CONNECTOR UNO ON FRAMING PLAN

1. CONNECTION FOR JACK TRUSS TO WOOD WALL OR BEAM

(C) MINIMAL CONNECTOR UNO ON FRAMING PLAN

1. CONNECTION FOR ALL TRUSSES TO INTERIOR/EXTERIOR BEARING WOOD WALLS AND/OR BEAMS

ROOF FRAMING NOTES

1. SHINGLE OR METAL ROOFING SYSTEM (SEE ARCH.) SHEATHING - SEE [RSH] SCHEDULE THIS SHT. FOR SHT'G & FASTENERS ON PRE- ENGINEERED WOOD TRUSSES AT 2'-0" O.C. MAX. OR CONVENTIONAL FRAME ROOF.(SEE PLAN FOR SIZE AND SPACING. SEE ARCHITECTURAL PLAN FOR TYPICAL ROOF SLOPE AND OTHER INFORMATION.
   TILE ROOFING SYSTEM (SEE ARCH.) SEE [RSH] SCHEDULE THIS SHEET
2. THE EXTERIOR CEILING FOR THE ENTRIES AND PORCHES SHALL HAVE EITHER 7/16" OSB EXPOSURE 1 SHEATHING OR ½" DENSGLASS TO THE UNDERSIDE OF THE ROOF TRUSSES. ALL PANEL EDGES ARE TO BE BLOCKED SOLID WITH 2x4 #2 SYP WITH (3) 10d TOENAILS EACH END. THE SHEATHING IS TO BE NAILED WITH 8d NAILS AT 4" ON CENTER AT ALL EDGES AND THEN 8" ON CENTER IN FIELD
3. FOR UNDERLAYMENT REQUIREMENTS SEE R905.1.1.1

- - - NOTE TO FRAMER - - -

IF ROOF TRUSS LAYOUT SHOWS TRUSS ID'S, THIS LAYOUT HAS BEEN PROVIDED BY THE CLIENT/ DESIGNER OR ARCHITECT TO USE FOR THE DESIGN OF THIS PROJECT. OTHERWISE A GENERIC LAYOUT HAS BEEN DETERMINED, BUT PRIOR TO CONSTRUCTION OR TRUSS FABRICATION, FINAL TRUSS LAYOUT AND TRUSS SHOP DRAWINGS ARE TO BE SUBMITTED TO ENGINEER OF RECORD (E.O.R.) FOR REVIEW AND APPROVAL. AT THIS TIME THE E.O.R. RESERVES THE RIGHT TO REVISE THE PLAN AS REQUIRED PER THE REVIEW OF THE FINAL TRUSS LAYOUT AND TRUSS SHOP DRAWINGS, ADDITIONAL FEE'S MAY APPLY. STARTING CONSTRUCTION OR TRUSS FABRICATION PRIOR TO THIS REVIEW IS NOT ADVISED, AND THE E.O.R. IS NOT RESPONSIBLE FOR ADDITIONAL COSTS DUE TO REVISIONS OF THE PLAN. IF CONVENTIONAL FRAMING IS SHOWN, NO TRUSS APPROVAL IS REQUIRED, UNLESS LAYOUT IS REVISED W/OUT WRITTEN APPROVAL FROM E.O.R.

SEE PLAN SET FOR TRUSS BRACING AND ADDITIONAL ROOF INFORMATION

TSG AA26003115 CA No. 9161
Making Dreams Come True
TOTAL SOLUTIONS GROUP
258 Southhall Lane, Suite 200
Maitland, Florida, 32751
(407) 800-2333
CARL A. BROWN, PE - FL # 56126
SCOTT LEWKOWSKI, PE - FL #78750
100% Employee Owned
myTSGhome.com

MUNICIPAL STAMP AREA

SIGNATURE & SEAL 7/30/2025

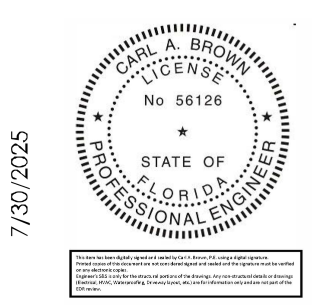

To the best of the Engineer's knowledge, information and belief, the structural plans and specifications contain within these drawings comply with the 2023 Florida Building Code- Residential 8th Edition. Engineer's signature and seal is only for the structural engineering portions of the drawing pages bearing engineer's signature and seal.

Builder: ADAMS HOMES
FLORIDA CONTRACTORS LICENSE NO. CRC1330146
100 WEST GARDEN STREET
PENSACOLA FL 32502
Division Location: GAINESVILLE

LOT: 38 | BLK: | UNIT:
Community: The Preserve at Laurel Lake
Plan Name: 1970
Project Address: 581 SW Bellflower Dr. Lake City, FL
Client No.:

Project No: 25-07823
Sheet No: **S-1**
ROOF PLAN "C"

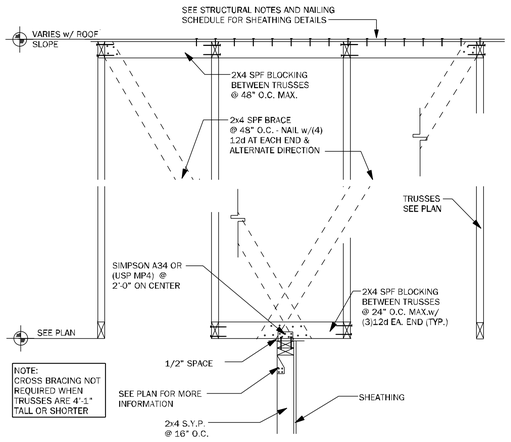

TB15	EXTERIOR NON-BEARING WALL DETAIL	N.T.S.

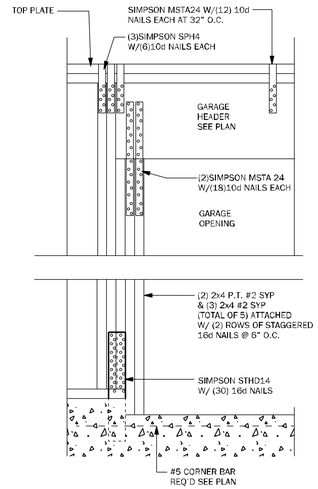

WC04	GARAGE HEADER ANCHOR	3/4" = 1'-0"

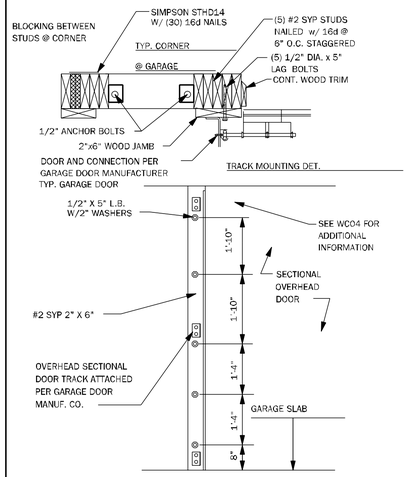

WC05	SECT. OVERHEAD GAR. DOOR INSTALL	N.T.S.

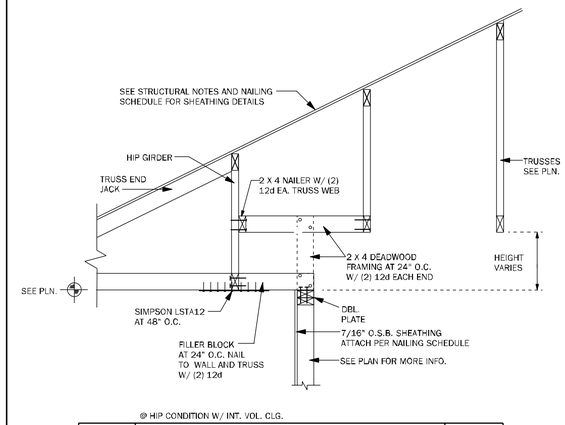

WF64	EXTERIOR NON BRG. WALL DETAIL	N.T.S.

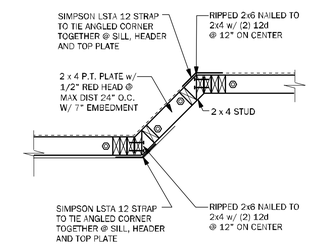

WF43	EXTERIOR ANGLED WALL DETAIL	N.T.S.

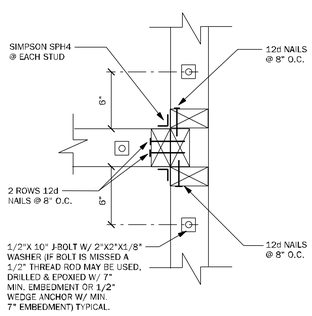

WC03	WALL TO WALL CONN. @ END OF SHEARWALL	1 1/2" = 1'-0"

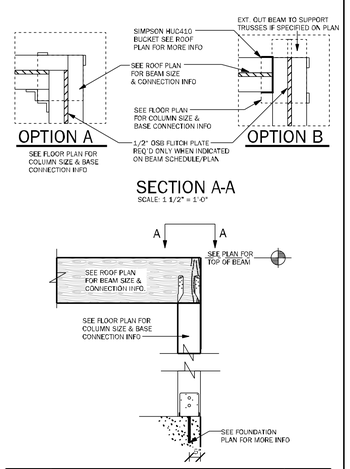

CD11	COMMON BEAM ATTACHMENT	N.T.S.

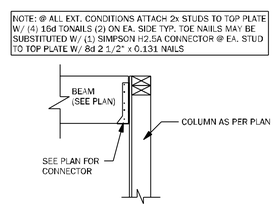

CD25	BEAM TO WALL CONNECTION	N.T.S.

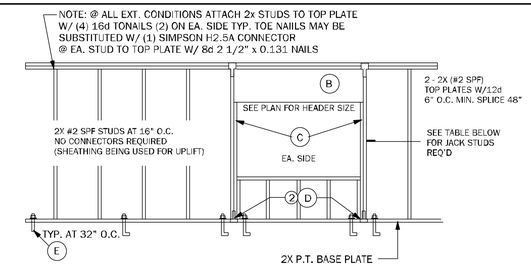

CONNECTOR LEGEND	
A	SIMPSON SPH4 W/ 12-10d x 1/2
B	(1) SIMPSON SDWC15600 @ 16" O.C.
C	(2) SIMPSON SDWC15600 @ EACH SIDE OF HEADER FROM KING STUDS TO TOP PLATE & (1) SDWC15600 FROM JACK STUD TO HEADER
D	SIMPSON SPH4 W/ 12-10d X 1 1/2"
E	1/2"X10" J-BOLT W/ 2"x2"x1/8" WASHER @ 32" O.C. PLUS (2) WITHIN 6" EACH SIDE OF JACK STUDS @ HEADER

WINDOW & DOOR JACK TABLE
PROVIDE JACKS @ EACH END AS FOLLOWS
(2) WHEN OPN'GS ARE GREATER THEN 4'-0"
(3) WHEN OPN'GS ARE GREATER THEN 10'-0" BUT LESS THAN 16'-0"

NOTE:
FOR EXTERIOR OR SHEAR WALL SEE SHEET S1 FOR WALL & ROOF SHEATHING INSTALLATION & NAILING SCHEDULES

WF66	TYPICAL BEARING WALL	N.T.S.

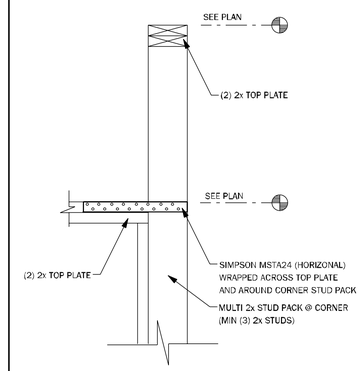

WC09	WALL STEP @ CORNER	N.T.S.

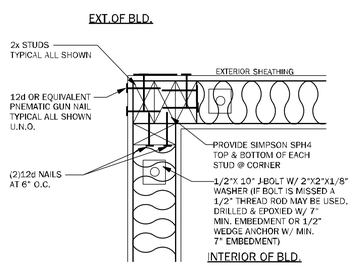

WC06	EXTERIOR FRAME CORNER	3/4" = 1'-0"

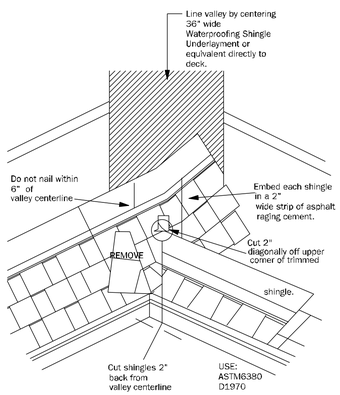

RD01	VALLEY FLASHING DETAIL	N.T.S.

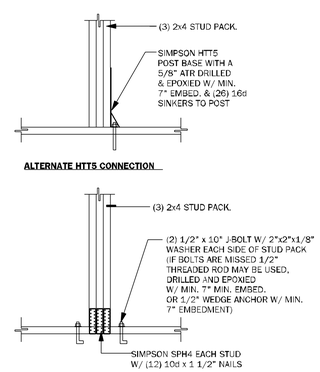

CD26	GIRDER BASE CONNECTION	1/2" = 1'-0"

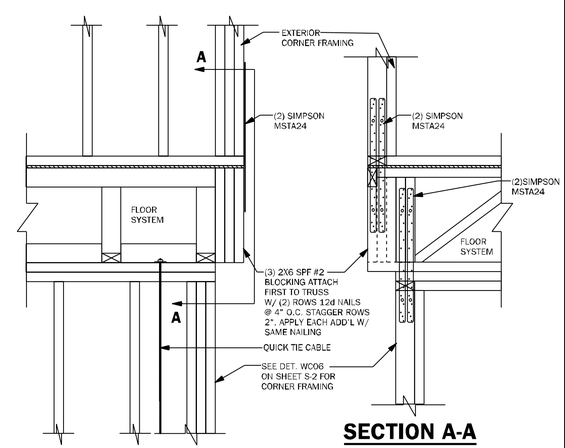

WF68	CORNER CONNECTION	N.T.S.

TSG
CA No 9161 AA26003115
Making Dreams Come True
TOTAL SOLUTIONS GROUP
258 Southhall Lane, Suite 200
Maitland, Florida, 32751
(407) 800-2333
CARL A. BROWN, PE - FL # 56126
SCOTT LEWKOWSKI, PE - FL #78750
100% Employee Owned
myTSGhome.com

ABD ATA fhba GO BA

MUNICIPAL STAMP AREA

SIGNATURE & SEAL
7/30/2025

CARL A. BROWN LICENSE No 56126 STATE OF FLORIDA PROFESSIONAL ENGINEER

This item has been digitally signature and sealed by Carl A. Brown on the date adjacent to the seal. Printed copies of this document are not considered signed and sealed and the signature must be verified on any electronic copies.

To the best of the Engineer's knowledge, information and belief, the structural plans and specifications contain within these drawings comply with the 2023 Florida Building Code- Residential 8th Edition. Engineer's signature and seal is only for the structural engineering portions of the drawing pages bearing engineer's signature and seal.

Builder: DAMS HOMES
FLORIDA CONTRACTORS LICENSE NO. CRC1330146
100 WEST GARDEN STREET
PENSACOLA FL 32502
Division Location: GAINESVILLE

LOT: 38 BLK: UNIT:
Community: The Preserve at Laurel Lake
Plan Name: 1970
Project Address: 581 SW Bellflower Dr. Lake City, FL
Client No.:

Project No.: 25-07823
Sheet No: S-2
TYPICAL FRAMING DETAILS

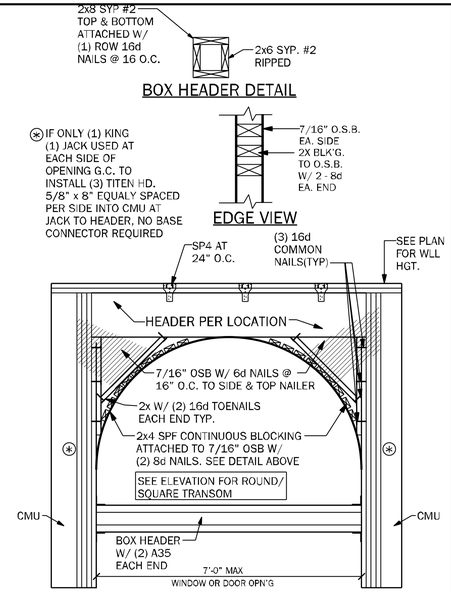

WF39 TRANSOM DETAIL AT ENTRY — 1/2" = 1'-0"

NOTE:
CONTRACTOR TO NAIL 1st. KING STUD INTO HEADER PER HEADER SCHEDULE, THEN ATTACH ADDITIONAL KINGS AS REQUIRED.

HEADER SUPPORT NO. OF JACKS & STUDS REQ. AT OPENINGS				
OPENING SIZE	2 X 4 WALL		2 X 6 WALL	
	JACKS EA END	KINGS EA END	JACKS EA END	KINGS EA END
LESS THAN 4'	(1)	(2)	(1)	(2)
>4' BUT <9'	(2)	(3)	(2)	(2)
10'-0" - 16'	(3)	(4)	(3)	(4)

HEADER ANCHOR NAILED TO TOP PLATES, HEADER & JACK	
HEADER SIZE & GRADE	NO. & SIZE OF RAFTER TIES EACH END
SEE PLAN FOR BEAM SIZE	(2) LSTA 30

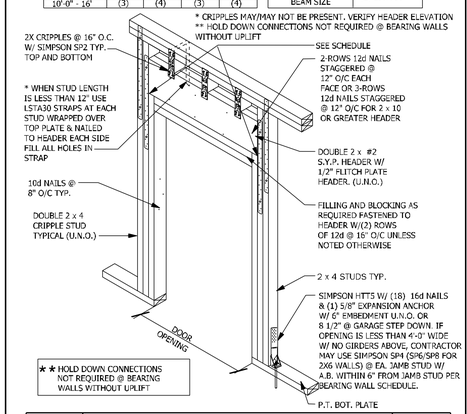

WF09 WALL HEADER DETAIL — N.T.S.

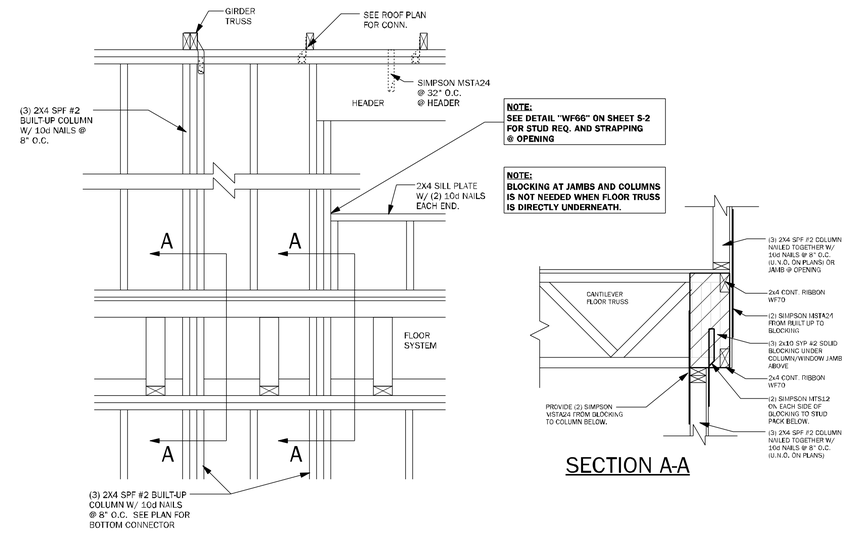

WF67 WALL FRAMING — 3/4" = 1'-0"

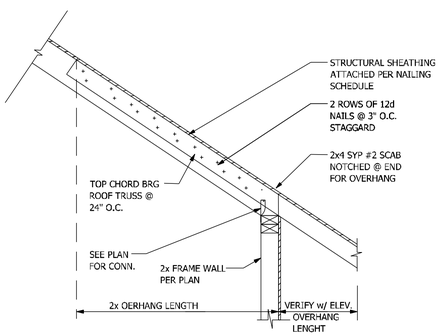

WF48 SCAB-ON DETAIL — 3/4" = 1'-0"

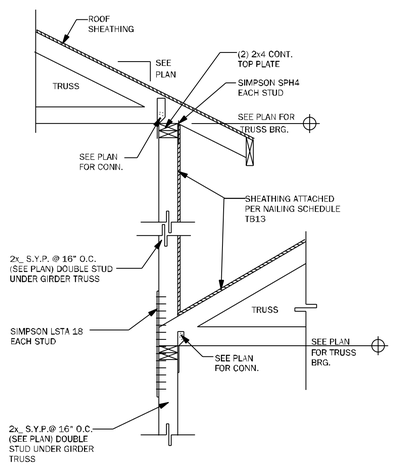

WF22 SECTION @ DOUBLE BEARING — 3/4" = 1'-0"

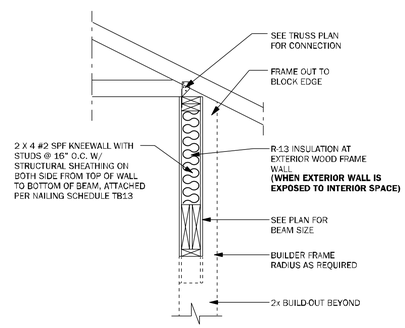

WF38 KNEEWALL @ ENTRY FRONT WALL — N.T.S.

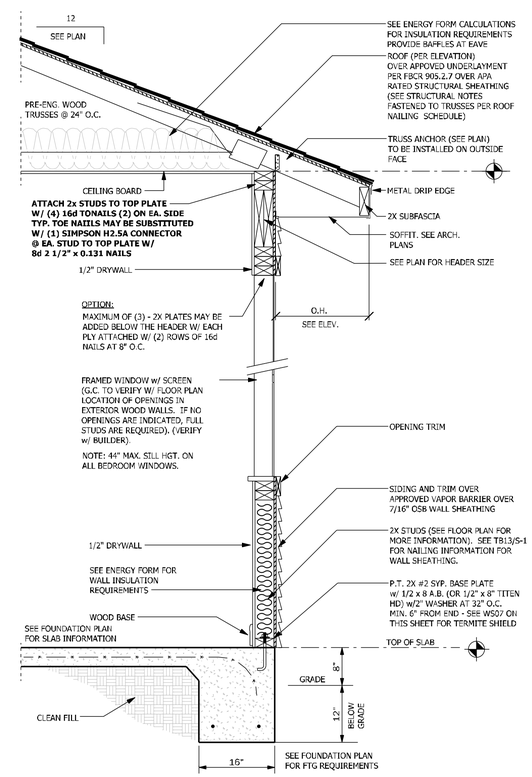

WS02 TYPICAL WALL SECTION EXTERIOR FRAME — 3/4" = 1'-0"

TSG
CA No. 9161
AA26003115
Making Dreams Come True
TOTAL SOLUTIONS GROUP
258 Southhall Lane, Suite 200
Maitland, Florida, 32751
(407) 800-2333
CARL A. BROWN, PE - FL # 56126
SCOTT LEWKOWSKI, PE - FL #78750
100% Employee Owned
myTSGhome.com

MUNICIPAL STAMP AREA

SIGNATURE & SEAL
7/30/2025

CARL A. BROWN
LICENSE
No 56126
STATE OF
FLORIDA
PROFESSIONAL ENGINEER

To the best of the Engineer's knowledge, information and belief, the structural plans and specifications contain within these drawings comply with the 2023 Florida Building Code- Residential 8th Edit on. Engineer's signature and seal is only for the structural engineering portions of the drawing pages bearing engineer's signature and seal.

Builder: ADAMS HOMES
FLORIDA CONTRACTORS LICENSE NO. CRC1330146
100 WEST GARDEN STREET
PENSACOLA FL 32502
Division Location: GAINESVILLE

LOT: 38
BLK:
UNIT:
Community: The Preserve at Laurel Lake
Plan Name: 1970
Project Address: 581 SW Bellflower Dr. Lake City, FL
Client No.:

Project No: 25-07823
Sheet No: **S-2.1**
TYPICAL FRAMING DETAILS

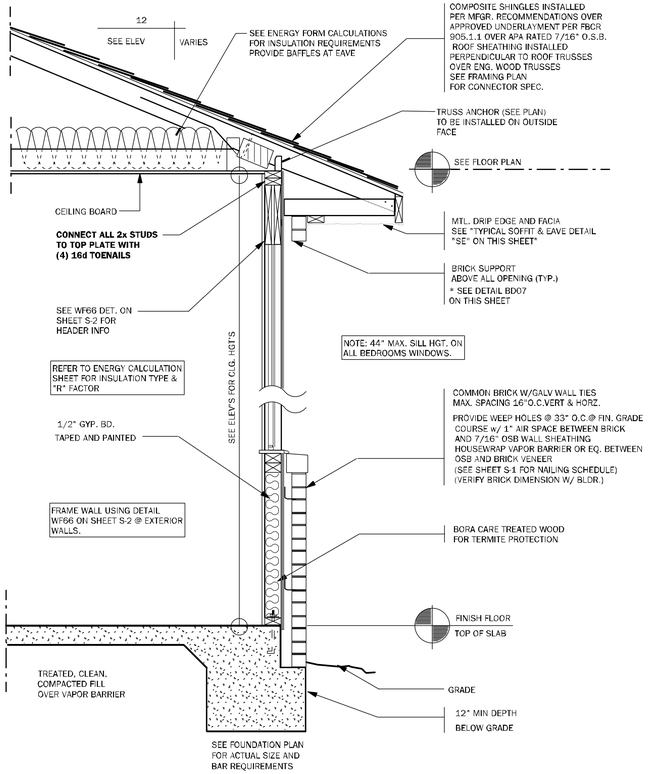

BD12 TYPICAL WALL SECTION — 3/4" = 1'-0"

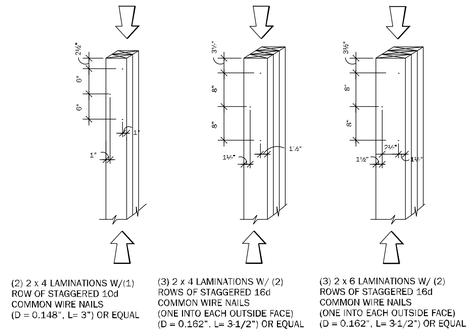

WF37 TYPICAL COLUMNS DETAILS — N.T.S.

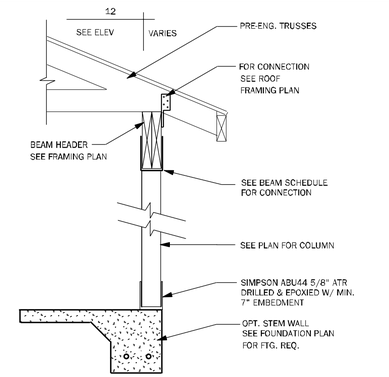

CD24 POST & BEAM DETAIL — 1/2" = 1'-0"

VERIFY BRICK DIMENSION W/ BLDR.

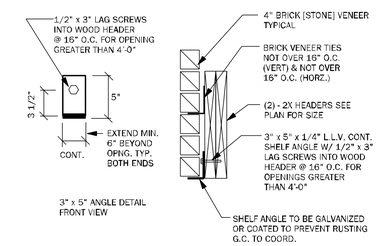

BD07 BRICK SHELF DETAIL — N.T.S.

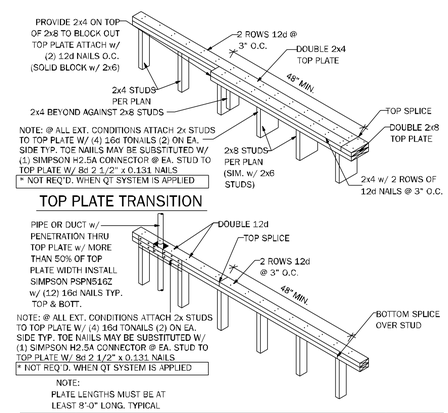

WF17 TOP PLATE SPLICE DETAIL — 3/4" = 1'-0"

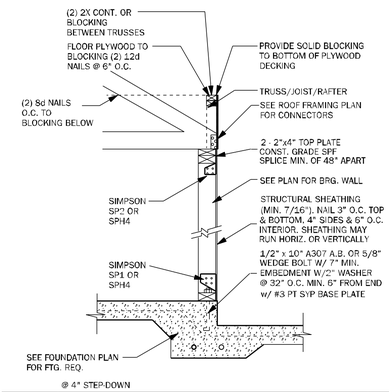

SW01 INTERIOR BEARING SHEARWALL w/UPLIFT — N.T.S.

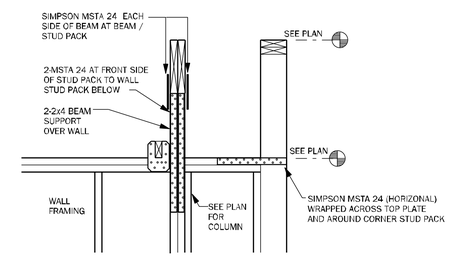

WC08 STEP UP @ CORNER & RAISED BEAM — N.T.S.

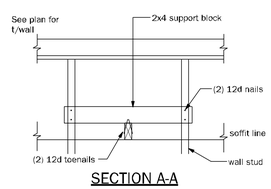

SECTION A-A

NOTE:
G.C. SHALL VERIFY SOFFIT MATERIAL CAPACITY TO RESIST THE DESIGN PRESSURES SPECIFIED PER FBC2020 7th. EDITION R301 FOR THE COMPONENTS AND CLADDING WIND PRESSURE.

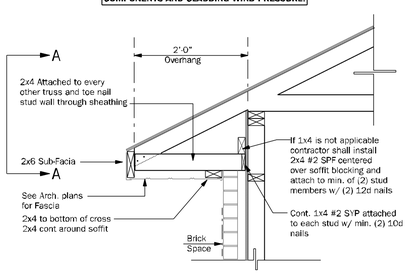

SE TYPICAL SOFFIT AND EAVE DETAIL — 3/4" = 1'-0"

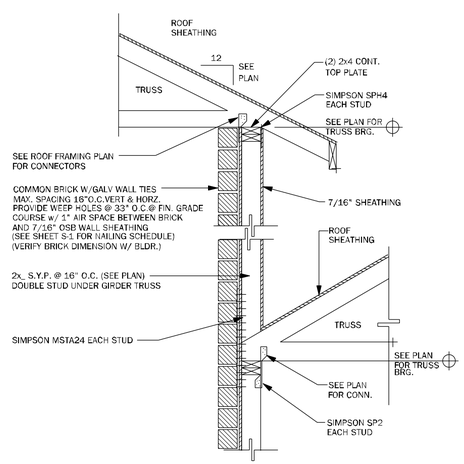

WF63 SECTION AT DOUBLE BEARING — N.T.S.

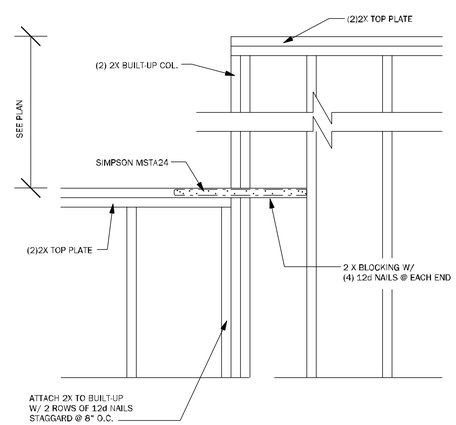

WC07 STEP UP @ CORNER & RAISED BEAM — 1/2" = 1'-0"

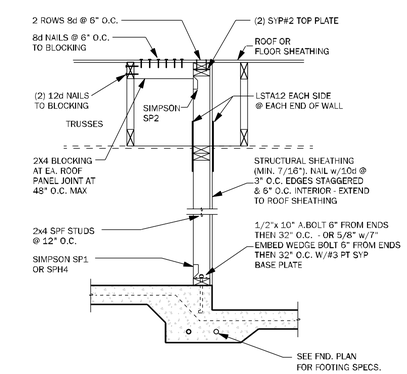

STEP DOWN, WALL TO TRUSS

SW04 INTERIOR SHEARWALL @ TRUSSES — 3/4" = 1'-0"

TSG
CA No. 9161 AA26003115
Making Dreams Come True
TOTAL SOLUTIONS GROUP
258 Southhall Lane, Suite 200
Maitland, Florida, 32751
(407) 800-2333
CARL A. BROWN, PE - FL # 56126
SCOTT LEWKOWSKI, PE - FL #78756
100% Employee Owned
myTSGhome.com

ABD ATA fhba GO BA

MUNICIPAL STAMP AREA

SIGNATURE & SEAL
7/30/2025
CARL A. BROWN LICENSE No 56126 STATE OF FLORIDA PROFESSIONAL ENGINEER

In the best of the Engineer's knowledge, information and belief, the structural plans and specifications contain within these drawings comply with the 2023 Florida Building Code- Residential 8th Edition. Engineer's signature and seal is only for the structural engineering portions of the drawing pages bearing engineer's signature and seal.

Builder: ADAMS HOMES
FLORIDA CONTRACTORS LICENSE NO. CRC1330146
100 WEST GARDEN STREET
PENSACOLA FL 32502
Division Location: GAINESVILLE

LOT: 38 | BLK: | UNIT:
Community: The Preserve at Laurel Lake
Plan Name: 1970
Project Address: 581 SW Bellflower Dr. Lake City, FL
Client No.:

Project No: 25-07823
Sheet No: **S-3**
TYPICAL WALL DETAILS

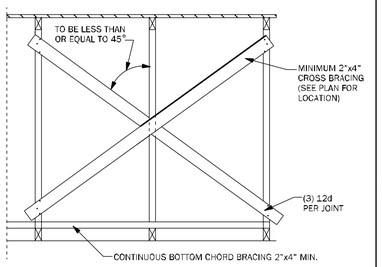

TB01 TYPICAL CROSS BRACING DETAIL — N.T.S.

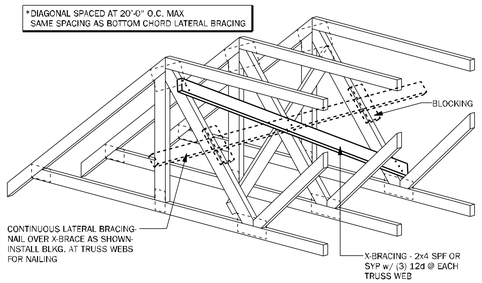

TB02 TYPICAL CROSS BRACING DETAIL — N.T.S.

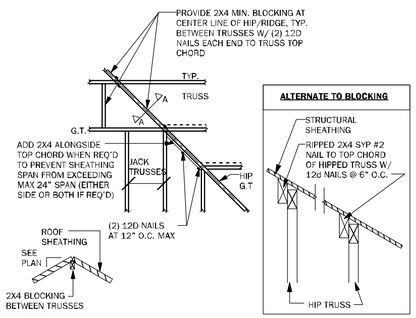

TB03 HIP / RIDGE BLOCKING DETAIL — N.T.S.

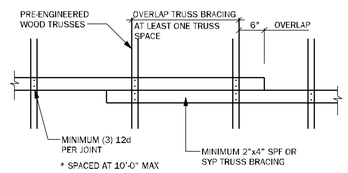

TB04 TRUSS BRACING OVERLAP DETAIL (TYP) — N.T.S.

TRUSS NOTES:

1. WOOD TRUSS ERECTOR SHALL PROVIDE BRACING ACCORDING TO ANSI/TPI-2014 (TRUSS PLATE INSTITUTE) NOTE THAT THE COMBINED WIND AREA IS GREATER BEFORE THE ROOF SHEATHING IS APPLIED, AND BRACING SHALL THEREFORE BE INSTALLED AS THE TRUSSES ARE ERECTED. INADEQUATE BRACING IS THE MOST COMMON CAUSE OF ACCIDENT IN WOOD TRUSS CONSTRUCTION. FULL BUNDLES OF SHEATHING SHALL NOT BE PLACED ON TRUSSES. THIS CONSTRUCTION LOAD SHOULD BE LIMITED TO 8 SHEETS OF SHEATHING ON ANY PAIR OF TRUSSES & SHALL BE LOCATED ADJACENT TO THE SUPPORTS. NO EXCESS CONCENTRATION OF ANY CONSTRUCTION MATERIAL (SUCH AS GRAVEL OR SHINGLES) SHALL BE PLACED ON THE TRUSSES IN ANY ONE AREA THEY SHALL BE SPREAD OUT EVENLY OVER A LARGE AREA SO AS TO AVOID OVERLOADING ANY ONE TRUSS.
2. ALL BRACING (DB,CB,BB) SHOWN ABOVE SHALL BE IN ADDITION TO CONTINUOUS LATERAL BRACING SPECIFIED BY THE TRUSS MANUFACTURER ALL LATERAL BRACING SPECIFIED BY TRUSS MANUF. SHALL HAVE ADDITIONAL DIAGONAL BRACES AT 20'-0" O.C. MAXIMUM.
3. ALL BRACES SHALL BE 2X4 NOMINAL DIMENSION LUMBER & SHALL BE ATTACHED W/ (3) 12d NAILS AT EACH TRUSS INTERSECTION.
4. ADDITIONAL BOTTOM CHORD BRACING SHALL BE INSTALLED AS REQUIRED BY TRUSS DESIGN WHEREVER ADEQUATE STRUCTURAL CEILING ARE NOT ATTACHED DIRECTLY TO THE BOTTOM CHORD OF THE TRUSS.
5. PROVIDE TRUSS BLOCKING AT ALL TRUSS BEARING SUPPORTS WHERE TRUSS DEPTH EXCEEDS STANDARD HEEL HEIGHT. SEE TYP. TRUSS BLOCKING DETAILS

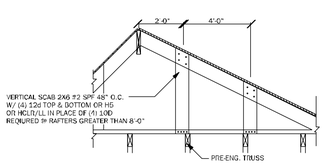

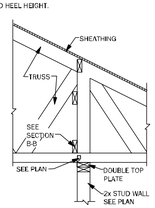

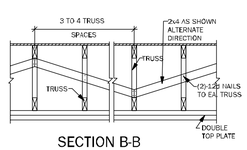

SECTION B-B

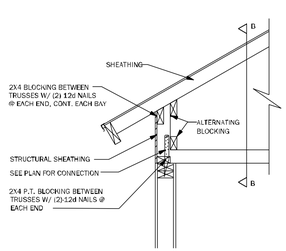

TYP. WOOD TRUSS BLOCKING
@ RAISED HEEL DETAIL

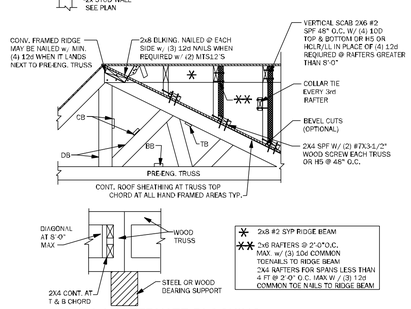

A-A ALTERNATE BLOCKING
DETAIL @ INTERIOR BEARING

TB06 BLOCKING AND CONVENTIONAL FRAME DETAILS — 3/4" = 1'-0"

THE HEIGHT OF THE CHIMNEY SHOULD EXTEND 2' ABOVE THE POINT WHERE THE CHIMNEY IS 10' FROM THE NEAREST BUILDING SURFACE.

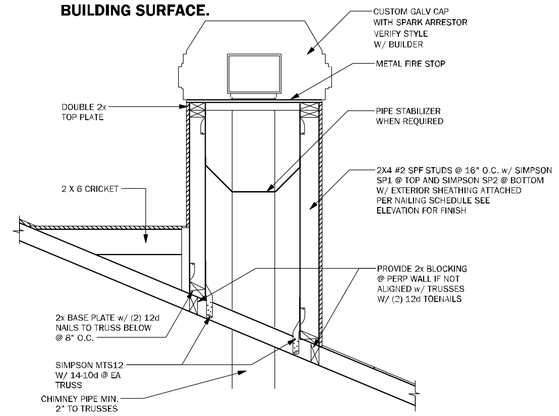

CH01 TYPICAL CHIMNEY FRAME DETAIL — 3/4" = 1'-0"

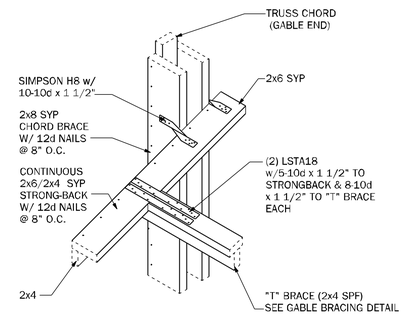

GE04 "T" BRACE CONNECTION @ GABLE END W/ VOLUME CEILING — 3/4" = 1'-0"

RAFTER SIZE
0'-8' SPAN - 2"X6" W/4-12d EACH END
8'-12' SPAN - 2"X8" W/4-12d EACH END
12'-15' SPAN - 2"X10" W/ SIMPSON A 34 @ EA. END
15'-18' SPAN - 2"X12" W/SIMPSON A 34 @ EA. END

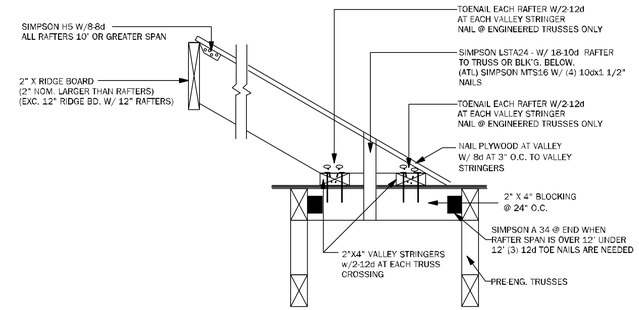

TB17 CONV. FRAMING & VALLEY FRAMING — N.T.S.

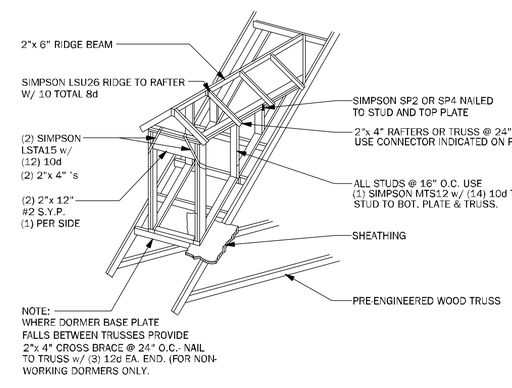

WF05 DORMER FRAMING DETAIL — N.T.S.

TSG
CA No. 9161 AA26003115
Making Dreams Come True
TOTAL SOLUTIONS GROUP
258 Southhall Lane, Suite 200
Maitland, Florida, 32751
(407) 800-2333
CARL A. BROWN, PE - FL # 56126
SCOTT LEWKOWSKI, PE - FL #78750
100% Employee Owned
myTSGhome.com

ABD AIA fhba GOBA

MUNICIPAL STAMP AREA

SIGNATURE & SEAL
7/30/2025

CARL A. BROWN
LICENSE
No 56126
STATE OF FLORIDA
PROFESSIONAL ENGINEER

To the best of the Engineers knowledge, information and belief, the structural plans and specifications contain within these drawings comply with the 2023 Florida Building Code- Residential 8th Edition. Engineer's signature and seal is only for the structural engineering portions of the drawing pages bearing engineer's signature and seal.

Builder: ADAMS HOMES
FLORIDA CONTRACTORS LICENSE NO. CRC1330146
100 WEST GARDEN STREET
PENSACOLA FL 32502
Division Location: GAINESVILLE

LOT: 38 | BLK: | UNIT:
Community: The Preserve at Laurel Lake
Plan Name: 1970
Project Address: 381 SW Bellflower Dr. Lake City, FL
Client No.:

Project No: 25-07823
Sheet No: **S-4**
ROOF FRAMING AND BRACING DETAILS

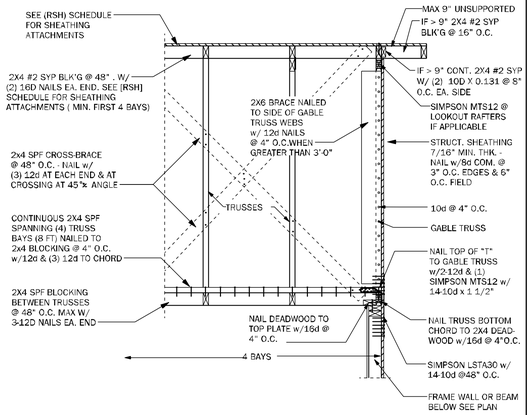

GE05	GABLE END BRACING - FRAME WALL	N.T.S.

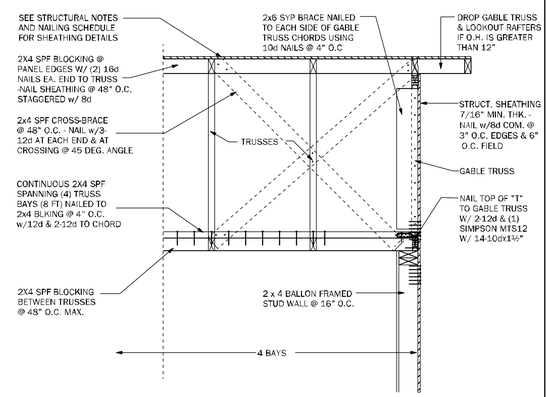

GE22	GABLE END BRACING w/ VOL CEILING	1/2"=1'-0"

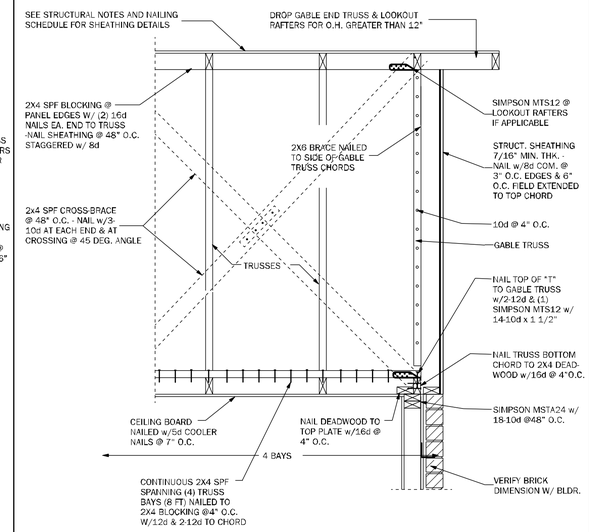

GE23	GABLE END BRACING w/o VOLUME CEILING	1/2"=1'-0"

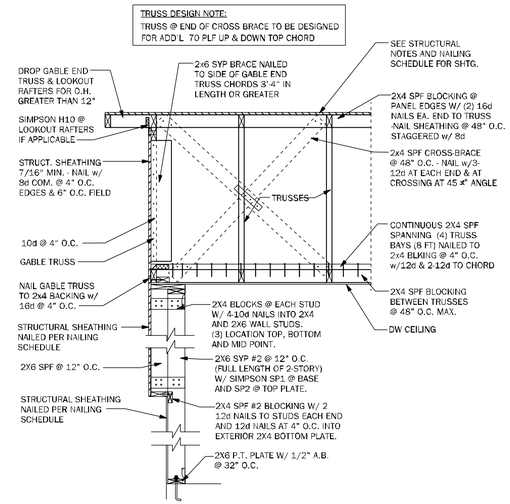

GE24	GABLE @ VAULT	N.T.S.

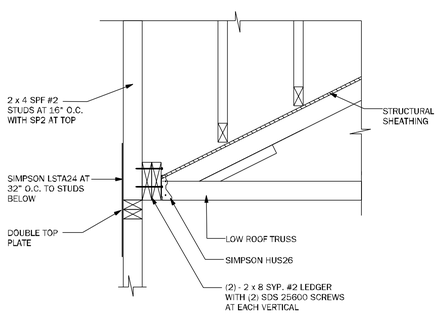

WF72	LEDGER	N.T.S.

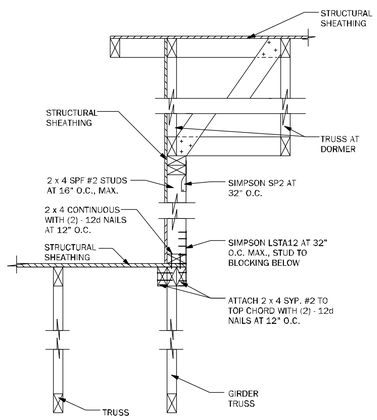

WF73	KNEEWALL @ DORMER	N.T.S.

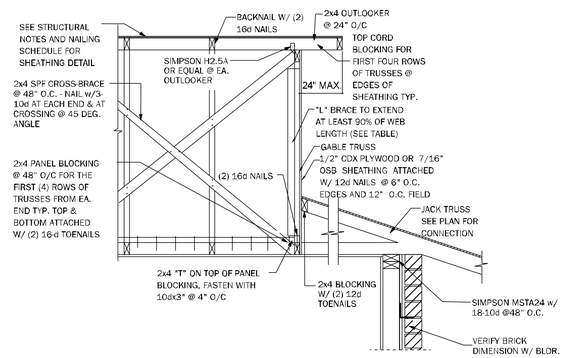

GE21	SECTION @ DUTCH GABLE	3/4" = 1'-0"

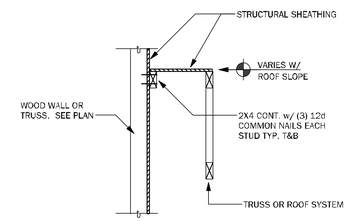

LD02	SHEAR TRANSFER EXTERIOR WALL	N.T.S.

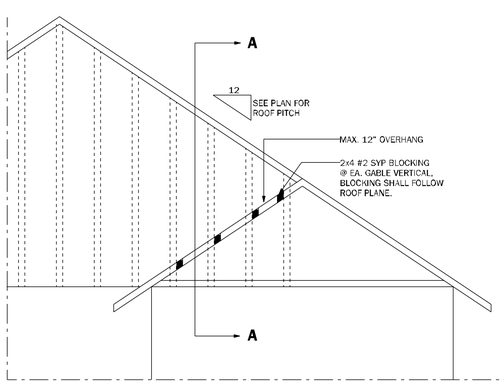

SECTION A-A

FOR BLOCKING & BRACING INFORMATION REFER TO GE23 ON SHEET "S4.1"

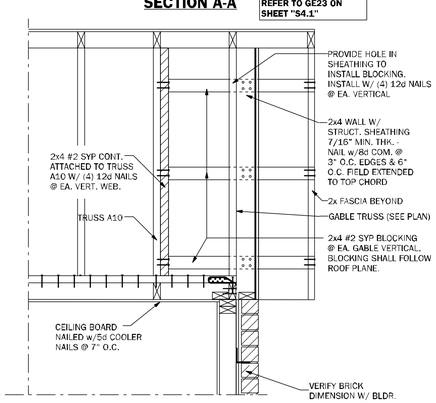

GE23.1	GABLE END OVERHANG	1/2"=1'-0"

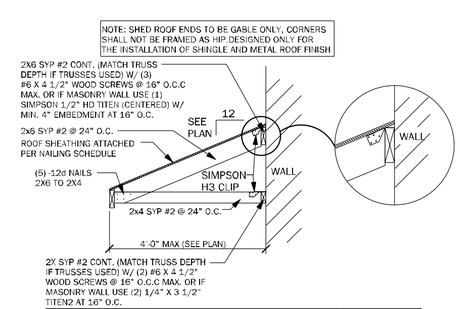

SR01	SECTION AT SHED ROOF	3/4" = 1'-0"

TSG
CA No. 9161
AA26003115
Making Dreams Come True

TOTAL SOLUTIONS GROUP
258 Southhall Lane, Suite 200
Maitland, Florida, 32751
(407) 800-2333
CARL A. BROWN, PE - FL # 56126
SCOTT LEWKOWSKI, PE - FL #78750

100% Employee Owned
myTSGhome.com

MUNICIPAL STAMP AREA

SIGNATURE & SEAL
7/30/2025

CARL A. BROWN LICENSE No 56126 STATE OF FLORIDA PROFESSIONAL ENGINEER

To the best of the Engineer's knowledge, information and belief, the structural plans and specifications contain within these drawings comply with the 2023 Florida Building Code- Residential 8th Edition. Engineer's signature and seal is only for the structural engineering portions of the drawing pages bearing engineer's signature and seal.

Builder: ADAMS HOMES
FLORIDA CONTRACTORS LICENSE NO. CRC1330146
100 WEST GARDEN STREET
PENSACOLA FL 32502
Division Location: GAINESVILLE

LOT: 38 BLK: UNIT:
Community: The Preserve at Laurel Lake
Plan Name: 1970
Project Address: 581 SW Bellflower Dr. Lake City, FL
Client No.:

Project No: 25-07823
Sheet No: **S-4.1**
ROOF FRAMING AND BRACING DETAILS

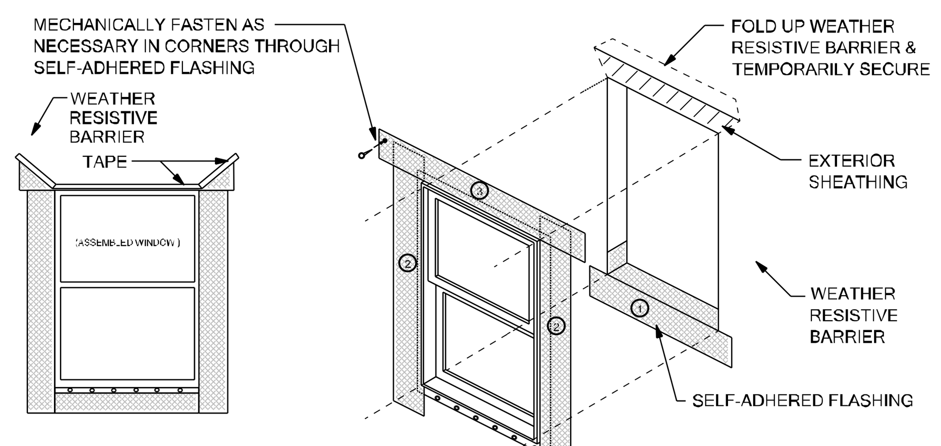

HEAD FLASHING TIE-IN INSTRUCTIONS:
1. Cut, fold up & temporarily secure weather resistive barrier above header to allow for flashing installation
2. Self-adhered flashing plus head flashing under weather resistive barrier
3. Fold weather resistive barrier back over head flashing and seal with tape

① ②

SELF-ADHERED FLASHING
FLANGED WINDOW
FLASHING INSTALLATION AFTER WEATHER RESISTIVE BARRIER

Scale: NTS

WP01

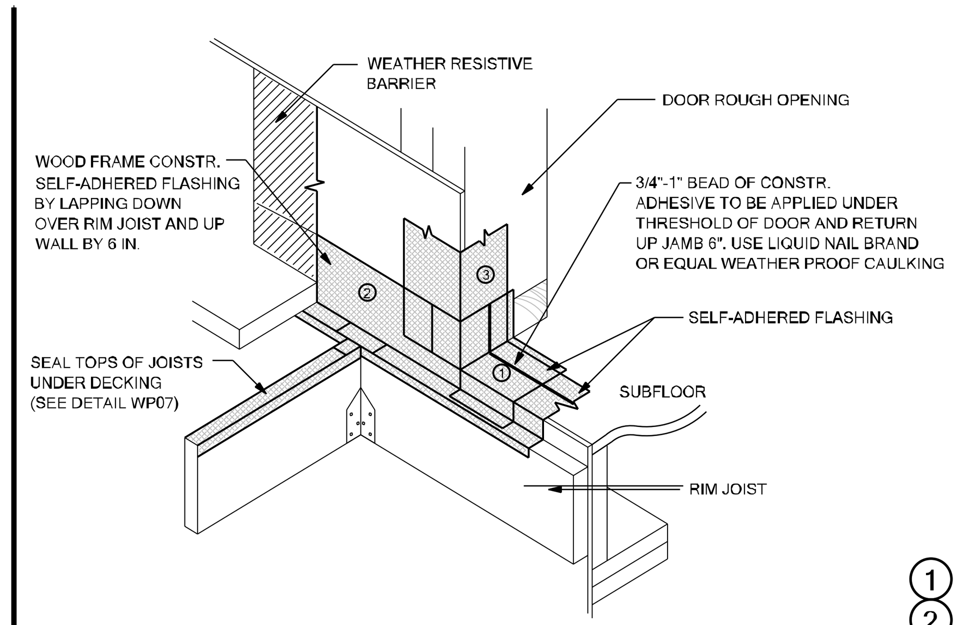

① ②

SELF-ADHERED FLASHING
EXTERIOR DOOR WITH DECK - SECTION A

WP02

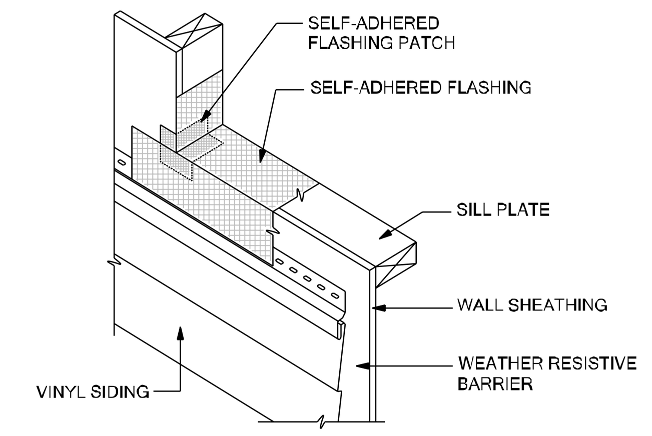

NOTES:
1. INSTALL WEATHER RESISTIVE BARRIER TO FORM WATER-SHEDDING LAPS.
2. FOR SILL PAN DEPTHS GREATER THAN 6 INCHES, A SLOPED SILL IS REQUIRED IN ACCORDANCE WITH ASTM E 2112
3. A BACK DAM CAN BE ACCOMPLISHED USING A WOODEN FURRING STRIP OR BY FOLDING THE ADHESIVE LAYER ONTO ITSELF.
4. EXTEND SELF-ADHERED FLASHING OVER NAILING FLANGE OF THE LAST COMPLETE COURSE OF SIDING PANEL AND TRIM TO PROTECT FROM PERMANENT EXPOSURE TO UV.

TIE-IN WITH VINYL SIDING
AT WINDOW SILL

WP03

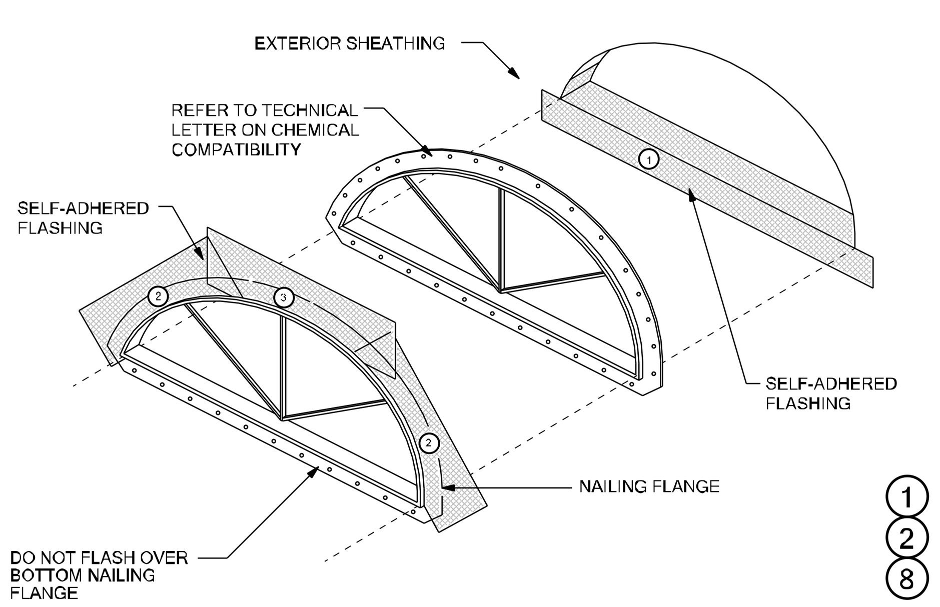

① ② ⑧

SELF-ADHERED FLASHING
HALF ROUND WINDOW

WP04

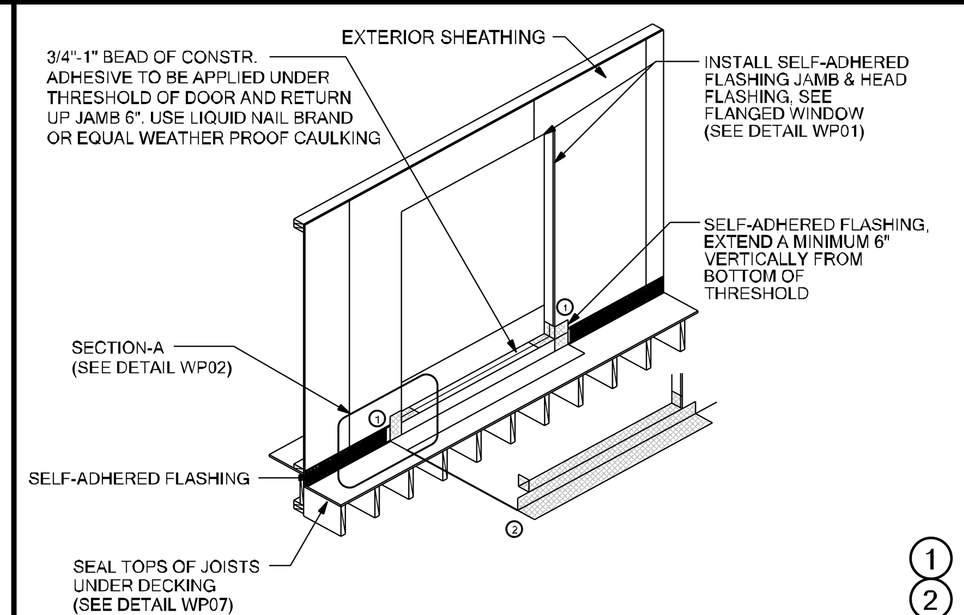

① ②

SELF-ADHERED FLASHING
EXTERIOR DOOR WITH DECK

WP05

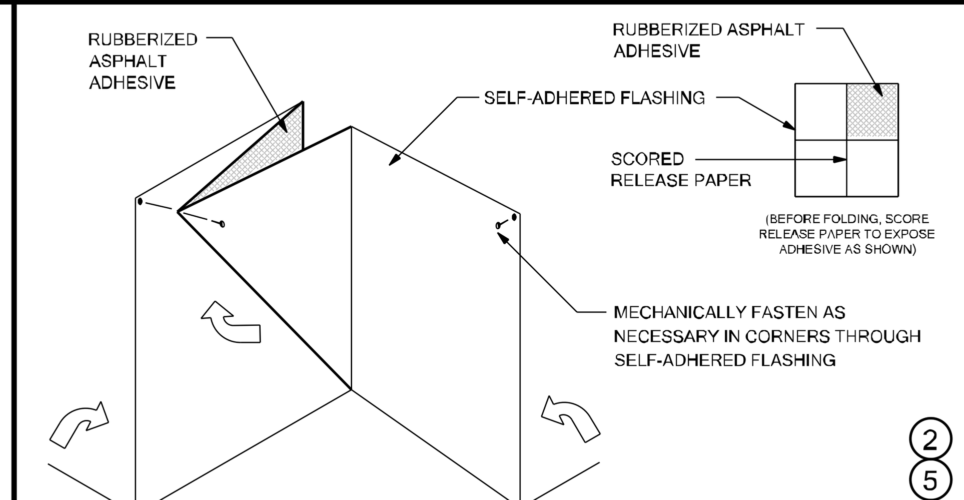

② ⑤ ④ ⑥ ⑦

SELF-ADHERED FLASHING
INSIDE CORNER

WP06

THESE DETAILS ARE GENERIC AND MEANT TO SHOW GENERAL FLASHING AND WATERPROOFING METHODS TO BE USED.

SELF-ADHERED FLASHING PRODUCTS DETAILS

WATER RESISTIVE BARRIERS ARE REQUIRED BEHIND STUCCO. PER FBCR (CURRENT EDITION)

DETAIL INSTRUCTIONS

REFER TO THE NUMBER MARKED AS (#) IN EACH DETAIL THAT CORRESPONDS TO THE NUMBERED ITEMS IN THE LIST OF INSTRUCTIONS BELOW:
1. INSTALL SELF-ADHERED FLASHING IN ORDER AS SHOWN BY NUMBERS.
2. INSTALL FLASHING AND WEATHER RESISTIVE BARRIER TO FORM WATER SHEDDING LAPS.
3. SELF-ADHERED FLASHING CAN BE SUBSTITUTED FOR BUILDING PAPER.
4. SPLIT THE RELEASE PAPER USING THE RIPCORD (SPLIT RELEASE ON DEMAND, EMBEDDED IN THE ADHESIVE LAYER) - FOR EASE OF INSTALLATION AND TO MINIMIZE SCORING CUTS.
5. REMOVE ALL RELEASE PAPER PER STANDARD INSTALLATION INSTRUCTIONS AND ADHERE TO SUBSTRATE USING A SQUARE PIECE. OF FLASHING MATERIAL (6" X 6" MINIMUM).
6. FOLD AS SHOWN BY ARROWS.
7. ANGLE OF CORNER MAY VARY, ADJUST FOLDING OF THE FLASHING ACCORDINGLY TO FIT TIGHT TO CORNER.
8. MECHANICALLY FASTEN AS NECESSARY.

FLASHING REQUIREMENTS

R703.1 GENERAL. EXTERIOR WALLS SHALL PROVIDE THE BUILDING WITH A WEATHER-RESISTANT EXTERIOR WALL ENVELOPE. THE EXTERIOR WALL ENVELOPE SHALL INCLUDE FLASHING AS DESCRIBED IN SECTION R703.4.

R703.1.1 WATER RESISTANCE. THE EXTERIOR WALL ENVELOPE SHALL BE DESIGNED AND CONSTRUCTED IN AMANNER THAT PREVENTS THE ACCUMULATION OF WATER WITHIN THE WALL ASSEMBLY BY PROVIDING A WATER-RESISTANT BARRIER BEHIND THE EXTERIOR CLADDING AS REQUIRED BY SECTION R703.2 AND A MEANS OF DRAINING TO THE EXTERIOR WATER THAT PENETRATES THE EXTERIOR CLADDING.

R703.2 WATER-RESISTIVE BARRIER. NOT FEWER THAN ONE LAYER OF WATER-RESISTIVE BARRIER SHALL BE APPLIED OVER STUDS OR SHEATHING OF ALL EXTERIOR WALLS WITH FLASHING AS INDICATED IN SECTION R703.4, IN SUCH A MANNER AS TO PROVIDE A CONTINUOUS WATER-RESISTIVE BARRIER BEHIND THE EXTERIOR WALL VENEER. THE WATER-RESISTIVE BARRIER MATERIAL SHALL BE CONTINUOUS TO THE TOP OF WALLS AND TERMINATED AT PENETRATIONS AND BUILDING APPENDAGES IN A MANNER TO MEET THE REQUIREMENTS OF THE EXTERIOR WALL ENVELOPE AS DESCRIBED IN SECTION R703.1. WATER-RESISTIVE BARRIER MATERIALS SHALL COMPLY WITH ONE OF THE FOLLOWING:

1. NO. 15 FELT COMPLYING WITH ASTM D226, TYPE 1.

2. ASTM E2568, TYPE 1 OR 2.

3. ASTM E331 IN ACCORDANCE WITH SECTION R703.11.

4. OTHER APPROVED MATERIALS IN ACCORDANCE WITH THE MANUFACTURER'S INSTALLATION INSTRUCTIONS.
NO. 15 ASPHALT FELT AND WATER-RESISTIVE BARRIERS COMPLYING WITH ASTM E2556 SHALL BE APPLIED HORIZONTALLY, WITH THE UPPER LAYER LAPPED OVER THE LOWER LAYER NOT LESS THAN 2 INCHES (51MM), AND WHERE JOINTS OCCUR, SHALL BE LAPPED NOT LESS THAN 6 INCHES (152 MM).

R703.7.3 WATER-RESISTIVE BARRIERS WATER-RESISTIVE BARRIERS SHALL BE INSTALLED AS REQUIRED IN SECTION R703.2 AND, WHERE APPLIED OVER WOOD-BASED SHEATHING, SHALL INCLUDE A WATER-RESISTIVE VAPOR-PERMEABLE BARRIER WITH A PERFORMANCE AT LEAST EQUIVALENT TO TWO LAYERS OF GRADE D PAPER. THE INDIVIDUAL LAYERS SHALL BE INSTALLED INDEPENDENTLY SUCH THAT EACH LAYER PROVIDES A SEPARATE CONTINUOUS PLANE AND ANY FLASHING (INSTALLED IN ACCORDANCE WITH SECTION R703.4) INTENDED TO DRAIN TO THE WATER-RESISTIVE BARRIER IS DIRECTED BETWEEN THE LAYERS.

EXCEPTION: WHERE THE WATER-RESISTIVE BARRIER THAT IS APPLIED OVER WOOD-BASED SHEATHING HAS A WATER RESISTANCE EQUAL TO OR GREATER THAN THAT OF 60-MINUTE GRADE D PAPER AND IS SEPARATED FROM THE STUCCO BY AN INTERVENING, SUBSTANTIALLY NONWATER-ABSORBING LAYER OR DESIGNED DRAINAGE SPACE.

R703.4 FLASHING. APPROVED METAL FLASHING, VINYL FLASHING, SELF-ADHERED MEMBRANES AND MECHANICALLY ATTACHED FLEXIBLE FLASHING SHALL BE APPLIED SHINGLE-FASHION OR IN ACCORDANCE WITH THE MANUFACTURER'S INSTRUCTIONS. METAL FLASHING SHALL BE CORROSION RESISTANT. FLUID-APPLIED MEMBRANES USED AS FLASHING SHALL BE APPLIED IN ACCORDANCE WITH THE MANUFACTURER'S INSTRUCTIONS. ALL FLASHING SHALL BE APPLIED IN A MANNER TO PREVENT THE ENTRY OF WATER INTO THE WALL CAVITY OR PENETRATION OF WATER TO THE BUILDING STRUCTURAL FRAMING COMPONENTS. SELF-ADHERED MEMBRANES USED AS FLASHING SHALL COMPLY WITH AAMA 711. ALL EXTERIOR FENESTRATION PRODUCTS SHALL BE SEALED AT THE JUNCTURE WITH THE BUILDING WALL WITH A SEALANT COMPLYING WITH AAMA 800 OR ASTM C920 CLASS 25 GRADE NS OR GREATER FOR PROPER JOINT EXPANSION AND CONTRACTION, ASTMC1281, AAMA 812, OR OTHER APPROVED STANDARD AS APPROPRIATE FOR THE TYPE OF SEALANT. FLUID-APPLIED MEMBRANES USED AS FLASHING IN EXTERIOR WALLS SHALL COMPLY WITH AAMA 714. THE FLASHING SHALL EXTEND TO THE SURFACE OF THE EXTERIOR WALL FINISH. APPROVED FLASHINGS SHALL BE INSTALLED AT THE FOLLOWING LOCATIONS:

1. EXTERIOR WINDOW AND DOOR OPENINGS. FLASHING AT EXTERIOR WINDOW AND DOOR OPENINGS SHALL EXTEND TO THE SURFACE OF THE EXTERIOR WALL FINISH OR TO THE WATER-RESISTIVE BARRIER COMPLYING WITH SECTION 703.2 FOR SUBSEQUENT DRAINAGE. MECHANICALLY ATTACHED FLEXIBLE FLASHINGS SHALL COMPLY WITH AAMA 712. FLASHING AT EXTERIOR WINDOW AND DOOR OPENINGS SHALL BE INSTALLED IN ACCORDANCE WITH ONE OR MORE OF THE FOLLOWING:
   - 1.1 THE FENESTRATION MANUFACTURER'S INSTALLATION AND FLASHING INSTRUCTIONS, OR FOR APPLICATIONS NOT ADDRESSED IN THE FENESTRATION MANUFACTURER'S INSTRUCTIONS, IN ACCORDANCE WITH THE FLASHING OR WATER-RESISTIVE BARRIER MANUFACTURER'S INSTRUCTIONS. WHERE FLASHING INSTRUCTIONS OR DETAILS ARE NOT PROVIDED, PAN FLASHING SHALL BE INSTALLED AT THE SILL OF EXTERIOR WINDOW AND DOOR OPENINGS. PAN FLASHING SHALL BE SEALED OR SLOPED IN SUCH A MANNER AS TO DIRECT WATER TO THE SURFACE OF THE EXTERIOR WALL FINISH OR TO THE WATER RESISTIVE BARRIER FOR SUBSEQUENT DRAINAGE. OPENINGS USING PAN FLASHING SHALL INCORPORATE FLASHING OR PROTECTION AT THE HEAD AND SIDES.
   - 1.2 IN ACCORDANCE WITH THE FLASHING DESIGN OR METHOD OF A REGISTERED DESIGN PROFESSIONAL.
   - 1.3 IN ACCORDANCE WITH OTHER APPROVED METHODS.
   - 1.4 IN ACCORDANCE WITH FMA/AAMA 100, FMA/ AAMA 200, FMA/WDMA 250, FMA/AAMA/ WDMA 300 OR FMA/AAMA/WDMA 400 OR FMA/AAMA/WDMA 2710.
2. AT THE INTERSECTION OF CHIMNEYS OR OTHER MASONRY CONSTRUCTION WITH FRAME OR STUCCO WALLS, WITH PROJECTING LIPS ON BOTH SIDES UNDER STUCCO COPINGS.
3. UNDER AND AT THE ENDS OF MASONRY, WOOD OR METAL COPINGS AND SILLS.
4. CONTINUOUSLY ABOVE ALL PROJECTING WOOD TRIM.
5. WHERE EXTERIOR PORCHES, DECKS OR STAIRS ATTACH TO A WALL OR FLOOR ASSEMBLY OF WOOD-FRAME CONSTRUCTION.
6. AT WALL AND ROOF INTERSECTIONS.
7. AT BUILT-IN GUTTERS.

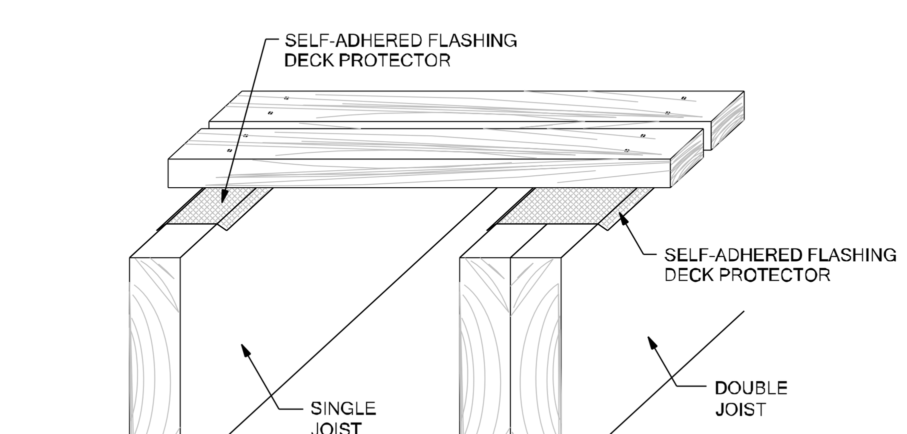

②

SELF-ADHERED FLASHING
\H0.8362x;DECK JOIST

WP07

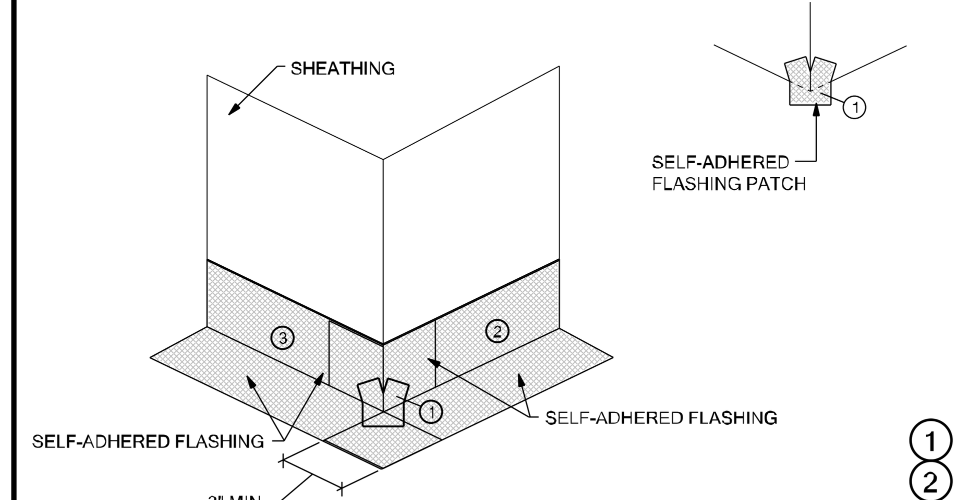

① ② ④ ⑤

SELF-ADHERED FLASHING
OUTSIDE CORNER

WP08

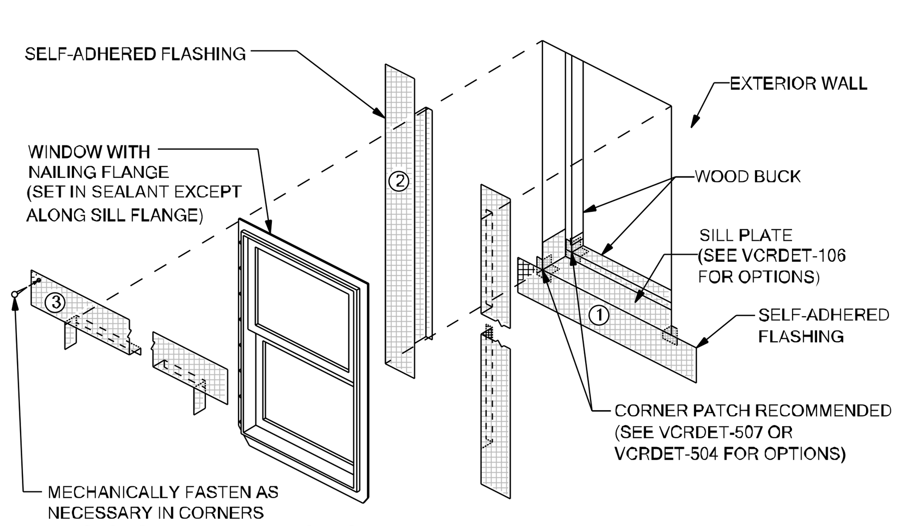

NOTES:
1. INSTALL WINDOW PER MANUFACTURER'S RECOMMENDATION AND USE APPROPRIATE SEALANT FOR WINDOW AND WOOD BUCK
2. WEATHER RESISTIVE BARRIER TO FORM WATER-SHEDDING LAPS.

RECESSED WINDOW

WP10

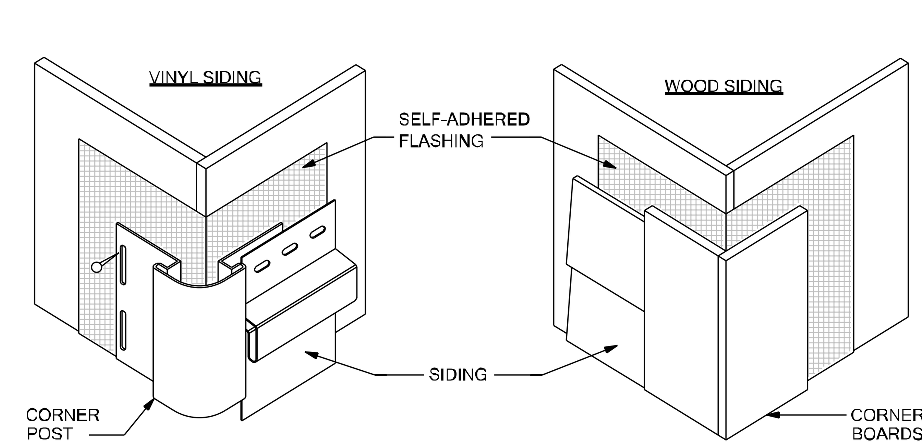

NOTES:
1. EXTEND SELF-ADHERED FLASHING BEYOND JOINT BETWEEN SIDING AND CORNER POST/BOARDS.
2. INSTALL SELF-ADHERED FLASHING ON OUTSIDE CORNER FOR THE HEIGHT OF THE WALL.

WALL-TO-WALL OUTSIDE CORNER

WP11

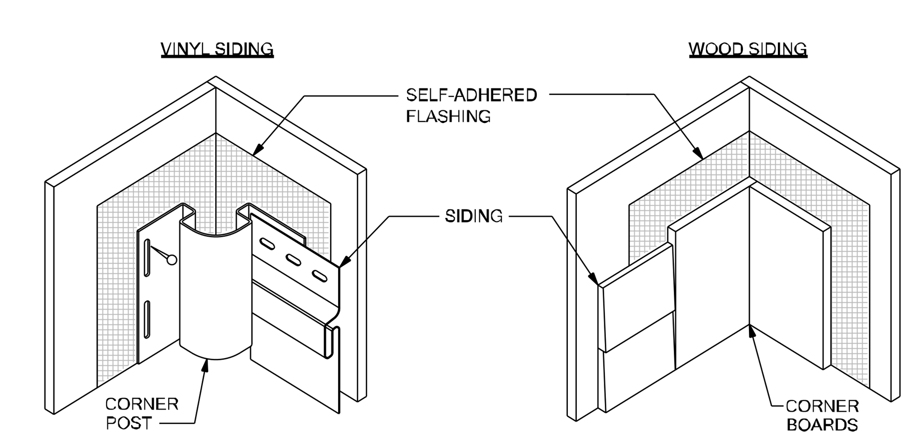

NOTES:
1. EXTEND SELF-ADHERED FLASHING BEYOND JOINT BETWEEN SIDING AND CORNER POST/BOARDS.
2. INSTALL SELF-ADHERED FLASHING ON OUTSIDE CORNER FOR THE HEIGHT OF THE WALL.

WALL-TO-WALL INSIDE CORNER

WP12

FIGURE 1: FLASHING INSTALLATION

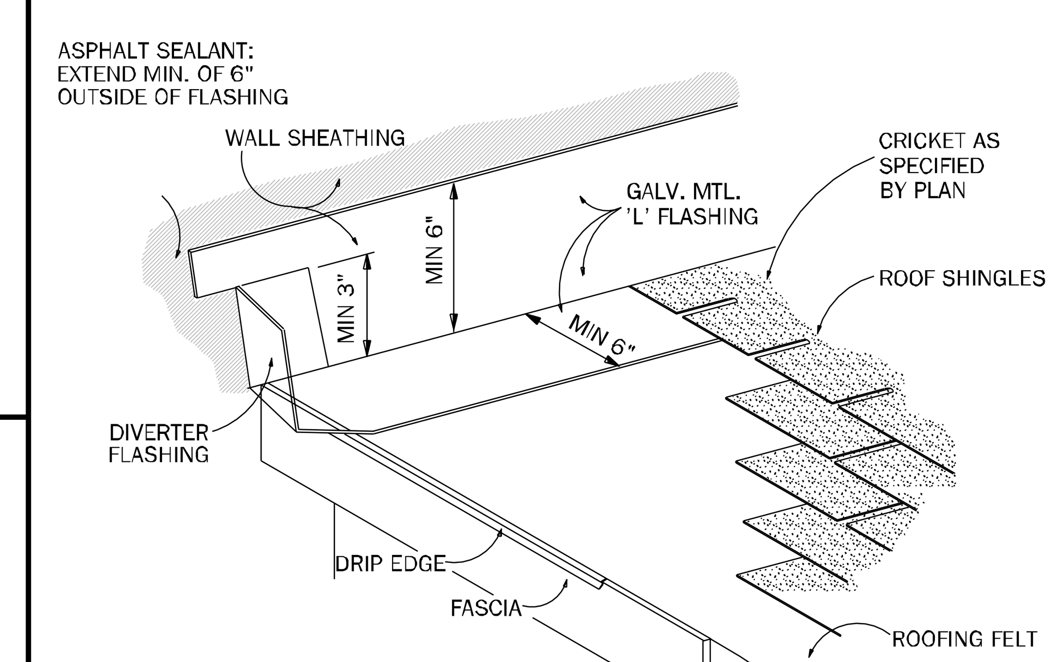

FIGURE 2: WALL FINISH

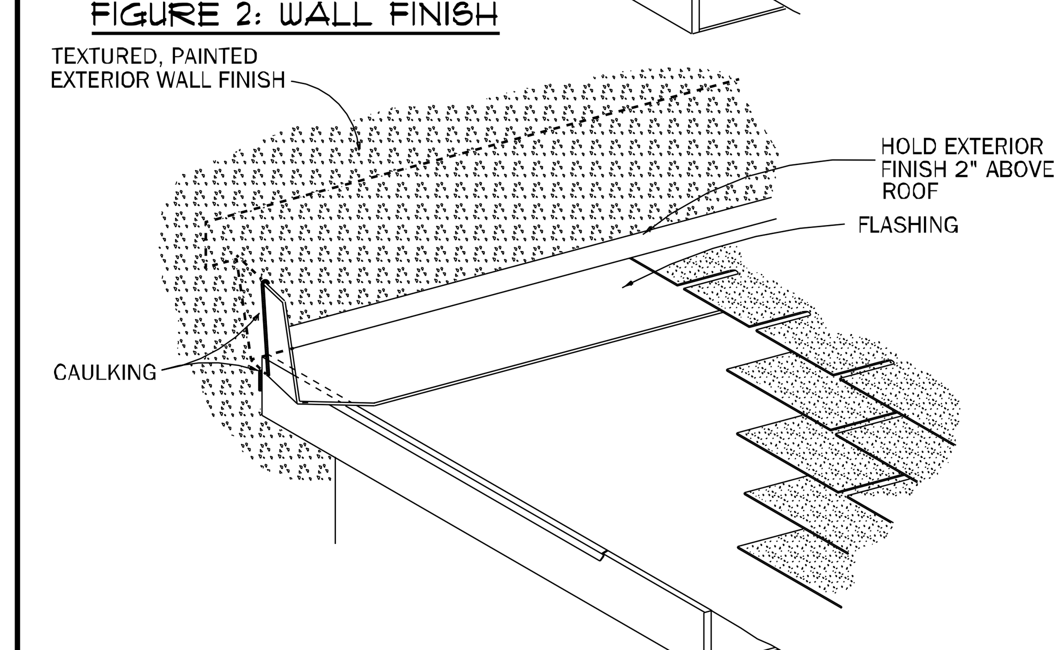

FLASHING INSTALLATION
WHERE ROOF MEETS VERTICAL WALL

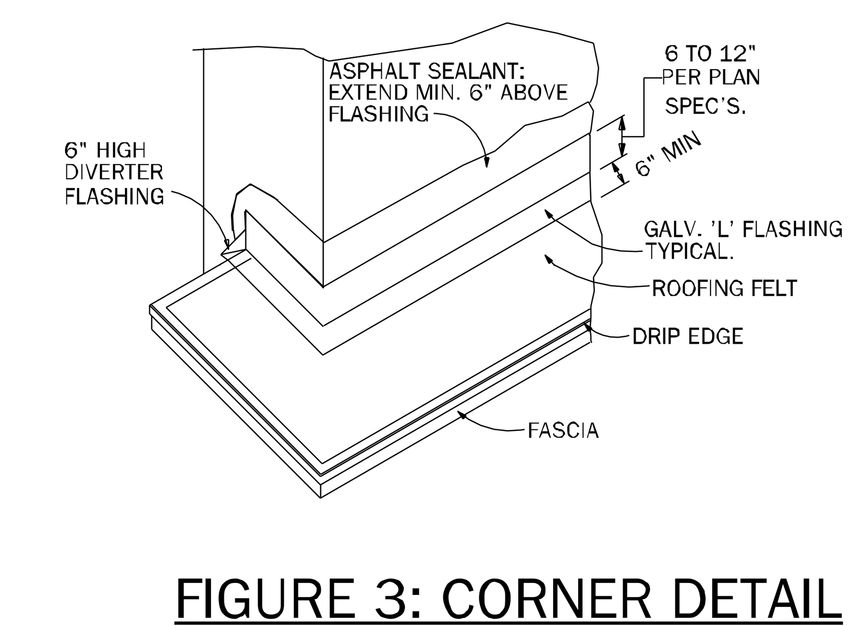

FIGURE 3: CORNER DETAIL

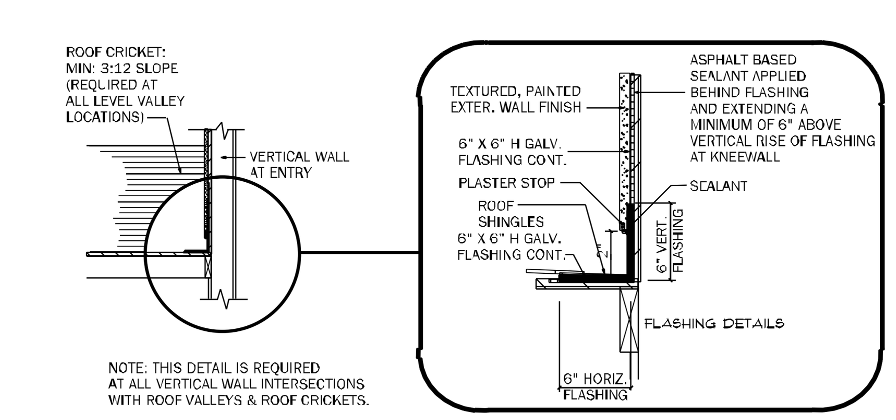

FLASHING DETAIL AT CRICKET
/ KNEEWALL INTERSECTION

TOTAL SOLUTIONS GROUP
258 Southhall Lane, Suite 200
Maitland, Florida, 32751
(407) 800-2333
CARL A. BROWN, PE - FL # 56126
SCOTT LEWKOWSKI, PE - FL #78750
100% Employee Owned
myTSGhome.com
CA No. 9161 AA26003115

Making Dreams Come True

MUNICIPAL STAMP AREA

SIGNATURE & SEAL
7/30/2025

CARL A. BROWN LICENSE No 56126 STATE OF FLORIDA PROFESSIONAL ENGINEER

To the best of the Engineer's knowledge, information and belief, the structural plans and specifications contain within these drawings comply with the 2023 Florida Building Code- Residential 8th Edition. Engineer's signature and seal is only for the structural engineering portions of the drawing pages bearing engineer's signature and seal.

Builder: ADAMS HOMES
FLORIDA CONTRACTORS LICENSE NO. CRC1330146
100 WEST GARDEN STREET
PENSACOLA FL 32502

Division Location: GAINESVILLE

LOT: 38
BLK:
UNIT:
Community: The Preserve at Laurel Lake
Plan Name: 1970
Project Address: 581 SW Bellflower Dr. Lake City, FL
Client No.:

Project No: 25-07823
Sheet No: WP
WATER PROOF DETAILS