These drawings, as instruments of service, are the sole property of the architect, and may not be used, copied or reproduced in whole or in part for use on or incorporated within any other job without specific and individual authorization by the architect.

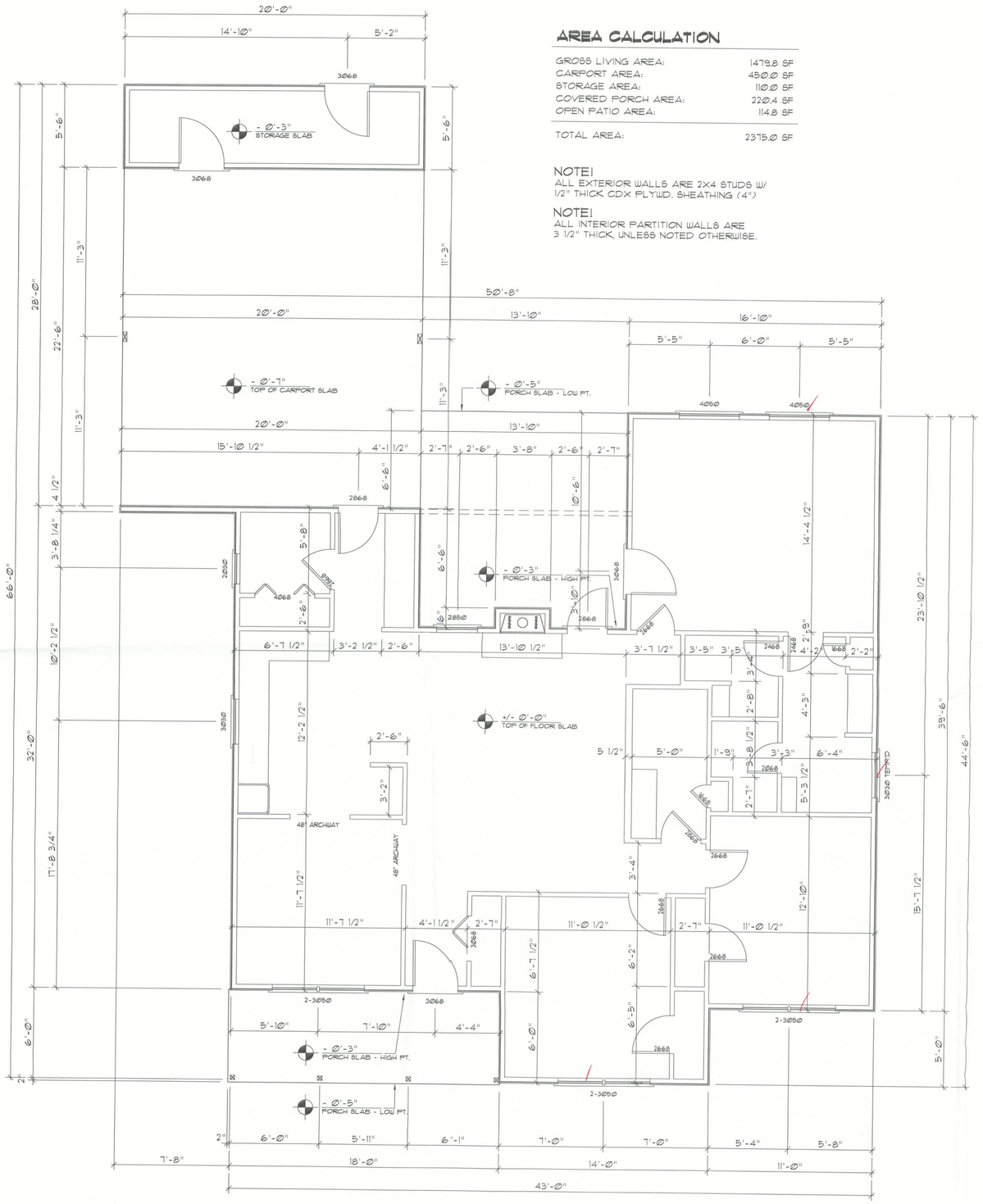

Dimension PLAN

SCALE: 1/4" = 1'-0"

AREA CALCULATION

GROSS LIVING AREA:	1479.8 SF
CARPORT AREA:	450.0 SF
STORAGE AREA:	110.0 SF
COVERED PORCH AREA:	220.4 SF
OPEN PATIO AREA:	114.8 SF
TOTAL AREA:	2375.0 SF

NOTE!
ALL EXTERIOR WALLS ARE 2X4 STUDS W/ 1/2" THICK CDX PLYWD. SHEATHING (4")

NOTE!
ALL INTERIOR PARTITION WALLS ARE 3 1/2" THICK, UNLESS NOTED OTHERWISE.

APPLIANCE SPECIFICATIONS

MODELS: GRD 5500-2, GHC 5500-2

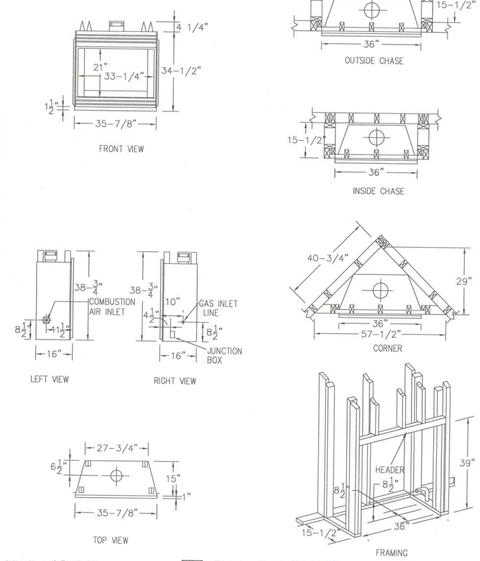

FRAMING SPECIFICATIONS

NOTE: FRAMING DIMENSIONS ARE CALCULATED FOR A NAILING FLANGE DEPTH OF 1/2"

SCALE: 3/8"=1'-0"

SUPERIOR.

F.P. Framing DET'S

SCALE: 3" = 1'-0"

A

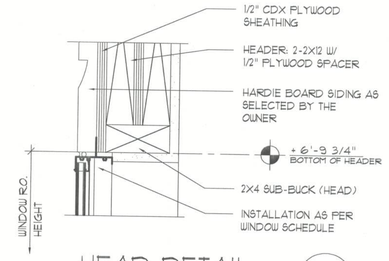

HEAD DETAIL MTL. SASH

1

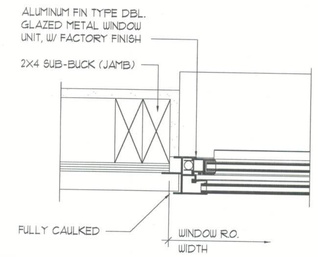

JAMB DETAILS MTL. SASH

2

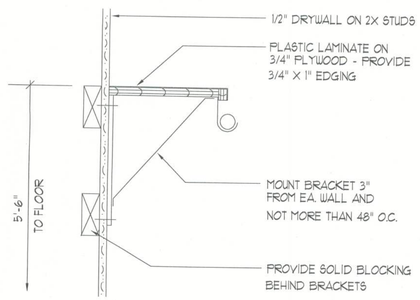

Closet Rod & Shelf Detail

SCALE: NONE

B

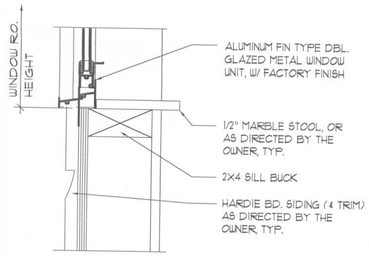

SILL DETAIL MTL. SASH

3

Typ. Window DET'S

SCALE: 3" = 1'-0"

C

REVISION:

Copyright 2005 © N.P. Geisler, Architect

DRAWN: rpg

CUSTOM RESIDENTIAL DESIGN for:
C&S CONSTRUCTION, INC.
LAKE CITY, FLORIDA
DIMENSION PLAN

C & S CONSTRUCTION
Lic. #RC0026502
704 S. ERIANE STREET · LAKE CITY, FLORIDA 32025
RICHARD COX · 386-755-7200

NICHOLAS PAUL GEISLER ARCHITECT
N.C.A.R.B. Certified
1758 NW Brown Rd.
Lake City, FL 32055
386-755-9021

DATE: 05 NOV 2005

COMM: 2K549

SHEET: A.4

4 OF 8

16 NOV 2005

AR0007005