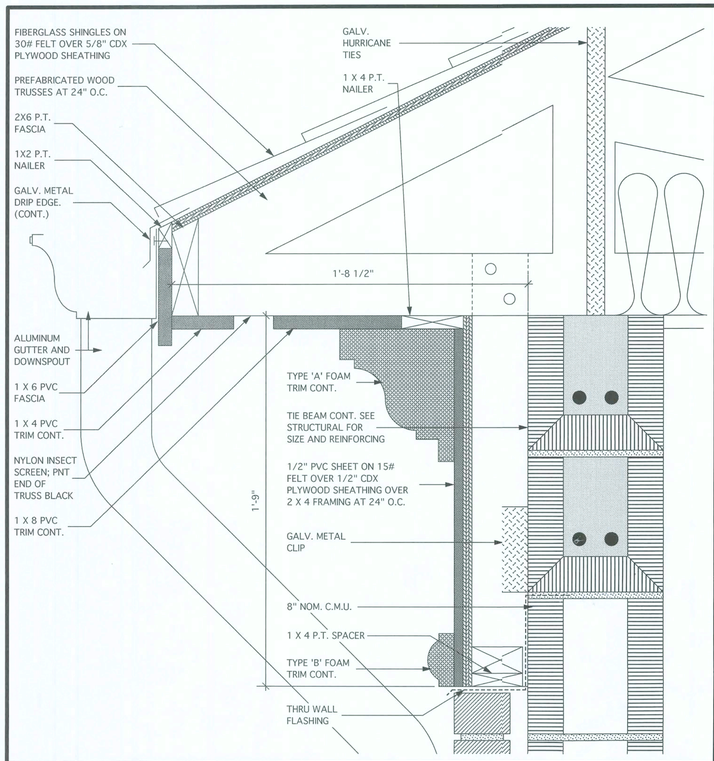

1 DETAIL - ROOF EAVE

SCALE: 3" = 1'-0"

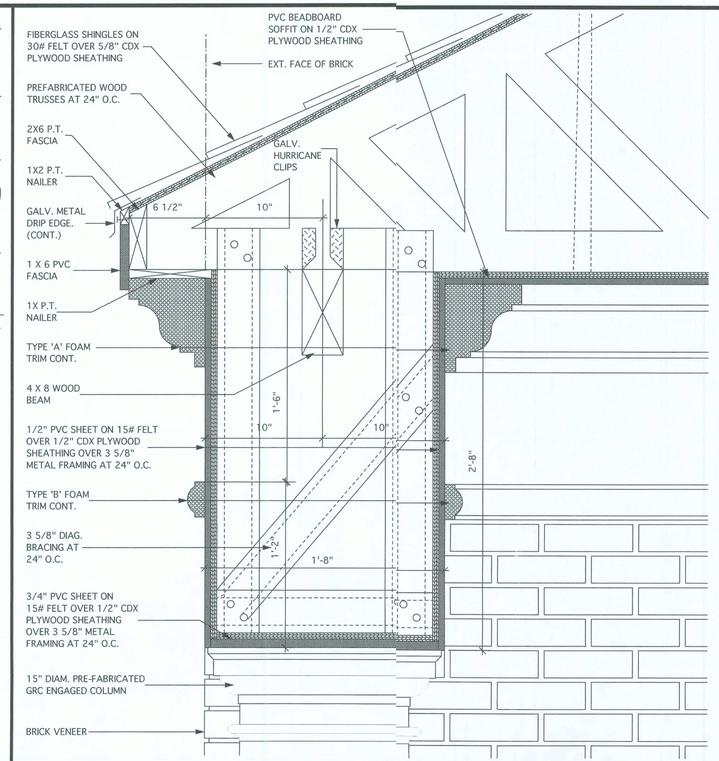

2 DETAIL - ROOF EAVE

SCALE: 2" = 1'-0"

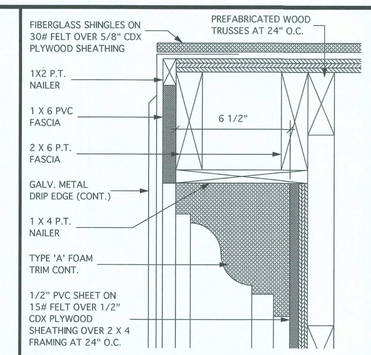

3 DETAIL - GABLE END

SCALE: 3" = 1'-0"

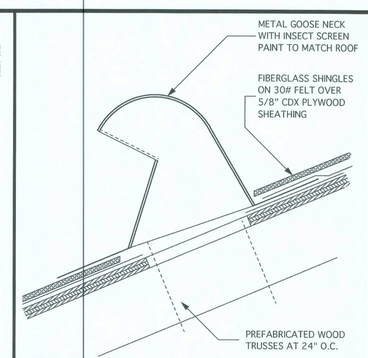

4 DETAIL - GOOSENECK

SCALE: 3" = 1'-0"

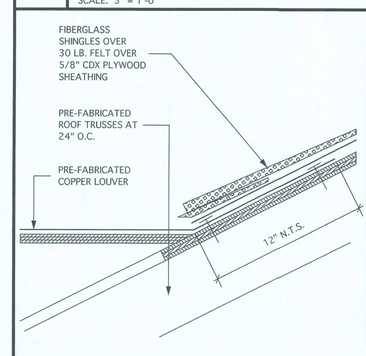

5 DETAIL - LOUVERED DORMER

SCALE: 3" = 1'-0" AT TOP OF LOUVER

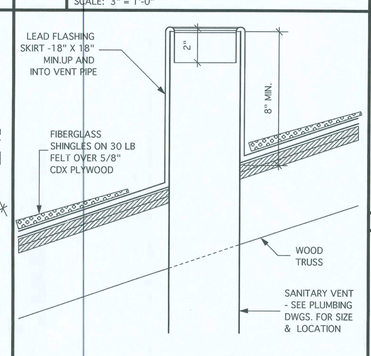

6 DETAIL - VENT THRU ROOF

SCALE: 3" = 1'-0"

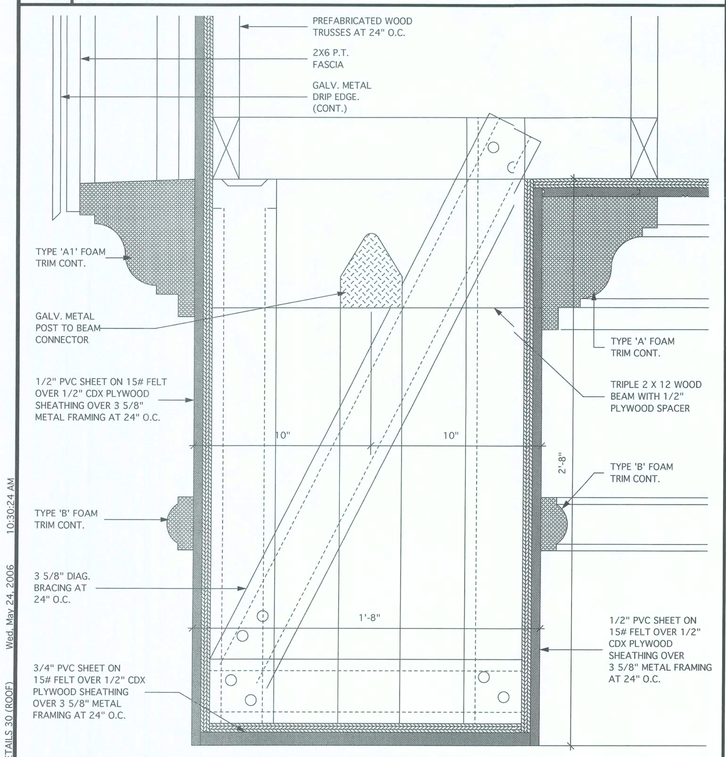

7 DETAIL - ROOF EAVE

SCALE: 3" = 1'-0"

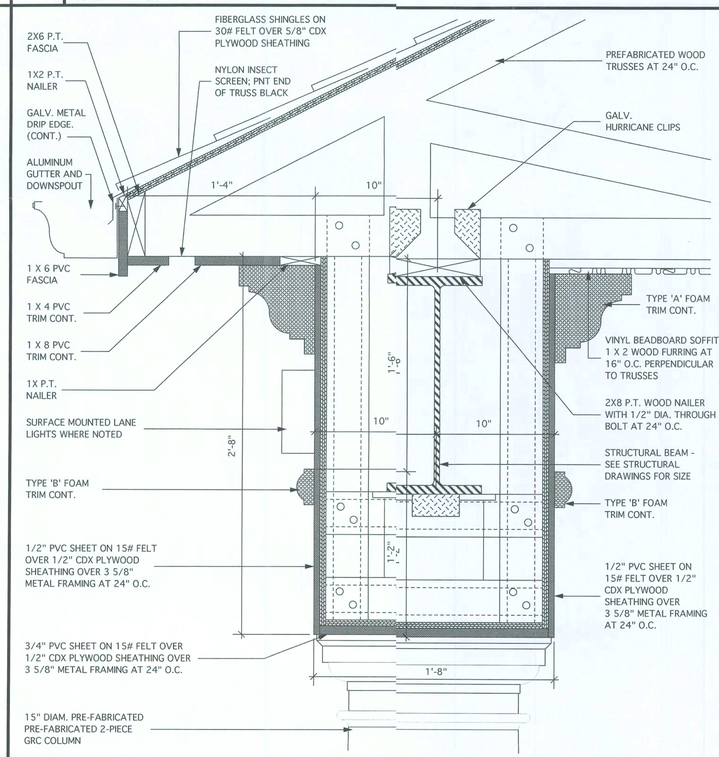

8 DETAIL - ROOF EAVE

SCALE: 2" = 1'-0"

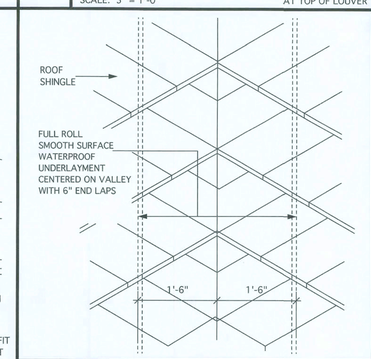

9 DETAIL - ROOF VALLEY - CLOSED

SCALE: 3/4" = 1'-0"

10

11

12

DESIGN SERVICES INCORPORATED
1778 N. PARK AVENUE, SUITE 100, MAITLAND, FL 32751,
TELEPHONE(407) 629-5755
LICENSE NO. F00061
ARCHITECTURE
INTERIOR DESIGN
SPACE PLANNING

WEST OFFICE
(NEW BRANCH BANK)
LAKE CITY, FLORIDA

PEOPLES STATE BANK

GENERAL NOTES

FASTENERS NOTES:

METAL STUD TO METAL STUD - MIN. 2 - NO. 10 PAI HEAD SELF TAPPING SCREWS AT EACH JOINT

METAL STUD TO CONCRETE - HILTI - DNI 22P8 POWIR ACTUATED FASTENERS AT 12" O.C. AT CONTINUOUS TRACKS OR MIN. 2 AT EACH JINT - PROVIDE 1 1/4" PENETRATION

METAL STUD TO WOOD - NO. 10 FLAT HEAD COUNERSUNK SELF TAPPING SCREWS AT 12 O.C. AT CONTINUOUS TRACKS OR MIN. 2 AT EAH JOINT - PROVIDE 1 1/4" PENETRATION

PLYWOOD TO METAL STUD - NO. 10 FLAT HEAD CUNTERSUNK SELF TAPPING SCREWS AT 6" O.C. AT EDGES 12" O.C. INTERMEDIATE

2 X WOOD TO 2 X WOOD - STUD TO PLATE - TOE NAIL - 4- 8d COMMON STUD TO PLATE - FACE - 2 - 16d - COMMON STUD TO STUD -FACE - 2 - 16d COMMON

2 X WOOD TO CONCRETE - 1/4" TAPCONS AT 12" I.C. AT CONTINUOUS TRACKS OR MIN. 2 AT EACH JOINT - PROVIDE 1" PENETRATION

PLYWOOD TO 2 X WOOD - 8d COMMON 6" O.C. AT DGES, 12" O.C. INTERMEDIATE

THE DESIGN, DRAWINGS, AND SPECIFICATIONS ICORPORATED HEREIN AS AN INSTRUMENT OF PROFESSIONAL SERVICES ARE, IND SHALL BE THE SOLE PROPERTY OF DSI DESIGN SERVICES INC.. THEY ARE NOT TO USED ON ANY OTHER PROJECT OR FOR ANY OTHER PURPOSE WITHOUT SPECIFIC WRITTEN PERMISSION. ALL RIGHTS RESERVED.

1 2 3 4

INTERIOR ELEVATION KEY

NORTH
ACTUAL
PLAN

MARK	DATE	RIVISIONS

COMM. NO:	06003.00	DRAWN:	KLP
DATE:	02/15/06	CHECKED:	ELM
SCALE:	AS NOTED		
FILE:	06003.00-DETAILS 30 (ROOF)		

DETAILS

SEAL

ARCHITECT/CONSULTANT
EDDIE L. MUSE
JUN 07 2006
LICENSE NO. AR-12112

SHEET NUMBER
A-8.30

06003.00-DETAILS 30 (ROOF) Wed, May 24, 2006 10:30:24 AM

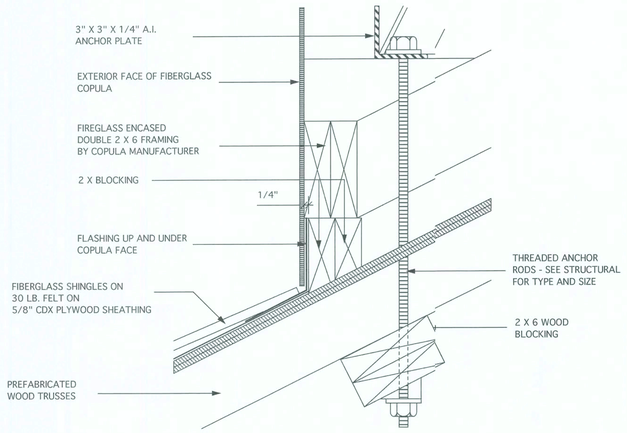

1 DETAIL - COPULA FLASHING

SCALE: 3" = 1'-0"

2 3 4 5 6 7 8 9 10 11 12 13 14 15 16 17 18 19 20 21

DESIGN SERVICES INCORPORATED
1778 N. PARK AVENUE, SUITE 100, MAITLAND, FL 32751,
TELEPHONE(407) 629-5755
LICENSE NO. F00061
ARCHITECTURE
INTERIOR DESIGN
SPACE PLANNING

WEST OFFICE
(NEW BRANCH BANK)
LAKE CITY, FLORIDA

PEOPLES STATE BANK

GENERAL NOTES

FASTENERS NOTES:

METAL STUD TO METAL STUD - MIN. 2 - NO. 1) PAN HEAD SELF TAPPING SCREWS AT EACH JOINT

METAL STUD TO CONCRETE - HILTI - DNI 22PBPOWER ACTUATED FASTENERS AT 12" O.C. AT CONTINUOUS TRACKS OR MIN. 2 AT EACH JOINT - PROVIDE 1 1/4" PENETRATION

METAL STUD TO WOOD - NO. 10 FLAT HEAD COUNTERSUNK SELF TAPPING SCREWS AT 12 O.C. AT CONTINUOUS TRACKS OR MIN. 2 A' EACH JOINT - PROVIDE 1 1/4" PENETRATION

PLYWOOD TO METAL STUD - NO. 10 FLAT HEAD COUNTERSUNK SELF TAPPING SCREWS AT 6" O.C. AT EDGES 12" O.C. INTERMEDIATE

2 X WOOD TO 2 X WOOD - STUD TO PLATE - 'DE NAIL - 4- 8d COMMON STUD TO PLATE - FACE - 2 - 16d - COMMON STUD TO STUD - FACE - 2 - 16d COMMON

2 X WOOD TO CONCRETE - 1/4" TAPCONS AT12" O.C. AT CONTINUOUS TRACKS OR MIN. 2 AT EACH JOINT - PROVIDE 1" PENETRATION

PLYWOOD TO 2 X WOOD - 8d COMMON 6" O.C AT EDGES, 12" O.C. INTERMEDIATE

THE DESIGN, DRAWINGS, AND SPECIFICATINS INCORPORATED HEREIN AS AN INSTRUMENT OF PROFESSIONAL SERVICES ARE, AND SHALL BE THE SOLE PROPERTY OF DSI DESIGN SERVICES INC... HEY ARE NOT TO USED ON ANY OTHER PROJECT OR FOR ANY OTHER PURPSE WITHOUT SPECIFIC WRITTEN PERMISSION. ALL RIGHTS RESERVED.

1 2 3 4

INTERIOR ELEVATION KEY

NORTH
ACTUAL
PLAN

MARK	DATE	REVISIONS

COMM. NO:	06003.00	DRAWN:	KLP
DATE:	02/15/06	CHECKED:	ELM
SCALE:	AS NOTED		
FILE:	06003.00-DETAILS 31 (ROOF).mcd		

DETAILS

ROOF

SEAL

ARCHITECT/CONSULTANT

EDDIE L. MUSE
JUN 07 2006
LICENSE NO. AR-12112

SHEET NUMBER

A-8.31

06003.00-DETAILS 31 (ROOF).mcd Wed, May 24, 2006 10:41:25 AM

1 FIRE RATED WALL PENETRATION SYSTEMS

NO SCALE

SYSTEM NO. W-L-1001

F RATINGS - 1, 2, 3 AND 4 HR (SEE ITEMS 2 AND 3)
T RATINGS - 0, 1, 2, 3 AND 4 HR (SEE ITEM 3)
L RATING AT AMBIENT - LESS THAN 1 CFM/SQ FT
L RAING AT 400 F - LESS THAN 1 CFM/SQ FT

1. WALL ASSEMBLY - THE 1, 2, 3, OR 4 HR FIRE-RATED GYPSUM WALLBOARD/STUD WALL ASSEMBLY SHALL BE CONSTRUCTED OF THE MATERIALS AND IN THE MANNER DESCRIBED IN THE INDIVIDUAL U300 OR U400 SERIES WALL OR PARTITION DESIGNS IN THE UL FIRE RESISTANCE DIRECTORY AND SHALL INCLUDE THE FOLLOWING CONSTRUCTION FEATURES:

   A. STUDS - WALL FRAMING MAY CONSIST OF EITHER WOOD STUDS (MAX 2 HR FIRE RATED ASSEMBLIES) OR STEEL CHANNEL STUDS. WOOD STUDS TO CONSIST OF NOM 2 BY 4 IN. LUMBER SPACED 16 IN. OC WITH NOM 2 BY 4 IN. LUMBER END PLATES AND CROSS BRACES. STEEL STUDS TO BE MIN. 3-5/8 IN. WIDE BY 1-3/8 IN. DEEP CHANNELS SPACED MAX 24 IN. OC.

   B. WALLBOARD, GYPSUM* - NOM 1/2 OR 5/8 IN. THICK, 4 FT. WIDE WITH SQUARE OR TAPERED EDGES. THE GYPSUM WALLBOARD TYPE, THICKNESS, NUMBER OF LAYERS, FASTENER TYPE AND SHEET ORIENTATION SHALL BE AS SPECIFIED IN THE INDIVIDUAL U300 OR U400 SERIES DESIGN IN THE UL FIRE RESISTANCE DIRECTORY. MAX. DIA.M OF OPENING IS 13-1/2 IN.

2. PIPE OR CONDUIT - NOM 1/2 IN. DIAM (OR SMALLER) SCHEDULE 10 (OR HEAVIER) STEEL PIPE, NOM 1/2 IN. DIAM (OR SMALLER) SERVICE WEIGHT (OR HEAVIER) CAST IRON SOIL PIPE, NOM 12 IN. DIAM (OR SMALLER) CLASS 50 (OR HEAVIER) DUCTILE IRON PRESSURE PIPE, NOM 6 IN. DIAM (OR SMALLER) STEEL CONDUIT, NOM 4 IN. DIAM (OR SMALLER) STEEL ELECTRICAL METAL TUBING, NOM 6 IN. DIAM (OR SMALLER) TYPE L (OR HEAVIER) COPPER TUBING OR NOM 1 IN. DIAM (OR SMALLER) FLEXIBLE STEEL CONDUIT. WHEN COPPER PIPE IS USED, MAX F RATING OF FIRESTOP SYSTEM (ITEM 3) IS 2 H. STEEL PIPES OR CONDUITS LARGER THAN NOM 4 IN. DIAM MAY ONLY BE USED IN WALLS CONSTRUCTED USING STEEL CHANNEL STUDS. A MAX OF ONE PIPE OR CONDUIT IS PERMITTED IN THE FIRESTOP SYSTEM. PIPE OR CONDUIT TO BE INSTALLED NEAR CENTER OF STUD CAVITY WIDTH AN TO BE RIGIDLY SUPPORTED ON BOTH SIDES OF WALL ASSEMBLY.

3. FILL, VOID OR CAVITY MATERIAL* - CAULK - CAULK FILL MATERIAL INSTALLED TO COMPLETELY FILLANILAR SPACE BETWEEN PIPE OR CONDUIT AND GYPSUM WALLBOARD ANDITH A MIN 1/4 IN. DIAM BEAD OF CAULK APPLIED TO PERIMETER OF PIPE OR CONDT AT ITS EGRESS FROM THE WALL. CAULK INSTALLED SYMMETRICALLY ON BOTH SIDES OWALL ASSEMBLY. THE HOURLY F RATING OF THE FIRESTOP SYSTEM IS DEPENDENT UPN THE HOURLY FIRE RATING OF THE WALL ASSEMBLY IN WHICH IT IS INSTALLED, ASHOWN IN THE FOLLOWING TABLE. THE HOURLY T RATING OF THE FIRESTOP SYSTEN DEPENDENT UPON THE TYPE OR SIZE OF THE PIPE OR CONDUIT AND THE HOURLIRE RATING OF THE WALL ASSEMBLY IN WHICH IT IS INSTALLED, AS TABULATED BELO

NK PIPE OR,NOUT DM, IN.	ANNULAR SPACE, IN.	F RATING, HR	T RATING, HR
1	0 TO 3/16	1 OR 2	0+, 1 OR 2
1	1/4 TO 1/2	3 OR 4	3 OR 4
4	0 TO 1/4	1 OR 2	0
4	0 TO 1 1/2#	1 OR 2	0
6	1/4 TO 1/2	3 OR 4	0
12	3/16 TO 3/8	1 OR 2	0

+WHEN COPPER PIPE USE, T RATING IS 0 H.
#0 TO 1 1/2 IN. ANNLAR SPACE APPLIES ONLY WHEN TYPE CP-25 WB+ CAULK IS USED AND ONLY WHEN THMN THICKNESS OF THE GYPSUM WALLBOARD IS 5/8 IN. FOR 1 HR. RATED WALLS AND 1/4 IN. FOR 2 HR RATED WALLS

MINNESOTA MINING &MFG. CO. - CP 25WB+
*BEARING UL CLASSCATION MARKING

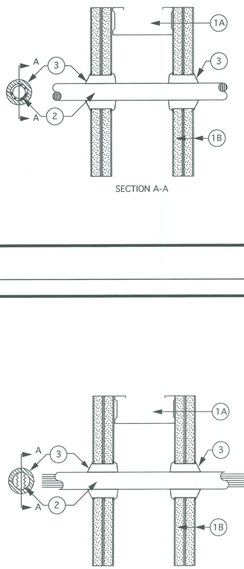

SECTION A-A

2 FIRE RATED WALL PENETRATION SYSTEMS

NO SCALE

SYSTEM NO. W-L-2088

F RATINGS - 1 & 2 HR (SEE ITEM 1)
T RATINGS - 0, 1, & 2 (SEE ITEM 2)

1. WALL ASSEMBLY - THE 1 OR 2 HR FIRE-RATED GYPSUM WALLBOARD/STUD WALL ASSEMBLY SHALL BE CONSTRUCTED OF THE MATERIALS AND IN THE MANNER DESCRIBED IN THE INDIVIDUAL U300 OR U400 SERIES WALL OR PARTITION DESIGNS IN THE UL FIRE RESISTANCE DIRECTORY AND SHALL INCLUDE THE FOLLOWING CONSTRUCTION FEATURES:

   A. STUDS - WALL FRAMING MAY CONSIST OF EITHER WOOD STUDS (MAX 2 HR FIRE RATED ASSEMBLIES) OR STEEL CHANNEL STUDS. WOOD STUDS TO CONSIST OF NOM 2 BY 4 IN. LUMBER SPACED 16 IN. OC. STEEL STUDS TO BE MIN. 3-1/2 IN. WIDE AND SPACED MAX 24 IN. OC.

   B. WALLBOARD, GYPSUM* - THICKNESS, TYPE, NUMBER OF LAYERS AND FASTENERS AS REQUIRED IN THE INDIVIDUAL WALL AND PARTITION DESIGN. DIAMETER OF OPENING SHALL BE 7/8 IN. LARGER THAN THE OUTSIDE DIAMETER PIPE OR CONDUIT (ITEM 2).

   THE HOURLY F RATING OF THE FIRESTOP SYSTEM IS EQUAL TO THE HOURLY FIRE RATING OF THE WALL ASSEMBLY IN WHICH IT IS INSTALLED.

2. THROUGH PENTRANTS - ONE NONMETALIC PIP OR CONDUIT TO BE INSTALLED EITHER CONCENTRICALLY OR ECCENTRICALLY WITHIN THE FIRESTOP SYSTEM. THE ANNULAR SPACE BETWEEN PIPE OR CONDUIT AND PERIPHERY OF OPENING FOR NOM 1 1/4 IN. DIAMETER (OR SMALLER) PIPE OR CONDUIT SHALL BE 0 IN. (POINT CONTACT) TO MAX. 7/8 IN. THE ANNULAR SPACE FOR PIPE OR CONDUIT GREATER THAN NOM. 1 1/4 IN. DIAMETER SHALL MIN. 1/2 IN. TO MAX. 1 IN. PIPE OR CONDUIT TO BE RIGIDLY SUPPORTED ON BOTH SIDES OF WALL ASSEMBLY. THE FOLLOWING TYPES AND SIZES OF NON METALLIC PIPES OR CONDUITS MAY BE USED:

   A. POLYVINYL CHLORIDE (PVC) - NOM. 2 IN. DIAMETER (OR SMALLER) SCHEDULE 40 SOLID CORE PVC PIPE FOR USE IN CLOSED (PROCESS OR SUPPLY) OR VENTED (DRAIN, WASTE OR VENT) PIPING SYSTEM.

   B. CHLORINATED POLYVINYL CHLORIDE (CPVC) PIPE - NOM. 2 IN. DIAMETER (OR SMALLER) SDR17 CPVC PIPE FOR USE IN CLOSED (PROCESS OR SUPPLY) OR VENTED (DRAIN, WASTE, OR VENT) PIPING SYSTEM.

   C. POLYVINYL CHLORIDE (PVC) - NOM. 3 IN. DIAMETER (OR SMALLER) SCHEDULE 40 SOLID CORE PVC PIPE FOR USE IN CLOSED (PROCESS OR SUPPLY) PIPING SYSTEMS.

   D. CHLORINATED POLYVINYL CHLORIDE (CPVC) PIPE - NOM. 3 IN. DIAMETER (OR SMALLER) SDR17 CPVC PIPE FOR USE IN CLOSED (PROCESS OR SUPPLY) PIPING SYSTEMS.

   E. RIGID NONMETALLIC CONDUIT++ - NOM. 3 IN. DIAMEER (OR SMALLER) SCHEDULE 40 PVC CONDUIT INSTALLED IN ACCORDANCE WITH ARTICLE 347 OF THE NATIONAL ELECTRIC CODE (NFPA NO. 70).

   F. ELECTRICAL NONMETALLIC TUBING (ENT)++ - NOM. 1 IN. DIAMETER (OR SMALLER) ENT FORMED OF PVC, INSTALLED IN ACCORDANCE WITH ARTICLE 331 OF THE NATIONAL ELECTRIC CODE (NFPA NO. 70).

   SEE RIGID NONMETALLIC CONDUIT (DXKT) AND ELECTRICAL NONMETALLIC TUBING (RKNU) IN U.L. CONSTRUCTION MATERIALS DIRECTORY FOR NAMES OF MANUFACTURERS

   THE HOURLY T RATING IS DEPENDENT ON THE HOURLY RATING OF THE WALL ASSEMBLY, THE PIPE OR CONDUIT SIZE AND WHETHER THE PIPE IS INTENDED FOR USE IN A CLOSED OR VENTED SYSTEM, AS SHOWN IN THE FOLLOWING TABLE:

NOM. PIPE OR DIAM, IN.	WALL ASSEMBLY RATING, HR	CLOSED (C) OR VENTED (V)	T RATING, HR
1/2 TO 3	1	C	1
1/2 TO 1 1/4	1	V	1
1/2 TO 1 1/4	2	C	2
1/2 TO 1 1/4	2	V	1
2	1	V	0
2	2	V	0

3. FILL, VOID OR CAVITY MATERIAL* - CAULK OR PUTTY - MIN. THICKNESS OF 5/8 IN. AND 1 1/4 IN. OF CAULK OR PUTTY FOR 1 AND 2 HR RATED WALL ASSEMBLIES, RESPECTIVELY, APPLIED WITHIN ANNULUSEN BETWEEN PIPE OR CONDUIT AND PERIPHERY OF THE OPENING, FLUSH WITH BOTH SURFACES OF WALL ASSEMBLY. AT THE POINT CONTACT LOCATION BETWEEN PIPE OR CONDUIT AND GYPSUM WALLBOARD, A MIN. 1/2 IN. DIAMETER BEAD OF CAULK OR PUTTY SHALL BE APPLIED AT THE PIPE OR CONDUIT/WALLBOARD INTERFACE ON BOTH SURFACES OF WALL ASSEMBLY.

MINNESOTA MINING & MFG. CO. - CP 25WB+, MPS-2+
*BEARING UL CLASSIFICATION MARKING
++ BEARING UL LISTING MARK

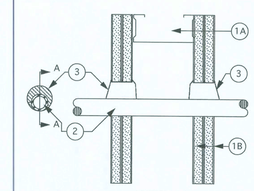

SECTION A-A

3 FIRE RATED WALL PENETRATION SYSTEMS

NO SCALE

SYSTEM NO. W-L-3001

F RATINGS - 1 AND 2 HR (SEE ITEM 1)
T RATINGS - 3/4, 1, 1 1/2, AND 2 HR (SEE ITEM 2)
L RATING AT AMBIENT -15 CFM/SQ. FT. (SEE ITEM 3)
L RATING AT 400 F - LESS THAN 1 CFM/SQ FT (SEE ITEM 3)

1. WALL ASSEMBLY - THE 1 OR 2 HR FIRE-RATED GYPSUM WALLBOARD/STUD WALL ASSEMBLY SHALL BE CONSTRUCTED OF THE MATERIALS AND IN THE MANNER DESCRIBED IN THE INDIVIDUAL U300 OR U400 SERIES WALL OR PARTITION DESIGNS IN THE UL FIRE RESISTANCE DIRECTORY AND SHALL INCLUDE THE FOLLOWING CONSTRUCTION FEATURES:

   A. STUDS - WALL FRAMING MAY CONSIST OF EITHER WOOD STUDS OR STEEL CHANNEL STUDS. WOOD STUDS TO CONSIST OF NOM 2 BY 4 IN. LUMBER SPACED 16 IN. OC WITH NOM 2 BY 4 IN. LUMBER END PLATES AND CROSS BRACES. STEEL STUDS TO BE MIN. 3-5/8 IN. WIDE BY 1-3/8 IN. DEEP CHANNELS SPACED MAX 24 IN. OC.

   B. WALLBOARD, GYPSUM* - NOM 1/2 OR 5/8 IN. THICK, 4 FT. WIDE WITH SQUARE OR TAPERED EDGES. THE GYPSUM WALLBOARD TYPE, THICKNESS, NUMBER OF LAYERS, FASTENER TYPE AND SHEET ORIENTATION SHALL BE AS SPECIFIED IN THE INDIVIDUAL WALL OR PARTITION DESIGN. DIAM OF ORCLE THROUGH OPENING TO BE 3/8 IN. TO 5/8 IN. LARGER THAN OUTSIDE DIAM OF CABLE OR CABLE BUNDLE.

   C. FASTENERS - WHEN WOOD STUD FRAMING IS EMPLOYED GYPSUM WALLBOARD LAYERS ATTACHED TO STUDS WITH CEMENT COATD NAILS AS SPECIFIED IN THE INDIVIDUAL WALL OR PARTITION DESIGN. WHEN STEEL CHANNEL STUD FRAMING IS EMPLOYED, GYPSUM WALLBOARD ATTACHED TO STUDS WITH TYPE S SELF-DRILLING SELF-TAPPING BUGLE HEAD STEEL SCREWS AS SPECIFIED IN THE INDIVIDUAL WALL OR PARTITION DESIGN.

THE HOURLY F RATING OF THE FIRESTOP SYSTEM IS EQUAL TO THE HOURLY FIRE RATING OF THE WALL ASSEMBLY IN WHICH IT IS INSTALLED.

2. CABLES - INDIVIDUL CABLE OR MAX 1 IN DIAM. CABLE BUNDLE INSTALLED IN THROUGH OPENING WITH ANNULAR SPACE OF 0 IN. (POINT CONTACT) TO MAX. 3/4 IN. CABLE TO BE RIDIOLY SUDRTED ON BOTH SIDES OF WALL ASSEMBLY. THE FOLLOWING TPES AND SIZES OF CABLES MAY BE USED:

   A. MAX 150 PAIRO. 24 AWG COPPER CONDUCTOR TELEPHONE CABLE WITH POLYVINYL CHLORIDE (PN INSULATION AND JACKET MATERIALS. WHEN MAX. 25 PAIR TELEPHONE CABLE IS USEDT RATING IS 2 HR. WHEN 50 TO 150 PAIR TELEPHONE CABLE IS USED IN 1 HR FIRE RTED WALL, T RATING IS 3/4 HR. WHEN 50 TO 150 PRI TELEPHONE CABLE IS USED IN 2 1 FIRE RATED WALL, T RATING IS 1 HR.

   B. MAX. NO. 10 #6 MULTIPLE COPPER CONDUCTOR TYPE MM (FOMEX) NONMETALLIC SHEATHED CALE WITH PVC INSULATION AND JACKET MATERIALS. WHEN TYPE NM CABLE IS USED, MAX. RATING IS 1-1/2 HR.

   C. MULTIPLE FIBEOPTICAL COMMUNICATION CABLE JACKETED WITH PVC AND HAVING A OUTSIDE DIAOF 5/8 IN. WHEN FIBER OPTIC CABLE IS USED, MAX T RATING IS 2 HR.

   D. MAX 12 AWG/LTICONDUCTOR (MAX SEVEN CONDUCTORS) POWER/CONTROL CABLE WITH CROSS LINKEDYLYETHYLENE (XLPE) INSULATION AND XLPE OR PVC JACKET MATERIALS. WHEN MULTI INDUCTOR POWER/CONTROL CABLE IS USED, MAX T RATING IS 2 HR.

   E. MAX FOUR COJUCTOR WITH GROUND NO. 2 AWG (OR SMALLER) ALUMINUM SER CABLES WITH POLYVIL CHLORIDE INSULATION AND JACKET MATERIALS.

3. FILL, VOID OR CAVTY MATERIAL* - CAULK OR PUTTY - CAULK OR PUTTY FILL MATERIAL INSTALLED TO COMPLETELY FILL ANNULAR SPACE BETWEEN CABLE AND GYPSUM WALLBOARD ON BOTH SIDES OVALL AND WITH A MIN. 1/4 IN. DIAM BEAD OF CAULK APPLIED TO PERIMETER OF CABLE(S) AT I EGRESS FROM THE WALL. CAULK INSTALLED SYMMETRICALLY ON BOTH SIDES OVALL ASSEMBLY.

MINNESOTA MINING &FG. CO. - MPS-2+ PUTTY, CP 25WB+ CAULK (NOTE L RATINGS APPLY ONLY WHEN TYPE CP 25WBCAULK IS USED.)

*BEARING THE UL CLUSFICATION MARKING.

SECTION A-A

4 FIRE RATED WALL PENETRATION SYSTEMS

NO SCALE

SYSTEM NO. W-L-5001

F RATINGS - 1 AND 2 HR (SEE ITEM 1)
T RATINGS - 3/4, 1, 1 1/2, AND 2 HR (SEE ITEM 3)
L RATING AT AMBIENT - 2 CFM/SQ.
L RATING AT 400 F - LESS THAN 1 CFM/SQ FT

1. WALL ASSEMBLY - THE 1 OR 2 HR FIRE-RATED GYPSUM WALLBOARD/STUD WALL ASSEMBLY SHALL BE CONSTRUCTED OF THE MATERIALS AND IN THE MANNER DESCRIBED IN THE INDIVIDUAL U300 OR U400 SERIES WALL OR PARTITION DESIGNS IN THE UL FIRE RESISTANCE DIRECTORY AND SHALL INCLUDE THE FOLLOWING CONSTRUCTION FEATURES:

   A. STUDS - WALL FRAMING MAY CONSIST OF EITHER WOOD STUDS OR STEEL CHANNEL STUDS. WOOD STUDS TO CONSIST OF NOM 2 BY 4 IN. LUMBER SPACED 16 IN. OC WITH NOM 2 BY 4 IN. LUMBER END PLATES AND CROSS BRACES. STEEL STUDS TO BE MIN. 3-5/8 IN. WIDE BY 1-3/8 IN. DEEP CHANNELS SPACED MAX 24 IN. OC.

   B. WALLBOARD, GYPSUM* - 5/8 IN. THICK, 4 FT. WIDE WITH SQUARE OR TAPERED EDGES. THE GYPSUM WALLBOARD TYPE, THICKNESS, NUMBER OF LAYERS, FASTENER TYPE AND SHEET ORIENTATION SHALL BE AS SPECIFIED IN THE INDIVIDUAL U300 OR U400 SERIES DESIGN IN UL FIRE RESISTANCE DIRECTORY. MAX. DIAM OF OPENING IS 14-1/2 IN FOR WOOD STUDS AND 18 IN. FOR STEEL STUD WALLS.

THE HOURLY F RATING OF THE FIRESTOP SYSTEM IS 1 HR WHEN INSTALLED IN A 1 HR FIRE RATED WALL AND 2 HR WHEN INSTALLED IN 2 HF FIRE RATED WALL.

2. THROUGH PENETRANTS - ONE METALLIC PIPE OR TUBING TO BE CENTERED WITHIN THE FIRESTOP SYSTEM. PIPE OR TUBING TO BE RIGIDLY SUPPORTED ON BOTH SIDES OF WALL ASSEMBLY. THE FOLLOWING TYPES AND SIZES OF METALLIC PIPES OR TUBING MAY BE USED:

   A. STEEL PIPE - NOM. 12 IN. DIAM (OR SMALLER) SCHEDULE 10 (OR HEAVIER) STEEL PIPE.

   B. COPPER TUBING - NOM 6 IN. DIAM (OR SMALLER) TYPE L (OR HEAVIER) COPPER TUBING.

   C. COPPER PIPE - NOM 6 IN. DIAM (OR SMALLER) REGILAR (OR HEAVIER) COPPER PIPE.

3. PIPE COVERING* - NOM 1 OR 2 IN. THICK HOLLOW CYLINDRICAL HEAVY DENSITY (MIN. 3.5 PCF) GLASS FIBER UNITS JACKETED ON THE OUTSIDE WITH ALL SERVICES JACKET LONGITUDINAL JOINTS SEALED WITH METAL FASTENERS OR FACTORY-APPLIED SELF-SEALING LAP TAPE. TRANSVERSE JOINTS SEALED WITH METAL FASTENERS OR WITH BUTT STRIP TAPE SUPPLIED WITH THE PRODUCT. WHEN NOM 1 IN. THICK PIPE COVERING IS USED, THE ANNULAR SPACE BETWEEN THE PIPE COVERING AND THE CIRCULAR CUTOUT IN THE GYPSUM WALLBOARD LAYERS ON EACH SIDE OF THE WALL SHALL BE MIN. 1/2 IN. TO MAX 3/4 IN.

   SEE- PIPE AND EQUIPMENT COVERING - MATERIALS (IBRU3) CATEGORY IN BUILDING MATERIALS DIRECTORY FOR NAMES OF MANUFACTURERS. ANY PIPE COVERING MATERIAL MEETING THE ABOVE DESCRIPTION AND BEARING THE UL CLASSIFICATION MARKING WITH A FLAME SPREAD INDEX OF 25 OR LESS AND A SMOKE DEVELOPMENT INDEX OF 50 OR LESS MAY BE USED.

THE HOURLY T RATING OF THE FIRESTOP SYSTEM IS 3/4 HR WHEN NOM 1 IN. THICK PIP COVERING IS USED. THE HOURLY T RATING OF THE FIRESTOP SYSTEM IS 1 HR. AND 1-1/2 HR. WHEN NOM 2 IN. THICK PIPE COVERING IS USED WITH 1 HR AND 2 HR FIRE RATED WALLS, RESPECTIVELY.

4. FIRESTOP SYSTEM - INSTALLED SYMMETRICALLY ON BOTH SIDES OF WALL ASSEMBLY. THE DETALS OF THE FIRE STOP SYSTEM SHALL BE AS FOLLOWS:

   A. FILL, VOID OR CAVITY MATERIAL* - WRAP STRIP - NOM 1/4 IN. THICK INTUMESCENT ELASTOMERIC MATERIAL FACED ON ONE SIDE WITH ALUMINUM FOIL, SUPPLIED IN 2 IN. WIDE STRIPS. NOM 2 IN. INDE STRIP TIGHTLY WRAPPED AROUND PIPE COVERING (FOIL SIDE OUT) WITH SEAM BUTTED. WRAP STRIP LAYER SECURELY ROUND WITH STEEL WIRE OR ALUMINUM FOIL TAPE AND SLID INTO ANNULAR SPACE APPROX 1-1/4 IN. SUCH THAT APPROX 3/4 IN. OF THE WRAP STRIP IS REQUIRED WHEN NOM 1 IN. THICK PIPE COVERING IS USED. TWO LAYERS OF WRAP STRIP ARE REQUIRED WHEN NOM 2 IN. THICK PIPE COVERING IS USED.

   MINNESOTA MINING & MFG. CO - FS-195

   B. FILL, VOID OR CAVITY MATERIALS* - CAULK - MIN 1/4 IN. DIAM CONTINUOUS BEAD APPLIED TO THE WRAP STRIP/WALL INTERFACE AND TO THE EXPOSED EDGE OF THE WRAP STRIP LAYER APPROX 3/4 IN. FROM THE WALL SURFACE.

   MINNESOTA MINING & MFG. CO. - CP 25WB+ CAULK

*BEARING THE UL CLASSIFICATION MARKING.

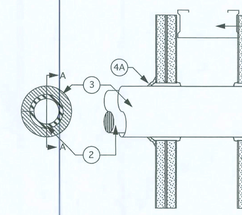

SECTION A-A

5 DETAIL- 1 HOUR FIRE RATED CEILING

SCALE: 1/2 FULL

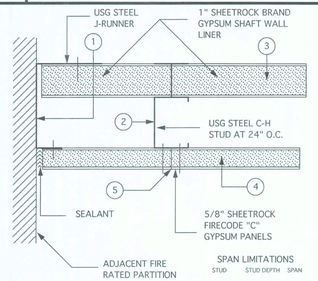

TEST NO. WH-495 PSH 0154/0167

SPAN LIMITATIONS

STUD	STUD DEPTH	SPAN
212CH25	2 1/2"	6'-7"
212CH22	2 1/2"	9'-4"
212CH20	2 1/2"	10'-3"
400CH25	4"	8'-8"
400CH20	4"	14'-6"

1. USG J RUNNERS ATTCHED TO ALL EXISTNG HORIZ. AND VERT. FRAMING INTERSECTED AT THE BOUNDARIECF THE AREA TO BE PROTECTED. J RUNNERS ATTACHED TO FRAMING MEMBERS USING MEANICAL FASTENERS SPACED AT 24 IN. (MAX) O.C.

2. USG C-H STUDS OF IQUIRED GAUGE ATTACHED TO J RUNNERS AT 24 IN. (MAX) O.C. WITH TWO TYPE S-12, 1/IN. PANHEAD SCREWS TO FRAME THE WALL AND/OR SOFFIT ENCLOSURE. CORINS OF ENCLOSURE WHICH DO NOT INTERSECT EXISTING FRAMING ARE BUILD UP OF TR J RUNNERS AND FASTENED TOGETHER WITH TWO TYPE S-12, 1/2 IN. PANHEAD SIEWS AT 24 IN. (MAX) O.C. USG C-H STUDS FASTENED TO THE J RUNNERS AS PREVICSLY DESCRIBED.

3. ONE IN. THICK SHEECOCK BRAND GYPSUM LINER PANELS, 24 IN. WIDE, INSTALLED ON THE INTERIOR FACE OF TE ENCLOSURE WITHIN THE SLOTS OV THE C-H STUDS. NO SCEW ATTACHEOMENTS AI REQUIRED. WHERE GYPSUM LINER PANEL INTERSECTS THE J RUNNER AGAINST THE EXTRA HORIZ. AND/OR VERTICAL FRAMING, 1 5/8 IN. TYPE S SCREWS ARE INSTALLED AT A MA OF 12 IN. O.C.

4. ONE LAYER 5/8 IN. HEETROCK FIRECODE C GYPSUM PANELS APPLIED TO THE C-H STUDS, WITH ALL VERTICALJOINTS ON STUDS. PANELS ARE FASTENED TO EACH C-H STUD AND END J RUNNERS WITH 1 I TYPE S SCREWS 12 IN. O.C. IN THE FIELD AND AT EDGES.

5. JOINTS AND SCREWTADS ON THE OUTER FACE PANELS ARE FINISHED WITH SHEETROCK JOINT TAPE AND SHTROCK JOINT COMPOUND.

6

7

8

9

10

11

12

13

14

15

DESIGN SERVICES INCORPORATED
1778 N. PARK AVENUE, SUITE 100, MAITLAND, FL 32751,
TELEPHONE(407) 629-5755
LICENSE NO. F00061
ARCHITECTURE
INTERIOR DESIGN
SPACE PLANNING

PEOPLES STATE BANK

WEST OFFICE
(NEW BRANCH BANK)
LAKE CITY, FLORIDA

GENERAL NOTES

THE DESIGN, DRAWINGS, AND SPECIFICATIONS INCORPORATED HEREIN AS AN INSTRUMENT OF PROFESSIONAL SERVICES ARE, AND SHALL BE THE SOLE PROPERTY OF DSI DESIGN SERVICES IC. . THEY ARE NOT TO USED ON ANY OTHER PROJECT OR FOR ANY OTHERPURPOSE WITHOUT SPECIFIC WRITTEN PERMISSION. ALL RIGHTS RESERVED.

INTERIOR ELEVATION KEY

NORTH
ACTUAL
PLAN

MARK	DATE	REVISIONS

COMM. NO:	06003.00	DRAWN:	KLP
DATE:	02/15/06	CHECKED:	ELM
SCALE:	AS NOTED		
FILE:	06003.00-DETAILS 50 (FR)		

DETAILS

SEAL

ARCHITECT/CONSULTANT

EDDIE L. MUSE
JUN 07 2006
LICENSE NO. AR-12112

SHEET NUMBER

A-8.50

06003.00-DETAILS 50 (FR) Wed, May 24, 2006 10:46:57 AM

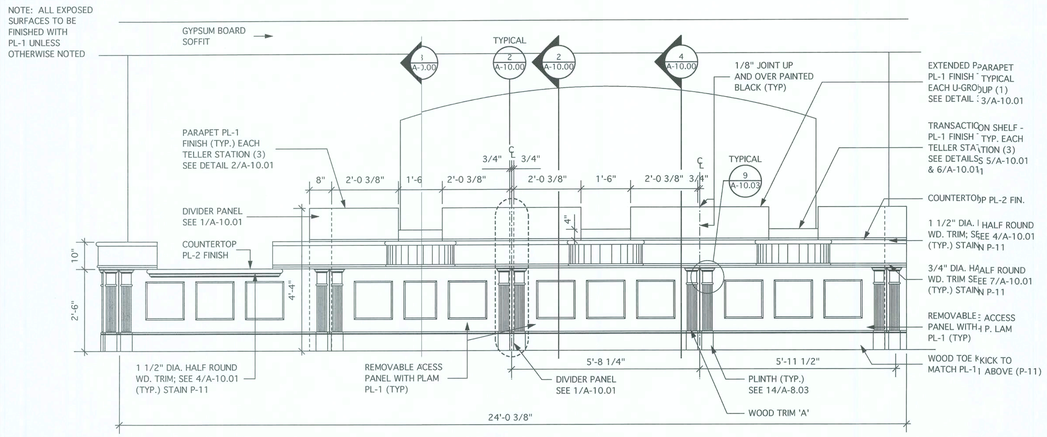

4 TELLERLINE #112

1/2" = 1'-0"

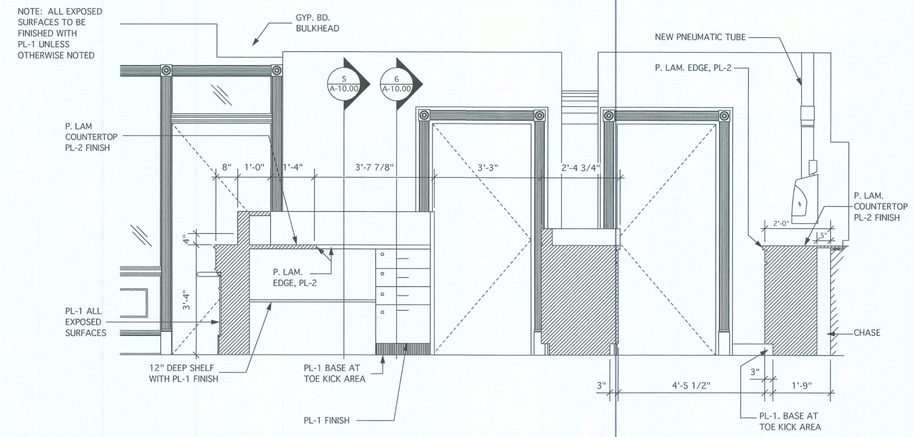

3 TELLERLINE #112 AND DRIVE-IN TELLERS #113

1/2" = 1'-0"

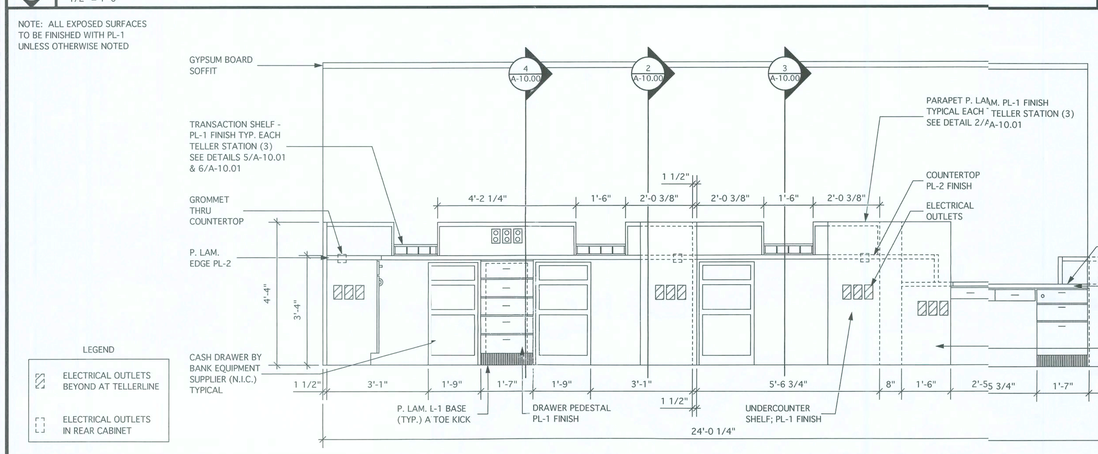

2 TELLERLINE # 112

1/2" = 1'-0"

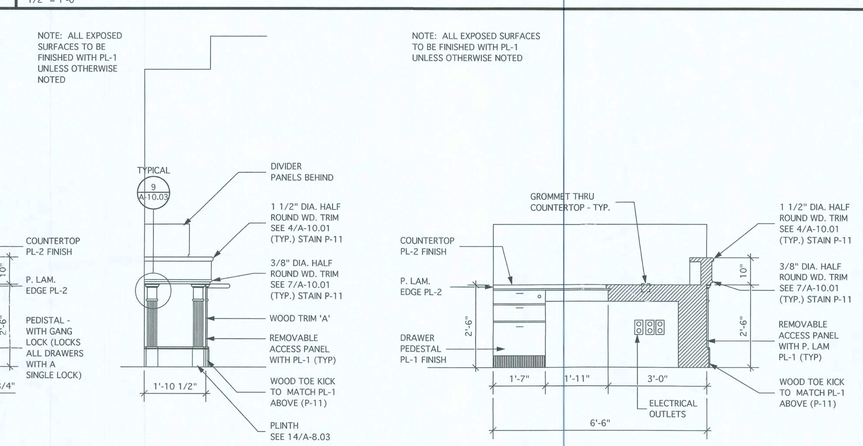

1 TELLERLINE #112

1/2" = 1'-0"

1 TELLERLINE #112

1/2" = 1'-0"

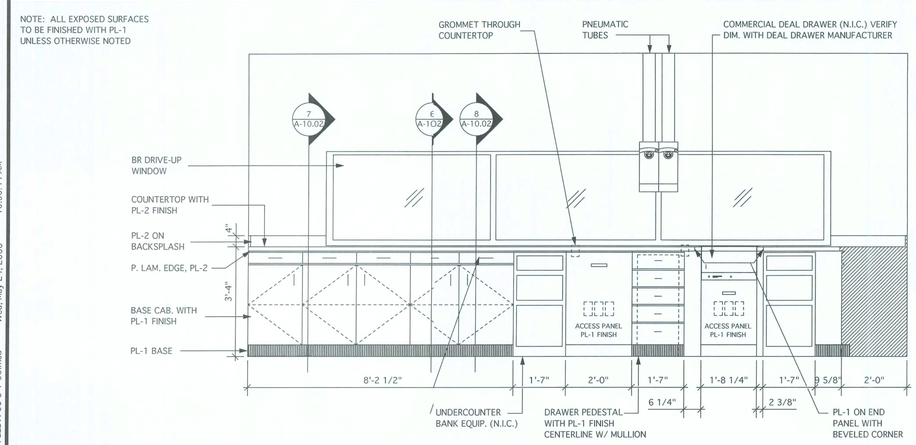

4 DRIVE-IN TELLERS #113

1/2" = 1'-0"

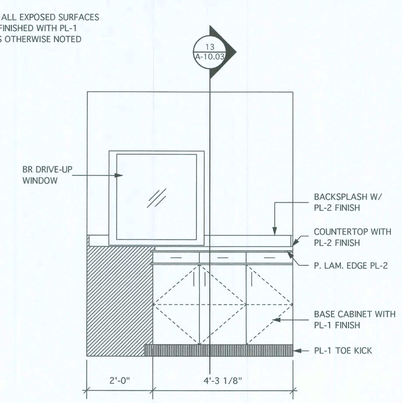

1 DRIVE-IN TELLERS #113

1/2" = 1'-0"

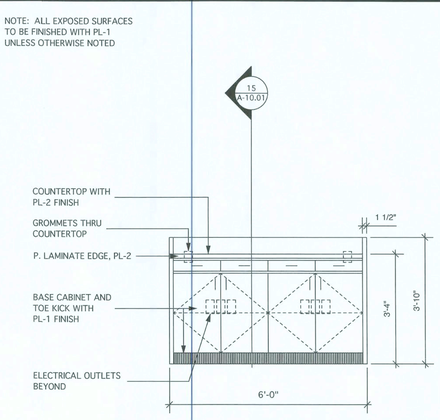

3 DRIVE-IN TELLERS #113

1/2" = 1'-0"

DESIGN SERVICES INCORPORATED
1778 N. PARK AVE., SUITE 100, MAITLAND, FL 32751
TELEPHONE(407) 629-5755
LICENSE NO. F00061
ARCHITECTURE INTERIOR DESIGN SPACE PLANNING

WEST OFFICE
(NEW BRANCH BANK)
LAKE CITY, FLORIDA

PEOPLES STATE BANK

GENIRAL NOTES

INTERIOR ELEVATION VIEW

1 ROOM NAME & NUMBER
SCALE

INTERIOR ELEVATION DRAWING TITLE

NOTES:

1. CONTRACTOR SHALL VERIFY ALL MILLWORK DIMENSIONS..
2. CONTRACTOR TO COORDINATE DIMENSION AND LOCATIONS WITH BANK EQUIPMENT MANUFACTURER.

THE DESIGN, DRAWINGS, AND SPECIFICATIONS INCORPORATED HEREIN AS AN INSTRUMENT OF PROFESSIONAL SERVICES ARE, AND SHALL BE THE SOLE PROPERTY OF DSI DESIGN SERVICES INC.. THEY ARE NOT TO USED ON ANY OTHER PROJECT OR FOR ANY OTHR PURPOSE WITHOUT SPECIFIC WRITTEN PERMISSION. ALL RIGHTS RESERVED.

1 2 3 4

INTERIOR ELEVATION KEY

NORTH
ACTUAL
PLAN

MARK	DATE	REVISIONS

COMM. NO:	06003.00	DRAWN:	KLP
DATE:	02/15/06	CHECKED:	ELM
SCALE:	1/2" = 1'-0"		
FILE:	06003.00INT. ELEV. 00 5-1-06.mcd		

INTERIOR ELEVATIONS

SEAL

ARCHITECT/CONSULTANT

EDDIE L. MUSE
JUN 07 2006
LICENSE NO. AR-12112

SHEET NUMBER

A-9.00

06003.00-INT. ELEV. 00 5-1-06.mcd Wed, May 24, 2006 10:50:44 AM

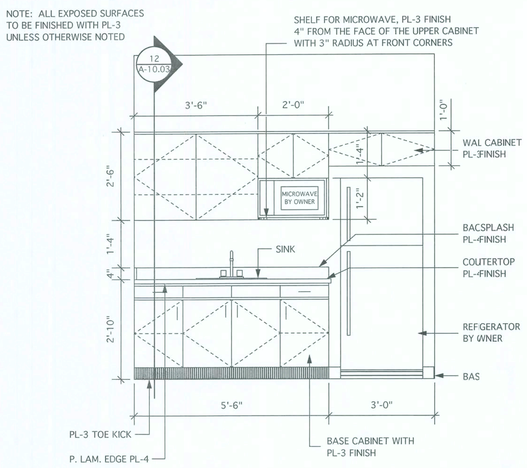

3 EMPLOYEE LOUNGE #107
1/2" = 1'-0"

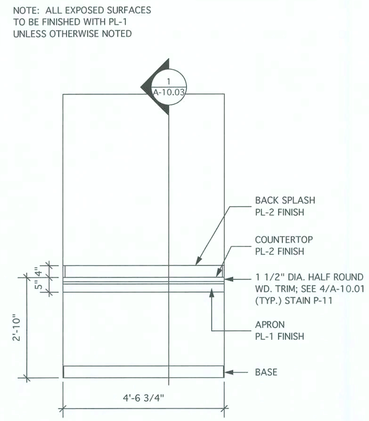

3 SAFE KEEPING #109
1/2" = 1'-0"

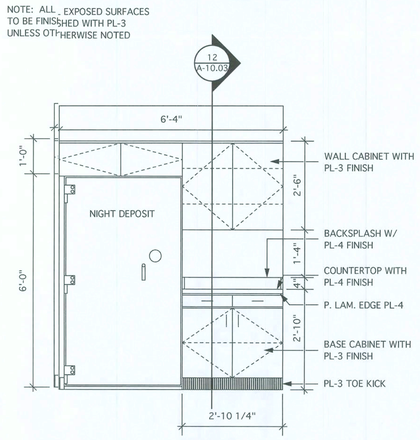

4 NIGHTDROP #114
1/2" = 1'-0"

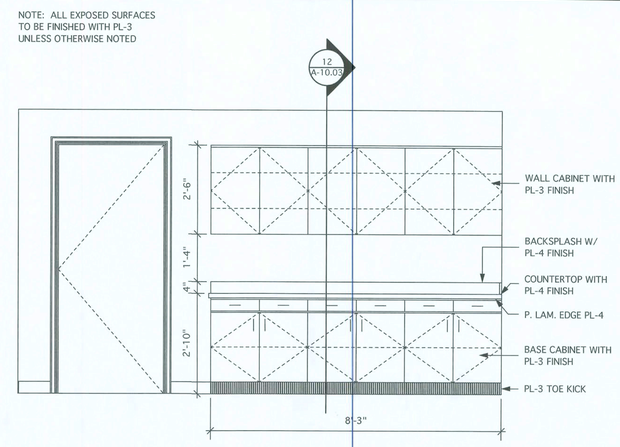

2 WORK ROOM #117
1/2" = 1'-0"

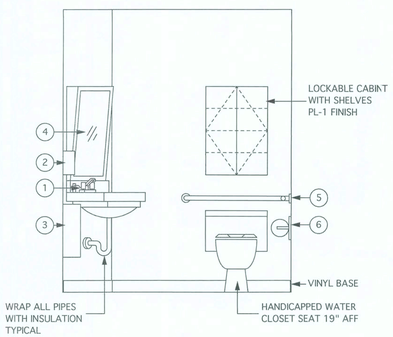

2 MEN #104
1/2" = 1'-0"

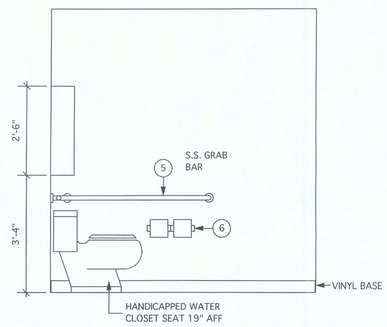

3 MEN #104
1/2" = 1'-0"

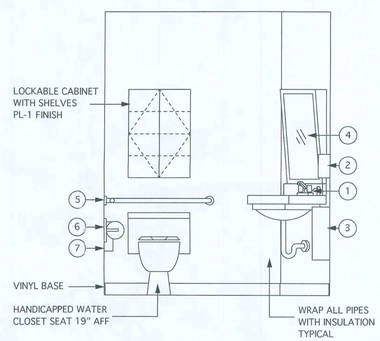

2 WOMEN #105
1/2" = 1'-0"

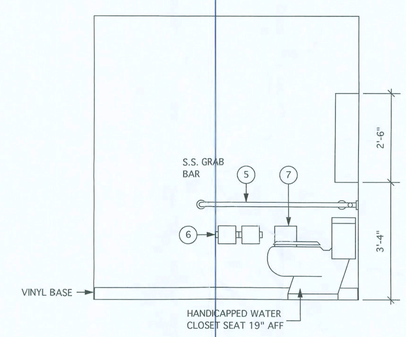

1 WOMEN #105
1/2" = 1'-0"

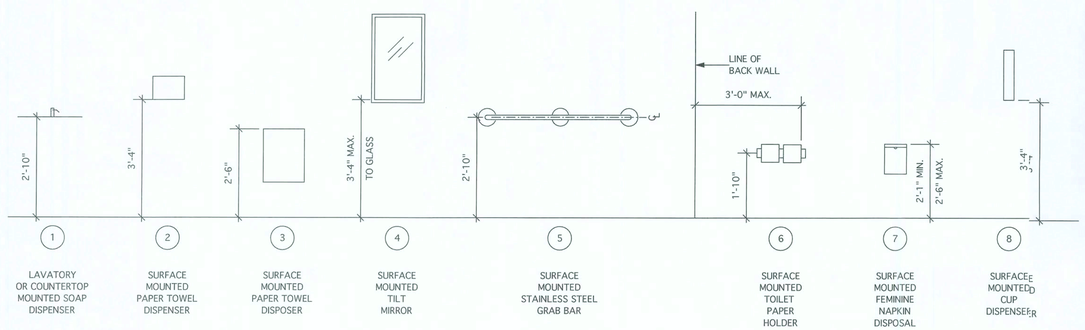

ACCESSORY MOUNTING HEIGHTS
1/2" = 1'-0"

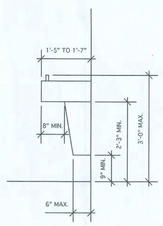

WATER FOUNTAIN MOUNTING HEIGHTS AND LIMITATIONS

	PRODUCT DATA			PRODUCT CHARACTERISTICS			INSTALLATION INFORMATION			
CODE	MANUFACTURER	PRODUCT/MODEL	MFR. NO.	SIZE/WEIGHT	TYPE	FINISH	MFR.	TYPE	METHOD	NOTES
1	BOBRICK	SOAP DISPENSER	B-822165	5 7/8" SPOUT	----	POLISHED	----	----	LAV/CTR MOUNTED	
2	BOBRICK	PAPER TOWEL DISPENSER	B-2621	10 3/4" WIDE 8" HIGH	----	SATIN			SURFACE MOUNTED	
3	BOBRICK	PAPER TOWEL DISPOSAL	B-279	13" X 18"	----	SATIN	----	----	SURFACE MOUNTED	
4	BOBRICK	TILT MIRROR	B-293-1830	18" W X 30" H	----	SATIN	----	----	SURFACE MOUNTED	
5	BOBRICK	GRAB BAR	B-68137.99	36" X 54"	L-SHAPED	SATIN	----	----	SURFACE MOUNTED	1
6	BOBRICK	TOILET PAPER DISP.	B-6867	----	DUEL ROLL	SATIN	----	----	SURFACE MOUNTED	
7	BOBRICK	FEMININE NAPKIN DISPOSAL	B-270	7 1/2" WIDE 10" HIGH	----	SATIN	----	----	SURFACE MOUNTED	
8	BOBRICK	CUP DISPENSER	B-235	----	----	SATIN	----	----	SURFACE MOUNTED	

NOTES:

1. WITH PEENED GRIP

ACCESSORY SCHEDULE

DESIGN SERVICES INCORPORATED
1778 N. PARK AVE., SUITE 100, MAITLAND, FL 32751
TELEPHONE(407) 629-5755
LICENSE NO. F00061
ARCHITECTURE INTERIOR DESIGN SPACE PLANNING

WEST OFFICE
(NEW BRANCH BANK)
LAKE CITY, FLORIDA

PEOPLES STATE BANK

GENERAL NOTES

INTERIOR ELEVATION VIEW

1 ROOM NAME & NUMBER
SCALE

INTERIOR ELEVATION DRAWING TITLE

NOTES:

1. CONTRACTOR SHALL VERIFY ALL MILLWORK DIMENSIONS..
2. CONTRACTOR TO COORDINATE DIMENSION AND LOCATIONS WITH BANK EQUIPMENT MANUFACTURER.

THE DESIGN, DRAWINGS, AND SPECIFICATION INCORPORATED HEREIN AS AN INSTRUMENT OF PROFESSIONAL SERVICES AE, AND SHALL BE THE SOLE PROPERTY OF DSI DESIGN SERVICES INC.. THY ARE NOT TO USED ON ANY OTHER PROJECT OR FOR ANY OTHER PURPOS WITHOUT SPECIFIC WRITTEN PERMISSION. ALL RIGHTS RESERVED.

INTERIOR ELEVATION KEY

NORTH
ACTUAL
PLAN

MARK	DATE	REVISIONS

COMM. NO:	06003.00	DRAWN:	KLP
DATE:	02/15/06	CHECKED:	ELM
SCALE:	1/2" = 1'-0"		
FILE:	06003.00-INT. ELEV. 01		

INTERIOR ELEVATIONS

SEAL

ARCHITECT/CONSULTANT
EDDIE L. MUSE
JUN 07 2006
LICENSE NO. AR-12112

SHEET NUMBER
A-9.01

NOTE: ALL EXPOSED SURFACES TO BE FINISHED WITH PL-1 FINISH UNLESS OTHERWISE NOTED

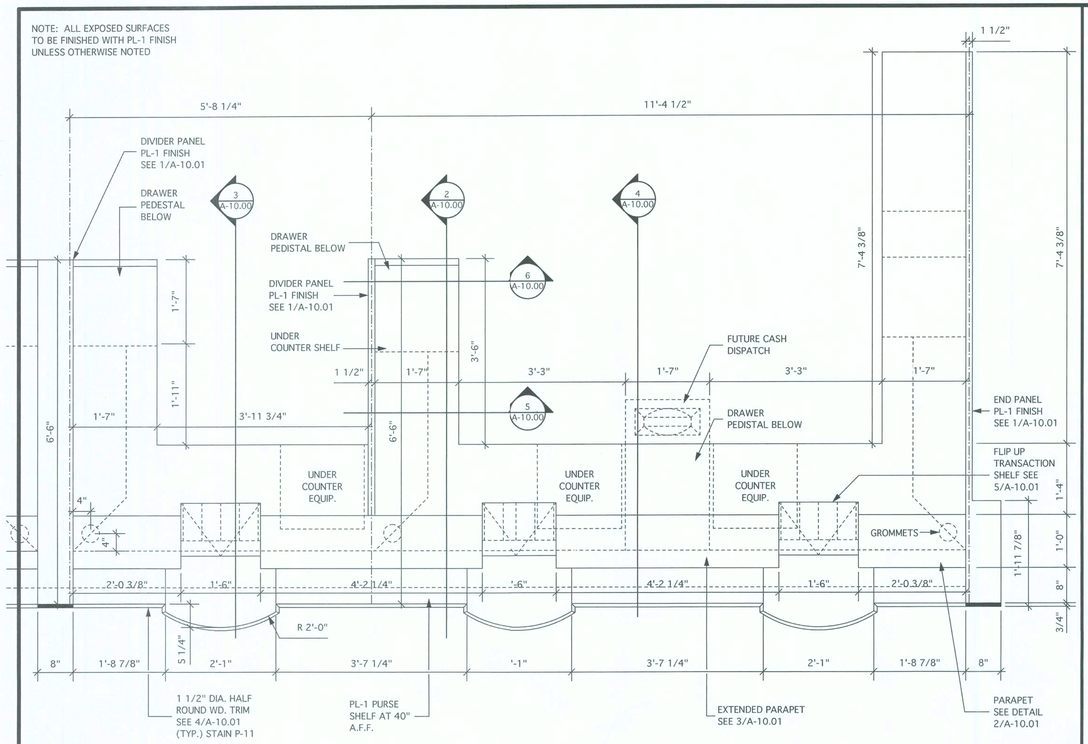

1 DETAIL - TELLERLINE PLAN

3/4" = 1'-0"

NOTE: ALL EXPOSED SURFACES TO BE FINISHED WITH PL-1 FINISH UNLESS OTHERWISE NOTED

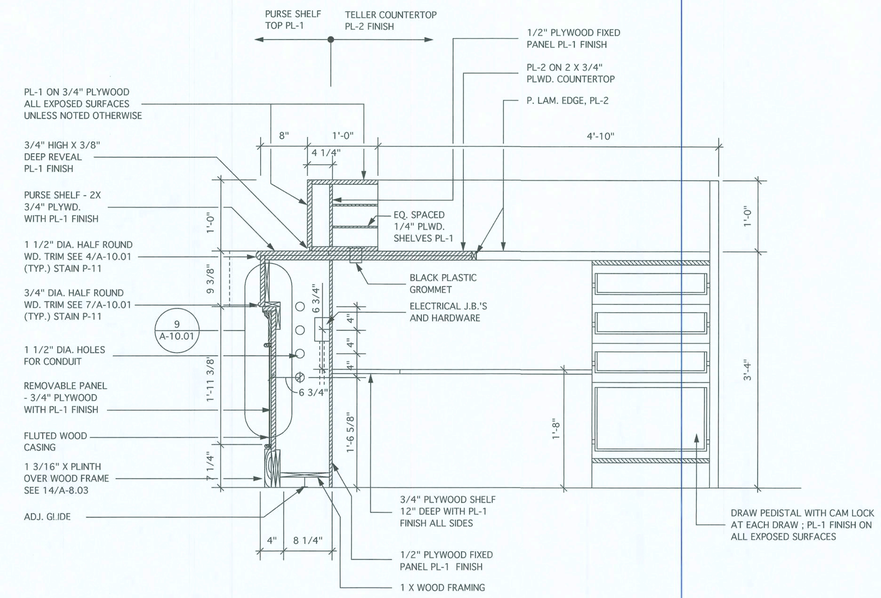

2 DETAIL - TELLERLINE SECTION

1" = 1'-0" AT PASS-THRU

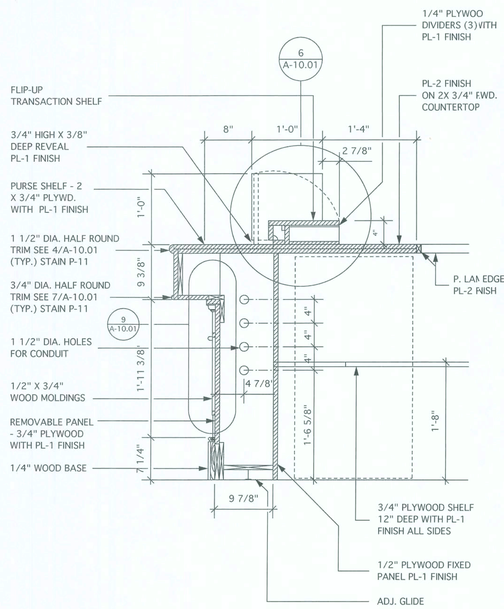

NOTE: ALL EXPOSED SURFACES TO BE FINISHED WITH PL-1 UNLESS OTHERWISE NOTED

3 DETAIL - TELLERLINE SECTION

1" = 1'-0" AT TRANSACTIO SHELF

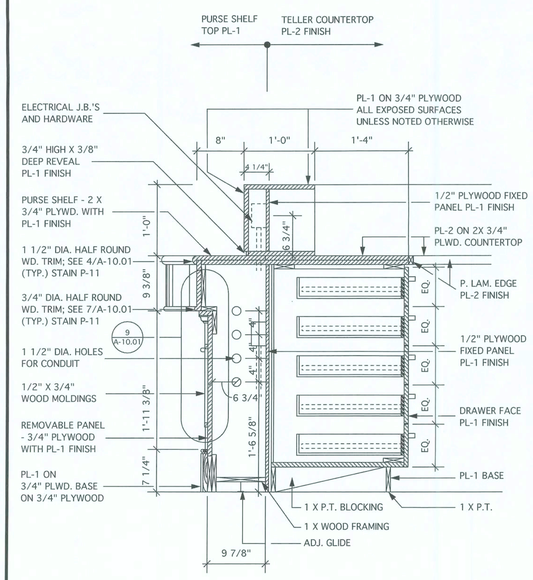

NOTE: ALL EXPOSED SURFACES TO BE FINISHED WITH PL-1 UNLESS OTHERWISE NOTED

4 DETAIL - TELLERLINE SECTION

1" = 1'-0"

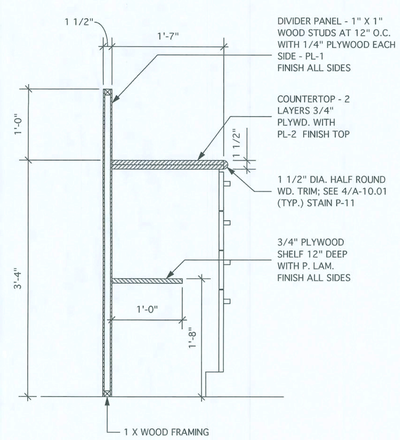

NOTE: ALL EXPOSED SURFACES TO BE FINISHED WITH PL-1 UNLESS OTHERWISE NOTED

5 DETAIL - TELLERLINE SECTION

1" = 1'-0" AT RETURN

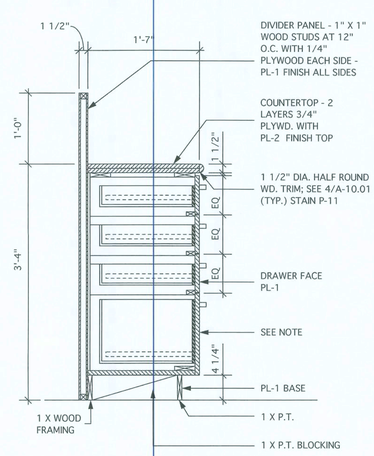

NOTE: ALL EXPOSED SURFACES TO BE FINISHED WITH PL-1 UNLESS OTHERWISE NOTED

NOTE: FABRICATE BOTTOM DRAWER TO "PENDAFLEX" FILE DIMENSIONS - VERIFY

6 DETAIL - TELLERLINE SECTION

1" = 1'-0"

DESIGN SERVICES INCORPORATED
1778 N. PARK AVENUE, SUITE 100, MAITLAND, FL 32751,
TELEPHONE(407) 629-5755
LICENSE NO. F00061
ARCHITECTURE
INTERIOR DESIGN
SPACE PLANNING

WEST OFFICE
(NEW BRANCH BANK)
LAKE CITY, FLORIDA

PEOPLES STATE BANK

GENERAL NOTES

THE DESIGN, DRAWINGS, AND SPECIFICATIONS INCORPORATED HEREIN AS AN INSTRUMENT OF PROFESSIONAL SERVICES ARE AND SHALL BE THE SOLE PROPERTY OF DSI DESIGN SERVICES INC.. THE ARE NOT TO USED ON ANY OTHER PROJECT OR FOR ANY OTHER PURPOSE WITHOUT SPECIFIC WRITTEN PERMISSION. ALL RIGHTS RESERVED.

1 2 3 4

INTERIOR ELEVATION KEY

NORTH
ACTUAL
PLAN

MARK	DATE	REVISIONS

COMM. NO:	06003.00	DRAWN:	KLP
DATE:	02/15/06	CHECKED:	ELM
SCALE:	AS NOTED		
FILE:	06003.00-MILLWORK 00		

MILLWORK DETAILS

SEAL

ARCHITECT/CONSULTANT

EDDIE L. MUSE
JUN 07 2006
LICENSE NO. AR-12112

SHEET NUMBER

A-10.00

06003.00-MILLWORK 00 Wed, May 24, 2006 11:16:30 AM

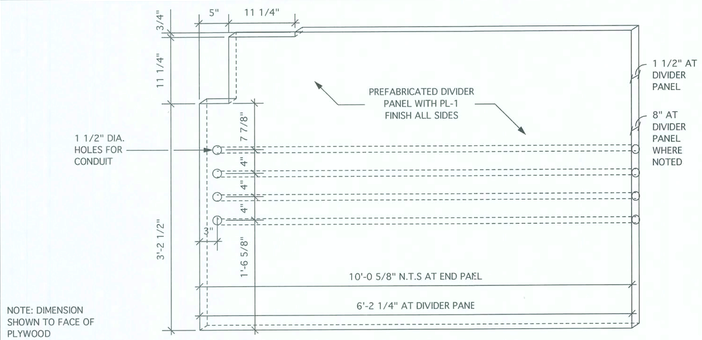

1 DETAIL - DIVIDER PANELS
1" = 1'-0" ISOMETRIC

NOTE: FINISH ALL EXPOSED SURFACES WITH PLASTIC LAMINATE, PL-1

NOTE: DIMENSION SHOWN TO FACE OF PLYWOOD

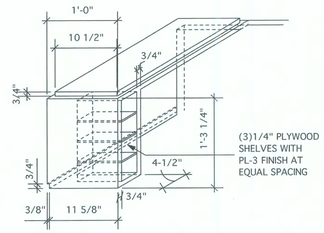

2 DETAIL - PARAPET
1" = 1'-0" ISOMETRIC

NOTE: FINISH ALL EXPOSED SURFACES WITH PLASTIC LAMINATE, PL-1

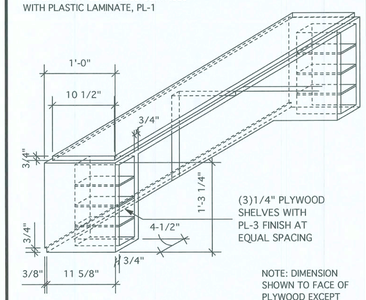

NOTE: DIMENSION SHOWN TO FACE OF PLYWOOD EXCEPT WHERE NOTED

3 DETAIL - EXTENDED PARAPET
1" = 1'-0" ISOMETRIC

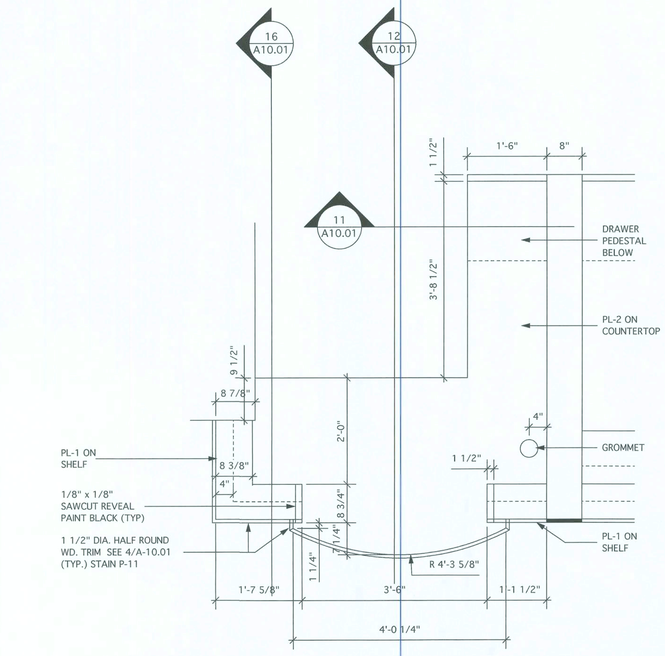

NOTE: ALL DIMENSIONS TO FACE OF PLYWOOD

8 DETAIL - NEW ACCOUNTS PLAN
3/4" = 1'-0"

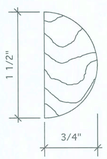

COUNTERTOP EDGE TRIM

4 SECTION - WOOD TRIM
FULL SCALE

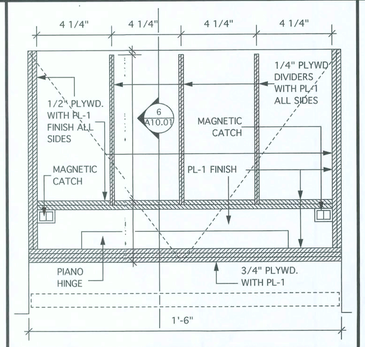

5 DETAIL - TRANSACTION PLAN
3" = 1'-0"

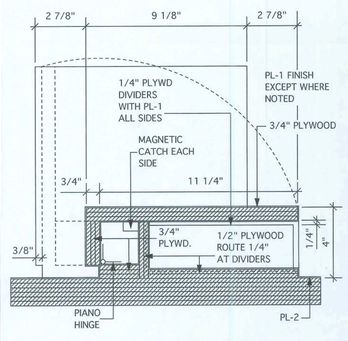

6 DETAIL - TRANSACTION SECT.
3" = 1'-0"

7

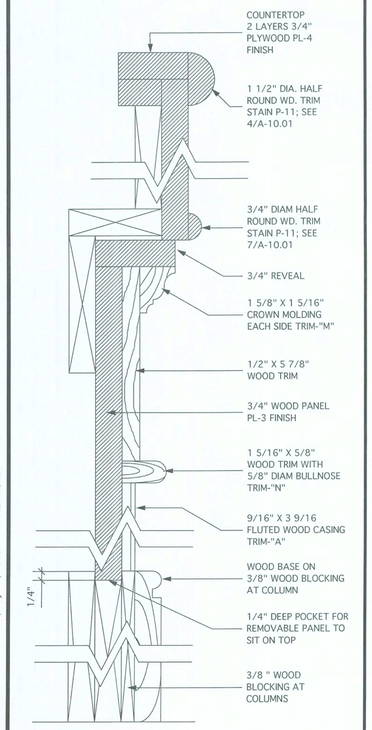

9 DETAIL - REMOVABLE PANEL
1/2 FULL AT TELLERLINE

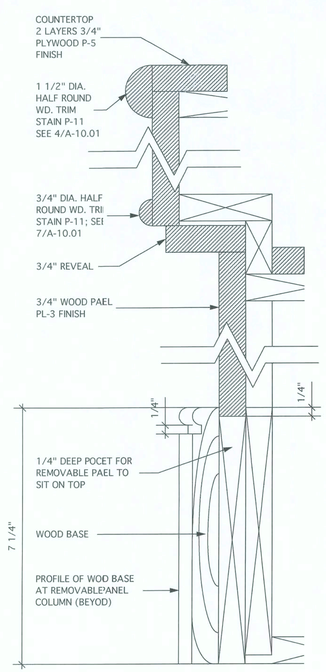

10 DETAI. - REMOVABLE PANEL
1/2 FULL AT NEW ACCOUNTS

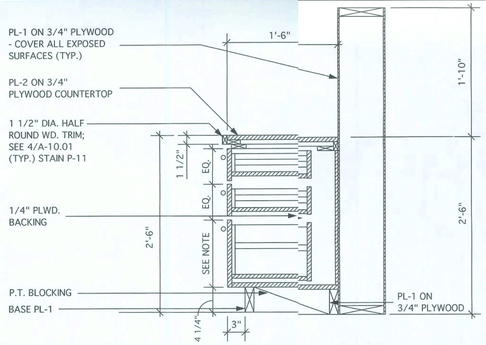

NOTE: ALL EXPOSED SURFACES TO BE FINISHED WITH PL-1 UNLESS OTHERWISE NOTED

NOTE: FABRICATE BOTTOM DRAWER TO "PENDAFLEX" FILE DIMENSIONS - VERIFY

NOTE: JUNCTION BOXES FOR ALL EQUIPMENT TO BE PROVIDED AND INSTALLED BY MILLWORK CONTRACTOR SEE ELECTRICAL DRAWINGS

11 SECTION - BASE CABINETS
1" = 1'-0" AT NIGHTDROP ROOM

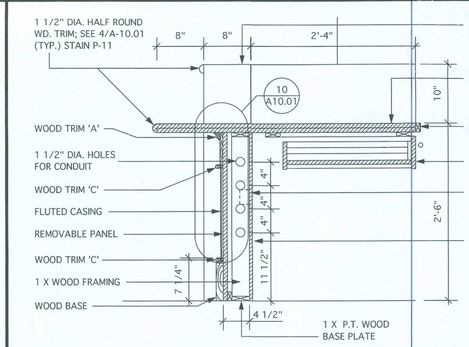

NOTE: ALL EXPOSED SURFACES TO BE FINISHED WITH PL-1 UNLESS OTHERWISE NOTED

NOTE: JUNCTION BOXES FOR ALL EQUIPMENT TO BE PROVIDED AND INSTALLED BY MILLWORK CONTRACTOR SEE ELECTRICAL DRAWINGS

12 SECTION - NEW ACCOUNTS
1" = 1'-0" AT PENCIL DRAWER

NOTE: ALL EXPOSED SURFACES TO BE FINISHED WITH PL-1 UNLESS OTHERWISE NOTED

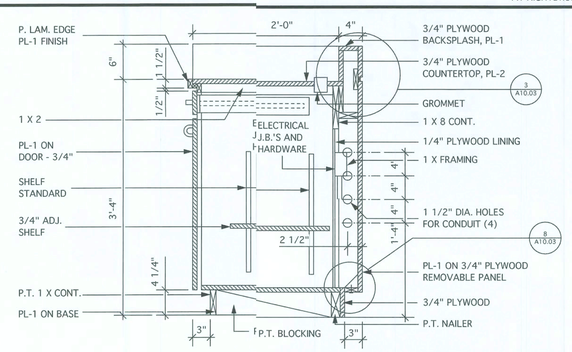

15 SECTION - BASE CABINETS
1" = 1'-0" AT DRIVE-IN TELLER

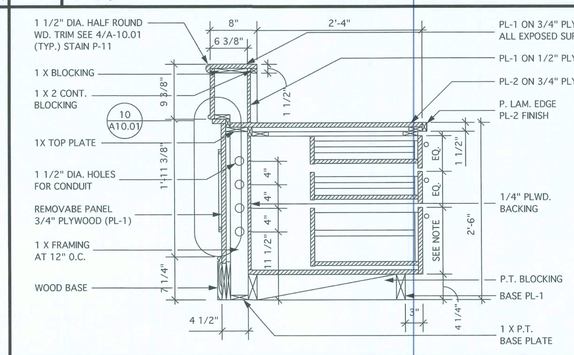

NOTE: ALL EXPOSED SURFACES TO BE FINISHED WITH PL-1 UNLESS OTHERWISE NOTED

NOTE: FABRICATE BOTTOM DRAWER TO "PENDAFLEX" FILE DIMENSIONS - VERIFY

NOTE: JUNCTION BOXES FOR ALL EQUIPMENT TO BE PROVIDED AND INSTALLED BY MILLWORK CONTRACTOR SEE ELECTRICAL DRAWINGS

16 SECTION - NEW ACCOUNTS
1" = 1'-0" AT DRAWER PEDESTAL

DESIGN SERVICES INCORPORATED
1778 N. PARK AVENUE, SUITE 100, MAITLAND, FL 32751,
TELEPHONE(407) 629-5755
LICENSE NO. F00061
ARCHITECTURE INTERIOR DESIGN SPACE PLANNING

WEST OFFICE
(NEW BRANCH BANK)
LAKE CITY, FLORIDA

PEOPLES STATE BANK

GENERALNOTES

THE DESIGN, DRAWINGS, AND SPECIFICATIONS INCORPORATED HEREIN AS AN INSTRUMENT OF PROFESSIONAL SERVICE ARE, AND SHALL BE THE SOLE PROPERTY OF DSI DESIGN SERVICES INC. THEY ARE NOT TO USED ON ANY OTHER PROJECT OR FOR ANY OTHER PUPOSE WITHOUT SPECIFIC WRITTEN PERMISSION. ALL RIGHTS RESERVED.

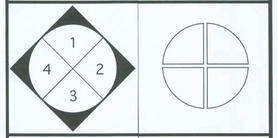

INTERIOR ELEVATION KEY

NORTH
ACTUAL
PLAN

MARK	DATE	REVISIONS

COMM. NO:	06003.00	DRAWN:	KLP
DATE:	02/15/06	CHECKED:	ELM
SCALE:	AS NOTED		
FILE:	06003.00-MIL_WORK 01		

MILLWORK DETAILS

SEAL

ARCHITECT/CONSULTANT

EDDIE L. MUSE
JUN 07 2006
LICENSE NO. AR-12112

SHEET NUMBER
A-10.01

06003.00-MILLWORK 01 Wed, May 24, 2006 11:21:10 AM

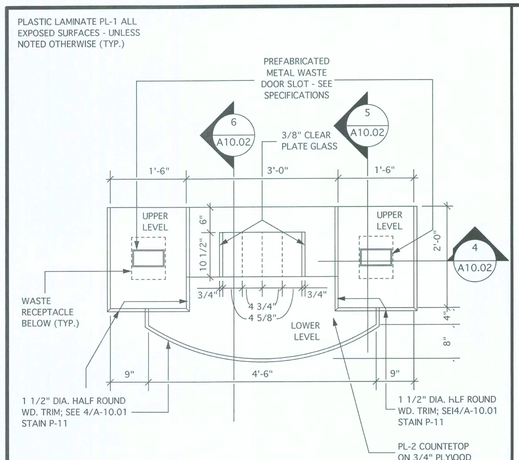

1 PLAN - CHECKWRITING COUNTER
3/4" = 1'-0"

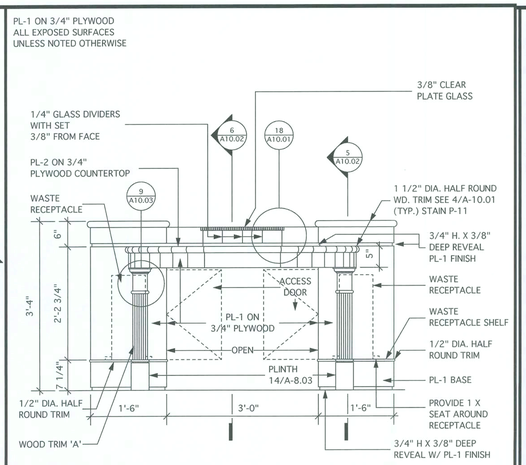

2 ELEVATION - CHECKWRITING COUNTER
3/4" = 1'-0" FRONT

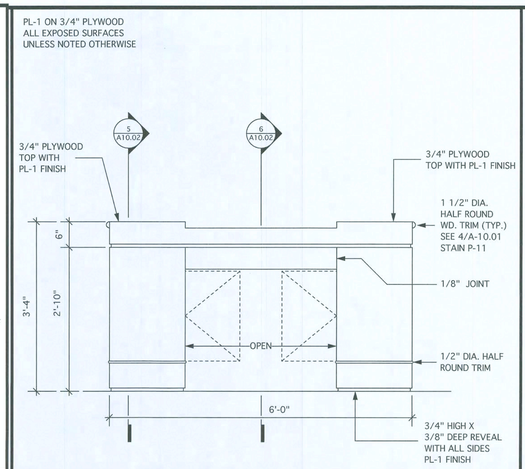

3 ELEVATION - CHECKWRITING COUNTER
3/4" = 1'-0" REAR

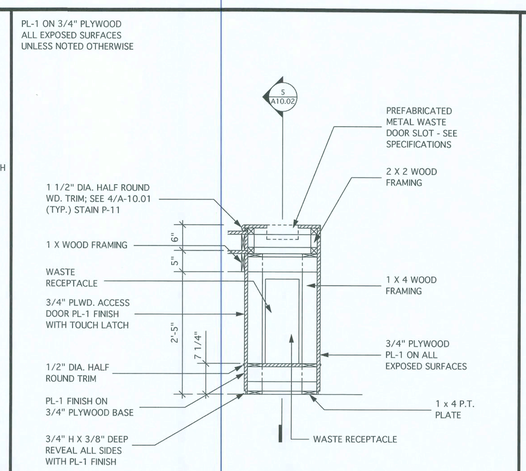

4 SECTION - CHECKWRITING COUNTER
3/4" = 1'-0"

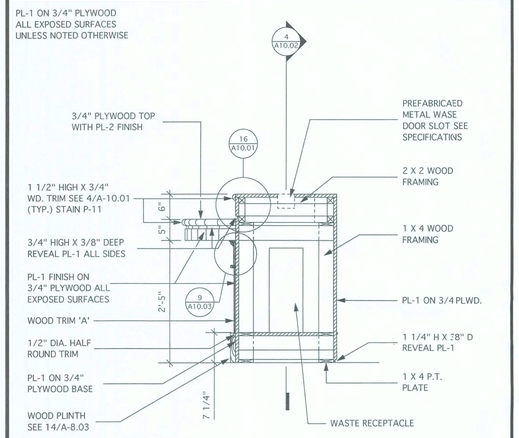

5 SECTION - CHECKWRITING COUNTER
3/4" = 1'-0"

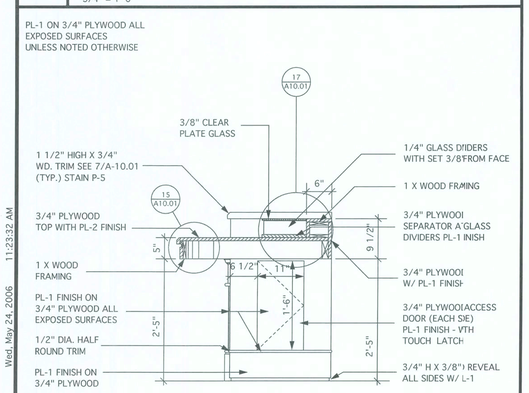

9 SECTION - CHECKWRITING COUNTER
3/4" = 1'-0"

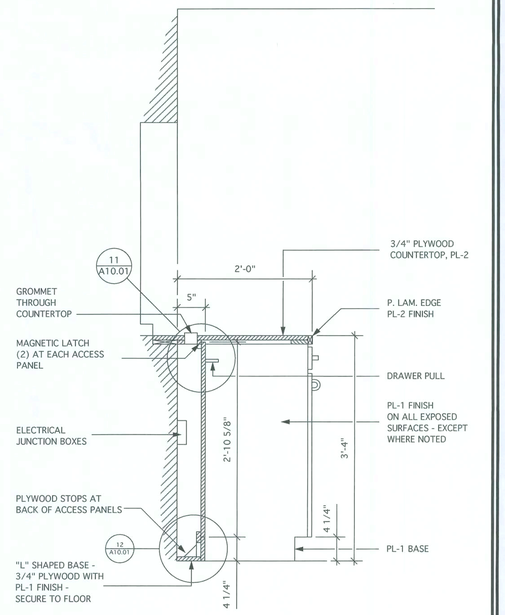

6 SECTION -ACCESS PANEL AT BASE CABINET
1" = 1'-0" AT DRIVE-IN TELLERS

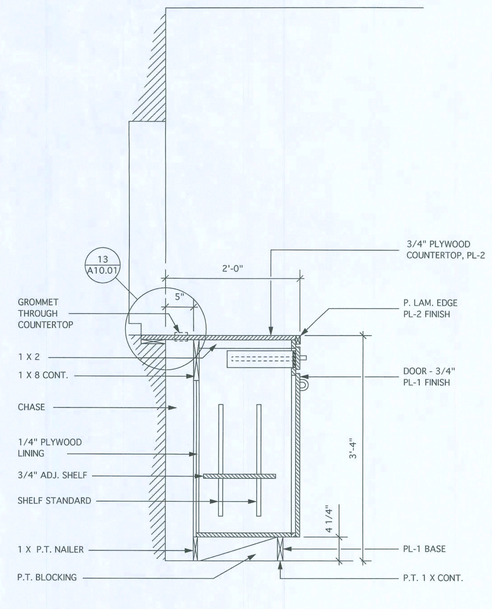

7 SECTION - BASE CABINETS AT BR WINDOW
1" = 1'-0" AT DRIVE-IN TELLERS

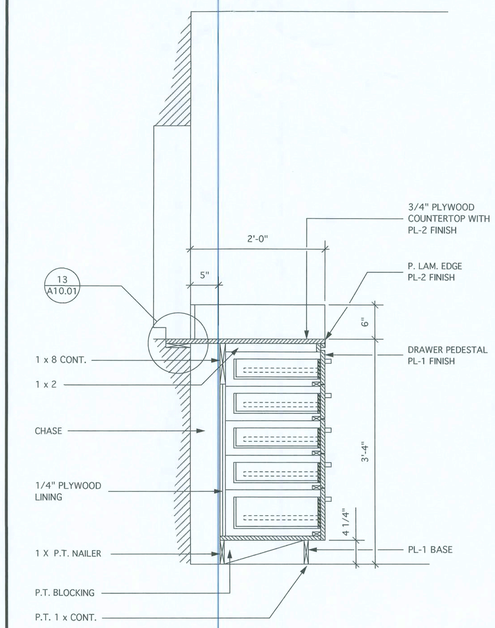

8 SECTION - DRAWER PEDESTAL
1" = 1'-0" AT DRIVE-IN TELLERS

DESIGN SERVICES INCORPORATED
1778 N. PARK AVENUE, SUITE 100, MAITLAND, FL 32751,
TELEPHONE (407) 629-5755
LICENSE NO. F00061
ARCHITECTURE INTERIOR DESIGN SPACE PLANNING

WEST OFFICE
(NEW BRANCH BANK)
LAKE CITY, FLORIDA

PEOPLES STATE BANK

GENERAL NOTES

THE DESIGN, DRAWINGS, AND SPECIFICATIONS INCORPORATED HEREIN AS AN INSTRUMENT OF PROFESSIONAL SERVICES ARE, AND SHALL BE THE SOLE PROPERTY OF DSI DESIGN SERVICES INC. THEY ARE NOT TO USED ON ANY OTHER PROJECT OR FOR ANY OTHER PURPOSE WITHOUT SPECIFIC WRITTEN PERMISSION. ALL RIGHTS RESERVED.

INTERIOR ELEVATION KEY

NORTH
ACTUAL
PLAN

MARK	DATE	REVISIONS

COMM. NO:	06003.00	DRAWN:	KLP
DATE:	02/15/06	CHECKED:	ELM
SCALE:	AS NOTED		
FILE:	06003.00-MLLWORK 02		

MILLWORK DETAILS

SEAL

ARCHITECT/CONSULTANT
EDDIE L. MUSE
JUN 07 2006
LICENSE NO. AR-12112

SHEET NUMBER
A-10.02

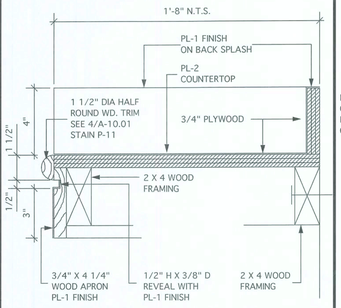

1 DETAIL - COUNTERTOP
SCALE: 3" = 1'-0" AT SAFE KEEPING #109

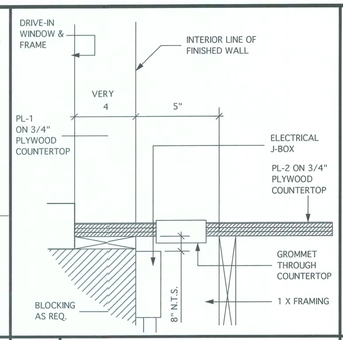

2 DETAL - GROMMET
SCALE: 3'= 1'-0" AT DRIVE-IN WINDOW

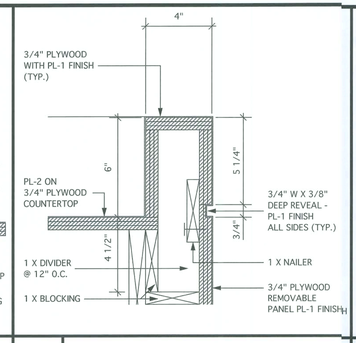

3 DETAIL - BACKSPLASH
SCALE: 3" = 1'-0" AT DRIVE-IN BACKCOUNTER

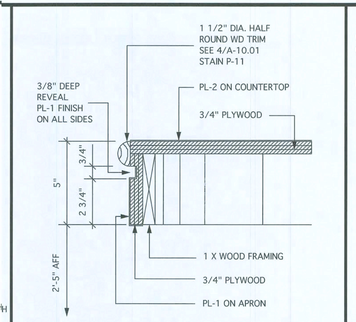

4 DETAIL - COUNTER EDGE
SCALE: 3" = 1'-0" LOWER LEVEL AT CHECKWRITING COUNTER

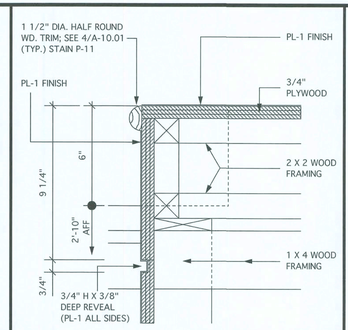

5 DETAIL - COUNTER EDGE
SCALE: 3" = 1'-0" UPPER LEVEL AT CHECKWRITING COUNTER

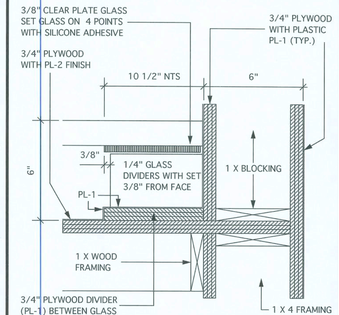

6 DETAIL - DIVIDERS
SCALE: 3" = 1'-0" AT CHECKWRITING COUNTER

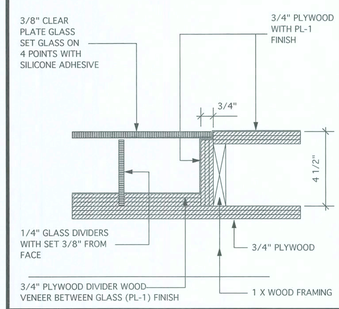

7 DETAIL - DIVIDERS
SCALE: 3" = 1'-0" AT CHECKWRITING COUNTER

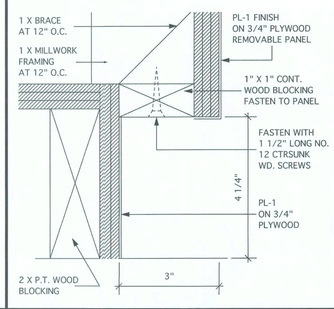

8 DETAL - REMOVABLE PANEL
SCALE: 12 FULL AT BACK COUNTER

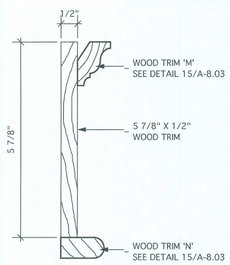

9 DETAIL - WOOD TRIM
SCALE: 1/2 FULL

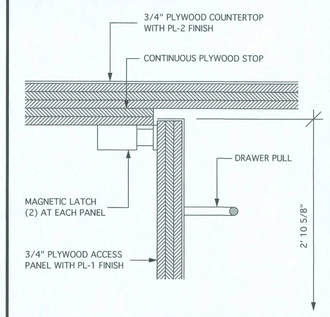

10 DETAIL - ACCESS PANEL HEAD
SCALE: 1/2 FULL

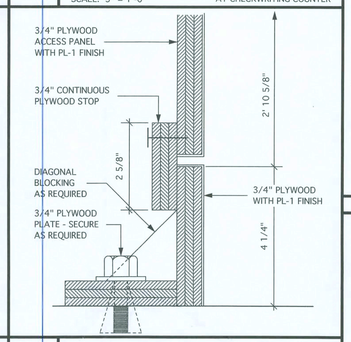

11 DETAIL - ACCESS PANELSILL
SCALE: 1/2 FULL

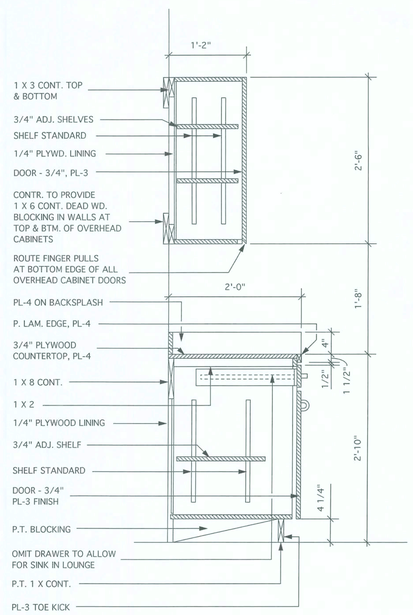

12 SECTION - WALL & BASE CABINETS
SCALE: 1" = 1'-0" AT EMPLOYEE LOUNGE #107, NIGHTDROP #114, WOR ROOM #117

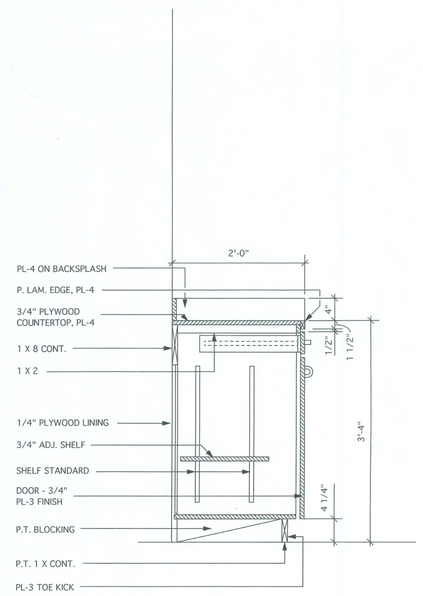

13 SECTION - WALL & BASE CABINETS
SCALE: 1" = 1'-0" AT DRIVE-IN TELLERS #113

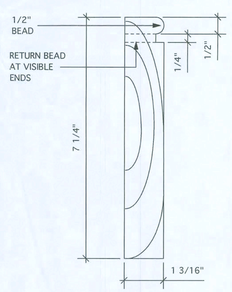

14 DETAIL - PLINTH
SCALE: 1/2 FULL

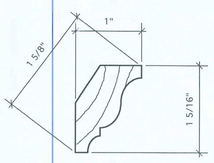

WOOD TRIM - BROWM MOLDING NO. 68

15 DETAIL - WOOD TRIM 'M'
SCALE: FULL SIZE

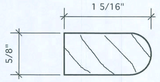

5/8" X 1 5/16" WOOD TRIM WITH 5/8" DIA. BULLNOSE EDGE (3 SIDES) EACH SIDE

16 DETAIL - WOOD TRIM 'N'
SCALE: FULL SIZE

17

DESIGN SERVICES INCORPORATED
1778 N. PARK AVENUE, SUITE 100, MAITLAND, FL 32751,
TELEPHONE(407) 629-5755
LICENSE NO. F00061
ARCHITECTURE
INTERIOR DESIGN
SPACE PLANNING

WEST OFFICE
(NEW BRANCH BANK)
LAKE CITY, FLORIDA

PEOPLES STATE BANK

GENEIAL NOTES

THE DESIGN, DRAWINGS, AND SPECIFICATIONS INCORPORATED HEREIN AS AN INSTRUMENT OF PROFESSIONAL SERVICES ARE, AND SHALL BE THE SOLE PROPERTY OF DSI DESIGN SERVICES INC.. THEY ARE NOT TO USED ON ANY OTHER PROJECT OR FOR ANY OTHER PURPOSE WITHOUT SPECIFIC WRITTEN PERMISSION. ALL RIGHTS RESERVEC

INTERIOR ELEVATION KEY

NORTH
ACTUAL
PLAN

MARK	DATE	REVISIONS

COMM. NO:	06003.00	DRAWN:	KLP
DATE:	02/15/06	CHECKED:	ELM
SCALE:	AS NOTED		
FILE:	06003.00-MILLWORK 03		

MILLWORK DETAILS

SEAL

ARCHITECT/CONSULTANT
EDDIE L. MUSE
JUN 07 2006
LICENSE NO. AR-12112

SHEET NUMBER
A-10.03

06003.00-MILLWORK 03 Wed, May 24, 2006 11:25:53 AM

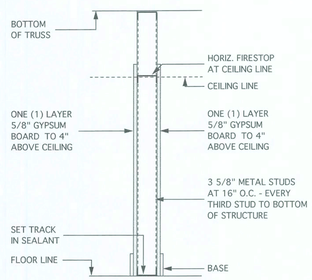

A PARTITION TYPE

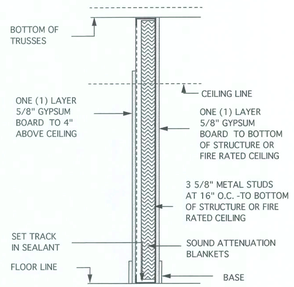

B PARTITION TYPE

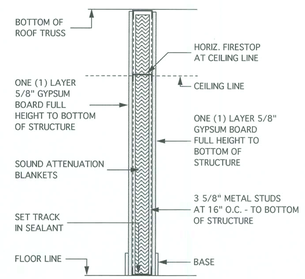

C PARTITION TYPE

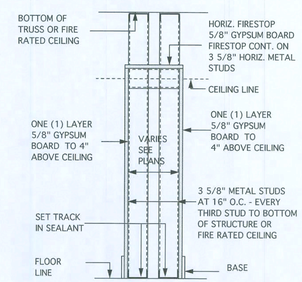

D PARTITION TYPE

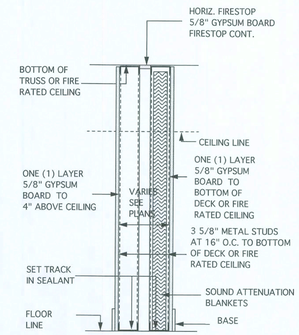

E PARTITION TYPE

F PARTITION TYPE

G PARTITION TYPE

H PARTITION TYPE

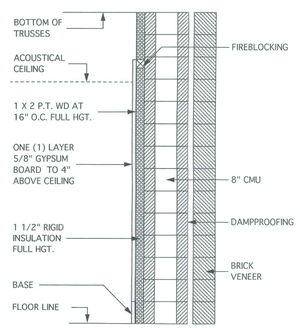

I PARTITION TYPE

J PARTITION TYPE

K PARTITION TYPE

L PARTITION TYPE

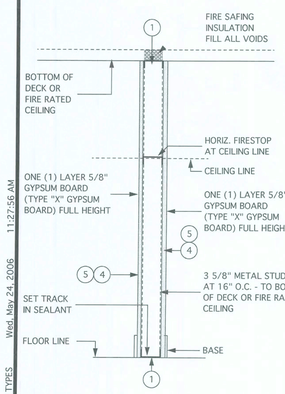

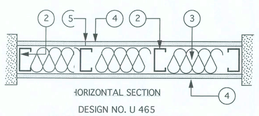

HORIZONTAL SECTION

DESIGN NO. U 465
NONBRARING WALL RATING - 1 HR.

1. FLOOR & CEILING RUNNER - (NC SHOWN) - 25 MSG (MIN) GALV STEEL 1" HIGH, RETURN LEGS 3 5/8" IN. WIDE (MIN), ATTACHED TO EOOR AND CEILING WITH FASTENERS AT 24 IN. OC. MAX..
2. STEEL STUDS - 3 5/8 IN. WIDE (IN), 1 1/4 IN. LEGS, 3/8 IN RETURN, FORMED OF 25 MSG (MN) GALV STEE MAX STUD SPACING 24 IN OC.
3. BATTS AND BLANKETS - (OPTICAL) - MINERAL WOOL OR GLASS FIBER BATTS PARTIALLY OR COMPLETELY FILLING STUD CATY.
   SEE BATTS AND BLANKETS (B2) CATEGORY FOR NAMES OF CLASSFIED COMPANIES.
4. WALLBOARD, GYPSUM* - 5/8 IN.THICK, 4 FT WIDE, ATTACHED TO STEEL STUDS AND FLOOR AND CEILING TRACK WITH 1 IN. LONGTYPE S SELF TAPPING STEEL SCREWS 8 IN. O.C. ALONG EDGES OF BOARD AND 12 IN. O.C. IN THE RLO OF THE BOARD. JOINTS ORIENTED VERTICALLY AND STAGGERED ON OPPOSITE SIDES OF THE ASSIBLY. WHEN ATTACHED TO ITEM 6 (FURRING CHANNELS), WALLBOARD IS SCREW ATTACHED TO FURRINCHANNELS WITH 1 IN. LONG, TYPE S STEEL SCREWS SPACED 12 IN. O.C.

   CANADIAN GYPSUM CO., LTD. - TYES C, SCX, SHX, WRX.
   GEORGIA-PACIFIC CORP., GYPSUDIV. - TYPE GPFS-C.
   PABCO GYPSUM CO., TYPE PG-C
   U.S. GYPSUM CO. TYPES C, FCV, 1PX2, SCX, SHC, SHX, WRC OR WRX.
5. JOINT TAPE AND COMPOUND - VYL, DRY OR PREMIXED JOINT COMPOUND, APPLIED IN TWO COATS TO JOINTS AND SCREW HEADS; PAR TAPE, 2 IN. WIDE, EMBEDDED IN FIRST LAYER OF COMPOUND OVER ALL JOINTS. AS AN ALTERATE, NOMINAL 3/32 IN. THICK GYPSUM VENIER PLASTER MAY BE APPLIED TO THE ENTIRE SURFACE OF CLASSFIEDENEER BASEBOARD. JOINTS REINFORCED.
6. FURRING CHANNELS - (OPTIONA! NOT SHOWN) - RESILIENT 25 MSG GALV STEEL FURRING CHANNELS SPACED VERTICALLY MAX 24 IN. O.C., FIXGE PORTION ATTACHED TO EACH INTERSECTING STUD WITH 1/2 IN. LONG TYPE S-12 PAN-HEAD STEEL SCRWS.

*BASED UPON UL CLASSIFICATION MKING.

M PARTITION TYPE

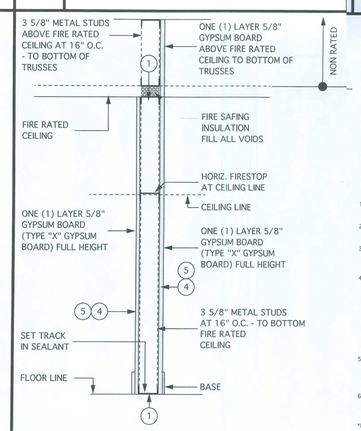

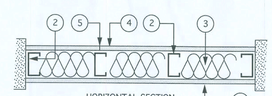

HORIZONTAL SECTION

DESIGN NO. U 465
NONBEARING WALL RATING - 1 HR.

1. FLOOR & CEILING RUNNER - (NOT SHOWN) - 25 MSG (MIN) GALV STEEL 1" HIGH, RETURN LEGS 3 5/8" IN. WIDE (MIN), ATTACHED TO FLOOR AND CEILING WITH FASTENERS AT 24 IN. OC. MAX.
2. STEEL STUDS - 3 5/8 IN. WIDE (MIN), 1 1/4 IN. LEGS, 3/8 IN RETURN, FORMED OF 25 MSG (MN) GALV STEE MAX STUD SPACING 24 INC. OC.
3. BATTS AND BLANKETS - (OPTIONAL) - MINERAL WOOL OR GLASS FIBER BATTS PARTIALLY OR COMPLETELY FILLING STUD CAVITY.
   SEE BATTS AND BLANKETS (B2.E) CATEGORY FOR NAMES OF CLASSFIED COMPANIES.
4. WALLBOARD, GYPSUM* - 5/8 IN. THICK, 4 FT WIDE, ATTACHED TO STEEL STUDS AND FLOOR AND CEILING TRACK WITH 1 IN. LONG, TYPE S SELF TAPPING STEEL SCREWS 8 IN. O.C. ALONG EDGES OF BOARD AND 12 IN. O.C. IN THE FIELD OF THE BOARD. JOINTS ORIENTED VERTICALLY AND STAGGERED ON OPPOSITE SIDES OF THE ASSEMBLY. WHEN ATTACHED TO ITEM 6 (FURRING CHANNELS), WALLBOARD IS SCREW ATTACHED TO FURRING CHANELS WITH 1 IN. LONG, TYPE S STEEL SCREWS SPACED 12 IN. O.C.

   CANADIAN GYPSUM CO., LTD. - TYPES C, SCX, SHX, WRX.
   GEORGIA-PACIFIC CORP., GYPSUM DIV. - TYPE GPFS-C.
   PABCO GYPSUM CO., TYPE PG-C
   U.S. GYPSUM CO. TYPES C, FCV, 1PX2, SCX, SHC, SHX, WRC OR WRX.
5. JOINT TAPE AND COMPOUND - VINYL, DRY OR PREMIXED JOINT COMPOUND, APPLIED IN TWO COATS TO JOINTS AND SCREW HEADS; PAPER TAPE, 2 IN. WIDE, EMBEDDED IN FIRST LAYER OF COMPOUND OVER ALL JOINTS. AS AN ALTERATE, NOMINAL 3/32 IN. THICK GYPSUM VENIER PLASTER MAY BE APPLIED TO THE ENTIRE SURFACE OF CLASSFIED VENIER BASEBOARD. JOINTS REINFORCED.
6. FURRING CHANNELS - (OPTIONAL - NOT SHOWN) - RESILIENT 25 MSG GALV STEEL FURRING CHANNELS SPACED VERTICALLY MAX 24 IN. O.C., FLANGE PORTION ATTACHED TO EACH INTERSECTING STUD WITH 1/2 IN. LONG TYPE S-12 PAN-HEAD STEEL SCREWS.

*BASED UPON UL CLASSIFICATION MARKING.

N PARTITION TYPE

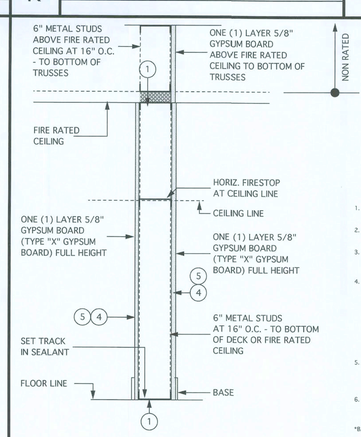

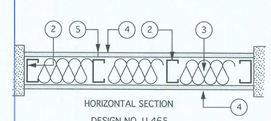

HORIZONTAL SECTION

DESIGN NO. U 465
NONBEARING WALL RATING - 1 HR.

1. FLOOR & CEILING RUNNER - (NOT SHOWN) - 25 MSG (MIN) GALV STEEL 1" HIGH, RETURN LEGS 3 5/8" IN. WIDE (MIN), ATTACHED TO FLOOR AND CEILING WITH FASTENERS AT 24 IN. OC. MAX.
2. STEEL STUDS - 3 5/8 IN. WIDE (MIN), 1 1/4 IN. LEGS, 3/8 IN RETURN, FORMED OF 25 MSG (MN) GALV STEE MAX STUD SPACING 24 INC. OC.
3. BATTS AND BLANKETS - (OPTIONAL) - MINERAL WOOL OR GLASS FIBER BATTS PARTIALLY OR COMPETELY FILLING STUD CAVITY.
   SEE BATTS AND BLANKETS (B2.E) CATEGORY FOR NAMES OF CLASSFIED COMPANIES.
4. WALLBOARD, GYPSUM* - 5/8 IN. THICK, 4 FT WIDE, ATTACHED TO STEEL STUDS AND FLOOR AND CEILING TRACK WITH 1 IN. LONG, TYPE S SELF TAPPING STEEL SCREWS 8 IN. O.C. ALONG EDGES OF BOARD AND 12 IN. O.C. IN THE FIELD OF THE BOARD. JOINTS ORIENTED VERTICALLY AND STAGGERED ON OPPOSITE SIDES OF THE ASSEMBLY. WHEN ATTACHED TO ITEM 6 (FURRING CHANNELS), WALLBOARD IS SCREW ATTACHED TO FURRING CHANELS WITH 1 IN. LONG, TYPE S STEEL SCREWS SPACED 12 IN. O.C.

   CANADIAN GYPSUM CO., LTD. - TYPES C, SCX, SHX, WRX.
   GEORGIA-PACIFIC CORP., GYPSUM DIV. - TYPE GPFS-C.
   PABCO GYPSUM CO., TYPE PG-C
   U.S. GYPSUM CO. TYPES C, FCV, 1PX2, SCX, SHC, SHX, WRC OR WRX.
5. JOINT TAPE AND COMPOUND - VINYL, DRY OR PREMIXED JOINT COMPOUND, APPLIED IN TWO COATS TO JOINTS AND SCREW HEADS; PAPER TAPE, 2 IN. WIDE, EMBEDDED IN FIRST LAYER OF COMPOUND OVER ALL JOINTS. AS AN ALTERATE, NOMINAL 3/32 IN. THICK GYPSUM VENIER PLASTER MAY BE APPLIED TO THE ENTIRE SURFACE OF CLASSFIED VENIER BASEBOARD. JOINTS REINFORCED.
6. FURRING CHANNELS - (OPTIONAL - NOT SHOWN) - RESILIENT 25 MSG GALV STEEL FURRING CHANNELS SPACED VERTICALLY MAX 24 IN. O.C., FLANGE PORTION ATTACHED TO EACH INTERSECTING STUD WITH 1/2 IN. LONG TYPE S-12 PAN-HEAD STEEL SCREWS.

*BASED UPON UL CLASSIFICATION MARKING.

O PARTITION TYPE

DESIGN SERVICES INCORPORATED
1778 N. PARK AVE., SUITE 100, MAITLAND, FL 32751,
TELEPHONE(407) 629-5755
LICENSE NO. F00061
ARCHITECTURE
INTERIOR DESIGN
SPACE PLANNING

WEST OFFICE
(NEW BRANCH BANK)
LAKE CITY, FLORIDA

PEOPLES STATE BANK

GENERAL NOTES

THE DESIGN, DRAWINGS, AND SPECIFEATIONS INCORPORATED HEREIN AS AN INSTRUMENT OF PROFESSIONAL SERVICES ARE, AND SHALL BE THE SOLE PROPERTY OF DSI DESIGN SERVICES IRC.. THEY ARE NOT TO USED ON ANY OTHER PRDJECT OR FOR ANY OTHER URPOSE WITHOUT SPECIFIC WRITTEN PERMISSION. ALL RIGHTS RESERVED.

INTERIOR ELEVATION KEY

NORTH
ACTUAL
PLAN

MARK	DATE	REVISIONS

COMM. NO:	06003.00	DRAWN:	KLP
DATE:	02/15/06	CHECKED:	ELM
SCALE:	NO SCALE		
FILE:	06003.00-FARTITION TYPES		

PARTITION TYPES

SEAL

ARCHITECT/CONSULTANT

EDDIE L. MUSE
JUN 07 2006
LICENSE NO. AR-12112

SHEET NUMBER

A-11.00

06003.00-PARTITION TYPES Wed, May 24, 2006 11:27:56 AM

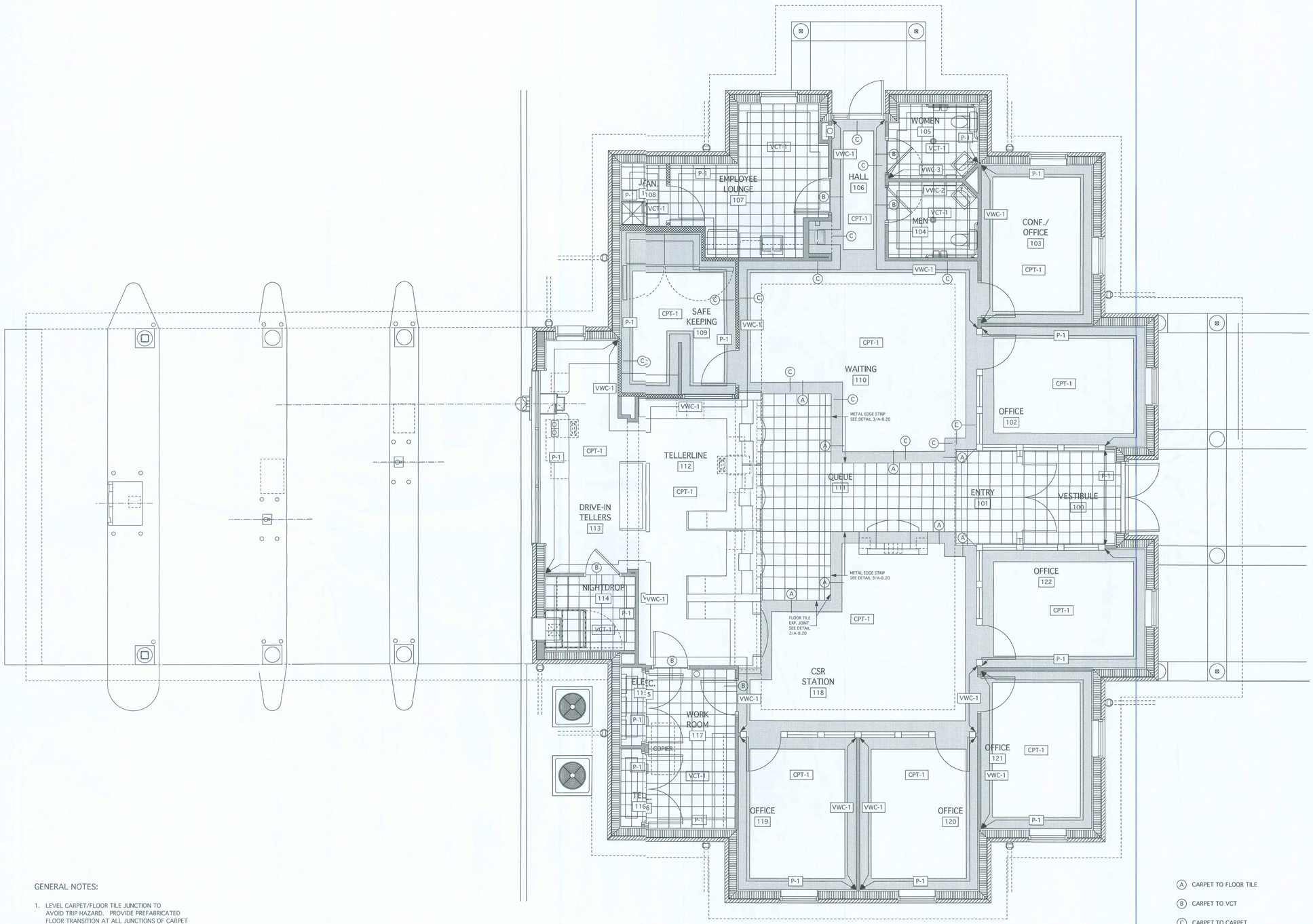

GENERAL NOTES:

1. LEVEL CARPET/FLOOR TILE JUNCTION TO AVOID TRIP HAZARD. PROVIDE PREFABRICATED FLOOR TRANSITION AT ALL JUNCTIONS OF CARPET AND FLOOR TILE.

(A) CARPET TO FLOOR TILE

(B) CARPET TO VCT

(C) CARPET TO CARPET

FINISH PLAN

SCALE: 1/4" = 1'-0"

06003.00-FLOOR PLANS S-1-06.mcd Wed, May 24, 2006 9:28:15 AM

DESIGN SERVICES INCORPORATED
1778 N. PARK AVE., SUITE 100, MAITLAND, FL 32751,
TELEPHONE(407) 626-5755
LICENSE NO. F00061
ARCHITECTURE
INTERIOR DESIGN
SPACE PLANNING

WEST OFFICE
(NEW BRANCH BANK)
LAKE CITY, FLORIDA

PEOPLES STATE BANK

GENERAL NOTES

THE DESIGN, DRAWINGS, AND SPECIFICATIONS INCORPORATED HEREIN AS AN INSTRUMENT OF PROFESSIONAL SERVICES ARE, AND SHALL BE THE SOLE PROPERTY OF DSI DESIGN SERVICES INC. THEY ARE NOT TO USED ON ANY OTHER PROJECT OR FOR ANY OTHR PURPOSE WITHOUT SPECIFIC WRITTEN PERMISSION. ALL RIGHTS RESERVD.

INTERIOR ELEVATION KEY

NORTH
ACTUAL
PLAN

MARK	DATE	REVISIONS

COMM. NO:	06003.00	DRAWN:	KLP
DATE:	02/15/06	CHECKED:	ELM
SCALE:	1/4" = 1'-0"	© 2006	
FILE:	06003.00FLOOR PLANS S-1-06.mcd		

FINISH PLAN

SEAL

ARCHITECT/CONSULTANT
EDDIE L. MUSE
JUN 07 2006
LICENSE NO. AR-12112

SHEET NUMBER
I-1.10

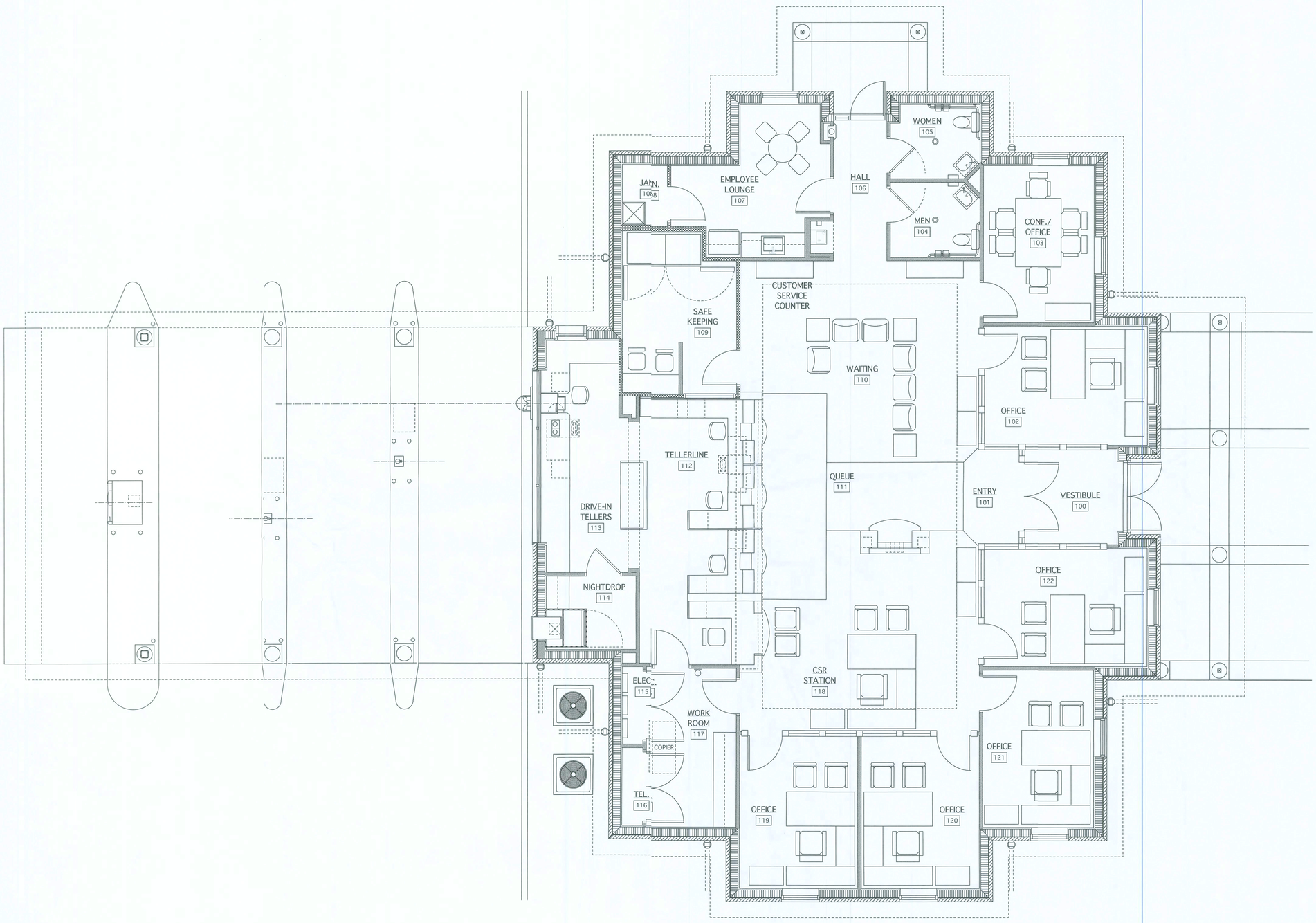

FURNITURE/EQUIPMENT PLAN

SCALE: 1/4" = 1'-0"

06003.00-FLOOR PLANS 5-1-06.mcd Wed, May 24, 2006 9:29:01 AM

DESIGN SERVICES INCORPORATED
1778 N. PARK AVE., SUITE 100, MAITLAND, FL 32751,
TELEPHONE(407) 626-5755
LICENSE NO. F00061
ARCHITECTURE
INTERIOR DESIGN
SPACE PLANNING

WEST OFFICE
(NEW BRANCH BANK)
LAKE CITY, FLORIDA

PEOPLES STATE BANK

GENERAL NOTES

THE DESIGN, DRAWINGS, AND SPECIFICATIONS INCORPORATED HEREIN AS AN INSTRUMENT OF PROFESSIONAL SERVICES ARE, AND SHALL BE THE SOLE PROPERTY OF DSI DESIGN SERVICES IC. THEY ARE NOT TO USED ON ANY OTHER PROJECT OR FOR ANY OTHER PURPOSE WITHOUT SPECIFIC WRITTEN PERMISSION. ALL RIGHTS RESERVED.

1 2 3 4

INTERIOR ELEVATION KEY

NORTH
ACTUAL
PLAN

MARK	DATE	REVISIONS

COMM. NO:	06003.00	DRAWN:	KLP
DATE:	02/15/06	CHECKED:	ELM
SCALE:	1/4" = 1'-0"	© 2006	
FILE:	06003.00-FLOOR PLANS 5-1-06.mcd		

FURNITURE/EQUIPMENT PLAN

SEAL

ARCHITECT/CONSULTANT
EDDIE L. MUSE
JUN 07 2006
LICENSE NO. AR-12112

SHEET NUMBER
I-2.10

STRUCTURAL ABBREVIATONS

AB	ANCHOR BOLT
ACT	ACTUAL
ADDN	ADDITIONAL
ADH	ADHESIVE
ADJ	ADJACENT
AFF	ABOVE FINISHED FLOOR
AHU	AIR HANDLING UNIT
ALUM	ALUMINUM
ALT	ALTERNATE
ANCH	ANCHORAGE, ANCHOR
APPD	APPROVED
ARCH	ARCHITECT,(URAL)
B–	CONC. BEAM
B/	BOTTOM OF
B/B	BACK TO BACK
BIT	BITUMINOUS, BITUMASTIC
BLDG	BUILDING
BM	BEAM
BOT	BOTTOM
BRDG	BRIDGING
BRG	BEARING
BLK	BLOCK
BTWN	BETWEEN
BSMT	BASEMENT
C	CHANNEL
CANT	CANTILEVER
CEN	CENTER, ED
C/C	CENTER TO CENTER
CHAM	CHAMFER
CIRC	CIRCULAR
CJ	CONTROL JOINT
CLR	CLEAR
CMU	CONCRETE MASONRY UNITS
COL	COLUMN
CONC	CONCRETE
CONN	CONNECTION
CONST	CONSTRUCTION
CONT	CONTINUOUS, ATION
CONTR	CONTRACTOR
COORD	COORDINATE, TION
CTRD	CENTERED
D	DEPTH, DISTANCE
DBA	DEFORMED BAR ANCHOR
DBL	DOUBLE
DBS	DOWEL BAR SPLICER
DET	DETAIL
DIA	DIAMETER
DIAG	DIAGONAL
DIM	DIMENSION
DL	DEAD LOAD
DN	DOWN
DSGN	DESIGN
DWGS	DRAWINGS
DWL	DOWEL
E	EAST
EA	EACH
EB	EXPANSION BOLT
EE	EACH END
EF	EACH FACE
EJ	EXPANSION JOINT
EL	ELEVATION, ELEVATED
ELEV	ELEVATOR
ENGR	ENGINEER
EQ	EQUAL
EQUIP	EQUIPMENT
ES	EACH SIDE
EW	EACH WAY
EXP	EXPANSION
EXIST	EXISTING
EXT	EXTERIOR
F–	FOOTING MARK
FC	FILLED CELL
FF	FINISHED FLOOR
FIN	FINISH
FLG	FLANGE
FLR	FLOOR
FDN	FOUNDATION
FRMG	FRAMING
FS	FARSIDE
FT	FOOT, FEET
FTG	FOOTING
FV	FIELD VERIFY
GA	GAUGE
GALV	GALVANIZED
GL	GLU LAM
HC	HIGH CHAIR
HK	HOOK
HORIZ	HORIZONTAL
HP	HIGH POINT
HSA	HEADED STUD ANCHOR
HSB	HIGH STRENGTH BOLT
HT	HEIGHT
ID	INSIDE DIAMETER
IF	INSIDE FACE
IN	INCH
INCL	INCLUDE, ING
INSUL	INSULATE, D, ION
INT	INTERIOR
INTERM	INTERMEDIATE
JST	JOIST
JT	JOINT
k	KIP
L–	ANGLE
LB	POUND
LG	LONG
LL	LIVE LOAD
LLH	LONG LEG HOIZONTAL
LLV	LONG LEG VERTICAL
LONG	LONGITUDINAL
LP	LOW POINT
LSL	LONG SLOTTEI HOLES
LT	LIGHT
LTWT	LIGHTWEIGHT
MAS	MASONRY
MAX	MAXIMUM
MB	MACHINE BOL
MECH	MECHANICAL
MET	METAL
MEZZ	MEZZANINE
MFR	MANUFACTURR
MID	MIDDLE
MIN	MINIMUM
MISC	MISCELLANEOIS
MJ	MASONRY JOIT
MO	MASONRY OPNING
N	NORTH
NIC	NOT IN CONTIACT
NO	NUMBER
NS	NEAR SIDE
NTS	NOT TO SCAL
O/O	OUT TO OUT
OC	ON CENTER
OD	OUTSIDE DIAMTER
OF	OUTSIDE FACE
OPNG	OPENING
OPP	OPPOSITE
OSL	OUTSTANDINGLEG
OVS	OVERSIZE HOES
PAF	POWDER ACTIATED FASTENER
PL	PLATE
PLF	POUNDS PER LINEAL FOOT
PROJ	PROJECTION
PSF	POUNDS PER SQUARE FOOT
PSI	POUNDS PER SQUARE INCH
PT	PRESSURE TRATED
PVC	POLYVINYL CLORIDE
R/W	REINFORCED WITH
RAD	RADIUS
REF	REFERENCE
REINF	REINFORCE, MENT
REQ	REQUIRE, D, MENT
RET	RETURN
REV	REVISION
RP	RADIUS POINT
RT	RIGHT
RTU	ROOF TOP UNT
S	SOUTH
SA	SLAB BOLSTE
SB	SLEEVE ANCHR
SCHED	SCHEDULE
SECT	SECTION
SF–	STEP FOOTING
SIM	SIMILAR
SPEC	SPECIFICATIOS
SP	SPACING,ES
SQ	SQUARE
SSL	SHORT SLOTTD HOLES
SS	STAINLESS STEL
STD	STANDARD
STIFF	STIFFENERS
STL	STEEL
STRL	STRUCTURAL
SYMM	SYMMETRICAL
T	TIES
t	THICKNESS
T/	TOP OF
TB–	TIE BEAM
TC	TIE COLUMN
T&B	TOP AND BOTOM
TEMP	TEMPORARY, EMPERATURE
TERM	TERMINATE
TOL	TOLERANCE
TRAN	TRANSVERSE
TS	TUBE STEEL
TYP	TYPICAL
UNO	UNLESS NOTE OTHERWISE
U/S	UNDERSIDE
VERT	VERTICAL
W	WIDTH, WEST, WIDE FLANGE
W/	WITH
W/O	WITHOUT
WF–	WALL FOOTING
WP	WORKING POIN
WS	WATERSTOP
WT	WEIGHT
WWF	WELDED WIRE FABRIC

STANDARDS

ACI	AMERICAN CONCRETE INSTITUTE
AISC	AMERICAN INSTITUTE OF STEEL CONSTRUCTION
AITC	AMERICAN INSTITUTE OF TIMBER CONSTRUCTION
ANSI	AMERICAN NATIONAL STANDARDS INSTITUTE
ASTM	AMERICAN SOCIETY OF TESTING AND MATERIALS
AWS	AMERICAN WELDING SOCIETY
CRSI	CONCRETE REINFORCING STEEL INSTITUTE
NFPA	NATIONAL FOREST PRODUCTS ASSOCIATION
PCI	PRESTRESSED CONCRETE INSTITUTE
PTI	POST TENSIONING INSTITUTE
UL	UNDERWRITER'S LABORATORY

SYMBOLS

&	AND
@	AT
℄	CENTERLINE
ø	DIAMETER
	ELEVATION
#	NUMBER, POUNDS
	CONSTRUCTION JT.
	SAW CUT JOINT
PL	PLATE

STRUCTURAL DESIGN CRITERIA

D-1 CODE - FLORIDA BUILDING CODE 2004 EDITION.

D-2 DESIGN LIVE LOADS:

ROOF 20 PSF

D-3 DESIGN WIND SPEED: 110 MPH
IMPORTANCE FACTOR: 1.0
BUILDING CATEGORY: III
EXPOSURE: B
INTERNAL PRESURE COEFICIENT: (+/-) .18
COMPONENTS AND CLADDING PRESSURE: (SEE SHT. S-0.01)

D-4 SEISMIC: ZONE 0

D-5 ALLOWABLE SOIL BEARING PRESSURE 3000 PSF PER REPORT BY: 'CAL-TECH TESTING', DATED APRIL 26, 2006

GENERAL NOTES

G-1 THE GENERAL CONTRACTOR SHALL REVIEW ALL PROJECT DOCUMENTS, PRIOR TO FABRICATION AND START OF CONSTRUCTION. REPORT ANY DISCREPANCIES TO ARCHITECT OR STRUCTURAL ENGINEER PRIOR TO PROCEEDING WITH WORK.

G-2 THE GENERAL CONTRACTOR SHALL PROVIDE ALL MEASURES NECESSARY TO PROTECT THE STRUCTURE AND WORKERS DURING CONSTRUCTION, INCLUDING ADEQUATE BRACING OF STRUCTURAL MEMBERS, WALLS AND OTHER NON-STRUCTURAL ELEMENTS TO WITHSTAND CONSTRUCTION LOADS INCLUDING WIND.

G-3 GENERAL CONTRACTOR SHALL PROTECT EXISTING FACILITIES, STRUCTURES AND UTILITY LINES FROM ALL DAMAGE DURING CONSTRUCTION.

G-4 NO STRUCTURAL MEMBER SHALL BE CUT, NOTCHED OR OTHERWISE REDUCED IN SIZE OR STRENGTH WITHOUT PRIOR APPROVAL IN WRITING FROM THE STRUCTURAL ENGINEER.

G-5 THE GENERAL CONTRACTOR SHALL COORDINATE STRUCTURAL AND OTHER DRAWINGS WHICH ARE PART OF THE CONTRACT DOCUMENTS FOR ANCHORED, EMBEDDED OR SUPPORTED ITEMS WHICH MAY AFFECT THE STRUCTURAL DRAWINGS.

G-6 ALL DETAILS AND SECTIONS ON THE DRAWINGS ARE INTENDED TO BE TYPICAL AND SHALL BE CONSTRUED TO APPLY TO ANY SIMILAR SITUATION ELSEWHERE ON THE PROJECT EXCEPT WHERE A SEPARATE DETAIL IS SHOWN.

G-7 THE INTENTION OF THE PLANS AND SPECIFICATIONS IS TO PROVIDE ALL NECESSARY DETAILS TO CONSTRUCT A COMPLETE STRUCTURE. WHEN SPECIFIC INFORMATION IS MISSING OR IS IN CONFLICT, THE CONTRACTOR SHALL USE A SIMILAR DETAIL AND/OR THE MORE COSTLY ITEM OF CONFLICT. THE CONFLICTS SHALL BE BROUGHT TO THE ATTENTION OF THE ARCHITECT/ENGINEER.

G-8 REPRODUCTION OF THE CONTRACT DOCUMENTS USED FOR THE PREPARATION AND SUBMITTAL OF SHOP DRAWINGS WILL NOT BE PERMITTED. REPRODUCED DRAWINGS WILL BE RETURNED UNCHECKED FOR RESUBMITTAL.

G-9 THE GENERAL CONTRACTOR SHALL REVIEW ALL SHOP DRAWINGS FOR CONFORMANCE WITH THE CONTRACT DOCUMENTS, COMPLETENESS AND SHALL ANSWER ALL CONTRACTOR RELATED QUESTIONS. GENERAL CONTRACTOR SHALL STAMP AND INITIAL ALL SHEETS PRIOR TO SUBMITTING SHOP DRAWINGS TO ARCHITECT/ENGINEER FOR REVIEW. NON-COMPLIANCE WITH THIS REQUIREMENT WILL RESULT IN REJECTION OF SUBMITTAL.

G-10 ALL SHOP DRAWINGS SHALL CONSIST OF 4 BLUE LINES, ALL OTHER SETS OF BLUE LINES WILL BE DISCARDED.

SHALLOW FOUNDATIONS

SF-1 SOIL TO BE STRIPPED, COMPACTED AND TESTED IN ACCORDANCE WITH THE RECOMMENDATIONS OF THE SOILS ENGINEER AND PROJECT SPECIFICATIONS.

SF-2 CENTER ALL FOOTINGS UNDER THEIR RESPECTIVE COLUMNS OR WALLS, UNLESS OTHERWISE SHOWN ON PLANS. MAXIMUM MISPLACEMENT OR ECCENTRICITY - 2". TOLERANCE FOR MISLOCATION OF COLUMN DOWELS OR ANCHOR BOLTS TO BE PER ACI OR AISC STANDARDS.

SF-3 HORIZONTAL JOINTS IN FOOTINGS WILL NOT BE PERMITTED.

SF-4 WHERE VERTICAL CONSTRUCTION JOINTS OCCUR IN CONTINUOUS FOOTINGS, PROVIDE A MINIMUM CONTINUOUS 2x4 KEYWAY ACROSS JOINT FOR EACH 12" OF DEPTH.

SF-5 CONTRACTOR TO NOTIFY ARCHITECT/ENGINEER IF SOIL CONDITIONS ARE UNCOVERED THAT PREVENT THE REQUIRED SOIL BEARING PRESSURE FROM BEING OBTAINED.

SF-6 COORDINATE PLUMBING LINE WITH FOOTING LOCATIONS FOR INTERFERENCE. INDIVIDUAL FOOTINGS SHOULD BE LOWERED WITH THE PRIOR APPROVAL OF THE STRUCTURAL ENGINEER. CONTINUOUS WALL FOOTINGS SHOULD BE STEPPED AS DETAILED ON THE DRAWINGS.

SF-7 EXCAVATING UNDER OR NEAR IN - PLACE FOOTINGS/FOUNDATIONS WHICH DISTURBS THE COMPACTED SOIL BENEATH THE FOOTINGS/ FOUNDATIONS WILL NOT BE PERMITTED.

SF-8 REINFORCING SHALL BE SUPPORTED ON PRECAST PADS. DOWELS FOR COLUMNS AND FILLED CELLS SHALL BE SECURED IN PLACE PRIOR TO POURING CONCRETE. USE TEMPLATES FOR SETTING COLUMN DOWELS AND ANCHOR BOLTS.

REINFORCED CONCRETE

RC-1 ALL CONCRETE DESIGN AND PLACEMENT SHALL BE IN STRICT ACCORDANCE WITH THE ACI 'BUILDING CODE REQUIREMENTS FOR REINFORCED CONCRETE', ACI 318.

RC-2 STRUCTURAL CONCRETE SHALL CONFORM TO ACI 301 SPECIFICATIONS AND SHALL DEVELOP A MINIMUM COMPRESSIVE STRENGTH OF 3000 PSI AT 28 DAYS.

RC-3 USE REGULAR WEIGHT CONCRETE.

RC-4 STRUCTURAL CONCRETE SHALL CONFORM TO ACI 301 AND HAVE THE FOLLOWING SLUMPS & AGGREGATE REQUIREMENTS:

LOCATION	SLUMP	MAX. AGGREGATE
FOOTINGS	4" ± 1"	ASTM #57
COLUMNS	5" ± 1"	ASTM #57
BEAMS AND SLABS	5" ± 1"	ASTM #57
FILLED CELLS	8" ± 1"	ASTM #89 PEAROCK

FLYASH MAYBE SUBSTITUTED FOR CEMENT AT A MAXIMUM OF 20% (PERCENT) OF THE TOTAL CEMENT CONTENT. DO NOT USE FLYASH IN FILLED CELL CONCRETE.

RC-5 THE USE OF JITTERBUGS TO CONSOLIDATE CONCRETE WILL NOT BE PERMITTED.

RC-6 ALL PUMPED CONCRETE WITH #57 AGGREGATE IS TO CONTAIN A HIGH RANGE WATER REDUCING AGENT. MINIMUM SIZE OF DISCHARGE TO BE 4" I.D. SEE SPECIFICATIONS FOR REQUIRED MIX DESIGN. A 2" I.D. DISCHARGE MAY BE USED WITH #89 AGGREGATE.

RC-7 ALL REINFORCING STEEL SHALL BE DETAILED, FABRICATED AND INSTALLED IN ACCORDANCE WITH ACI 318 AND ACI DETAILING MANUAL, ACI-315 LATEST EDITION.

RC-8 REINFORCING STEEL SHALL BE NEW DEFORMED BARS, FREE FROM RUST, SCALE AND OIL, CONFORMING TO ASTM A-615, GRADE 60, WITH MINIMUM YIELD STRENGTH = 60,000 PSI.

RC-9 ALL SLABS ON GRADE SHALL BE REINFORCED WITH POLYPROPYLENE FIBERS IN ACCORDANCE WITH MANUFACTURER'S WRITTEN RECOMMENDATIONS AND SPECIFICATIONS.

RC-10 PROVIDE THE FOLLOWING CONCRETE COVERAGES OVER REINFORCING:

FOOTINGS	BOTTOMS & UNFORMED EDGES	3" CLR
BEAMS & COLS.	TIES	1-1/2" CLR

RC-11 SHOP DRAWINGS FOR PLACEMENT SHALL BE SUBMITTED FOR REVIEW PRIOR TO REBAR FABRICATION.

RC-12 NO REINFORCING BARS SHALL BE CUT TO ACCOMODATE THE INSTALLATION OF ANCHORS, EMBEDS OR OTHER ITEMS.

RC-13 USE THE STRUCTURAL DRAWINGS(INCLUDING REVISIONS AND ADDENDA) IN CONJUNCTION WITH REVIEWED SHOP DRAWINGS FOR PLACEMENT OF REINFORCING.

RC-14 AT CHANGES IN DIRECTION OF BLOCK BEAMS & STRIP FOOTINGS, PROVIDE CORNER BARS OF SAME SIZE AND QUANTITY(U.N.O.) AS HORIZONTAL STEEL. REFER TO TYPICAL DETAIL.

RC-15 ALL EMBEDDED ITEMS SHALL BE SECURELY TIED IN PLACE PRIOR TO CONCRETE PLACEMENT.

RC-16 EXPANSION BOLTS SHALL BE HILTI KWIK BOLTS OR APPROVED EQUIVALENT, INSTALLED IN ACCORDANCE WITH MANUFACTURER'S RECOMMENDATIONS.

MASONRY

M-1 MASONRY CONSTRUCTION SHALL CONFORM TO ACI 'BUILDING CODE REQUIREMENTS FOR MASONRY STRUCTURES' (ACI/ASCE 530) AND 'SPECIFICATIONS FOR MASONRY STRUCTURES' (ASCE 530) EXCEPT AS AMENDED BELOW.

M-2 STRUCTURE HAS BEEN DESIGNED AS A BEARING WALL STRUCTURE.

M-3 USE TYPE 'S' MORTAR WITH MINIMUM COMPRESSIVE STRENGTH OF 1800 PSI.

M-4 MASONRY UNITS SHALL CONFORM TO ASTM C90 WITH A MINIMUM COMPRESSIVE STRENGTH OF 1900 PSI ON NET SECTION, TO PROVIDE NET AREA COMPRESSIVE STRENGTH OF MASONRY (F'm) OF 1500 PSI.

M-5 PROVIDE FILLED CELLS AS SHOWN ON PLANS. IN ADDITION, PROVIDE FILLED CELLS ADJACENT TO ALL OPENINGS AND AT ANCHORAGE OF CONNECTIONS.

M-6 PROVIDE FULL MORTAR BEDDING AROUND ALL FILLED CELLS WITH VERTICAL REINFORCING.

M-7 REINFORCING FOR FILLED CELLS SHALL CONFORM TO ASTM A615, GRADE 60. PROVIDE THE FOLLOWING LAP SPLICES FOR REINFORCING:

#5 BARS 32"

M-8 ALL FILLED CELLS AND COLUMNS SHALL BE POURED AT LEAST TWO(2) HOURS PRIOR TO POURING BEAMS AND LINTELS.

M-9 REINFORCE WALL WITH LADDER TYPE REINFORCEMENT (DUR-O-WALL' OR EQUAL) IN BED JOINTS AT 16" O.C. MEASURED VERTICALLY. LAP SPLICE ALL HORIZONTAL WALL REINFORCING 6". PROVIDE PREFABRICATED 'TEE' OR CORNER SECTIONS AT ALL INTERSECTING WALLS.

M-10 REFER TO TYPICAL WALL SECTIONS FOR MAXIMUM CONSTRUCTION HEIGHT OF MASONRY WALLS. PROVIDE CLEAN-OUT HOLES AT BASE OF FILLED CELL WHEN THE CONCRETE POUR EXCEEDS 5 FEET IN HEIGHT.

M-11 CONCRETE FOR FILLED CELLS SHALL BE VIBRATED DURING PLACEMENT USING A 'PENCIL' TYPE VIBRATOR.

M-12 UNLESS NOTED OTHERWISE, PROVIDE THE FOLLOWING LINTELS OVER ALL MASONRY WALL OPENINGS:

1. OPENING LESS THAN OR EQUAL TO 6'-0": 8" PRECAST CONCRETE 'U' LINTEL R/W 2-#5 FILLED SOLID WITH CONCRETE. EXTEND REINFORCING 8" PAST OPENING FACE.
2. OPENING GREATER THAN 6'-0" & LESS THAN 10'-0": 8" PRECAST CONC. 'U' LINTEL & 8" KNOCK-OUT COURSE R/W 2-#5 EA. COURSE FILLED SOLID W/CONCRETE. EXTEND REINFORCING 8" PAST OPENING.

WOOD

WD-1 ALL WOOD CONSTRUCTION AND CONNECTIONS SHALL CONFORM TO AITC 'AMERICAN INSTITUTE OF TIMBER CONSTRUCTION' MANUAL, 4TH EDITION, AND THE 'NATIONAL DESIGN SPECIFICATIONS' FOR WOOD CONSTRUCTION, 1991 EDITION, AND STANDARD BUILDING CODE, CHAPTER 17.

WD-2 ALL MEMBER SIZES ARE TO BE SHOWN ON DRAWINGS AND PROVIDE THE FOLLOWING MINIMUM PROPERTIES:

MEMBER	SPECIES	FbKSI	E(KSI)
JOISTS	SOUTHERN PINE	1.5	1,600
STUDS	SOUTHERN PINE	1.5	1,600
OTHER	SOUTHERN PINE	1.25	1,600

WD-3 ALL WOOD IN CONTACT WITH CONCRETE OR MASONRY SHALL BE PRESSURE TREATED.

WD-4 ALL BOLTS FOR BOLTED CONNECTIONS SHALL CONFORM TO A307. USE WASHERS BETWEEN WOOD AND ALL BOLT HEAD AND NUTS.

WD-5 ALL METAL WOOD CONNECTORS SHALL BE AS MANUFACTURED BY SIMPSON STRONG TIE CO. OR APPROVED EQUAL AND SHALL BE GALVANIZED. THE NAILING PATTERN SPECIFIED IN THE LATEST SIMPSON CATALOG SHALL BE USED.

WD-6 WHERE BEAMS OR TRUSSES ARE FORMED OF 2 OR MORE MEMBERS THEY SHALL BE FULL LENGTH AND FASTENED TOGETHER PER CHAPTER 17 OF THE STANDARD BUILDING CODE.

WD-7 ROOF PLYWOOD SHALL BE 5/8" CDX WITH 10d NAILS @ 6" O.C. MAX AT ALL SUPPORTED EDGES. SPACE NAILS 12" O.C. ALONG INTERMEDIATE FRAMING MEMBERS. ROOF PLYWOOD SHALL HAVE STAGGERED END JOINTS.

DESIGN SERVICES INCORPORATED
1778 N. PARK AVE., SUITE 100, MAITLAND, FL 32751,
TELEPHONE(407) 629-5755
LICENSE NO. F00061
ARCHITECTURE INDUSTRIAL DESIGN SPACE PLANNING

PEOPLES STATE BANK

WEST OFFICE
(NEW BRANCH BANK)
LAKE CITY, FLORIDA

GENERAL NOTES

1 2 3 4

INTERIOR ELEVATION KEY

NORTH
ACTUAL
PLAN

MARK	DATE	REVISIONS

COMM. NO.	0603.00	DRAWN	S.L.
DATE:	02/5/06	CHECKED	W.M.M.
SCALE:	AS NOTED		
FILE:	2006-03-0.00		

STRUCTURAL GENERAL NOTES

SEAL

WILLIAM E. MUTZO PROFESSIONAL ENGINEER
FLORIDA REGISTRATION NO. 31892

ARCHITECT/CONSULTANT

MUTZO ENGINEERING, LLC
STRUCTURAL CONSULTANTS
870 NORTH ORLANDO AVE., SUITE 103A
MAITLAND, FLORIDA 32751
PHONE: (407) 644-1500
FAX: (407) 644-1582

SHEET NUMBER

S-0.00

STRUCTURAL STEEL

S-1 FABRICATION AND ERECTION IF STRUCTURAL STEEL SHALL COFORM TO THE AISC 'MANUAL OF STEEL CONSTRUCTION', NINTH EDIION AND THE AISC 'SPECIFICATION FOR STRUCTURAL STEEL BUILDINGS', 1989 EDITION.

S-2 ALL STRUCTURAL STEEL TO CONFORM TO ASTM A-572 WITH MIIMUM YIELD STRENGTH OF 50 KSI. MISCELLANEOUS STEEL SHALL ONFORM TO ASTM A-36 WITH A MINIMUM YIELD STRENGTH OF 36 KSI.

S-3 STRUCTURAL TUBES SHALL CONFORM TO ASTM A-441 WITH MINMUM YIELD STRNEGTH OF 46 KSI.

S-4 ALL HIGH-STRENGTH BOLTS SHALL MEET THE REQUIREMENTS O THE 'SPECIFICATION FOR STRUCTURAL JOINTS USING ASTM A325 IR A490 BOLTS'.

S-5 UNLESS NOTED OTHERWISE, ALL BOLTS SHALL BE 3/4' DIAMEER A325 AND SHALL BE BEARING TYPE CONNECTIONS.

S-6 ALL BOLTS CAST IN CONCRETE SHALL CONFORM TO ASTM A-36OR A-307.

S-7 ALL SHOP AND FIELD WELDING SHALL BE DONE BY CURRENTLY CERTIFIED WELDERS IN ACCORDANCE WITH AWS D1.1 'STRUCTIRAL WELDING CODE' LATEST EDITION.

S-8 USE E70XX ELECTRODES FOR ALL WELDING, UNLESS NOTED OTHERWISE. (GRIND SMOOTH ALL EXPOSED WELDS.)

S-9 SUBMIT STRUCTURAL STEEL SHOP DRAWINGS FOR REVIEW PRIR TO FABRICATION. CLEARLY SHOW ALL PIECE MARKS, CONNECTIONS, AND ERECTION DRAWINGS. ANY SPLICES NOT SHOWN ON CONTRACT DRAWINGS ARE TO BE CLEARLY NOTED FOR APPROVAL.

PRE-ENGINEERED WOOD TRUSSES

WT-1 DESIGN OF METAL CONNECTED ROOF TRUSSES TO COMPLY WITH

APPLICABLE BUILDING CODE (SEE NOTE D-1/SO.00)

NFPA'S 'NATIONAL DESIGN SPECIFICATION FOR STRESS GRADED LUMBER AND ITS FASTENINGS'.

TRUSS PLATE INSTITUTE'S 'DESIGN SPECIFICATION FOR LIGHT METAL PLATE CONNECTED FLOOR TRUSSES'.

WT-2 PRE-ENGINEERED PRE-FABRICATED WOOD TRUSSES AND THEIR CONNECTIONS TO EACH OTHER SHALL BE DESIGNED FOR THE UADS INDICATED IN NOTE WT-8 BY A PROFESSIONAL ENGINEER REGSTERED IN THE STATE OF FLORIDA.

WT-3 SIGNED AND SEALED SHOP DRAWINGS SHOWING TRUSS CONFIGUATION WITH MEMBER SIZES AND CONNECTIONS, TRUSS LAYOUT WITH PIECE MARKS, REQUIRED TRUSS TO TRUSS CONNECTIONS, DESIGN LODS, DURATION FACTORS AND ERECTION DETAILS MUST BE SUBMITTED FOR REVIEW PRIOR TO FABRICATION. IF REQ., SUBMIT COPIES TO THE BUILDING DEPARTMENT AT TIME OF PERMITTING.

WT-4 PRE-FABRICATED WOOD TRUSSES SHALL BE FABRICATED FROM SOUTHERN PINE(SPIB) KILN DRIED #2 OR BETTER FOR CHORDS AND #3 GRADE OR BETTER FOR WEBS.

WT-5 NO WANE, SKIPS OR OTHER DEFECTS SHALL OCCUR IN THE PLATE CONTACT AREA OR SCARFED AREA OF WEB MEMBERS. PLATES SHALL BE CONNECTED WITH ONE REQUIRED EACH SIDE OF TRUSS.

WT-6 NUMBER OF PANELS AND DIRECTION OF WEB MEMBERS TO SUIT CONTINUOUS OR SIMPLE SPAN TRUSS DESIGN REQUIREMENTS. SEE STRUCTURAL AND ARCHITECTURAL DRAWINGS FOR OUTLINE SHAPE AND ANY SPECIAL CONDITIONS/LOCATIONS OF PANEL POINTS.

WT-7 PERMANENT TRUSS BRACING OR BRIDGING MEMBERS SHALL BE 2x4 MINIMUM SOUTHERN PINE WITH MINIMUM LOCATIONS AS NOTED IN WT-10. ADDITIONAL BRACING REQUIRED TO STRENGTHEN TRUS COMPONENTS SHOULD BE NOTED ON THE ERECTION DRAWINGS IN ACCORDANCE WITH TRUSS MANUFACTURER'S RECOMMENDATIONS.

WT-8 TRUSS DESIGN LOADS AS FOLLOWS:

SLOPED TOP CHORD TRUSSES, (COORD. W/ARCH'L. : 12

TOP CHORD	DEAD LOAD	24 PSF
	LIVE LOAD	16 PSF
BOTTOM CHORD	DEAD LOAD	10 PSF
TOTAL LOAD-DURATION FACTOR		1.25

MECHANICAL UNITS-SEE PLANS FOR LOCATION AND UADS

FABRICATOR TO DESIGN TRUSSES AND SUPPLY ADDITONAL BRIDGING AS REQUIRED TO RESIST NET UPLIFT FORES AS SHOWN ON WIND PRESSURE DIAGRAM

PROVIDE DESIGN CALCULATIONS, SIGNED AND BEARIG THE EMBOSSED SEAL OF AN ENGINEER REGISTERED IN TH STATE OF FLORIDA, VERIFYING DESIGN FOR UPLIFT STRESES.

WT-9 HANDLING, ERECTION AND BRACING OF WOOD TRUSSES SHALL BE IN ACCORDANCE WITH 'HANDLING AND ERECTING WOOD TRUSSES'(HET-80) AND 'BRACING WOOD TRUSSES: COMMENTARY AND RECOMMENDATIONS' BY THE TRUSS PLATE INSTITUTE, LATEST EDITIONS.

WT-10 MINIMUM PERMANENT BRIDGING CRITERIA FOR PRE-ENGINEERED TRUSSES:

PROVIDE 2x4 CONTINUOUS HORIZONTAL BRIDGING AT TOP AND BOTTOM CHORDS AND INTERMITTENT CROSS BRIDGING AT 10' SPACING AT THE FOLLOWING MINIMUM LOCATIONS

A. AT RIDGES
B. AT 10'-10' O.C. HORIZONTALLY-AT PANEL POINT LOCATIONS;
C. AT ALL DEEP(>18") BEARING ENDS

PROVIDE CONTINUOUS 2x4 @ 48" O.C. PERPENDICULAR TO TRUSSES AT TOP CHORD WHERE ROOF PLYWOOD IS NOT RIGIDLY ATTACHED TO TOP CHORD OF TRUSS

PROVIDE CONTINUOUS 2x4 @ 48" O.C. AT BOTTOM CHORD WHERE A RIGID CEILING IS NOT FIRMLY ATTACHED TO THE BOTTOM CHORD. 2

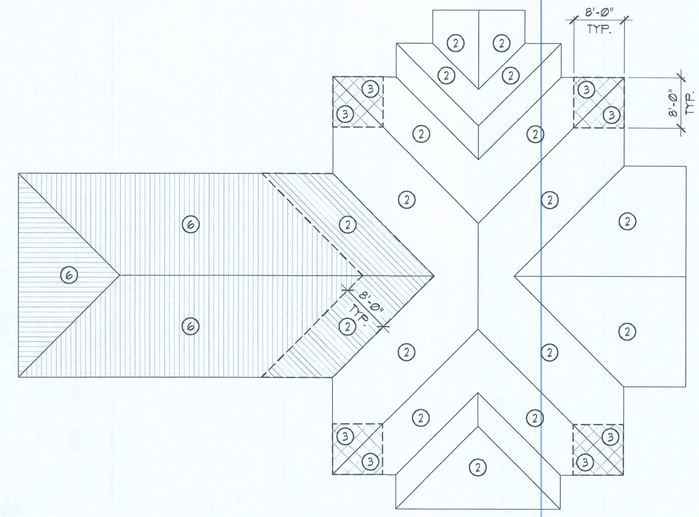

NET ROOF UPLIFT

TRIBUTARY AREA (ft^2)	INTERIOR ZONE 1 (psf)	EDGE ZONE 2 (psf)	CORNER ZONE 3 (psf)	CANOPY ZONE 6 (psf)
10	-20	-42.1	-42.1	-40.6
20	-19.4	-38.2	-38.2	-40.6
50	-18.6	-33	-33	-40.6
≥100	-18.1	-29.1	-29.1	-40.6

NET OVERHANG UPLIFT

TRIBUTARY AREA (ft^2)	EDGE ZONE 2 (psf)	CORNER ZONE 3 (psf)
10	-40.6	-68.3
20	-40.6	-60.5
50	-40.6	-50.2
≥100	-40.6	-42.4

1 ROOF WIND PRESSURE DIAGRAM

3/32" = 1'-0"

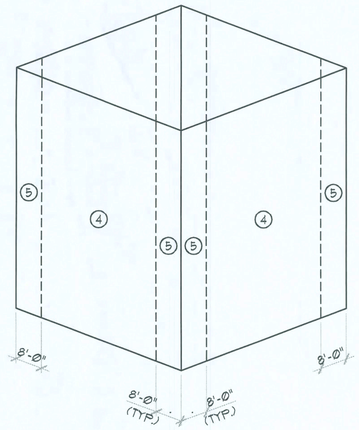

WALL PRESSURE (PSF) COMPONENTS AND CLADDING

TRIBUTARY AREA (ft^2)	INTERIOR ZONE 4 (psf)		CORNER ZONE 5 (psf)	
	POSITIVE	NEGATIVE	POSITIVE	NEGATIVE
10	22	-23.6	22	-29.1
20	21	-22.6	21	-27.2
50	20	-21.3	20	-24.6
>100	19	-20.4	19	-22.6

2 WALL PRESSURE / COMPONENTS AND CLADDING DIAGRAM

NOT TO SCALE

DESIGN SERVICES INCORPORATED
1778 N. PARK AVE., SUITE 100, MAITLAND, FL 32751,
TELEPHONE(407) 629-5755
LICENSE NO. FOOOO1
ARCHITECTURE INTERIOR DESIGN SPACE PLANNING

PEOPLES STATE BANK

WEST OFFICE
(NEW BRANCH BANK)
LAKE CITY, FLORIDA

GEIERAL NOTES

INTERIOR ELEVATION KEY

NORTH
ACTUAL
PLAN

MARK	DATE	REVISIONS

COMM. NO.	0600330	DRAWN	S.L.
DATE:	02/15/06	CHECKED	W.M.M.
SCALE:	AS NOTED		
FILE:	2006075-0.01		

STRUCTURAL GENERAL NOTES

SEAL

6/6/06

WILLIAM M. MITZO PROFESSIONAL ENGINEER
FLORIDA REGISTRATION NO. 21692

ARCHITECT/CONSULTANT
MITZO ENGINEERING, LLC
STRUCTURAL CONSULTANTS
870 NORTH ORLANDO AVE., SUITE 103A
MAITLAND, FLORIDA 32751
PHONE: (407) 644-1500
FAX: (407) 644-1583

SHEET NUMBER

S-0.01

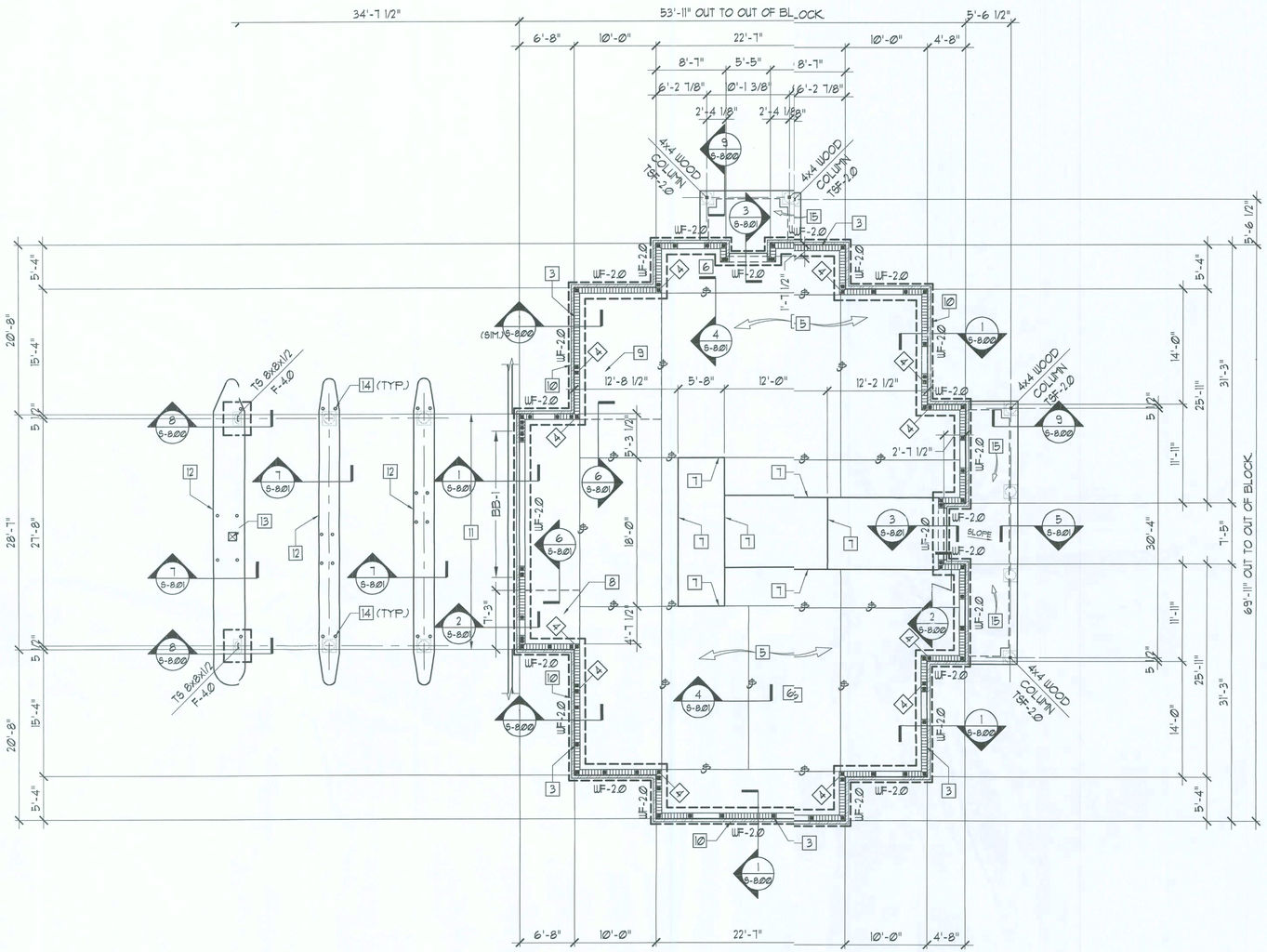

FOUNDATION AND SLAB ON GRADE PLAN

1/8"=1'-0"

0'-0" (REF.)
T/SLAB (TYP. U.N.O.)
-1'-4" (REF.)
T/FTG (TYP., U.N.O.)

1. STEP FOOTINGS (AS REQUIRED) SEE DETAIL 7/S-8.00 FOR ADDITIONAL INFORMATION. GENERAL CONTRACTOR TO COORDINATE STEP FOOTING LOCATIONS.
2. PROVIDE CORNER BARS WHERE ALL FOOTINGS CHANGE DIRECTION AND AT FOOTING INTERSECTIONS. SEE SECTION 6/S-8.00 FOR FURTHER INFORMATION.
3. INDICATES 8" MASONRY BEARING WALLS REINFORCED W/(1)-#5 (VERT.) BAR AND MATCHING DOWEL AT FOOTING, IN SOLID GROUT FILLED CELLS AT ALL CORNERS, INTERSECTIONS, AND ADJACENT MASONRY OPENINGS (COORD. SIZE, LOCATIONS AND ELEVATIONS THERE OF WITH ARCH'L. DRAWINGS), ENDS OF WALLS AND BETWEEN AT 48" O.C. (MAX.) SEE PLAN FOR ADDITIONAL LOCATIONS. EXTEND VERTICAL REINF'G. BARS THRU TO UPPER MOST MASONRY BOND BEAM (SPLICE / LAP AS REQUIRED) - SEE SHEET S-3.00) AND TERMINATE BARS WITH STANDARD 90° HOOK. (SEE SEC. 2/S-8.02 FOR FURTHER INFORMATION)
4. PROVIDE DOUBLE FILLED CELLS REINFORCED WITH (1)-#5 (VERT.) BAR AND MATCHING DOWEL AT FOOTING, IN SOLID GROUT FILLED CELLS, (TYP. EACH CELL) LOCATE SUCH THAT DOUBLE FILLED CELLS ALIGN WITH PRE-ENGINEERED WOOD GIRDER TRUSS ABOVE, (SEE SHEET S-3.00 AND COORDINATE EXACT LOCATIONS WITH PRE-ENGINEERED WOOD TRUSS MANUFACTURER / SUPPLIER'S APPROVED SHOP DRAWINGS)
5. SLAB ON GRADE CONSTRUCTION: 4" POLYPROPYLENE FIBER REINFORCED CONCRETE SLAB ON GRADE ON VAPOR BARRIER (SEE ARCH'L. DRAWINGS) OVER COMPACTED SUBGRADE. COORD. ANY AND ALL SLAB SLOPES, DEPRESSIONS AND LIMITS THERE OF WITH ARCH'L. DRAWINGS. (FOR ACTUAL TOP OF SLAB ELEVATIONS SEE ARCH'L. AND / OR CIVIL DRAWINGS)
6. SLAB CONTROL JOINTS (SEE PLAN FOR SPACING) AND CONTROL JOINT DETAIL 4/S-8.01 FOR FURTHER INFORMATION AND COORD. W/ARCH'L. DRAWINGS FOR ADDITIONAL LOCATIONS.
7. PROVIDE 1/4" (DEEP) SLAB CUT / JOINTS.
8. 8" CONCRETE SLAB (SEE SEC. 6/S-8.01 FOR REINFORCING) UNDER "ATM" MACHINE. GENERAL CONTRACTOR TO COORDINATE EXTENT / LIMITS THERE OF WITH ARCH'L. DRAWINGS.
9. 8" CONCRETE SLAB (SEE SEC. 6/S-8.01 FOR REINFORCING) UNDER "SAFE KEEPING ROOM". GENERAL CONTRACTOR TO COORDINATE EXTENT / LIMITS THERE OF WITH ARCH'L. DRAWINGS.
10. EXTERIOR VENEER: COORDINATE LIMITS / EXTENTS WITH ARCH'L. DRAWINGS.
11. PROVIDE 12"(WIDE)X1'-4"(DEEP - MIN.) CONCRETE CURB. SEE SEC. 1/S-8.01 FOR FURTHER INFORMATION. COORD. EXTENT / LIMITS OF CURB WITH ARCH'L. AND / OR CIVIL DRAWINGS.
12. GENERAL CONTRACTOR TO COORDINATE EXTENT / LIMITS OF DRIVE THRU ISLANDS WITH ARCH'L. AND / OR CIVIL DRAWINGS.
13. CUTOUT FOR CONDUIT IN DRIVE THRU ISLAND, COORDINATE EXACT SIZE AND LOCATION WITH ARCH'L. DRAWINGS.
14. BOLLARD: SEE ARCH'L. DRAWINGS FOR TYPICAL INFORMATION AND LOCATION. (TYP.)
15. EXTERIOR SLAB ON GRADE: 4" POLYPROPYLENE FIBER REINFORCED CONCRETE SLAB ON GRADE ON VAPOR BARRIER (SEE ARCH'L. DRAWINGS) OVER COMPACTED SUBGRADE. COORD. LIMITS / EXTENTS THERE OF, AND TOP OF SLAB SLOPES WITH ARCH'L. DRAWINGS. (FOR ACTUAL TOP OF SLAB ELEVATIONS SEE ARCH'L. AND / OR CIVIL DRAWINGS)

FOOTING SCHEDULE

MARK	SIZE WIDTH x LENGTH x DEPTH	REINFORCEMENT BOTTOM	REINFORCEMENT TOP
F-4.0	4'-0"x4'-0"x12"	(5)-#5's EACH WAY	-
TSF-2.0	2'-0"x2'-0"x12"	(3)-#5's EACH WAY	-
WF-2.0	2'-0"xCONT.x12"	(3)-#5's CONT. #5's @ 24"O.C. TRAVERSE	-

DESIGN SERVICES INCORPORATED
1778 N. PARK AVE., SUITE 100, MAITLAND, FL 32751,
TELEPHONE(407) 629-5755
LICENSE NO. F00061
ARCHITECTURE INTERIOR DESIGN SPACE PLANNING

WEST OFFICE
(NEW BRANCH BANK)
LAKE CITY, FLORIDA

PEOPLES STATE BANK

GENERAL NOTES

INTERIOR ELEVATION KEY

NORTH
ACTUAL
PLAN

MARK	DATE	REVISIONS

COMM. NO.	06003.00	DRAWN:	S.L.
DATE:	02/15/06	CHECKED:	W.M.M.
SCALE:	AS NOTED		
FILE:	100607BUI		

FOUNDATION AND SLAB ON GRADE PLAN

SEAL

WILLIAM M. MITZO PROFESSIONAL ENGINEER
FLORIDA REGISTRATION NUMBER: 21691

ARCHITECT/CONSULTANT

MITZO ENGINEERING, LLC
STRUCTURAL CONSULTANTS
870 NORTH ORLANDO AVE., SUITE 103A
MAITLAND, FLORIDA 32751
PHONE: (407) 644-1500
FAX: (407) 644-1562

SHEET NUMBER

S-1.11

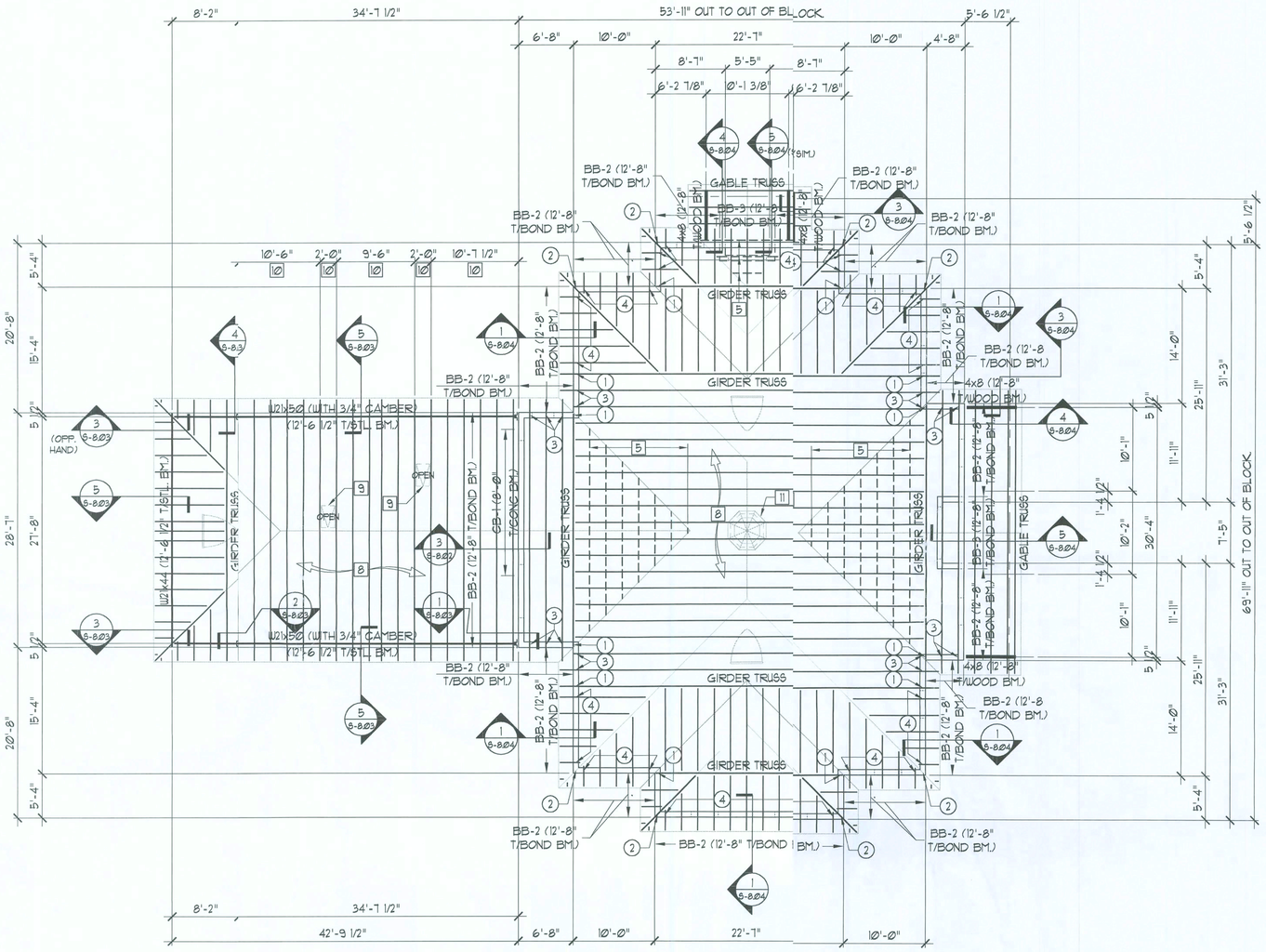

ROOF FRAMING PLAN

1/8"=1'-0"

1. PROVIDE MASONRY LINTEL OVER ALL OPENINGS IN MASONRY WALLS (COORDINATE EXACT SIZE, LOCATIONS AND ELEVATIONS WITH ARCH'L. DRAWINGS) SEE GENERAL NOTES FOR LINTEL TYPE SIZES AND REINFORCING. PROVIDE TEMPORARY SHORING DURING CONSTRUCTION IF LINTEL SPAN IS GREATER THAN 6'-0" (SIX FEET)
2. PROVIDE CORNER BARS WHERE ALL BOND BEAMS (BB-) CHANGE DIRECTION AND AT ALL BOND BEAM (BB-) INTERSECTIONS. SEE SEC. 6/S-8.00 (SIM.) FOR FURTHER INFORMATION.
3. ALL PRE-ENGINEERED WOOD TRUSSES AND MISCELLANEOUS 2x FRAMING SPACED AT 24"O.C. (MAX.) COORD. EXACT LOCATIONS WITH PRE-ENGINEERED WOOD MANUFACTURER / SUPPLIER'S APPROVED SHOP DRAWINGS.
4. PROVIDE 2x (TALL) WOOD BLOCKING BETWEEN EACH TRUSS WHERE PLYWOOD ROOF SHEATHING CHANGES DIRECTION (RIDGE LINES, ROOF EDGE, HIPS AND VALLIES, ETC.)
5. OVER BUILT FRAMING: PRE-ENGINEERED WOOD TRUSSES OR 2x FRAMING SPACED AT 24"O.C. (MAX.) COORD. EXACT LOCATIONS WITH PRE-ENGINEERED WOOD MANUFACTURER / SUPPLIER'S APPROVED SHOP DRAWINGS.
6. SEE GENERAL NOTES: (SHT. S-0.01) FOR CONNECTION INFORMATION OF PRE-ENGINEERED WOOD TRUSSES, GIRDER TRUSSES AND MISCELLANEOUS 2x FRAMING, ETC.
7. PROVIDE HEAVY GIRDER TIEDOWN: HGT-2 (FOR 2 PLY) - (IF ONE PLY - PROVIDE 3/4" (WOOD) SHIM ON EACH SIDE) OR HGT-3 (FOR 3 PLY) WITH ANCHOR BOLTS AS RECOMMENDED BY SIMPSON COMP. AT EACH PRE-ENGINEERED WOOD GIRDER TRUSS (OR AN APPROVED EQUAL SUBSTITUTE) COORDINATE SIZE (NUMBER OF PLY'S) WITH PRE-ENGINEERED WOOD TRUSS MANUFACTURER / SUPPLIER'S APPROVED SHOP DRAWINGS.
8. ROOF CONSTRUCTION: (ROOFING FINISH - SEE ARCH'L. DRAWINGS) OVER 5/8" CDX EXTERIOR GRADE PLYWOOD SHEATHING NAILED WITH 10d NAILS AT 6"O.C. (MAX.) AT SUPPORTED EDGES, AND 10d NAILS AT 12"O.C. (MAX.) AT INTEREDIATE SUPPORTS (FIELD). PROVIDE ONE PLYWOOD CLIP PER SPAN BETWEEN SHEET EDGES. ON PRE-ENGINEERED WOOD TRUSSES.
9. ACCESS HATCH. COORDINATE EXACT SIZE AND LOCATION WITH ARCH'L. DRAWINGS.
10. HOLD TRUSS LOCATION DIMENSIONS (AS SHOWN) FOR LOCATION OF ACCESS HATCH.
11. "COPULA" SEE ARCH'L. DRAWINGS FOR SIZE AND LOCATION. (SEE SEC. 6/S-8.03 FOR ANCHOR / ATTACHMENT INFORMATION)

FRAMING ANCHOR SCHEDULE (AT MASONRY ONLY)

MARK:	TRUSS TYPES:	HANGER TYPE: TOP	HANGER TYPE: BOTTOM	MANUF.	DESCRIPTION	REMARKS
1	GIRDER TRUSSES	-	HGT-2	SIMPSON	HEAVY GIRDER TIE DOWN	SEE NOTE 7
2	HIP TRUSSES	-	HETA20	SIMPSON	EMBEDDED TRUSS ANCHOR	
3	FULL TRUSSES	-	HETA20	SIMPSON	EMBEDDED TRUSS ANCHOR	
4	JACK TRUSSES	-	HETA20	SIMPSON	EMBEDDED TRUSS ANCHOR	

NOTE:
1. SEE SECTIONS FOR ADDITIONAL CONNECTOR CALLOUTS AND COORDINATE / VERIFY WITH APPROVED SHOP DRAWINGS.
2. ALL "SIMPSON COMPANY" HANGERS, ETC. (OR APPROVED EQUAL) SHALL BE USED / INSTALLED AS RECOMMENDED BY THE MANUFACTURE'S REQUIREMENTS.

DESIGN SERVICES INCORPORATED
1778 N. PARK AVE., SUITE 100, MAITLAND, FL 32751,
TELEPHONE(407) 629-5755
LICENSE NO. F00061
ARCHITECTURE INTERIOR DESIGN SPACE PLANNING

GENERAL NOTES

WEST OFFICE
(NEW BRANCH BANK)
LAKE CITY, FLORIDA

PEOPLES STATE BANK

INTERIOR ELEVATION KEY

NORTH
ACTUAL
PLAN

MARK	DATE	REVISIONS

COMM. NO.	06003.00	DRAWN:	S.L.
DATE:	02/15/06	CHECKED:	V.M.M.
SCALE:	AS NOTED		
FILE:	2006015-S00		

ROOF FRAMING PLAN

SEAL

WILLIAM E. MITZO PROFESSIONAL ENGINEER
FLORIDA REGISTRATION NUMBER: 21169

ARCHITECT/CONSULTANT
MITZO ENGINEERING, LLC
STRUCTURAL CONSULTANTS
870 NORTH ORLANDO AVE., SUITE 103A
MAITLAND, FLORIDA 32751
PHONE: (407) 644-1500
FAX: (407) 644-1582

SHEET NUMBER

S-3.00

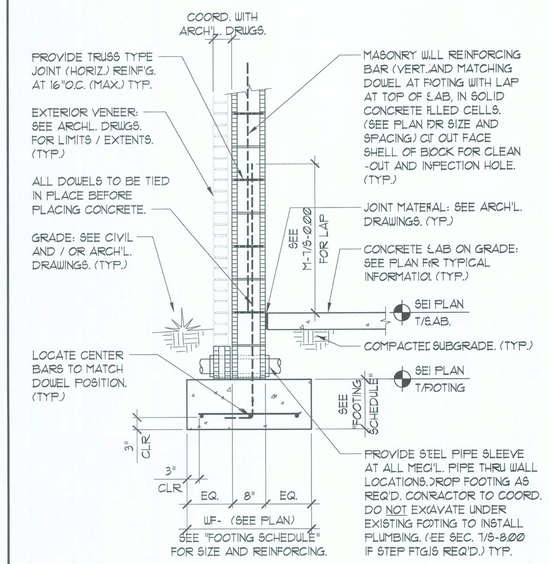

1 EXTER. BLOCK ON WALL FOOTING

3/4" = 1'-0"

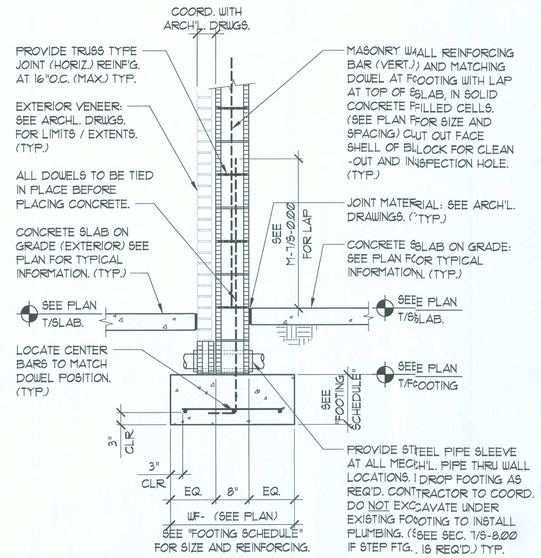

2 INTERIOR BLOCK ON FOOTING

3/4" = 1'-0"

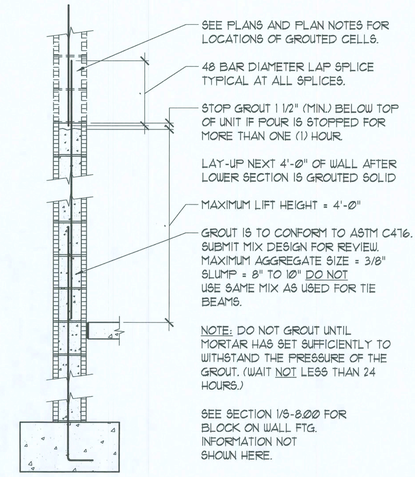

CONTRACTOR'S OPTION

3 LOW LIFT GROUTING

3/4" = 1'-0"

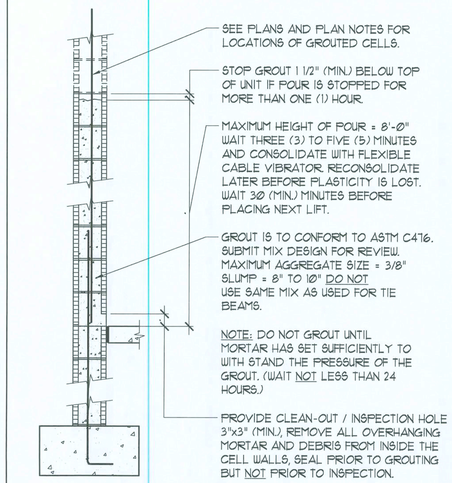

CONTRACTOR'S OPTION

4 HIGH LIFT GROUTING

3/4" = 1'-0"

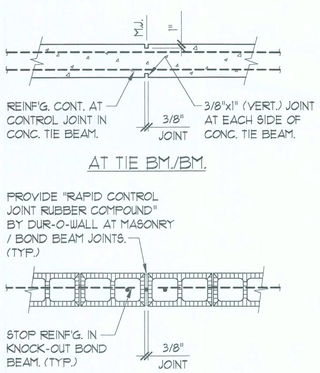

SPACING FOR CONTROL JOINT
3 x HEIGHT = SPACING IN FEET (NOT TO EXCEED 30'-0")

5 MASONRY JOINTS

3/4" = 1'-0"

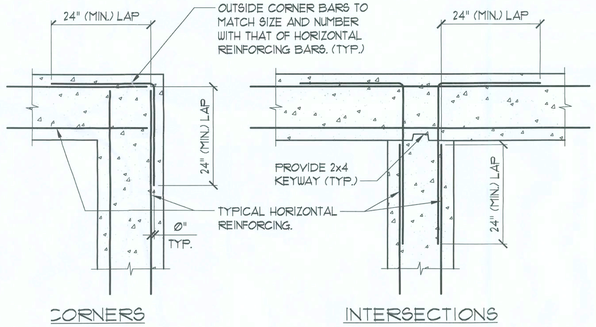

6 HORIZ. AT REINF'G. BMS., WALLS AND FTGS.

1/4" = 1'-0"

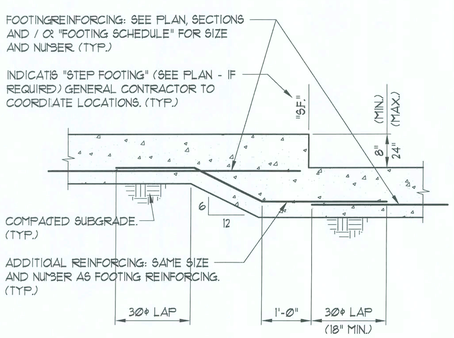

7 STEP FOOTING DETAIL

1/4" = 1'-0"

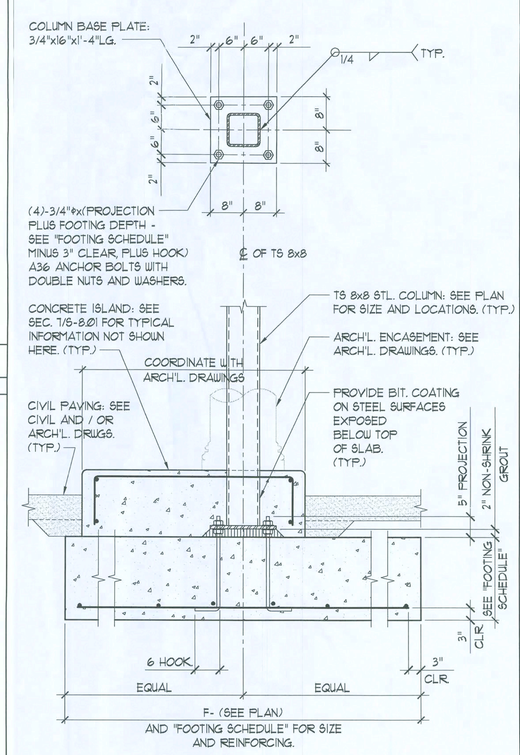

8 STEEL COLUMN AT FOOTING

3/4" = 1'-0"

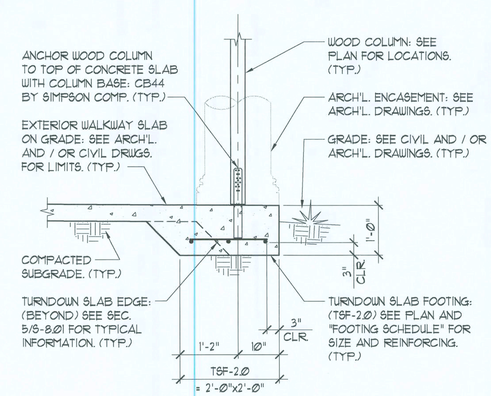

9 WOOD COLUMN AT SLAB FOOTING

3/4" = 1'-0"

DESIGN SERVICES INCORPORATED
1778 N. PARK AVE., SUITE 100, MAITLAND, FL 32751,
TELEPHONE(407) 629-5755
LICENSE NO. F00061
ARCHITECT·LAND SURVEYOR·INTERIOR DESIGNER·SOCIAL CONSULTANT

GENERAL NOTES

PEOPLES STATE BANK

WEST OFFICE
(NEW BRANCH BANK)
LAKE CITY, FLORIDA

INTERIOR ELEVATION KEY

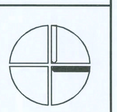

NORTH
ACTUAL
PLAN

MARK	DATE	REVISIONS

CONM. NO.:	06003.00	DRAWN:	S.L.
DATE:	02/15/06	CHECKED:	V.M.M.
SCALE:	AS NOTED		
FILE:	200603.000		

SECTIONS AND DETAILS

SEAL

6/6/06

WILLIAM M. MITZO PROFESSIONAL ENGINEER
FLORIDA REGISTRATION NUMBER: 11692

ARCHITECT/CONSULTANT
MITZO ENGINEERING, LLC
STRUCTURAL CONSULTANTS
670 NORTH ORLANDO AVE., SUITE 103A
MAITLAND, FLORIDA 32751
PHONE: (407) 644-1500
FAX: (407) 644-1582

SHEET NUMBER

S-8.00

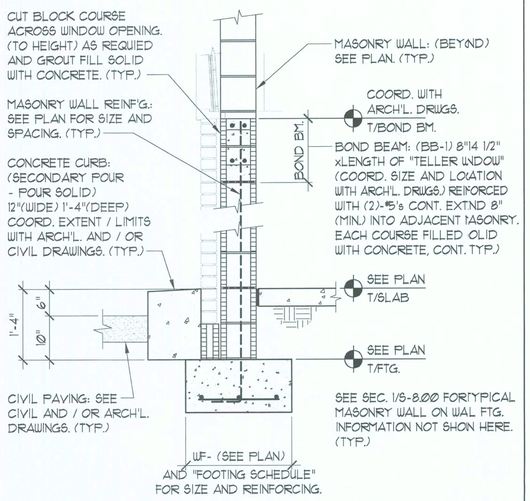

1 CONCRETE CURB AT WALL

3/4" = 1'-0"

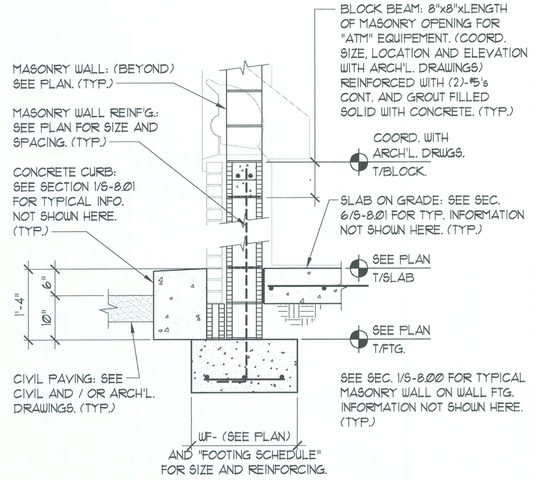

2 CONCRETE CURB AT WALL

3/4" = 1'-0"

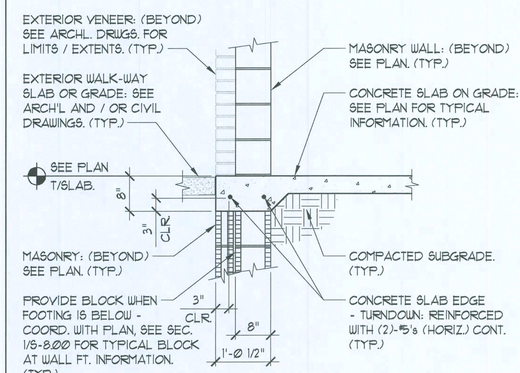

3 THICKENED SLAB EDGE DETAIL

3/4" = 1'-0"

NOTE:

1. CONSTRUCTION JOINTS MAYBE USED IN LIEU OF CONTROL JOINTS.
2. JOINT PLACEMENT REQUIREMENTS:
   FOR ENCLOSED / INTERIOR AREAS. 20'-0" O.C. (MAX.) EACH WAY
   FOR OUTSIDE / EXTERIOR AREAS. 12'-0" O.C. (MAX.) EACH WAY
   WHERE TOP OF SLAB SURFACES ARE TO BE FINISHED WITH TILE - GENERAL CONTRACTOR IS TO COORDINATE JOINT LOCATIONS WITH THAT OF TILE MORTAR JOINTS.

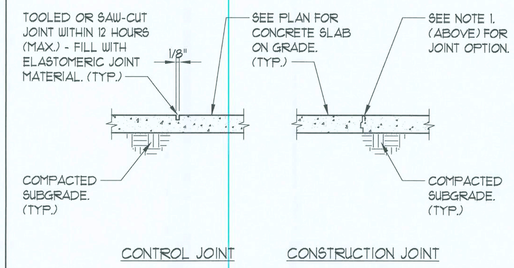

4 SLAB CONSTR / CONTROL JOINTS

3/4" = 1'-0"

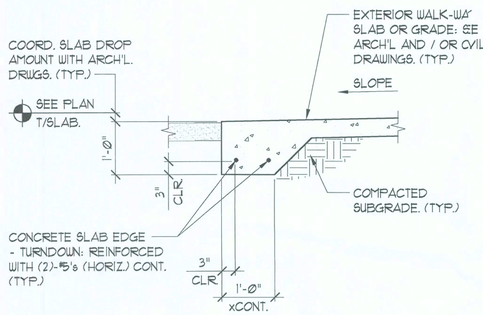

5 TURNDOWN SLAB EDGE DETAIL

3/4" = 1'-0"

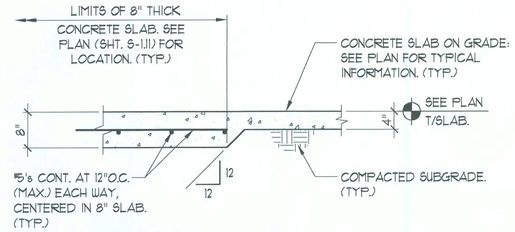

6 THICKENED SLAB DETAIL

3/4" = 1'-0"

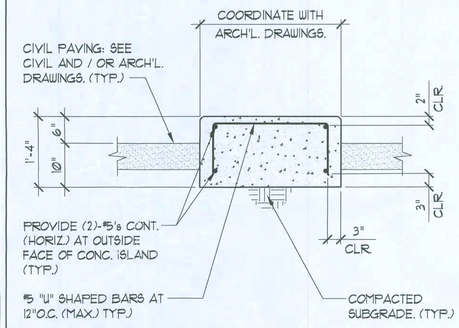

7 CONCRETE "DRIVE THRU" ISLAND

3/4" = 1'-0"

DESIGN SERVICES INCORPORATED
1778 N. PARK AVE., SUITE 100, MAITLAND, FL 32751,
TELEPHONE(407) 629-5755
LICENSE NO. F00061
ARCHITECTURE INTERIOR DESIGN SPACE PLANNING

WEST OFFICE
(NEW BRANCH BANK)
LAKE CITY, FLORIDA

PEOPLES STATE BANK

GENERAL NOTE:

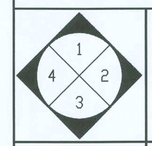

INTERIOR ELEVATION KEY

NORTH
ACTUAL
PLAN

MARK	DATE	REVISIONS

COMM. NO.:	06003.00	DRAWN:	S.L.
DATE:	02/15/06	CHECKED:	W.M.M.
SCALE:	AS NOTED		
FILE:	20060756.01		

SECTIONS AND DETAILS

SEAL

WILLIAM M. MITZO PROFESSIONAL ENGINEER
FLORIDA REGISTRATION NUMBER: 21692

ARCHITECT/CONSULTANT
MITZO ENGINEERING, LLC
STRUCTURAL CONSULTANTS
170 NORTH ORLANDO AVE., SUITE 103A
MAITLAND, FLORIDA 32751
PHONE: (407) 644-1500
FAX: (407) 644-1562

SHEET NUMBER

S-8.01

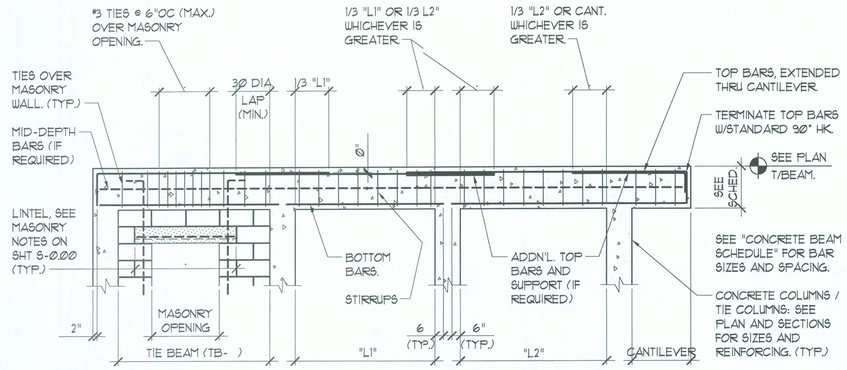

CONCRETE BEAM DIAGRAM

NOT TO SCALE

CONCRETE BEAM SCHEDULE							
MARK	SIZES (W x D)	REINFORCING			STIRRUPS		REMARKS
		BOT. BARS	TOP BARS	MID BAR	SIZE	SPACING	
CB-1	8"x21	(2)-#5's	(2)-#5's		#3's	@ 8" O.C.	SEE SEC. 3/S-8.02
-	-	-	-	-	-	-	
-	-	-	-	-	-	-	
-	-	-	-	-	-	-	
-	-	-	-	-	-	-	

NOTE:

1. ALL CONCRETE BEAMS: (CB-) TO HAVE A MINIMUM OF 8" END BEARING ONTO MASONRY WALLS, TYPICAL AT EACH END.

1 CONCRETE BEAM SCHEDULE

3/4" = 1'-0"

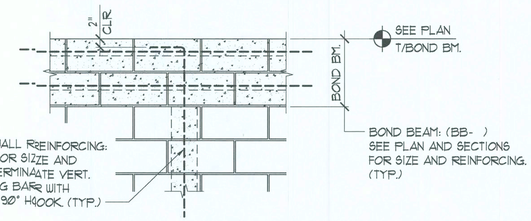

2 TERMINATION OF FILLED CELL (VERT.) BARS

3/4" = 1'-0"

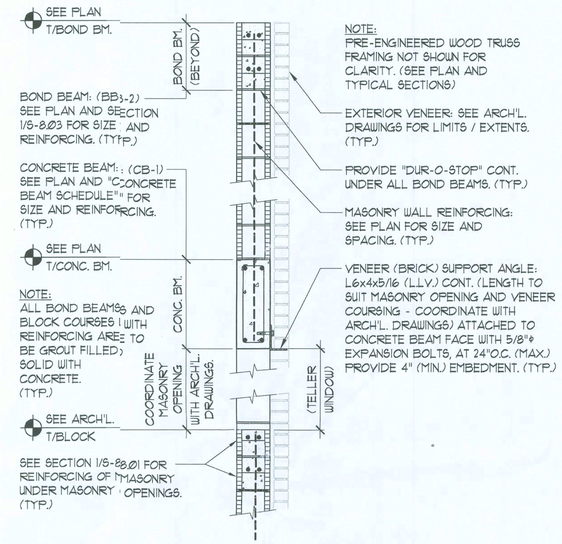

3 MASONRY OPENING DETAIL

3/4" = 1'-0"

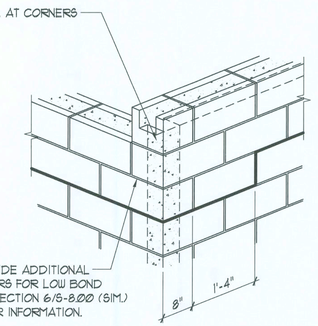

CORNER VIEW

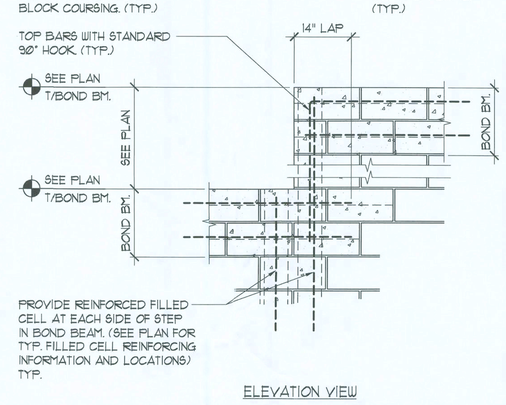

ELEVATION VIEW

4 STEPPED BOND BEAM DETAIL

3/4" = 1'-0"

DESIGN SERVICES INCORPORATED
1778 N. PARK AVE., SUITE 100, MAITLAND, FL 32751,
TELEPHONE(407) 629-5755
LICENSE NO. F00061
ARCHITECTURE INTERIOR DESIGN SPACE PLANNING

GENERAL NOTES

WEST OFFICE
(NEW BRANCH BANK)
LAKE CITY, FLORIDA

PEOPLES STATE BANK

1 2 3 4

INTERIOR ELEVATION KEY

NORTH
ACTUAL
PLAN

MARK	DATE	REVISIONS

COMM. NO.:	06003.00	DRAWN:	S.L.
DATE:	02/15/06	CHECKED:	W.M.M.
SCALE:	AS NOTED		
FILE:	2006075602		

SECTIONS AND DETAILS

SEAL

6/6/06

WILLIAM M. MITZO PROFESSIONAL ENGINEER
FLORIDA REGISTRATION NUMBER: 21892

ARCHITECT/CONSULTANT

MITZO ENGINEERING, LLC
STRUCTURAL CONSULTANTS
870 NORTH ORLANDO AVE., SUITE 103A
MAITLAND, FLORIDA 32751
PHONE: (407) 644-1500
FAX: (407) 644-1582

SHEET NUMBER

S-8.02

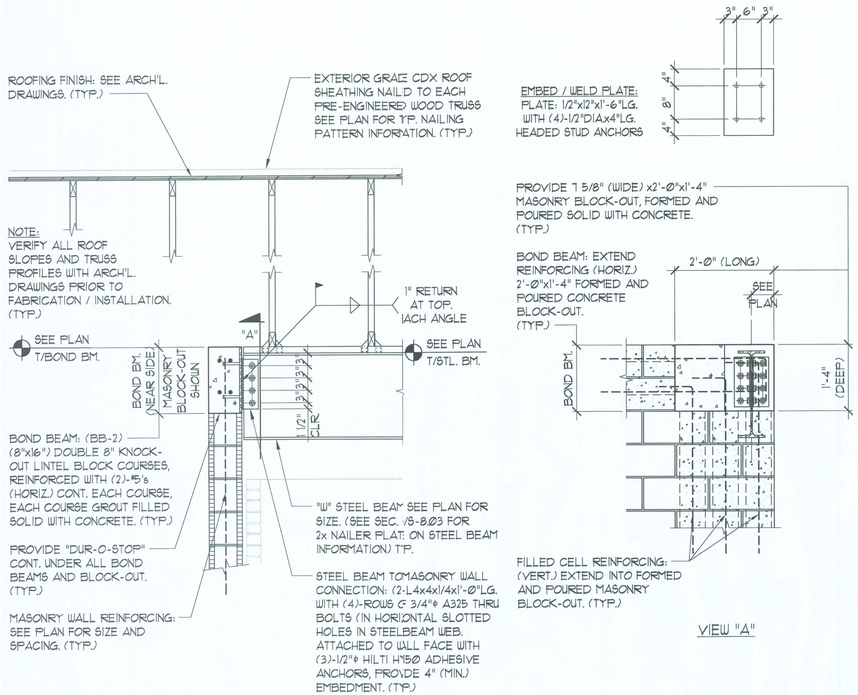

1 STEEL BEAM TO MASONRY WALL CONN.
3/4" = 1'-0"

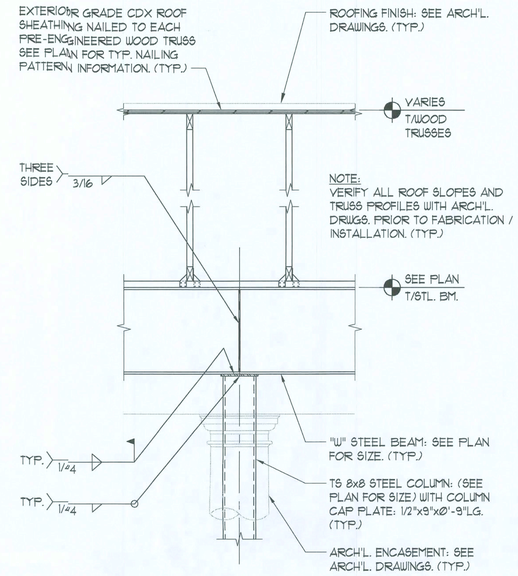

2 STEEL BEAM ON STEEL COL. CONN.
3/4" = 1'-0"

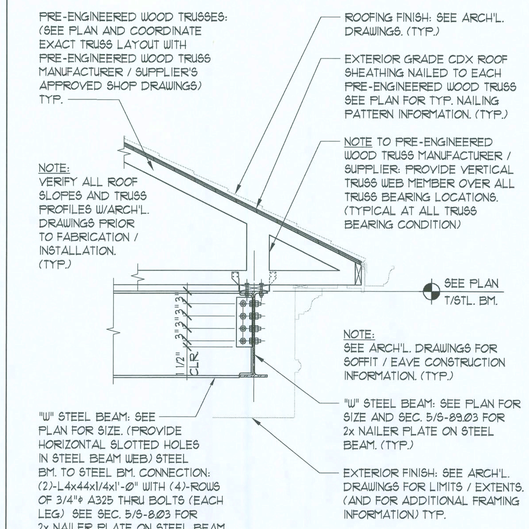

3 STEEL BEAM TO STEEL BEAM CONN.
3/4" = 1'-0"

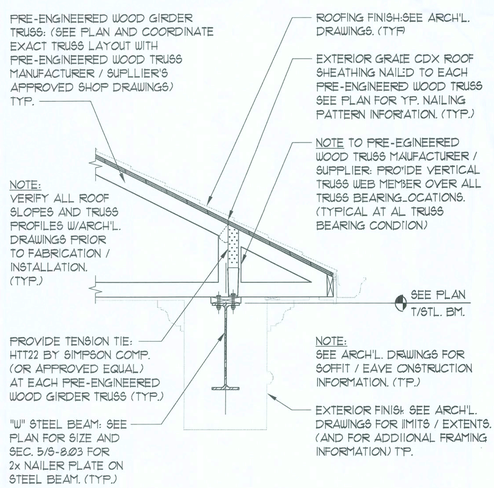

4 GIRDER TRUSS TO STEEL BEAM
3/4" = 1'-0"

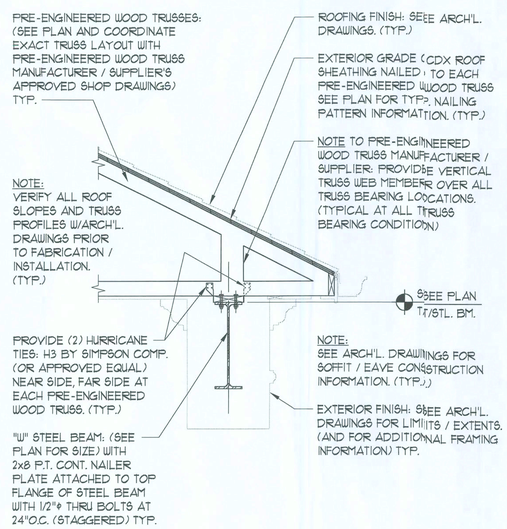

5 TRUSS TO STEEL BEAM
3/4" = 1'-0"

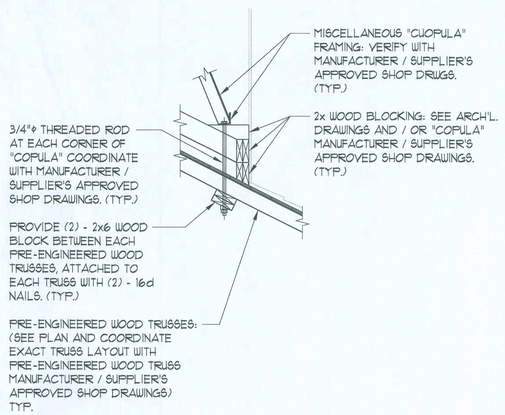

6 "COPULA" ANCHORING DETAIL
3/4" = 1'-0"

DESIGN SERVICES INCORPORATED
1778 N. PARK AVE., SUITE 100, MAITLAND, FL 32751,
TELEPHONE(407) 629-5755
LICENSE NO. F00061
ARCHITECTURE INTERIOR DESIGN CIVIL/ STRUCTURAL

GENERAL NOTES

WEST OFFICE
(NEW BRANCH BANK)
LAKE CITY, FLORIDA

PEOPLES STATE BANK

1 2 3 4
INTERIOR ELEVATION KEY

NORTH
ACTUAL
PLAN

MARK	DATE	REVISIONS

COMM. NO.	06003.00	DRAWN	S.L.
DATE:	02/15/06	CHECKED	W.M.
SCALE:	AS NOTED		
FILE:	06003.03		

SECTIONS AND DETAILS

SEAL

6/6/06
WILLIAM M. MITZO PROFESSIONAL ENGINEER
FLORIDA REGISTRATION NUMBER: 21692

ARCHITECT/CONSULTANT
MITZO ENGINEERING, LLC
STRUCTURAL CONSULTANTS
870 NORTH ORLANDO AVE., SUITE 103A
MAITLAND, FLORIDA 32751
PHONE: (407) 644-1500
FAX: (407) 644-1582

SHEET NUMBER
S-8.03

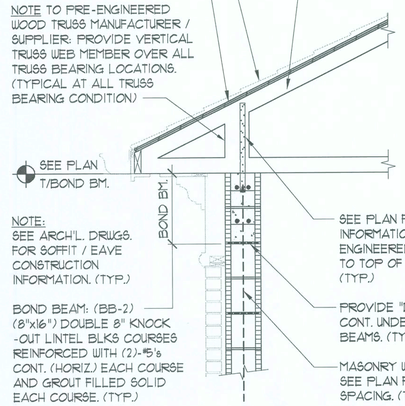

1 TRUSS ON MASONRY WALL

3/4" = 1'-0"

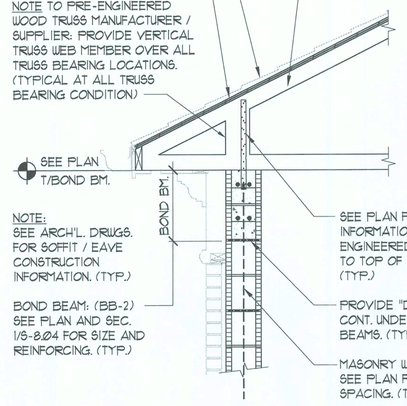

2 GIRDER TRUSS ON MASONRY WALL

3/4" = 1'-0"

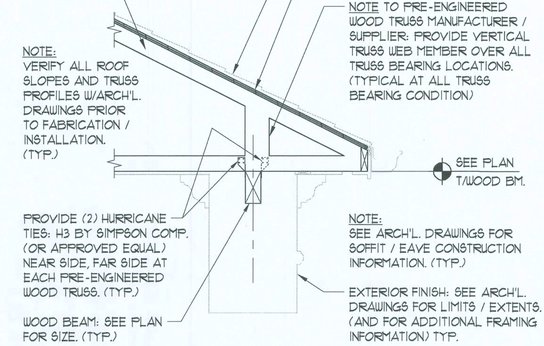

3 TRUSS ON WOOD BEAM

3/4" = 1'-0"

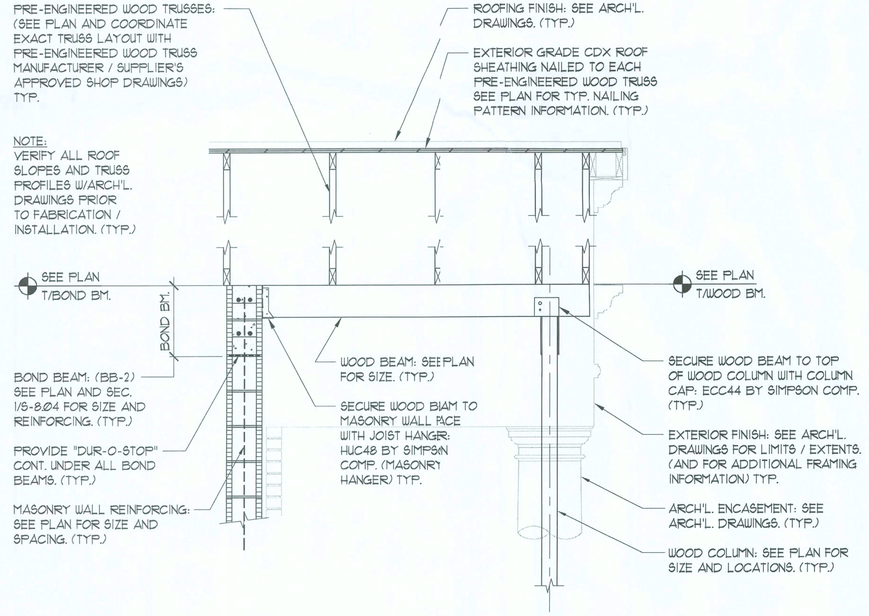

4 WOOD BEAM TO MASONRY WALL

3/4" = 1'-0"

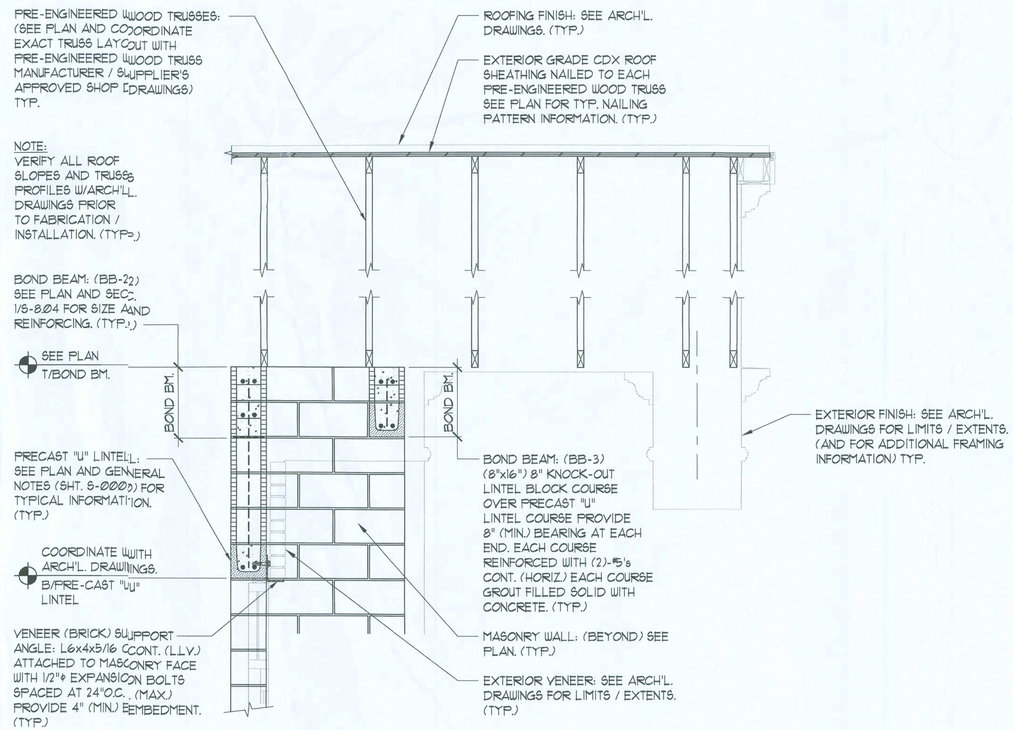

5 SECTION

3/4" = 1'-0"

DESIGN SERVICES INCORPORATED
1778 N. PARK AVE., SUITE 100, MAITLAND, FL 32751,
TELEPHONE(407) 629-5755
LICENSE NO. F00061
ARCHITECTURE INTERIOR DESIGN SPACE PLANNING

PEOPLES STATE BANK

WEST OFFICE
(NEW BRANCH BANK)
LAKE CITY, FLORIDA

GENERAL NOTES

INTERIOR ELEVATION KEY

NORTH
ACTUAL
PLAN

MARK	DATE	REVISIONS

COMM. NO.	06003.00	DRAWN:	S.L.
DATE:	02/15/06	CHECKED:	W.M.M.
SCALE:	AS NOTED		
FILE:	20060456.04		

SECTIONS AND DETAILS

SEAL

WILLIAM M. MITZO PROFESSIONAL ENGINEER
FLORIDA REGISTRATION NUMBER: 21162

ARCHITECT/CONSULTANT
MITZO ENGINEERING, LLC
STRUCTURAL CONSULTANTS
870 NORTH ORLANDO AVE., SUITE 103A
MAITLAND, FLORIDA 32751
PHONE: (407) 644-1300
FAX: (407) 644-1855

SHEET NUMBER

S-8.04

PLUMBING SYMBOLS LEGEND

———	SOIL PIPE OR WASTE PIPE
- - - - -	VENT PIPING
—— - ——	COLD WATER PIPING
—— · - ——	HOT WATER PIPING
WCO	WALL CLEANOUT
CO	CLEANOUT
VTR	VENT THROUGH ROOF

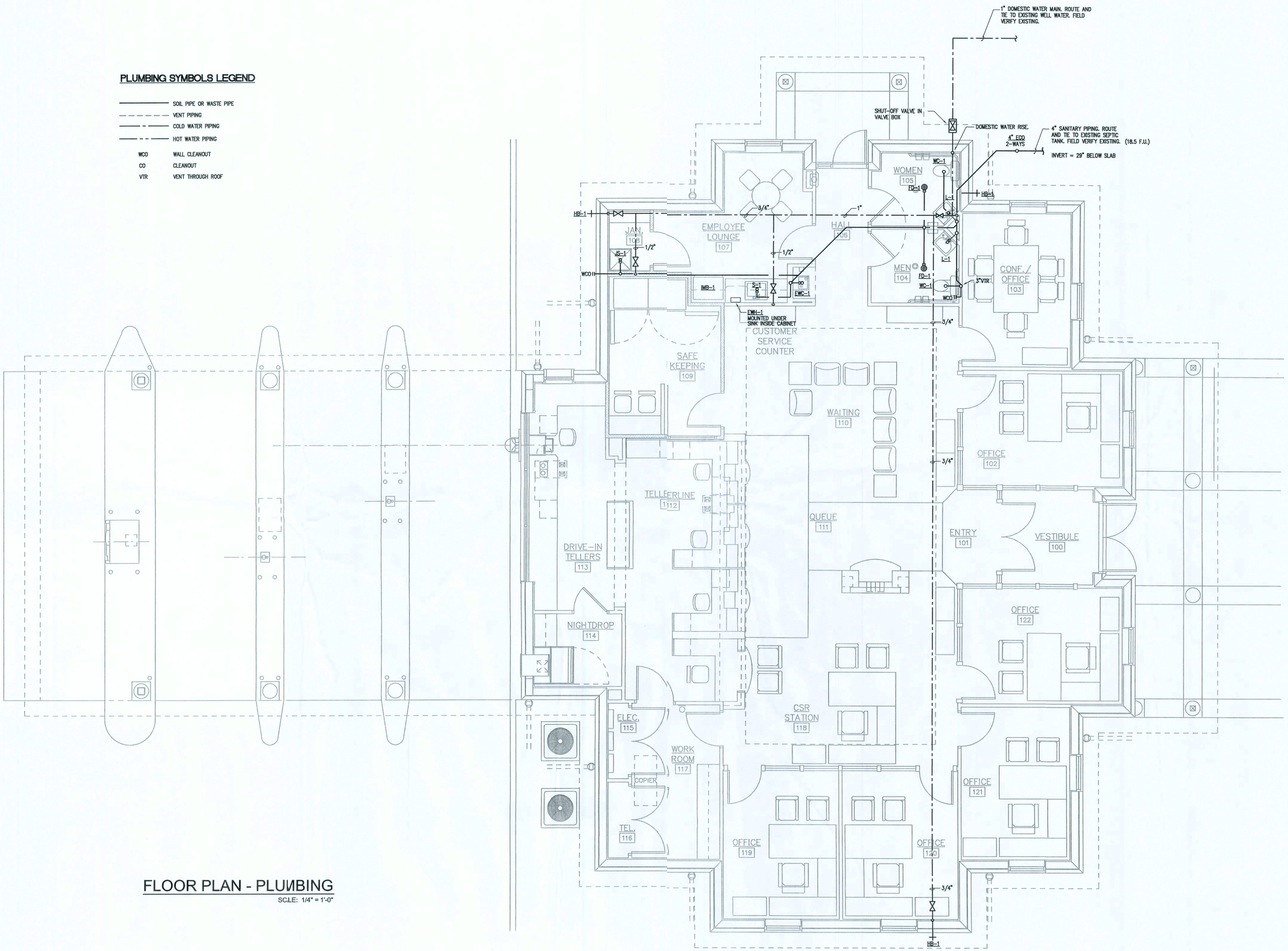

FLOOR PLAN - PLUMBING

SCLE: 1/4" = 1'-0"

DESIGN SERVICES INCORPORATED

1778 N. PARK AVENUE, SUITE 100, MAITLAND, FL 32751,
TELEPHONE(407) 629-5755

ARCHITECTURE
INTERIOR DESIGN
SPACE PLANNING

LICENSE NO. F00061

WEST OFFICE
(NEW BRANCH BANK)
LAKE CITY, FLORIDA

EOPLES STATE BANK

GENERAL NOTES

THE DESIGN, DRAWINGS, AND SPECIFICATIONS INCORPORATED HEREIN AS AN INSTRUMENT OF PROFESSIONAL SERVICES ARE, AND SHALL BE THE SOLE PROPERTY OF DSI DESIGN SERVICES INC. THEY ARE NOT TO USED ON ANYOTHER PROJECT OR FOR ANY OTHER PURPOSE WITHOUT SPECIFIC WRITTEN PERMISSION. ALL RIGHTS RESERVED.

INTERIOR ELEVATION KEY

NORTH
ACTUAL
PLAN

MARK	DATE	REVISONS

COMM. NO:	06003.00	DRAWN:	CAD
DATE:	02/15/06	CHECKED:	ENG
SCALE:	1/4" = 1'0"		
FILE:			

OCI ASSOCIATES, INC.
Consulting Engineers
Orlando - FL Pierce - West Palm Beach - FL Miami
427 Centerpointe Circle, Suite 1825
Altamonte Springs, FL 32701
(407) 332-0180 Fax: (407) 332-7704
www.ocieng.com
CERTIFICATE OF AUTHORIZATION #6291

FLOOR PLAN - PLUMBING

SEAL

JASON L. SMITH, P.E.
427 CENTERPOINTE CIR., SUITE 1825
ALTAMONTE SPRINGS, FL. 32701
FL. REG. NO.: PE57743
6/5/06

ARCHITECT/CONSULTANT

SHEET NUMBER

P1.0

MON 05 JUN 2006 <08:07:26AM EST> \\PLOTTING\06046P10.DWG

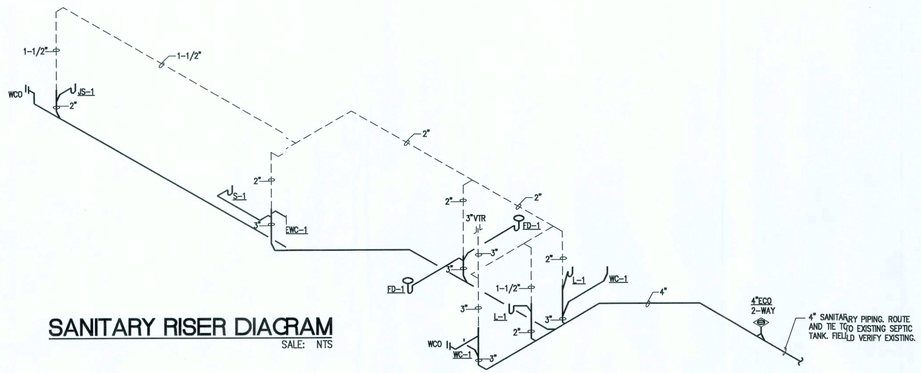

SANITARY RISER DIAGRAM

SALE: NTS

PLUMBING FIXTURE SCHEDULE									
MARK	WC-1	L-1	S-1	EWC-1	MB-1	IWH-1	HB-1	FD-1	IMB-1
DESCRIPTION	HANDICAPPED WATER CLOSET (1)(3)	HANDICAPPED LAVATORY (3)(8)	SINGLE COMP. SINK	HANDICAP ELEC. WATER COOLER (3)	MOP BASIN (6)	INSTANTANEOUS ELECTRIC WATER HEATER (4)	HOSE BIBB (5)	FLOOR DRAIN (7)	ICE MAKER VALVE BOX
MANUFACTURER	AMER. STD.	AMER. STD.	ELKAY	ELKAY	FIAT	CHRONOMITE	WOODFORD	ZURN	GUY GRAY
MODEL NO.	2168.100	0355.172 0355.198	LR-1722	EZ8	MSB-2424	S-23L	24P-3/4	ZB-415-P-VP	BIM876
CARRIER									
MANUFACTURER	----	ZURN	----	----	----	----	----	----	----
MODEL NO.	----	ZR-1231	----	----	----	----	----	----	----
FLUSH VALVE									
MANUFACTURER	----	----	----	----	----	----	----	----	----
MODEL NO.	----	----	----	----	----	----	----	----	----
SUPPLY FITTING									
MANUFACTURER	----	McGUIRE	McGUIRE	McGUIRE	----	----	----	----	----
MODEL NO.	----	H2166LK	H2166LK	H2166LK	----	----	----	----	----
QUANTITY	----	2	2	1	----	----	----	----	----
FAUCET									
MANUFACTURER	----	AMER. STD.	ELKAY	----	FIAT	----	----	----	----
MODEL NO.	----	2385.004	LK-2452	----	830-AA	----	----	----	----
DRAIN									
MANUFACTURER	----	McGUIRE	McGUIRE	----	(2)	----	----	----	----
MODEL NO.	----	155NC GRID	151A	----	----	----	----	----	----
TRAP									
MANUFACTURER	----	McGUIRE	McGUIRE	McGUIRE	(2)	----	----	----	----
MODEL NO.	----	PW2150WC	8090CBOS	8090CBOS	----	----	----	----	----

SPECIAL ITEMS
(1) WITH ELONGATED OPEN FRONT SEAT BY OLSONITE.
(2) PROVIDED BY CONTRACTOR.
(3) MOUNTING HEIGHT PER LOCAL, STATE HANDICAP CODES.
(4) 2300 WATTS INSTANTANEOUS WATER HEATER 208V/1/60
(5) PROVIDE WITH VACUUM BREAKER.
(6) WITH VACUUM BREAKER. PROVIDE WITH HOSE AND HOSE BRACKET FIAT MODEL 832-AA, #1453-BB STRAINER AND FIAT 889-CC MOP HANGER.
(7) WITH ZURN Z-1022 TRAP PRIMER AND STAINLESS STEEL ACCESS COVER.
(8) DRILLED FOR SOAP DISPENSER

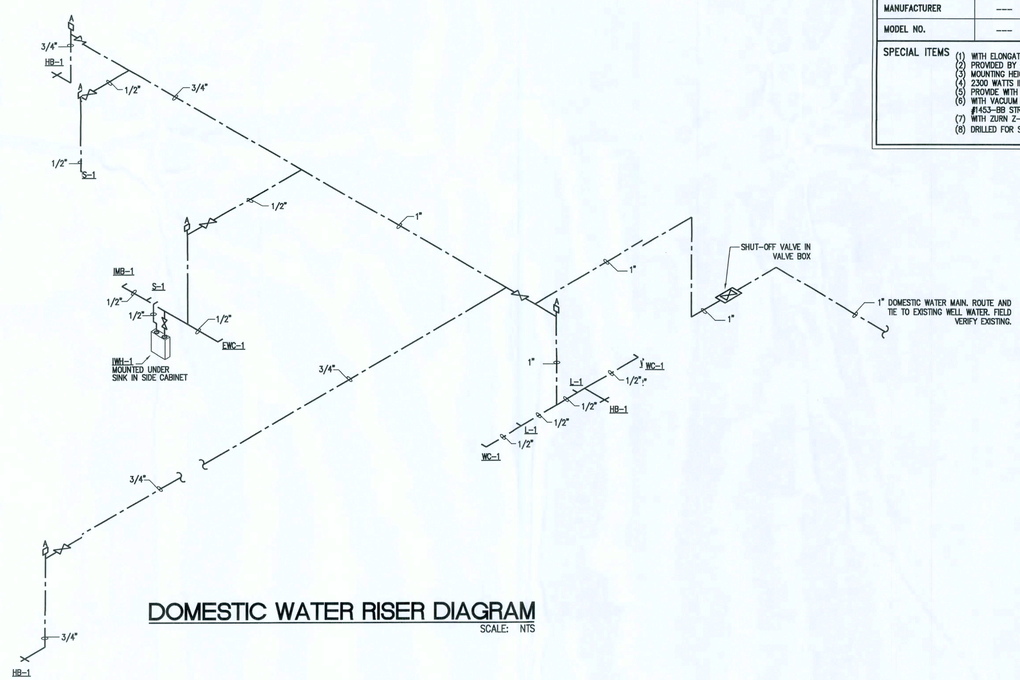

DOMESTIC WATER RISER DIAGRAM

SCALE: NTS

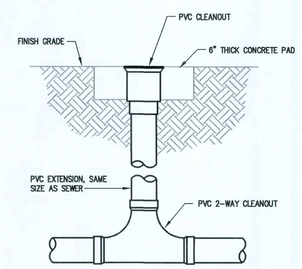

EXTERIOR 2-WAY CLEANOUT

N.T.S.

DESIGN SERVICES INCORPORATED
1778 N. PARK AVENUE, SUITE 100, MAITLAND, FL 32751,
TELEPHONE(407) 629-5755
LICENSE NO. F00061
ARCHITECTURE
INTERIOR DESIGN
SPACE PLANNING

PEOPLES STATE BANK

WEST OFFICE
(NEW BRANCH BANK)
LAKE CITY, FLORIDA

GENERAL NOTES

THE DESIGN, DRAWINGS, AND SPECIFICATION INCORPORATED HEREIN AS AN INSTRUMENT OF PROFESSIONAL SERVICES AE, AND SHALL BE THE SOLE PROPERTY OF DSI DESIGN SERVICES INC. THEY ARE NOT TO USED ON ANY OTHER PROJECT OR FOR ANY OTHER PURPOSE WITHOUT SPECIFIC WRITTEN PERMISSION. ALL RIGHTS RESERVED.

INTERIOR ELEVATION KEY

NORTH
ACTUAL
PLAN

MARK	DATE	REVISIONS

COMM. NO:	06003.0(	DRAWN:	CAD
DATE:	02/15/05	CHECKED:	ENG
SCALE:	1/4" = 1'0"		
FILE:			

OCI ASSOCIATES, INC.
Consulting Engineers
Orlando - Ft. Pierce - West Palm Beach - Ft. Myers
427 Centerpointe Circle, Ste 1025
Altamonte Springs, FL 32714
(407) 330-0080 Fax: (407) 331-7704
www.ocidesigns.com
CERTIFICATE OF AUTHORIZATION #2285

SCHEDULE, DETAILS AND RISERS - PLUMBING

SEAL

JASON T. SMITH, P.E.
427 CENTERPOINTE CIR., SUITE 1025
ALTAMONTE SPRINGS, FL 32714
FL REG. NO.: FE37743
6/3/04

ARCHITECT/CONSULTANT

SHEET NUMBER

P2.0

MON 05 JUN 2006 <DB:07:29AM EST> \\PLOTTING\06046P20.DWG

GENERAL NOTES:

1. ALL SUPPLY DIFFUSERS AND RETURN AIR GRILLES SHALL BE 24 X 24 LAY-IN MODULE WITH NECK SIZES AS INDICATED ON PLANS.
2. ALL REFRIGERANT PIPING SHALL BE SIZED AND INSULATED PER MANUFACTURER'S RECOMMENDATIONS.
3. ALL RETURN AIR GRILLES SHALL BE 22X22 NECK SIZE. PROVIDE SQUARE TO ROUND NECK TRANSITION AS REQUIRED.
4. REFER TO REFLECTED CEILING PLAN FOR EXACT LOCATIONS FOR CEILING MOUNTED AIR DISTRIBUTION DEVICES. ALL GRILLES AND DIFFUSERS SHALL BE PERFORATED FACE WITH DIRECTIONAL LOUVERS BEHIND PERFORATED FLUSH FACE AND VOLUME DAMPER EQUAL TO TITUS MODEL TDC-AA. PAINT INSIDE OF DUCTWORK, DIFFUSERS AND GRILLES VISIBLE THROUGH DIFFUSERS AND GRILLES FLAT BLACK.

H.V.A.C. LEGEND

- SUPPLY DIFFUSER
- RETURN AIR GRILLE
- EXHAUST AIR GRILLE
- X/X RIGID DUCTWORK (WIDTH/DEPTH)
- ELBOW WITH TURNING VANES
- MANUAL SPLITTER DAMPER
- FLEXIBLE DUCT WITH SPIN-IN FITTING AND MANUAL VOLUME DAMPER
- MANUAL VOLUME DAMPER
- FD FIRE DAMPER
- DS DUCT MOUNTED SMOKE DETECTOR
- T REMOTE TEST STATION
- T THERMOSTAT
- CD CONDENSATE DRAIN LINE
- UC DOOR UNDERCUT

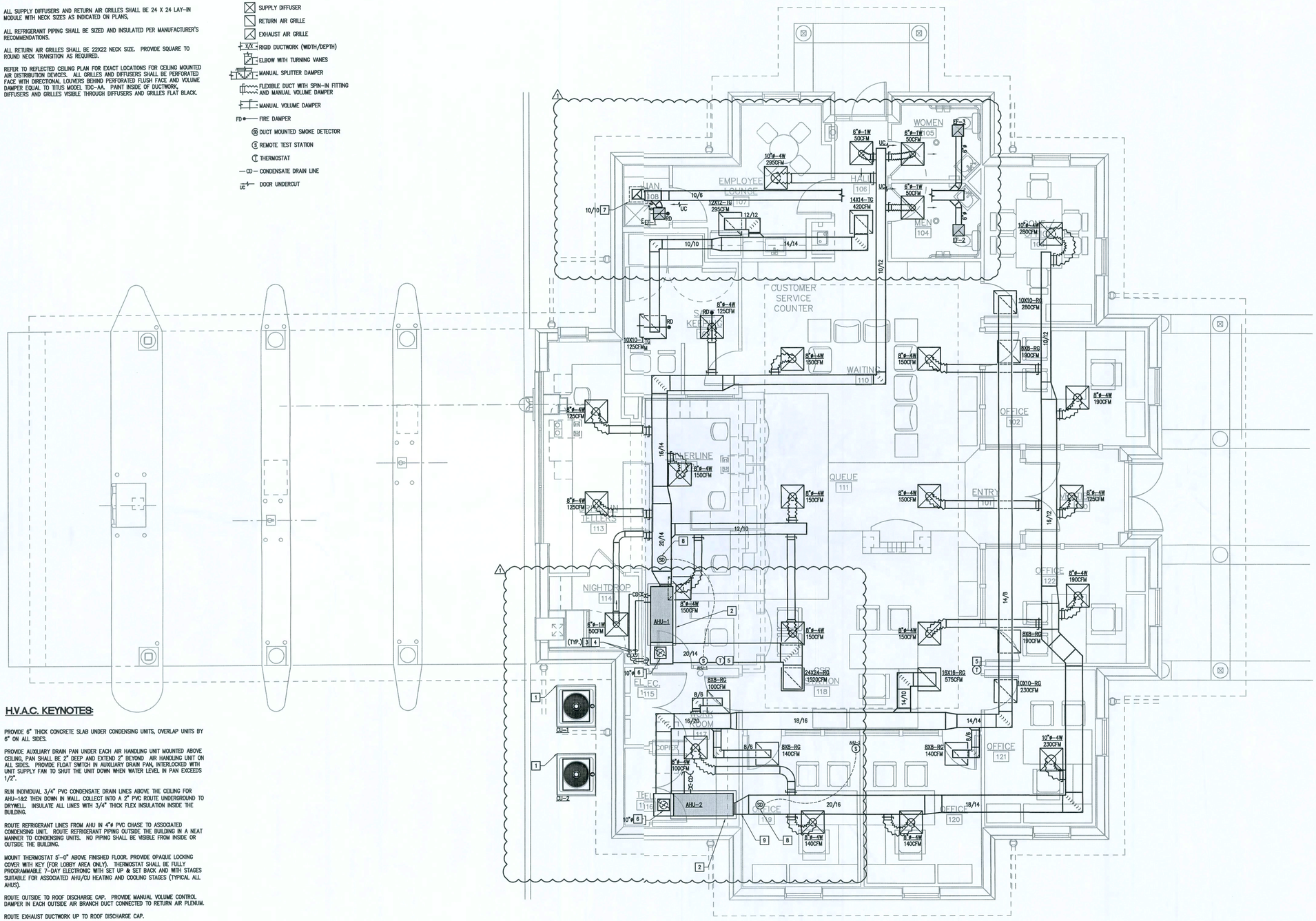

H.V.A.C. KEYNOTES:

1. PROVIDE 6" THICK CONCRETE SLAB UNDER CONDENSING UNITS, OVERLAP UNITS BY 6" ON ALL SIDES.
2. PROVIDE AUXILIARY DRAIN PAN UNDER EACH AIR HANDLING UNIT MOUNTED ABOVE CEILING. PAN SHALL BE 2" DEEP AND EXTEND 2" BEYOND AIR HANDLING UNIT ON ALL SIDES. PROVIDE FLOAT SWITCH IN AUXILIARY DRAIN PAN, INTERLOCKED WITH UNIT SUPPLY FAN TO SHUT THE UNIT DOWN WHEN WATER LEVEL IN PAN EXCEEDS 1/2".
3. RUN INDIVIDUAL 3/4" PVC CONDENSATE DRAIN LINES ABOVE THE CEILING FOR AHU-1&2 THEN DOWN IN WALL. COLLECT INTO A 2" PVC ROUTE UNDERGROUND TO DRYWELL. INSULATE ALL LINES WITH 3/4" THICK FLEX INSULATION INSIDE THE BUILDING.
4. ROUTE REFRIGERANT LINES FROM AHU IN 4"ø PVC CHASE TO ASSOCIATED CONDENSING UNIT. ROUTE REFRIGERANT PIPING OUTSIDE THE BUILDING IN A NEAT MANNER TO CONDENSING UNITS. NO PIPING SHALL BE VISIBLE FROM INSIDE OR OUTSIDE THE BUILDING.
5. MOUNT THERMOSTAT 5'-0" ABOVE FINISHED FLOOR. PROVIDE OPAQUE LOCKING COVER WITH KEY (FOR LOBBY AREA ONLY). THERMOSTAT SHALL BE FULLY PROGRAMMABLE 7-DAY ELECTRONIC WITH SET UP & SET BACK AND WITH STAGES SUITABLE FOR ASSOCIATED AHU/CU HEATING AND COOLING STAGES (TYPICAL ALL AHUS).
6. ROUTE OUTSIDE TO ROOF DISCHARGE CAP. PROVIDE MANUAL VOLUME CONTROL DAMPER IN EACH OUTSIDE AIR BRANCH DUCT CONNECTED TO RETURN AIR PLENUM.
7. ROUTE EXHAUST DUCTWORK UP TO ROOF DISCHARGE CAP.
8. PROVIDE DUCT MOUNTED SMOKE DETECTOR IN MAIN SUPPLY AIR DUCT. DETECTORS SHALL BE INTERLOCKED WITH ASSOCIATED SUPPLY AIR FAN.
9. COORDINATE LOCATION OF AHU AND DUCTWORK WITH STUD LOCATIONS. PROVIDE ENOUGH CLEARANCE FOR A CLEAN INSTALLATION.

FLOOR PLAN - HVAC

SCALE: 1/4" = 1'-0"

DESIGN SERVICES INCORPORATED
1778 N. PARK AVENUE, SUITE 100, MAITLAND, FL 32751,
TELEPHONE(407) 629-5755
LICENSE NO. F00061
ARCHITECTURE INTERIOR DESIGN SPACE PLANNING

PEOPLES STATE BANK

WEST OFFICE
(NEW BRANCH BANK)
LAKE CITY, FLORIDA

GENERAL NOTES

THE DESIGN, DRAWINGS, AND SPECIFICATIONS INCORPORATED HEREIN AS AN INSTRUMENT OF PROFESSIONAL SERVICES ARE, AND SHALL BE THE SOLE PROPERTY OF DSI DESIGN SERVICES INC. THEY ARE NOT TO USED ON ANY OTHER PROJECT OR FOR ANY OTHER PURPOSE WITHOUT SPECIFIC WRITTEN PERMISSION. ALL RIGHTS RESERVED.

INTERIOR ELEVATION KEY

NORTH
ACTUAL
PLAN

MARK	DATE	REVISIONS
1	06/05/06	ADDENDUM #1

COMM. NO:	06103.00	DRAWN:	JD
DATE:	02/15/06	CHECKED:	JLS
SCALE:	1/4"= 1'0"		
FILE:			

OCI ASSOCIATES, INC.
Consulting Engineers
Orlando - Ft. Pierce West Palm Beach - Ft. Myers
427 Centerpointe Circle, Suite 1835
Altamonte Springs, FL 32701
(407) 332-0181 Fax: (407) 332-1704
www.ociassociates.com
CERTIFICATE OF AUTHORIZATION #4289
ASSOCIATES INC.

FLOOR PLAN - HVAC

SEAL

JASON L. SMITH P.E.
427 CENTERPOINTE CIR. SUITE 1835
ALTAMONTE SPRINGS, FL 32701
FL REG. NO.: 0027743
6/7/06

ARCHITECT/CONSULTANT

SHEET NUMBER

M1.0

TUE 06 JUN 2006 <04:48:48PM EST> \\06 JOBS\06046 - PEOPLE'S STATE BANK WEST OFFICE\DWGS\06046W10.DWG

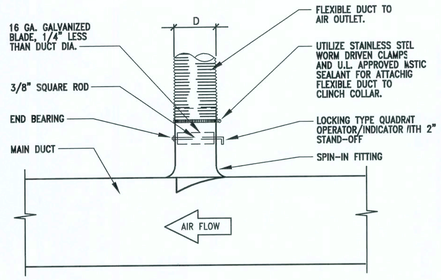

1 M2.0 SPIN-IN BRANCH CONNECTION TO SINGLE AIR OUTLET

NTS

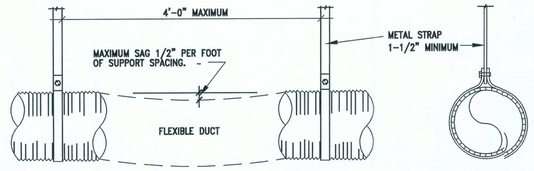

NOTES:

1. DUCT SHOULD EXTEND STRAIGHT FOR SEVERAL INCHES FROM A CONNECTION BEFORE BENDING.
2. SUPPORT SYSTEM MUST NOT DAMAGE DUCT OR CAUSE OUT OF ROUND SHAPE.

2 M2.0 FLEX DUCT SUPPORT

NTS

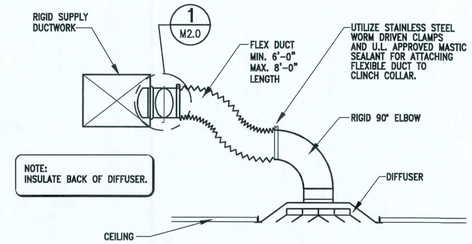

3 M2.0 DIFFUSER AND FLEX DUCT DETAIL

NTS

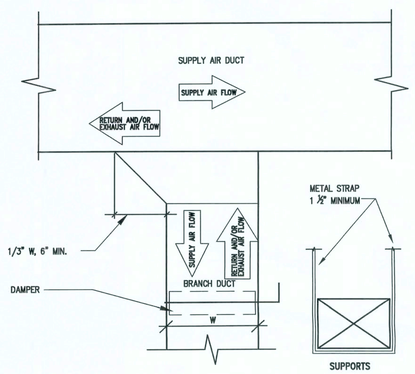

4 M2.0 DUCT WITH SPLITTER DAMPER AT SINGLE BRANCH

NTS

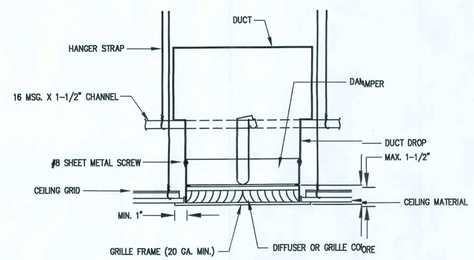

5 M2.0 DIFFUSER/GRILLE RADIANT DAMPER DETAIL

NTS

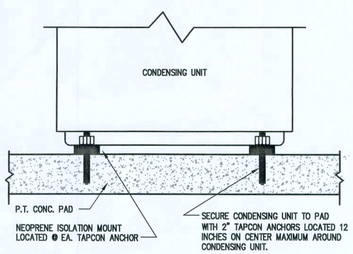

6 M2.0 CONDENSING UNIT AT PAD DETAIL

NTS

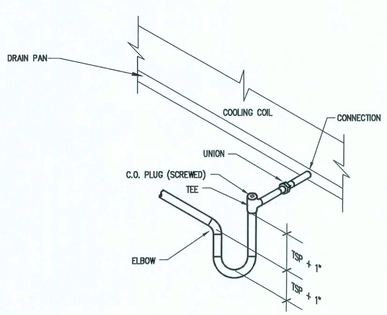

7 M2.0 CONDENSATE DRAIN DETAIL

NTS

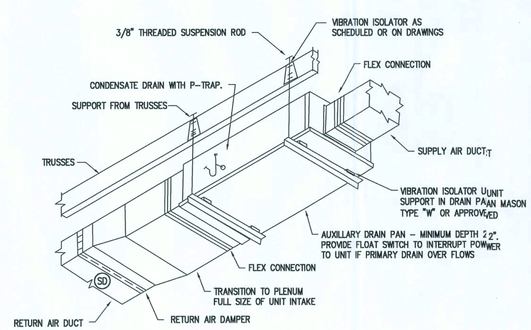

8 M2.0 SUSPENDED HORIZONTAL AIR HANDLING UNIT DETAIL

NTS

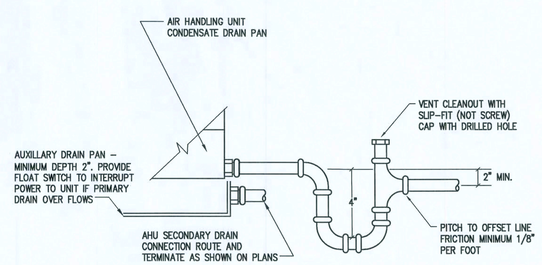

9 M2.0 CONDENSATE DRAIN DETAIL

NTS

DESIGN SERVICES INCORPORATED
1778 N. PARK AVENUE, SUITE 100, MAITLAND, FL 32751.
TELEPHONE(407) 629-5755
LICENSE NO. F00061
ARCHITECTURE
INTERIOR DESIGN
SPACE PLANNING

PEOPLES STATE BANK

WEST OFFICE
(NEW BRANCH BANK)
LAKE CITY, FLORIDA

GENERAL NOTES

THE DESIGN, DRAWINGS, AND SPECIFICATIONS INCORPORATED HEREIN AS AN INSTRUMENT OF PROFESSIONAL SERVICES ARE, AND SHALL BE THE SOLE PROPERTY OF DSI DESIGN SERVICES INC. THEY ARE NOT TO BE USED ON ANY OTHER PROJECT OR FOR ANY OTHER PURPOSE WITHOUT SPECIFIC WRITTEN PERMISSION. ALL RIGHTS RESERVED.

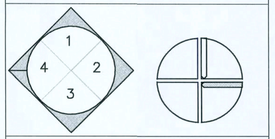

INTERIOR ELEVATION KEY

NORTH

ACTUAL
PLAN

MARK	DATE	REVISIONS

COMM. NO:	06003.00	DRAWN:	JD
DATE:	02/15/06	CHECKED:	JLS
SCALE:	N.T.S.		
FILE:			

CCI ASSOCIATES, INC.
Consulting Engineers
Orlando - Ft. Pierce - West Palm Beach - Ft. Myers
407 Cantonments Circle, Suite 100
Altamonte Springs, FL 32701
(407) 332-050 Fax: (407) 332-734
www.ccieng.com
CERTIFICATE OF AUTHORIZATION 5285
ASSOCIATES INC.

DETAILS - HVAC

SEAL

2/15/06

JASON L. SMITH, P.E.
427 CENTERPOINTE CIR., SUITE 182
ALTAMONTE SPRINGS, FL 32701
FL REG. NO.: PE27745

ARCHITECT/CONSULTANT

SHEET NUMBER

M2.0

MON 05 JUN 2006 <08:07:17AM EST> \\PLOTTING\06046M20.DWG