Builders FirstSource

HLAKMF

Project Information:

Builder: ADAMS FRAMING AND CONSTRUCTI
Model: CUSTOM
Builders FirstSource Job #: L283727
Street: 450 HAPPY JACK LANE
City: Lake City
County: Columbia
Building Code: FBC2004/TPI2002
Computer Program Used: MiTek 6.3

Builders FirstSour
2525 E. Duval St.
Lake City, FL 32055

JULIUS LEE LICENSE NO. 34869 STATE OF FLORIDA PROFESSIONAL ENGINEER

JULIUS LEE'S CONSULT. ENGR INC
1455 SW 4TH AVE , DELRAY BEACH
FLORIDA. 33444

Truss Design Information:

Gravity Loads
Roof: 32 psf Total
Floor: 55 psf Total

Wind
Wind Standard: ASCE 7-02
Wind Speed: 110 mph
Mean Roof Ht: 16 ft
Exposure: B

Note: Refer to individual truss design drawings for special loading conditions, design criteria, truss geometry, lumber, and plate information.

Design Professional Information:

Design Professional Of Record: **License # :**
Delegated Truss Engineer: Julius Lee **License # :** 34869

REVIEWED
By julius lee at 7:12 pm, Jul 23, 2008

This truss specification package consists of this index sheet and 44 truss design drawings. This signed and sealed index sheet indicates acceptance of my professional engineering responsibility solely for listed truss design drawings. The suitability and use of each truss component for any particular building is the responsibility of the building designer per ANSI/TPI 1-1995, Section 2.

Truss #	Truss Label	Drawing #	Seal Date	Truss #	Truss Label	Drawing #	Seal Date	Truss #	Truss Label	Drawing #	Seal Date
1	CJ1	L283727001	7/23/2008	31	T14	L283727031	7/23/2008				
2	CJ3	L283727002	7/23/2008	32	T15	L283727032	7/23/2008				
3	CJ3A	L283727003	7/23/2008	33	T16	L283727033	7/23/2008				
4	CJ3B	L283727004	7/23/2008	34	T17	L283727034	7/23/2008				
5	CJ5	L283727005	7/23/2008	35	T17G	L283727035	7/23/2008				
6	CJ5A	L283727006	7/23/2008	36	T18	L283727036	7/23/2008				
7	EJ4	L283727007	7/23/2008	37	T19	L283727037	7/23/2008				
8	EJ7	L283727008	7/23/2008	38	T20	L283727038	7/23/2008				
9	EJ7A	L283727009	7/23/2008	39	T21	L283727039	7/23/2008				
10	HJ6	L283727010	7/23/2008	40	T21G	L283727040	7/23/2008				
11	HJ9	L283727011	7/23/2008	41	T22	L283727041	7/23/2008				
12	HJ9A	L283727012	7/23/2008	42	T23	L283727042	7/23/2008				
13	PB01	L283727013	7/23/2008	43	T24	L283727043	7/23/2008				
14	PB01G	L283727014	7/23/2008	44	T25	L283727044	7/23/2008				
15	T01G	L283727015	7/23/2008								
16	T02	L283727016	7/23/2008								
17	T02G	L283727017	7/23/2008								
18	T03	L283727018	7/23/2008								
19	T04	L283727019	7/23/2008								
20	T05	L283727020	7/23/2008								
21	T06	L283727021	7/23/2008								
22	T07	L283727022	7/23/2008								
23	T08	L283727023	7/23/2008								
24	T09	L283727024	7/23/2008								
25	T10	L283727025	7/23/2008								
26	T11	L283727026	7/23/2008								
27	T12	L283727027	7/23/2008								
28	T12G	L283727028	7/23/2008								
29	T13	L283727029	7/23/2008								
30	T13G	L283727030	7/23/2008								

© Builders FirstSource, Inc. 2002

Project Information:	Builder: ADAMS FRAMING AND CONSTRUCTI	Builders FirstSource
	Model: CUSTOM	2525 E. Duval St.
	Builders FirstSource Job #: L283727	Lake City, FL 32055

© Builders FirstSource, Inc. 2002

Job	Truss	Truss Type	Qty	Ply	ADAM'S FRAMING - DUDDING RES.
L283727	CJ1	JACK	4	1	L283727001 Job Reference (optional)

Builders FirstSource, Lake City, Fl 32055 — 6.300 s Apr 19 2006 MiTek Industries, Inc. Wed Jul 23 08:55:26 2008 Page 1

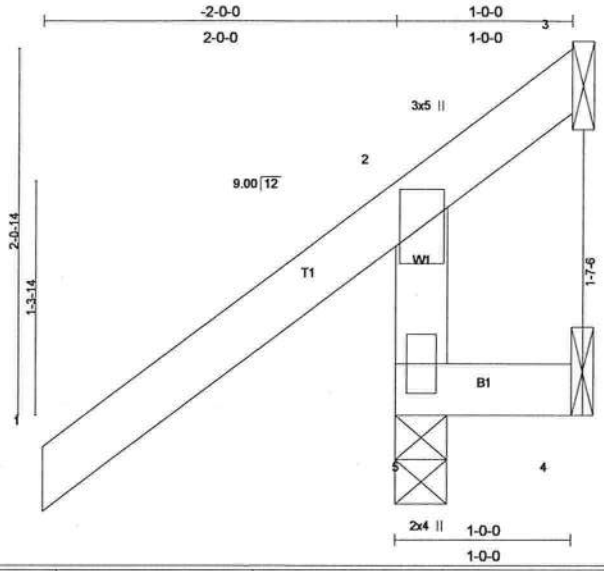

LOADING (psf)		SPACING 2-0-0	CSI		DEFL	in	(loc)	l/defl	L/d	PLATES	GRIP
TCLL	20.0	Plates Increase 1.25	TC	0.40	Vert(LL)	0.00	5	>999	360	MT20	244/190
TCDL	7.0	Lumber Increase 1.25	BC	0.06	Vert(TL)	0.00	5	>999	240		
BCLL	10.0 *	Rep Stress Incr YES	WB	0.00	Horz(TL)	-0.01	3	n/a	n/a		
BCDL	5.0	Code FBC2004/TPI2002	(Matrix)							Weight: 9 lb	

LUMBER
TOP CHORD 2 X 4 SYP No.2
BOT CHORD 2 X 4 SYP No.2
WEBS 2 X 4 SYP No.3

BRACING
TOP CHORD Structural wood sheathing directly applied or 1-0-0 oc purlins, except end verticals.
BOT CHORD Rigid ceiling directly applied or 10-0-0 oc bracing.

REACTIONS (lb/size) 5=291/0-3-8, 4=-24/Mechanical, 3=-97/Mechanical
Max Horz 5=133(load case 6)
Max Uplift5=-201(load case 6), 4=-41(load case 6), 3=-97(load case 1)
Max Grav 5=291(load case 1), 4=5(load case 2), 3=95(load case 6)

FORCES (lb) - Maximum Compression/Maximum Tension
TOP CHORD 2-5=-258/288, 1-2=0/70, 2-3=-85/67
BOT CHORD 4-5=0/0

JOINT STRESS INDEX
2 = 0.59 and 5 = 0.48

NOTES (5)
1) Wind: ASCE 7-02; 110mph (3-second gust); h=16ft; TCDL=4.2psf; BCDL=3.0psf; Category II; Exp B; enclosed; MWFRS gable end zone and C-C Exterior(2) zone; end vertical left exposed; Lumber DOL=1.60 plate grip DOL=1.60. This truss is designed for C-C for members and forces, and for MWFRS for reactions specified.
2) *This truss has been designed for a 10.0 psf bottom chord live load nonconcurrent with any other live loads.
3) All bearings are assumed to be SYP No.2 crushing capacity of 565.00 psi
4) Provide mechanical connection (by others) of truss to bearing plate capable of withstanding 201 lb uplift at joint 5, 41 lb uplift at joint 4 and 97 lb uplift at joint 3.
5) Truss Design Engineer: Julius Lee, PE: Florida P.E. License No. 34869: Address: 1109 Coastal Bay Blvd. Boynton Beach, FL 33435

LOAD CASE(S) Standard

Job	Truss	Truss Type	Qty	Ply	ADAM'S FRAMING - DUDDING RES.
L283727	CJ3	JACK	2	1	L283727002 Job Reference (optional)

Builders FirstSource, Lake City, Fl 32055 — 6.300 s Apr 19 2006 MiTek Industries, Inc. Wed Jul 23 08:55:27 2008 Page 1

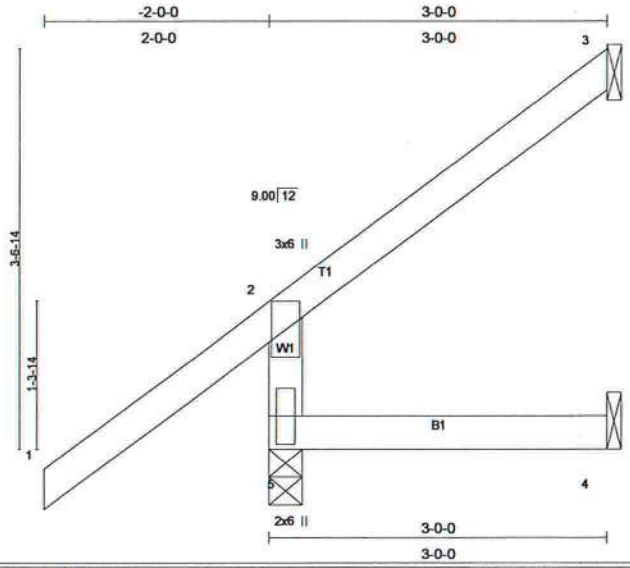

LOADING (psf)			SPACING 2-0-0	CSI		DEFL	in	(loc)	l/defl	L/d	PLATES	GRIP
TCLL	20.0		Plates Increase 1.25	TC	0.53	Vert(LL)	0.01	4-5	>999	360	MT20	244/190
TCDL	7.0		Lumber Increase 1.25	BC	0.13	Vert(TL)	-0.00	4-5	>999	240		
BCLL	10.0	*	Rep Stress Incr YES	WB	0.00	Horz(TL)	-0.02	3	n/a	n/a		
BCDL	5.0		Code FBC2004/TPI2002	(Matrix)							Weight: 15 lb	

LUMBER
TOP CHORD 2 X 4 SYP No.2
BOT CHORD 2 X 4 SYP No.2
WEBS 2 X 4 SYP No.3

BRACING
TOP CHORD Structural wood sheathing directly applied or 3-0-0 oc purlins, except end verticals.
BOT CHORD Rigid ceiling directly applied or 10-0-0 oc bracing.

REACTIONS (lb/size) 5=250/0-3-8, 3=41/Mechanical, 4=4/Mechanical
Max Horz 5=226(load case 6)
Max Uplift5=-120(load case 6), 3=-70(load case 6), 4=-19(load case 6)
Max Grav 5=250(load case 1), 3=41(load case 1), 4=37(load case 2)

FORCES (lb) - Maximum Compression/Maximum Tension
TOP CHORD 2-5=-226/181, 1-2=0/70, 2-3=-66/15
BOT CHORD 4-5=0/0

JOINT STRESS INDEX
2 = 0.67 and 5 = 0.53

NOTES (5)
1) Wind: ASCE 7-02; 110mph (3-second gust); h=16ft; TCDL=4.2psf; BCDL=3.0psf; Category II; Exp B; enclosed; MWFRS gable end zone and C-C Exterior(2) zone; end vertical left exposed; Lumber DOL=1.60 plate grip DOL=1.60. This truss is designed for C-C for members and forces, and for MWFRS for reactions specified.
2) *This truss has been designed for a 10.0 psf bottom chord live load nonconcurrent with any other live loads.
3) All bearings are assumed to be SYP No.2 crushing capacity of 565.00 psi
4) Provide mechanical connection (by others) of truss to bearing plate capable of withstanding 120 lb uplift at joint 5, 70 lb uplift at joint 3 and 19 lb uplift at joint 4.
5) Truss Design Engineer: Julius Lee, PE: Florida P.E. License No. 34869: Address: 1109 Coastal Bay Blvd. Boynton Beach, FL 33435

LOAD CASE(S) Standard

Job	Truss	Truss Type	Qty	Ply	ADAM'S FRAMING - DUDDING RES.
L283727	CJ3A	SPECIAL	2	1	L283727003 Job Reference (optional)

Builders FirstSource, Lake City, Fl 32055 — 6.300 s Apr 19 2006 MiTek Industries, Inc. Wed Jul 23 08:55:28 2008 Page 1

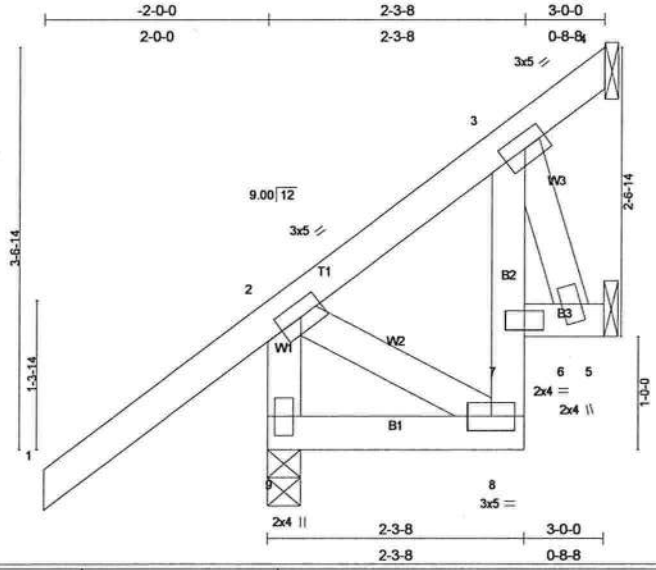

LOADING (psf)		SPACING	2-0-0	CSI		DEFL	in	(loc)	l/defl	L/d	PLATES	GRIP
TCLL	20.0	Plates Increase	1.25	TC	0.35	Vert(LL)	-0.00	9	>999	360	MT20	244/190
TCDL	7.0	Lumber Increase	1.25	BC	0.04	Vert(TL)	-0.00	8-9	>999	240		
BCLL	10.0 *	Rep Stress Incr	YES	WB	0.07	Horz(TL)	-0.00	6	n/a	n/a		
BCDL	5.0	Code FBC2004/TPI2002		(Matrix)							Weight: 24 lb	

LUMBER
TOP CHORD 2 X 4 SYP No.2
BOT CHORD 2 X 4 SYP No.2 *Except*
B2 2 X 4 SYP No.3
WEBS 2 X 4 SYP No.3

BRACING
TOP CHORD Structural wood sheathing directly applied or 3-0-0 oc purlins, except end verticals.
BOT CHORD Rigid ceiling directly applied or 10-0-0 oc bracing, Except:
6-0-0 oc bracing: 6-7.

REACTIONS (lb/size) 9=250/0-3-8, 4=50/Mechanical, 6=-5/Mechanical
Max Horz 9=226(load case 6)
Max Uplift9=-121(load case 6), 4=-89(load case 6), 6=-42(load case 7)
Max Grav 9=250(load case 1), 4=50(load case 1), 6=61(load case 4)

FORCES (lb) - Maximum Compression/Maximum Tension
TOP CHORD 2-9=-240/146, 1-2=0/70, 2-3=-73/13, 3-4=-66/28
BOT CHORD 8-9=-251/0, 7-8=-132/27, 3-7=-131/35, 6-7=-17/22, 5-6=0/0
WEBS 2-8=-3/286, 3-6=-61/48

JOINT STRESS INDEX
2 = 0.14, 3 = 0.05, 6 = 0.03, 7 = 0.01, 8 = 0.15 and 9 = 0.09

NOTES (5)
1) Wind: ASCE 7-02; 110mph (3-second gust); h=16ft; TCDL=4.2psf; BCDL=3.0psf; Category II; Exp B; enclosed; MWFRS gable end zone and C-C Exterior(2) zone; end vertical left exposed; Lumber DOL=1.60 plate grip DOL=1.60. This truss is designed for C-C for members and forces, and for MWFRS for reactions specified.
2) *This truss has been designed for a 10.0 psf bottom chord live load nonconcurrent with any other live loads.
3) All bearings are assumed to be SYP No.2 crushing capacity of 565.00 psi
4) Provide mechanical connection (by others) of truss to bearing plate capable of withstanding 121 lb uplift at joint 9, 89 lb uplift at joint 4 and 42 lb uplift at joint 6.
5) Truss Design Engineer: Julius Lee, PE: Florida P.E. License No. 34869: Address: 1109 Coastal Bay Blvd. Boynton Beach, FL 33435

LOAD CASE(S) Standard

Job	Truss	Truss Type	Qty	Ply	ADAM'S FRAMING - DUDDING RES.
L283727	CJ3B	JACK	4	1	L283727004
					Job Reference (optional)

Builders FirstSource, Lake City, Fl 32055 — 6.300 s Apr 19 2006 MiTek Industries, Inc. Wed Jul 23 08:55:29 2008 Page 1

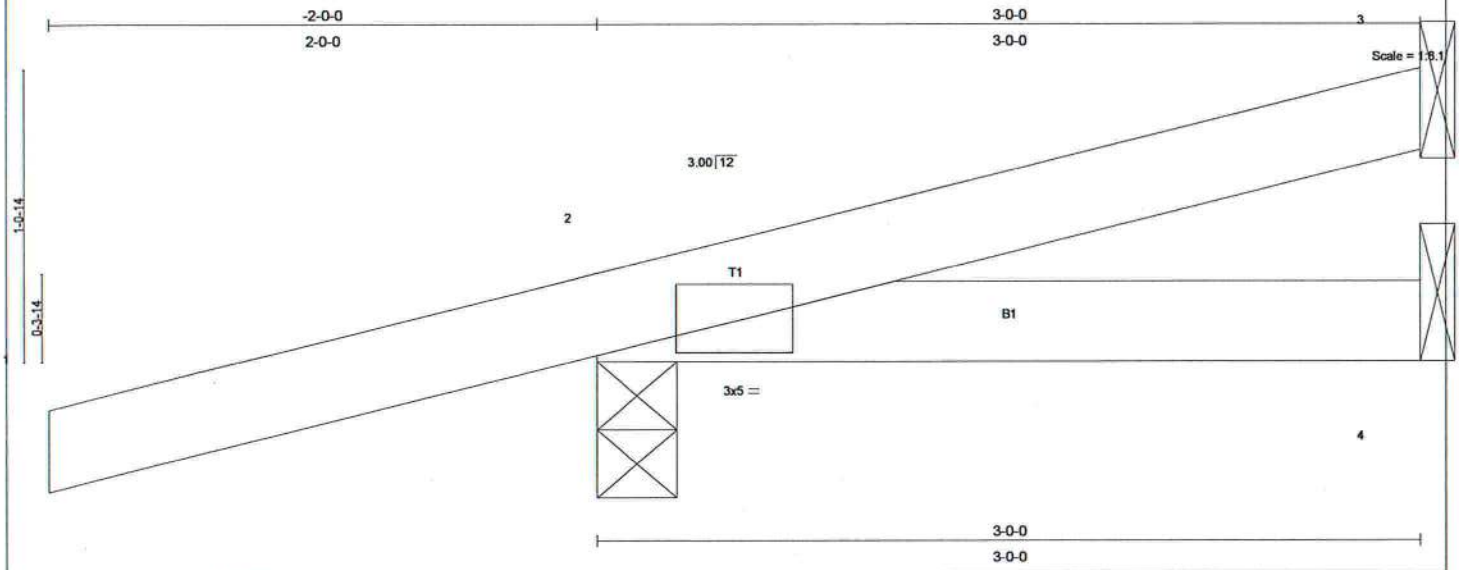

Plate Offsets (X,Y): [2:0-2-0,0-1-8]

LOADING (psf)		SPACING 2-0-0	CSI	DEFL in (loc) l/defl L/d	PLATES GRIP
TCLL 20.0		Plates Increase 1.25	TC 0.25	Vert(LL) 0.01 2-4 >999 360	MT20 244/190
TCDL 7.0		Lumber Increase 1.25	BC 0.08	Vert(TL) -0.01 2-4 >999 240	
BCLL 10.0	*	Rep Stress Incr YES	WB 0.00	Horz(TL) -0.00 3 n/a n/a	
BCDL 5.0		Code FBC2004/TPI2002	(Matrix)		Weight: 12 lb

LUMBER
TOP CHORD 2 X 4 SYP No.2
BOT CHORD 2 X 4 SYP No.2

BRACING
TOP CHORD Structural wood sheathing directly applied or 3-0-0 oc purlins.
BOT CHORD Rigid ceiling directly applied or 10-0-0 oc bracing.

REACTIONS (lb/size) 3=31/Mechanical, 2=250/0-3-8, 4=14/Mechanical
Max Horz 2=66(load case 4)
Max Uplift3=-21(load case 7), 2=-244(load case 4), 4=-27(load case 4)
Max Grav 3=31(load case 1), 2=250(load case 1), 4=42(load case 2)

FORCES (lb) - Maximum Compression/Maximum Tension
TOP CHORD 1-2=0/25, 2-3=-32/4
BOT CHORD 2-4=0/0

JOINT STRESS INDEX
2 = 0.12

NOTES (5)
1) Wind: ASCE 7-02; 110mph (3-second gust); h=16ft; TCDL=4.2psf; BCDL=3.0psf; Category II; Exp B; enclosed; MWFRS gable end zone and C-C Exterior(2) zone; porch left and right exposed; Lumber DOL=1.60 plate grip DOL=1.60. This truss is designed for C-C for members and forces, and for MWFRS for reactions specified.
2) *This truss has been designed for a 10.0 psf bottom chord live load nonconcurrent with any other live loads.
3) All bearings are assumed to be SYP No.2 crushing capacity of 565.00 psi
4) Provide mechanical connection (by others) of truss to bearing plate capable of withstanding 21 lb uplift at joint 3, 244 lb uplift at joint 2 and 27 lb uplift at joint 4.
5) Truss Design Engineer: Julius Lee, PE: Florida P.E. License No. 34869: Address: 1109 Coastal Bay Blvd. Boynton Beach, FL 33435

LOAD CASE(S) Standard

Job	Truss	Truss Type	Qty	Ply	ADAM'S FRAMING - DUDDING RES.
L283727	CJ5	JACK	2	1	L283727005
					Job Reference (optional)

Builders FirstSource, Lake City, Fl 32055 — 6.300 s Apr 19 2006 MiTek Industries, Inc. Wed Jul 23 08:55:29 2008 Page 1

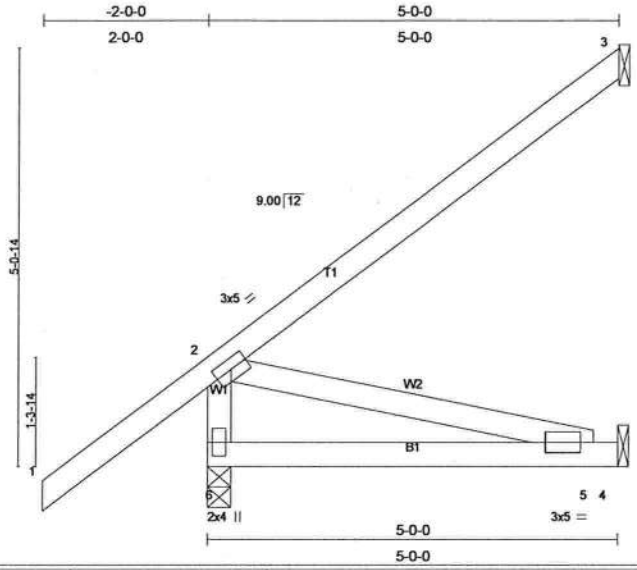

LOADING (psf)			SPACING	2-0-0	CSI		DEFL	in	(loc)	l/defl	L/d	PLATES	GRIP
TCLL	20.0		Plates Increase	1.25	TC	0.35	Vert(LL)	-0.03	5-6	>999	360	MT20	244/190
TCDL	7.0		Lumber Increase	1.25	BC	0.16	Vert(TL)	-0.05	5-6	>999	240		
BCLL	10.0	*	Rep Stress Incr	YES	WB	0.08	Horz(TL)	-0.01	3	n/a	n/a		
BCDL	5.0		Code FBC2004/TPI2002		(Matrix)							Weight: 29 lb	

LUMBER
TOP CHORD 2 X 4 SYP No.2
BOT CHORD 2 X 4 SYP No.2
WEBS 2 X 4 SYP No.3

BRACING
TOP CHORD Structural wood sheathing directly applied or 5-0-0 oc purlins, except end verticals.
BOT CHORD Rigid ceiling directly applied or 10-0-0 oc bracing.

REACTIONS (lb/size) 6=295/0-3-8, 3=103/Mechanical, 4=24/Mechanical
Max Horz 6=295(load case 6)
Max Uplift6=-114(load case 6), 3=-108(load case 6), 4=-51(load case 6)
Max Grav 6=295(load case 1), 3=103(load case 1), 4=72(load case 2)

FORCES (lb) - Maximum Compression/Maximum Tension
TOP CHORD 2-6=-271/146, 1-2=0/70, 2-3=-96/47
BOT CHORD 5-6=-328/0, 4-5=0/0
WEBS 2-5=0/337

JOINT STRESS INDEX
2 = 0.15, 5 = 0.12 and 6 = 0.10

NOTES (5)
1) Wind: ASCE 7-02; 110mph (3-second gust); h=16ft; TCDL=4.2psf; BCDL=3.0psf; Category II; Exp B; enclosed; MWFRS gable end zone and C-C Exterior(2) zone; end vertical left exposed; Lumber DOL=1.60 plate grip DOL=1.60. This truss is designed for C-C for members and forces, and for MWFRS for reactions specified.
2) *This truss has been designed for a 10.0 psf bottom chord live load nonconcurrent with any other live loads.
3) All bearings are assumed to be SYP No.2 crushing capacity of 565.00 psi
4) Provide mechanical connection (by others) of truss to bearing plate capable of withstanding 114 lb uplift at joint 6, 108 lb uplift at joint 3 and 51 lb uplift at joint 4.
5) Truss Design Engineer: Julius Lee, PE: Florida P.E. License No. 34869: Address: 1109 Coastal Bay Blvd. Boynton Beach, FL 33435

LOAD CASE(S) Standard

Job	Truss	Truss Type	Qty	Ply	ADAM'S FRAMING - DUDDING RES.
L283727	CJ5A	SPECIAL	2	1	L283727006 Job Reference (optional)

Builders FirstSource, Lake City, Fl 32055

6.300 s Apr 19 2006 MiTek Industries, Inc. Wed Jul 23 08:55:30 2008 Page 1

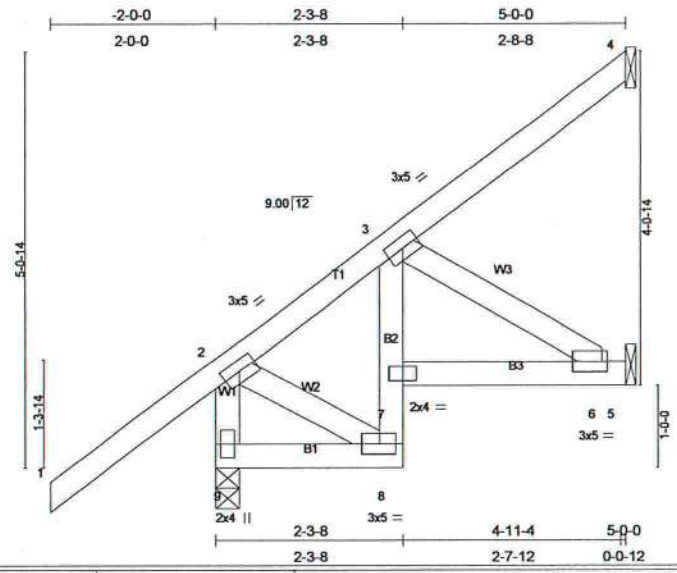

LOADING (psf)			SPACING	2-0-0	CSI		DEFL	in	(loc)	l/defl	L/d	PLATES	GRIP
TCLL	20.0		Plates Increase	1.25	TC	0.35	Vert(LL)	-0.01	6-7	>999	360	MT20	244/190
TCDL	7.0		Lumber Increase	1.25	BC	0.26	Vert(TL)	-0.01	6-7	>999	240		
BCLL	10.0	*	Rep Stress Incr	YES	WB	0.07	Horz(TL)	-0.02	5	n/a	n/a		
BCDL	5.0		Code FBC2004/TPI2002		(Matrix)							Weight: 33 lb	

LUMBER
TOP CHORD 2 X 4 SYP No.2
BOT CHORD 2 X 4 SYP No.2 *Except*
B2 2 X 4 SYP No.3
WEBS 2 X 4 SYP No.3

BRACING
TOP CHORD Structural wood sheathing directly applied or 5-0-0 oc purlins, except end verticals.
BOT CHORD Rigid ceiling directly applied or 10-0-0 oc bracing, Except:
6-0-0 oc bracing: 7-8.

REACTIONS (lb/size) 9=295/0-3-8, 4=73/Mechanical, 5=54/Mechanical
Max Horz 9=295(load case 6)
Max Uplift9=-114(load case 6), 4=-93(load case 6), 5=-66(load case 6)
Max Grav 9=295(load case 1), 4=73(load case 1), 5=77(load case 2)

FORCES (lb) - Maximum Compression/Maximum Tension
TOP CHORD 2-9=-285/141, 1-2=0/70, 2-3=-122/15, 3-4=-75/35
BOT CHORD 8-9=-328/0, 7-8=-125/9, 3-7=-124/54, 6-7=-146/70, 5-6=0/0
WEBS 2-8=0/271, 3-6=-82/173

JOINT STRESS INDEX
2 = 0.14, 3 = 0.09, 6 = 0.05, 7 = 0.08, 8 = 0.14 and 9 = 0.10

NOTES (5)
1) Wind: ASCE 7-02; 110mph (3-second gust); h=16ft; TCDL=4.2psf; BCDL=3.0psf; Category II; Exp B; enclosed; MWFRS gable end zone and C-C Exterior(2) zone; end vertical left exposed; Lumber DOL=1.60 plate grip DOL=1.60. This truss is designed for C-C for members and forces, and for MWFRS for reactions specified.
2) *This truss has been designed for a 10.0 psf bottom chord live load nonconcurrent with any other live loads.
3) All bearings are assumed to be SYP No.2 crushing capacity of 565.00 psi
4) Provide mechanical connection (by others) of truss to bearing plate capable of withstanding 114 lb uplift at joint 9, 93 lb uplift at joint 4 and 66 lb uplift at joint 5.
5) Truss Design Engineer: Julius Lee, PE: Florida P.E. License No. 34869: Address: 1109 Coastal Bay Blvd. Boynton Beach, FL 33435

LOAD CASE(S) Standard

Job	Truss	Truss Type	Qty	Ply	ADAM'S FRAMING - DUDDING RES.
L283727	EJ4	JACK	1	1	L283727007 Job Reference (optional)

Builders FirstSource, Lake City, Fl 32055 — 6.300 s Apr 19 2006 MiTek Industries, Inc. Wed Jul 23 08:55:31 2008 Page 1

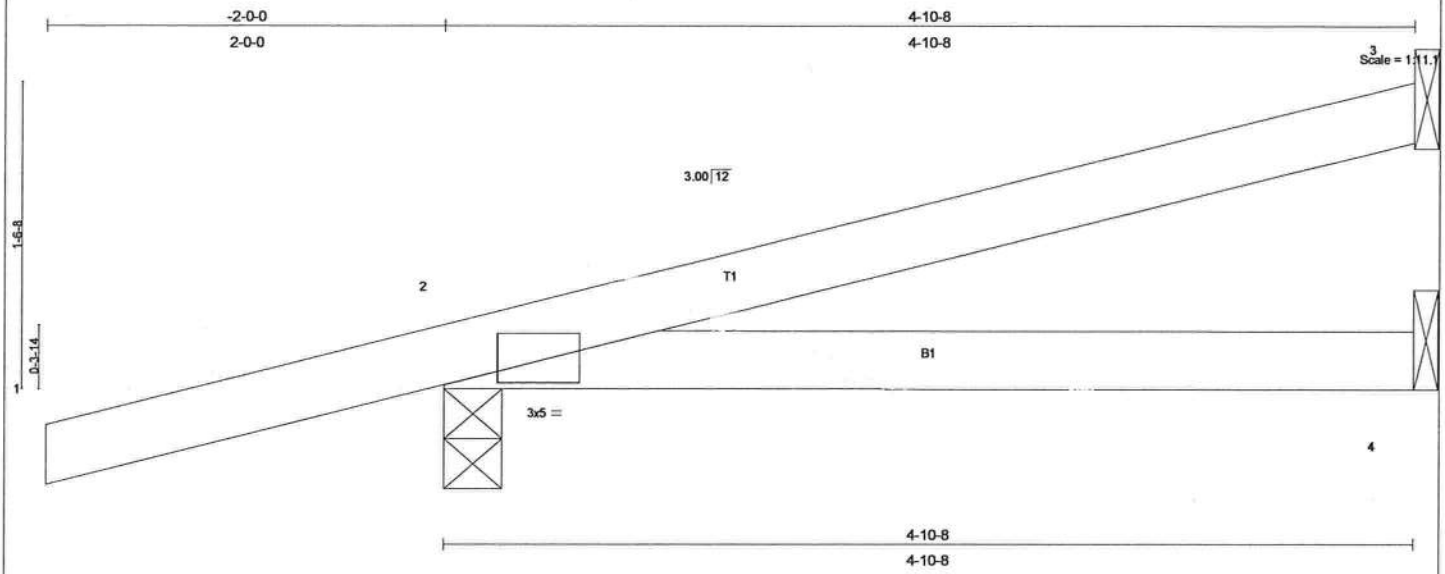

Plate Offsets (X,Y): [2:0-1-12,0-1-8]

LOADING (psf)			SPACING 2-0-0	CSI		DEFL	in	(loc)	l/defl	L/d	PLATES	GRIP
TCLL	20.0		Plates Increase 1.25	TC	0.25	Vert(LL)	0.08	2-4	>718	360	MT20	244/190
TCDL	7.0		Lumber Increase 1.25	BC	0.23	Vert(TL)	-0.04	2-4	>999	240		
BCLL	10.0	*	Rep Stress Incr YES	WB	0.00	Horz(TL)	-0.00	3	n/a	n/a		
BCDL	5.0		Code FBC2004/TPI2002	(Matrix)							Weight: 18 lb	

LUMBER
TOP CHORD 2 X 4 SYP No.2
BOT CHORD 2 X 4 SYP No.2

BRACING
TOP CHORD Structural wood sheathing directly applied or 4-10-8 oc purlins.
BOT CHORD Rigid ceiling directly applied or 10-0-0 oc bracing.

REACTIONS (lb/size) 3=99/Mechanical, 2=292/0-3-8, 4=23/Mechanical
Max Horz 2=87(load case 4)
Max Uplift3=-66(load case 4), 2=-275(load case 4), 4=-45(load case 4)
Max Grav 3=99(load case 1), 2=292(load case 1), 4=70(load case 2)

FORCES (lb) - Maximum Compression/Maximum Tension
TOP CHORD 1-2=0/25, 2-3=-39/19
BOT CHORD 2-4=0/0

JOINT STRESS INDEX
2 = 0.15

NOTES (5)
1) Wind: ASCE 7-02; 110mph (3-second gust); h=16ft; TCDL=4.2psf; BCDL=3.0psf; Category II; Exp B; enclosed; MWFRS gable end zone and C-C Exterior(2) zone; porch left and right exposed; Lumber DOL=1.60 plate grip DOL=1.60. This truss is designed for C-C for members and forces, and for MWFRS for reactions specified.
2) *This truss has been designed for a 10.0 psf bottom chord live load nonconcurrent with any other live loads.
3) All bearings are assumed to be SYP No.2 crushing capacity of 565.00 psi
4) Provide mechanical connection (by others) of truss to bearing plate capable of withstanding 66 lb uplift at joint 3, 275 lb uplift at joint 2 and 45 lb uplift at joint 4.
5) Truss Design Engineer: Julius Lee, PE: Florida P.E. License No. 34869: Address: 1109 Coastal Bay Blvd. Boynton Beach, FL 33435

LOAD CASE(S) Standard

Job	Truss	Truss Type	Qty	Ply	ADAM'S FRAMING - DUDDING RES.
L283727	EJ7	MONO TRUSS	1	1	L283727008 Job Reference (optional)

Builders FirstSource, Lake City, Fl 32055

6.300 s Apr 19 2006 MiTek Industries, Inc. Wed Jul 23 08:55:31 2008 Page 1

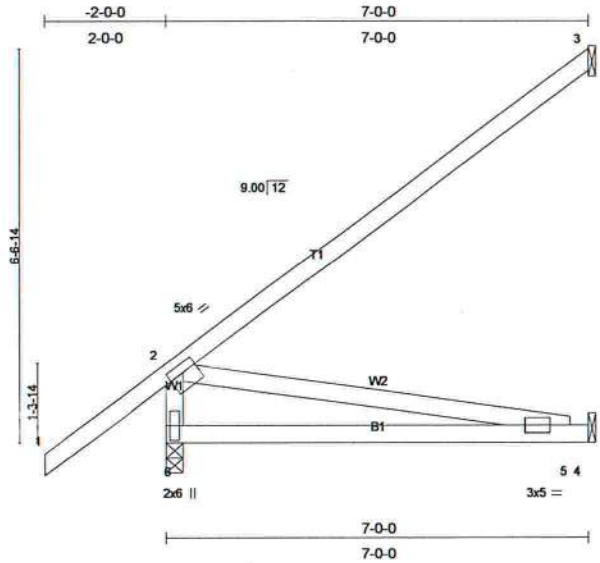

Plate Offsets (X,Y): [2:0-3-0,0-1-12]

LOADING (psf)		SPACING 2-0-0	CSI		DEFL	in	(loc)	l/defl	L/d	PLATES	GRIP
TCLL	20.0	Plates Increase 1.25	TC	0.54	Vert(LL)	-0.06	5-6	>999	360	MT20	244/190
TCDL	7.0	Lumber Increase 1.25	BC	0.30	Vert(TL)	-0.10	5-6	>779	240		
BCLL	10.0 *	Rep Stress Incr YES	WB	0.16	Horz(TL)	-0.01	3	n/a	n/a		
BCDL	5.0	Code FBC2004/TPI2002	(Matrix)							Weight: 38 lb	

LUMBER
TOP CHORD 2 X 4 SYP No.2
BOT CHORD 2 X 4 SYP No.2
WEBS 2 X 4 SYP No.3

BRACING
TOP CHORD Structural wood sheathing directly applied or 6-0-0 oc purlins, except end verticals.
BOT CHORD Rigid ceiling directly applied or 9-2-1 oc bracing.

REACTIONS (lb/size) 3=142/Mechanical, 6=352/0-3-8, 4=58/Mechanical
Max Horz 6=270(load case 6)
Max Uplift3=-109(load case 6), 6=-71(load case 6), 4=-30(load case 6)
Max Grav 3=142(load case 1), 6=352(load case 1), 4=108(load case 2)

FORCES (lb) - Maximum Compression/Maximum Tension
TOP CHORD 1-2=0/70, 2-3=-142/63, 2-6=-308/155
BOT CHORD 5-6=-476/196, 4-5=0/0
WEBS 2-5=-199/483

JOINT STRESS INDEX
2 = 0.78, 5 = 0.17 and 6 = 0.84

NOTES (5)
1) Wind: ASCE 7-02; 110mph (3-second gust); h=16ft; TCDL=4.2psf; BCDL=3.0psf; Category II; Exp B; enclosed; MWFRS and C-C Exterior(2) zone; end vertical left exposed; Lumber DOL=1.60 plate grip DOL=1.60. This truss is designed for C-C for members and forces, and for MWFRS for reactions specified.
2) *This truss has been designed for a 10.0 psf bottom chord live load nonconcurrent with any other live loads.
3) All bearings are assumed to be SYP No.2 crushing capacity of 565.00 psi
4) Provide mechanical connection (by others) of truss to bearing plate capable of withstanding 109 lb uplift at joint 3, 71 lb uplift at joint 6 and 30 lb uplift at joint 4.
5) Truss Design Engineer: Julius Lee, PE: Florida P.E. License No. 34869: Address: 1109 Coastal Bay Blvd. Boynton Beach, FL 33435

LOAD CASE(S) Standard

Job	Truss	Truss Type	Qty	Ply	ADAM'S FRAMING - DUDDING RES.
L283727	EJ7A	SPECIAL	4	1	L283727009 Job Reference (optional)

Builders FirstSource, Lake City, Fl 32055 — 6.300 s Apr 19 2006 MiTek Industries, Inc. Wed Jul 23 08:55:32 2008 Page 1

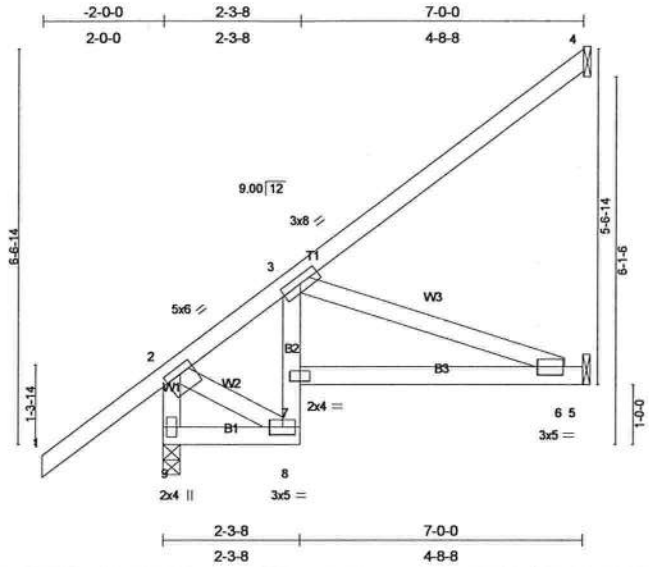

Plate Offsets (X,Y): [2:0-2-12,0-1-8]

LOADING (psf)		SPACING 2-0-0	CSI	DEFL in (loc) l/defl L/d	PLATES GRIP
TCLL 20.0		Plates Increase 1.25	TC 0.45	Vert(LL) -0.02 6-7 >999 360	MT20 244/190
TCDL 7.0		Lumber Increase 1.25	BC 0.39	Vert(TL) -0.04 6-7 >999 240	
BCLL 10.0	*	Rep Stress Incr YES	WB 0.11	Horz(TL) -0.02 5 n/a n/a	
BCDL 5.0		Code FBC2004/TPI2002	(Matrix)		Weight: 42 lb

LUMBER
TOP CHORD 2 X 4 SYP No.2
BOT CHORD 2 X 4 SYP No.2 *Except*
B2 2 X 4 SYP No.3
WEBS 2 X 4 SYP No.3

BRACING
TOP CHORD Structural wood sheathing directly applied or 6-0-0 oc purlins, except end verticals.
BOT CHORD Rigid ceiling directly applied or 6-0-0 oc bracing.

REACTIONS (lb/size) 4=102/Mechanical, 9=352/0-3-8, 5=97/Mechanical
Max Horz 9=270(load case 6)
Max Uplift4=-79(load case 6), 9=-71(load case 6), 5=-60(load case 6)
Max Grav 4=102(load case 1), 9=352(load case 1), 5=118(load case 2)

FORCES (lb) - Maximum Compression/Maximum Tension
TOP CHORD 1-2=0/70, 2-3=-177/13, 3-4=-103/46, 2-9=-370/205
BOT CHORD 8-9=-199/21, 7-8=-66/3, 3-7=-42/90, 6-7=-356/227, 5-6=0/0
WEBS 3-6=-241/377, 2-8=-9/216

JOINT STRESS INDEX
2 = 0.80, 3 = 0.58, 6 = 0.13, 7 = 0.75, 8 = 0.54 and 9 = 0.64

NOTES (5)
1) Wind: ASCE 7-02; 110mph (3-second gust); h=16ft; TCDL=4.2psf; BCDL=3.0psf; Category II; Exp B; enclosed; MWFRS and C-C Exterior(2) zone; end vertical left exposed; Lumber DOL=1.60 plate grip DOL=1.60. This truss is designed for C-C for members and forces, and for MWFRS for reactions specified.
2) *This truss has been designed for a 10.0 psf bottom chord live load nonconcurrent with any other live loads.
3) All bearings are assumed to be SYP No.2 crushing capacity of 565.00 psi
4) Provide mechanical connection (by others) of truss to bearing plate capable of withstanding 79 lb uplift at joint 4, 71 lb uplift at joint 9 and 60 lb uplift at joint 5.
5) Truss Design Engineer: Julius Lee, PE: Florida P.E. License No. 34869: Address: 1109 Coastal Bay Blvd. Boynton Beach, FL 33435

LOAD CASE(S) Standard

Job	Truss	Truss Type	Qty	Ply	ADAM'S FRAMING - DUDDING RES.
L283727	HJ6	JACK	1	1	L283727010 Job Reference (optional)

Builders FirstSource, Lake City, Fl 32055 — 6.300 s Apr 19 2006 MiTek Industries, Inc. Wed Jul 23 08:55:33 2008 Page 1

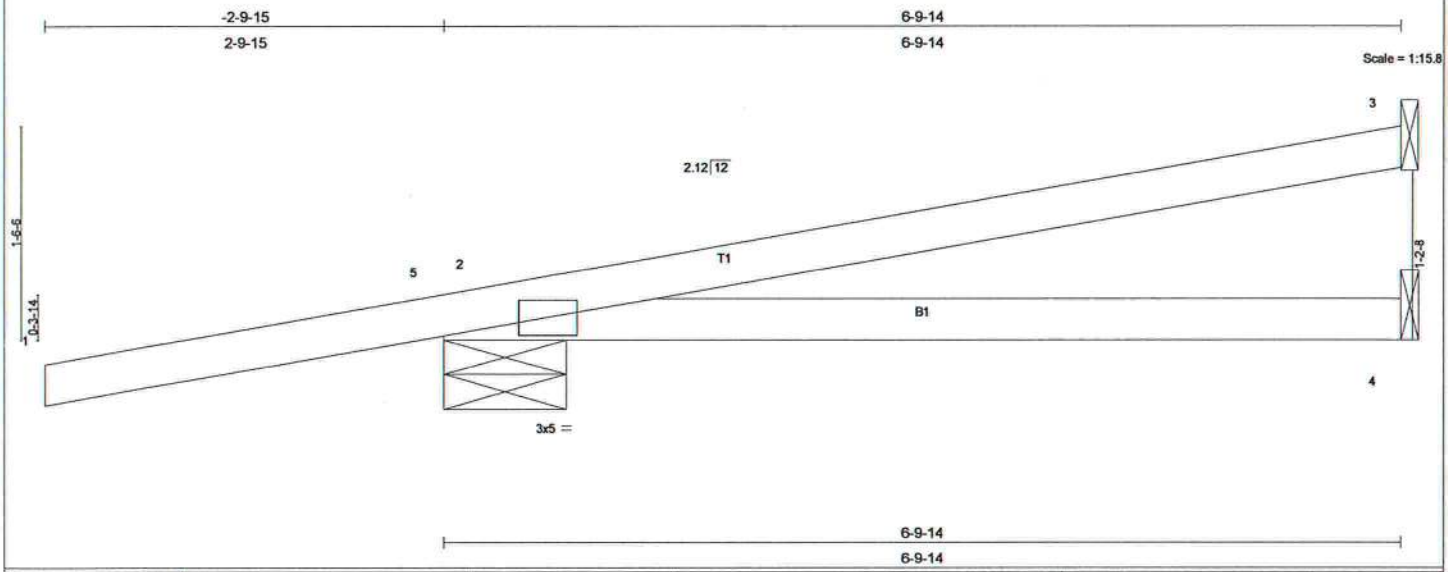

LOADING (psf)			SPACING 2-0-0	CSI		DEFL	in	(loc)	l/defl	L/d	PLATES	GRIP
TCLL	20.0		Plates Increase 1.25	TC	0.56	Vert(LL)	0.11	2-4	>687	360	MT20	244/190
TCDL	7.0		Lumber Increase 1.25	BC	0.31	Vert(TL)	-0.15	2-4	>515	240		
BCLL	10.0	*	Rep Stress Incr NO	WB	0.00	Horz(TL)	-0.00	3	n/a	n/a		
BCDL	5.0		Code FBC2004/TPI2002	(Matrix)							Weight: 25 lb	

LUMBER
TOP CHORD 2 X 4 SYP No.2
BOT CHORD 2 X 4 SYP No.2

BRACING
TOP CHORD Structural wood sheathing directly applied or 6-9-14 oc purlins.
BOT CHORD Rigid ceiling directly applied or 10-0-0 oc bracing.

REACTIONS (lb/size) 3=161/Mechanical, 2=324/0-10-9, 4=37/Mechanical
Max Horz 2=79(load case 3)
Max Uplift3=-104(load case 3), 2=-346(load case 3), 4=-58(load case 3)
Max Grav 3=161(load case 1), 2=324(load case 1), 4=102(load case 2)

FORCES (lb) - Maximum Compression/Maximum Tension
TOP CHORD 1-5=0/23, 2-5=0/23, 2-3=-28/20
BOT CHORD 2-4=0/0

JOINT STRESS INDEX
2 = 0.14

NOTES (6)
1) Wind: ASCE 7-02; 110mph (3-second gust); h=16ft; TCDL=4.2psf; BCDL=3.0psf; Category II; Exp B; enclosed; MWFRS gable end zone; porch left and right exposed; Lumber DOL=1.60 plate grip DOL=1.60.
2) *This truss has been designed for a 10.0 psf bottom chord live load nonconcurrent with any other live loads.
3) All bearings are assumed to be SYP No.2 crushing capacity of 565.00 psi
4) Provide mechanical connection (by others) of truss to bearing plate capable of withstanding 104 lb uplift at joint 3, 346 lb uplift at joint 2 and 58 lb uplift at joint 4.
5) In the LOAD CASE(S) section, loads applied to the face of the truss are noted as front (F) or back (B).
6) Truss Design Engineer: Julius Lee, PE: Florida P.E. License No. 34869: Address: 1109 Coastal Bay Blvd. Boynton Beach, FL 33435

LOAD CASE(S) Standard
1) Regular: Lumber Increase=1.25, Plate Increase=1.25
Uniform Loads (plf)
Vert: 1-5=-54
Trapezoidal Loads (plf)
Vert: 5=0(F=27, B=27)-to-3=-92(F=-19, B=-19), 2=-1(F=5, B=5)-to-4=-17(F=-4, B=-4)

Job	Truss	Truss Type	Qty	Ply	ADAM'S FRAMING - DUDDING RES.
L283727	HJ9	MONO TRUSS	1	1	L283727011 Job Reference (optional)

Builders FirstSource, Lake City, Fl 32055 — 6.300 s Apr 19 2006 MiTek Industries, Inc. Wed Jul 23 08:55:34 2008 Page 1

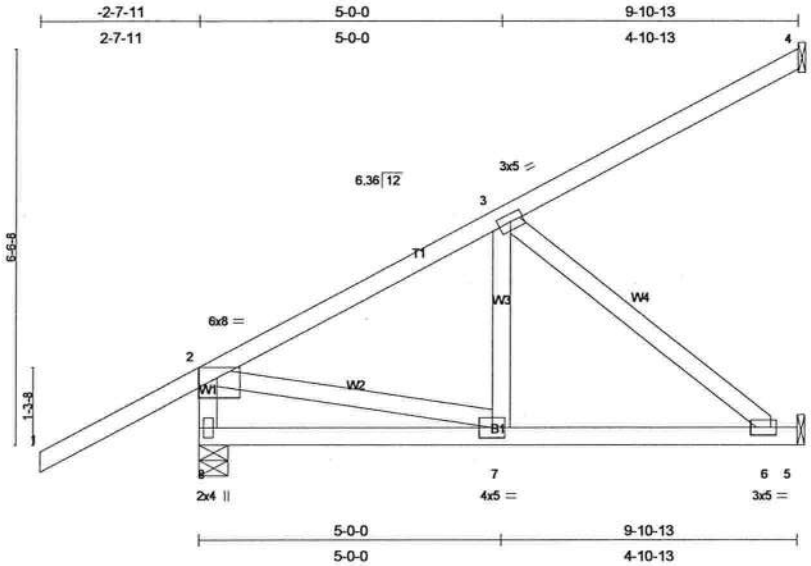

Plate Offsets (X,Y): [2:0-3-8,Edge]

LOADING (psf)		SPACING 2-0-0	CSI	DEFL in (loc) l/defl L/d	PLATES GRIP
TCLL 20.0		Plates Increase 1.25	TC 0.80	Vert(LL) 0.03 6-7 >999 360	MT20 244/190
TCDL 7.0		Lumber Increase 1.25	BC 0.26	Vert(TL) -0.07 6-7 >999 240	
BCLL 10.0	*	Rep Stress Incr NO	WB 0.23	Horz(TL) -0.01 4 n/a n/a	
BCDL 5.0		Code FBC2004/TPI2002	(Matrix)		Weight: 57 lb

LUMBER
TOP CHORD 2 X 4 SYP No.2
BOT CHORD 2 X 4 SYP No.2
WEBS 2 X 4 SYP No.3

BRACING
TOP CHORD Structural wood sheathing directly applied or 6-0-0 oc purlins, except end verticals.
BOT CHORD Rigid ceiling directly applied or 6-0-0 oc bracing.

REACTIONS (lb/size) 4=234/Mechanical, 8=434/0-5-11, 5=260/Mechanical
Max Horz 8=441(load case 5)
Max Uplift4=-272(load case 5), 8=-138(load case 5), 5=-178(load case 5)

FORCES (lb) - Maximum Compression/Maximum Tension
TOP CHORD 1-2=0/70, 2-3=-347/0, 3-4=-163/80, 2-8=-437/152
BOT CHORD 7-8=-158/36, 6-7=-278/293, 5-6=0/0
WEBS 3-7=0/159, 3-6=-378/358, 2-7=-137/462

JOINT STRESS INDEX
2 = 0.70, 3 = 0.20, 6 = 0.13, 7 = 0.23 and 8 = 0.45

NOTES (6)
1) Wind: ASCE 7-02; 110mph (3-second gust); h=16ft; TCDL=4.2psf; BCDL=3.0psf; Category II; Exp B; enclosed; MWFRS gable end zone; end vertical left exposed; Lumber DOL=1.60 plate grip DOL=1.60.
2) *This truss has been designed for a 10.0 psf bottom chord live load nonconcurrent with any other live loads.
3) All bearings are assumed to be SYP No.2 crushing capacity of 565.00 psi
4) Provide mechanical connection (by others) of truss to bearing plate capable of withstanding 272 lb uplift at joint 4, 138 lb uplift at joint 8 and 178 lb uplift at joint 5.
5) In the LOAD CASE(S) section, loads applied to the face of the truss are noted as front (F) or back (B).
6) Truss Design Engineer: Julius Lee, PE: Florida P.E. License No. 34869: Address: 1109 Coastal Bay Blvd. Boynton Beach, FL 33435

LOAD CASE(S) Standard
1) Regular: Lumber Increase=1.25, Plate Increase=1.25
Uniform Loads (plf)
Vert: 1-2=-54
Trapezoidal Loads (plf)
Vert: 2=-2(F=26, B=26)-to-4=-134(F=-40, B=-40), 8=0(F=5, B=5)-to-5=-25(F=-7, B=-7)

Job	Truss	Truss Type	Qty	Ply	ADAM'S FRAMING - DUDDING RES.
L283727	HJ9A	SPECIAL	1	1	L283727012 Job Reference (optional)

Builders FirstSource, Lake City, Fl 32055 — 6.300 s Apr 19 2006 MiTek Industries, Inc. Wed Jul 23 08:55:35 2008 Page 1

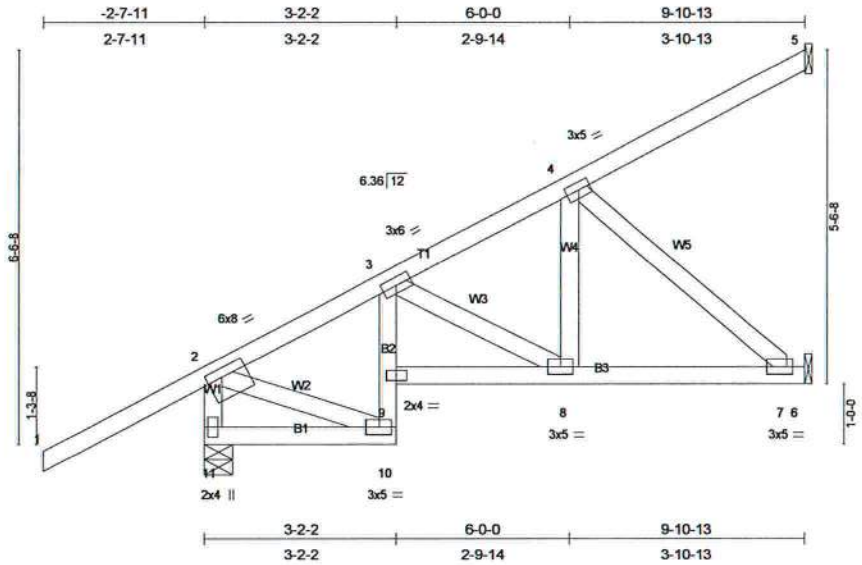

Plate Offsets (X,Y): [2:0-3-0,0-1-12]

LOADING (psf)		SPACING	2-0-0	CSI		DEFL	in	(loc)	l/defl	L/d	PLATES	GRIP
TCLL	20.0	Plates Increase	1.25	TC	0.59	Vert(LL)	0.03	8-9	>999	360	MT20	244/190
TCDL	7.0	Lumber Increase	1.25	BC	0.53	Vert(TL)	-0.03	7-8	>999	240		
BCLL	10.0 *	Rep Stress Incr	NO	WB	0.19	Horz(TL)	-0.03	6	n/a	n/a		
BCDL	5.0	Code FBC2004/TPI2002		(Matrix)							Weight: 60 lb	

LUMBER
TOP CHORD 2 X 4 SYP No.2
BOT CHORD 2 X 4 SYP No.2 *Except*
B2 2 X 4 SYP No.3
WEBS 2 X 4 SYP No.3

BRACING
TOP CHORD Structural wood sheathing directly applied or 6-0-0 oc purlins, except end verticals.
BOT CHORD Rigid ceiling directly applied or 6-0-0 oc bracing.

REACTIONS (lb/size) 5=188/Mechanical, 11=434/0-5-11, 6=305/Mechanical
Max Horz 11=441(load case 5)
Max Uplift5=-219(load case 5), 11=-138(load case 5), 6=-231(load case 5)

FORCES (lb) - Maximum Compression/Maximum Tension
TOP CHORD 1-2=0/70, 2-3=-274/0, 3-4=-389/27, 4-5=-133/65, 2-11=-463/190
BOT CHORD 10-11=-200/0, 9-10=-87/0, 3-9=-106/6, 8-9=-337/298, 7-8=-313/335, 6-7=0/0
WEBS 3-8=-93/42, 4-8=-24/199, 4-7=-446/417, 2-10=-55/366

JOINT STRESS INDEX
2 = 0.79, 3 = 0.61, 4 = 0.24, 7 = 0.17, 8 = 0.15, 9 = 0.72, 10 = 0.43 and 11 = 0.67

NOTES (6)
1) Wind: ASCE 7-02; 110mph (3-second gust); h=16ft; TCDL=4.2psf; BCDL=3.0psf; Category II; Exp B; enclosed; MWFRS gable end zone; end vertical left exposed; Lumber DOL=1.60 plate grip DOL=1.60.
2) *This truss has been designed for a 10.0 psf bottom chord live load nonconcurrent with any other live loads.
3) All bearings are assumed to be SYP No.2 crushing capacity of 565.00 psi
4) Provide mechanical connection (by others) of truss to bearing plate capable of withstanding 219 lb uplift at joint 5, 138 lb uplift at joint 11 and 231 lb uplift at joint 6.
5) In the LOAD CASE(S) section, loads applied to the face of the truss are noted as front (F) or back (B).
6) Truss Design Engineer: Julius Lee, PE: Florida P.E. License No. 34869: Address: 1109 Coastal Bay Blvd. Boynton Beach, FL 33435

LOAD CASE(S) Standard
1) Regular: Lumber Increase=1.25, Plate Increase=1.25
Uniform Loads (plf)
Vert: 1-2=-54
Trapezoidal Loads (plf)
Vert: 2=-2(F=26, B=26)-to-5=-134(F=-40, B=-40), 11=0(F=5, B=5)-to-10=-7(F=1, B=1), 9=-7(F=1, B=1)-to-6=-25(F=-7, B=-7)

Job	Truss	Truss Type	Qty	Ply	ADAM'S FRAMING - DUDDING RES.
L283727	PB01	PIGGYBACK 3x5 =	15	1	L283727013 Job Reference (optional)

Builders FirstSource, Lake City, Fl 32055 — 6.300 s Apr 19 2006 MiTek Industries, Inc. Wed Jul 23 08:55:36 2008 Page 1

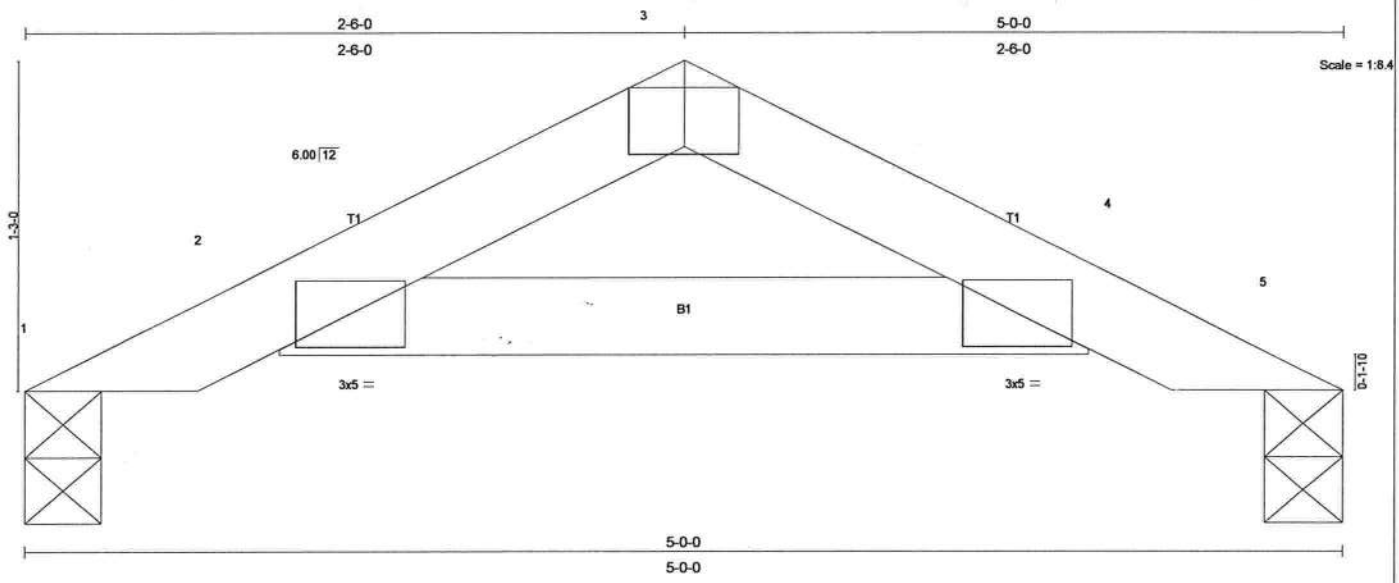

Plate Offsets (X,Y): [3:0-2-8,Edge]

LOADING (psf)		SPACING	2-0-0	CSI		DEFL	in	(loc)	l/defl	L/d	PLATES	GRIP
TCLL	20.0	Plates Increase	1.25	TC	0.19	Vert(LL)	0.02	2-4	>999	360	MT20	244/190
TCDL	7.0	Lumber Increase	1.25	BC	0.11	Vert(TL)	-0.03	2-4	>999	240		
BCLL	10.0 *	Rep Stress Incr	YES	WB	0.00	Horz(TL)	0.02	5	n/a	n/a		
BCDL	5.0	Code FBC2004/TPI2002		(Matrix)							Weight: 13 lb	

LUMBER
TOP CHORD 2 X 4 SYP No.2
BOT CHORD 2 X 4 SYP No.2

BRACING
TOP CHORD Structural wood sheathing directly applied or 5-0-0 oc purlins.
BOT CHORD Rigid ceiling directly applied or 10-0-0 oc bracing.

REACTIONS (lb/size) 1=151/0-3-8, 5=151/0-3-8
Max Horz 1=-15(load case 4)
Max Uplift1=-32(load case 6), 5=-32(load case 7)

FORCES (lb) - Maximum Compression/Maximum Tension
TOP CHORD 1-2=-60/58, 2-3=-244/209, 3-4=-244/209, 4-5=-60/58
BOT CHORD 2-4=-154/232

JOINT STRESS INDEX
2 = 0.25, 3 = 0.19 and 4 = 0.25

NOTES (8)
1) Unbalanced roof live loads have been considered for this design.
2) Wind: ASCE 7-02; 110mph (3-second gust); h=16ft; TCDL=4.2psf; BCDL=3.0psf; Category II; Exp B; enclosed; MWFRS and C-C Exterior(2) zone; Lumber DOL=1.60 plate grip DOL=1.60. This truss is designed for C-C for members and forces, and for MWFRS for reactions specified.
3) *This truss has been designed for a 10.0 psf bottom chord live load nonconcurrent with any other live loads.
4) All bearings are assumed to be SYP No.2 crushing capacity of 565.00 psi
5) Bearing at joint(s) 1, 5 considers parallel to grain value using ANSI/TPI 1 angle to grain formula. Building designer should verify capacity of bearing surface.
6) Provide mechanical connection (by others) of truss to bearing plate capable of withstanding 32 lb uplift at joint 1 and 32 lb uplift at joint 5.
7) SEE MiTek STANDARD PIGGYBACK TRUSS CONNECTION DETAIL FOR CONNECTION TO BASE TRUSS
8) Truss Design Engineer: Julius Lee, PE: Florida P.E. License No. 34869: Address: 1109 Coastal Bay Blvd. Boynton Beach, FL 33435

LOAD CASE(S) Standard

Job	Truss	Truss Type	Qty	Ply	ADAM'S FRAMING - DUDDING RES.
L283727	PB01G	PIGGYBACK 3x5 =	2	1	L283727014 Job Reference (optional)

Builders FirstSource, Lake City, Fl 32055 — 6.300 s Apr 19 2006 MiTek Industries, Inc. Wed Jul 23 08:55:36 2008 Page 1

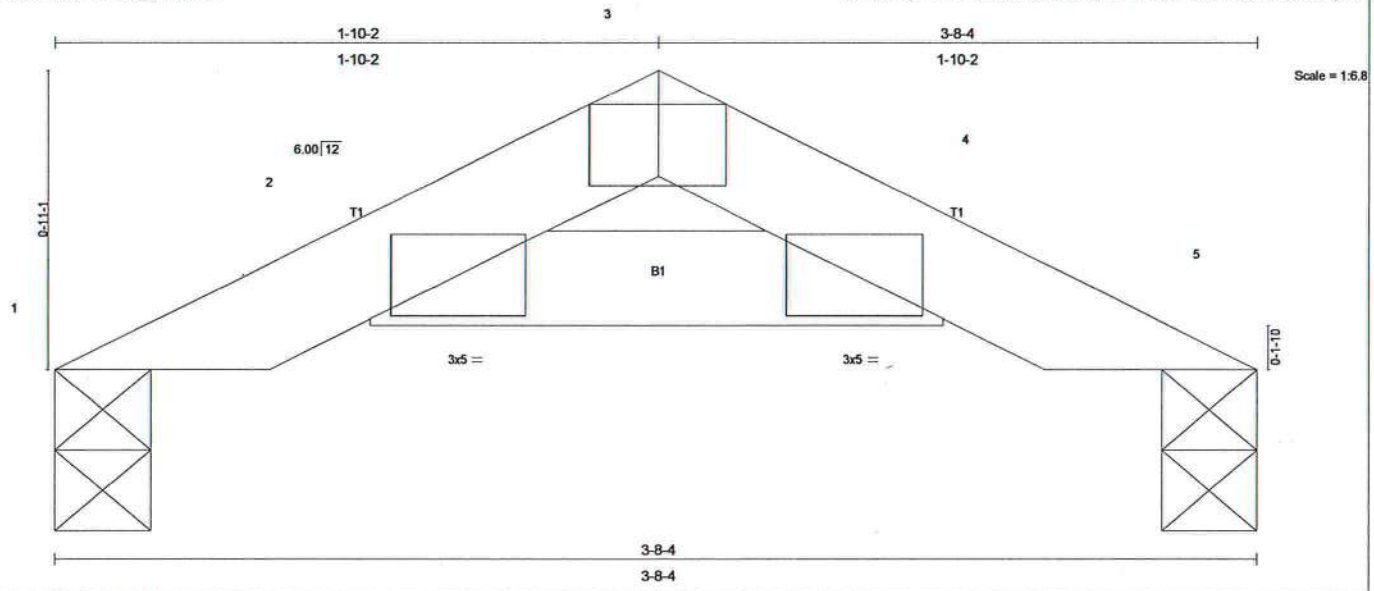

Plate Offsets (X,Y): [3:0-2-8,Edge]

LOADING (psf)		SPACING 2-0-0	CSI	DEFL in (loc) l/defl L/d	PLATES GRIP
TCLL 20.0		Plates Increase 1.25	TC 0.15	Vert(LL) -0.01 2-4 >999 360	MT20 244/190
TCDL 7.0		Lumber Increase 1.25	BC 0.09	Vert(TL) -0.01 2-4 >999 240	
BCLL 10.0	*	Rep Stress Incr YES	WB 0.00	Horz(TL) 0.01 5 n/a n/a	
BCDL 5.0		Code FBC2004/TPI2002	(Matrix)		Weight: 9 lb

LUMBER
TOP CHORD 2 X 4 SYP No.2
BOT CHORD 2 X 4 SYP No.2

BRACING
TOP CHORD Structural wood sheathing directly applied or 3-8-4 oc purlins.
BOT CHORD Rigid ceiling directly applied or 10-0-0 oc bracing.

REACTIONS (lb/size) 1=117/0-3-8, 5=117/0-3-8
Max Horz 1=-13(load case 4)
Max Uplift1=-49(load case 6), 5=-49(load case 7)

FORCES (lb) - Maximum Compression/Maximum Tension
TOP CHORD 1-2=-46/47, 2-3=-201/166, 3-4=-201/166, 4-5=-46/47
BOT CHORD 2-4=-126/203

JOINT STRESS INDEX
2 = 0.24, 3 = 0.09 and 4 = 0.24

NOTES (8)
1) Unbalanced roof live loads have been considered for this design.
2) Wind: ASCE 7-02; 110mph (3-second gust); h=16ft; TCDL=4.2psf; BCDL=3.0psf; Category II; Exp B; enclosed; MWFRS gable end zone and C-C Exterior(2) zone; Lumber DOL=1.60 plate grip DOL=1.60. This truss is designed for C-C for members and forces, and for MWFRS for reactions specified.
3) *This truss has been designed for a 10.0 psf bottom chord live load nonconcurrent with any other live loads.
4) All bearings are assumed to be SYP No.2 crushing capacity of 565.00 psi
5) Bearing at joint(s) 1, 5 considers parallel to grain value using ANSI/TPI 1 angle to grain formula. Building designer should verify capacity of bearing surface.
6) Provide mechanical connection (by others) of truss to bearing plate capable of withstanding 49 lb uplift at joint 1 and 49 lb uplift at joint 5.
7) SEE MiTek STANDARD PIGGYBACK TRUSS CONNECTION DETAIL FOR CONNECTION TO BASE TRUSS
8) Truss Design Engineer: Julius Lee, PE: Florida P.E. License No. 34869: Address: 1109 Coastal Bay Blvd. Boynton Beach, FL 33435

LOAD CASE(S) Standard

Job	Truss	Truss Type	Qty	Ply	ADAM'S FRAMING - DUDDING RES.
L283727	T01G	GABLE	1	1	L283727015 Job Reference (optional)

Builders FirstSource, Lake City, Fl 32055 — 6.300 s Apr 19 2006 MiTek Industries, Inc. Wed Jul 23 08:55:38 2008 Page 1

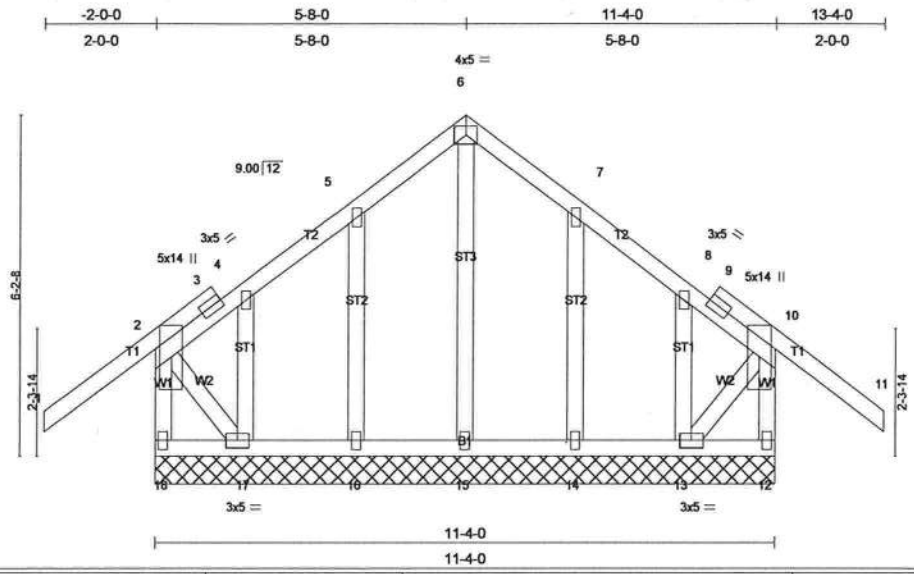

LOADING (psf)		SPACING 2-0-0	CSI	DEFL in (loc) l/defl L/d	PLATES GRIP
TCLL 20.0		Plates Increase 1.25	TC 0.29	Vert(LL) -0.03 11 n/r 120	MT20 244/190
TCDL 7.0		Lumber Increase 1.25	BC 0.04	Vert(TL) -0.04 11 n/r 90	
BCLL 10.0	*	Rep Stress Incr YES	WB 0.08	Horz(TL) 0.00 12 n/a n/a	
BCDL 5.0		Code FBC2004/TPI2002	(Matrix)		Weight: 89 lb

LUMBER
TOP CHORD 2 X 4 SYP No.2
BOT CHORD 2 X 4 SYP No.2
WEBS 2 X 4 SYP No.3
OTHERS 2 X 4 SYP No.3

BRACING
TOP CHORD Structural wood sheathing directly applied or 6-0-0 oc purlins, except end verticals.
BOT CHORD Rigid ceiling directly applied or 6-0-0 oc bracing.

REACTIONS (lb/size) 18=210/11-4-0, 12=210/11-4-0, 15=146/11-4-0, 16=136/11-4-0, 17=51/11-4-0, 14=136/11-4-0, 13=51/11-4-0
Max Horz 18=242(load case 5)
Max Uplift18=-171(load case 4), 12=-118(load case 5), 16=-116(load case 6), 17=-204(load case 5), 14=-115(load case 7), 13=-172(load case 4)
Max Grav 18=221(load case 10), 12=221(load case 11), 15=146(load case 1), 16=139(load case 10), 17=145(load case 4), 14=139(load case 11), 13=113(load case 5)

FORCES (lb) - Maximum Compression/Maximum Tension
TOP CHORD 1-2=0/63, 2-3=-81/94, 3-4=-75/102, 4-5=-56/91, 5-6=-24/165, 6-7=-24/165, 7-8=-21/79, 8-9=-41/71, 9-10=-47/60, 10-11=0/63, 2-18=-217/168, 10-12=-217/118
BOT CHORD 17-18=-204/224, 16-17=-63/197, 15-16=-63/197, 14-15=-63/197, 13-14=-63/197, 12-13=-15/68
WEBS 6-15=-125/0, 5-16=-120/132, 4-17=-36/41, 7-14=-120/131, 8-13=-38/40, 2-17=-116/225, 10-13=-77/207

JOINT STRESS INDEX
2 = 0.49, 3 = 0.00, 3 = 0.27, 4 = 0.02, 5 = 0.07, 6 = 0.15, 7 = 0.07, 8 = 0.02, 9 = 0.00, 9 = 0.27, 10 = 0.49, 12 = 0.25, 13 = 0.13, 14 = 0.08, 15 = 0.05, 16 = 0.08, 17 = 0.13 and 18 = 0.25

NOTES (11)
1) Unbalanced roof live loads have been considered for this design.
2) Wind: ASCE 7-02; 110mph (3-second gust); h=16ft; TCDL=4.2psf; BCDL=3.0psf; Category II; Exp B; enclosed; MWFRS gable end zone and C-C Exterior(2) zone; end vertical left and right exposed; Lumber DOL=1.60 plate grip DOL=1.60. This truss is designed for C-C for members and forces, and for MWFRS for reactions specified.
3) Truss designed for wind loads in the plane of the truss only. For studs exposed to wind (normal to the face), see MiTek "Standard Gable End Detail"
4) *This truss has been designed for a 10.0 psf bottom chord live load nonconcurrent with any other live loads.
5) All plates are 2x4 MT20 unless otherwise indicated.
6) Gable requires continuous bottom chord bearing.
7) Truss to be fully sheathed from one face or securely braced against lateral movement (i.e. diagonal web).
8) Gable studs spaced at 2-0-0 oc.
9) All bearings are assumed to be SYP No.2 crushing capacity of 565.00 psi
10) Provide mechanical connection (by others) of truss to bearing plate capable of withstanding 171 lb uplift at joint 18, 118 lb uplift at joint 12, 116 lb uplift at joint 16, 204 lb uplift at joint 17, 115 lb uplift at joint 14 and 172 lb uplift at joint 13.
11) Truss Design Engineer: Julius Lee, PE: Florida P.E. License No. 34869: Address: 1109 Coastal Bay Blvd. Boynton Beach, FL 33435

LOAD CASE(S) Standard

Job	Truss	Truss Type	Qty	Ply	ADAM'S FRAMING - DUDDING RES.
L283727	T02	ATTIC	4	1	L283727016 Job Reference (optional)

Builders FirstSource, Lake City, Fl 32055 — 6.300 s Apr 19 2006 MiTek Industries, Inc. Wed Jul 23 08:55:39 2008 Page 1

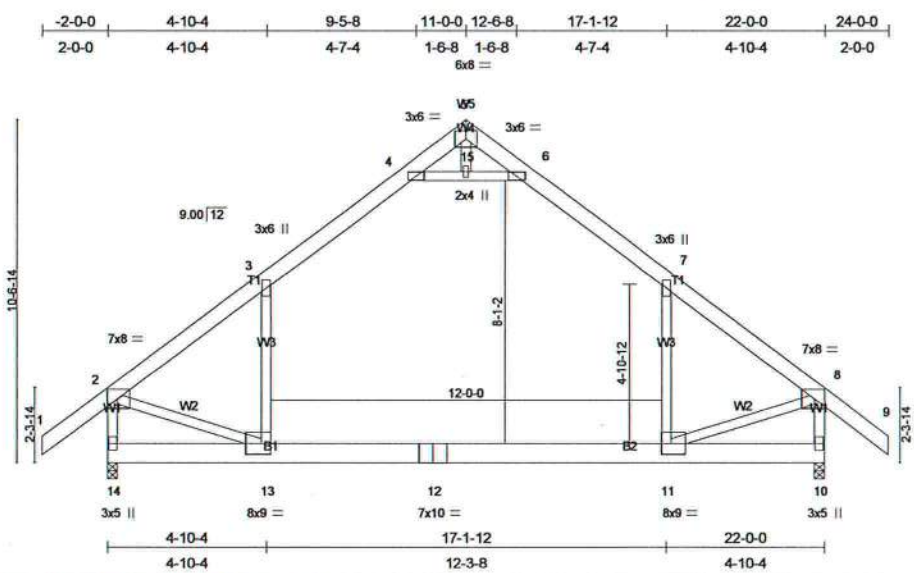

Plate Offsets (X,Y): [2:0-3-8,0-3-8], [8:0-3-8,0-3-8], [11:0-3-8,0-4-0], [13:0-3-8,0-4-0]

LOADING (psf)		SPACING 2-0-0	CSI	DEFL in (loc) l/defl L/d	PLATES GRIP
TCLL 20.0		Plates Increase 1.25	TC 0.95	Vert(LL) -0.45 11-13 >576 360	MT20 244/190
TCDL 7.0		Lumber Increase 1.25	BC 0.54	Vert(TL) -0.75 11-13 >349 240	
BCLL 10.0	*	Rep Stress Incr YES	WB 0.54	Horz(TL) 0.01 10 n/a n/a	
BCDL 5.0		Code FBC2004/TPI2002	(Matrix)		Weight: 184 lb

LUMBER
TOP CHORD 2 X 6 SYP No.1D
BOT CHORD 2 X 8 SYP No.1D
WEBS 2 X 4 SYP No.3

BRACING
TOP CHORD Structural wood sheathing directly applied or 2-2-0 oc purlins, except end verticals.
BOT CHORD Rigid ceiling directly applied or 10-0-0 oc bracing.

REACTIONS (lb/size) 14=1540/0-3-8, 10=1540/0-3-8
Max Horz 14=-298(load case 4)
Max Uplift14=-61(load case 6), 10=-61(load case 7)

FORCES (lb) - Maximum Compression/Maximum Tension
TOP CHORD 1-2=0/70, 2-3=-1551/119, 3-4=-1066/258, 4-5=-50/773, 5-6=-50/773, 6-7=-1066/258, 7-8=-1551/119, 8-9=0/70, 2-14=-1658/246, 8-10=-1658/246
BOT CHORD 13-14=-292/363, 12-13=0/1038, 11-12=0/1038, 10-11=0/178
WEBS 4-15=-2036/397, 6-15=-2036/397, 3-13=-1/642, 7-11=-0/642, 2-13=-11/934, 5-15=-8/144, 8-11=-14/934

JOINT STRESS INDEX
2 = 0.69, 3 = 0.24, 4 = 0.70, 5 = 0.84, 6 = 0.70, 7 = 0.24, 8 = 0.69, 10 = 0.42, 11 = 0.17, 12 = 0.73, 13 = 0.17, 14 = 0.42 and 15 = 0.34

NOTES (8)
1) Unbalanced roof live loads have been considered for this design.
2) Wind: ASCE 7-02; 110mph (3-second gust); h=16ft; TCDL=4.2psf; BCDL=3.0psf; Category II; Exp B; enclosed; MWFRS and C-C Exterior(2) zone; end vertical left and right exposed; Lumber DOL=1.60 plate grip DOL=1.60. This truss is designed for C-C for members and forces, and for MWFRS for reactions specified.
3) *This truss has been designed for a 10.0 psf bottom chord live load nonconcurrent with any other live loads.
4) Ceiling dead load (5.0 psf) on member(s). 3-4, 6-7, 4-15, 6-15; Wall dead load (5.0psf) on member(s).3-13, 7-11
5) Bottom chord live load (40.0 psf) and additional bottom chord dead load (10.0 psf) applied only to room. 11-13
6) All bearings are assumed to be SYP No.2 crushing capacity of 565.00 psi
7) Provide mechanical connection (by others) of truss to bearing plate capable of withstanding 61 lb uplift at joint 14 and 61 lb uplift at joint 10.
8) Truss Design Engineer: Julius Lee, PE: Florida P.E. License No. 34869: Address: 1109 Coastal Bay Blvd. Boynton Beach, FL 33435

LOAD CASE(S) Standard

Job	Truss	Truss Type	Qty	Ply	ADAM'S FRAMING - DUDDING RES.
L283727	T02G	GABLE	1	1	L283727017 Job Reference (optional)

Builders FirstSource, Lake City, Fl 32055 — 6.300 s Apr 19 2006 MiTek Industries, Inc. Wed Jul 23 08:55:41 2008 Page 1

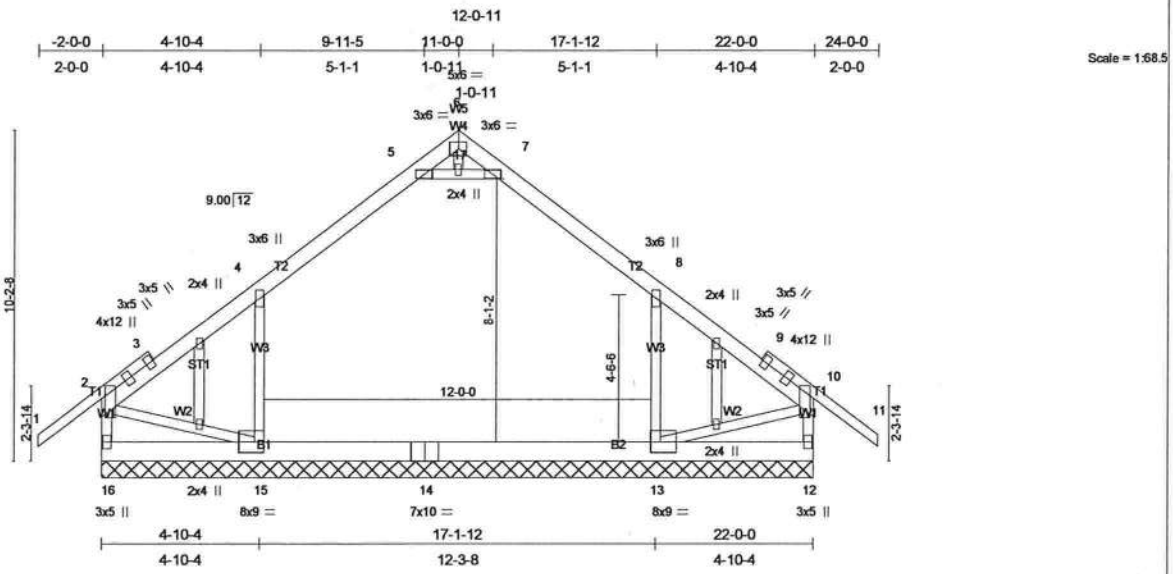

Plate Offsets (X,Y): [2:0-8-12,0-1-8], [10:0-8-12,0-1-8], [13:0-3-6,0-4-0], [15:0-3-6,0-4-0]

LOADING (psf)		SPACING 2-0-0	CSI	DEFL in (loc) l/defl L/d	PLATES GRIP
TCLL 20.0		Plates Increase 1.25	TC 0.35	Vert(LL) -0.03 10-11 n/r 120	MT20 244/190
TCDL 7.0		Lumber Increase 1.25	BC 0.14	Vert(TL) -0.04 10-11 n/r 90	
BCLL 10.0	*	Rep Stress Incr NO	WB 0.21	Horz(TL) 0.00 13 n/a n/a	
BCDL 5.0		Code FBC2004/TPI2002	(Matrix)		Weight: 189 lb

LUMBER
TOP CHORD 2 X 6 SYP No.1D *Except*
T1 2 X 4 SYP No.2, T1 2 X 4 SYP No.2
BOT CHORD 2 X 8 SYP No.1D
WEBS 2 X 4 SYP No.3
OTHERS 2 X 4 SYP No.3

BRACING
TOP CHORD Structural wood sheathing directly applied or 6-0-0 oc purlins, except end verticals.
BOT CHORD Rigid ceiling directly applied or 6-0-0 oc bracing.

REACTIONS (lb/size) 16=789/22-0-0, 15=458/22-0-0, 13=458/22-0-0, 12=789/22-0-0
Max Horz 16=368(load case 5)
Max Uplift16=-204(load case 6), 15=-301(load case 6), 13=-300(load case 7), 12=-206(load case 7)
Max Grav 16=789(load case 1), 15=510(load case 11), 13=510(load case 12), 12=789(load case 1)

FORCES (lb) - Maximum Compression/Maximum Tension
TOP CHORD 1-2=-4/88, 2-3=-594/121, 3-4=-407/128, 4-5=-657/253, 5-6=-102/33, 6-7=-102/39, 7-8=-657/253, 8-9=-407/135, 9-10=-594/135, 10-11=-4/88, 2-16=-778/258, 10-12=-778/258
BOT CHORD 15-16=-329/346, 14-15=-120/411, 13-14=-120/411, 12-13=-18/60
WEBS 5-17=-383/338, 7-17=-383/338, 4-15=-525/309, 8-13=-525/307, 2-15=-94/447, 6-17=-17/46, 10-13=-112/447

JOINT STRESS INDEX
2 = 0.93, 3 = 0.00, 3 = 0.50, 3 = 0.50, 4 = 0.17, 5 = 0.16, 6 = 0.21, 7 = 0.16, 8 = 0.17, 9 = 0.00, 9 = 0.50, 9 = 0.50, 10 = 0.93, 12 = 0.18, 13 = 0.11, 14 = 0.12, 15 = 0.11, 16 = 0.18, 17 = 0.34, 18 = 0.34, 19 = 0.34, 20 = 0.34 and 21 = 0.34

NOTES (11)
1) Unbalanced roof live loads have been considered for this design.
2) Wind: ASCE 7-02; 110mph (3-second gust); h=16ft; TCDL=4.2psf; BCDL=3.0psf; Category II; Exp B; enclosed; MWFRS gable end zone and C-C Exterior(2) zone; end vertical left and right exposed; Lumber DOL=1.60 plate grip DOL=1.60. This truss is designed for C-C for members and forces, and for MWFRS for reactions specified.
3) Truss designed for wind loads in the plane of the truss only. For studs exposed to wind (normal to the face), see MiTek "Standard Gable End Detail"
4) *This truss has been designed for a 10.0 psf bottom chord live load nonconcurrent with any other live loads.
5) Gable requires continuous bottom chord bearing.
6) Gable studs spaced at 2-0-0 oc.
7) Ceiling dead load (5.0 psf) on member(s). 4-5, 7-8, 5-17, 7-17; Wall dead load (5.0psf) on member(s).4-15, 8-13
8) All bearings are assumed to be SYP No.2 crushing capacity of 565.00 psi
9) Provide mechanical connection (by others) of truss to bearing plate capable of withstanding 204 lb uplift at joint 16, 301 lb uplift at joint 15, 300 lb uplift at joint 13 and 206 lb uplift at joint 12.
10) In the LOAD CASE(S) section, loads applied to the face of the truss are noted as front (F) or back (B).
11) Truss Design Engineer: Julius Lee, PE: Florida P.E. License No. 34869: Address: 1109 Coastal Bay Blvd. Boynton Beach, FL 33435

LOAD CASE(S) Standard
1) Regular: Lumber Increase=1.25, Plate Increase=1.25
Uniform Loads (plf)
Vert: 12-16=-10, 1-2=-79(F=-25), 2-4=-79(F=-25), 4-5=-89(F=-25), 5-6=-79(F=-25), 6-7=-79(F=-25), 7-8=-89(F=-25), 8-10=-79(F=-25), 10-11=-79(F=-25), 5-7=-10
Drag: 4-15=-10, 8-13=-10

Job	Truss	Truss Type	Qty	Ply	ADAM'S FRAMING - DUDDING RES.
L283727	T03	ATTIC	7	1	L283727018 Job Reference (optional)

Builders FirstSource, Lake City, Fl 32055

6.300 s Apr 19 2006 MiTek Industries, Inc. Wed Jul 23 08:55:42 2008 Page 1

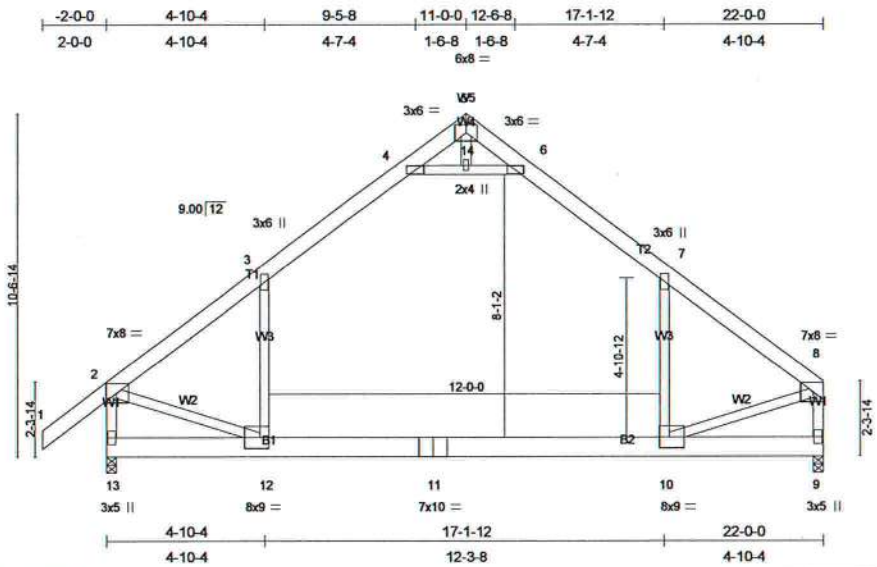

Plate Offsets (X,Y): [2:0-3-8,0-3-8], [10:0-3-8,0-4-0], [12:0-3-8,0-4-0]

LOADING (psf)			SPACING 2-0-0	CSI		DEFL	in	(loc)	l/defl	L/d	PLATES	GRIP
TCLL	20.0		Plates Increase 1.25	TC	0.92	Vert(LL)	-0.46	10-12	>571	360	MT20	244/190
TCDL	7.0		Lumber Increase 1.25	BC	0.54	Vert(TL)	-0.75	10-12	>346	240		
BCLL	10.0	*	Rep Stress Incr YES	WB	0.55	Horz(TL)	0.01	9	n/a	n/a		
BCDL	5.0		Code FBC2004/TPI2002	(Matrix)							Weight: 178 lb	

LUMBER
TOP CHORD 2 X 6 SYP No.1D
BOT CHORD 2 X 8 SYP No.1D
WEBS 2 X 4 SYP No.3 *Except*
W1 2 X 4 SYP No.2, W1 2 X 4 SYP No.2

BRACING
TOP CHORD Structural wood sheathing directly applied or 2-2-0 oc purlins, except end verticals.
BOT CHORD Rigid ceiling directly applied or 10-0-0 oc bracing.

REACTIONS (lb/size) 13=1546/0-3-8, 9=1419/0-3-8
Max Horz 13=331(load case 5)
Max Uplift13=-60(load case 6)

FORCES (lb) - Maximum Compression/Maximum Tension
TOP CHORD 1-2=0/70, 2-3=-1565/121, 3-4=-1073/258, 4-5=-57/775, 5-6=-56/784, 6-7=-1072/260, 7-8=-1558/104, 2-13=-1670/249, 8-9=-1524/107
BOT CHORD 12-13=-326/338, 11-12=0/1046, 10-11=0/1046, 9-10=-34/236
WEBS 4-14=-2059/406, 6-14=-2059/406, 3-12=0/653, 7-10=0/645, 2-12=-16/934, 5-14=-9/145, 8-10=-34/883

JOINT STRESS INDEX
2 = 0.80, 3 = 0.24, 4 = 0.71, 5 = 0.84, 6 = 0.71, 7 = 0.24, 8 = 0.80, 9 = 0.51, 10 = 0.17, 11 = 0.73, 12 = 0.17, 13 = 0.51 and 14 = 0.34

NOTES (8)
1) Unbalanced roof live loads have been considered for this design.
2) Wind: ASCE 7-02; 110mph (3-second gust); h=16ft; TCDL=4.2psf; BCDL=3.0psf; Category II; Exp B; enclosed; MWFRS and C-C Exterior(2) zone; end vertical left and right exposed; Lumber DOL=1.60 plate grip DOL=1.60. This truss is designed for C-C for members and forces, and for MWFRS for reactions specified.
3) *This truss has been designed for a 10.0 psf bottom chord live load nonconcurrent with any other live loads.
4) Ceiling dead load (5.0 psf) on member(s). 3-4, 6-7, 4-14, 6-14; Wall dead load (5.0psf) on member(s).3-12, 7-10
5) Bottom chord live load (40.0 psf) and additional bottom chord dead load (10.0 psf) applied only to room. 10-12
6) All bearings are assumed to be SYP No.2 crushing capacity of 565.00 psi
7) Provide mechanical connection (by others) of truss to bearing plate capable of withstanding 60 lb uplift at joint 13.
8) Truss Design Engineer: Julius Lee, PE: Florida P.E. License No. 34869: Address: 1109 Coastal Bay Blvd. Boynton Beach, FL 33435

LOAD CASE(S) Standard

Job	Truss	Truss Type	Qty	Ply	ADAM'S FRAMING - DUDDING RES.
L283727	T04	SPECIAL	1	1	L283727019 Job Reference (optional)

Builders FirstSource, Lake City, Fl 32055 — 6.300 s Apr 19 2006 MiTek Industries, Inc. Wed Jul 23 08:55:43 2008 Page 1

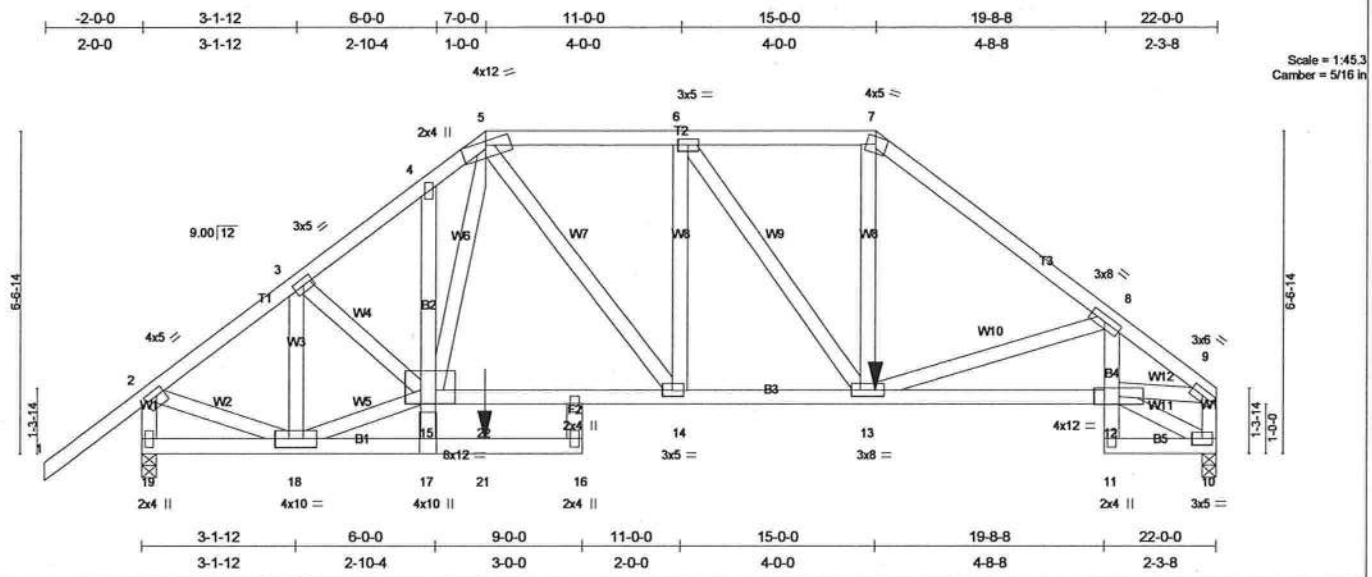

Plate Offsets (X,Y): [2:0-2-0,0-1-8], [15:0-4-12,0-3-6]

LOADING (psf)			SPACING	2-0-0	CSI		DEFL	in	(loc)	l/defl	L/d	PLATES	GRIP
TCLL	20.0		Plates Increase	1.25	TC	0.42	Vert(LL)	0.32	16	>814	360	MT20	244/190
TCDL	7.0		Lumber Increase	1.25	BC	0.89	Vert(TL)	-0.51	16	>510	240		
BCLL	10.0	*	Rep Stress Incr	NO	WB	0.55	Horz(TL)	0.11	10	n/a	n/a		
BCDL	5.0		Code FBC2004/TPI2002		(Matrix)							Weight: 165 lb	

LUMBER
TOP CHORD 2 X 4 SYP No.2
BOT CHORD 2 X 4 SYP No.2 *Except*
B1 2 X 4 SYP No.1D, B4 2 X 4 SYP No.3
WEBS 2 X 4 SYP No.3

BRACING
TOP CHORD Structural wood sheathing directly applied or 4-0-10 oc purlins, except end verticals.
BOT CHORD Rigid ceiling directly applied or 6-0-0 oc bracing.
JOINTS 1 Brace at Jt(s): 15

REACTIONS (lb/size) 19=1566/0-3-8, 10=1416/0-3-8
Max Horz 19=218(load case 4)
Max Uplift19=-748(load case 5), 10=-660(load case 6)

FORCES (lb) - Maximum Compression/Maximum Tension
TOP CHORD 1-2=0/70, 2-3=-1513/725, 3-4=-2242/1180, 4-5=-2114/1150, 5-6=-1820/1007, 6-7=-1613/900, 7-8=-2057/1054, 8-9=-2283/1064, 2-19=-1511/742, 9-10=-1379/641
BOT CHORD 18-19=-216/156, 17-18=-361/174, 17-21=0/0, 16-21=0/0, 15-17=-340/591, 4-15=-130/132, 15-22=-936/1610, 14-22=-936/1610, 13-14=-1031/1819, 12-13=-840/1878, 11-12=0/22, 8-12=-15/154, 10-11=-52/91
WEBS 3-18=-1100/594, 15-18=-909/1610, 3-15=-419/786, 5-15=-329/640, 5-14=-289/394, 6-14=-212/292, 6-13=-426/275, 7-13=-460/813, 8-13=-301/158, 2-18=-529/1212, 9-12=-784/1728, 10-12=-36/47

JOINT STRESS INDEX
2 = 0.75, 3 = 0.57, 4 = 0.53, 5 = 0.86, 6 = 0.42, 7 = 0.71, 8 = 0.67, 9 = 0.82, 10 = 0.53, 11 = 0.34, 12 = 0.58, 13 = 0.58, 14 = 0.41, 15 = 0.43, 16 = 0.34, 17 = 0.74, 18 = 0.73, 19 = 0.71 and 20 = 0.34

NOTES (10)
1) Unbalanced roof live loads have been considered for this design.
2) Wind: ASCE 7-02; 110mph (3-second gust); h=16ft; TCDL=4.2psf; BCDL=3.0psf; Category II; Exp B; enclosed; MWFRS; end vertical left and right exposed; Lumber DOL=1.60 plate grip DOL=1.60.
3) Provide adequate drainage to prevent water ponding.
4) *This truss has been designed for a 10.0 psf bottom chord live load nonconcurrent with any other live loads.
5) All bearings are assumed to be SYP No.2 crushing capacity of 565.00 psi
6) Provide mechanical connection (by others) of truss to bearing plate capable of withstanding 748 lb uplift at joint 19 and 660 lb uplift at joint 10.
7) Girder carries hip end with 7-0-0 end setback.
8) Hanger(s) or other connection device(s) shall be provided sufficient to support concentrated load(s) 411 lb down and 318 lb up at 15-0-0, and 411 lb down and 318 lb up at 7-0-0 on bottom chord. The design/selection of such connection device(s) is the responsibility of others.
9) In the LOAD CASE(S) section, loads applied to the face of the truss are noted as front (F) or back (B).
10) Truss Design Engineer: Julius Lee, PE: Florida P.E. License No. 34869: Address: 1109 Coastal Bay Blvd. Boynton Beach, FL 33435

LOAD CASE(S) Standard
1) Regular: Lumber Increase=1.25, Plate Increase=1.25
Uniform Loads (plf)
Vert: 1-2=-54, 2-5=-54, 5-7=-118(F=-64), 7-9=-54, 17-19=-10, 17-21=-10, 16-21=-22(F=-12), 15-22=-10, 13-22=-22(F=-12), 12-13=-10, 10-11=-10
Concentrated Loads (lb)
Vert: 13=-411(F) 21=-411(F)

Job	Truss	Truss Type	Qty	Ply	ADAM'S FRAMING - DUDDING RES.
L283727	T05	SPECIAL	1	1	L283727020 Job Reference (optional)

Builders FirstSource, Lake City, Fl 32055 — 6.300 s Apr 19 2006 MiTek Industries, Inc. Wed Jul 23 08:55:44 2008 Page 1

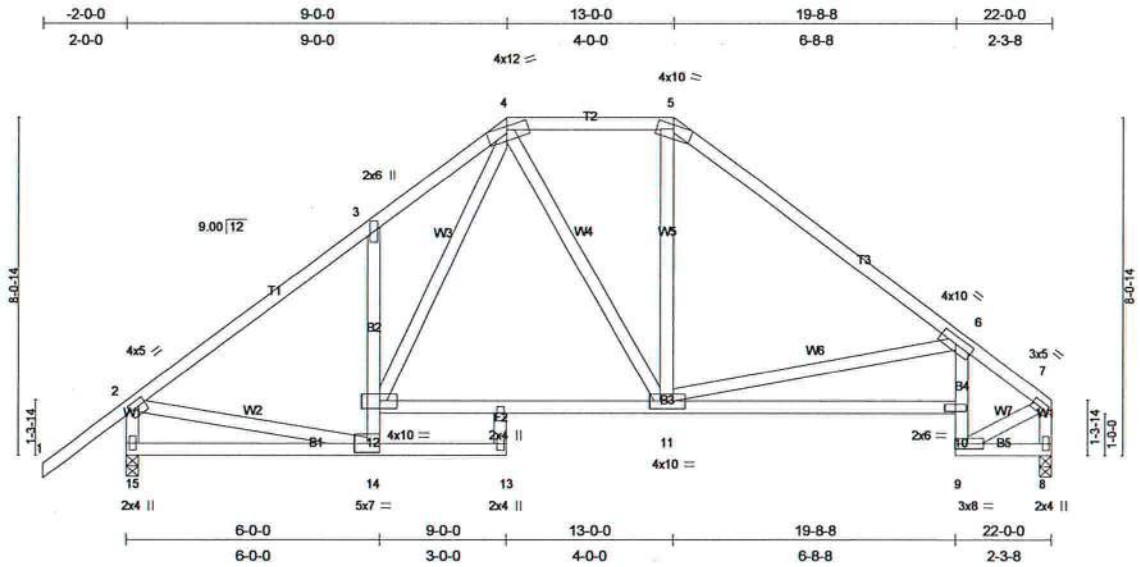

Plate Offsets (X,Y): [2:0-2-0,0-1-12]

LOADING (psf)			SPACING	2-0-0	CSI		DEFL	in	(loc)	l/defl	L/d	PLATES	GRIP
TCLL	20.0		Plates Increase	1.25	TC	0.33	Vert(LL)	-0.24	13	>999	360	MT20	244/190
TCDL	7.0		Lumber Increase	1.25	BC	0.77	Vert(TL)	-0.54	13	>482	240		
BCLL	10.0	*	Rep Stress Incr	YES	WB	0.29	Horz(TL)	0.19	8	n/a	n/a		
BCDL	5.0		Code FBC2004/TPI2002		(Matrix)							Weight: 148 lb	

LUMBER
TOP CHORD 2 X 4 SYP No.2
BOT CHORD 2 X 4 SYP No.2
WEBS 2 X 4 SYP No.3

BRACING
TOP CHORD Structural wood sheathing directly applied or 6-0-0 oc purlins, except end verticals.
BOT CHORD Rigid ceiling directly applied or 6-0-0 oc bracing.

REACTIONS (lb/size) 15=837/0-3-8, 8=699/0-3-8
Max Horz 15=260(load case 5)
Max Uplift15=-212(load case 6), 8=-125(load case 7)

FORCES (lb) - Maximum Compression/Maximum Tension
TOP CHORD 1-2=0/70, 2-3=-860/368, 3-4=-916/555, 4-5=-587/409, 5-6=-845/393, 6-7=-732/346, 2-15=-861/466, 7-8=-795/355
BOT CHORD 14-15=-249/238, 13-14=0/0, 12-14=-2/147, 3-12=-302/282, 11-12=-155/537, 10-11=-381/882, 9-10=-183/106, 6-10=-172/133, 8-9=-10/34
WEBS 4-12=-227/372, 4-11=-115/170, 5-11=-39/244, 6-11=-321/313, 2-14=-113/598, 7-9=-282/619

JOINT STRESS INDEX
2 = 0.66, 3 = 0.53, 4 = 0.35, 5 = 0.73, 6 = 0.70, 7 = 0.52, 8 = 0.41, 9 = 0.63, 10 = 0.66, 11 = 0.38, 12 = 0.54, 13 = 0.34, 14 = 0.75, 15 = 0.58 and 16 = 0.34

NOTES (7)
1) Unbalanced roof live loads have been considered for this design.
2) Wind: ASCE 7-02; 110mph (3-second gust); h=16ft; TCDL=4.2psf; BCDL=3.0psf; Category II; Exp B; enclosed; MWFRS and C-C Exterior(2) zone; end vertical left and right exposed; Lumber DOL=1.60 plate grip DOL=1.60. This truss is designed for C-C for members and forces, and for MWFRS for reactions specified.
3) Provide adequate drainage to prevent water ponding.
4) *This truss has been designed for a 10.0 psf bottom chord live load nonconcurrent with any other live loads.
5) All bearings are assumed to be SYP No.2 crushing capacity of 565.00 psi
6) Provide mechanical connection (by others) of truss to bearing plate capable of withstanding 212 lb uplift at joint 15 and 125 lb uplift at joint 8.
7) Truss Design Engineer: Julius Lee, PE: Florida P.E. License No. 34869: Address: 1109 Coastal Bay Blvd. Boynton Beach, FL 33435

LOAD CASE(S) Standard

Job	Truss	Truss Type	Qty	Ply	ADAM'S FRAMING - DUDDING RES.
L283727	T06	SPECIAL	3	1	L283727021 Job Reference (optional)

Builders FirstSource, Lake City, Fl 32055 — 6.300 s Apr 19 2006 MiTek Industries, Inc. Wed Jul 23 08:55:45 2008 Page 1

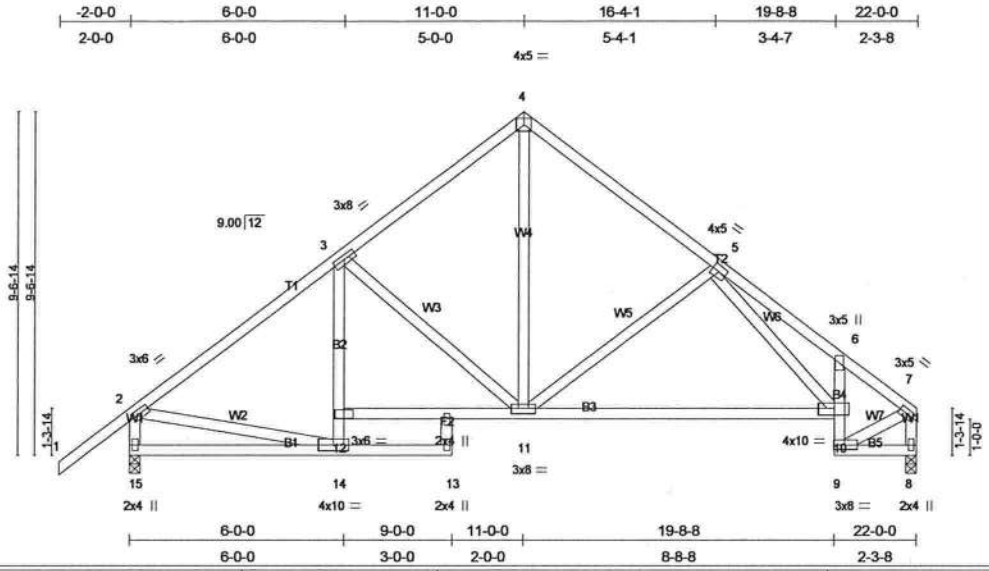

LOADING (psf)			SPACING	2-0-0	CSI		DEFL	in	(loc)	l/defl	L/d	PLATES	GRIP
TCLL	20.0		Plates Increase	1.25	TC	0.31	Vert(LL)	-0.22	13	>999	360	MT20	244/190
TCDL	7.0		Lumber Increase	1.25	BC	0.81	Vert(TL)	-0.49	13	>534	240		
BCLL	10.0	*	Rep Stress Incr	YES	WB	0.30	Horz(TL)	0.18	8	n/a	n/a		
BCDL	5.0		Code FBC2004/TPI2002		(Matrix)							Weight: 147 lb	

LUMBER
TOP CHORD 2 X 4 SYP No.2
BOT CHORD 2 X 4 SYP No.2
WEBS 2 X 4 SYP No.3

BRACING
TOP CHORD Structural wood sheathing directly applied or 6-0-0 oc purlins, except end verticals.
BOT CHORD Rigid ceiling directly applied or 10-0-0 oc bracing, Except:
6-0-0 oc bracing: 9-10.
JOINTS 1 Brace at Jt(s): 12

REACTIONS (lb/size) 15=837/0-3-8, 8=699/0-3-8
Max Horz 15=301(load case 5)
Max Uplift15=-218(load case 6), 8=-131(load case 7)

FORCES (lb) - Maximum Compression/Maximum Tension
TOP CHORD 1-2=0/70, 2-3=-858/359, 3-4=-700/389, 4-5=-702/382, 5-6=-1011/479, 6-7=-727/328, 2-15=-856/459, 7-8=-796/341
BOT CHORD 14-15=-280/270, 13-14=0/0, 12-14=-6/141, 3-12=-40/149, 11-12=-191/671, 10-11=-192/697, 9-10=-150/74, 6-10=-231/150, 8-9=-2/29
WEBS 3-11=-265/203, 4-11=-255/502, 5-11=-272/255, 5-10=-56/271, 2-14=-113/601, 7-9=-204/550

JOINT STRESS INDEX
2 = 0.64, 3 = 0.75, 4 = 0.69, 5 = 0.32, 6 = 0.70, 7 = 0.77, 8 = 0.39, 9 = 0.63, 10 = 0.46, 11 = 0.57, 12 = 0.78, 13 = 0.34, 14 = 0.85, 15 = 0.52 and 16 = 0.34

NOTES (6)
1) Unbalanced roof live loads have been considered for this design.
2) Wind: ASCE 7-02; 110mph (3-second gust); h=16ft; TCDL=4.2psf; BCDL=3.0psf; Category II; Exp B; enclosed; MWFRS and C-C Exterior(2) zone; end vertical left and right exposed; Lumber DOL=1.60 plate grip DOL=1.60. This truss is designed for C-C for members and forces, and for MWFRS for reactions specified.
3) *This truss has been designed for a 10.0 psf bottom chord live load nonconcurrent with any other live loads.
4) All bearings are assumed to be SYP No.2 crushing capacity of 565.00 psi
5) Provide mechanical connection (by others) of truss to bearing plate capable of withstanding 218 lb uplift at joint 15 and 131 lb uplift at joint 8.
6) Truss Design Engineer: Julius Lee, PE: Florida P.E. License No. 34869: Address: 1109 Coastal Bay Blvd. Boynton Beach, FL 33435

LOAD CASE(S) Standard

Job	Truss	Truss Type	Qty	Ply	ADAM'S FRAMING - DUDDING RES.
L283727	T07	COMMON	1	1	L283727022
					Job Reference (optional)

Builders FirstSource, Lake City, Fl 32055 — 6.300 s Apr 19 2006 MiTek Industries, Inc. Wed Jul 23 08:55:46 2008 Page 1

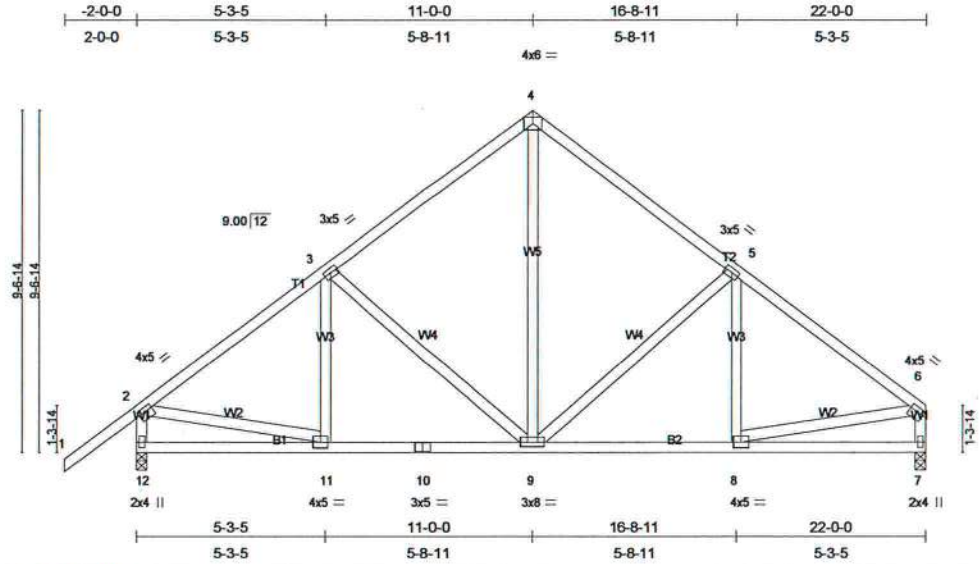

Plate Offsets (X,Y): [2:0-1-12,0-1-8], [6:Edge,0-1-8]

LOADING (psf)		SPACING 2-0-0	CSI	DEFL in (loc) l/defl L/d	PLATES GRIP
TCLL 20.0		Plates Increase 1.25	TC 0.35	Vert(LL) -0.02 9-11 >999 360	MT20 244/190
TCDL 7.0		Lumber Increase 1.25	BC 0.18	Vert(TL) -0.05 8-9 >999 240	
BCLL 10.0	*	Rep Stress Incr YES	WB 0.37	Horz(TL) 0.01 7 n/a n/a	
BCDL 5.0		Code FBC2004/TPI2002	(Matrix)		Weight: 144 lb

LUMBER
TOP CHORD 2 X 4 SYP No.2
BOT CHORD 2 X 4 SYP No.2
WEBS 2 X 4 SYP No.3

BRACING
TOP CHORD Structural wood sheathing directly applied or 6-0-0 oc purlins, except end verticals.
BOT CHORD Rigid ceiling directly applied or 10-0-0 oc bracing.

REACTIONS (lb/size) 12=816/0-3-8, 7=689/0-3-8
Max Horz 12=301(load case 5)
Max Uplift12=-231(load case 6), 7=-137(load case 7)

FORCES (lb) - Maximum Compression/Maximum Tension
TOP CHORD 1-2=0/70, 2-3=-782/367, 3-4=-616/392, 4-5=-617/393, 5-6=-796/376, 2-12=-788/460, 6-7=-659/322
BOT CHORD 11-12=-276/284, 10-11=-192/559, 9-10=-192/559, 8-9=-167/573, 7-8=-74/126
WEBS 3-11=-65/91, 3-9=-215/205, 4-9=-245/353, 5-9=-233/221, 5-8=-49/95, 2-11=-155/541, 6-8=-95/457

JOINT STRESS INDEX
2 = 0.69, 3 = 0.52, 4 = 0.57, 5 = 0.52, 6 = 0.69, 7 = 0.63, 8 = 0.32, 9 = 0.57, 10 = 0.26, 11 = 0.32 and 12 = 0.63

NOTES (6)
1) Unbalanced roof live loads have been considered for this design.
2) Wind: ASCE 7-02; 110mph (3-second gust); h=16ft; TCDL=4.2psf; BCDL=3.0psf; Category II; Exp B; enclosed; MWFRS and C-C Exterior(2) zone; end vertical left and right exposed; Lumber DOL=1.60 plate grip DOL=1.60. This truss is designed for C-C for members and forces, and for MWFRS for reactions specified.
3) *This truss has been designed for a 10.0 psf bottom chord live load nonconcurrent with any other live loads.
4) All bearings are assumed to be SYP No.2 crushing capacity of 565.00 psi
5) Provide mechanical connection (by others) of truss to bearing plate capable of withstanding 231 lb uplift at joint 12 and 137 lb uplift at joint 7.
6) Truss Design Engineer: Julius Lee, PE: Florida P.E. License No. 34869: Address: 1109 Coastal Bay Blvd. Boynton Beach, FL 33435

LOAD CASE(S) Standard

Job	Truss	Truss Type	Qty	Ply	ADAM'S FRAMING - DUDDING RES.
L283727	T08	MONO TRUSS	7	1	L283727023
					Job Reference (optional)

Builders FirstSource, Lake City, Fl 32055 — 6.300 s Apr 19 2006 MiTek Industries, Inc. Wed Jul 23 08:55:47 2008 Page 1

Scale = 1:56.0

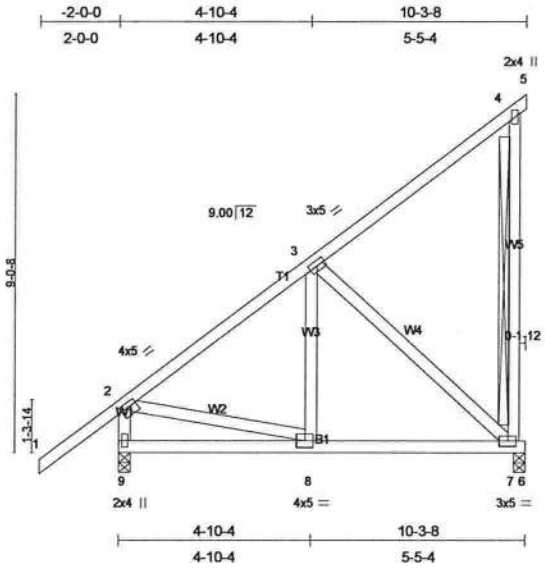

Plate Offsets (X,Y): [2:0-1-12,0-1-8]

LOADING (psf)		SPACING 2-0-0	CSI	DEFL in (loc) l/defl L/d	PLATES GRIP
TCLL 20.0		Plates Increase 1.25	TC 0.33	Vert(LL) -0.02 7-8 >999 360	MT20 244/190
TCDL 7.0		Lumber Increase 1.25	BC 0.12	Vert(TL) -0.03 7-8 >999 240	
BCLL 10.0	*	Rep Stress Incr YES	WB 0.20	Horz(TL) -0.00 7 n/a n/a	
BCDL 5.0		Code FBC2004/TPI2002	(Matrix)		Weight: 75 lb

LUMBER
TOP CHORD 2 X 4 SYP No.2
BOT CHORD 2 X 4 SYP No.2
WEBS 2 X 4 SYP No.3

BRACING
TOP CHORD Structural wood sheathing directly applied or 6-0-0 oc purlins, except end verticals.
BOT CHORD Rigid ceiling directly applied or 6-0-0 oc bracing.
WEBS T-Brace: 2 X 4 SYP No.3 - 4-7
Fasten T and I braces to narrow edge of web with 10d Common wire nails, 9in o.c. ,with 4in minimum end distance.
Brace must cover 90% of web length.

REACTIONS (lb/size) 7=310/0-3-8, 9=444/0-3-8
Max Horz 9=350(load case 6)
Max Uplift7=-205(load case 6), 9=-63(load case 6)

FORCES (lb) - Maximum Compression/Maximum Tension
TOP CHORD 1-2=0/70, 2-3=-302/0, 3-4=-104/63, 4-5=-2/0, 4-7=-122/139, 2-9=-420/147
BOT CHORD 8-9=-355/52, 7-8=-217/184, 6-7=0/0
WEBS 3-8=0/139, 3-7=-234/280, 2-8=0/198

JOINT STRESS INDEX
2 = 0.80, 3 = 0.16, 4 = 0.70, 7 = 0.21, 8 = 0.10 and 9 = 0.39

NOTES (5)
1) Wind: ASCE 7-02; 110mph (3-second gust); h=16ft; TCDL=4.2psf; BCDL=3.0psf; Category II; Exp B; enclosed; MWFRS and C-C Exterior(2) zone; end vertical left exposed; Lumber DOL=1.60 plate grip DOL=1.60. This truss is designed for C-C for members and forces, and for MWFRS for reactions specified.
2) *This truss has been designed for a 10.0 psf bottom chord live load nonconcurrent with any other live loads.
3) All bearings are assumed to be SYP No.2 crushing capacity of 565.00 psi
4) Provide mechanical connection (by others) of truss to bearing plate capable of withstanding 205 lb uplift at joint 7 and 63 lb uplift at joint 9.
5) Truss Design Engineer: Julius Lee, PE: Florida P.E. License No. 34869: Address: 1109 Coastal Bay Blvd. Boynton Beach, FL 33435

LOAD CASE(S) Standard

Job	Truss	Truss Type	Qty	Ply	ADAM'S FRAMING - DUDDING RES.
L283727	T09	SPECIAL	4	1	L283727024 Job Reference (optional)

Builders FirstSource, Lake City, Fl 32055

6.300 s Apr 19 2006 MiTek Industries, Inc. Wed Jul 23 08:55:48 2008 Page 1

8-0-0	15-11-15	18-9-0	26-0-0	32-6-0	34-6-0
8-0-0	7-11-15	2-9-1	7-3-0	6-6-0	2-0-0

Scale = 1:57.1
Camber = 1/8 in

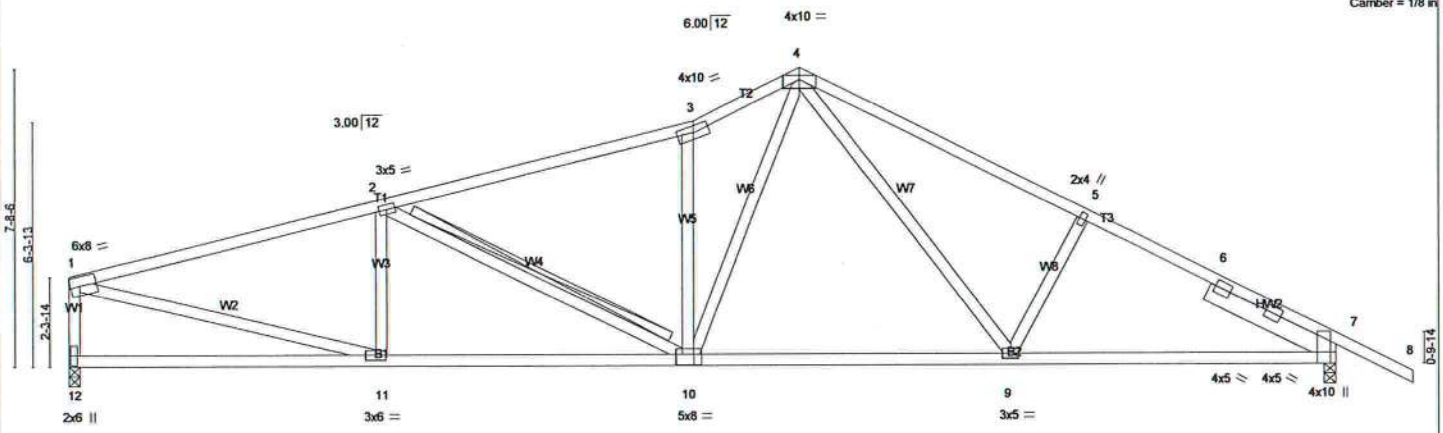

8-0-0	15-11-15	24-2-0	32-6-0
8-0-0	7-11-15	8-2-1	8-4-0

Plate Offsets (X,Y): [7:0-5-15,Edge], [10:0-2-8,0-3-4]

LOADING (psf)			SPACING	2-0-0	CSI		DEFL	in	(loc)	l/defl	L/d	PLATES	GRIP
TCLL	20.0		Plates Increase	1.25	TC	0.86	Vert(LL)	0.14	10-11	>999	360	MT20	244/190
TCDL	7.0		Lumber Increase	1.25	BC	0.44	Vert(TL)	-0.25	9-10	>999	240		
BCLL	10.0	*	Rep Stress Incr	YES	WB	0.96	Horz(TL)	0.06	7	n/a	n/a		
BCDL	5.0		Code FBC2004/TPI2002		(Matrix)							Weight: 184 lb	

LUMBER
TOP CHORD 2 X 4 SYP No.2
BOT CHORD 2 X 4 SYP No.2
WEBS 2 X 4 SYP No.3
SLIDER Right 2 X 6 SYP No.1D 3-7-13

BRACING
TOP CHORD Structural wood sheathing directly applied or 4-4-1 oc purlins, except end verticals.
BOT CHORD Rigid ceiling directly applied or 7-2-11 oc bracing.
WEBS T-Brace: 2 X 4 SYP No.3 - 2-10
Fasten T and I braces to narrow edge of web with 10d Common wire nails, 9in o.c. ,with 4in minimum end distance.
Brace must cover 90% of web length.

REACTIONS (lb/size) 12=1032/0-3-8, 7=1147/0-3-8
Max Horz 12=-154(load case 7)
Max Uplift12=-244(load case 6), 7=-299(load case 7)

FORCES (lb) - Maximum Compression/Maximum Tension
TOP CHORD 1-2=-1705/985, 2-3=-1524/934, 3-4=-1632/1102, 4-5=-1571/996, 5-6=-1653/971, 6-7=-1727/946, 7-8=0/26, 1-12=-984/605
BOT CHORD 11-12=-58/152, 10-11=-756/1607, 9-10=-416/1125, 7-9=-687/1438
WEBS 2-11=-316/270, 2-10=-289/176, 3-10=-616/458, 4-10=-532/888, 4-9=-240/388, 5-9=-267/283, 1-11=-835/1504

JOINT STRESS INDEX
1 = 0.71, 2 = 0.44, 3 = 0.71, 4 = 0.58, 5 = 0.34, 6 = 0.00, 7 = 0.89, 7 = 0.39, 7 = 0.39, 9 = 0.46, 10 = 0.78, 11 = 0.84 and 12 = 0.84

NOTES (6)
1) Unbalanced roof live loads have been considered for this design.
2) Wind: ASCE 7-02; 110mph (3-second gust); h=16ft; TCDL=4.2psf; BCDL=3.0psf; Category II; Exp B; enclosed; MWFRS and C-C Exterior(2) zone; end vertical right exposed; Lumber DOL=1.60 plate grip DOL=1.60. This truss is designed for C-C for members and forces, and for MWFRS for reactions specified.
3) *This truss has been designed for a 10.0 psf bottom chord live load nonconcurrent with any other live loads.
4) All bearings are assumed to be SYP No.2 crushing capacity of 565.00 psi
5) Provide mechanical connection (by others) of truss to bearing plate capable of withstanding 244 lb uplift at joint 12 and 299 lb uplift at joint 7.
6) Truss Design Engineer: Julius Lee, PE: Florida P.E. License No. 34869: Address: 1109 Coastal Bay Blvd. Boynton Beach, FL 33435

LOAD CASE(S) Standard

Job	Truss	Truss Type	Qty	Ply	ADAM'S FRAMING - DUDDING RES.
L283727	T10	SPECIAL	4	1	L283727025 Job Reference (optional)

Builders FirstSource, Lake City, Fl 32055 — 6.300 s Apr 19 2006 MiTek Industries, Inc. Wed Jul 23 08:55:49 2008 Page 1

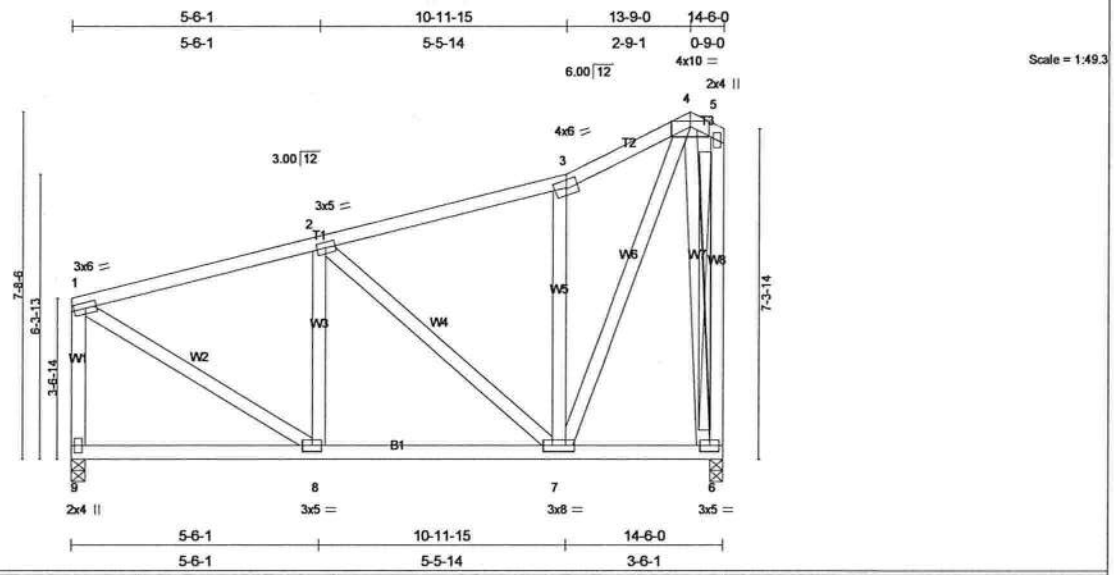

LOADING (psf)		SPACING	2-0-0	CSI		DEFL	in	(loc)	l/defl	L/d	PLATES	GRIP
TCLL	20.0	Plates Increase	1.25	TC	0.30	Vert(LL)	-0.02	8-9	>999	360	MT20	244/190
TCDL	7.0	Lumber Increase	1.25	BC	0.15	Vert(TL)	-0.03	7-8	>999	240		
BCLL	10.0 *	Rep Stress Incr	YES	WB	0.43	Horz(TL)	-0.01	6	n/a	n/a		
BCDL	5.0	Code FBC2004/TPI2002		(Matrix)							Weight: 115 lb	

LUMBER
TOP CHORD 2 X 4 SYP No.2
BOT CHORD 2 X 4 SYP No.2
WEBS 2 X 4 SYP No.3

BRACING
TOP CHORD Structural wood sheathing directly applied or 6-0-0 oc purlins, except end verticals.
BOT CHORD Rigid ceiling directly applied or 10-0-0 oc bracing.
WEBS T-Brace: 2 X 4 SYP No.3 - 5-6
Fasten T and I braces to narrow edge of web with 10d Common wire nails, 9in o.c. ,with 4in minimum end distance.
Brace must cover 90% of web length.

REACTIONS (lb/size) 9=455/0-3-8, 6=455/0-3-8
Max Horz 9=125(load case 6)
Max Uplift9=-86(load case 4), 6=-165(load case 6)

FORCES (lb) - Maximum Compression/Maximum Tension
TOP CHORD 1-2=-406/173, 2-3=-260/86, 3-4=-298/192, 4-5=-31/24, 1-9=-425/216, 5-6=-61/42
BOT CHORD 8-9=-224/34, 7-8=-333/363, 6-7=-29/35
WEBS 2-8=-151/105, 2-7=-197/216, 3-7=-305/267, 4-7=-404/512, 1-8=-128/387, 4-6=-377/316

JOINT STRESS INDEX
1 = 0.63, 2 = 0.12, 3 = 0.66, 4 = 0.24, 5 = 0.18, 6 = 0.19, 7 = 0.62, 8 = 0.26 and 9 = 0.50

NOTES (6)
1) Unbalanced roof live loads have been considered for this design.
2) Wind: ASCE 7-02; 110mph (3-second gust); h=16ft; TCDL=4.2psf; BCDL=3.0psf; Category II; Exp B; enclosed; MWFRS and C-C Exterior(2) zone; Lumber DOL=1.60 plate grip DOL=1.60. This truss is designed for C-C for members and forces, and for MWFRS for reactions specified.
3) *This truss has been designed for a 10.0 psf bottom chord live load nonconcurrent with any other live loads.
4) All bearings are assumed to be SYP No.2 crushing capacity of 565.00 psi
5) Provide mechanical connection (by others) of truss to bearing plate capable of withstanding 86 lb uplift at joint 9 and 165 lb uplift at joint 6.
6) Truss Design Engineer: Julius Lee, PE: Florida P.E. License No. 34869: Address: 1109 Coastal Bay Blvd. Boynton Beach, FL 33435

LOAD CASE(S) Standard

Job	Truss	Truss Type	Qty	Ply	ADAM'S FRAMING - DUDDING RES.
L283727	T11	SPECIAL	1	1	L283727026 Job Reference (optional)

Builders FirstSource, Lake City, Fl 32055 — 6.300 s Apr 19 2006 MiTek Industries, Inc. Wed Jul 23 08:55:50 2008 Page 1

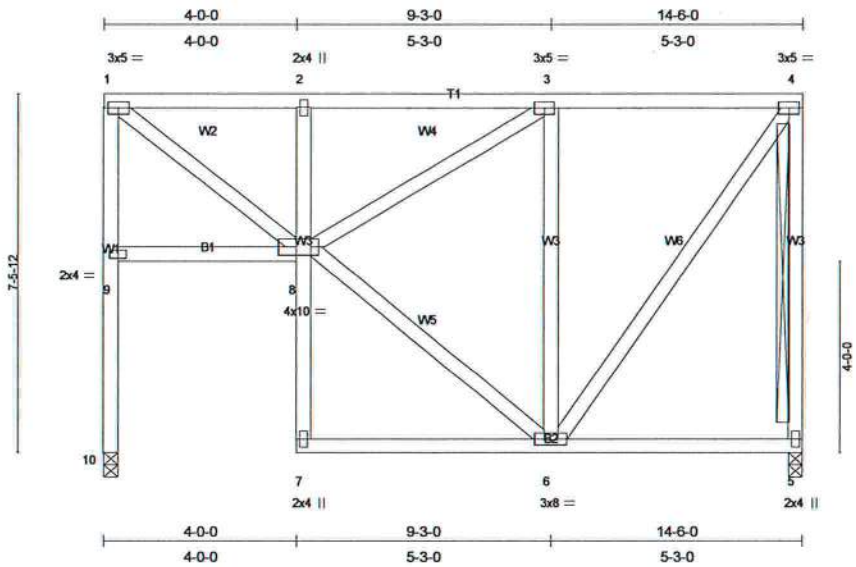

Scale = 1:46.1

Plate Offsets (X,Y): [8:0-4-8,0-2-0]

LOADING (psf)			SPACING	2-0-0	CSI		DEFL	in	(loc)	l/defl	L/d	PLATES	GRIP
TCLL	20.0		Plates Increase	1.25	TC	0.47	Vert(LL)	-0.02	6-7	>999	360	MT20	244/190
TCDL	7.0		Lumber Increase	1.25	BC	0.17	Vert(TL)	-0.05	6-7	>999	240		
BCLL	10.0	*	Rep Stress Incr	YES	WB	0.39	Horz(TL)	0.04	5	n/a	n/a		
BCDL	5.0		Code FBC2004/TPI2002		(Matrix)							Weight: 121 lb	

LUMBER
TOP CHORD 2 X 4 SYP No.2
BOT CHORD 2 X 4 SYP No.2
WEBS 2 X 4 SYP No.3

BRACING
TOP CHORD Structural wood sheathing directly applied or 6-0-0 oc purlins, except end verticals.
BOT CHORD Rigid ceiling directly applied or 10-0-0 oc bracing.
WEBS T-Brace: 2 X 4 SYP No.3 - 4-5
Fasten T and I braces to narrow edge of web with 10d Common wire nails, 9in o.c. ,with 4in minimum end distance.
Brace must cover 90% of web length.

REACTIONS (lb/size) 5=454/0-3-8, 10=454/0-3-8
Max Uplift5=-126(load case 4), 10=-126(load case 4)

FORCES (lb) - Maximum Compression/Maximum Tension
TOP CHORD 9-10=-454/262, 1-9=-428/273, 1-2=-422/250, 2-3=-432/258, 3-4=-229/131, 4-5=-428/270
BOT CHORD 6-7=-1/3, 5-6=-7/11, 8-9=-10/21
WEBS 1-8=-311/521, 3-6=-424/316, 4-6=-215/376, 7-8=0/59, 2-8=-249/199, 6-8=-164/284, 3-8=-148/238

JOINT STRESS INDEX
1 = 0.38, 2 = 0.11, 3 = 0.19, 4 = 0.46, 5 = 0.31, 6 = 0.39, 7 = 0.04, 8 = 0.23 and 9 = 0.45

NOTES (7)
1) Wind: ASCE 7-02; 110mph (3-second gust); h=16ft; TCDL=4.2psf; BCDL=3.0psf; Category II; Exp B; enclosed; MWFRS and C-C Exterior(2) zone; Lumber DOL=1.60 plate grip DOL=1.60. This truss is designed for C-C for members and forces, and for MWFRS for reactions specified.
2) Provide adequate drainage to prevent water ponding.
3) *This truss has been designed for a 10.0 psf bottom chord live load nonconcurrent with any other live loads.
4) All bearings are assumed to be SYP No.2 crushing capacity of 565.00 psi
5) Bearing at joint(s) 10 considers parallel to grain value using ANSI/TPI 1 angle to grain formula. Building designer should verify capacity of bearing surface.
6) Provide mechanical connection (by others) of truss to bearing plate capable of withstanding 126 lb uplift at joint 5 and 126 lb uplift at joint 10.
7) Truss Design Engineer: Julius Lee, PE: Florida P.E. License No. 34869: Address: 1109 Coastal Bay Blvd. Boynton Beach, FL 33435

LOAD CASE(S) Standard

Job	Truss	Truss Type	Qty	Ply	ADAM'S FRAMING - DUDDING RES.
L283727	T12	SPECIAL	6	1	L283727027 Job Reference (optional)

Builders FirstSource, Lake City, Fl 32055 — 6.300 s Apr 19 2006 MiTek Industries, Inc. Wed Jul 23 08:55:51 2008 Page 1

-2-0-0	6-5-6	13-9-0	19-4-12	23-6-1	28-10-10	33-6-0	35-6-0
2-0-0	6-5-6	7-3-10	5-7-12	4-1-5	5-4-9	4-7-6	2-0-0

Scale = 1:61.5
Camber = 1/8 in

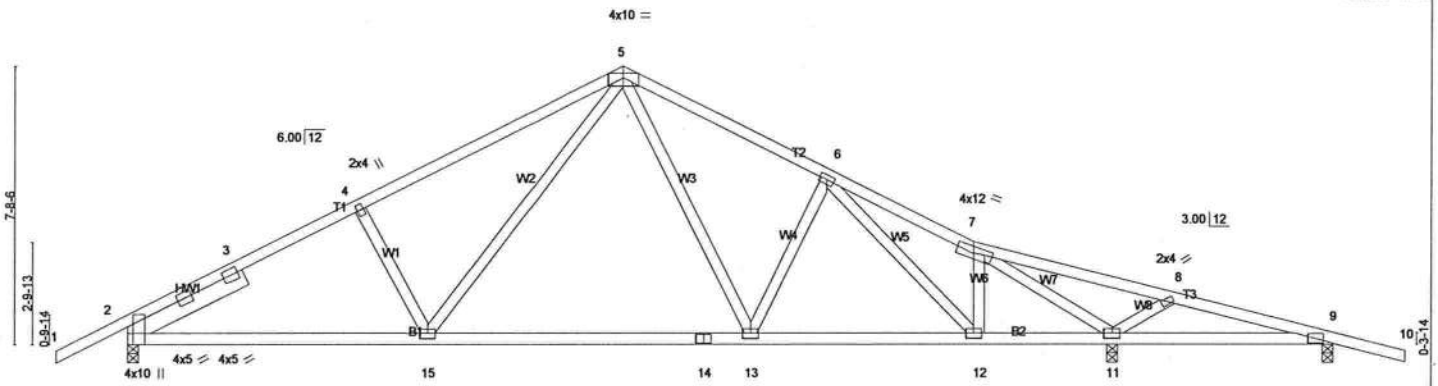

8-3-15	17-3-8	23-6-1	27-4-4	33-6-0
8-3-15	8-11-9	6-2-10	3-10-3	6-1-12

Plate Offsets (X,Y): [2:0-5-15,Edge], [9:0-1-12,0-1-8]

LOADING (psf)		SPACING 2-0-0	CSI	DEFL in (loc) l/defl L/d	PLATES GRIP
TCLL 20.0		Plates Increase 1.25	TC 0.45	Vert(LL) -0.12 13-15 >999 360	MT20 244/190
TCDL 7.0		Lumber Increase 1.25	BC 0.44	Vert(TL) -0.24 13-15 >999 240	
BCLL 10.0	*	Rep Stress Incr YES	WB 0.64	Horz(TL) 0.04 11 n/a n/a	
BCDL 5.0		Code FBC2004/TPI2002	(Matrix)		Weight: 179 lb

LUMBER
TOP CHORD 2 X 4 SYP No.2
BOT CHORD 2 X 4 SYP No.2
WEBS 2 X 4 SYP No.3
SLIDER Left 2 X 6 SYP No.1D 3-7-8

BRACING
TOP CHORD Structural wood sheathing directly applied or 5-3-0 oc purlins.
BOT CHORD Rigid ceiling directly applied or 6-0-0 oc bracing.

REACTIONS (lb/size) 2=955/0-3-8, 11=1221/0-3-8, 9=182/0-3-8
Max Horz 2=105(load case 6)
Max Uplift2=-270(load case 6), 11=-352(load case 7), 9=-211(load case 5)
Max Grav 2=955(load case 1), 11=1221(load case 1), 9=210(load case 11)

FORCES (lb) - Maximum Compression/Maximum Tension
TOP CHORD 1-2=0/26, 2-3=-1373/731, 3-4=-1282/756, 4-5=-1197/777, 5-6=-1044/703, 6-7=-1030/649, 7-8=-330/615, 8-9=-120/285, 9-10=0/25
BOT CHORD 2-15=-502/1116, 14-15=-218/771, 13-14=-218/771, 12-13=-374/954, 11-12=-352/881, 9-11=-244/175
WEBS 4-15=-285/294, 5-15=-248/415, 5-13=-161/324, 6-13=-226/205, 6-12=-123/39, 7-12=0/172, 7-11=-1727/955, 8-11=-384/327

JOINT STRESS INDEX
2 = 0.76, 2 = 0.31, 2 = 0.31, 3 = 0.00, 4 = 0.34, 5 = 0.55, 6 = 0.48, 7 = 0.50, 8 = 0.34, 9 = 0.71, 11 = 0.58, 12 = 0.40, 13 = 0.46, 14 = 0.28 and 15 = 0.45

NOTES (7)
1) Unbalanced roof live loads have been considered for this design.
2) Wind: ASCE 7-02; 110mph (3-second gust); h=16ft; TCDL=4.2psf; BCDL=3.0psf; Category II; Exp B; enclosed; MWFRS and C-C Exterior(2) zone; porch right exposed; Lumber DOL=1.60 plate grip DOL=1.60. This truss is designed for C-C for members and forces, and for MWFRS for reactions specified.
3) *This truss has been designed for a 10.0 psf bottom chord live load nonconcurrent with any other live loads.
4) All plates are 3x5 MT20 unless otherwise indicated.
5) All bearings are assumed to be SYP No.2 crushing capacity of 565.00 psi
6) Provide mechanical connection (by others) of truss to bearing plate capable of withstanding 270 lb uplift at joint 2, 352 lb uplift at joint 11 and 211 lb uplift at joint 9.
7) Truss Design Engineer: Julius Lee, PE: Florida P.E. License No. 34869: Address: 1109 Coastal Bay Blvd. Boynton Beach, FL 33435

LOAD CASE(S) Standard

Job	Truss	Truss Type	Qty	Ply	ADAM'S FRAMING - DUDDING RES.
L283727	T12G	GABLE	1	1	L283727028 Job Reference (optional)

Builders FirstSource, Lake City, Fl 32055

6.300 s Apr 19 2006 MiTek Industries, Inc. Wed Jul 23 08:55:52 2008 Page 1

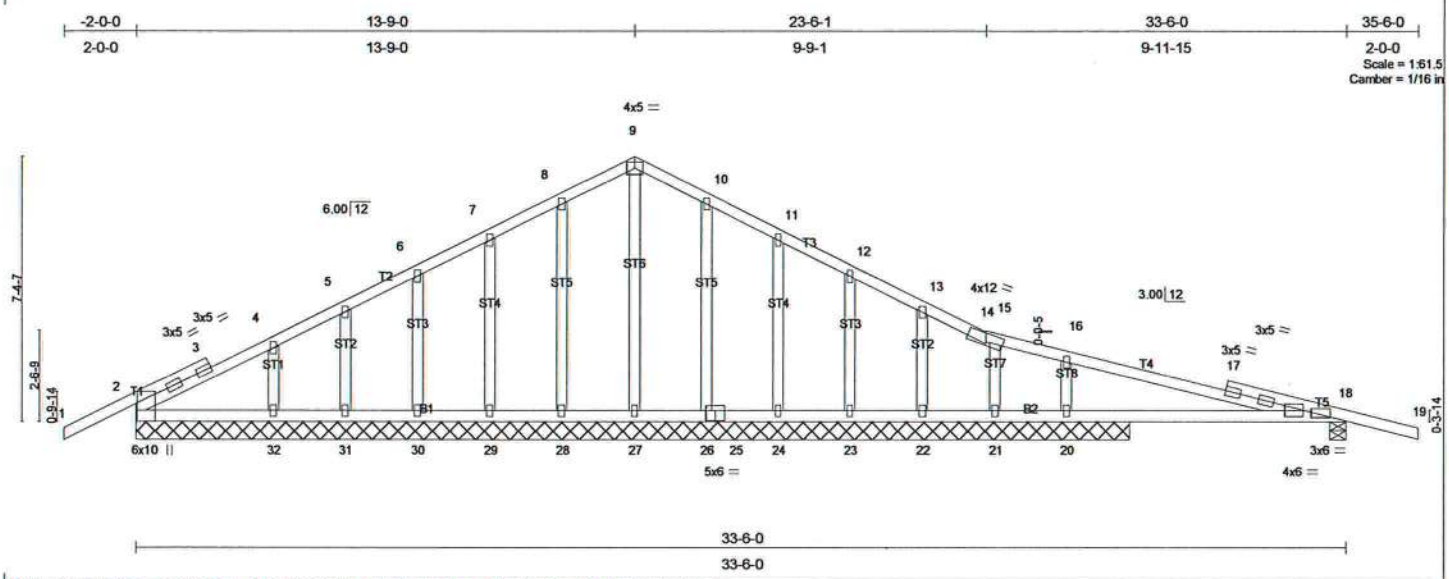

Plate Offsets (X,Y): [2:0-3-8,Edge], [14:0-6-0,0-1-4], [18:0-5-4,0-1-0], [18:1-2-4,0-1-8], [25:0-3-0,0-0-4]

LOADING (psf)		SPACING 2-0-0	CSI	DEFL in (loc) l/defl L/d	PLATES GRIP
TCLL 20.0		Plates Increase 1.25	TC 0.72	Vert(LL) 0.19 18-20 >479 360	MT20 244/190
TCDL 7.0		Lumber Increase 1.25	BC 0.38	Vert(TL) -0.13 18-20 >681 240	
BCLL 10.0	*	Rep Stress Incr NO	WB 0.29	Horz(TL) 0.01 18 n/a n/a	
BCDL 5.0		Code FBC2004/TPI2002	(Matrix)		Weight: 187 lb

LUMBER
TOP CHORD 2 X 4 SYP No.2 *Except*
T4 2 X 4 SYP No.1D
BOT CHORD 2 X 4 SYP No.2
OTHERS 2 X 4 SYP No.3

BRACING
TOP CHORD Structural wood sheathing directly applied or 10-0-0 oc purlins.
BOT CHORD Rigid ceiling directly applied or 6-0-0 oc bracing.

REACTIONS (lb/size) 2=440/27-6-0, 18=660/0-5-8, 27=345/27-6-0, 28=256/27-6-0, 29=244/27-6-0, 30=256/27-6-0, 31=215/27-6-0, 32=350/27-6-0, 26=254/27-6-0, 24=250/27-6-0, 23=228/27-6-0, 22=335/27-6-0, 21=-171/27-6-0, 20=945/27-6-0
Max Horz 2=118(load case 6)
Max Uplift2=-262(load case 7), 18=-606(load case 5), 27=-104(load case 5), 28=-149(load case 7), 29=-160(load case 7), 30=-162(load case 7), 31=-137(load case 7), 32=-225(load case 7), 26=-187(load case 7), 24=-200(load case 7), 23=-173(load case 7), 22=-274(load case 7), 21=-172(load case 11), 20=-832(load case 5)
Max Grav 2=463(load case 10), 18=660(load case 1), 27=345(load case 1), 28=257(load case 10), 29=244(load case 10), 30=256(load case 1), 31=216(load case 10), 32=350(load case 1), 26=259(load case 11), 24=250(load case 1), 23=228(load case 11), 22=335(load case 1), 21=218(load case 5), 20=945(load case 1)

FORCES (lb) - Maximum Compression/Maximum Tension
TOP CHORD 1-2=-32/54, 2-3=-142/75, 3-4=-222/202, 4-5=-126/161, 5-6=-102/174, 6-7=-68/171, 7-8=-37/173, 8-9=-5/169, 9-10=0/174, 10-11=-12/179, 11-12=-29/179, 12-13=-73/173, 13-14=-160/200, 14-15=-114/116, 15-16=-81/82, 16-17=-258/222, 17-18=-191/105, 18-19=-31/53
BOT CHORD 2-32=-114/264, 31-32=-114/264, 30-31=-114/264, 29-30=-114/264, 28-29=-114/264, 27-28=-114/264, 26-27=-114/264, 25-26=-114/264, 24-25=-114/264, 23-24=-114/264, 22-23=-114/264, 21-22=-114/264, 20-21=-114/264, 18-20=-114/264
WEBS 9-27=-325/137, 8-28=-237/255, 7-29=-225/263, 6-30=-235/267, 5-31=-201/235, 4-32=-318/348, 10-26=-239/254, 11-24=-229/267, 12-23=-214/245, 13-22=-293/333, 15-21=-117/111, 16-20=-806/866

JOINT STRESS INDEX
2 = 0.76, 3 = 0.00, 3 = 0.55, 3 = 0.55, 4 = 0.34, 5 = 0.34, 6 = 0.34, 7 = 0.34, 8 = 0.34, 9 = 0.28, 10 = 0.34, 11 = 0.34, 12 = 0.34, 13 = 0.34, 14 = 0.42, 15 = 0.00, 16 = 0.49, 17 = 0.00, 17 = 0.89, 17 = 0.89, 18 = 0.70, 18 = 0.87, 20 = 0.49, 21 = 0.34, 22 = 0.34, 23 = 0.34, 24 = 0.34, 25 = 0.46, 26 = 0.00, 27 = 0.34, 28 = 0.34, 29 = 0.34, 30 = 0.34, 31 = 0.34 and 32 = 0.34

NOTES (10)
1) Unbalanced roof live loads have been considered for this design.
2) Wind: ASCE 7-02; 110mph (3-second gust); h=16ft; TCDL=4.2psf; BCDL=3.0psf; Category II; Exp B; enclosed; MWFRS gable end zone and C-C Exterior(2) zone; porch right exposed; Lumber DOL=1.60 plate grip DOL=1.60. This truss is designed for C-C for members and forces, and for MWFRS for reactions specified.
3) Truss designed for wind loads in the plane of the truss only. For studs exposed to wind (normal to the face), see MiTek "Standard Gable End Detail"
4) *This truss has been designed for a 10.0 psf bottom chord live load nonconcurrent with any other live loads.
5) All plates are 2x4 MT20 unless otherwise indicated.
6) Gable studs spaced at 2-0-0 oc.
7) All bearings are assumed to be SYP No.2 crushing capacity of 565.00 psi
8) Provide mechanical connection (by others) of truss to bearing plate capable of withstanding 262 lb uplift at joint 2, 606 lb uplift at joint 18, 104 lb uplift at joint 27, 149 lb uplift at joint 28, 160 lb uplift at joint 29, 162 lb uplift at joint 30, 137 lb uplift at joint 31, 225 lb uplift at joint 32, 187 lb uplift at joint 26, 200 lb uplift at joint 24, 173 lb uplift at joint 23, 274 lb uplift at joint 22, 172 lb uplift at joint 21 and 832 lb uplift at joint 20.
9) In the LOAD CASE(S) section, loads applied to the face of the truss are noted as front (F) or back (B).
10) Truss Design Engineer: Julius Lee, PE: Florida P.E. License No. 34869: Address: 1109 Coastal Bay Blvd. Boynton Beach, FL 33435

LOAD CASE(S) Standard
1) Regular: Lumber Increase=1.25, Plate Increase=1.25
Uniform Loads (plf)
Vert: 1-9=-114(F=-60), 9-14=-114(F=-60), 14-19=-114(F=-60), 2-18=-10

Job	Truss	Truss Type	Qty	Ply	ADAM'S FRAMING - DUDDING RES.
L283727	T13	SPECIAL	3	1	L283727029 Job Reference (optional)

Builders FirstSource, Lake City, Fl 32055 — 6.300 s Apr 19 2006 MiTek Industries, Inc. Wed Jul 23 08:55:54 2008 Page 1

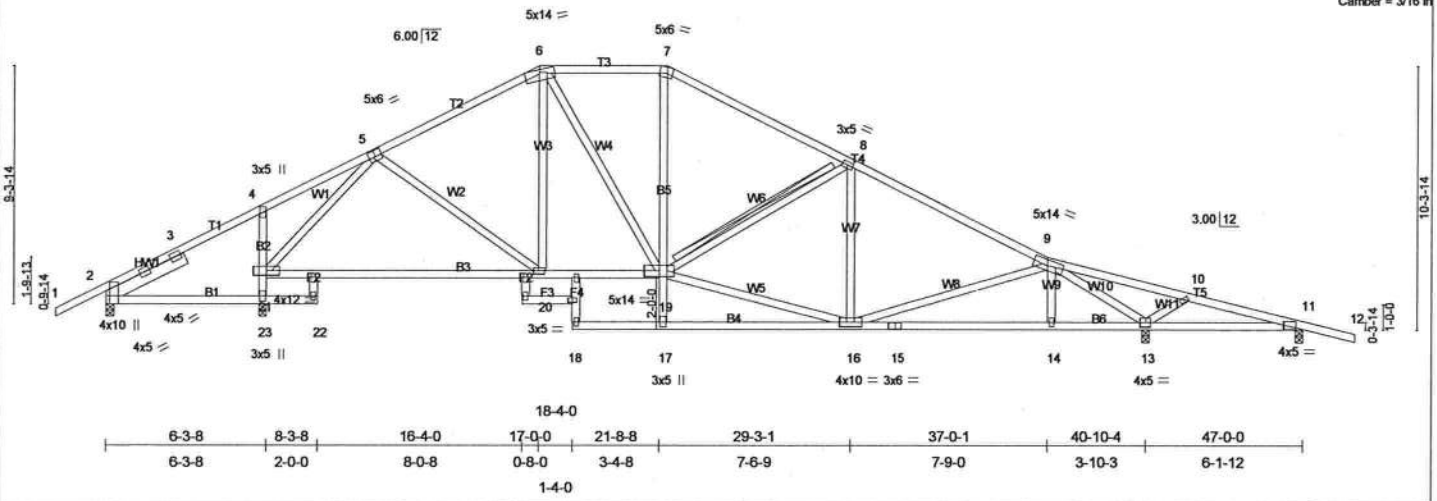

Plate Offsets (X,Y): [2:0-5-15,Edge], [5:0-3-0,0-3-0], [7:0-2-3,Edge], [11:0-3-4,0-0-2]

LOADING (psf)		SPACING 2-0-0	CSI	DEFL in (loc) l/defl L/d	PLATES GRIP
TCLL 20.0		Plates Increase 1.25	TC 0.51	Vert(LL) -0.23 20-21 >999 360	MT20 244/190
TCDL 7.0		Lumber Increase 1.25	BC 0.76	Vert(TL) -0.42 20-21 >999 240	
BCLL 10.0	*	Rep Stress Incr YES	WB 0.98	Horz(TL) 0.07 13 n/a n/a	
BCDL 5.0		Code FBC2004/TPI2002	(Matrix)		Weight: 298 lb

LUMBER
TOP CHORD 2 X 4 SYP No.2
BOT CHORD 2 X 4 SYP No.2 *Except*
B2 2 X 4 SYP No.3, B5 2 X 4 SYP No.3
WEBS 2 X 4 SYP No.3
SLIDER Left 2 X 6 SYP No.1D 3-5-6

BRACING
TOP CHORD Structural wood sheathing directly applied or 4-8-7 oc purlins, except 2-0-0 oc purlins (5-6-15 max.): 6-7.
BOT CHORD Rigid ceiling directly applied or 6-0-0 oc bracing.
WEBS T-Brace: 2 X 4 SYP No.3 - 8-19
Fasten T and I braces to narrow edge of web with 10d Common wire nails, 9in o.c. ,with 4in minimum end distance.
Brace must cover 90% of web length.
JOINTS 1 Brace at Jt(s): 19

REACTIONS (lb/size) 2=234/0-3-8, 23=1403/0-3-8, 13=1501/0-3-8, 11=141/0-3-8
Max Horz 2=-156(load case 7)
Max Uplift2=-252(load case 6), 23=-257(load case 6), 13=-435(load case 7), 11=-214(load case 5)
Max Grav 2=256(load case 10), 23=1403(load case 1), 13=1501(load case 1), 11=155(load case 11)

FORCES (lb) - Maximum Compression/Maximum Tension
TOP CHORD 1-2=0/26, 2-3=0/294, 3-4=0/311, 4-5=0/377, 5-6=-1202/798, 6-7=-1144/841, 7-8=-1374/864, 8-9=-1515/913, 9-10=-381/769, 10-11=-203/463, 11-12=0/25
BOT CHORD 2-23=-194/0, 22-23=0/0, 21-23=-1341/565, 4-21=-280/237, 20-21=-341/799, 19-20=-237/1004, 17-19=0/217, 7-19=-149/339, 17-18=0/0, 16-17=-6/16, 15-16=-583/1197, 14-15=-583/1197, 13-14=-579/1200, 11-13=-417/258
WEBS 5-21=-1355/489, 5-20=0/332, 6-20=-93/102, 6-19=-107/379, 8-19=-196/285, 16-19=-556/1305, 8-16=-287/176, 9-16=-2/124, 9-14=0/169, 9-13=-2278/1278, 10-13=-347/279

JOINT STRESS INDEX
2 = 0.31, 2 = 0.14, 2 = 0.14, 3 = 0.00, 4 = 0.38, 5 = 0.55, 6 = 0.88, 7 = 0.65, 8 = 0.48, 9 = 0.42, 10 = 0.34, 11 = 0.43, 13 = 0.56, 14 = 0.34, 15 = 0.42, 16 = 0.58, 17 = 0.19, 18 = 0.34, 19 = 0.69, 20 = 0.40, 21 = 0.82, 22 = 0.34, 23 = 0.45, 24 = 0.34, 25 = 0.34, 26 = 0.34, 27 = 0.34 and 28 = 0.34

NOTES (9)
1) Unbalanced roof live loads have been considered for this design.
2) Wind: ASCE 7-02; 110mph (3-second gust); h=16ft; TCDL=4.2psf; BCDL=3.0psf; Category II; Exp B; enclosed; MWFRS and C-C Exterior(2) zone; porch left and right exposed; Lumber DOL=1.60 plate grip DOL=1.60. This truss is designed for C-C for members and forces, and for MWFRS for reactions specified.
3) Provide adequate drainage to prevent water ponding.
4) *This truss has been designed for a 10.0 psf bottom chord live load nonconcurrent with any other live loads.
5) All plates are 2x4 MT20 unless otherwise indicated.
6) All bearings are assumed to be SYP No.2 crushing capacity of 565.00 psi
7) Provide mechanical connection (by others) of truss to bearing plate capable of withstanding 252 lb uplift at joint 2, 257 lb uplift at joint 23, 435 lb uplift at joint 13 and 214 lb uplift at joint 11.
8) Design assumes 4x2 (flat orientation) purlins at oc spacing indicated, fastened to truss TC w/ 2-10d nails.
9) Truss Design Engineer: Julius Lee, PE: Florida P.E. License No. 34869: Address: 1109 Coastal Bay Blvd. Boynton Beach, FL 33435

LOAD CASE(S) Standard

Job	Truss	Truss Type	Qty	Ply	ADAM'S FRAMING - DUDDING RES.
L283727	T13G	GABLE	1	1	L283727030 Job Reference (optional)

Builders FirstSource, Lake City, Fl 32055

6.300 s Apr 19 2006 MiTek Industries, Inc. Wed Jul 23 08:55:56 2008 Page 1

-2-0-0	5-10-5	11-5-3	17-7-14	21-4-2	27-3-0	29-3-1	33-3-0	37-0-1	42-4-10	47-0-0	49-0-0
2-0-0	5-10-5	5-6-13	6-2-11	3-8-4	5-10-14	2-0-1	3-11-15	3-9-1	5-4-9	4-7-6	2-0-0

Scale = 1:88.6
Camber = 1/8 in

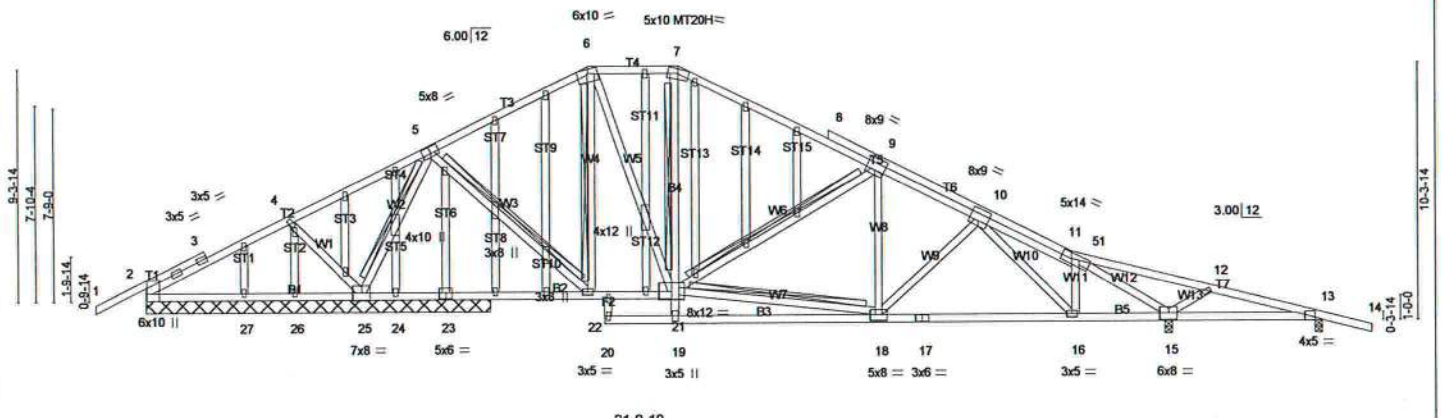

21-0-10

8-7-12	17-7-14	18-4-0	29-3-1	37-0-1	40-10-4	47-0-0
8-7-12	9-0-2	0-8-2 2-8-10	8-2-7	7-9-0	3-10-3	6-1-12

Plate Offsets (X,Y): [2:0-3-8,Edge], [5:0-4-0,0-3-4], [9:0-4-8,0-5-12], [10:0-4-8,0-5-12], [11:0-5-4,0-2-8], [13:0-3-7,0-0-2], [23:0-3-0,0-3-0]

LOADING (psf)			SPACING 2-0-0	CSI		DEFL	in	(loc)	l/defl	L/d	PLATES	GRIP
TCLL	20.0		Plates Increase 1.25	TC	0.77	Vert(LL)	0.30	16-18	>999	360	MT20	244/190
TCDL	7.0		Lumber Increase 1.25	BC	0.63	Vert(TL)	-0.22	20	>999	240	MT20H	187/143
BCLL	10.0	*	Rep Stress Incr NO	WB	0.94	Horz(TL)	-0.07	15	n/a	n/a		
BCDL	5.0		Code FBC2004/TPI2002	(Matrix)							Weight: 396 lb	

LUMBER

TOP CHORD 2 X 4 SYP No.2 *Except*
T6 2 X 4 SYP No.1D
BOT CHORD 2 X 4 SYP No.2 *Except*
B4 2 X 4 SYP No.3
WEBS 2 X 4 SYP No.3
OTHERS 2 X 4 SYP No.3

BRACING

TOP CHORD Structural wood sheathing directly applied or 3-8-6 oc purlins, except 2-0-0 oc purlins (4-9-6 max.): 6-7.
BOT CHORD Rigid ceiling directly applied or 4-6-7 oc bracing. Except:
T-Brace: 2 X 4 SYP No.3 - 7-21
WEBS T-Brace: 2 X 4 SYP No.3 - 5-25, 5-22, 6-22, 18-21, 9-21
Fasten T and I braces to narrow edge of web with 10d Common wire nails, 9in o.c. ,with 4in minimum end distance.
Brace must cover 90% of web length.
JOINTS 1 Brace at Jt(s): 21

REACTIONS (lb/size) 2=520/13-9-8, 25=2473/13-9-8, 15=1669/0-3-8, 27=80/13-9-8, 26=4/13-9-8, 24=98/13-9-8, 13=158/0-3-8
Max Horz 2=168(load case 6)
Max Uplift2=-399(load case 6), 25=-1866(load case 6), 15=-1396(load case 7), 27=-17(load case 6), 24=-166(load case 6), 13=-207(load case 5)
Max Grav 2=584(load case 10), 25=2473(load case 1), 15=1669(load case 1), 27=121(load case 2), 26=63(load case 2), 24=264(load case 2), 13=165(load case 11)

FORCES (lb) - Maximum Compression/Maximum Tension
TOP CHORD 1-2=-30/54, 2-3=-236/144, 3-4=-237/251, 4-5=-587/664, 5-6=-1428/1716, 6-7=-1310/1727, 7-8=-1462/1834, 8-9=-1640/1903, 9-10=-1907/2315, 10-51=-1668/2042, 11-51=-1675/2030, 11-12=-668/701, 12-13=-452/376, 13-14=0/25
BOT CHORD 2-27=-138/217, 26-27=-138/217, 25-26=-138/217, 24-25=-410/500, 23-24=-410/500, 22-23=-410/500, 21-22=-1085/1118, 19-21=-122/209, 7-21=-193/156, 19-20=0/0, 18-19=-273/136, 17-18=-1790/1656, 16-17=-1790/1656, 15-16=-1644/1474, 13-15=-332/495
WEBS 4-25=-593/658, 5-25=-2286/2522, 5-22=-920/847, 6-22=-472/347, 6-21=-568/604, 18-21=-1603/1620, 9-21=-517/792, 9-18=-208/47, 10-18=-109/170, 11-16=-368/304, 11-15=-2541/2901, 12-15=-377/336, 10-16=-290/242

JOINT STRESS INDEX
2 = 0.71, 3 = 0.00, 3 = 0.68, 3 = 0.68, 4 = 0.37, 5 = 0.84, 6 = 0.88, 7 = 0.82, 8 = 0.00, 9 = 0.23, 10 = 0.22, 11 = 0.89, 12 = 0.34, 13 = 0.44, 15 = 0.49, 16 = 0.40, 17 = 0.57, 18 = 0.74, 19 = 0.64, 20 = 0.34, 21 = 0.38, 22 = 0.59, 23 = 0.20, 24 = 0.34, 25 = 0.49, 26 = 0.34, 27 = 0.34, 28 = 0.34, 29 = 0.34, 30 = 0.34, 31 = 0.34, 32 = 0.31, 33 = 0.34, 34 = 0.34, 35 = 0.37, 36 = 0.34, 37 = 0.34, 38 = 0.37, 39 = 0.34, 40 = 0.34, 41 = 0.32, 42 = 0.34, 43 = 0.34, 44 = 0.34, 45 = 0.34, 46 = 0.34, 47 = 0.34, 48 = 0.34, 49 = 0.34 and 50 = 0.34

NOTES (13)
1) Unbalanced roof live loads have been considered for this design.
2) Wind: ASCE 7-02; 110mph (3-second gust); h=16ft; TCDL=4.2psf; BCDL=3.0psf; Category II; Exp B; enclosed; MWFRS gable end zone and C-C Exterior(2) zone; porch left and right exposed; Lumber DOL=1.60 plate grip DOL=1.60. This truss is designed for C-C for members and forces, and for MWFRS for reactions specified.
3) Truss designed for wind loads in the plane of the truss only. For studs exposed to wind (normal to the face), see MiTek "Standard Gable End Detail"
4) Provide adequate drainage to prevent water ponding.
5) *This truss has been designed for a 10.0 psf bottom chord live load nonconcurrent with any other live loads.
6) All plates are MT20 plates unless otherwise indicated.
7) All plates are 2x4 MT20 unless otherwise indicated.
8) Gable studs spaced at 2-0-0 oc.
9) All bearings are assumed to be SYP No.2 crushing capacity of 565.00 psi
10) Provide mechanical connection (by others) of truss to bearing plate capable of withstanding 399 lb uplift at joint 2, 1866 lb uplift at joint 25, 1396 lb uplift at joint 15, 17 lb uplift at joint 27, 166 lb uplift at joint 24 and 207 lb uplift at joint 13.
11) Design assumes 4x2 (flat orientation) purlins at oc spacing indicated, fastened to truss TC w/ 2-10d nails.
12) In the LOAD CASE(S) section, loads applied to the face of the truss are noted as front (F) or back (B).
13) Truss Design Engineer: Julius Lee, PE: Florida P.E. License No. 34869: Address: 1109 Coastal Bay Blvd. Boynton Beach, FL 33435

LOAD CASE(S) Standard
1) Regular: Lumber Increase=1.25, Plate Increase=1.25
Uniform Loads (plf)
Vert: 1-6=-114(F=-60), 6-7=-114(F=-60), 7-8=-114(F=-60), 8-11=-54, 11-14=-54, 2-21=-10, 19-20=-10, 13-19=-10

Job	Truss	Truss Type	Qty	Ply	ADAM'S FRAMING - DUDDING RES.
L283727	T14	SPECIAL	2	1	L283727031 Job Reference (optional)

Builders FirstSource, Lake City, Fl 32055 — 6.300 s Apr 19 2006 MiTek Industries, Inc. Wed Jul 23 08:55:57 2008 Page 1

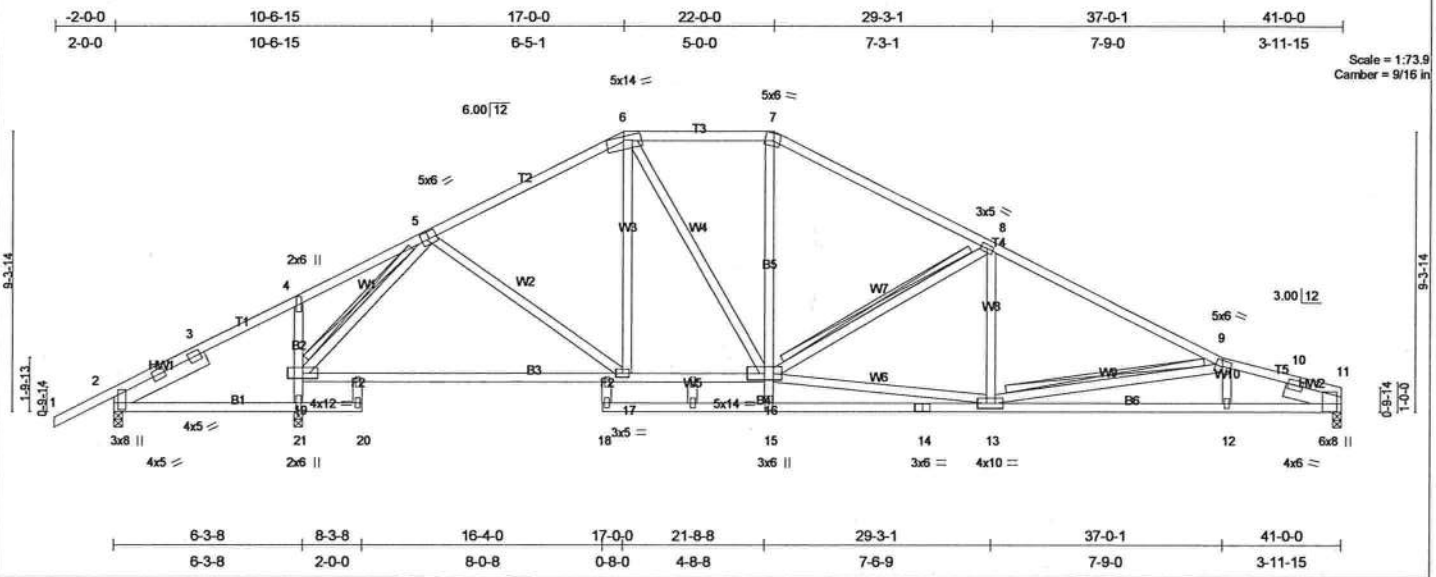

Plate Offsets (X,Y): [2:0-5-3,0-1-11], [5:0-3-0,0-3-0], [7:0-2-3,Edge], [11:0-6-0,0-1-9]

LOADING (psf)		SPACING 2-0-0	CSI	DEFL in (loc) l/defl L/d	PLATES GRIP
TCLL 20.0		Plates Increase 1.25	TC 0.79	Vert(LL) -0.67 18 >629 360	MT20 244/190
TCDL 7.0		Lumber Increase 1.25	BC 0.94	Vert(TL) -1.25 18 >334 240	
BCLL 10.0	*	Rep Stress Incr YES	WB 0.71	Horz(TL) 0.08 11 n/a n/a	
BCDL 5.0		Code FBC2004/TPI2002	(Matrix)		Weight: 266 lb

LUMBER
TOP CHORD 2 X 4 SYP No.2 *Except*
T5 2 X 4 SYP No.1D
BOT CHORD 2 X 4 SYP No.2 *Except*
B2 2 X 4 SYP No.3, B5 2 X 4 SYP No.3
WEBS 2 X 4 SYP No.3
SLIDER Left 2 X 6 SYP No.1D 3-5-6, Right 2 X 6 SYP No.1D 1-11-9

BRACING
TOP CHORD Structural wood sheathing directly applied or 2-3-2 oc purlins, except 2-0-0 oc purlins (5-4-14 max.): 6-7.
BOT CHORD Rigid ceiling directly applied or 5-1-2 oc bracing.
WEBS T-Brace: 2 X 4 SYP No.3 - 5-19, 8-16, 9-13
Fasten T and I braces to narrow edge of web with 10d Common wire nails, 9in o.c. ,with 4in minimum end distance.
Brace must cover 90% of web length.
JOINTS 1 Brace at Jt(s): 16

REACTIONS (lb/size) 11=1111/0-3-8, 2=180/0-3-8, 21=1518/0-3-8
Max Horz 2=131(load case 6)
Max Uplift11=-255(load case 7), 2=-232(load case 6), 21=-279(load case 6)
Max Grav 11=1111(load case 1), 2=227(load case 10), 21=1518(load case 1)

FORCES (lb) - Maximum Compression/Maximum Tension
TOP CHORD 1-2=0/26, 2-3=0/319, 3-4=0/337, 4-5=0/319, 5-6=-1247/792, 6-7=-1216/851, 7-8=-1454/875, 8-9=-1931/1102, 9-10=-2700/1539, 10-11=-2731/1520
BOT CHORD 2-21=-266/0, 20-21=0/0, 19-21=-1462/672, 4-19=-280/246, 17-19=-378/784, 16-17=-320/1044, 15-16=0/285, 7-16=-160/401, 15-18=0/0, 14-15=-178/15, 13-14=-178/15, 12-13=-1419/2557, 11-12=-1409/2554
WEBS 5-19=-1517/621, 5-17=0/396, 6-17=-127/65, 6-16=-137/439, 8-16=-550/481, 13-16=-728/1677, 8-13=0/164, 9-13=-898/622, 9-12=-32/140

JOINT STRESS INDEX
2 = 0.79, 2 = 0.14, 2 = 0.14, 3 = 0.00, 4 = 0.61, 5 = 0.55, 6 = 0.88, 7 = 0.61, 8 = 0.48, 9 = 0.54, 10 = 0.00, 11 = 0.86, 11 = 0.99, 12 = 0.34, 13 = 0.83, 14 = 0.15, 15 = 0.94, 16 = 0.68, 17 = 0.40, 18 = 0.34, 19 = 0.85, 20 = 0.34, 21 = 0.67, 22 = 0.34, 23 = 0.34, 24 = 0.34 and 25 = 0.34

NOTES (9)
1) Unbalanced roof live loads have been considered for this design.
2) Wind: ASCE 7-02; 110mph (3-second gust); h=16ft; TCDL=4.2psf; BCDL=3.0psf; Category II; Exp B; enclosed; MWFRS and C-C Exterior(2) zone; porch left exposed; Lumber DOL=1.60 plate grip DOL=1.60. This truss is designed for C-C for members and forces, and for MWFRS for reactions specified.
3) Provide adequate drainage to prevent water ponding.
4) *This truss has been designed for a 10.0 psf bottom chord live load nonconcurrent with any other live loads.
5) All plates are 2x4 MT20 unless otherwise indicated.
6) All bearings are assumed to be SYP No.2 crushing capacity of 565.00 psi
7) Provide mechanical connection (by others) of truss to bearing plate capable of withstanding 255 lb uplift at joint 11, 232 lb uplift at joint 2 and 279 lb uplift at joint 21.
8) Design assumes 4x2 (flat orientation) purlins at oc spacing indicated, fastened to truss TC w/ 2-10d nails.
9) Truss Design Engineer: Julius Lee, PE: Florida P.E. License No. 34869: Address: 1109 Coastal Bay Blvd. Boynton Beach, FL 33435

LOAD CASE(S) Standard

Job	Truss	Truss Type	Qty	Ply	ADAM'S FRAMING - DUDDING RES.
L283727	T15	SPECIAL	1	1	L283727032 Job Reference (optional)

Builders FirstSource, Lake City, Fl 32055

6.300 s Apr 19 2006 MiTek Industries, Inc. Wed Jul 23 08:55:59 2008 Page 1

-2-0-0	6-1-12	13-1-12	17-0-0	22-0-0	29-3-1	35-2-11	38-8-8	41-0-0
2-0-0	6-1-12	7-0-0	3-10-4	5-0-0	7-3-1	5-11-10	3-5-13	2-3-8

Scale = 1:74.1
Camber = 5/16 in

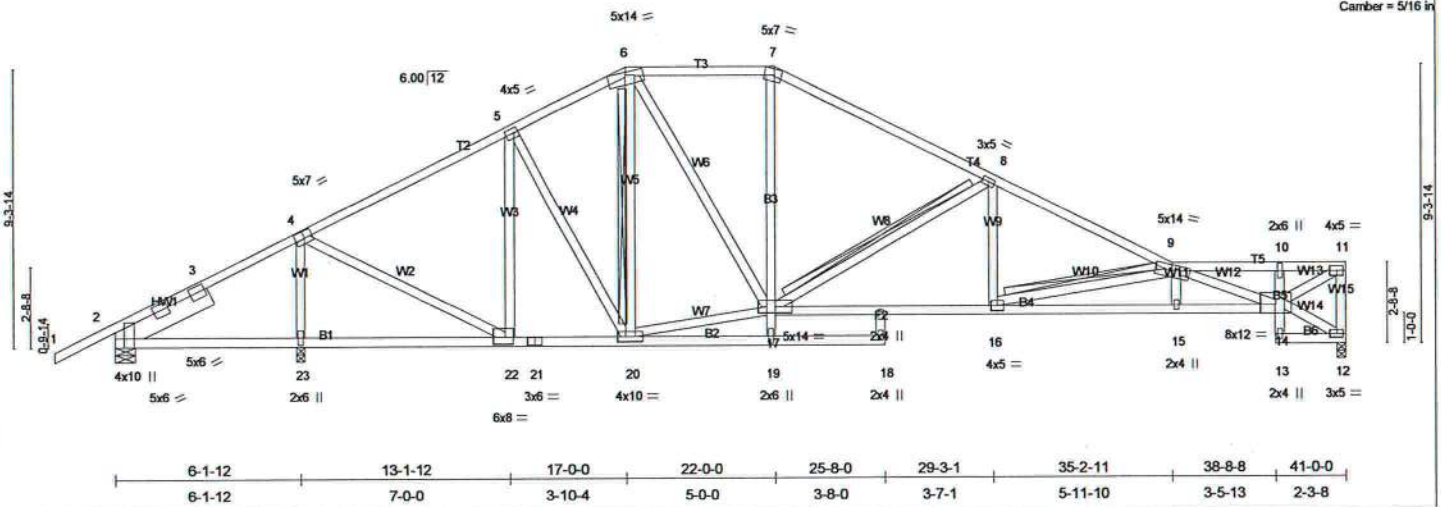

6-1-12	13-1-12	17-0-0	22-0-0	25-8-0	29-3-1	35-2-11	38-8-8	41-0-0
6-1-12	7-0-0	3-10-4	5-0-0	3-8-0	3-7-1	5-11-10	3-5-13	2-3-8

Plate Offsets (X,Y): [2:0-5-15,Edge], [4:0-3-4,0-3-0], [5:0-1-12,0-2-1], [7:0-2-11,Edge], [22:0-3-3,0-2-9]

LOADING (psf)		SPACING 2-0-0	CSI	DEFL in (loc) l/defl L/d	PLATES GRIP
TCLL 20.0		Plates Increase 1.25	TC 0.51	Vert(LL) 0.28 15-16 >999 360	MT20 244/190
TCDL 7.0		Lumber Increase 1.25	BC 0.73	Vert(TL) -0.53 18 >790 240	
BCLL 10.0	*	Rep Stress Incr YES	WB 0.65	Horz(TL) 0.17 12 n/a n/a	
BCDL 5.0		Code FBC2004/TPI2002	(Matrix)		Weight: 278 lb

LUMBER

TOP CHORD 2 X 4 SYP No.2
BOT CHORD 2 X 4 SYP No.2 *Except*
B3 2 X 4 SYP No.3, B5 2 X 4 SYP No.3
WEBS 2 X 4 SYP No.3
SLIDER Left 2 X 8 SYP No.1D 3-5-6

BRACING

TOP CHORD Structural wood sheathing directly applied or 3-11-5 oc purlins, except end verticals, and 2-0-0 oc purlins (5-1-13 max.): 6-7, 9-11.
BOT CHORD Rigid ceiling directly applied or 4-7-1 oc bracing. Except:
1 Row at midpt 16-17
WEBS T-Brace: 2 X 4 SYP No.3 - 6-20, 8-17, 9-16
Fasten T and I braces to narrow edge of web with 10d Common wire nails, 9in o.c. ,with 4in minimum end distance.
Brace must cover 90% of web length.
JOINTS 1 Brace at Jt(s): 17, 11

REACTIONS (lb/size) 12=1049/0-3-8, 2=-137/0-8-0, 23=1849/0-3-8
Max Horz 2=180(load case 6)
Max Uplift12=-231(load case 7), 2=-332(load case 11), 23=-377(load case 6)
Max Grav 12=1049(load case 1), 2=75(load case 10), 23=1849(load case 1)

FORCES (lb) - Maximum Compression/Maximum Tension
TOP CHORD 1-2=0/26, 2-3=-398/811, 3-4=-381/882, 4-5=-762/479, 5-6=-881/649, 6-7=-1061/749, 7-8=-1283/758, 8-9=-2117/1147, 9-10=-1482/783, 10-11=-1341/715, 11-12=-1012/549
BOT CHORD 2-23=-699/297, 22-23=-671/275, 21-22=-261/599, 20-21=-261/599, 19-20=-188/0, 18-19=0/0, 17-19=0/203, 7-17=-59/322, 16-17=-954/1858, 15-16=-1849/3422, 14-15=-1842/3421, 13-14=-0/24, 10-14=-144/91, 12-13=-27/56
WEBS 4-23=-1751/1002, 4-22=-605/1412, 5-22=-608/343, 5-20=-54/398, 6-20=-438/73, 17-20=-193/756, 6-17=-272/674, 8-17=-919/620, 8-16=-181/493, 9-16=-1607/920, 9-15=-12/104, 9-14=-2081/1136, 12-14=-37/17, 11-14=-861/1616

JOINT STRESS INDEX
2 = 0.44, 2 = 0.14, 2 = 0.14, 3 = 0.00, 4 = 0.77, 5 = 0.35, 6 = 0.36, 7 = 0.62, 8 = 0.48, 9 = 0.81, 10 = 0.57, 11 = 0.76, 12 = 0.40, 13 = 0.34, 14 = 0.52, 15 = 0.34, 16 = 0.55, 17 = 0.38, 18 = 0.34, 19 = 0.76, 20 = 0.41, 21 = 0.20, 22 = 0.27, 23 = 0.49 and 24 = 0.34

NOTES (8)
1) Unbalanced roof live loads have been considered for this design.
2) Wind: ASCE 7-02; 110mph (3-second gust); h=16ft; TCDL=4.2psf; BCDL=3.0psf; Category II; Exp B; enclosed; MWFRS and C-C Exterior(2) zone; porch left exposed; Lumber DOL=1.60 plate grip DOL=1.60. This truss is designed for C-C for members and forces, and for MWFRS for reactions specified.
3) Provide adequate drainage to prevent water ponding.
4) *This truss has been designed for a 10.0 psf bottom chord live load nonconcurrent with any other live loads.
5) All bearings are assumed to be SYP No.2 crushing capacity of 565.00 psi
6) Provide mechanical connection (by others) of truss to bearing plate capable of withstanding 231 lb uplift at joint 12, 332 lb uplift at joint 2 and 377 lb uplift at joint 23.
7) Design assumes 4x2 (flat orientation) purlins at oc spacing indicated, fastened to truss TC w/ 2-10d nails.
8) Truss Design Engineer: Julius Lee, PE: Florida P.E. License No. 34869: Address: 1109 Coastal Bay Blvd. Boynton Beach, FL 33435

LOAD CASE(S) Standard

Job	Truss	Truss Type	Qty	Ply	ADAM'S FRAMING - DUDDING RES.
L283727	T16	SPECIAL	2	1	L283727033 Job Reference (optional)

Builders FirstSource, Lake City, Fl 32055 — 6.300 s Apr 19 2006 MiTek Industries, Inc. Wed Jul 23 08:56:00 2008 Page 1

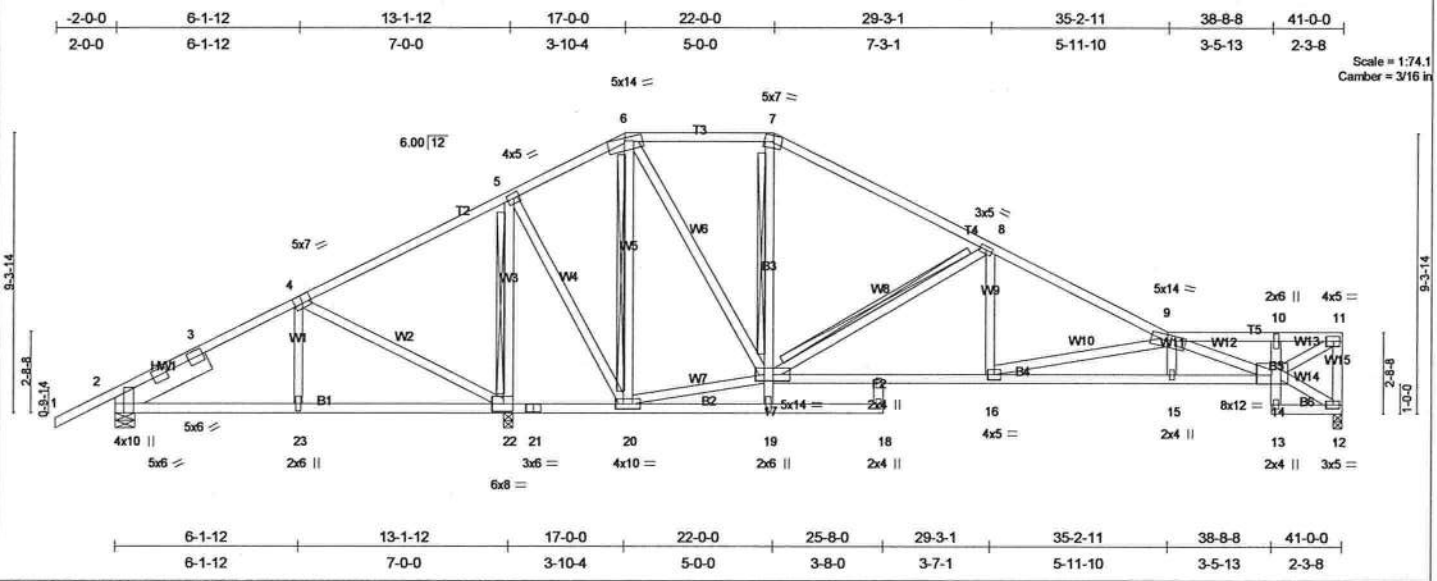

Plate Offsets (X,Y): [2:0-5-15,Edge], [4:0-3-8,0-3-4], [7:0-3-1,Edge], [22:0-3-8,0-3-0]

LOADING (psf)		SPACING 2-0-0	CSI	DEFL in (loc) l/defl L/d	PLATES GRIP
TCLL 20.0		Plates Increase 1.25	TC 0.43	Vert(LL) -0.19 18 >999 360	MT20 244/190
TCDL 7.0		Lumber Increase 1.25	BC 0.46	Vert(TL) -0.38 18 >879 240	
BCLL 10.0	*	Rep Stress Incr YES	WB 0.82	Horz(TL) 0.09 12 n/a n/a	
BCDL 5.0		Code FBC2004/TPI2002	(Matrix)		Weight: 278 lb

LUMBER
TOP CHORD 2 X 4 SYP No.2
BOT CHORD 2 X 4 SYP No.2 *Except*
B3 2 X 4 SYP No.3, B5 2 X 4 SYP No.3
WEBS 2 X 4 SYP No.3
SLIDER Left 2 X 8 SYP No.1D 3-5-6

BRACING
TOP CHORD Structural wood sheathing directly applied or 5-7-13 oc purlins, except end verticals, and 2-0-0 oc purlins (6-0-0 max.): 6-7, 9-11.
BOT CHORD Rigid ceiling directly applied or 6-0-0 oc bracing. Except:
T-Brace: 2 X 4 SYP No.3 - 7-17
WEBS T-Brace: 2 X 4 SYP No.3 - 5-22, 6-20, 8-17
Fasten T and I braces to narrow edge of web with 10d Common wire nails, 9in o.c. ,with 4in minimum end distance.
Brace must cover 90% of web length.
JOINTS 1 Brace at Jt(s): 17, 11

REACTIONS (lb/size) 12=708/0-3-8, 2=129/0-8-0, 22=1924/0-3-8
Max Horz 2=180(load case 6)
Max Uplift12=-158(load case 7), 2=-273(load case 6), 22=-512(load case 6)
Max Grav 12=710(load case 11), 2=330(load case 10), 22=1924(load case 1)

FORCES (lb) - Maximum Compression/Maximum Tension
TOP CHORD 1-2=0/26, 2-3=-174/551, 3-4=-23/571, 4-5=-446/890, 5-6=-41/204, 6-7=-262/251, 7-8=-395/205, 8-9=-1131/524, 9-10=-977/469, 10-11=-884/430, 11-12=-681/344
BOT CHORD 2-23=-474/78, 22-23=-475/76, 21-22=-725/539, 20-21=-725/539, 19-20=-217/0, 18-19=0/0, 17-19=0/201, 7-17=-222/191, 16-17=-394/959, 15-16=-1038/2120, 14-15=-1033/2122, 13-14=0/26, 10-14=-140/89, 12-13=-17/39
WEBS 4-23=-248/212, 4-22=-527/701, 5-22=-1612/917, 5-20=-524/1162, 6-20=-961/445, 17-20=-123/370, 6-17=-394/824, 8-17=-797/544, 8-16=-115/414, 9-16=-1193/662, 9-15=0/122, 9-14=-1228/605, 12-14=-26/10, 11-14=-517/1064

JOINT STRESS INDEX
2 = 0.44, 2 = 0.09, 2 = 0.09, 3 = 0.00, 4 = 0.64, 5 = 0.67, 6 = 0.39, 7 = 0.65, 8 = 0.48, 9 = 0.49, 10 = 0.38, 11 = 0.50, 12 = 0.40, 13 = 0.34, 14 = 0.34, 15 = 0.34, 16 = 0.41, 17 = 0.46, 18 = 0.34, 19 = 0.85, 20 = 0.82, 21 = 0.34, 22 = 0.22, 23 = 0.23 and 24 = 0.34

NOTES (8)
1) Unbalanced roof live loads have been considered for this design.
2) Wind: ASCE 7-02; 110mph (3-second gust); h=16ft; TCDL=4.2psf; BCDL=3.0psf; Category II; Exp B; enclosed; MWFRS and C-C Exterior(2) zone; porch left exposed; Lumber DOL=1.60 plate grip DOL=1.60. This truss is designed for C-C for members and forces, and for MWFRS for reactions specified.
3) Provide adequate drainage to prevent water ponding.
4) *This truss has been designed for a 10.0 psf bottom chord live load nonconcurrent with any other live loads.
5) All bearings are assumed to be SYP No.2 crushing capacity of 565.00 psi
6) Provide mechanical connection (by others) of truss to bearing plate capable of withstanding 158 lb uplift at joint 12, 273 lb uplift at joint 2 and 512 lb uplift at joint 22.
7) Design assumes 4x2 (flat orientation) purlins at oc spacing indicated, fastened to truss TC w/ 2-10d nails.
8) Truss Design Engineer: Julius Lee, PE: Florida P.E. License No. 34869: Address: 1109 Coastal Bay Blvd. Boynton Beach, FL 33435

LOAD CASE(S) Standard

Job	Truss	Truss Type	Qty	Ply	ADAM'S FRAMING - DUDDING RES.
L283727	T17	SPECIAL	3	1	L283727034 Job Reference (optional)

Builders FirstSource, Lake City, Fl 32055 — 6.300 s Apr 19 2006 MiTek Industries, Inc. Wed Jul 23 08:56:02 2008 Page 1

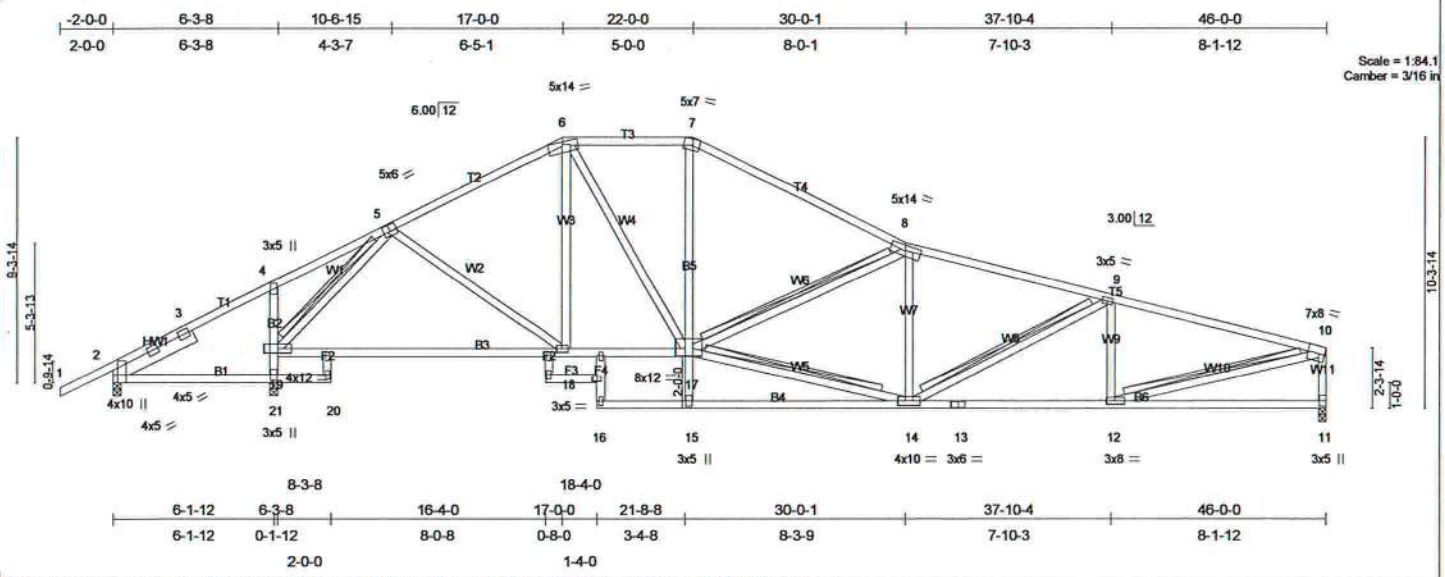

Plate Offsets (X,Y): [2:0-5-15,Edge], [5:0-3-0,0-3-0], [7:0-2-11,Edge], [10:0-2-12,Edge], [12:0-3-8,0-1-8], [17:0-4-7,0-3-6]

LOADING (psf)			SPACING 2-0-0	CSI		DEFL	in	(loc)	l/defl	L/d	PLATES	GRIP
TCLL	20.0		Plates Increase 1.25	TC	1.00	Vert(LL)	-0.23	18-19	>999	360	MT20	244/190
TCDL	7.0		Lumber Increase 1.25	BC	0.92	Vert(TL)	-0.43	18-19	>999	240		
BCLL	10.0	*	Rep Stress Incr YES	WB	0.66	Horz(TL)	0.07	11	n/a	n/a		
BCDL	5.0		Code FBC2004/TPI2002	(Matrix)							Weight: 301 lb	

LUMBER
TOP CHORD 2 X 4 SYP No.2
BOT CHORD 2 X 4 SYP No.2 *Except*
B2 2 X 4 SYP No.3, B5 2 X 4 SYP No.3
WEBS 2 X 4 SYP No.3
SLIDER Left 2 X 6 SYP No.1D 3-5-6

BRACING
TOP CHORD Structural wood sheathing directly applied or 3-10-5 oc purlins, except end verticals, and 2-0-0 oc purlins (4-9-14 max.): 6-7.
BOT CHORD Rigid ceiling directly applied or 5-10-14 oc bracing.
WEBS T-Brace: 2 X 4 SYP No.3 - 5-19, 8-17, 14-17, 9-14, 10-12
Fasten T and I braces to narrow edge of web with 10d Common wire nails, 9in o.c. ,with 4in minimum end distance.
Brace must cover 90% of web length.
JOINTS 1 Brace at Jt(s): 17

REACTIONS (lb/size) 2=181/0-3-8, 21=1656/0-3-8, 11=1262/0-3-8
Max Horz 2=153(load case 6)
Max Uplift2=-221(load case 6), 21=-317(load case 6), 11=-306(load case 7)
Max Grav 2=228(load case 10), 21=1656(load case 1), 11=1262(load case 1)

FORCES (lb) - Maximum Compression/Maximum Tension
TOP CHORD 1-2=0/26, 2-3=0/309, 3-4=0/327, 4-5=0/313, 5-6=-1461/927, 6-7=-1497/1036, 7-8=-1775/1071, 8-9=-2157/1285, 9-10=-2169/1230, 10-11=-1212/728
BOT CHORD 2-21=-258/0, 20-21=0/0, 19-21=-1601/796, 4-19=-281/251, 18-19=-500/914, 17-18=-493/1234, 15-17=0/237, 7-17=-204/451, 15-16=0/0, 14-15=-11/39, 13-14=-1135/2054, 12-13=-1135/2054, 11-12=-108/174
WEBS 5-19=-1703/781, 5-18=0/466, 6-18=-168/48, 6-17=-266/606, 8-17=-637/509, 14-17=-1116/2072, 8-14=-404/285, 9-14=-56/122, 9-12=-418/322, 10-12=-1061/1941

JOINT STRESS INDEX
2 = 0.28, 2 = 0.14, 2 = 0.14, 3 = 0.00, 4 = 0.44, 5 = 0.56, 6 = 0.87, 7 = 0.73, 8 = 0.51, 9 = 0.44, 10 = 0.69, 11 = 0.59, 12 = 0.76, 13 = 0.71, 14 = 0.93, 15 = 0.18, 16 = 0.34, 17 = 0.46, 18 = 0.40, 19 = 0.85, 20 = 0.34, 21 = 0.48, 22 = 0.34, 23 = 0.34, 24 = 0.34, 25 = 0.34 and 26 = 0.34

NOTES (9)
1) Unbalanced roof live loads have been considered for this design.
2) Wind: ASCE 7-02; 110mph (3-second gust); h=16ft; TCDL=4.2psf; BCDL=3.0psf; Category II; Exp B; enclosed; MWFRS and C-C Exterior(2) zone; porch left exposed; Lumber DOL=1.60 plate grip DOL=1.60. This truss is designed for C-C for members and forces, and for MWFRS for reactions specified.
3) Provide adequate drainage to prevent water ponding.
4) *This truss has been designed for a 10.0 psf bottom chord live load nonconcurrent with any other live loads.
5) All plates are 2x4 MT20 unless otherwise indicated.
6) All bearings are assumed to be SYP No.2 crushing capacity of 565.00 psi
7) Provide mechanical connection (by others) of truss to bearing plate capable of withstanding 221 lb uplift at joint 2, 317 lb uplift at joint 21 and 306 lb uplift at joint 11.
8) Design assumes 4x2 (flat orientation) purlins at oc spacing indicated, fastened to truss TC w/ 2-10d nails.
9) Truss Design Engineer: Julius Lee, PE: Florida P.E. License No. 34869: Address: 1109 Coastal Bay Blvd. Boynton Beach, FL 33435

LOAD CASE(S) Standard

Job	Truss	Truss Type	Qty	Ply	ADAM'S FRAMING - DUDDING RES.
L283727	T17G	GABLE	1	1	L283727035 Job Reference (optional)

Builders FirstSource, Lake City, Fl 32055 — 6.300 s Apr 19 2006 MiTek Industries, Inc. Wed Jul 23 08:56:04 2008 Page 1

-2-0-0	5-10-5	11-5-3	17-0-0	22-0-0	28-8-4	33-0-0	37-10-4	46-0-0
2-0-0	5-10-5	5-6-13	5-6-13	5-0-0	6-8-4	4-3-12	4-10-4	8-1-12

Scale = 1:85.3
Camber = 3/8 in

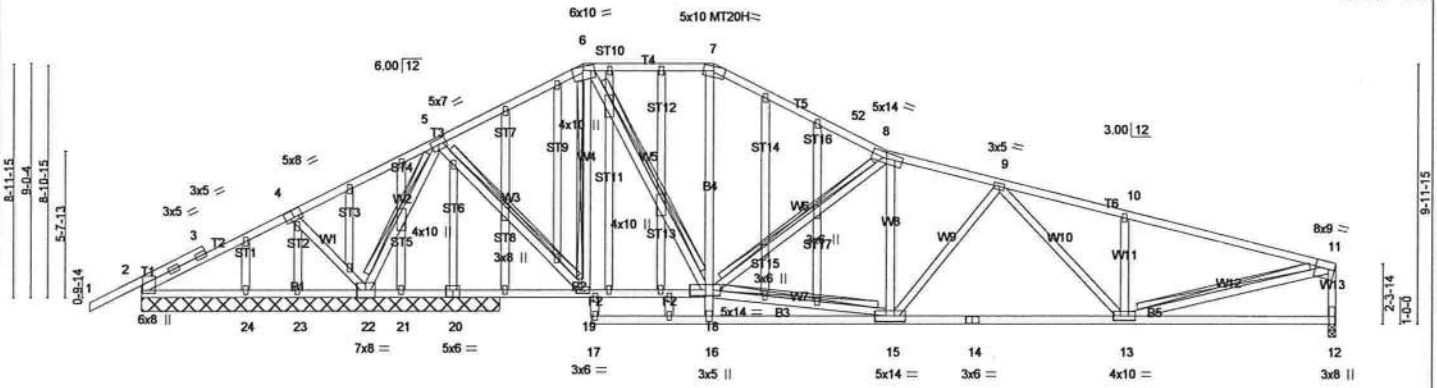

8-7-12	17-0-0	17-4-0	21-8-8	28-8-4	37-10-4	46-0-0
8-7-12	8-4-4	0-4-0	4-4-8	6-11-12	9-2-0	8-1-12

Plate Offsets (X,Y): [2:0-1-8,0-0-8], [4:0-4-0,0-3-4], [11:0-2-12,Edge], [20:0-3-0,0-3-0]

LOADING (psf)			SPACING 2-0-0	CSI		DEFL	in	(loc)	l/defl	L/d	PLATES	GRIP
TCLL	20.0		Plates Increase 1.25	TC	0.87	Vert(LL)	0.56	13-15	>767	360	MT20	244/190
TCDL	7.0		Lumber Increase 1.25	BC	0.64	Vert(TL)	-0.71	17	>604	240	MT20H	187/143
BCLL	10.0	*	Rep Stress Incr NO	WB	0.95	Horz(TL)	-0.07	12	n/a	n/a		
BCDL	5.0		Code FBC2004/TPI2002	(Matrix)							Weight: 390 lb	

LUMBER
TOP CHORD 2 X 4 SYP No.2
BOT CHORD 2 X 4 SYP No.2 *Except*
B4 2 X 4 SYP No.3
WEBS 2 X 4 SYP No.3 *Except*
W13 2 X 4 SYP No.2
OTHERS 2 X 4 SYP No.3

BRACING
TOP CHORD Structural wood sheathing directly applied or 3-6-10 oc purlins, except end verticals, and 2-0-0 oc purlins (4-4-5 max.): 6-7.
BOT CHORD Rigid ceiling directly applied or 3-7-12 oc bracing.
WEBS T-Brace: 2 X 4 SYP No.3 - 5-22, 5-19, 6-19, 6-18, 15-18, 8-18, 11-13
Fasten T and I braces to narrow edge of web with 10d Common wire nails, 9in o.c. ,with 4in minimum end distance.
Brace must cover 90% of web length.
JOINTS 1 Brace at Jt(s): 18

REACTIONS (lb/size) 2=261/13-9-8, 22=3015/13-9-8, 12=1360/0-3-8, 24=85/13-9-8, 23=2/13-9-8, 21=105/13-9-8
Max Horz 2=238(load case 6)
Max Uplift2=-208(load case 6), 22=-2294(load case 6), 12=-940(load case 6), 24=-26(load case 6)
Max Grav 2=420(load case 10), 22=3015(load case 1), 12=1360(load case 1), 24=127(load case 2), 23=59(load case 2), 21=243(load case 2)

FORCES (lb) - Maximum Compression/Maximum Tension
TOP CHORD 1-2=-30/54, 2-3=-806/670, 3-4=-902/780, 4-5=-1258/1211, 5-6=-1418/1567, 6-7=-1578/1924, 7-52=-1769/2058, 8-52=-1892/2104, 8-9=-2324/2730, 9-10=-2346/2783, 10-11=-2359/2697, 11-12=-1312/1435
BOT CHORD 2-24=-602/647, 23-24=-602/647, 22-23=-602/647, 21-22=-196/335, 20-21=-196/335, 19-20=-196/335, 18-19=-1098/1122, 16-18=-86/244, 7-18=-235/247, 16-17=0/0, 15-16=-193/77, 14-15=-2543/2301, 13-14=-2543/2301, 12-13=-220/187
WEBS 4-22=-631/701, 5-22=-2865/3089, 5-19=-1317/1251, 6-19=-820/872, 6-18=-1117/987, 15-18=-2299/2191, 8-18=-843/1182, 8-15=-212/80, 9-15=-108/175, 10-13=-380/318, 11-13=-2411/2116, 9-13=-184/33

JOINT STRESS INDEX
2 = 0.86, 3 = 0.00, 3 = 0.72, 3 = 0.72, 4 = 0.76, 5 = 0.85, 6 = 0.81, 7 = 0.85, 8 = 0.76, 9 = 0.44, 10 = 0.34, 11 = 0.66, 12 = 0.89, 13 = 0.95, 14 = 0.87, 15 = 0.55, 16 = 0.66, 17 = 0.34, 18 = 0.89, 19 = 0.80, 20 = 0.20, 21 = 0.34, 22 = 0.60, 23 = 0.34, 24 = 0.34, 25 = 0.34, 26 = 0.34, 27 = 0.34, 28 = 0.34, 29 = 0.34, 30 = 0.34, 31 = 0.34, 32 = 0.31, 33 = 0.34, 34 = 0.34, 35 = 0.41, 36 = 0.34, 37 = 0.34, 38 = 0.34, 39 = 0.34, 40 = 0.29, 41 = 0.34, 42 = 0.34, 43 = 0.29, 44 = 0.34, 45 = 0.34, 46 = 0.34, 47 = 0.34, 48 = 0.70, 49 = 0.34, 50 = 0.34 and 51 = 0.70

NOTES (13)
1) Unbalanced roof live loads have been considered for this design.
2) Wind: ASCE 7-02; 110mph (3-second gust); h=16ft; TCDL=4.2psf; BCDL=3.0psf; Category II; Exp B; enclosed; MWFRS gable end zone and C-C Exterior(2) zone; porch left exposed; Lumber DOL=1.60 plate grip DOL=1.60. This truss is designed for C-C for members and forces, and for MWFRS for reactions specified.
3) Truss designed for wind loads in the plane of the truss only. For studs exposed to wind (normal to the face), see MiTek "Standard Gable End Detail"
4) Provide adequate drainage to prevent water ponding.
5) *This truss has been designed for a 10.0 psf bottom chord live load nonconcurrent with any other live loads.
6) All plates are MT20 plates unless otherwise indicated.
7) All plates are 2x4 MT20 unless otherwise indicated.
8) Gable studs spaced at 2-0-0 oc.
9) All bearings are assumed to be SYP No.2 crushing capacity of 565.00 psi
10) Provide mechanical connection (by others) of truss to bearing plate capable of withstanding 208 lb uplift at joint 2, 2294 lb uplift at joint 22, 940 lb uplift at joint 12 and 26 lb uplift at joint 24.
11) Design assumes 4x2 (flat orientation) purlins at oc spacing indicated, fastened to truss TC w/ 2-10d nails.
12) In the LOAD CASE(S) section, loads applied to the face of the truss are noted as front (F) or back (B).
13) Truss Design Engineer: Julius Lee, PE: Florida P.E. License No. 34869: Address: 1109 Coastal Bay Blvd. Boynton Beach, FL 33435

LOAD CASE(S) Standard
1) Regular: Lumber Increase=1.25, Plate Increase=1.25
Uniform Loads (plf)
Vert: 1-6=-114(F=-60), 6-7=-114(F=-60), 7-52=-114(F=-60), 8-52=-54, 8-11=-54, 2-18=-10, 16-17=-10, 12-16=-10

Job	Truss	Truss Type	Qty	Ply	ADAM'S FRAMING - DUDDING RES.
L283727	T18	SPECIAL	1	1	L283727036 Job Reference (optional)

Builders FirstSource, Lake City, Fl 32055 — 6.300 s Apr 19 2006 MiTek Industries, Inc. Wed Jul 23 08:56:05 2008 Page 1

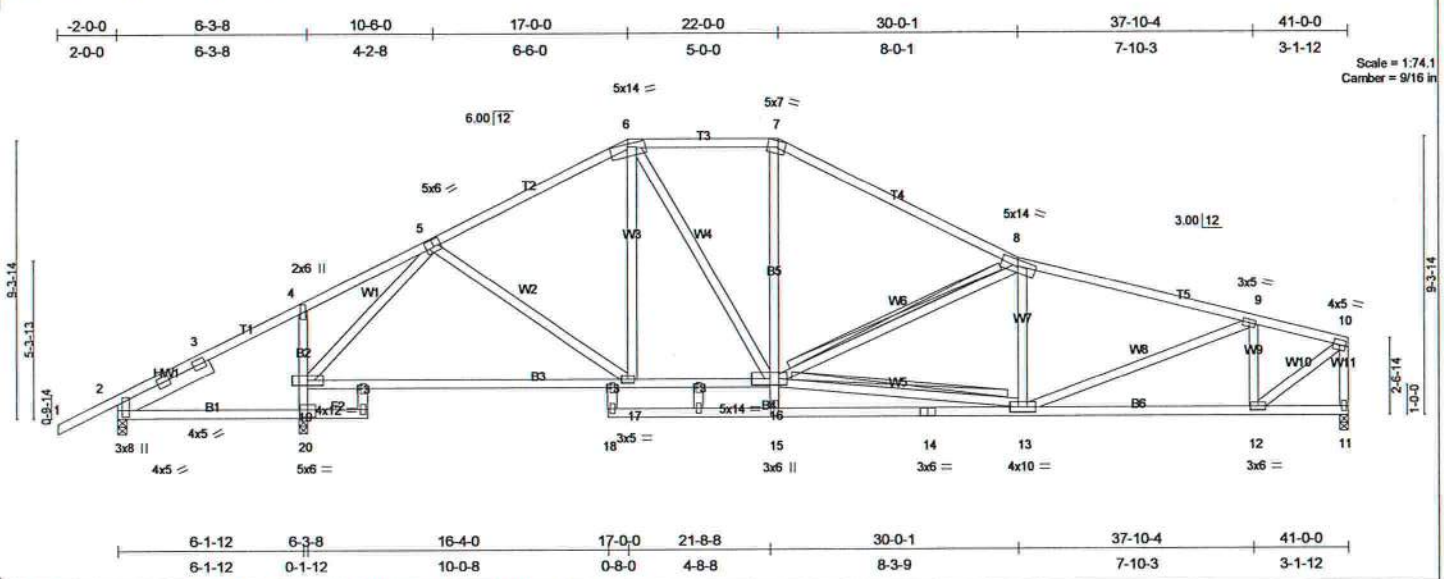

Plate Offsets (X,Y): [2:0-5-3,0-1-11], [5:0-2-12,0-3-0], [7:0-2-11,Edge], [20:0-3-0,0-3-0]

LOADING (psf)		SPACING 2-0-0	CSI	DEFL in (loc) l/defl L/d	PLATES GRIP
TCLL 20.0		Plates Increase 1.25	TC 0.43	Vert(LL) -0.64 18 >647 360	MT20 244/190
TCDL 7.0		Lumber Increase 1.25	BC 0.87	Vert(TL) -1.20 18 >346 240	
BCLL 10.0	*	Rep Stress Incr YES	WB 1.00	Horz(TL) 0.06 11 n/a n/a	
BCDL 5.0		Code FBC2004/TPI2002	(Matrix)		Weight: 273 lb

LUMBER
TOP CHORD 2 X 4 SYP No.2
BOT CHORD 2 X 4 SYP No.2 *Except*
B2 2 X 4 SYP No.3, B5 2 X 4 SYP No.3
WEBS 2 X 4 SYP No.3
SLIDER Left 2 X 6 SYP No.1D 3-5-6

BRACING
TOP CHORD Structural wood sheathing directly applied or 4-3-4 oc purlins, except end verticals, and 2-0-0 oc purlins (5-3-13 max.): 6-7.
BOT CHORD Rigid ceiling directly applied or 5-7-8 oc bracing.
WEBS T-Brace: 2 X 4 SYP No.3 - 8-16, 13-16
Fasten T and I braces to narrow edge of web with 10d Common wire nails, 9in o.c. ,with 4in minimum end distance.
Brace must cover 90% of web length.
JOINTS 1 Brace at Jt(s): 16

REACTIONS (lb/size) 2=239/0-3-8, 20=1422/0-3-8, 11=1117/0-3-8
Max Horz 2=178(load case 6)
Max Uplift2=-209(load case 6), 20=-317(load case 6), 11=-251(load case 7)
Max Grav 2=262(load case 10), 20=1422(load case 1), 11=1117(load case 1)

FORCES (lb) - Maximum Compression/Maximum Tension
TOP CHORD 1-2=0/26, 2-3=0/193, 3-4=0/213, 4-5=0/182, 5-6=-1273/779, 6-7=-1234/843, 7-8=-1481/856, 8-9=-1824/1038, 9-10=-1110/618, 10-11=-1110/615
BOT CHORD 2-20=-160/0, 19-20=-1384/700, 4-19=-278/257, 17-19=-477/843, 16-17=-426/1067, 15-16=0/305, 7-16=-112/391, 15-18=0/0, 14-15=-120/50, 13-14=-120/50, 12-13=-591/1077, 11-12=-3/5
WEBS 5-19=-1418/645, 5-17=0/354, 6-17=-96/95, 6-16=-145/430, 8-16=-569/462, 13-16=-835/1697, 8-13=-393/283, 9-13=-350/696, 9-12=-764/494, 10-12=-742/1356

JOINT STRESS INDEX
2 = 0.79, 2 = 0.14, 2 = 0.14, 3 = 0.00, 4 = 0.54, 5 = 0.62, 6 = 0.86, 7 = 0.70, 8 = 0.50, 9 = 0.44, 10 = 0.62, 11 = 0.41, 12 = 0.81, 13 = 0.83, 14 = 0.22, 15 = 0.76, 16 = 0.68, 17 = 0.40, 18 = 0.34, 19 = 0.82, 20 = 0.61, 21 = 0.34, 22 = 0.34, 23 = 0.34, 24 = 0.34 and 25 = 0.34

NOTES (9)
1) Unbalanced roof live loads have been considered for this design.
2) Wind: ASCE 7-02; 110mph (3-second gust); h=16ft; TCDL=4.2psf; BCDL=3.0psf; Category II; Exp B; enclosed; MWFRS and C-C Exterior(2) zone; porch left exposed; Lumber DOL=1.60 plate grip DOL=1.60. This truss is designed for C-C for members and forces, and for MWFRS for reactions specified.
3) Provide adequate drainage to prevent water ponding.
4) *This truss has been designed for a 10.0 psf bottom chord live load nonconcurrent with any other live loads.
5) All plates are 2x4 MT20 unless otherwise indicated.
6) All bearings are assumed to be SYP No.2 crushing capacity of 565.00 psi
7) Provide mechanical connection (by others) of truss to bearing plate capable of withstanding 209 lb uplift at joint 2, 317 lb uplift at joint 20 and 251 lb uplift at joint 11.
8) Design assumes 4x2 (flat orientation) purlins at oc spacing indicated, fastened to truss TC w/ 2-10d nails.
9) Truss Design Engineer: Julius Lee, PE: Florida P.E. License No. 34869: Address: 1109 Coastal Bay Blvd. Boynton Beach, FL 33435

LOAD CASE(S) Standard

Job	Truss	Truss Type	Qty	Ply	ADAM'S FRAMING - DUDDING RES.
L283727	T19	SPECIAL	1	1	L283727037 Job Reference (optional)

Builders FirstSource, Lake City, Fl 32055 — 6.300 s Apr 19 2006 MiTek Industries, Inc. Wed Jul 23 08:56:07 2008 Page 1

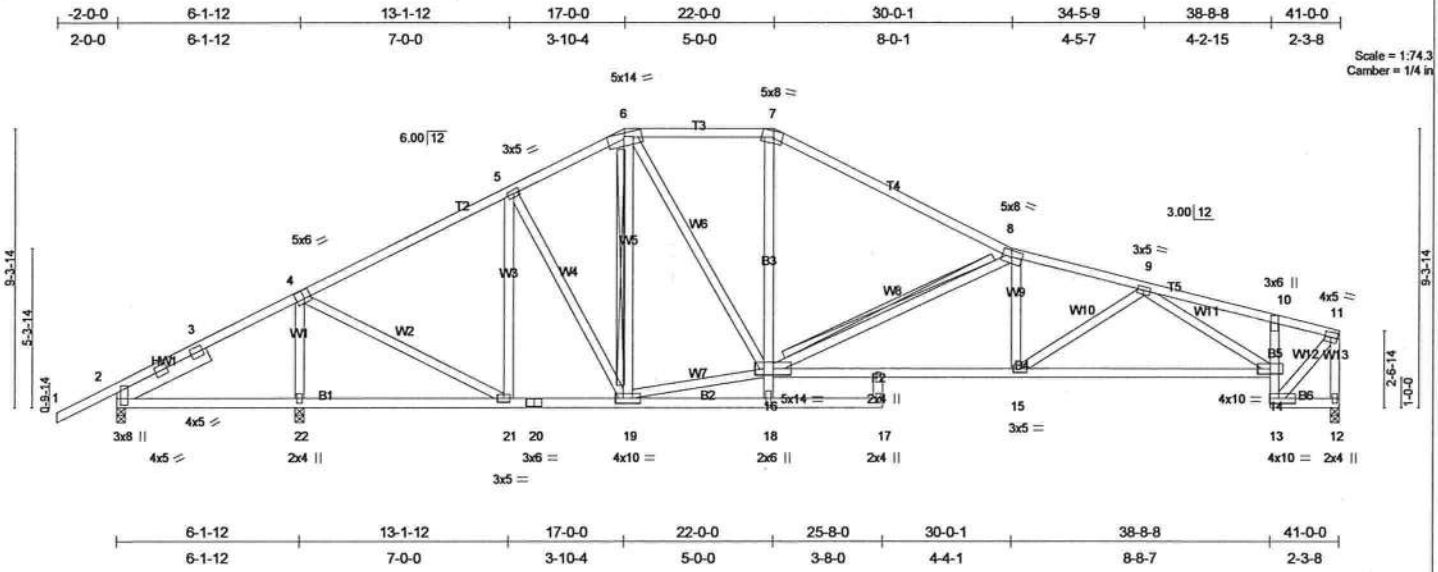

Plate Offsets (X,Y): [2:0-5-3,0-1-11], [4:0-2-12,0-3-4], [7:0-3-3,Edge]

LOADING (psf)			SPACING	2-0-0	CSI		DEFL	in	(loc)	l/defl	L/d	PLATES	GRIP
TCLL	20.0		Plates Increase	1.25	TC	0.48	Vert(LL)	-0.22	17	>999	360	MT20	244/190
TCDL	7.0		Lumber Increase	1.25	BC	0.99	Vert(TL)	-0.45	17	>918	240		
BCLL	10.0	*	Rep Stress Incr	YES	WB	0.54	Horz(TL)	0.17	12	n/a	n/a		
BCDL	5.0		Code FBC2004/TPI2002		(Matrix)							Weight: 273 lb	

LUMBER
TOP CHORD 2 X 4 SYP No.2
BOT CHORD 2 X 4 SYP No.2 *Except*
B3 2 X 4 SYP No.3
WEBS 2 X 4 SYP No.3
SLIDER Left 2 X 6 SYP No.1D 3-5-6

BRACING
TOP CHORD Structural wood sheathing directly applied or 3-10-15 oc purlins, except end verticals, and 2-0-0 oc purlins (5-5-4 max.): 6-7.
BOT CHORD Rigid ceiling directly applied or 2-2-0 oc bracing.
WEBS T-Brace: 2 X 4 SYP No.3 - 6-19, 8-16
Fasten T and I braces to narrow edge of web with 10d Common wire nails, 9in o.c. ,with 4in minimum end distance.
Brace must cover 90% of web length.

REACTIONS (lb/size) 2=36/0-3-8, 12=1079/0-3-8, 22=1646/0-3-8
Max Horz 2=178(load case 6)
Max Uplift2=-189(load case 6), 12=-238(load case 7), 22=-350(load case 6)
Max Grav 2=167(load case 10), 12=1079(load case 1), 22=1646(load case 1)

FORCES (lb) - Maximum Compression/Maximum Tension
TOP CHORD 1-2=0/26, 2-3=-210/504, 3-4=-193/550, 4-5=-895/557, 5-6=-971/702, 6-7=-1138/797, 7-8=-1378/803, 8-9=-2128/1205, 9-10=-1233/698, 10-11=-821/459, 11-12=-1214/673
BOT CHORD 2-22=-434/140, 21-22=-410/121, 20-21=-326/720, 19-20=-326/720, 18-19=-201/0, 17-18=0/0, 16-18=0/204, 7-16=-44/335, 15-16=-1068/2046, 14-15=-1033/1909, 13-14=-703/411, 10-14=-179/165, 12-13=-7/16
WEBS 4-22=-1555/892, 4-21=-504/1230, 5-21=-521/295, 5-19=-44/317, 6-19=-383/40, 16-19=-221/833, 6-16=-274/672, 8-16=-1000/670, 8-15=-3/163, 9-15=-40/197, 9-14=-893/499, 11-13=-633/1134

JOINT STRESS INDEX
2 = 0.79, 2 = 0.14, 2 = 0.14, 3 = 0.00, 4 = 0.74, 5 = 0.48, 6 = 0.35, 7 = 0.87, 8 = 0.74, 9 = 0.44, 10 = 0.87, 11 = 0.59, 12 = 0.44, 13 = 0.72, 14 = 0.51, 15 = 0.40, 16 = 0.37, 17 = 0.34, 18 = 0.77, 19 = 0.45, 20 = 0.24, 21 = 0.82, 22 = 0.57 and 23 = 0.34

NOTES (8)
1) Unbalanced roof live loads have been considered for this design.
2) Wind: ASCE 7-02; 110mph (3-second gust); h=16ft; TCDL=4.2psf; BCDL=3.0psf; Category II; Exp B; enclosed; MWFRS and C-C Exterior(2) zone; porch left exposed; Lumber DOL=1.60 plate grip DOL=1.60. This truss is designed for C-C for members and forces, and for MWFRS for reactions specified.
3) Provide adequate drainage to prevent water ponding.
4) *This truss has been designed for a 10.0 psf bottom chord live load nonconcurrent with any other live loads.
5) All bearings are assumed to be SYP No.2 crushing capacity of 565.00 psi
6) Provide mechanical connection (by others) of truss to bearing plate capable of withstanding 189 lb uplift at joint 2, 238 lb uplift at joint 12 and 350 lb uplift at joint 22.
7) Design assumes 4x2 (flat orientation) purlins at oc spacing indicated, fastened to truss TC w/ 2-10d nails.
8) Truss Design Engineer: Julius Lee, PE: Florida P.E. License No. 34869: Address: 1109 Coastal Bay Blvd. Boynton Beach, FL 33435

LOAD CASE(S) Standard

Job	Truss	Truss Type	Qty	Ply	ADAM'S FRAMING - DUDDING RES.
L283727	T20	SPECIAL	2	1	L283727038 Job Reference (optional)

Builders FirstSource, Lake City, Fl 32055 — 6.300 s Apr 19 2006 MiTek Industries, Inc. Wed Jul 23 08:56:08 2008 Page 1

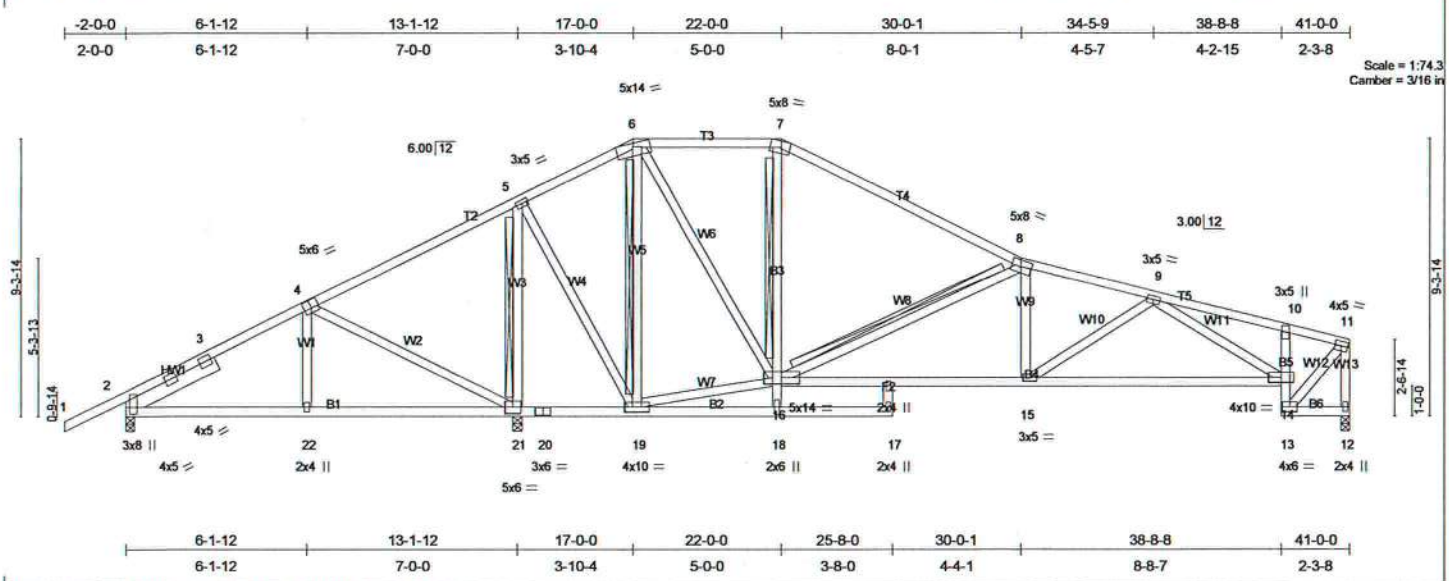

Plate Offsets (X,Y): [2:0-5-3,0-1-11], [4:0-3-0,0-3-4], [7:0-3-3,Edge]

LOADING (psf)		SPACING 2-0-0	CSI	DEFL in (loc) l/defl L/d	PLATES GRIP
TCLL 20.0		Plates Increase 1.25	TC 0.42	Vert(LL) -0.18 17 >999 360	MT20 244/190
TCDL 7.0		Lumber Increase 1.25	BC 0.73	Vert(TL) -0.35 17 >952 240	
BCLL 10.0	*	Rep Stress Incr YES	WB 0.58	Horz(TL) 0.11 12 n/a n/a	
BCDL 5.0		Code FBC2004/TPI2002	(Matrix)		Weight: 273 lb

LUMBER
TOP CHORD 2 X 4 SYP No.2
BOT CHORD 2 X 4 SYP No.2 *Except*
B3 2 X 4 SYP No.3
WEBS 2 X 4 SYP No.3
SLIDER Left 2 X 6 SYP No.1D 3-5-6

BRACING
TOP CHORD Structural wood sheathing directly applied or 5-0-10 oc purlins, except end verticals, and 2-0-0 oc purlins (6-0-0 max.): 6-7.
BOT CHORD Rigid ceiling directly applied or 6-0-0 oc bracing. Except:
T-Brace: 2 X 4 SYP No.3 - 7-16
WEBS T-Brace: 2 X 4 SYP No.3 - 5-21, 6-19, 8-16
Fasten T and I braces to narrow edge of web with 10d Common wire nails, 9in o.c. ,with 4in minimum end distance.
Brace must cover 90% of web length.

REACTIONS (lb/size) 2=262/0-3-8, 12=771/0-3-8, 21=1728/0-3-8
Max Horz 2=178(load case 6)
Max Uplift2=-284(load case 6), 12=-173(load case 7), 21=-495(load case 6)
Max Grav 2=388(load case 10), 12=773(load case 11), 21=1728(load case 1)

FORCES (lb) - Maximum Compression/Maximum Tension
TOP CHORD 1-2=0/26, 2-3=-286/293, 3-4=-135/313, 4-5=-304/615, 5-6=-121/128, 6-7=-416/334, 7-8=-576/289, 8-9=-1281/662, 9-10=-894/481, 10-11=-582/305, 11-12=-866/450
BOT CHORD 2-22=-251/175, 21-22=-253/173, 20-21=-478/417, 19-20=-478/417, 18-19=-227/0, 17-18=0/0, 16-18=0/202, 7-16=-182/188, 15-16=-539/1221, 14-15=-606/1243, 13-14=-491/275, 10-14=-186/172, 12-13=-4/12
WEBS 4-22=-246/210, 4-21=-498/686, 5-21=-1429/825, 5-19=-436/990, 6-19=-846/383, 16-19=0/304, 6-16=-388/802, 8-16=-880/593, 8-15=-21/240, 9-15=-23/129, 9-14=-487/239, 11-13=-417/798

JOINT STRESS INDEX
2 = 0.79, 2 = 0.14, 2 = 0.14, 3 = 0.00, 4 = 0.70, 5 = 0.83, 6 = 0.38, 7 = 0.86, 8 = 0.78, 9 = 0.44, 10 = 0.80, 11 = 0.42, 12 = 0.34, 13 = 0.65, 14 = 0.49, 15 = 0.40, 16 = 0.45, 17 = 0.34, 18 = 0.85, 19 = 0.70, 20 = 0.29, 21 = 0.25, 22 = 0.34 and 23 = 0.34

NOTES (8)
1) Unbalanced roof live loads have been considered for this design.
2) Wind: ASCE 7-02; 110mph (3-second gust); h=16ft; TCDL=4.2psf; BCDL=3.0psf; Category II; Exp B; enclosed; MWFRS and C-C Exterior(2) zone; porch left exposed; Lumber DOL=1.60 plate grip DOL=1.60. This truss is designed for C-C for members and forces, and for MWFRS for reactions specified.
3) Provide adequate drainage to prevent water ponding.
4) *This truss has been designed for a 10.0 psf bottom chord live load nonconcurrent with any other live loads.
5) All bearings are assumed to be SYP No.2 crushing capacity of 565.00 psi
6) Provide mechanical connection (by others) of truss to bearing plate capable of withstanding 284 lb uplift at joint 2, 173 lb uplift at joint 12 and 495 lb uplift at joint 21.
7) Design assumes 4x2 (flat orientation) purlins at oc spacing indicated, fastened to truss TC w/ 2-10d nails.
8) Truss Design Engineer: Julius Lee, PE: Florida P.E. License No. 34869: Address: 1109 Coastal Bay Blvd. Boynton Beach, FL 33435

LOAD CASE(S) Standard

Job	Truss	Truss Type	Qty	Ply	ADAM'S FRAMING - DUDDING RES.
L283727	T21	COMMON	3	1	L283727039 Job Reference (optional)

Builders FirstSource, Lake City, Fl 32055 — 6.300 s Apr 19 2006 MiTek Industries, Inc. Wed Jul 23 08:56:09 2008 Page 1

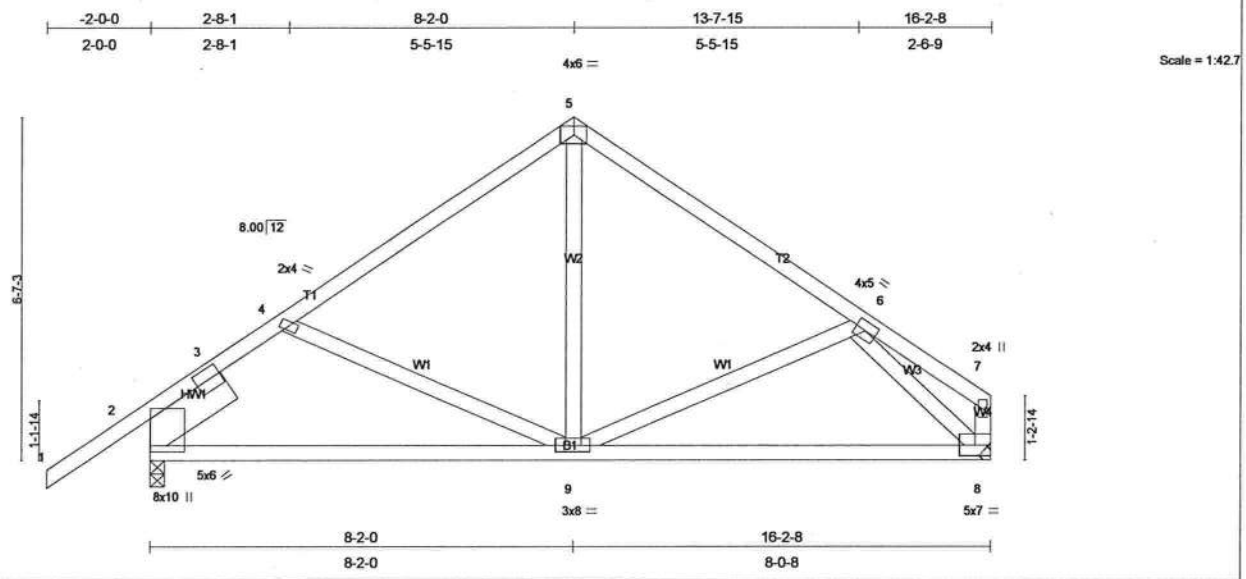

Plate Offsets (X,Y): [2:0-7-10,0-0-3]

LOADING (psf)		SPACING 2-0-0	CSI	DEFL in (loc) l/defl L/d	PLATES GRIP
TCLL 20.0		Plates Increase 1.25	TC 0.66	Vert(LL) 0.16 8-9 >999 360	MT20 244/190
TCDL 7.0		Lumber Increase 1.25	BC 0.32	Vert(TL) -0.09 8-9 >999 240	
BCLL 10.0	*	Rep Stress Incr YES	WB 0.37	Horz(TL) -0.01 8 n/a n/a	
BCDL 5.0		Code FBC2004/TPI2002	(Matrix)		Weight: 95 lb

LUMBER
TOP CHORD 2 X 4 SYP No.2
BOT CHORD 2 X 4 SYP No.2
WEBS 2 X 4 SYP No.3
SLIDER Left 2 X 8 SYP No.1D 1-11-1

BRACING
TOP CHORD Structural wood sheathing directly applied or 6-0-0 oc purlins, except end verticals.
BOT CHORD Rigid ceiling directly applied or 8-5-3 oc bracing.

REACTIONS (lb/size) 2=629/0-3-8, 8=507/Mechanical
Max Horz 2=199(load case 5)
Max Uplift2=-396(load case 6), 8=-304(load case 7)

FORCES (lb) - Maximum Compression/Maximum Tension
TOP CHORD 1-2=0/26, 2-3=-624/705, 3-4=-575/737, 4-5=-500/695, 5-6=-504/697, 6-7=-188/370, 7-8=-115/224
BOT CHORD 2-9=-505/419, 8-9=-490/420
WEBS 4-9=-117/138, 5-9=-532/253, 6-9=-123/126, 6-8=-533/374

JOINT STRESS INDEX
2 = 0.86, 2 = 0.25, 3 = 0.00, 4 = 0.34, 5 = 0.65, 6 = 0.38, 7 = 0.42, 8 = 0.65 and 9 = 0.57

NOTES (6-7)
1) Unbalanced roof live loads have been considered for this design.
2) Wind: ASCE 7-02; 110mph (3-second gust); h=16ft; TCDL=4.2psf; BCDL=3.0psf; Category II; Exp B; enclosed; MWFRS and C-C Exterior(2) zone; end vertical left and right exposed; porch left and right exposed; Lumber DOL=1.60 plate grip DOL=1.60. This truss is designed for C-C for members and forces, and for MWFRS for reactions specified.
3) *This truss has been designed for a 10.0 psf bottom chord live load nonconcurrent with any other live loads.
4) All bearings are assumed to be SYP No.2 crushing capacity of 565.00 psi
5) Provide mechanical connection (by others) of truss to bearing plate capable of withstanding 396 lb uplift at joint 2 and 304 lb uplift at joint 8.
6) Truss Design Engineer: Julius Lee, PE: Florida P.E. License No. 34869: Address: 1109 Coastal Bay Blvd. Boynton Beach, FL 33435
7) Use Simpson HTU26 to attach Truss to Carrying member

LOAD CASE(S) Standard

Job	Truss	Truss Type	Qty	Ply	ADAM'S FRAMING - DUDDING RES.
L283727	T21G	GABLE	1	1	L283727040 Job Reference (optional)

Builders FirstSource, Lake City, Fl 32055

6.300 s Apr 19 2006 MiTek Industries, Inc. Wed Jul 23 08:56:10 2008 Page 1

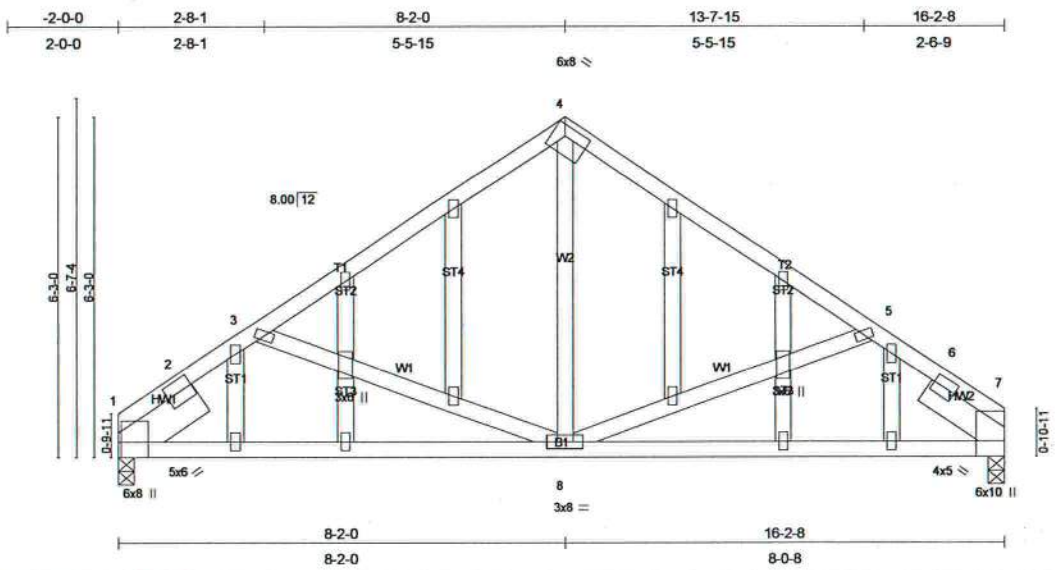

Plate Offsets (X,Y): [1:0-3-8,Edge], [4:0-5-4,0-2-4]

LOADING (psf)		SPACING 2-0-0	CSI	DEFL in (loc) l/defl L/d	PLATES GRIP
TCLL 20.0		Plates Increase 1.25	TC 0.70	Vert(LL) 0.18 1-8 >999 360	MT20 244/190
TCDL 7.0		Lumber Increase 1.25	BC 0.38	Vert(TL) -0.11 1-8 >999 240	
BCLL 10.0	*	Rep Stress Incr NO	WB 0.45	Horz(TL) -0.04 7 n/a n/a	
BCDL 5.0		Code FBC2004/TPI2002	(Matrix)		Weight: 113 lb

LUMBER
TOP CHORD 2 X 4 SYP No.2
BOT CHORD 2 X 4 SYP No.2
WEBS 2 X 4 SYP No.3
OTHERS 2 X 4 SYP No.3
SLIDER Left 2 X 8 SYP No.1D 1-8-12, Right 2 X 6 SYP No.1D 1-8-8

BRACING
TOP CHORD Structural wood sheathing directly applied or 4-7-10 oc purlins.
BOT CHORD Rigid ceiling directly applied or 5-1-7 oc bracing.

REACTIONS (lb/size) 1=1005/0-3-8, 7=1005/0-3-8
Max Horz 1=-206(load case 4)
Max Uplift1=-849(load case 6), 7=-848(load case 7)

FORCES (lb) - Maximum Compression/Maximum Tension
TOP CHORD 1-2=-1423/1801, 2-3=-1330/1725, 3-4=-1066/1442, 4-5=-1066/1442, 5-6=-1300/1726, 6-7=-1392/1760
BOT CHORD 1-8=-1381/1057, 7-8=-1326/1016
WEBS 3-8=-365/466, 4-8=-735/355, 5-8=-325/408

JOINT STRESS INDEX
1 = 0.63, 1 = 0.66, 2 = 0.00, 3 = 0.34, 4 = 0.97, 5 = 0.34, 6 = 0.00, 7 = 0.61, 7 = 0.77, 8 = 0.57, 9 = 0.34, 10 = 0.34, 11 = 0.47, 12 = 0.34, 13 = 0.34, 14 = 0.34, 15 = 0.34, 16 = 0.34, 17 = 0.34, 18 = 0.34, 19 = 0.34, 20 = 0.47, 21 = 0.34 and 22 = 0.34

NOTES (10-11)
1) Unbalanced roof live loads have been considered for this design.
2) Wind: ASCE 7-02; 110mph (3-second gust); h=16ft; TCDL=4.2psf; BCDL=3.0psf; Category II; Exp B; enclosed; MWFRS gable end zone and C-C Exterior(2) zone; end vertical left and right exposed; porch left and right exposed; Lumber DOL=1.60 plate grip DOL=1.60. This truss is designed for C-C for members and forces, and for MWFRS for reactions specified.
3) Truss designed for wind loads in the plane of the truss only. For studs exposed to wind (normal to the face), see MiTek "Standard Gable End Detail"
4) *This truss has been designed for a 10.0 psf bottom chord live load nonconcurrent with any other live loads.
5) All plates are 2x4 MT20 unless otherwise indicated.
6) Gable studs spaced at 2-0-0 oc.
7) All bearings are assumed to be SYP No.2 crushing capacity of 565.00 psi
8) Provide mechanical connection (by others) of truss to bearing plate capable of withstanding 849 lb uplift at joint 1 and 848 lb uplift at joint 7.
9) In the LOAD CASE(S) section, loads applied to the face of the truss are noted as front (F) or back (B).
10) Truss Design Engineer: Julius Lee, PE: Florida P.E. License No. 34869: Address: 1109 Coastal Bay Blvd. Boynton Beach, FL 33435
11) Use Simpson HTU26 to attach Truss to Carrying member

LOAD CASE(S) Standard
1) Regular: Lumber Increase=1.25, Plate Increase=1.25
Uniform Loads (plf)
Vert: 1-4=-114(F=-60), 4-7=-114(F=-60), 1-7=-10

Job	Truss	Truss Type	Qty	Ply	ADAM'S FRAMING - DUDDING RES.
L283727	T22	COMMON	3	1	L283727041 Job Reference (optional)

Builders FirstSource, Lake City, Fl 32055

6.300 s Apr 19 2006 MiTek Industries, Inc. Wed Jul 23 08:56:11 2008 Page 1

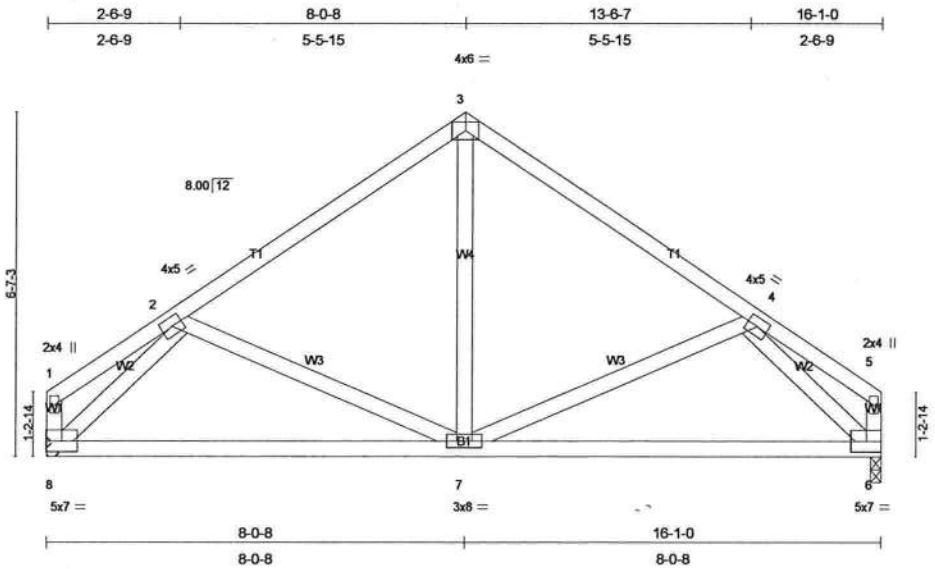

Plate Offsets (X,Y): [4:0-0-0,0-0-0], [5:0-0-0,0-0-0]

LOADING (psf)			SPACING 2-0-0	CSI		DEFL	in	(loc)	l/defl	L/d	PLATES	GRIP
TCLL	20.0		Plates Increase 1.25	TC	0.66	Vert(LL)	0.16	7-8	>999	360	MT20	244/190
TCDL	7.0		Lumber Increase 1.25	BC	0.31	Vert(TL)	-0.09	7-8	>999	240		
BCLL	10.0	*	Rep Stress Incr YES	WB	0.37	Horz(TL)	-0.01	6	n/a	n/a		
BCDL	5.0		Code FBC2004/TPI2002	(Matrix)							Weight: 91 lb	

LUMBER
TOP CHORD 2 X 4 SYP No.2
BOT CHORD 2 X 4 SYP No.2
WEBS 2 X 4 SYP No.3

BRACING
TOP CHORD Structural wood sheathing directly applied or 6-0-0 oc purlins, except end verticals.
BOT CHORD Rigid ceiling directly applied or 8-6-11 oc bracing.

REACTIONS (lb/size) 8=505/Mechanical, 6=505/0-2-8
Max Horz 8=187(load case 5)
Max Uplift8=-300(load case 6), 6=-300(load case 7)

FORCES (lb) - Maximum Compression/Maximum Tension
TOP CHORD 1-2=-187/366, 2-3=-501/691, 3-4=-501/691, 4-5=-187/365, 1-8=-115/221, 5-6=-114/220
BOT CHORD 7-8=-487/420, 6-7=-487/419
WEBS 2-7=-126/126, 3-7=-531/248, 4-7=-125/127, 2-8=-538/373, 4-6=-538/374

JOINT STRESS INDEX
1 = 0.41, 2 = 0.38, 3 = 0.63, 4 = 0.38, 5 = 0.41, 6 = 0.64, 7 = 0.57 and 8 = 0.64

NOTES (7-8)
1) Unbalanced roof live loads have been considered for this design.
2) Wind: ASCE 7-02; 110mph (3-second gust); h=16ft; TCDL=4.2psf; BCDL=3.0psf; Category II; Exp B; enclosed; MWFRS and C-C Exterior(2) zone; end vertical left and right exposed; porch left and right exposed; Lumber DOL=1.60 plate grip DOL=1.60. This truss is designed for C-C for members and forces, and for MWFRS for reactions specified.
3) *This truss has been designed for a 10.0 psf bottom chord live load nonconcurrent with any other live loads.
4) All bearings are assumed to be SYP No.2 crushing capacity of 565.00 psi
5) Provide mechanical connection (by others) of truss to bearing plate at joint(s) 6.
6) Provide mechanical connection (by others) of truss to bearing plate capable of withstanding 300 lb uplift at joint 8 and 300 lb uplift at joint 6.
7) Truss Design Engineer: Julius Lee, PE: Florida P.E. License No. 34869: Address: 1109 Coastal Bay Blvd. Boynton Beach, FL 33435
8) Use Simpson HTU26 to attach Truss to Carrying member

LOAD CASE(S) Standard

Job	Truss	Truss Type	Qty	Ply	ADAM'S FRAMING - DUDDING RES.
L283727	T23	MONO TRUSS	5	1	L283727042 Job Reference (optional)

Builders FirstSource, Lake City, Fl 32055

6.300 s Apr 19 2006 MiTek Industries, Inc. Wed Jul 23 08:56:11 2008 Page 1

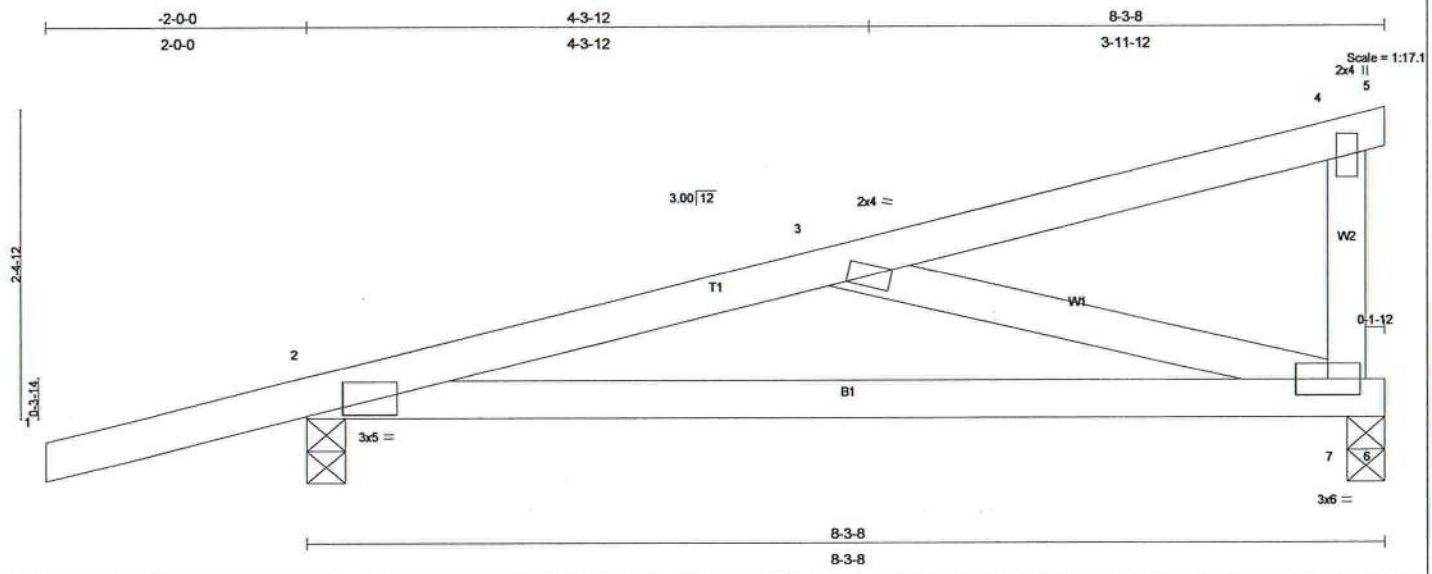

Plate Offsets (X,Y): [2:0-1-12,0-1-8]

LOADING (psf)			SPACING 2-0-0	CSI		DEFL	in	(loc)	l/defl	L/d	PLATES	GRIP
TCLL	20.0		Plates Increase 1.25	TC	0.50	Vert(LL)	-0.07	2-7	>999	360	MT20	244/190
TCDL	7.0		Lumber Increase 1.25	BC	0.22	Vert(TL)	-0.12	2-7	>761	240		
BCLL	10.0	*	Rep Stress Incr YES	WB	0.12	Horz(TL)	0.01	7	n/a	n/a		
BCDL	5.0		Code FBC2004/TPI2002	(Matrix)							Weight: 37 lb	

LUMBER
TOP CHORD 2 X 4 SYP No.2
BOT CHORD 2 X 4 SYP No.2
WEBS 2 X 4 SYP No.3

BRACING
TOP CHORD Structural wood sheathing directly applied or 6-0-0 oc purlins, except end verticals.
BOT CHORD Rigid ceiling directly applied or 10-0-0 oc bracing.

REACTIONS (lb/size) 7=243/0-3-8, 2=383/0-3-8
Max Horz 2=83(load case 5)
Max Uplift7=-63(load case 4), 2=-170(load case 6)

FORCES (lb) - Maximum Compression/Maximum Tension
TOP CHORD 1-2=0/25, 2-3=-481/351, 3-4=-92/30, 4-5=-1/0, 4-7=-102/106
BOT CHORD 2-7=-331/438, 6-7=0/0
WEBS 3-7=-398/375

JOINT STRESS INDEX
2 = 0.83, 3 = 0.20, 4 = 0.70 and 7 = 0.65

NOTES (5)
1) Wind: ASCE 7-02; 110mph (3-second gust); h=16ft; TCDL=4.2psf; BCDL=3.0psf; Category II; Exp B; enclosed; MWFRS and C-C Exterior(2) zone; end vertical left and right exposed; Lumber DOL=1.60 plate grip DOL=1.60. This truss is designed for C-C for members and forces, and for MWFRS for reactions specified.
2) *This truss has been designed for a 10.0 psf bottom chord live load nonconcurrent with any other live loads.
3) All bearings are assumed to be SYP No.2 crushing capacity of 565.00 psi
4) Provide mechanical connection (by others) of truss to bearing plate capable of withstanding 63 lb uplift at joint 7 and 170 lb uplift at joint 2.
5) Truss Design Engineer: Julius Lee, PE: Florida P.E. License No. 34869: Address: 1109 Coastal Bay Blvd. Boynton Beach, FL 33435

LOAD CASE(S) Standard

Job	Truss	Truss Type	Qty	Ply	ADAM'S FRAMING - DUDDING RES.
L283727	T24	MONO TRUSS	3	1	L283727043 Job Reference (optional)

Builders FirstSource, Lake City, Fl 32055 — 6.300 s Apr 19 2006 MiTek Industries, Inc. Wed Jul 23 08:56:12 2008 Page 1

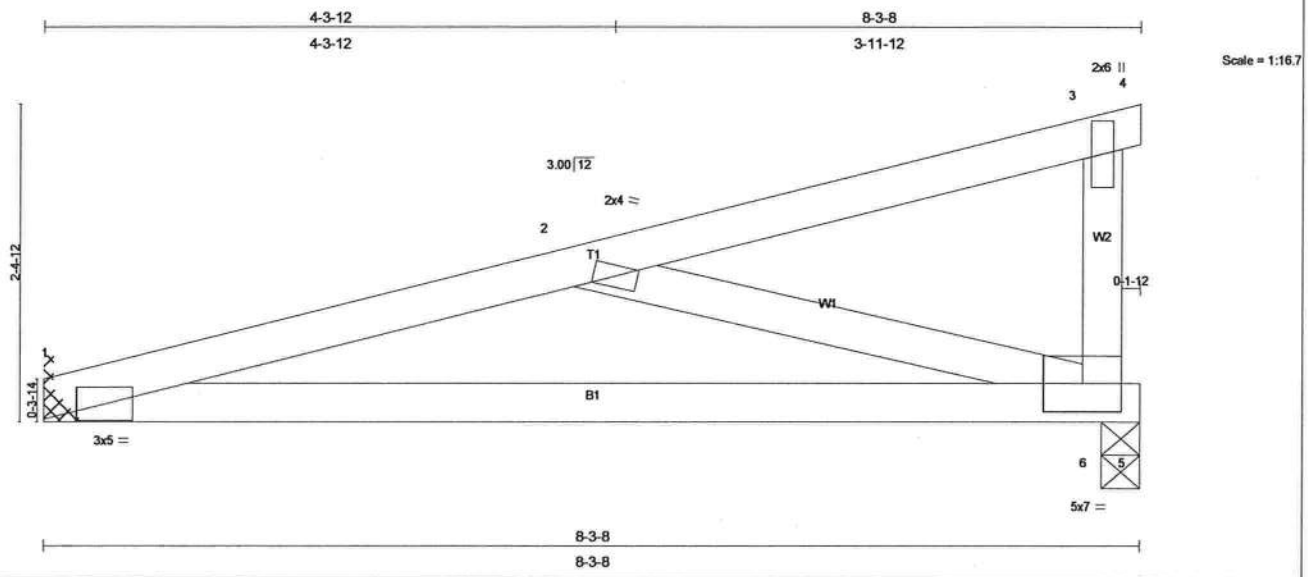

Plate Offsets (X,Y): [1:0-3-0,0-0-2]

LOADING (psf)			SPACING 2-0-0	CSI		DEFL	in	(loc)	l/defl	L/d	PLATES	GRIP
TCLL	20.0		Plates Increase 1.25	TC	0.79	Vert(LL)	0.24	1-6	>390	360	MT20	244/190
TCDL	7.0		Lumber Increase 1.25	BC	0.29	Vert(TL)	-0.13	1-6	>710	240		
BCLL	10.0	*	Rep Stress Incr YES	WB	0.15	Horz(TL)	-0.01	6	n/a	n/a		
BCDL	5.0		Code FBC2004/TPI2002	(Matrix)							Weight: 34 lb	

LUMBER
TOP CHORD 2 X 4 SYP No.2
BOT CHORD 2 X 4 SYP No.2
WEBS 2 X 4 SYP No.3

BRACING
TOP CHORD Structural wood sheathing directly applied or 6-0-0 oc purlins, except end verticals.
BOT CHORD Rigid ceiling directly applied or 6-9-3 oc bracing.

REACTIONS (lb/size) 1=251/Mechanical, 6=258/0-3-8
Max Horz 1=67(load case 4)
Max Uplift1=-159(load case 4), 6=-180(load case 4)

FORCES (lb) - Maximum Compression/Maximum Tension
TOP CHORD 1-2=-536/664, 2-3=-94/157, 3-4=-1/0, 3-6=-96/68
BOT CHORD 1-6=-750/502, 5-6=0/0
WEBS 2-6=-457/589

JOINT STRESS INDEX
1 = 0.71, 2 = 0.27, 3 = 0.56 and 6 = 0.83

NOTES (5-6)
1) Wind: ASCE 7-02; 110mph (3-second gust); h=16ft; TCDL=4.2psf; BCDL=3.0psf; Category II; Exp B; enclosed; MWFRS and C-C Exterior(2) zone; porch left and right exposed; Lumber DOL=1.60 plate grip DOL=1.60. This truss is designed for C-C for members and forces, and for MWFRS for reactions specified.
2) *This truss has been designed for a 10.0 psf bottom chord live load nonconcurrent with any other live loads.
3) All bearings are assumed to be SYP No.2 crushing capacity of 565.00 psi
4) Provide mechanical connection (by others) of truss to bearing plate capable of withstanding 159 lb uplift at joint 1 and 180 lb uplift at joint 6.
5) Truss Design Engineer: Julius Lee, PE: Florida P.E. License No. 34869: Address: 1109 Coastal Bay Blvd. Boynton Beach, FL 33435
6) Use Simpson HTU26 to attach Truss to Carrying member

LOAD CASE(S) Standard

Job	Truss	Truss Type	Qty	Ply	ADAM'S FRAMING - DUDDING RES.
L283727	T25	MONO HIP	1	1	L283727044 Job Reference (optional)

Builders FirstSource, Lake City, Fl 32055 — 6.300 s Apr 19 2006 MiTek Industries, Inc. Wed Jul 23 08:56:13 2008 Page 1

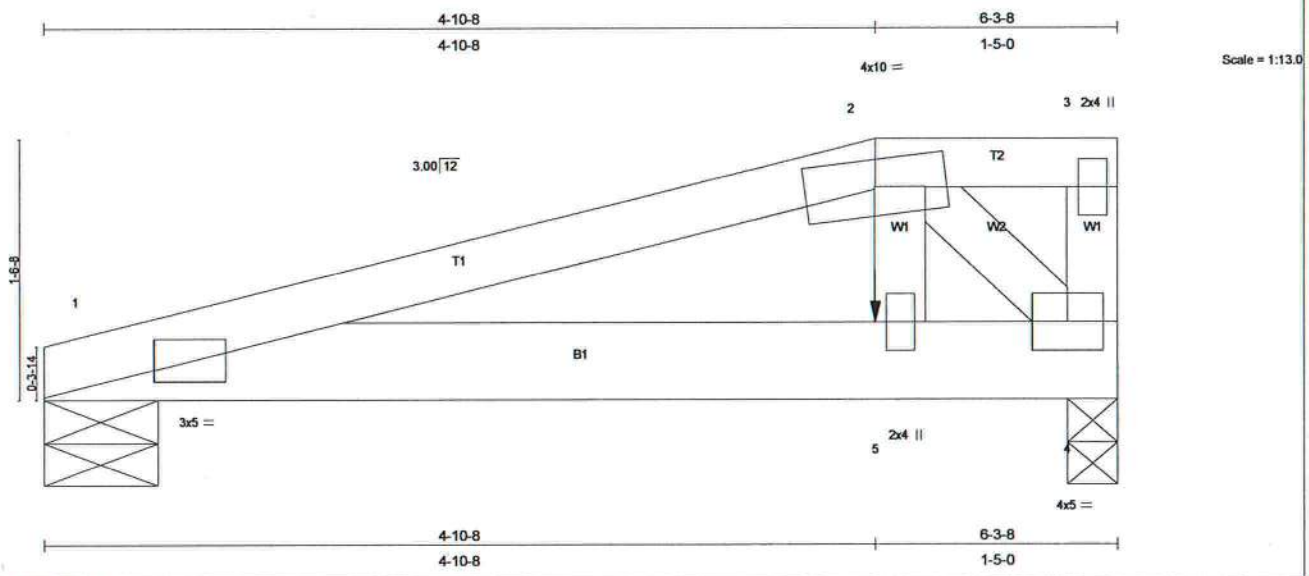

Plate Offsets (X,Y): [1:0-2-4,0-1-8]

LOADING (psf)		SPACING 2-0-0	CSI		DEFL	in	(loc)	l/defl	L/d	PLATES	GRIP
TCLL	20.0	Plates Increase 1.25	TC	0.30	Vert(LL)	-0.02	1-5	>999	360	MT20	244/190
TCDL	7.0	Lumber Increase 1.25	BC	0.23	Vert(TL)	-0.03	1-5	>999	240		
BCLL	10.0 *	Rep Stress Incr NO	WB	0.20	Horz(TL)	0.00	4	n/a	n/a		
BCDL	5.0	Code FBC2004/TPI2002	(Matrix)							Weight: 28 lb	

LUMBER
TOP CHORD 2 X 4 SYP No.2
BOT CHORD 2 X 6 SYP No.1D
WEBS 2 X 4 SYP No.3

BRACING
TOP CHORD Structural wood sheathing directly applied or 6-0-0 oc purlins, except end verticals.
BOT CHORD Rigid ceiling directly applied or 10-0-0 oc bracing.

REACTIONS (lb/size) 1=505/0-8-0, 4=653/0-3-8
Max Horz 1=37(load case 3)
Max Uplift1=-210(load case 3), 4=-264(load case 3)

FORCES (lb) - Maximum Compression/Maximum Tension
TOP CHORD 1-2=-661/248, 2-3=-0/0, 3-4=-56/26
BOT CHORD 1-5=-255/617, 4-5=-286/694
WEBS 2-5=-249/619, 2-4=-941/388

JOINT STRESS INDEX
1 = 0.28, 2 = 0.84, 3 = 0.03, 4 = 0.26 and 5 = 0.45

NOTES (10)
1) Wind: ASCE 7-02; 110mph (3-second gust); h=16ft; TCDL=4.2psf; BCDL=3.0psf; Category II; Exp B; enclosed; MWFRS; porch left and right exposed; Lumber DOL=1.60 plate grip DOL=1.60.
2) Provide adequate drainage to prevent water ponding.
3) *This truss has been designed for a 10.0 psf bottom chord live load nonconcurrent with any other live loads.
4) All bearings are assumed to be SYP No.2 crushing capacity of 565.00 psi
5) Provide mechanical connection (by others) of truss to bearing plate capable of withstanding 210 lb uplift at joint 1 and 264 lb uplift at joint 4.
6) Girder carries tie-in span(s): 8-3-8 from 0-0-0 to 6-3-8
7) Girder carries hip end with 0-0-0 right side setback, 4-10-8 left side setback, and 4-10-8 end setback.
8) Hanger(s) or other connection device(s) shall be provided sufficient to support concentrated load(s) 176 lb down and 54 lb up at 4-10-8 on bottom chord. The design/selection of such connection device(s) is the responsibility of others.
9) In the LOAD CASE(S) section, loads applied to the face of the truss are noted as front (F) or back (B).
10) Truss Design Engineer: Julius Lee, PE: Florida P.E. License No. 34869: Address: 1109 Coastal Bay Blvd. Boynton Beach, FL 33435

LOAD CASE(S) Standard
1) Regular: Lumber Increase=1.25, Plate Increase=1.25
Uniform Loads (plf)
Vert: 1-2=-54, 2-3=-89(F=-35), 1-5=-106(B=-96), 4-5=-112(F=-6, B=-96)
Concentrated Loads (lb)
Vert: 5=-176(F)

STEPDOWN CORNER SET

TOP CHORD 2X4 SO. PINE #2 or Better
BOT CHORD 2X4 SO. PINE #2 or Better
WEBS 2X4 SO. PINE #3 or Better

120 MPH MAX

Setback 7' or Less

PROVIDE UPLIFT CONNECTIONS AT BEARINGS AS INDICATED.
UPLIFT: 400# or Less
BRG LOC: *
UPLIFT BASED ON 7.2 PSF TOTAL DEAD LOAD. WIND SPEED=120 "C" MPH. MEAN HGT=28 FT. ENCLOSED. (ASCE 7-02)

PROVIDE UPLIFT CONNECTIONS AT BEARINGS AS INDICATED. TILE
UPLIFT: 400# or Less
BRG LOC: *
UPLIFT BASED ON 15.0 PSF TOTAL DEAD LOAD. WIND SPEED=120 "C" MPH. MEAN HGT (of jacks)=28 FT. ENCLOSED. (ASCE 7-02)

PROVIDE UPLIFT CONNECTIONS AT BEARINGS AS INDICATED.
UPLIFT: 400# or Less
BRG LOC: *
UPLIFT BASED ON 7.2 PSF TOTAL DEAD LOAD. WIND SPEED=120 "B" MPH. MEAN HGT (of jacks)=28 FT. ENCLOSED. (ASCE 7-02)

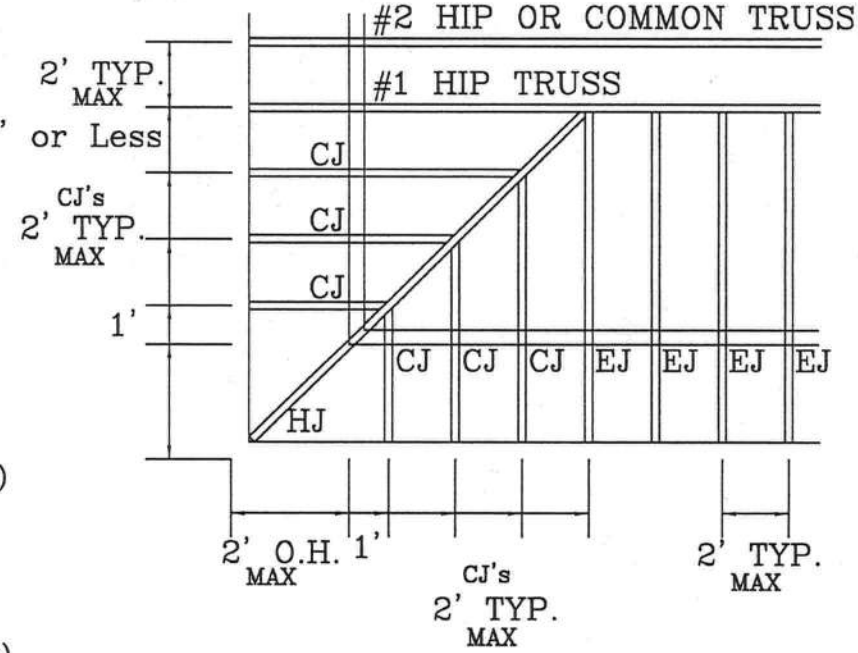

* (3) 16d TOENAILS

** SEE EOR FOR TIE DOWN

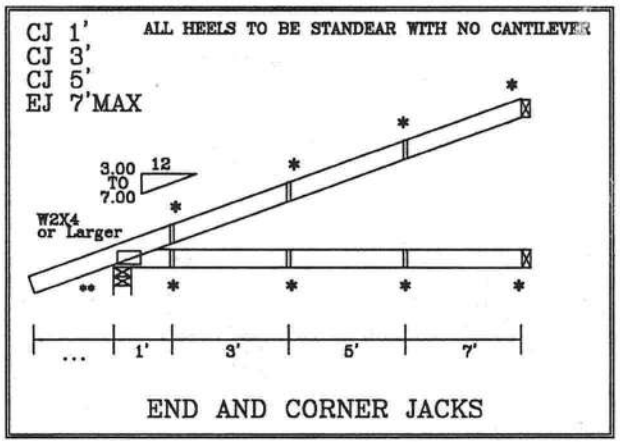

END AND CORNER JACKS

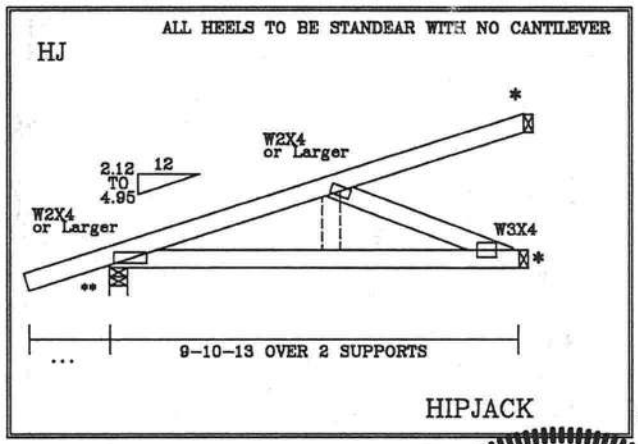

HIPJACK

UPLIFT VALUES DO TAKE INTO ACCOUNT PORCHES EXPOSED
BC LIVE LOAD IS NON CONCURRENT 10*

CORNER SET SETBACK
7'0" MAX

WARNING TRUSSES REQUIRE EXTREME CARE IN FABRICATING, HANDLING, SHIPPING, INSTALLING AND BRACING. REFER TO BCSI 1-03 (BUILDING COMPONENT SAFETY INFORMATION), PUBLISHED BY TPI (TRUSS PLATE INSTITUTE, 583 D'ONOFRIO DR., SUITE 200, MADISON, WI. 53719) AND WTCA (WOOD TRUSS COUNCIL OF AMERICA, 6300 ENTERPRISE LN, MADISON, WI 53719) FOR SAFETY PRACTICES PRIOR TO PERFORMING THESE FUNCTIONS. UNLESS OTHERWISE INDICATED, TOP CHORD SHALL HAVE PROPERLY ATTACHED STRUCTURAL PANELS AND BOTTOM CHORD SHALL HAVE A PROPERLY ATTACHED RIGID CEILING.

IMPORTANT FURNISH COPY OF THIS DESIGN TO INSTALLATION CONTRACTOR. ALPINE ENGINEERED PRODUCTS, INC., SHALL NOT BE RESPONSIBLE FOR ANY DEVIATION FROM THIS DESIGN; ANY FAILURE TO BUILD THE TRUSS IN CONFORMANCE WITH TPI; OR FABRICATING, HANDLING, SHIPPING, INSTALLING & BRACING OF TRUSSES. DESIGN CONFORMS WITH APPLICABLE PROVISIONS OF NDS (NATIONAL DESIGN SPEC. BY AF&PA) AND TPI. ALPINE CONNECTOR PLATES ARE MADE OF 20/18/16GA (W,H/S/K) ASTM A653 GRADE 40/60 (W,K/H,S) GALV. STEEL. APPLY PLATES TO EACH FACE OF TRUSS AND, UNLESS OTHERWISE LOCATED ON THIS DESIGN, POSITION PER DRAWINGS 160A-Z. ANY INSPECTION OF PLATES FOLLOWED BY (I) SHALL BE PER ANNEX A3 OF TPI 1-2002 SEC. 3. A SEAL ON THIS DRAWING INDICATES ACCEPTANCE OF PROFESSIONAL ENGINEERING RESPONSIBILITY SOLELY FOR THE TRUSS COMPONENT DESIGN SHOWN. THE SUITABILITY AND USE OF THIS COMPONENT FOR ANY BUILDING IS THE RESPONSIBILITY OF THE BUILDING DESIGNER, PER ANSI/TPI 1 SEC. 2.

JULIUS LEE
CONS. ENGINEERS, P.A.
1455 SW 4th AVENUE
DELRAY BEACH, FL 33444-2101
NO. 54869
STATE OF FLORIDA
PROFESSIONAL ENGINEER

SHINGLE	TC LL	20	MAX PSF
	TC DL	7	MAX PSF
	BC LL	10*	MAX PSF
	BC DL	5	MAX PSF
TILE	TC LL	20	MAX PSF
	TC DL	20	MAX PSF
	BC LL	10*	MAX PSF
	BC DL	5	MAX PSF
DUR. FAC.		1.25	
SPACING		2' MAX	

REF	7'MAX STBK CS
DATE	Jun./27/2008
DRWG	
-ENG	

REVIEWED
By julius lee at 10:52 am, Jun 27, 2008

ASCE 7-02: 130 MPH WIND SPEED, 15' MEAN HEIGHT, ENCLOSED, I = 1.00, EXPOSURE C

MAX GABLE VERTICAL LENGTH

2X4 GABLE VERTICAL SPACING	SPECIES	BRACE / GRADE	NO BRACES	(1) 1X4 "L" BRACE * GROUP A	(1) 1X4 "L" BRACE * GROUP B	(1) 2X4 "L" BRACE * GROUP A	(1) 2X4 "L" BRACE * GROUP B	(2) 2X4 "L" BRACE ** GROUP A	(2) 2X4 "L" BRACE ** GROUP B	(1) 2X6 "L" BRACE * GROUP A	(1) 2X6 "L" BRACE * GROUP B	(2) 2X6 "L" BRACE ** GROUP A	(2) 2X6 "L" BRACE ** GROUP B
24" O.C.	SPF HF	#1 / #2	3' 4"	5' 10"	6' 0"	6' 11"	7' 1"	8' 3"	8' 6"	10' 10"	11' 2"	12' 11"	13' 3"
		#3	3' 3"	4' 11"	4' 11"	6' 6"	6' 6"	8' 3"	8' 3"	10' 1"	10' 1"	12' 11"	12' 11"
		STUD	3' 3"	4' 11"	4' 11"	6' 5"	6' 5"	8' 3"	8' 3"	10' 0"	10' 0"	12' 11"	12' 11"
		STANDARD	3' 3"	4' 2"	4' 2"	5' 6"	5' 6"	7' 5"	7' 5"	8' 8"	8' 8"	11' 8"	11' 8"
	SP DFL	#1	3' 8"	5' 10"	6' 3"	6' 11"	7' 5"	8' 3"	8' 11"	10' 10"	11' 8"	12' 11"	13' 11"
		#2	3' 7"	5' 10"	6' 3"	6' 11"	7' 5"	8' 3"	8' 11"	10' 10"	11' 8"	12' 11"	13' 11"
		#3	3' 6"	5' 0"	5' 0"	6' 8"	6' 8"	8' 3"	8' 8"	10' 4"	10' 4"	12' 11"	13' 7"
		STUD	3' 6"	5' 0"	5' 0"	6' 7"	6' 7"	8' 3"	8' 8"	10' 3"	10' 3"	12' 11"	13' 7"
		STANDARD	3' 4"	4' 3"	4' 3"	5' 8"	5' 8"	7' 8"	7' 8"	8' 10"	8' 10"	12' 0"	12' 0"
16" O.C.	SPF HF	#1 / #2	3' 10"	6' 8"	6' 10"	7' 11"	8' 1"	9' 6"	9' 8"	12' 6"	12' 9"	14' 0"	14' 0"
		#3	3' 9"	6' 0"	6' 0"	7' 11"	7' 11"	9' 5"	9' 5"	12' 4"	12' 4"	14' 0"	14' 0"
		STUD	3' 9"	6' 0"	6' 0"	7' 11"	7' 11"	9' 5"	9' 5"	12' 4"	12' 4"	14' 0"	14' 0"
		STANDARD	3' 9"	5' 2"	5' 2"	6' 10"	6' 10"	9' 2"	9' 2"	10' 7"	10' 7"	14' 0"	14' 0"
	SP DFL	#1	4' 3"	6' 8"	7' 2"	7' 11"	8' 6"	9' 5"	10' 2"	12' 5"	13' 5"	14' 0"	14' 0"
		#2	4' 2"	6' 8"	7' 2"	7' 11"	8' 6"	9' 5"	10' 2"	12' 5"	13' 5"	14' 0"	14' 0"
		#3	4' 0"	6' 2"	6' 2"	7' 11"	8' 2"	9' 5"	9' 11"	12' 5"	12' 8"	14' 0"	14' 0"
		STUD	4' 0"	6' 1"	6' 1"	7' 11"	8' 1"	9' 5"	9' 11"	12' 5"	12' 5"	14' 0"	14' 0"
		STANDARD	3' 10"	5' 3"	5' 3"	6' 11"	6' 11"	9' 4"	9' 4"	10' 10"	10' 10"	14' 0"	14' 0"
12" O.C.	SPF HF	#1 / #2	4' 3"	7' 4"	7' 7"	8' 9"	8' 11"	10' 5"	10' 8"	13' 8"	14' 0"	14' 0"	14' 0"
		#3	4' 2"	6' 11"	6' 11"	8' 9"	8' 9"	10' 5"	10' 5"	13' 8"	13' 8"	14' 0"	14' 0"
		STUD	4' 2"	6' 11"	6' 11"	8' 9"	8' 9"	10' 5"	10' 5"	13' 8"	13' 8"	14' 0"	14' 0"
		STANDARD	4' 2"	5' 11"	5' 11"	7' 10"	7' 10"	10' 5"	10' 5"	12' 3"	12' 3"	14' 0"	14' 0"
	SP DFL	#1	4' 8"	7' 4"	7' 11"	8' 9"	9' 5"	10' 5"	11' 2"	13' 8"	14' 0"	14' 0"	14' 0"
		#2	4' 7"	7' 4"	7' 11"	8' 9"	9' 5"	10' 5"	11' 2"	13' 8"	14' 0"	14' 0"	14' 0"
		#3	4' 4"	7' 2"	7' 2"	8' 9"	9' 2"	10' 5"	10' 11"	13' 5"	14' 0"	14' 0"	14' 0"
		STUD	4' 4"	7' 1"	7' 1"	8' 9"	9' 2"	10' 5"	10' 11"	13' 8"	14' 0"	14' 0"	14' 0"
		STANDARD	4' 3"	6' 1"	6' 1"	8' 0"	8' 0"	10' 5"	10' 8"	12' 6"	12' 6"	14' 0"	14' 0"

BRACING GROUP SPECIES AND GRADES:

GROUP A:

SPRUCE-PINE-FIR: #1 / #2 STANDARD; #3 STUD

HEM-FIR: #2 STUD; #3 STANDARD

DOUGLAS FIR-LARCH: #3; STUD; STANDARD

SOUTHERN PINE: #3; STUD; STANDARD

GROUP B:

HEM-FIR: #1 & BTR; #1

SOUTHERN PINE: #1; #2

DOUGLAS FIR-LARCH: #1; #2

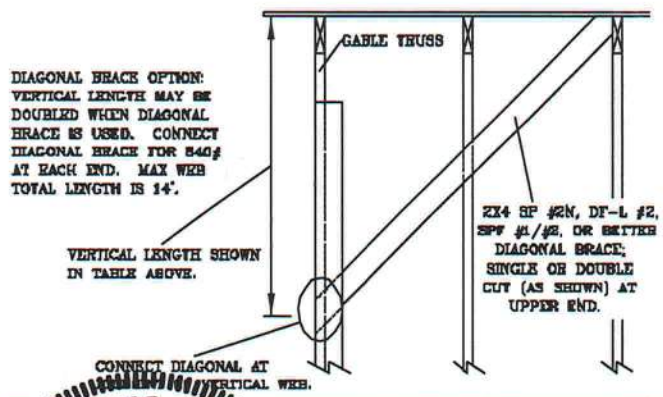

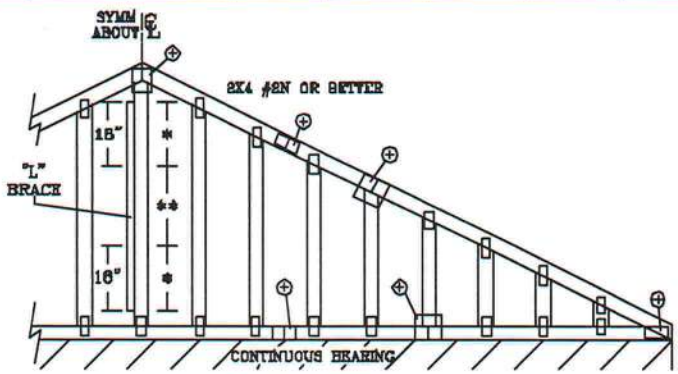

REFER TO CHART ABOVE FOR MAX GABLE VERTICAL LENGTH.

GABLE TRUSS DETAIL NOTES:

LIVE LOAD DEFLECTION CRITERIA IS L/240.

PROVIDE UPLIFT CONNECTIONS FOR 136 PLF OVER CONTINUOUS BEARING (5 PSF TC DEAD LOAD).

GABLE END SUPPORTS LOAD FROM 4' 0" OUTLOOKERS WITH 2' 0" OVERHANG, OR 12" PLYWOOD OVERHANG.

ATTACH EACH "L" BRACE WITH 10d NAILS.
* FOR (1) "L" BRACE: SPACE NAILS AT 2" O.C. IN 18" END ZONES AND 4" O.C. BETWEEN ZONES.
** FOR (2) "L" BRACES: SPACE NAILS AT 3" O.C. IN 18" END ZONES AND 6" O.C. BETWEEN ZONES.

"L" BRACING MUST BE A MINIMUM OF 80% OF WEB MEMBER LENGTH.

GABLE VERTICAL PLATE SIZES

VERTICAL LENGTH	NO SPLICE
LESS THAN 4' 0"	1X4 OR 2X3
GREATER THAN 4' 0", BUT LESS THAN 11' 8"	2X4
GREATER THAN 11' 8"	2.5X4

+ REFER TO COMMON TRUSS DESIGN FOR PEAK, SPLICE, AND HEEL PLATES.

JULIUS LEE LICENSE NO. 34869 STATE OF FLORIDA PROFESSIONAL ENGINEER

WARNING TRUSSES REQUIRE EXTREME CARE IN FABRICATING, HANDLING, SHIPPING, INSTALLING AND BRACING. REFER TO BCSI 1-03 (BUILDING COMPONENT SAFETY INFORMATION), PUBLISHED BY TPI (TRUSS PLATE INSTITUTE, 583 D'ONOFRIO DR, SUITE 200, MADISON, WI 53719) AND WTCA (WOOD TRUSS COUNCIL OF AMERICA, 6300 ENTERPRISE LN, MADISON, WI 53719) FOR SAFETY PRACTICES PRIOR TO PERFORMING THESE FUNCTIONS. UNLESS OTHERWISE INDICATED, TOP CHORD SHALL HAVE PROPERLY ATTACHED STRUCTURAL PANELS AND BOTTOM CHORD SHALL HAVE A PROPERLY ATTACHED RIGID CEILING.

REVIEWED
By julius lee at 12:00 pm, Jun 11, 2008

JULIUS LEE'S
CONS. ENGINEERS P.A.
1455 SW 4th AVENUE
DELRAY BEACH, FL 33444-2161

No: 34869
STATE OF FLORIDA

MAX. TOT. LD. 60 PSF

MAX. SPACING 24.0"

REF ASCE7-02-GAB13015
DATE 11/26/03
DRWG MITEK STD GABLE 15 E HT
-ENG

ASCE 7-02: 130 MPH WIND SPEED, 30' MEAN HEIGHT, ENCLOSED, I = 1.00, EXPOSURE C

MAX GABLE VERTICAL LENGTH

2X4 GABLE VERTICAL SPACING	SPECIES	BRACE GRADE	NO BRACES	(1) 1X4 "L" BRACE * GROUP A	(1) 1X4 "L" BRACE * GROUP B	(1) 2X4 "L" BRACE * GROUP A	(1) 2X4 "L" BRACE * GROUP B	(2) 2X4 "L" BRACE ** GROUP A	(2) 2X4 "L" BRACE ** GROUP B	(1) 2X6 "L" BRACE * GROUP A	(1) 2X6 "L" BRACE * GROUP B	(2) 2X6 "L" BRACE ** GROUP A	(2) 2X6 "L" BRACE ** GROUP B
24" O.C.	SPF HF	#1 / #2	3' 2"	5' 6"	6' 8"	6' 6"	6' 9"	7' 10"	8' 0"	10' 3"	10' 7"	12' 3"	12' 7"
		#3	3' 1"	4' 5"	4' 5"	6' 10"	5' 10"	7' 10"	7' 10"	9' 1"	9' 1"	12' 3"	12' 3"
		STUD	3' 1"	4' 5"	4' 5"	5' 10"	5' 10"	7' 10"	7' 10"	9' 1"	9' 1"	12' 3"	12' 3"
		STANDARD	2' 11"	3' 9"	3' 9"	5' 0"	5' 0"	6' 9"	6' 9"	7' 10"	7' 10"	10' 7"	10' 7"
	SP DFL	#1	3' 6"	5' 8"	5' 11"	6' 8"	7' 0"	7' 10"	8' 5"	10' 3"	11' 1"	12' 3"	13' 2"
		#2	3' 5"	5' 6"	5' 11"	6' 6"	7' 0"	7' 10"	8' 5"	10' 3"	11' 1"	12' 3"	13' 2"
		#3	3' 3"	4' 6"	4' 6"	6' 0"	6' 0"	7' 10"	8' 1"	9' 4"	9' 4"	12' 3"	12' 6"
		STUD	3' 3"	4' 6"	4' 6"	5' 11"	5' 11"	7' 10"	8' 0"	9' 3"	9' 3"	12' 3"	12' 6"
		STANDARD	3' 0"	3' 10"	3' 10"	5' 1"	5' 1"	6' 11"	6' 11"	8' 0"	8' 0"	10' 10"	10' 10"
16" O.C.	SPF HF	#1 / #2	3' 8"	6' 4"	6' 6"	7' 6"	7' 8"	8' 11"	9' 2"	11' 9"	12' 1"	14' 0"	14' 0"
		#3	3' 7"	5' 5"	5' 5"	7' 2"	7' 2"	8' 11"	8' 11"	11' 2"	11' 2"	14' 0"	14' 0"
		STUD	3' 7"	5' 5"	5' 5"	7' 2"	7' 2"	8' 11"	8' 11"	11' 1"	11' 1"	14' 0"	14' 0"
		STANDARD	3' 7"	4' 6"	4' 6"	6' 2"	6' 2"	8' 3"	8' 3"	9' 7"	9' 7"	12' 11"	12' 11"
	SP DFL	#1	4' 0"	6' 4"	6' 10"	7' 6"	8' 1"	8' 11"	9' 7"	11' 9"	12' 8"	14' 0"	14' 0"
		#2	3' 11"	6' 4"	6' 10"	7' 6"	8' 1"	8' 11"	9' 7"	11' 9"	12' 8"	14' 0"	14' 0"
		#3	3' 9"	5' 7"	6' 7"	7' 4"	7' 4"	8' 11"	9' 5"	11' 5"	11' 6"	14' 0"	14' 0"
		STUD	3' 9"	5' 6"	5' 6"	7' 3"	7' 3"	8' 11"	9' 5"	11' 4"	11' 4"	14' 0"	14' 0"
		STANDARD	3' 8"	4' 9"	4' 9"	6' 3"	6' 3"	8' 5"	8' 5"	9' 9"	9' 9"	13' 3"	13' 3"
12" O.C.	SPF HF	#1 / #2	4' 0"	6' 11"	7' 2"	8' 3"	8' 6"	9' 10"	10' 1"	12' 11"	13' 4"	14' 0"	14' 0"
		#3	3' 11"	6' 3"	6' 3"	8' 3"	8' 3"	9' 10"	9' 10"	12' 11"	12' 11"	14' 0"	14' 0"
		STUD	3' 11"	6' 3"	6' 3"	8' 3"	8' 3"	9' 10"	9' 10"	12' 10"	12' 10"	14' 0"	14' 0"
		STANDARD	3' 11"	5' 4"	5' 4"	7' 1"	7' 1"	9' 6"	9' 6"	11' 1"	11' 1"	14' 0"	14' 0"
	SP DFL	#1	4' 5"	6' 11"	7' 6"	8' 3"	8' 11"	9' 10"	10' 7"	12' 11"	13' 11"	14' 0"	14' 0"
		#2	4' 4"	6' 11"	7' 6"	8' 3"	8' 11"	9' 10"	10' 7"	12' 11"	13' 11"	14' 0"	14' 0"
		#3	4' 2"	6' 5"	6' 5"	8' 3"	8' 6"	9' 10"	10' 4"	12' 11"	13' 3"	14' 0"	14' 0"
		STUD	4' 2"	6' 4"	6' 4"	8' 3"	8' 6"	9' 10"	10' 4"	12' 11"	13' 1"	14' 0"	14' 0"
		STANDARD	4' 0"	5' 6"	5' 6"	7' 3"	7' 3"	9' 9"	9' 9"	11' 4"	11' 4"	14' 0"	14' 0"

BRACING GROUP SPECIES AND GRADES:

GROUP A:

SPRUCE-PINE-FIR: #1 / #2 STANDARD; #3 STUD

HEM-FIR: #2 STUD; #3 STANDARD

DOUGLAS FIR-LARCH: #3, STUD, STANDARD

SOUTHERN PINE: #3, STUD, STANDARD

GROUP B:

HEM-FIR: #1 & BTR, #1

SOUTHERN PINE: #1, #2

DOUGLAS FIR-LARCH: #1, #2

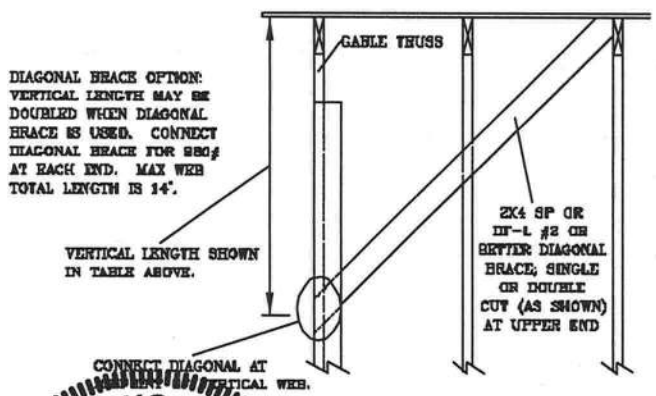

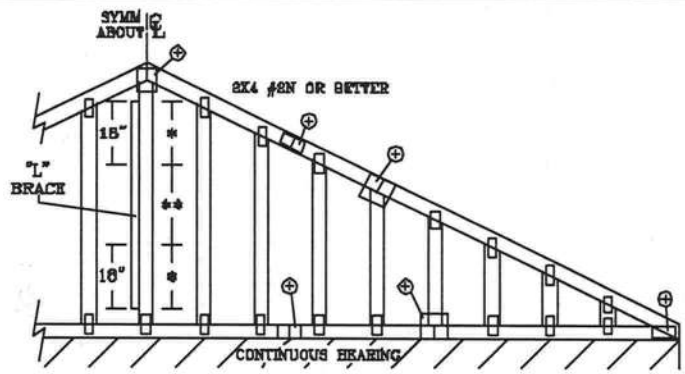

REFER TO CHART ABOVE FOR MAX GABLE VERTICAL LENGTH.

GABLE TRUSS DETAIL NOTES:

LIVE LOAD DEFLECTION CRITERIA IS L/240.

PROVIDE UPLIFT CONNECTIONS FOR 180 PLF OVER CONTINUOUS BEARING (5 PSF TC DEAD LOAD).

GABLE END SUPPORTS LOAD FROM 4' 0" OUTLOOKERS WITH 2' 0" OVERHANG, OR 12" PLYWOOD OVERHANG.

ATTACH EACH "L" BRACE WITH 10d NAILS.
* FOR (1) "L" BRACE: SPACE NAILS AT 2" O.C. IN 18" END ZONES AND 4" O.C. BETWEEN ZONES.
** FOR (2) "L" BRACES: SPACE NAILS AT 3" O.C. IN 18" END ZONES AND 6" O.C. BETWEEN ZONES.

"L" BRACING MUST BE A MINIMUM OF 80% OF WEB MEMBER LENGTH.

GABLE VERTICAL PLATE SIZES

VERTICAL LENGTH	NO SPLICE
LESS THAN 4' 0"	1X4 OR 2X3
GREATER THAN 4' 0", BUT LESS THAN 11' 6"	2X4
GREATER THAN 11' 6"	2.5X4

+ REFER TO COMMON TRUSS DESIGN FOR PEAK, SPLICE, AND HEEL PLATES.

JULIUS LEE LICENSE NO. 34869 STATE OF FLORIDA PROFESSIONAL ENGINEER

WARNING TRUSSES REQUIRE EXTREME CARE IN FABRICATING, HANDLING, SHIPPING, INSTALLING AND BRACING. REFER TO BCSI 1-03 (BUILDING COMPONENT SAFETY INFORMATION), PUBLISHED BY TPI (TRUSS PLATE INSTITUTE, 583 D'ONOFRIO DR., SUITE 200, MADISON, WI 53719) AND WTCA (WOOD TRUSS COUNCIL OF AMERICA, 6300 ENTERPRISE LN, MADISON, WI 53719) FOR SAFETY PRACTICES PRIOR TO PERFORMING THESE FUNCTIONS. UNLESS OTHERWISE INDICATED, TOP CHORD SHALL HAVE PROPERLY ATTACHED STRUCTURAL PANELS AND BOTTOM CHORD SHALL HAVE A PROPERLY ATTACHED RIGID CEILING.

REVIEWED
By julius lee at 12:00 pm, Jun 11, 2008

JULIUS LEE'S
CONS. ENGINEERS P.A.
1456 SW 4th AVENUE
DELRAY BEACH, FL. 33444-2161
No: 34869
STATE OF FLORIDA

MAX. TOT. LD. 60 PSF

MAX. SPACING 24.0"

REF	ASCE7-02-GAB13030
DATE	11/26/03
DWG	MITEK STD GABLE 30' E H7
	-ENG

TYPICAL ATTIC TRUSS BRACING

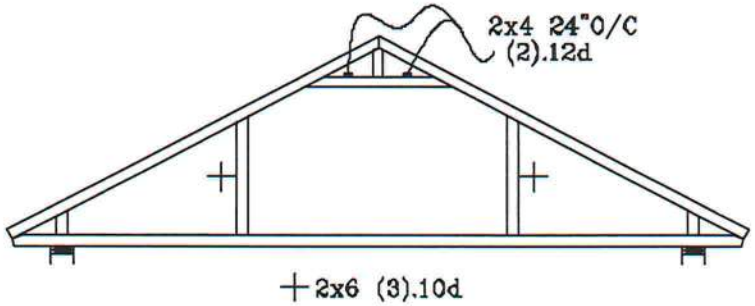

GABLE END TRUSS DETAIL

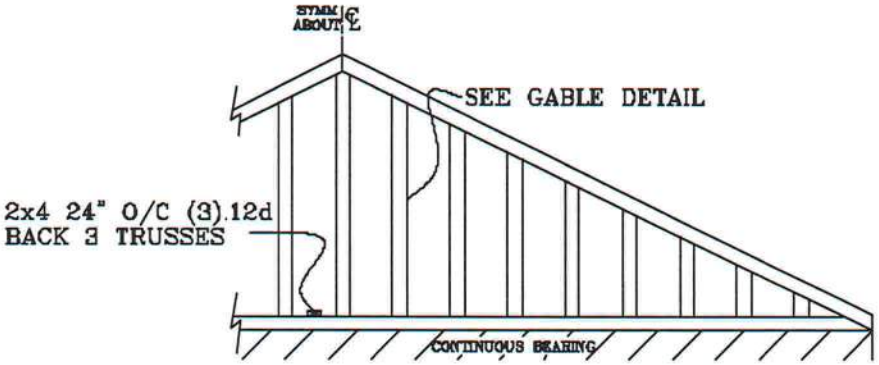

MINIMUM BC BRACING ON GABLE TRUSS. OTHER PERMANENT BRACING DESIGNS BY ARCHITECT OR EOR

TYPICAL ALTERNATE BRACING DETAIL FOR EXTERIOR FLAT GIRDER TRUSS

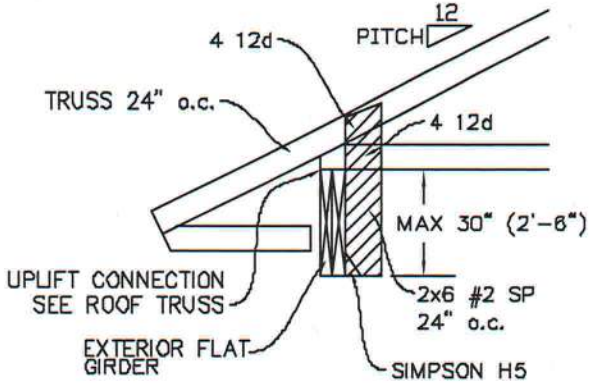

TYPICAL WALL GIRDER VERTICAL WEB BRACING DETAIL

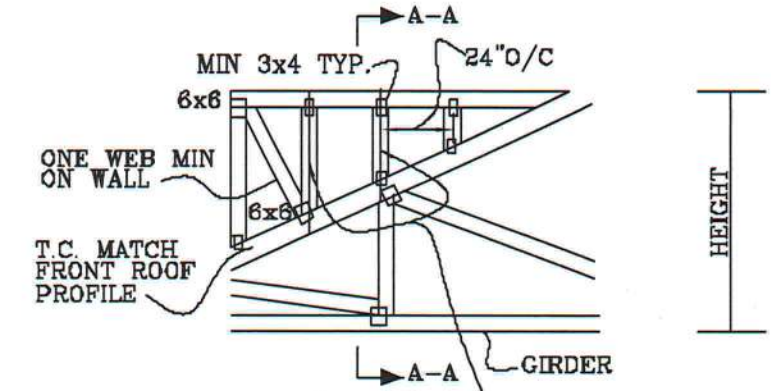

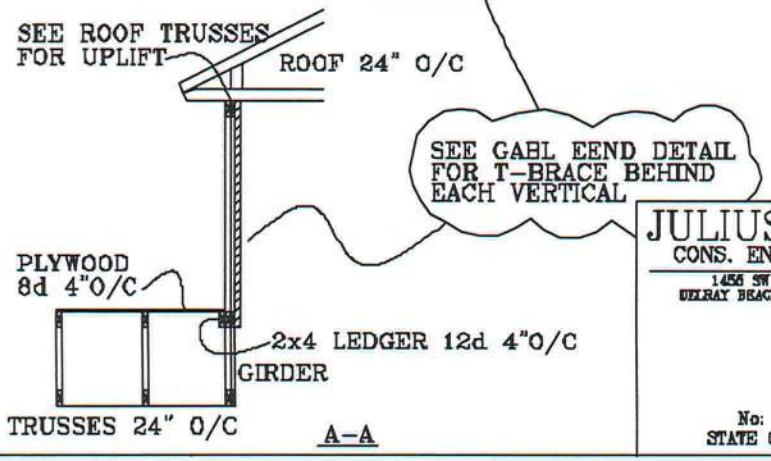

REVIEWED
By julius lee at 11:59 am, Jun 11, 2008

JULIUS LEE
LICENSE
NO. 34869
STATE OF
FLORIDA
PROFESSIONAL ENGINEER

JULIUS LEE'S
CONS. ENGINEERS P.A.
1456 SW 4th AVENUE
DELRAY BEACH, FL 33444-2161

No: 34869
STATE OF FLORIDA

PIGGYBACK DETAIL

TOP CHORD 2X4 #2 OR BETTER
BOT CHORD 2X4 #2 OR BETTER
WEBS 2X4 #3 OR BETTER

REFER TO SEALED DESIGN FOR DASHED PLATES.

SPACE PIGGYBACK VERTICALS AT 4' OC MAX.

TOP AND BOTTOM CHORD SPLICES MUST BE STAGGERED SO THAT ONE SPLICE IS NOT DIRECTLY OVER ANOTHER.

PIGGYBACK BOTTOM CHORD MAY BE OMITTED. ATTACH VERTICAL WEBS TO TRUSS TOP CHORD WITH 1.5X3 PLATE.

ATTACH PURLINS TO TOP OF FLAT TOP CHORD. IF PIGGYBACK IS SOLID LUMBER OR THE BOTTOM CHORD IS OMITTED, PURLINS MAY BE APPLIED BENEATH THE TOP CHORD OF SUPPORTING TRUSS.

REFER TO ENGINEER'S SEALED DESIGN FOR REQUIRED PURLIN SPACING.

THIS DETAIL IS APPLICABLE FOR THE FOLLOWING WIND CONDITIONS:

110 MPH WIND, 30' MEAN HGT, ASCE 7-02, CLOSED BLDG, LOCATED ANYWHERE IN ROOF, 1 MI FROM COAST CAT I, EXP C, WIND TC DL=5 PSF, WIND BC DL=5 PSF

110 MPH WIND, 30' MEAN HGT, FBC ENCLOSED BLDG, LOCATED ANYWHERE IN ROOF WIND TC DL=5 PSF, WIND BC DL=5 PSF

130 MPH WIND, 30' MEAN HGT, ASCE 7-02, CLOSED BLDG, LOCATED ANYWHERE IN ROOF, CAT II, EXP. C, WIND TC DL=5 PSF, WIND BC DL=5 PSF

FRONT FACE (E,*) PLATES MAY BE OFFSET FROM BACK FACE PLATES AS LONG AS BOTH FACES ARE SPACED 4' OC MAX.

JOINT TYPE	SPANS UP TO			
	30'	34'	38'	62'
A	2X4	2.5X4	2.5X4	3X5
B	4X6	5X6	5X6	5X6
C	1.5X3	1.5X4	1.5X4	1.5X4
D	5X4	6X5	6X5	5X6
E	4X8 OR 3X6 TRULOX AT 4' OC, ROTATED VERTICALLY			

ATTACH TRULOX PLATES WITH (6) 0.120" X 1.375" NAILS, OR EQUAL, PER FACE PER PLY. (4) NAILS IN EACH MEMBER TO BE CONNECTED. REFER TO DRAWING 160 TL FOR TRULOX INFORMATION.

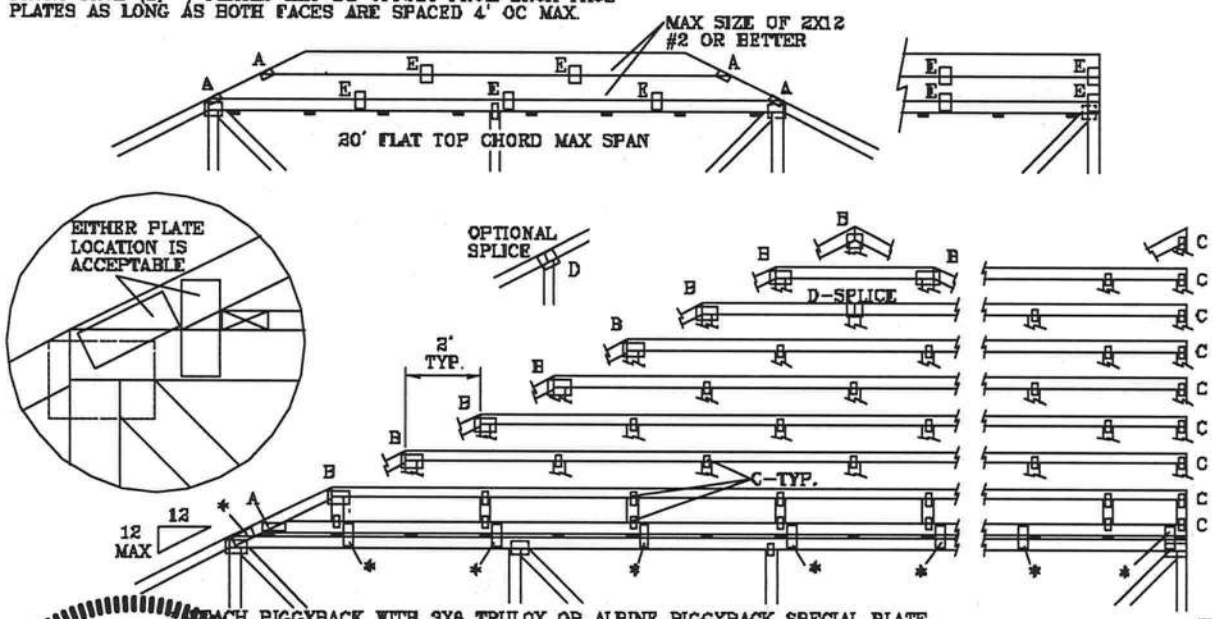

WEB BRACING CHART	
WEB LENGTH	REQUIRED BRACING
0' TO 7'9"	NO BRACING
7'9" TO 10'	1x4 "T" BRACE. SAME GRADE, SPECIES AS WEB MEMBER, OR BETTER, AND 80% LENGTH OF WEB MEMBER. ATTACH WITH 6d NAILS AT 4" OC.
10' TO 14'	2x4 "T" BRACE. SAME GRADE, SPECIES AS WEB MEMBER, OR BETTER, AND 80% LENGTH OF WEB MEMBER. ATTACH WITH 16d NAILS AT 4" OC.

* PIGGYBACK SPECIAL PLATE

ATTACH TEETH TO THE PIGGYBACK AT THE TIME OF FABRICATION. ATTACH TO SUPPORTING TRUSS WITH (4) 0.120" X 1.375" NAILS PER FACE PER PLY. APPLY PIGGYBACK SPECIAL PLATE TO EACH TRUSS FACE AND SPACE 4' OC OR LESS.

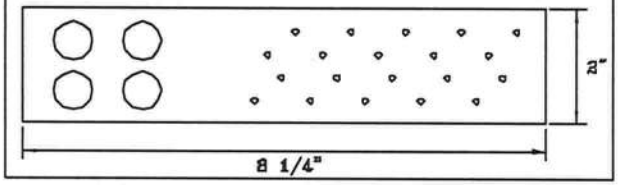

ATTACH PIGGYBACK WITH 3X8 TRULOX OR ALPINE PIGGYBACK SPECIAL PLATE.

THIS DRAWING REPLACES DRAWINGS 634,016 634,017 & 847,045

JULIUS LEE LICENSE NO. 34869 STATE OF FLORIDA PROFESSIONAL ENGINEER

WARNING: TRUSSES REQUIRE EXTREME CARE IN FABRICATING, HANDLING, SHIPPING, INSTALLING AND BRACING. REFER TO BCSI 1-03 (BUILDING COMPONENT SAFETY INFORMATION), PUBLISHED BY TPI (TRUSS PLATE INSTITUTE, 583 D'ONOFRIO DR., SUITE 200, MADISON, WI. 53719) AND WTCA (WOOD TRUSS COUNCIL AMERICA, 6300 ENTERPRISE LN, MADISON, WI 53719) FOR SAFETY PRACTICES PRIOR TO PERFORMING THESE FUNCTIONS. UNLESS OTHERWISE INDICATED, TOP CHORD SHALL HAVE PROPERLY ATTACHED STRUCTURAL PANELS AND BOTTOM CHORD SHALL HAVE A PROPERLY ATTACHED RIGID CEILING.

REVIEWED
By julius lee at 11:59 am, Jun 11, 2008

JULIUS LEE'S
CONS. ENGINEERS P.A.
1466 SW 4th AVENUE
DELRAY BEACH, FL. 33444-2161

No: 34869
STATE OF FLORIDA

MAX LOADING
55 PSF AT 1.33 DUR. FAC.
50 PSF AT 1.25 DUR. FAC.
47 PSF AT 1.15 DUR. FAC.
SPACING 24.0"

REF PIGGYBACK
DATE 09/12/07
DRWG MITEK STD PIGGY
-ENG JL

VALLEY TRUSS DETAIL

TOP CHORD 2X4 SP #2 OR SPF #1/#2 OR BETTER.
BOT CHORD 2X3(*) OR 2X4 SP #2N OR SPF #1/#2 OR BETTER.
WEBS 2X4 SP #3 OR BETTER.

* 2X3 MAY BE RIPPED FROM A 2X6 (PITCHED OR SQUARE).

** ATTACH EACH VALLEY TO EVERY SUPPORTING TRUSS WITH: (2) 16d BOX (0.135" X 3.5") NAILS TOE-NAILED FOR FBC 2004 110 MPH, ASCE 7-02 110 MPH WIND OR (3) 16d FOR ASCE 7-02 130 MPH WIND. 15' MEAN HEIGHT, ENCLOSED BUILDING, EXP. C, RESIDENTIAL, WIND TC DL=5 PSF.

UNLESS SPECIFIED ON ENGINEER'S SEALED DESIGN, APPLY 1X4 "T"-BRACE, 80% LENGTH OF WEB, VALLEY WEB, SAME SPECIES AND GRADE OR BETTER, ATTACHED WITH 8d BOX (0.113" X 2.5") NAILS AT 6" OC, OR CONTINUOUS LATERAL BRACING, EQUALLY SPACED, FOR VERTICAL VALLEY WEBS GREATER THAN 7'9".

MAXIMUM VALLEY VERTICAL HEIGHT MAY NOT EXCEED 12'0".

TOP CHORD OF TRUSS BENEATH VALLEY SET MUST BE BRACED WITH:
PROPERLY ATTACHED, RATED SHEATHING APPLIED PRIOR TO VALLEY TRUSS INSTALLATION
OR
PURLINS AT 24" OC OR AS OTHERWISE SPECIFIED ON ENGINEERS' SEALED DESIGN
OR
BY VALLEY TRUSSES USED IN LIEU OF PURLIN SPACING AS SPECIFIED ON ENGINEERS' SEALED DESIGN.

*** NOTE THAT THE PURLIN SPACING FOR BRACING THE TOP CHORD OF THE TRUSS BENEATH THE VALLEY IS MEASURED ALONG THE SLOPE OF THE TOP CHORD.

++ LARGER SPANS MAY BE BUILT AS LONG AS THE VERTICAL HEIGHT DOES NOT EXCEED 12'0".

BOTTOM CHORD MAY BE SQUARE OR PITCHED CUT AS SHOWN.

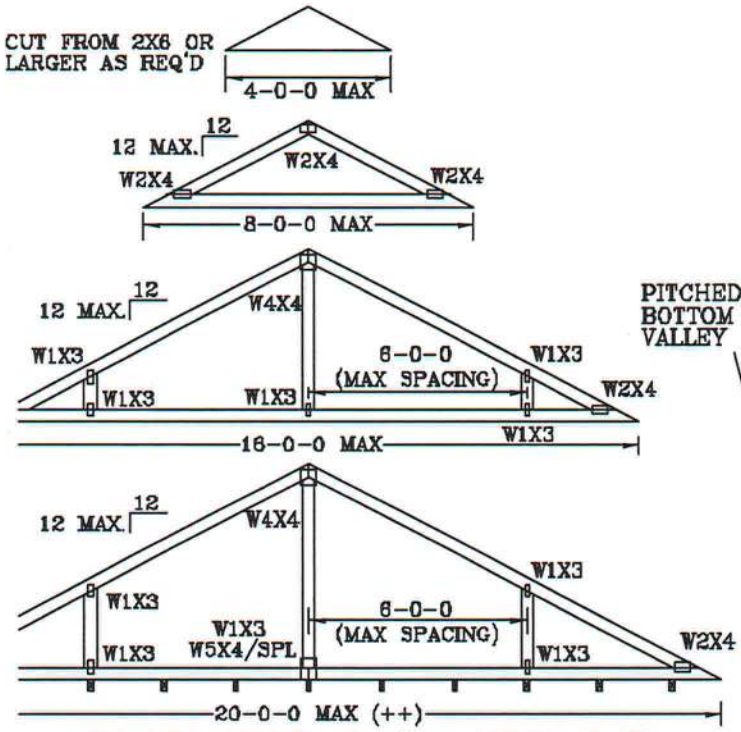

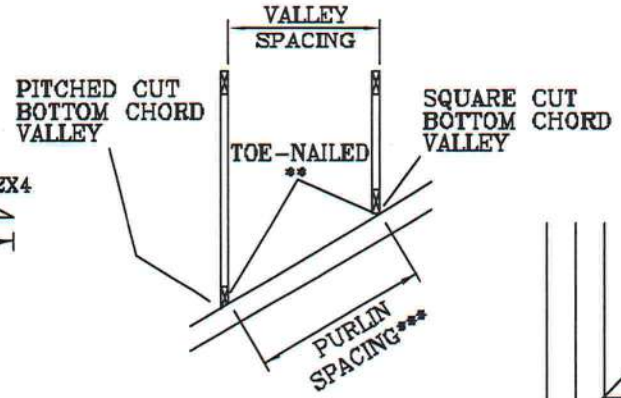

OPTIONAL STUB END DETAIL

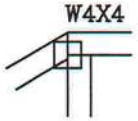

OPTIONAL HIP JOINT DETAIL

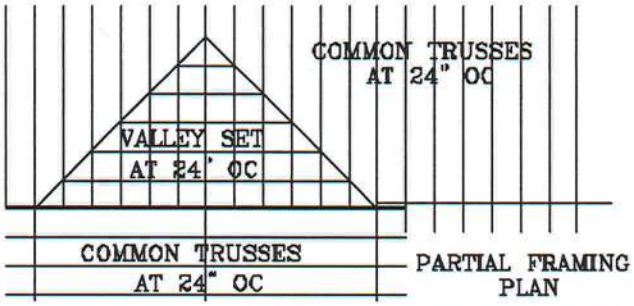

PARTIAL FRAMING PLAN

SUPPORTING TRUSSES AT 24" OC MAXIMUM SPACING.

THIS DRAWING REPLACES DRAWING A105

JULIUS LEE LICENSE NO. 34869 STATE OF FLORIDA PROFESSIONAL ENGINEER

WARNING: TRUSSES REQUIRE EXTREME CARE IN FABRICATING, HANDLING, SHIPPING, INSTALLING AND BRACING. REFER TO BCSI 1-03 (BUILDING COMPONENT SAFETY INFORMATION), PUBLISHED BY TPI (TRUSS PLATE INSTITUTE, 583 D'ONOFRIO DR., SUITE 200, MADISON, WI. 53719) AND WTCA (WOOD TRUSS COUNCIL OF AMERICA, 6300 ENTERPRISE LN, MADISON, WI 53719) FOR SAFETY PRACTICES PRIOR TO PERFORMING THESE FUNCTIONS. UNLESS OTHERWISE INDICATED, TOP CHORD SHALL HAVE PROPERLY ATTACHED STRUCTURAL PANELS AND BOTTOM CHORD SHALL HAVE A PROPERLY ATTACHED RIGID CEILING.

REVIEWED
By julius lee at 11:59 am, Jun 11, 2008

JULIUS LEE'S
CONS. ENGINEERS P.A.
1455 SW 4th AVENUE
DELRAY BEACH, FL 33444-2161
No. 34869
STATE OF FLORIDA

TC LL	20	20	PSF	
TC DL	7	15	PSF	
BC DL	5	5	PSF	
BC LL	0	0	PSF	
TOT. LD.	32	40	PSF	
DUR.FAC.	1.25	1.25		
SPACING		24"		

REF	VALLEY DETAIL
DATE	11/26/03
DRWG	VALTRUSS1103
-ENG	JL

TOE-NAIL DETAIL

TOE-NAILS TO BE DRIVEN AT AN ANGLE OF APPROXIMATELY THIRTY DEGREES WITH THE PIECE AND STARTED APPROXIMATELY ONE-THIRD THE LENGTH OF THE NAIL FROM THE END OF THE MEMBER.

PER ANSI/AF&PA NDS-2001 SECTION 12.4.1 – EDGE DISTANCE, END DISTANCE, SPACING: "EDGE DISTANCES, END DISTANCES AND SPACINGS FOR NAILS AND SPIKES SHALL BE SUFFICIENT TO PREVENT SPLITTING OF THE WOOD."

THE NUMBER OF TOE-NAILS TO BE USED IN A SPECIFIC APPLICATION IS DEPENDENT UPON PROPERTIES FOR THE CHORD SIZE, LUMBER SPECIES, AND NAIL TYPE. PROPER CONSTRUCTION PRACTICES AS WELL AS GOOD JUDGEMENT SHOULD DETERMINE THE NUMBER OF NAILS TO BE USED.

THIS DETAIL DISPLAYS A TOE-NAILED CONNECTION FOR JACK FRAMING INTO A SINGLE OR DOUBLE PLY SUPPORTING GIRDER.

MAXIMUM VERTICAL RESISTANCE OF 16d (0.162"X3.5") COMMON TOE-NAILS

NUMBER OF TOE-NAILS	SOUTHERN PINE		DOUGLAS FIR-LARCH		HEM-FIR		SPRUCE PINE FIR	
	1 PLY	2 PLIES	1 PLY	2 PLIES	1 PLY	2 PLIES	1 PLY	2 PLIES
2	197#	256#	181#	234#	156#	203#	154#	199#
3	296#	383#	271#	351#	234#	304#	230#	298#
4	394#	511#	361#	468#	312#	406#	307#	397#
5	493#	639#	452#	585#	390#	507#	384#	496#

ALL VALUES MAY BE MULTIPLIED BY APPROPRIATE DURATION OF LOAD FACTOR.

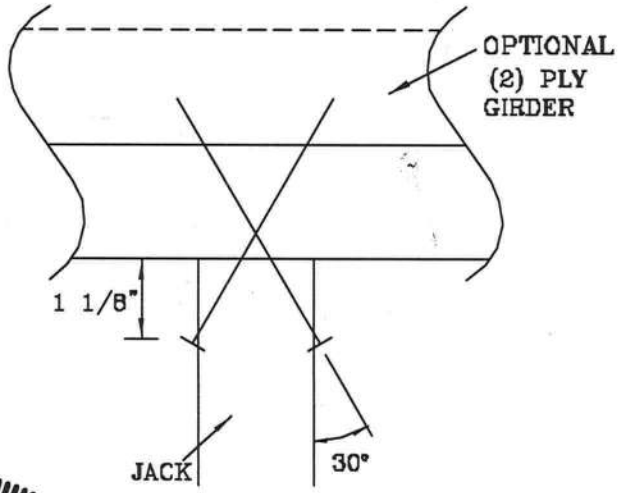

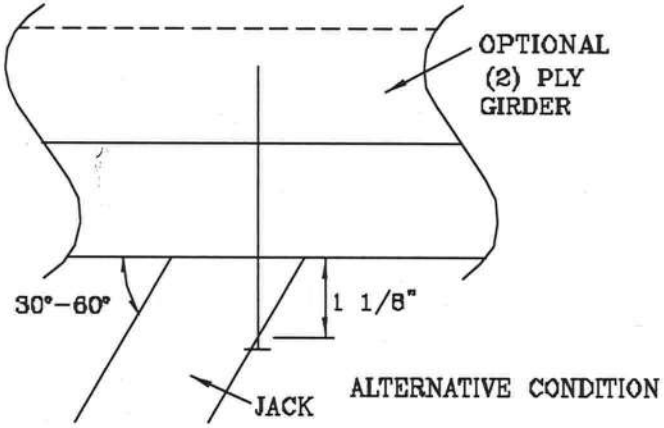

THIS DRAWING REPLACES DRAWING 784040

JULIUS LEE LICENSE NO. 34869 STATE OF FLORIDA PROFESSIONAL ENGINEER

WARNING: TRUSSES REQUIRE EXTREME CARE IN FABRICATING, HANDLING, SHIPPING, INSTALLING AND BRACING. REFER TO BCSI 1-03 BUILDING COMPONENT SAFETY INFORMATIONS, PUBLISHED BY TPI (TRUSS PLATE INSTITUTE, 583 D'ONOFRIO DR., SUITE 200, MADISON, WI 53719) AND WTCA (WOOD TRUSS COUNCIL OF AMERICA, 6300 ENTERPRISE LN, MADISON, WI 53719) FOR SAFETY PRACTICES PRIOR TO PERFORMING THESE FUNCTIONS. UNLESS OTHERWISE INDICATED, TOP CHORD SHALL HAVE PROPERLY ATTACHED STRUCTURAL PANELS AND BOTTOM CHORD SHALL HAVE A PROPERLY ATTACHED RIGID CEILING.

REVIEWED
By julius lee at 11:59 am, Jun 11, 2008

JULIUS LEE'S
CONS. ENGINEERS P.A.
1455 SW 4th AVENUE
DELRAY BEACH, FL 33444-2161

No: 34869
STATE OF FLORIDA

TC LL	PSF	REF TOE-NAIL
TC DL	PSF	DATE 09/12/07
BC DL	PSF	DRWG CNTONAIL1103
BC LL	PSF	-ENG JL
TOT. LD.	PSF	
DUR. FAC.	1.00	
SPACING		

1/2" DIAMETER BOLT SPACING FOR LOAD APPLIED PARALLEL TO GRAIN.

* GRADE AND SPECIES AS SPECIFIED ON THE ALPINE DESIGN.

BOLT HOLES SHALL BE A MINIMUM OF 1/32" TO A MAXIMUM OF 1/16" LARGER THAN BOLT DIAMETER.

TYPICAL LOCATION OF 1/2" DIAMETER THRU BOLTS. BOLT QUANTITIES AS NOTED ON SEALED DESIGN MUST BE APPLIED IN ONE OF THE PATTERNS SHOWN BELOW.

WASHERS REQUIRED UNDER BOLT HEAD AND NUT

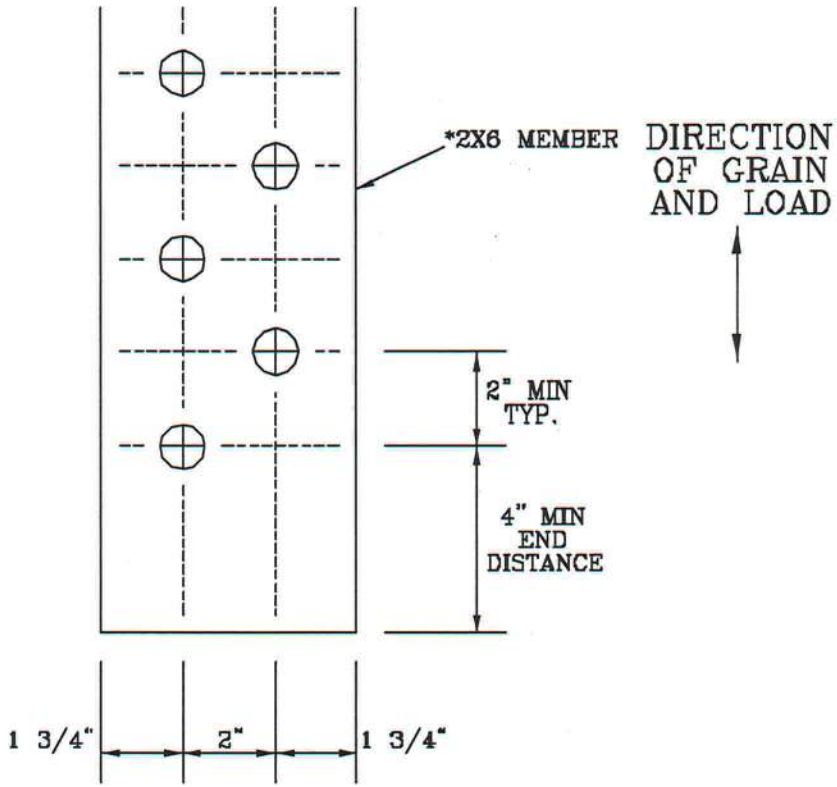

2X6 DETAIL

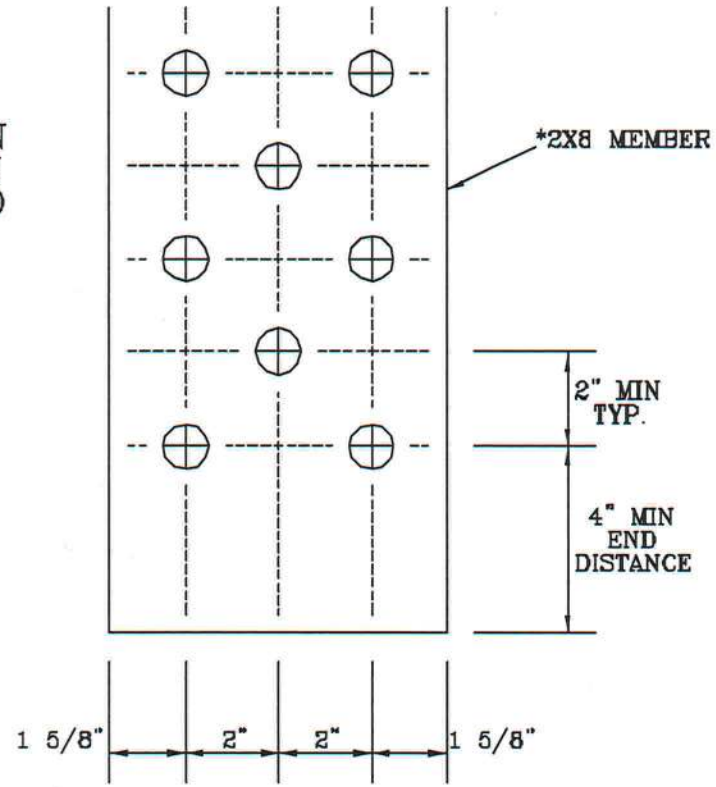

2X8 DETAIL

THIS DRAWING REPLACES DRAWING A628.016

JULIUS LEE LICENSE NO. 34869 STATE OF FLORIDA PROFESSIONAL ENGINEER

WARNING TRUSSES REQUIRE EXTREME CARE IN FABRICATING, HANDLING, SHIPPING, INSTALLING AND BRACING. REFER TO BCSI 1-03 (BUILDING COMPONENT SAFETY INFORMATION), PUBLISHED BY TPI (TRUSS PLATE INSTITUTE, 583 D'ONOFRIO DR., SUITE 200, MADISON, WI. 53719) AND WTCA (WOOD TRUSS COUNCIL OF AMERICA, 6300 ENTERPRISE LN, MADISON, WI 53719) FOR SAFETY PRACTICES PRIOR TO PERFORMING THESE FUNCTIONS. UNLESS OTHERWISE INDICATED, TOP CHORD SHALL HAVE PROPERLY ATTACHED STRUCTURAL PANELS AND BOTTOM CHORD SHALL HAVE A PROPERLY ATTACHED RIGID CEILING.

REVIEWED
By julius lee at 11:59 am, Jun 11, 2008

JULIUS LEE'S
CONS. ENGINEERS P.A.
1455 SW 4th AVENUE
DELRAY BEACH, FL 33444-2161

No: 34869
STATE OF FLORIDA

TC LL	PSF	
TC DL	PSF	
BC DL	PSF	
BC LL	PSF	
TOT. LD.	PSF	
DUR. FAC.		
SPACING		

REF	BOLT SPACING
DATE	11/26/03
DRWG	CNBOLTSP1103
-ENG	JL

TRULOX CONNECTION DETAIL

11 GAUGE (0.120" X 1.375") NAILS REQUIRED FOR TRULOX PLATE ATTACHMENT. FILL ROWS COMPLETELY WHERE SHOWN (⊕).

* NAILS MAY BE OMITTED FROM THESE ROWS.

THIS DETAIL MAY BE USED WITH SO. PINE, DOUGLAS-FIR OR HEM-FIR CHORDS WITH A MINIMUM 1.00 DURATION OF LOAD OR SPRUCE-PINE-FIR CHORDS WITH A MINIMUM 1.15 DURATION OF LOAD. CHORD SIZE OF BOTH TRUSSES MUST EXCEED THE TRULOX PLATE WIDTH.

TRULOX PLATE IS CENTERED ON THE CHORDS AND BENT BETWEEN NAIL ROWS.

REFER TO ENGINEER'S SEALED DESIGN REFERENCING THIS DETAIL FOR LUMBER, PLATES, AND OTHER INFORMATION NOT SHOWN.

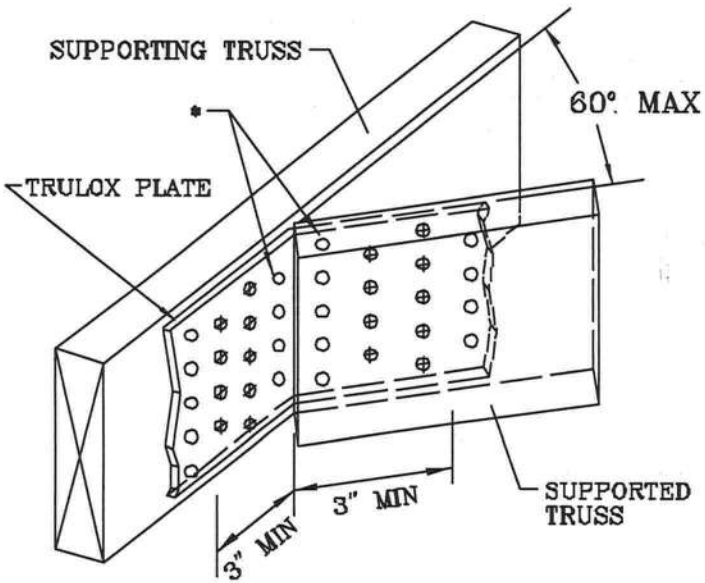

MINIMUM 3X6 TRULOX PLATE

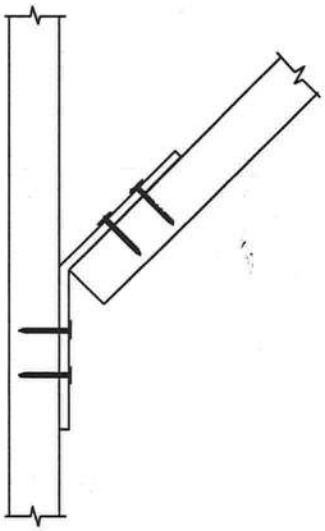

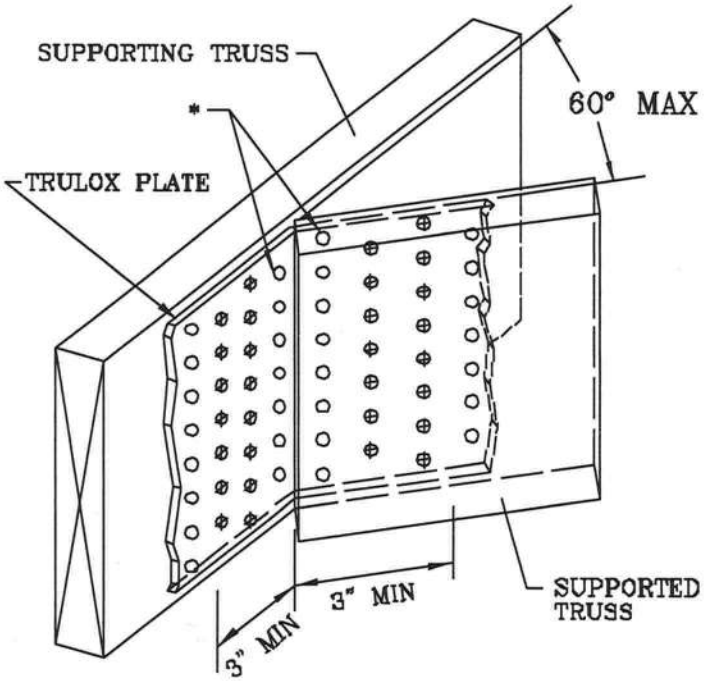

MINIMUM 5X6 TRULOX PLATE

TRULOX PLATE SIZE	REQUIRED NAILS PER TRUSS	MAXIMUM LOAD UP OR DOWN
3X6	9	350#
5X6	15	990#

REVIEWED
By julius lee at 11:58 am, Jun 11, 2008

JULIUS LEE LICENSE NO. 34869 STATE OF FLORIDA PROFESSIONAL ENGINEER

THIS DRAWING REPLACES DRAWINGS 1,158,989 1,158,989/R 1,154,944 1,152,217 1,152,017 1,159,154 & 1,151,524

WARNING TRUSSES REQUIRE EXTREME CARE IN FABRICATING, HANDLING, SHIPPING, INSTALLING AND BRACING. REFER TO BCSI 1-03 (BUILDING COMPONENT SAFETY INFORMATION), PUBLISHED BY TPI (TRUSS PLATE INSTITUTE, 583 D'ONOFRIO DR, SUITE 200, MADISON, WI 53719) AND WTCA (WOOD TRUSS COUNCIL OF AMERICA, 6300 ENTERPRISE LN, MADISON, WI 53719) FOR SAFETY PRACTICES PRIOR TO PERFORMING THESE FUNCTIONS. UNLESS OTHERWISE INDICATED, TOP CHORD SHALL HAVE PROPERLY ATTACHED STRUCTURAL PANELS AND BOTTOM CHORD SHALL HAVE A PROPERLY ATTACHED RIGID CEILING.

JULIUS LEE'S
CONS. ENGINEERS P.A.
1455 SW 4th AVENUE
DELRAY BEACH, FL 33444-2161

No: 34869
STATE OF FLORIDA

REF	TRULOX
DATE	11/26/03
DRWG	CNTRULOX1103
-ENG	JL

STRONG BACK DETAIL
SYSTEM-42 OR FLAT TRUSS

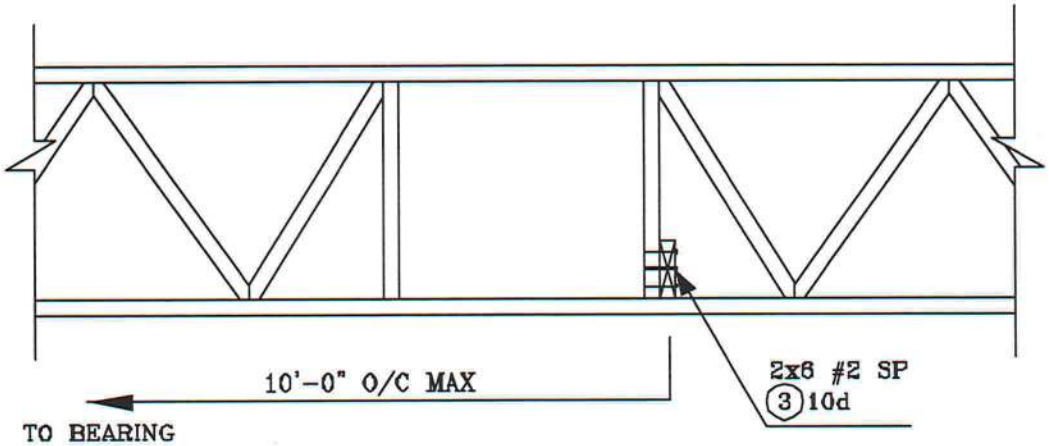

ALTERNATE DETAIL FOR STRONG BACK WITH VERTICAL NOT LINING UP

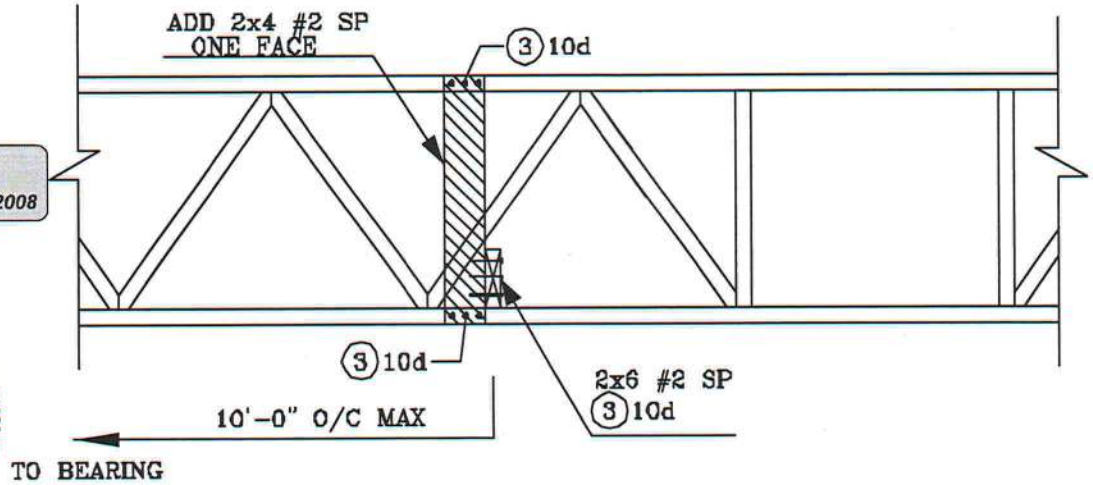

REVIEWED
By julius lee at 11:58 am, Jun 11, 2008

JULIUS LEE
LICENSE
NO. 34869
STATE OF
FLORIDA
PROFESSIONAL ENGINEER

JULIUS LEE'S
CONS. ENGINEERS P.A.
1456 SW 4th AVENUE
DELRAY BEACH, FL 33444-2161

No: 34869
STATE OF FLORIDA

MULTIPLE-MEMBER CONNECTIONS FOR SIDE-LOADED BEAMS

Maximum Uniform Load Applied to Either Outside Member (PLF)

Connector Type	Number of Rows	Connector On-Center Spacing	Connector Pattern					
			Assembly A	Assembly B	Assembly C	Assembly D	Assembly E	Assembly F
			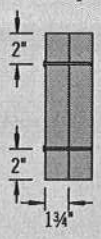	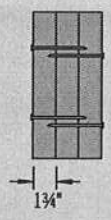	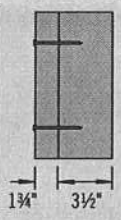	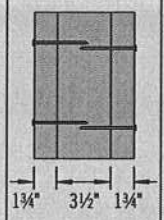	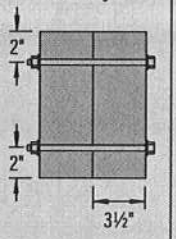	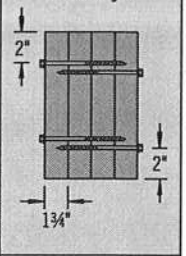
			3½" 2-ply	5¼" 3-ply	5¼" 2-ply	7" 3-ply	7" 2-ply	7" 4-ply
10d (0.128" x 3") Nail[1]	2	12"	370	***280***	280	***245***		
	3	12"	555	***415***	415	***370***		
½" A307 Through Bolts[2][4]	2	24"	505	380	520	465	860	340
		19.2"	635	475	655	580	1,075	425
		16"	760	570	785	695	1,290	505
SDS ¼" x 3½"[4]	2	24"	680	***510***	510	***455***		
		19.2"	850	***640***	640	***565***		
		16"	1,020	***765***	765	***680***		
SDS ¼" x 6"[3][4]	2	24"				***455***	***465***	***455***
		19.2"				***565***	***580***	***565***
		16"				***680***	***695***	***680***
USP WS35 [4]	2	24"	480	***360***	360	***320***		
		19.2"	600	***450***	450	***400***		
		16"	715	***540***	540	***480***		
USP WS6 [3][4]	2	24"				***350***	***525***	***350***
		19.2"				***440***	***660***	***440***
		16"				***525***	***790***	***525***
3⅜" TrussLok[4]	2	24"	635	***475***	475	***425***		
		19.2"	795	***595***	595	***530***		
		16"	955	***715***	715	***635***		
5" TrussLok[4]	2	24"		***500***	500	***445***	***480***	***445***
		19.2"		***625***	625	***555***	***600***	***555***
		16"		***750***	750	***665***	***725***	***665***
6¾" TrussLok[4]	2	24"				445	620	445
		19.2"				555	770	555
		16"				665	925	665

(1) Nailed connection values may be doubled for 6" on-center or tripled for 4" on-center nail spacing.

(2) Washers required. Bolt holes to be 9/16" maximum.

(3) 6" SDS or WS screws can be used with Parallam® PSL and Microllam® LVL, but are not recommended for TimberStrand® LSL.

(4) 24" on-center bolted and screwed connection values may be doubled for 12" on-center spacing.

General Notes

- Connections are based on NDS® 2005 or manufacturer's code report.
- Use specific gravity of 0.5 when designing lateral connections.
- Values listed are for 100% stress level. Increase 15% for snow-loaded roof conditions or 25% for non-snow roof conditions, where code allows.
- ***Bold Italic*** cells indicate **Connector Pattern** must be installed on both sides. Stagger fasteners on opposite side of beam by ½ the required **Connector Spacing**.
- Verify adequacy of beam in allowable load tables on pages 16–33.
- 7" wide beams should be side-loaded only when loads are applied to both sides of the members (to minimize rotation).
- Minimum end distance for bolts and screws is 6".
- Beams wider than 7" require special consideration by the design professional.

Uniform Load Design Example

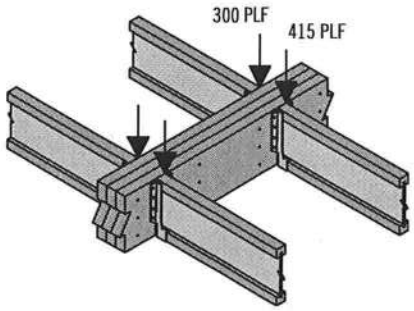

First, check the allowable load tables on pages 16–33 to verify that three pieces can carry the total load of 715 plf with proper live load deflection criteria. Maximum load applied to either outside member is 415 plf. For a 3-ply 1¾" assembly, two rows of 10d (0.128" x 3") nails at 12" on-center is good for only 280 plf. Therefore, use three rows of 10d (0.128" x 3") nails at 12" on-center (good for 415 plf).

Alternates:
Two rows of ½" bolts or SDS ¼" x 3½" screws at 19.2" on-center.

MULTIPLE-MEMBER CONNECTIONS FOR SIDE-LOADED BEAMS

Point Load—Maximum Point Load Applied to Either Outside Member (lbs)

Connector Type	Number of Connectors	Connector Pattern					
		Assembly A 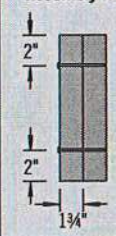	Assembly B 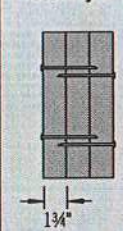	Assembly C 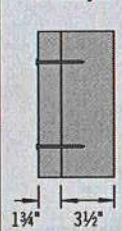	Assembly D 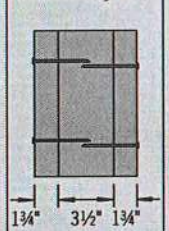	Assembly E 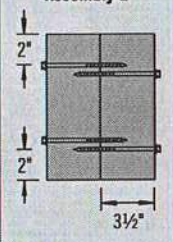	Assembly F 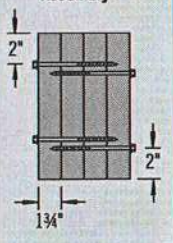
		3½" 2-ply	5¼" 3-ply	5¼" 2-ply	7" 3-ply	7" 2-ply	7" 4-ply
10d (0.128" x 3") Nail	6	1,110	***835***	835	***740***		
	12	2,225	***1,670***	1,670	***1,485***		
	18	3,335	***2,505***	2,505	***2,225***		
	24	4,450	***3,335***	3,335	***2,965***		
SDS Screws ¼" x 3½" or WS35 ¼" x 6" or WS6(1)	4	1,915	1,435(4)	1,435	***1,275***	***1,860(2)***	***1,405(2)***
	6	2,870	2,150 (4)	2,150	***1,915***	***2,785(2)***	***2,110(2)***
	8	3,825	2,870 (4)	2,870	***2,550***	***3,715(2)***	***2,810(2)***
3⅜" or 5" TrussLok™	4	2,545	1,910 (4)	1,910	***1,695***	***1,925(3)***	***1,775(3)***
	6	3,815	2,860 (4)	2,860	***2,545***	***2,890(3)***	***2,665(3)***
	8	5,090	3,815 (4)	3,815	***3,390***	***3,855(3)***	***3,550(3)***

(1) 6" SDS or WS screws can be used with Parallam® PSL and Microllam® LVL, but are not recommended for TimberStrand® LSL.

See General Notes on page 38

(2) 6" long screws required.

(3) 5" long screws required.

(4) 3½" and 3⅝" long screws must be installed on both sides.

Connections

4 or 6 or Screw Connection

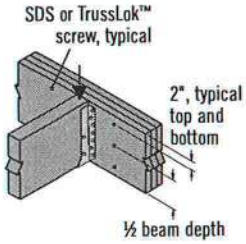

8 Screw Connection

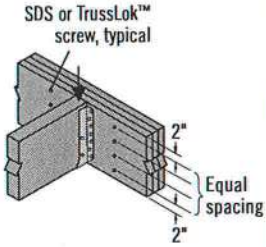

Nail Connection

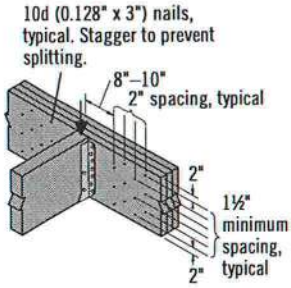

There must be an equal number of nails on each side of the connection

Point Load Design Example

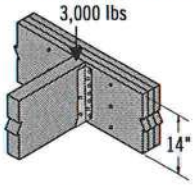

First, verify that a 3-ply 1¾" x 14" beam is capable of supporting the 3,000 lb point load as well as all other loads applied. The 3,000 lb point load is being transferred to the beam with a face mount hanger. For a 3-ply 1¾" assembly, eight 3⅜" TrussLok™ screws are good for 3,815 lbs with a face mount hanger.

MULTIPLE-MEMBER CONNECTIONS FOR TOP-LOADED BEAMS

1¾" Wide Pieces

- Minimum of three rows of 10d (0.128" x 3") nails at 12" on-center.
- Minimum of four rows of 10d (0.128" x 3") nails at 12" on-center for 14" or deeper.
- If using 12d–16d (0.148"–0.162" diameter) nails, the number of nailing rows may be reduced by one.
- Minimum of two rows of SDS, WS, or TrussLok™ screws at 16" on-center. Use 3⅜" minimum length with two or three plies; 5" minimum for 4-ply members. 6" SDS and WS screws are not recommended for use with TimberStrand® LSL. For 3- or 4-ply members, connectors must be installed on both sides. Stagger fasteners on opposite side of beam by ½ of the required connector spacing.
- Load must be applied evenly across entire beam width. Otherwise, use connections for side-loaded beams.

3½" Wide Pieces

- Minimum of two rows of SDS, WS, or TrussLok™ screws, 5" minimum length, at 16" on-center. 6" SDS and WS screws are not recommended for use with TimberStrand® LSL. Connectors must be installed on both sides. Stagger fasteners on opposite side of beam by ½ of the required connector spacing.
- Load must be applied evenly across entire beam width. Otherwise, use connections for side-loaded beams.
- Minimum of two rows of ½" bolts at 24" on-center staggered.

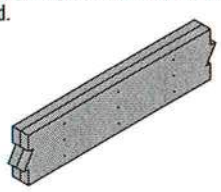

Multiple pieces can be nailed or bolted together to form a header or beam of the required size, up to a maximum width of 7"