DATE 10/07/2005

Columbia County Building Permit

This Permit Expires One Year From the Date of Issue

PERMIT
000023695

APPLICANT KIMMY EDGLEY PHONE 752-0580

ADDRESS 590 SW ARLINGTION BLVD LAKE CITY FL 32025

OWNER JAMES & DEBORAH STEPHENSON PHONE 752-0580

ADDRESS 231 SW BONANZA GLEN LAKE CITY FL 32025

CONTRACTOR DOUG EDGLEY PHONE 752-0580

LOCATION OF PROPERTY 90W, TL ON SISTERS WELCOME RD, TL ON BUSINESS POINT DR, 8TH LOT ON LEFT

TYPE DEVELOPMENT SFD, UTILITY ESTIMATED COST OF CONSTRUCTION 114100.00

HEATED FLOOR AREA 2282.00 TOTAL AREA 4361.00 HEIGHT .00 STORIES 1

FOUNDATION CONC WALLS FRAMED ROOF PITCH 6/12 FLOOR SLAB

LAND USE & ZONING RMF-1 MAX. HEIGHT 25

Minimum Set Back Requirments: STREET-FRONT 20.00 REAR 15.00 SIDE 10.00

NO. EX.D.U. 0 FLOOD ZONE X PP DEVELOPMENT PERMIT NO.

PARCEL ID 13-4S-16-02952-208 SUBDIVISION SOUTHERN APPROACHES

LOT 8 BLOCK PHASE UNIT TOTAL ACRES

000000838		RR28211326	Kimmy Edgley	
Culvert Permit No.	Culvert Waiver	Contractor's License Number	Applicant/Owner/Contractor	
CULVERT	05-0082	BK	JH	Y
Driveway Connection	Septic Tank Number	LU & Zoning checked by	Approved for Issuance	New Resident

COMMENTS: ONE FOOT ABOVE THE ROAD,

Check # or Cash 1304

FOR BUILDING & ZONING DEPARTMENT ONLY

(footer/Slab)

Temporary Power _____ date/app. by Foundation _____ date/app. by Monolithic _____ date/app. by

Under slab rough-in plumbing _____ date/app. by Slab _____ date/app. by Sheathing/Nailing _____ date/app. by

Framing _____ date/app. by Rough-in plumbing above slab and below wood floor _____ date/app. by

Electrical rough-in _____ date/app. by Heat & Air Duct _____ date/app. by Peri. beam (Lintel) _____ date/app. by

Permanent power _____ date/app. by C.O. Final _____ date/app. by Culvert _____ date/app. by

M/H tie downs, blocking, electricity and plumbing _____ date/app. by Pool _____ date/app. by

Reconnection _____ date/app. by Pump pole _____ date/app. by Utility Pole _____ date/app. by

M/H Pole _____ date/app. by Travel Trailer _____ date/app. by Re-roof _____ date/app. by

BUILDING PERMIT FEE $ 575.00 CERTIFICATION FEE $ 21.81 SURCHARGE FEE $ 21.81

MISC. FEES $ .00 ZONING CERT. FEE $ 50.00 FIRE FEE $ .00 WASTE FEE $

FLOOD DEVELOPMENT FEE $ FLOOD ZONE FEE $ 25.00 CULVERT FEE $ 25.00 **TOTAL FEE** 718.62

INSPECTORS OFFICE Hale Edelen CLERKS OFFICE CH

NOTICE: IN ADDITION TO THE REQUIREMENTS OF THIS PERMIT, THERE MAY BE ADDITIONAL RESTRICTIONS APPLICABLE TO THIS PROPERTY THAT MAY BE FOUND IN THE PUBLIC RECORDS OF THIS COUNTY. AND THERE MAY BE ADDITIONAL PERMITS REQUIRED FROM OTHER GOVERNMENTAL ENTITIES SUCH AS WATER MANAGEMENT DISTRICTS, STATE AGENCIES, OR FEDERAL AGENCIES.

"WARNING TO OWNER: YOUR FAILURE TO RECORD A NOTICE OF COMMENCEMENT MAY RESULT IN YOUR PAYING TWICE FOR IMPROVEMENTS TO YOUR PROPERTY. IF YOU INTEND TO OBTAIN FINANCING, CONSULT WITH YOUR LENDER OR AN ATTORNEY BEFORE RECORDING YOUR NOTICE OF COMMENCEMENT."

This Permit Must Be Prominently Posted on Premises During Construction

PLEASE NOTIFY THE COLUMBIA COUNTY BUILDING DEPARTMENT AT LEAST 24 HOURS IN ADVANCE OF EACH INSPECTION, IN ORDER THAT IT MAY BE MADE WITHOUT DELAY OR INCONVIENCE, PHONE 758-1008. THIS PERMIT IS NOT VALID UNLESS THE WORK AUTHORIZED BY IT IS COMMENCED WITHIN 6 MONTHS AFTER ISSUANCE.

The Issuance of this Permit Does Not Waive Compliance by Permittee with Deed Restrictions.

...on for Onsite Sewage Disposal System
...tion Permit. Part II Site Plan
...pplication Number: 05-0082

...ES MUST BE APPROVED BY THE COUNTY HEALTH UNIT

STEPHENSON, ... 04-2540

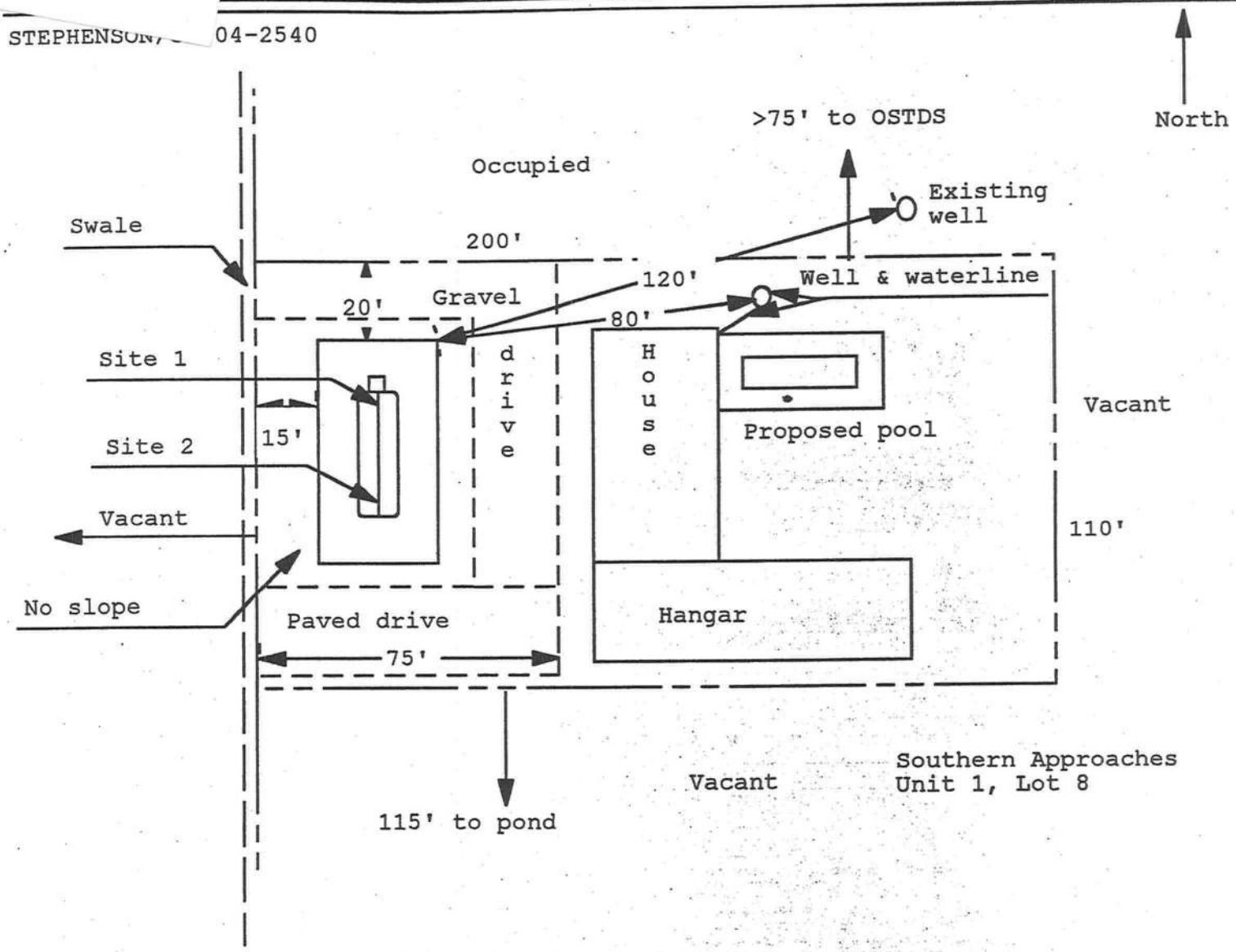

1 inch = 40 feet

Site Plan Submitted By [signature] Date 1/17/05

Plan Approved ✓ Not Approved ____ Date ____

By [signature] Columbia CPHU

Notes: ____

CERTIFICATE OF

OCCUPANCY

COLUMBIA COUNTY, FLORIDA

Department of Building and Zoning Inspection

This Certificate of Occupancy is issued to the below named permit holder for the building and premises at the below named location, and certifies that the work has been completed in accordance with the Columbia County Building Code.

Parcel Number 13-4S-16-02952-208 **Building permit No.** 000023695

Use Classification SFD, UTILITY **Fire:** 11.84

Permit Holder DOUG EDGLEY **Waste:** 24.50

Owner of Building JAMES & DEBORAH STEPHENSON **Total:** 36.34

Location: 231 SW BONANZA GLEN(SOUTHERN APPROACHES, LOT 8)

Date: 08/10/2006

Building Inspector

POST IN A CONSPICUOUS PLACE
(Business Places Only)

Columbia County Building Department
Culvert Permit

Culvert Permit No.
000000838

DATE 10/07/2005 PARCEL ID # 13-4S-16-02952-208

APPLICANT KIMMY EDGLEY PHONE 752-0580

ADDRESS 590 SW ARLINGTON BLVD LAKE CITY FL 32025

OWNER JAMES & DEBORAH STEPHENSON PHONE 752-0580

ADDRESS 231 SW BONANZA GLEN LAKE CITY FL 32025

CONTRACTOR EDGLEY CONSTRUCTION PHONE 752-0580

LOCATION OF PROPERTY 90W, TL ON SISTERS WELCOME RD, TL ON BUSNESS POINT DR, TL ON BONANZA GLEN,8TH LOT ON LEFT

SUBDIVISION/LOT/BLOCK/PHASE/UNIT SOUTHERN APPROACHES 8

SIGNATURE Kimmy Edgley

INSTALLATION REQUIREMENTS

[X] Culvert size will be 18 inches in diameter with a total lenght of 32 feet, leaving 24 feet of driving surface. Both ends will be mitered 4 foot with a 4 : 1 slope and poured with a 4 inch thick reinforced concrete slab.

INSTALLATION NOTE: Turnouts will be required as follows:
a) a majority of the current and existing driveway turnouts are paved, or;
b) the driveway to be served will be paved or formed with concrete.
Turnouts shall be concrete or paved a minimum of 12 feet wide or the width of the concrete or paved driveway, whichever is greater. The width shall conform to the current and existing paved or concreted turnouts.

[ ] Culvert installation shall conform to the approved site plan standards.

[ ] Department of Transportation Permit installation approved standards.

[ ] Other

ALL PROPER SAFETY REQUIREMENTS SHOULD BE FOLLOWED DURING THE INSTALATION OF THE CULVERT.

135 NE Hernando Ave., Suite B-21
Lake City, FL 32055
Phone: 386-758-1008 Fax: 386-758-2160

Amount Paid 25.00

COLUMBIA COUNTY · GATEWAY TO FLORIDA

James + Deborah Stephenson
Building Permit # 23695

THIS INSTRUMENT WAS PREPARED BY:
FIRST FEDERAL SAVINGS BANK OF FLORIDA
4705 WEST U.S. HIGHWAY 90
P.O. BOX 2029
LAKE CITY, FLORIDA 32056

PERMIT NO._____ TAX FOLIO NO._____

NOTICE OF COMMENCEMENT

STATE OF ~~FLORIDA~~ Michigan
COUNTY OF Calhoun

The undersigned hereby gives notice that improvement will be made to certain real property, and in accordance with Chapter 713, Florida Statutes, the following information is provided in this Notice of Commencement.

1. Description of property: Lot 8, SOUTHERN APPROACHES, UNIT 1, a subdivision according to the plat thereof as recorded in Plat Book 6, Page 88 of the public records of Columbia County, Florida.
2. General description of improvement: Construction of Dwelling
3. Owner information:
   a. Name and address: James G. Stephenson and Deborah G. Stephenson 18130 Homer Road, Marshall MI, 49068
   b. Interest in property: Fee Simple
   c. Name and address of fee simple title holder (if other than Owner): NONE
4. Contractor (name and address): Edgley Construction
5. Surety:
   a. Name and address: _____
   b. Amount of bond: _____
6. Lender: FIRST FEDERAL SAVINGS BANK OF FLORIDA
   4705 WEST U.S. HIGHWAY 90
   P. O. BOX 2029
   LAKE CITY, FLORIDA 32056
7. Persons within the State of Florida designated by Owner upon whom notices or other document may be served as provided by Section 713.13 (1) (a) 7., Florida Statutes: NONE
8. In addition to himself, Owner designates PAULA HACKER of FIRST FEDERAL SAVINGS BANK OF FLORIDA, 4705 West U.S. Highway 90 / P. O. Box 2029, Lake City, Florida 32056 to receive a copy of the Lienor's Notice as provided in Section 713.13 (1) (b), Florida Statutes.
9. Expiration date of notice of commencement (the expiration date is 1 year from the date of recording unless a different date is specified).

Borrower Name

Co-Borrower Name

The foregoing instrument was acknowledged before me this 24th day of May, 2005, by James G. Stephenson & Deborah G. Stephenson, who is personally known to me or who has produced driver's license for identification.

Susan J. Rhoades
Notary Public Susan J. Rhoades, Calhoun County, Michigan
My Commission Expires: Sept 26, 2006

SUSAN J. RHOADES
NOTARY PUBLIC, CALHOUN COUNTY, MI
MY COMMISSION EXPIRES SEPT. 26, 2006

Inst:2005013822 Date:06/13/2005 Time:14:18
DC,P.DeWitt Cason,Columbia County B:1048 P:2184

FORM 600A-2001 EnergyGauge® 3.4

FLORIDA ENERGY EFFICIENCY CODE FOR BUILDING CONSTRUCTION

Florida Department of Community Affairs

Residential Whole Building Performance Method A

Project Name:	**502044StephensonRes**	Builder:	**Edgley Const.**
Address:	**231 SW Bonanza Glen**	Permitting Office:	Columbia
City, State:	**Lake City, FL**	Permit Number:	23695
Owner:	**Stephenson**	Jurisdiction Number:	221000
Climate Zone:	**North**		

1. New construction or existing		New	
2. Single family or multi-family		Single family	
3. Number of units, if multi-family		1	
4. Number of Bedrooms		3	
5. Is this a worst case?		Yes	
6. Conditioned floor area (ft²)		2282 ft²	
7. Glass area & type	Single Pane	Double Pane	
a. Clear glass, default U-factor	0.0 ft²	205.5 ft²	
b. Default tint, default U-factor	0.0 ft²	0.0 ft²	
c. Labeled U-factor or SHGC	0.0 ft²	0.0 ft²	
8. Floor types			
a. Slab-On-Grade Edge Insulation		R=0.0, 250.0(p) ft	
b. N/A			
c. N/A			
9. Wall types			
a. Face Brick, Wood, Exterior		R=13.0, 1451.0 ft²	
b. Frame, Wood, Exterior		R=13.0, 60.0 ft²	
c. Frame, Wood, Adjacent		R=13.0, 356.0 ft²	
d. N/A			
e. N/A			
10. Ceiling types			
a. Under Attic		R=30.0, 2367.0 ft²	
b. N/A			
c. N/A			
11. Ducts			
a. Sup: Unc. Ret: Unc. AH: Interior		Sup. R=6.0, 200.0 ft	
b. Sup: Unc. Ret: Unc. AH: Interior		Sup. R=6.0, 40.0 ft	

12. Cooling systems		
a. Central Unit	Cap: 35.0 kBtu/hr	
	SEER: 10.00	
b. Central Unit	Cap: 10.0 kBtu/hr	
	SEER: 10.00	
c. N/A		
13. Heating systems		
a. Electric Heat Pump	Cap: 35.0 kBtu/hr	
	HSPF: 7.00	
b. Electric Heat Pump	Cap: 10.0 kBtu/hr	
	HSPF: 7.00	
c. N/A		
14. Hot water systems		
a. Electric Resistance	Cap: 40.0 gallons	
	EF: 0.89	
b. N/A		
c. Conservation credits (HR-Heat recovery, Solar DHP-Dedicated heat pump)		
15. HVAC credits (CF-Ceiling fan, CV-Cross ventilation, HF-Whole house fan, PT-Programmable Thermostat, MZ-C-Multizone cooling, MZ-H-Multizone heating)		

Glass/Floor Area: 0.09

Total as-built points: 29048
Total base points: 32907

PASS

I hereby certify that the plans and specifications covered by this calculation are in compliance with the Florida Energy Code.

PREPARED BY: Evan Beamsley

DATE: 3/2/05

I hereby certify that this building, as designed, is in compliance with the Florida Energy Code.

OWNER/AGENT: _____

DATE: _____

Review of the plans and specifications covered by this calculation indicates compliance with the Florida Energy Code. Before construction is completed this building will be inspected for compliance with Section 553.908 Florida Statutes.

GREAT SEAL OF THE STATE OF FLORIDA — IN GOD WE TRUST

BUILDING OFFICIAL: _____

DATE: _____

SUMMER CALCULATIONS

Residential Whole Building Performance Method A - Details

ADDRESS: **231 SW Bonanza Glen, Lake City, FL,** PERMIT #:

BASE

GLASS TYPES

.18 X	Conditioned Floor Area	X BSPM	= Points
.18	2282.0	20.04	8231.6

WALL TYPES	Area	X BSPM	= Points
Adjacent	356.0	0.70	249.2
Exterior	1511.0	1.70	2568.7
Base Total:	**1867.0**		**2817.9**

DOOR TYPES	Area	X BSPM	= Points
Adjacent	20.0	2.40	48.0
Exterior	100.0	6.10	610.0
Base Total:	**120.0**		**658.0**

CEILING TYPES	Area	X BSPM	= Points
Under Attic	2282.0	1.73	3947.9
Base Total:	**2282.0**		**3947.9**

FLOOR TYPES	Area	X BSPM	= Points
Slab	250.0(p)	-37.0	-9250.0
Raised	0.0	0.00	0.0
Base Total:			**-9250.0**

INFILTRATION	Area	X BSPM	= Points
	2282.0	10.21	23299.2

AS-BUILT

Type/SC	Overhang Ornt	Len	Hgt	Area	X SPM	X SOF	= Points
Double, Clear	N	0.0	0.0	20.0	19.20	1.00	384.0
Double, Clear	N	6.5	8.5	20.0	19.20	0.75	289.3
Double, Clear	N	6.5	5.5	12.0	19.20	0.68	157.2
Double, Clear	E	1.5	5.5	10.0	42.06	0.90	377.0
Double, Clear	E	1.5	6.5	15.0	42.06	0.93	584.6
Double, Clear	S	0.0	0.0	30.0	35.87	1.00	1076.0
Double, Clear	S	1.5	6.5	15.0	35.87	0.88	471.7
Double, Clear	S	9.5	6.5	60.0	35.87	0.48	1023.7
Double, Clear	S	9.5	8.5	20.0	35.87	0.50	361.4
Double, Clear	W	1.5	2.5	3.5	38.52	0.67	90.5
As-Built Total:				**205.5**			**4815.3**

Type	R-Value	Area	X SPM	= Points
Face Brick, Wood, Exterior	13.0	1451.0	0.35	507.9
Frame, Wood, Exterior	13.0	60.0	1.50	90.0
Frame, Wood, Adjacent	13.0	356.0	0.60	213.6
As-Built Total:		**1867.0**		**811.4**

Type	Area	X SPM	= Points
Exterior Insulated	60.0	4.10	246.0
Exterior Insulated	40.0	4.10	164.0
Adjacent Insulated	20.0	1.60	32.0
As-Built Total:	**120.0**		**442.0**

Type	R-Value	Area	X SPM X SCM	= Points
Under Attic	30.0	2367.0	1.73 X 1.00	4094.9
As-Built Total:		**2367.0**		**4094.9**

Type	R-Value	Area	X SPM	= Points
Slab-On-Grade Edge Insulation	0.0	250.0(p	-41.20	-10300.0
As-Built Total:		**250.0**		**-10300.0**

Area	X SPM	= Points
2282.0	10.21	23299.2

SUMMER CALCULATIONS

Residential Whole Building Performance Method A - Details

ADDRESS: **231 SW Bonanza Glen, Lake City, FL,** PERMIT #:

BASE				AS-BUILT						
Summer Base Points:			**29704.6**	**Summer As-Built Points:**						**23162.9**
Total Summer Points	X System Multiplier	=	Cooling Points	Total Component	X Cap Ratio	X Duct Multiplier (DM x DSM x AHU)	X System Multiplier	X Credit Multiplier	=	Cooling Points
				23162.9	0.778	(1.090 x 1.147 x 0.91)	0.341	1.000		6995.4
				23162.9	0.222	(1.090 x 1.147 x 0.91)	0.341	1.000		1998.7
29704.6	**0.4266**		**12672.0**	**23162.9**	**1.00**	**1.138**	**0.341**	**1.000**		**8994.1**

WINTER CALCULATIONS

Residential Whole Building Performance Method A - Details

ADDRESS: **231 SW Bonanza Glen, Lake City, FL,** PERMIT #:

BASE

GLASS TYPES

.18 X	Conditioned Floor Area	X BWPM	= Points
.18	2282.0	12.74	5233.1

WALL TYPES	Area	X BWPM	= Points
Adjacent	356.0	3.60	1281.6
Exterior	1511.0	3.70	5590.7
Base Total:	**1867.0**		**6872.3**

DOOR TYPES	Area	X BWPM	= Points
Adjacent	20.0	11.50	230.0
Exterior	100.0	12.30	1230.0
Base Total:	**120.0**		**1460.0**

CEILING TYPES	Area	X BWPM	= Points
Under Attic	2282.0	2.05	4678.1
Base Total:	**2282.0**		**4678.1**

FLOOR TYPES	Area	X BWPM	= Points
Slab	250.0(p)	8.9	2225.0
Raised	0.0	0.00	0.0
Base Total:			**2225.0**

INFILTRATION	Area	X BWPM	= Points
	2282.0	-0.59	-1346.4

AS-BUILT

Type/SC	Overhang Ornt	Len	Hgt	Area X	WPM X	WOF =	Points
Double, Clear	N	0.0	0.0	20.0	24.58	1.00	491.6
Double, Clear	N	6.5	8.5	20.0	24.58	1.02	498.9
Double, Clear	N	6.5	5.5	12.0	24.58	1.02	301.0
Double, Clear	E	1.5	5.5	10.0	18.79	1.04	195.7
Double, Clear	E	1.5	6.5	15.0	18.79	1.03	290.5
Double, Clear	S	0.0	0.0	30.0	13.30	1.00	398.9
Double, Clear	S	1.5	6.5	15.0	13.30	1.09	218.2
Double, Clear	S	9.5	6.5	60.0	13.30	3.25	2590.0
Double, Clear	S	9.5	8.5	20.0	13.30	2.92	777.4
Double, Clear	W	1.5	2.5	3.5	20.73	1.11	80.3
As-Built Total:				**205.5**			**5842.4**

Type	R-Value	Area X	WPM =	Points
Face Brick, Wood, Exterior	13.0	1451.0	3.17	4606.9
Frame, Wood, Exterior	13.0	60.0	3.40	204.0
Frame, Wood, Adjacent	13.0	356.0	3.30	1174.8
As-Built Total:		**1867.0**		**5985.7**

Type	Area X	WPM =	Points
Exterior Insulated	60.0	8.40	504.0
Exterior Insulated	40.0	8.40	336.0
Adjacent Insulated	20.0	8.00	160.0
As-Built Total:	**120.0**		**1000.0**

Type	R-Value	Area X	WPM X WCM =	Points
Under Attic	30.0	2367.0	2.05 X 1.00	4852.4
As-Built Total:		**2367.0**		**4852.4**

Type	R-Value	Area X	WPM =	Points
Slab-On-Grade Edge Insulation	0.0	250.0(p	18.80	4700.0
As-Built Total:		**250.0**		**4700.0**

Area X	WPM =	Points
2282.0	-0.59	-1346.4

WINTER CALCULATIONS

Residential Whole Building Performance Method A - Details

ADDRESS: **231 SW Bonanza Glen, Lake City, FL,** PERMIT #:

BASE				AS-BUILT						
Winter Base Points:			**19122.1**	**Winter As-Built Points:**						**21034.1**
Total Winter Points	X System Multiplier	=	Heating Points	Total Component	X Cap Ratio	X Duct Multiplier (DM x DSM x AHU)	X System Multiplier	X Credit Multiplier	=	Heating Points
				21034.1	0.778	(1.069 x 1.169 x 0.93)	0.487	1.000		9262.1
				21034.1	0.222	(1.069 x 1.169 x 0.93)	0.487	1.000		2646.3
19122.1	**0.6274**		**11997.2**	**21034.1**	**1.00**	**1.162**	**0.487**	**1.000**		**11908.5**

WATER HEATING & CODE COMPLIANCE STATUS

Residential Whole Building Performance Method A - Details

ADDRESS: **231 SW Bonanza Glen, Lake City, FL,** PERMIT #:

BASE				AS-BUILT							
WATER HEATING											
Number of Bedrooms	X	Multiplier	= Total	Tank Volume	EF	Number of Bedrooms	X	Tank Ratio	X Multiplier	X Credit Multiplier	= Total
3		2746.00	8238.0	40.0	0.89	3		1.00	2715.15	1.00	8145.4
				As-Built Total:							**8145.4**

CODE COMPLIANCE STATUS

BASE				AS-BUILT			
Cooling Points +	Heating Points +	Hot Water Points =	Total Points	Cooling Points +	Heating Points +	Hot Water Points =	Total Points
12672	**11997**	**8238**	**32907**	**8994**	**11908**	**8145**	**29048**

PASS

Code Compliance Checklist

Residential Whole Building Performance Method A - Details

ADDRESS: **231 SW Bonanza Glen, Lake City, FL,** PERMIT #:

6A-21 INFILTRATION REDUCTION COMPLIANCE CHECKLIST

COMPONENTS	SECTION	REQUIREMENTS FOR EACH PRACTICE	CHECK
Exterior Windows & Doors	606.1.ABC.1.1	Maximum:.3 cfm/sq.ft. window area; .5 cfm/sq.ft. door area.	
Exterior & Adjacent Walls	606.1.ABC.1.2.1	Caulk, gasket, weatherstrip or seal between: windows/doors & frames, surrounding wall; foundation & wall sole or sill plate; joints between exterior wall panels at corners; utility penetrations; between wall panels & top/bottom plates; between walls and floor. EXCEPTION: Frame walls where a continuous infiltration barrier is installed that extends from, and is sealed to, the foundation to the top plate.	
Floors	606.1.ABC.1.2.2	Penetrations/openings >1/8" sealed unless backed by truss or joint members. EXCEPTION: Frame floors where a continuous infiltration barrier is installed that is sealed to the perimeter, penetrations and seams.	
Ceilings	606.1.ABC.1.2.3	Between walls & ceilings; penetrations of ceiling plane of top floor; around shafts, chases, soffits, chimneys, cabinets sealed to continuous air barrier; gaps in gyp board & top plate; attic access. EXCEPTION: Frame ceilings where a continuous infiltration barrier is installed that is sealed at the perimeter, at penetrations and seams.	
Recessed Lighting Fixtures	606.1.ABC.1.2.4	Type IC rated with no penetrations, sealed; or Type IC or non-IC rated, installed inside a sealed box with 1/2" clearance & 3" from insulation; or Type IC rated with < 2.0 cfm from conditioned space, tested.	
Multi-story Houses	606.1.ABC.1.2.5	Air barrier on perimeter of floor cavity between floors.	
Additional Infiltration reqts	606.1.ABC.1.3	Exhaust fans vented to outdoors, dampers; combustion space heaters comply with NFPA, have combustion air.	

6A-22 OTHER PRESCRIPTIVE MEASURES (must be met or exceeded by all residences.)

COMPONENTS	SECTION	REQUIREMENTS	CHECK
Water Heaters	612.1	Comply with efficiency requirements in Table 6-12. Switch or clearly marked circuit breaker (electric) or cutoff (gas) must be provided. External or built-in heat trap required.	
Swimming Pools & Spas	612.1	Spas & heated pools must have covers (except solar heated). Non-commercial pools must have a pump timer. Gas spa & pool heaters must have a minimum thermal efficiency of 78%.	
Shower heads	612.1	Water flow must be restricted to no more than 2.5 gallons per minute at 80 PSIG.	
Air Distribution Systems	610.1	All ducts, fittings, mechanical equipment and plenum chambers shall be mechanically attached, sealed, insulated, and installed in accordance with the criteria of Section 610. Ducts in unconditioned attics: R-6 min. insulation.	
HVAC Controls	607.1	Separate readily accessible manual or automatic thermostat for each system.	
Insulation	604.1, 602.1	Ceilings-Min. R-19. Common walls-Frame R-11 or CBS R-3 both sides. Common ceiling & floors R-11.	

ENERGY PERFORMANCE LEVEL (EPL) DISPLAY CARD

ESTIMATED ENERGY PERFORMANCE SCORE* = 85.0

The higher the score, the more efficient the home.

Stephenson, 231 SW Bonanza Glen, Lake City, FL,

1. New construction or existing		New	
2. Single family or multi-family		Single family	
3. Number of units, if multi-family		1	
4. Number of Bedrooms		3	
5. Is this a worst case?		Yes	
6. Conditioned floor area (ft²)		2282 ft²	
7. Glass area & type	Single Pane	Double Pane	
a. Clear glass, default U-factor	0.0 ft²	205.5 ft²	
b. Default tint, default U-factor	0.0 ft²	0.0 ft²	
c. Labeled U-factor or SHGC	0.0 ft²	0.0 ft²	
8. Floor types			
a. Slab-On-Grade Edge Insulation		R=0.0, 250.0(p) ft	
b. N/A			
c. N/A			
9. Wall types			
a. Face Brick, Wood, Exterior		R=13.0, 1451.0 ft²	
b. Frame, Wood, Exterior		R=13.0, 60.0 ft²	
c. Frame, Wood, Adjacent		R=13.0, 356.0 ft²	
d. N/A			
e. N/A			
10. Ceiling types			
a. Under Attic		R=30.0, 2367.0 ft²	
b. N/A			
c. N/A			
11. Ducts			
a. Sup: Unc. Ret: Unc. AH: Interior		Sup. R=6.0, 200.0 ft	
b. Sup: Unc. Ret: Unc. AH: Interior		Sup. R=6.0, 40.0 ft	

12. Cooling systems		
a. Central Unit	Cap: 35.0 kBtu/hr	
	SEER: 10.00	
b. Central Unit	Cap: 10.0 kBtu/hr	
	SEER: 10.00	
c. N/A		
13. Heating systems		
a. Electric Heat Pump	Cap: 35.0 kBtu/hr	
	HSPF: 7.00	
b. Electric Heat Pump	Cap: 10.0 kBtu/hr	
	HSPF: 7.00	
c. N/A		
14. Hot water systems		
a. Electric Resistance	Cap: 40.0 gallons	
	EF: 0.89	
b. N/A		
c. Conservation credits (HR-Heat recovery, Solar DHP-Dedicated heat pump)		
15. HVAC credits (CF-Ceiling fan, CV-Cross ventilation, HF-Whole house fan, PT-Programmable Thermostat, MZ-C-Multizone cooling, MZ-H-Multizone heating)		

I certify that this home has complied with the Florida Energy Efficiency Code For Building Construction through the above energy saving features which will be installed (or exceeded) in this home before final inspection. Otherwise, a new EPL Display Card will be completed based on installed Code compliant features.

Builder Signature: _____ Date: _____

Address of New Home: _____ City/FL Zip: _____

**NOTE: The home's estimated energy performance score is only available through the FLA/RES computer program. This is not a Building Energy Rating. If your score is 80 or greater (or 86 for a US EPA/DOE EnergyStar™ designation), your home may qualify for energy efficiency mortgage (EEM) incentives if you obtain a Florida Energy Gauge Rating. Contact the Energy Gauge Hotline at 321/638-1492 or see the Energy Gauge web site at www.fsec.ucf.edu for information and a list of certified Raters. For information about Florida's Energy Efficiency Code For Building Construction, contact the Department of Community Affairs at 850/488-8124.*

EnergyGauge® (Version: FLR2PB v3.4)

FILED AND RECORDED IN PUBLIC RECORDS OF COLUMBIA COUNTY, FL

'01 JUN 27 AM 8:48

Documentary Stamps: + BK 0929 PG 2399 01-12022

Total: $

Prepared by and return to.

OFFICIAL RECORDS

TITLE OFFICES, LLC
2015 S. 1ST ST.,
LAKE CITY, FL. 32025
SE File #01Y-04090DH/

Documentary Stamp $ 192.50
Intangible Tax
P. DeWitt Cason
Clerk of Court
By D.C.

Property Appraisers Parcel I.D. Number(s):
02952-208

Grantee(s) S.S.#(s): 371-48-1123 + 377-58-0390

CLERK CIRCUIT COURT COLUMBIA COUNTY, FLORIDA

WARRANTY DEED

THIS WARRANTY DEED made and executed the 15th day of June, 2001, by **A & R OF LAKE CITY, INC.**, a corporation existing under the laws of Florida, and having its principal place of business at P. O. BOX 1733, LAKE CITY, FL 32056, hereinafter called the Grantor, to **JAMES G. STEPHENSON and DEBORAH G. STEPHENSON, HIS WIFE**, whose post office address is: 18130 HOMER RD, MARSHALL, MI 49068-9736, hereinafter called the Grantee:

(Wherever used herein the terms "first party" and "second party" shall include singular and plural, heirs, legal representatives, and assigns of individuals, and the successors and assigns of corporations, wherever the context so admits or requires.)

WITNESSETH: That the Grantor, for and in consideration of the sum of TEN DOLLARS ($10.00) and other valuable considerations, receipt whereof is hereby acknowledged, by these presents does grant, bargain, sell, alien, remise, release, convey and confirm unto the Grantee all that certain land situate, lying and being in COLUMBIA County, State of Florida, viz:

LOT 8, SOUTHERN APPROACHES, UNIT 1, A SUBDIVISION ACCORDING TO PLAT THEREOF RECORDED IN PLAT BOOK 6, PAGE 88, PUBLIC RECORDS OF COLUMBIA COUNTY, FLORIDA.

Subject to Restrictions, Reservations and Easements of Record.

TOGETHER with all the tenements, hereditaments and appurtenances thereto belonging or in anywise appertaining.

TO HAVE AND TO HOLD the same in fee simple forever.

AND the Grantor hereby covenants with said Grantee that the Grantor is lawfully seized of said land in fee simple; that the Grantor has good right and lawful authority to sell and convey said land, and hereby warrants the title to said land and will defend the same against the lawful claims of all persons whomsoever; and that said land is free of all encumbrances subsequent to December 31, 2000

IN WITNESS WHEREOF, the said Grantor has caused these presents to be executed in its name, and its corporate seal to be hereunto affixed, by its proper officers thereunto duly authorized, the day and year first above written.

Signed, sealed and delivered
in the presence of:

Dawna Wilson Herrington
Witness Signature
Printed Name: DAWNA HERRINGSHAW

Brenda Bonham Stymes
Witness Signature
Printed Name: Brenda Bonham Stymes

A & R OF LAKE CITY, INC.

BY: Audrey S. Bullard
AUDREY S. BULLARD, Vice President

Address: P. O. BOX 1733
LAKE CITY, FL 32056

ATTEST: _____
Secretary

(CORPORATE SEAL)

HALL'S PUMP & WELL SERVICE, INC.

SPECIALIZING IN 4"-6" WELLS

DONALD AND MARY HALL
OWNERS

PHONE (904) 752-1854
FAX (904) 755-7022
~~XXXXXXXXXXXXXXXXXX~~
LAKE CITY, FLORIDA 32055
904 NW Main Blvd.

June 12, 2002

NOTICE TO ALL CONTRACTORS

Please be advised that due to the new building codes we will use a large capacity diaphram tank on all new wells. This will insure a minimum of one (1) minute draw down or one (1) minute refill. If a smaller diaphram tank is used then we will install a cycle stop valve which will produce the same results.

If you have any questions please feel free to call our office anytime.

Thank you,

Donald D. Hall
DDH/jk

COLUMBIA COUNTY 9-1-1 ADDRESSING

263 NW Lake City Ave. * P. O. Box 2949 * Lake City, FL 32056-2949
PHONE: (386) 752-8787 * FAX: (386) 758-1365 * Email: ron_croft@columbiacountyfla.com

Sal – This is for Stephenson

Addressing Maintenance

To maintain the Countywide addressing Policy you must make application for a 9-1-1 Address at the time you apply for a building permit. The established standards for assigning and posting numbers to all principal buildings, dwellings, businesses and industries are contained in Columbia County Ordinance 2001-9. The addressing system is to enable Emergency Service Agencies to locate you in an emergency, and to assist the United States Postal Service and the public in the timely and efficient provision of services to residents and businesses of Columbia County.

DATE ISSUED: January 28, 2005

ENHANCED 9-1-1 ADDRESS:

231 SW BONANZA GLN (LAKE CITY, FL 32025)

Addressed Location 911 Phone Number: NOT AVAIL.

OCCUPANT NAME: NOT AVAIL.

OCCUPANT CURRENT MAILING ADDRESS:

PROPERTY APPRAISER MAP SHEET NUMBER: 71A

PROPERTY APPRAISER PARCEL NUMBER: 13-4S-16-02952-208

Other Contact Phone Number (If any):

Building Permit Number (If known):

Remarks: LOT 8, SOUTHERN APPROACHES, UNIT 1, S/D

Address Issued By: Ron M Croft
Columbia County 9-1-1 Addressing Department

COLUMBIA COUNTY
9-1-1 ADDRESSING

Residential System Sizing Calculation

Summary

Stephenson
231 SW Bonanza Glen
Lake City, FL

Project Title:
502044StephensonRes

Class 3 Rating
Registration No. 0
Climate: North

3/2/2005

Location for weather data: Gainesville - Defaults: Latitude(29) Temp Range(M)					
Humidity data: Interior RH (50%) Outdoor wet bulb (77F) Humidity difference(51gr.)					
Winter design temperature	31	F	Summer design temperature	93	F
Winter setpoint	70	F	Summer setpoint	75	F
Winter temperature difference	39	F	Summer temperature difference	18	F
Total heating load calculation	**37631**	**Btuh**	**Total cooling load calculation**	**33543**	**Btuh**
Submitted heating capacity	% of calc	Btuh	Submitted cooling capacity	% of calc	Btuh
Total (Electric Heat Pump)	119.6	45000	Sensible (SHR = 0.75)	141.6	33750
Heat Pump + Auxiliary(0.0kW)	119.6	45000	Latent	115.9	11250
			Total (Electric Heat Pump)	134.2	45000

WINTER CALCULATIONS

Winter Heating Load (for 2282 sqft)

Load component			Load	
Window total	206	sqft	5816	Btuh
Wall total	1867	sqft	5254	Btuh
Door total	120	sqft	2021	Btuh
Ceiling total	2367	sqft	3077	Btuh
Floor total	250	ft	7900	Btuh
Infiltration	274	cfm	11771	Btuh
Subtotal			**35839**	**Btuh**
Duct loss			1792	Btuh
TOTAL HEAT LOSS			**37631**	**Btuh**

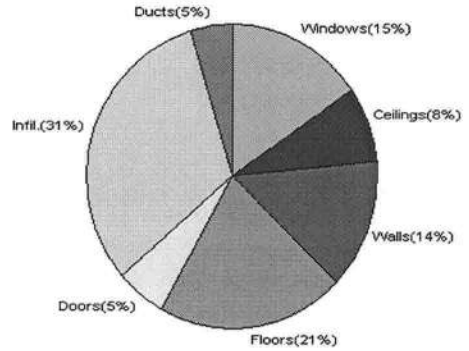

SUMMER CALCULATIONS

Summer Cooling Load (for 2282 sqft)

Load component			Load	
Window total	206	sqft	6338	Btuh
Wall total	1867	sqft	2999	Btuh
Door total	120	sqft	1217	Btuh
Ceiling total	2367	sqft	3361	Btuh
Floor total			0	Btuh
Infiltration	240	cfm	4754	Btuh
Internal gain			3000	Btuh
Subtotal(sensible)			**21669**	**Btuh**
Duct gain			2167	Btuh
Total sensible gain			**23836**	**Btuh**
Latent gain(infiltration)			8326	Btuh
Latent gain(internal)			1380	Btuh
Total latent gain			**9706**	**Btuh**
TOTAL HEAT GAIN			**33543**	**Btuh**

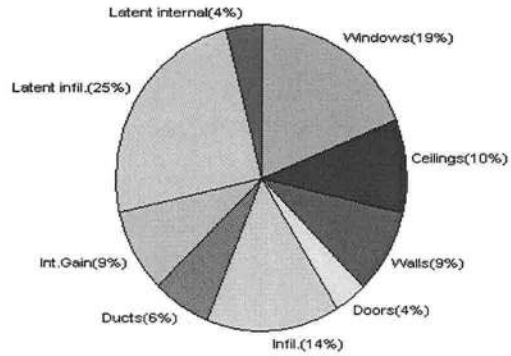

EnergyGauge® System Sizing based on ACCA Manual J.
PREPARED BY: _____
DATE: 3/2/05

System Sizing Calculations - Winter

Residential Load - Component Details

Stephenson
231 SW Bonanza Glen
Lake City, FL

Project Title:
502044StephensonRes

Class 3 Rating
Registration No. 0
Climate: North

Reference City: Gainesville (Defaults) Winter Temperature Difference: 39.0 F

3/2/2005

Window	Panes/SHGC/Frame/U	Orientation	Area X	HTM=	Load
1	2, Clear, Metal, DEF	N	20.0	28.3	566 Btuh
2	2, Clear, Metal, DEF	N	20.0	28.3	566 Btuh
3	2, Clear, Metal, DEF	N	12.0	28.3	340 Btuh
4	2, Clear, Metal, DEF	E	10.0	28.3	283 Btuh
5	2, Clear, Metal, DEF	E	15.0	28.3	424 Btuh
6	2, Clear, Metal, DEF	S	30.0	28.3	849 Btuh
7	2, Clear, Metal, DEF	S	15.0	28.3	424 Btuh
8	2, Clear, Metal, DEF	S	60.0	28.3	1698 Btuh
9	2, Clear, Metal, DEF	S	20.0	28.3	566 Btuh
10	2, Clear, Metal, DEF	W	3.5	28.3	99 Btuh
	Window Total		206		5816 Btuh
Walls	Type	R-Value	Area X	HTM=	Load
1	Frame - Exterior	13.0	1451	3.1	4498 Btuh
2	Frame - Exterior	13.0	60	3.1	186 Btuh
3	Frame - Adjacent	13.0	356	1.6	570 Btuh
	Wall Total		1867		5254 Btuh
Doors	Type		Area X	HTM=	Load
1	Insulated - Exter		60	18.3	1100 Btuh
2	Insulated - Exter		40	18.3	733 Btuh
3	Insulated - Adjac		20	9.4	188 Btuh
	Door Total		120		2021Btuh
Ceilings	Type	R-Value	Area X	HTM=	Load
1	Under Attic	30.0	2367	1.3	3077 Btuh
	Ceiling Total		2367		3077Btuh
Floors	Type	R-Value	Size X	HTM=	Load
1	Slab-On-Grade Edge Insul	0	250.0 ft(p)	31.6	7900 Btuh
	Floor Total		250		7900 Btuh
Infiltration	Type	ACH X	Building Volume	CFM=	Load
	Natural	0.80	20538(sqft)	274	11771 Btuh
	Mechanical			0	0 Btuh
	Infiltration Total			274	11771 Btuh

Totals for Heating	**Subtotal**	**35839 Btuh**
	Duct Loss(using duct multiplier of 0.05)	**1792 Btuh**
	Total Btuh Loss	**37631 Btuh**

Manual J Winter Calculations

Residential Load - Component Details (continued)

Stephenson	Project Title:	Class 3 Rating
231 SW Bonanza Glen	502044StephensonRes	Registration No. 0
Lake City, FL		Climate: North
		3/2/2005

Key: Window types (SHGC - Shading coefficient of glass as SHGC numerical value or as clear or tint)
(Frame types - metal, wood or insulated metal)
(U - Window U-Factor or 'DEF' for default)
(HTM - ManualJ Heat Transfer Multiplier)

Key: Floor size (perimeter(p) for slab-on-grade or area for all other floor types)

System Sizing Calculations - Summer

Residential Load - Component Details

Stephenson
231 SW Bonanza Glen
Lake City, FL

Project Title:
502044StephensonRes

Class 3 Rating
Registration No. 0
Climate: North

Reference City: Gainesville (Defaults) Summer Temperature Difference: 18.0 F 3/2/2005

Window	Type Panes/SHGC/U/InSh/ExSh	Ornt	Overhang Len	Overhang Hgt	Window Area(sqft) Gross	Shaded	Unshaded	HTM Shaded	HTM Unshaded	Load
1	2, Clear, DEF, N, N	N	0	0	20.0	0.0	20.0	22	22	440 Btuh
2	2, Clear, DEF, N, N	N	6.5	8.5	20.0	0.0	20.0	22	22	440 Btuh
3	2, Clear, DEF, N, N	N	6.5	5.5	12.0	0.0	12.0	22	22	264 Btuh
4	2, Clear, DEF, N, N	E	1.5	5.5	10.0	0.0	10.0	22	72	720 Btuh
5	2, Clear, DEF, N, N	E	1.5	6.5	15.0	0.0	15.0	22	72	1080 Btuh
6	2, Clear, DEF, N, N	S	0	0	30.0	0.0	30.0	22	37	1110 Btuh
7	2, Clear, DEF, N, N	S	1.5	6.5	15.0	15.0	0.0	22	37	330 Btuh
8	2, Clear, DEF, N, N	S	9.5	6.5	60.0	60.0	0.0	22	37	1320 Btuh
9	2, Clear, DEF, N, N	S	9.5	8.5	20.0	20.0	0.0	22	37	440 Btuh
10	2, Clear, DEF, N, N	W	1.5	2.5	3.5	1.2	2.3	22	72	194 Btuh
	Window Total				206					6338 Btuh

Walls	Type	R-Value	Area	HTM	Load
1	Frame - Exterior	13.0	1451.0	1.7	2525 Btuh
2	Frame - Exterior	13.0	60.0	1.7	104 Btuh
3	Frame - Adjacent	13.0	356.0	1.0	370 Btuh
	Wall Total		1867.0		2999 Btuh

Doors	Type	Area	HTM	Load
1	Insulated - Exter	60.0	10.1	608 Btuh
2	Insulated - Exter	40.0	10.1	406 Btuh
3	Insulated - Adjac	20.0	10.1	203 Btuh
	Door Total	120.0		1217 Btuh

Ceilings	Type/Color	R-Value	Area	HTM	Load
1	Under Attic/Dark	30.0	2367.0	1.4	3361 Btuh
	Ceiling Total		2367.0		3361 Btuh

Floors	Type	R-Value	Size	HTM	Load
1	Slab-On-Grade Edge Insulation	0.0	250.0 ft(p)	0.0	0 Btuh
	Floor Total		250.0		0 Btuh

Infiltration	Type	ACH	Volume	CFM=	Load
	Natural	0.70	20538	240.1	4754 Btuh
	Mechanical			0	0 Btuh
	Infiltration Total			240	4754 Btuh

Internal gain	Occupants	Btuh/occupant		Appliance	Load
	6	X 300	+	1200	3000 Btuh

Manual J Summer Calculations

Residential Load - Component Details (continued)

Stephenson
231 SW Bonanza Glen
Lake City, FL

Project Title:
502044StephensonRes

Class 3 Rating
Registration No. 0
Climate: North

3/2/2005

Totals for Cooling	Subtotal	21669	Btuh
	Duct gain(using duct multiplier of 0.10)	2167	Btuh
	Total sensible gain	23836	Btuh
	Latent infiltration gain (for 51 gr. humidity difference)	8326	Btuh
	Latent occupant gain (6 people @ 230 Btuh per person)	1380	Btuh
	Latent other gain	0	Btuh
	TOTAL GAIN	33543	Btuh

Key: Window types (SHGC - Shading coefficient of glass as SHGC numerical value or as clear or tint)
(U - Window U-Factor or 'DEF' for default)
(InSh - Interior shading device: none(N), Blinds/Daperies(B) or Roller Shades(R))
(ExSh - Exterior shading device: none(N) or numerical value)
(Ornt - compass orientation)

COLUMBIA COUNTY, FLORIDA
BUILDING AND ZONING DEPART.
P.O. BOX 1529
LAKE CITY, FL 32056-1529

COLUMBIA COUNTY - GATEWAY TO FLORIDA -

Fax

To:	EDGLEY CONSTRUCTION	**From:**	BRIAN L. KEPNER, COUNTY PLANNER
Fax:	752.4904	**Pages:**	3 (Including cover sheet)
Phone:		**Date:**	10 JUNE 05
Re:	Flood Prone Lot	**CC:**	

☐ **Urgent** ☐ **For Review** ☐ **Please Comment** ☐ **Please Reply** ☐ **Please Recycle**

• **Comments:**

I have received information from an adjoining property owner that Lot 8 of Southern Approaches, Unit 1 Subdivision did have standing water back during the hurricanes of 2004. Attached are additional requirement that will need to be submitted before a building permit can be issued.

Brian

District No. 1 - Ronald Williams
District No. 2 - Dewey Weaver
District No. 3 - George Skinner
District No. 4 - Jennifer Flinn
District No. 5 - Elizabeth Porter

BOARD OF COUNTY COMMISSIONERS • COLUMBIA COUNTY

May 11, 2005

MEMO

TO: Who It May Concern

FR: Dale Williams, County Manager Dale Williams

RE: Flood Prone Lots – Additional Permitting Requirements

This is to advise that lots or acreage which have been identified as "flood prone" are subject to the following additional requirements prior to an application for a development permit through the county Building Department:

The applicant for a development permit shall submit in addition to all other required submittals a grading plan for the lot or acreage in which the development order is applied for. The grading plan shall be signed and sealed by a registered professional engineer. The grading plan shall show proposed changes from natural ground elevation, if any including the amount of fill material to be added to the site. The grading plan shall clearly demonstrate that the natural flow of water shall not be altered nor will adjoining properties be negatively impacted by the proposed development. The grading plan shall also establish the lowest habitable floor elevation and building location on the lot or acreage.

In addition to the above, all "flood prone" lots or acreage shall require a letter from the Suwannee River Water Management District or a competent licensed professional stating that the lot is not defined as a wetland in accordance with Florida Law.

For the purposes of these additional permitting requirements "flood prone" is defined as those lots and / or acreage that can be demonstrated on existing maps as flood prone or in which personal testimony will establish as having a history of flooding.

Any party that is subject to these additional permitting requirements and believes they are inappropriately applied in a given application may appeal to the Board of County Commissioners. Appeals shall be made in writing and shall be mailed to:

Columbia County Commissioners
Post Office Box 1529
Lake City, Florida 32056-1529

DW/cnb

XC: Board of County Commissioners
John Kerce, Chief Building Official
Brian Kepner, County Planner
Marlin Feagle, County Attorney
John Colson, P.E.

COLUMBIA COUNTY BUILDING DEPARTMENT

RESIDENTIAL MINIMUM PLAN REQUIREMENTS AND CHECKLIST FOR FLORIDA BUILDING CODE 2001 ONE (1) AND TWO (2) FAMILY DWELLINGS

ALL REQUIREMENTS ARE SUBJECT TO CHANGE
EFFECTIVE MARCH 1, 2002

ALL BUILDING PLANS MUST INDICATE THE FOLLOWING ITEMS AND INDICATE COMPLIANCE WITH CHAPTER 1606 OF THE FLORIDA BUILDING CODE 2001 BY PROVIDING CALCULATIONS AND DETAILS THAT HAVE THE SEAL AND SIGNATURE OF A CERTIFIED ARCHITECT OR ENGINEER REGISTERED IN THE STATE OF FLORIDA, OR ALTERNATE METHODOLOGIES, APPROVED BY THE STATE OF FLORIDA BUILDING COMMISSION FOR ONE-AND-TWO FAMILY DWELLINGS. FOR DESIGN PURPOSES THE FOLLOWING BASIC WIND SPEED AS PER FIGURE 1606 SHALL BE USED.

WIND SPEED LINE SHALL BE DEFINED AS FOLLOWS: THE CENTERLINE OF INTERSTATE 75.

1. ALL BUILDINGS CONSTRUCTED EAST OF SAID LINE SHALL BE -------- 100 MPH
2. ALL BUILDINGS CONSTRUCTED WEST OF SAID LINE SHALL BE --------110 MPH
3. NO AREA IN COLUMBIA COUNTY IS IN A WIND BORNE DEBRIS REGION

APPLICANT – PLEASE CHECK ALL APPLICABLE BOXES BEFORE SUBMITTAL

GENERAL REQUIREMENTS; Two (2) complete sets of plans containing the following:

Applicant	Plans Examiner	
☑	☑	All drawings must be clear, concise and drawn to scale ("Optional " details that are not used shall be marked void or crossed off). Square footage of different areas shall be shown on plans.
☑	☐	Designers name and signature on document (FBC 104.2.1). If licensed architect or engineer, official seal shall be affixed.
☑	☐	**Site Plan including:** a) Dimensions of lot b) Dimensions of building set backs c) Location of all other buildings on lot, well and septic tank if applicable, and all utility easements. d) Provide a full legal description of property.
☑	☑	**Wind-load Engineering Summary, calculations and any details required** a) Plans or specifications must state compliance with FBC Section 1606 b) The following information must be shown as per section 1606.1.7 FBC a. Basic wind speed (MPH) b. Wind importance factor (I) and building category c. Wind exposure – if more than one wind exposure is used, the wind exposure and applicable wind direction shall be indicated d. The applicable internal pressure coefficient e. Components and Cladding. The design wind pressure in terms of psf (kN/m²), to be used for the design of exterior component and cladding materials not specifically designed by the registered design professional
☑	☑	**Elevations including:**
☑	☑	a) All sides
☑	☐	b) Roof pitch
☐	☐	c) Overhang dimensions and detail with attic ventilation
☐	☐ Note 3	d) Location, size and height above roof of chimneys None shown
☑	☐	e) Location and size of skylights in Bathrooms
☑	☐	f) Building height
☑	☐ See note	e) Number of stories 1

Floor Plan including:

a) Rooms labeled and dimensioned

b) Shear walls

c) Windows and doors (including garage doors) showing size, mfg., approval listing and attachment specs. (FBC 1707) and safety glazing where needed (egress windows in bedrooms to be shown) See NOT 4

d) Fireplaces (gas appliance) (vented or non-vented) or wood burning with hearth NONE Shown

e) Stairs with dimensions (width, tread and riser) and details of guardrails and handrails NONE Shown

f) Must show and identify accessibility requirements (accessible bathroom)

Foundation Plan including:

a) Location of all load-bearing wall with required footings indicated as standard Or monolithic and dimensions and reinforcing

b) All posts and/or column footing including size and reinforcing

c) Any special support required by soil analysis such as piling

d) Location of any vertical steel NONE Shown

Roof System:

a) Truss package including:

1. Truss layout and truss details signed and sealed by Fl. Pro. Eng.
2. Roof assembly (FBC 104.2.1 Roofing system, materials, manufacturer, fastening requirements and product evaluation with wind resistance rating) See Note 5

b) Conventional Framing Layout including:

1. Rafter size, species and spacing
2. Attachment to wall and uplift
3. Ridge beam sized and valley framing and support details
4. Roof assembly (FBC 104.2.1 Roofing systems, materials, manufacturer, fastening requirements and product evaluation with wind resistance rating)

Wall Sections including:

a) Masonry wall

1. All materials making up wall
2. Block size and mortar type with size and spacing of reinforcement
3. Lintel, tie-beam sizes and reinforcement
4. Gable ends with rake beams showing reinforcement or gable truss and wall bracing details
5. All required connectors with uplift rating and required number and size of fasteners for continuous tie from roof to foundation
6. Roof assembly shown here or on roof system detail (FBC 104.2.1 Roofing system, materials, manufacturer, fastening requirements and product evaluation with resistance rating)
7. Fire resistant construction (if required)
8. Fireproofing requirements
9. Shoe type of termite treatment (termicide or alternative method)
10. Slab on grade
    a. Vapor retardant (6mil. Polyethylene with joints lapped 6 inches and sealed)
    b. Must show control joints, synthetic fiber reinforcement or Welded fire fabric reinforcement and supports
11. Indicate where pressure treated wood will be placed
12. Provide insulation R value for the following:
    a. Attic space
    b. Exterior wall cavity
    c. Crawl space (if applicable)

☑ ☐ **b) Wood frame wall**

1. All materials making up wall
2. Size and species of studs
3. Sheathing size, type and nailing schedule
4. Headers sized
5. Gable end showing balloon framing detail or gable truss and wall hinge bracing detail (See Note 6)
6. All required fasteners for continuous tie from roof to foundation (truss anchors, straps, anchor bolts and washers)
7. Roof assembly shown here or on roof system detail (FBC104.2.1 Roofing system, materials, manufacturer, fastening requirements and product evaluation with wind resistance rating)
8. Fire resistant construction (if applicable) (See Note 9)
9. Fireproofing requirements
10. Show type of termite treatment (termicide or alternative method)
11. Slab on grade
    a. Vapor retardant (6Mil. Polyethylene with joints lapped 6 inches and sealed
    b. Must show control joints, synthetic fiber reinforcement or welded wire fabric reinforcement and supports
12. Indicate where pressure treated wood will be placed
13. Provide insulation R value for the following:
    a. Attic space
    b. Exterior wall cavity
    c. Crawl space (if applicable)

☐ ☐ c) Metal frame wall and roof (designed, signed and sealed by Florida Prof. Engineer or Architect)

Floor Framing System:

☐ ☐ a) Floor truss package including layout and details, signed and sealed by Florida Registered Professional Engineer

☐ ☐ b) Floor joist size and spacing

☐ ☐ c) Girder size and spacing

☐ ☐ d) Attachment of joist to girder

☐ ☐ e) Wind load requirements where applicable

☐ ☐ **Plumbing Fixture layout**

Electrical layout including:

☑ ☐ a) Switches, outlets/receptacles, lighting and all required GFCI outlets identified

☑ ☐ b) Ceiling fans

☑ ☐ c) Smoke detectors

☑ ☐ d) Service panel and sub-panel size and location(s) (See Note 10)

☑ ☐ e) Meter location with type of service entrance (overhead or underground)

☑ ☐ f) Appliances and HVAC equipment

☑ ☐ g) Arc Fault Circuits (AFCI) in bedrooms

HVAC information

☑ ☐ a) Manual J sizing equipment or equivalent computation

☑ ☐ b) Exhaust fans in bathroom

☑ ☐ **Energy Calculations** (dimensions shall match plans)

☐ ☐ **Gas System** Type (LP or Natural) Location and BTU demand of equipment

☐ ☐ **Disclosure Statement for Owner Builders**

☑ ☐ ***Notice Of Commencement Required Before Any Inspections Will Be Done**

☐ ☐ **Private Potable Water**

a) Size of pump motor

b) Size of pressure tank

c) Cycle stop valve if used

Columbia County Building Permit Application

CK # 1304 Revised 9-23-04

For Office Use Only Application # 0505-24 Date Received 05/06/05 By JW Permit # 838/23695

Application Approved by - Zoning Official BLK Date 05/10/05 Plans Examiner OKJTH Date 5-27-05

Flood Zone X per plat Development Permit N/A Zoning RMF-1 Land Use Plan Map Category RES. MOD. DEN.

Comments NOC NEEDED PRIOR TO 1st INSPECTION

Applicants Name KIMMY EDGLEY Phone 386-752-0580

Address 590 SW ARLINGTON BLVD, SUITE 105, LAKE CITY FL 32025

Owners Name JAMES G. AND DEBORAH G. STEPHENSON Phone 386-752-0580

911 Address 231 SW BONANZA GLEN, LAKE CITY FL 32025

Contractors Name EDGLEY CONSTRUCTION CO. Phone 386-752-0580

Address 590 SW ARLINGTON BLVD, SUITE 105, LAKE CITY FL 32025

Fee Simple Owner Name & Address JAMES G. AND DEBORAH G. STEPHENSON

Bonding Co. Name & Address N/A

Architect/Engineer Name & Address MARK DISOSWAY P.E., P.O. BOX 868, LAKE CITY FL 32056

Mortgage Lenders Name & Address FFSB, P.O. BOX 2029, LAKE CITY FL 32056-2029

Circle the correct power company - FL Power & Light - (Clay Elec.) - Suwannee Valley Elec. - Progressive Energy

Property ID Number 13-4S-16-02952-208 Estimated Cost of Construction $200,000.00

Subdivision Name SOUTHERN APPROACHES Lot 8 Block ____ Unit 1 Phase ____

Driving Directions HWY 90 WEST, TL ON SISTERS WELCOME ROAD, TL ON BUSINESS POINT DRIVE, TL ON BONANZA GLEN, 8th LOT ON LEFT

Type of Construction RESIDENTIAL HOME & HANGAR Number of Existing Dwellings on Property N/A

Total Acreage .505 Lot Size ____ Do you need a - (Culvert Permit) or Culvert Waiver or Have an Existing Drive

Actual Distance of Structure from Property Lines - Front 40 Side 11'-5" Side 11'-5" Rear 78' 11"

Total Building Height 25'8" Number of Stories 1 Heated Floor Area 2282 4361 Roof Pitch 6/12

Application is hereby made to obtain a permit to do work and installations as indicated. I certify that no work or installation has commenced prior to the issuance of a permit and that all work be performed to meet the standards of all laws regulating construction in this jurisdiction.

OWNERS AFFIDAVIT: I hereby certify that all the foregoing information is accurate and all work will be done in compliance with all applicable laws and regulating construction and zoning.

WARNING TO OWNER: YOUR FAILURE TO RECORD A NOTICE OF COMMENCMENT MAY RESULT IN YOU PAYING TWICE FOR IMPROVEMENTS TO YOUR PROPERTY. IF YOU INTEND TO OBTAIN FINANCING, CONSULT WITH YOUR LENDER OR ATTORNEY BEFORE RECORDING YOUR NOTICE OF COMMENCEMENT.

Kimmy Edgley - Agent
Owner Builder or Agent (Including Contractor)

Contractor Signature

Contractors License Number RR2828211326

Competency Card Number 5364

NOTARY STAMP/SEAL

STATE OF FLORIDA
COUNTY OF COLUMBIA

Sworn to (or affirmed) and subscribed before me this 6TH day of May 2005.

Personally known ✓ or Produced Identification ____

Jan Clark

Notary Signature

NOTARY PUBLIC STATE OF FLORIDA
JAN CLARK
MY COMMISSION # DD 181635
EXPIRES: March 28, 2007
Bonded Thru Budget Notary Services

X
Glazed Inswing Unit

WOOD-EDGE STEEL DOORS

APPROVED ARRANGEMENT:

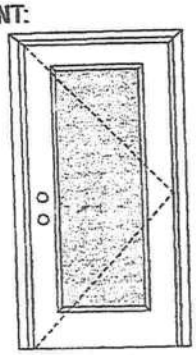

Note:
Units of other sizes are covered by this report as long as the panel used does not exceed 3'0" x 6'8".

Warnock Hersey

Test Data Review Certificate #3026447A and COP/Test Report Validation Matrix #3026447A-001 provides additional information - available from the ITS/WH website (www.etlsemko.com), the Masonite website (www.masonite.com) or the Masonite technical center.

Single Door
Maximum unit size = 3'0" x 6'8"

Design Pressure
+40.5/-40.5
Limited water unless special threshold design is used.

Large Missile Impact Resistance
Hurricane protective system (shutters) is REQUIRED.

Actual design pressure and impact resistant requirements for a specific building design and geographic location is determined by ASCE 7-national, state or local building codes specify the edition required.

MINIMUM ASSEMBLY DETAIL:

Compliance requires that minimum assembly details have been followed – see MAD-WL-MA0001-02 and MAD-WL-MA0041-02.

MINIMUM INSTALLATION DETAIL:

Compliance requires that minimum installation details have been followed – see MID-WL-MA0001-02.

APPROVED DOOR STYLES:

1/4 GLASS:


100 Series

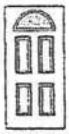
133, 135 Series


136 Series


680 Series


822 Series

1/2 GLASS:

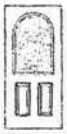
105 Series*

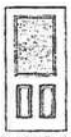
106, 160 Series*


129 Series*

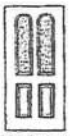
200 Series*


12 R/L, 23 R/L, 24 R/L Series*


107 Series*


108 Series


304 Series

*This glass kit may also be used in the following door styles: 5-panel; 5-panel with scroll; Eyebrow 5-panel; Eyebrow 5-panel with scroll.

Johnson™ EntrySystems

June 17, 2002
Our continuing program of product improvement makes specifications, design and product detail subject to change without notice.

PREMDOR Collection Premium Quality Doors

Exclusively from Masonite®
Masonite International Corporation

WOOD-EDGE STEEL DOORS

APPROVED DOOR STYLES:

3/4 GLASS:

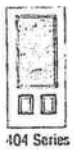
404 Series


410 Series


450 Series

FULL GLASS:

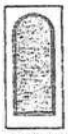
109 Series


114, 120, 122 Series

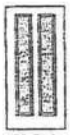
152 Series


149 Series


300 Series

CERTIFIED TEST REPORTS:

NCTL 210-1897-7, 8, 9, 10, 11, 12; NCTL 210-1861-4, 5, 6, 10, 11, 12; NCTL 210-2185-1, 2, 3

Certifying Engineer and License Number: Barry D. Portney, P.E. / 16258.

Unit Tested in Accordance with Miami-Dade BCCO PA202.

Evaluation report NCTL-210-2794-1

Door panels constructed from 26-gauge 0.017" thick steel skins. Both stiles constructed from wood. Top end rails constructed of 0.041" steel. Bottom end rails constructed of 0.021" steel. Interior cavity of slab filled with rigid polyurethane foam core. Slab glazed with insulated glass mounted in a rigid plastic lip lite surround.

Frame constructed of wood with an extruded aluminum threshold.

PRODUCT COMPLIANCE LABELING:

TESTED IN
ACCORDANCE WITH
MIAMI-DADE BCCO PA202

COMPANY NAME
CITY, STATE

To the best of my knowledge and ability the above side-hinged exterior door unit conforms to the requirements of the 2001 Florida Building Code, Chapter 17 (Structural Tests and Inspections).

Kurt L Balthazor

State of Florida, Professional Engineer
Kurt Balthazor, P.E. – License Number 56533

Warnock Hersey

Test Data Review Certificate #3026447A and COP/Test Report Validation Matrix #3026447A-001 provides additional information - available from the ITS/WH website (www.etlsemko.com), the Masonite website (www.masonite.com) or the Masonite technical center.

Johnson™ EntrySystems

June 17, 2002
Our continuing program of product improvement makes specifications, design and product detail subject to change without notice.

PREMDOR Collection Premium Quality Doors

Exclusively from Masonite®
Masonite International Corporation

XX
Glazed Inswing Unit

WOOD-EDGE STEEL DOORS

APPROVED ARRANGEMENT:

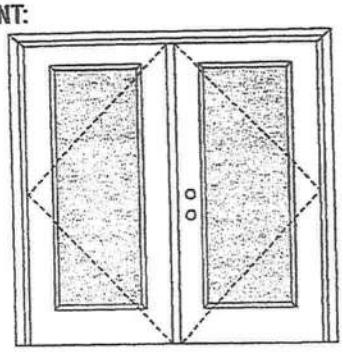

Double Door
Maximum unit size = 6'0" x 6'8"

Warnock Hersey

Test Data Review Certificate #3026447A and COP/Test Report Validation Matrix #3026447A-001 provides additional information - available from the ITS/WH website (www.etlsemko.com), the Masonite website (www.masonite.com) or the Masonite technical center.

Note:
Units of other sizes are covered by this report as long as the panels used do not exceed 3'0" x 6'8".

Design Pressure
+40.5/-40.5
Limited water unless special threshold design is used.

Large Missile Impact Resistance
Hurricane protective system (shutters) is REQUIRED.

Actual design pressure and impact resistant requirements for a specific building design and geographic location is determined by ASCE 7-national, state or local building codes specify the edition required.

MINIMUM ASSEMBLY DETAIL:

Compliance requires that minimum assembly details have been followed – see MAD-WL-MA0002-02 and MAD-WL-MA0041-02.

MINIMUM INSTALLATION DETAIL:

Compliance requires that minimum installation details have been followed – see MID-WL-MA0002-02.

APPROVED DOOR STYLES:

1/4 GLASS:


100 Series


133, 135 Series


136 Series


680 Series


822 Series

1/2 GLASS:


105 Series*

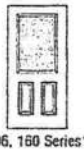
106, 160 Series*

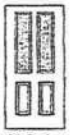
129 Series*


200 Series*

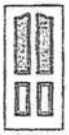
12 R/L, 23 R/L, 24 R/L Series*


107 Series*


108 Series


304 Series

*This glass kit may also be used in the following door styles: 5-panel; 5-panel with scroll; Eyebrow 5-panel; Eyebrow 5-panel with scroll.

Johnson™ EntrySystems

June 17, 2002
Our continuing program of product improvement makes specifications, design and product detail subject to change without notice.

PREMDOR Collection Premium Quality Doors

Exclusively from Masonite®
Masonite International Corporation

WOOD-EDGE STEEL DOORS

APPROVED DOOR STYLES:

3/4 GLASS:


404 Series

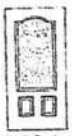
410 Series


450 Series

FULL GLASS:


109 Series

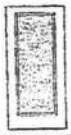
114, 120, 122 Series

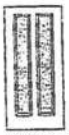
152 Series

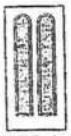
149 Series


300 Series

CERTIFIED TEST REPORTS:

NCTL 210-1897-7, 8, 9, 10, 11, 12; NCTL 210-1861-4, 5, 6, 10, 11, 12; NCTL 210-2185-1, 2, 3

Certifying Engineer and License Number: Barry D. Portney, P.E. / 16258.

Unit Tested in Accordance with Miami-Dade BCCO PA202.

Evaluation report NCTL-210-2794-1

Door panels constructed from 26-gauge 0.017" thick steel skins. Both stiles constructed from wood. Top end rails constructed of 0.041" steel. Bottom end rails constructed of 0.021" steel. Interior cavity of slab filled with rigid polyurethane foam core. Slab glazed with insulated glass mounted in a rigid plastic lip lite surround.

Frame constructed of wood with an extruded aluminum threshold.

PRODUCT COMPLIANCE LABELING:

TESTED IN
ACCORDANCE WITH
MIAMI-DADE BCCO PA202

COMPANY NAME
CITY, STATE

To the best of my knowledge and ability the above side-hinged exterior door unit conforms to the requirements of the 2001 Florida Building Code, Chapter 17 (Structural Tests and Inspections).

Kurt L Balthazor

State of Florida, Professional Engineer
Kurt Balthazor, P.E. – License Number 56533

Warnock Hersey

Test Data Review Certificate #3026447A and COP/Test Report Validation Matrix #3026447A-001 provides additional information - available from the ITS/WH website (www.etlsemko.com), the Masonite website (www.masonite.com) or the Masonite technical center.

WOOD-EDGE STEEL DOORS

APPROVED ARRANGEMENT:

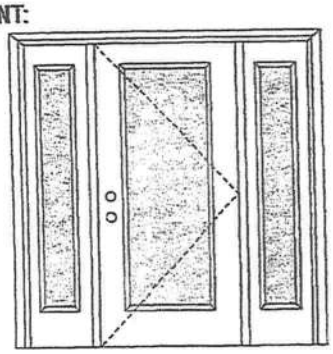

Warnock Hersey

Test Data Review Certificate #3026447A and COP/Test Report Validation Matrix #3026447A-001 provides additional information - available from the ITS/WH website (www.etlsemko.com), the Masonite website (www.masonite.com) or the Masonite technical center.

Note:
Units of other sizes are covered by this report as long as the panels used do not exceed 3'0" x 6'8".

Single Door with 2 Sidelites
Maximum unit size = 9'0" x 6'8"

Design Pressure

+40.5/-40.5

Limited water unless special threshold design is used.

Large Missile Impact Resistance

Hurricane protective system (shutters) is REQUIRED.

Actual design pressure and impact resistant requirements for a specific building design and geographic location is determined by ASCE 7-national, state or local building codes specify the edition required.

MINIMUM ASSEMBLY DETAIL:

Compliance requires that minimum assembly details have been followed – see MAD-WL-MA0004-02 or MAD-WL-MA0007-02 and MAD-WL-MA0041-02.

MINIMUM INSTALLATION DETAIL:

Compliance requires that minimum installation details have been followed – see MID-WL-MA0004-02.

APPROVED DOOR STYLES:

1/4 GLASS:


100 Series

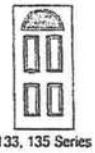
133, 135 Series

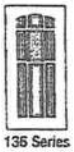
136 Series


680 Series


822 Series

1/2 GLASS:

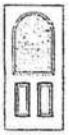
105 Series*

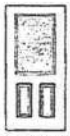
106, 160 Series*

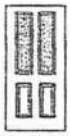
129 Series*

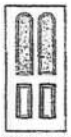
200 Series*

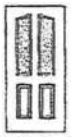
12 R/L, 23 R/L, 24 R/L Series*


107 Series*


108 Series


304 Series

*This glass kit may also be used in the following door styles: 5-panel; 5-panel with scroll; Eyebrow 5-panel; Eyebrow 5-panel with scroll.

Johnson™ EntrySystems

June 17, 2002
Our continuing program of product improvement makes specifications, design and product detail subject to change without notice.

PREMDOR Collection Premium Quality Doors

Exclusively from Masonite®
Masonite International Corporation

OXO

Glazed Inswing Unit

COP-WL-JH4144-02

WOOD-EDGE STEEL DOORS

APPROVED DOOR STYLES:

3/4 GLASS:

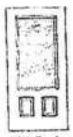

404 Series

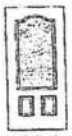

410 Series

450 Series

FULL GLASS:

109 Series

114, 120, 122 Series

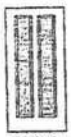

152 Series

149 Series

300 Series

APPROVED SIDELITE STYLES:

680 Series

129 Series

200 Series

12R, 12L, 23R, 23L, 24R, 24L Series

450 Series

152 Series

149 Series

109 Series

120, 122 Series

300 Series

CERTIFIED TEST REPORTS:

NCTL 210-1897-7, 8, 9, 10, 11, 12; NCTL 210-1861-4, 5, 6, 10, 11, 12; NCTL 210-2185-1, 2, 3

Certifying Engineer and License Number: Barry D. Portney, P.E. / 16258.

Unit Tested in Accordance with Miami-Dade BCCO PA202.

Evaluation report NCTL-210-2794-1

Door panels constructed from 26-gauge 0.017" thick steel skins. Both stiles constructed from wood. Top end rails constructed of 0.041" steel. Bottom end rails constructed of 0.021" steel. Interior cavity of slab filled with rigid polyurethane foam core. Slab and sidelite panels glazed with insulated glass mounted in a rigid plastic lip lite surround.

Frame constructed of wood with an extruded aluminum threshold.

PRODUCT COMPLIANCE LABELING:

TESTED IN
ACCORDANCE WITH
MIAMI-DADE BCCO PA202

COMPANY NAME
CITY, STATE

To the best of my knowledge and ability the above side-hinged exterior door unit conforms to the requirements of the 2001 Florida Building Code, Chapter 17 (Structural Tests and Inspections).

Kurt L Bath

State of Florida, Professional Engineer
Kurt Balthazor, P.E. – License Number 56533

Warnock Hersey

Test Data Review Certificate #3026447A and COP/Test Report Validation Matrix #3026447A-001 provides additional information - available from the ITS/WH website (www.etisemko.com), the Masonite website (www.masonite.com) or the Masonite technical center.

Johnson™ EntrySystems

June 17, 2002

PREMDOR Collection Premium Quality Doors

Exclusively from Masonite®
Masonite International Corporation

OXXO
Glazed Inswing Unit

COP-WL-JH4145-02

WOOD-EDGE STEEL DOORS

APPROVED ARRANGEMENT:

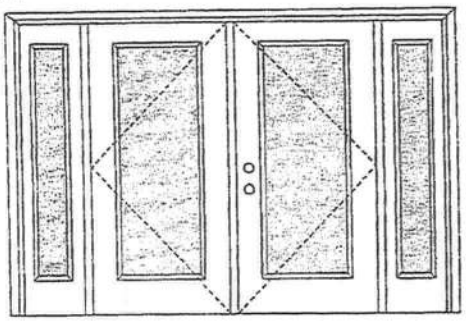

Warnock Hersey

Test Data Review Certificate #3026447A and COP/Test Report Validation Matrix #3026447A-001 provides additional information - available from the ITS/WH website (www.etisemko.com), the Masonite website (www.masonite.com) or the Masonite technical center.

Note:
Units of other sizes are covered by this report as long as the panels used do not exceed 3'0" x 6'8".

Double Door with 2 Sidelites
Maximum unit size = 12'0" x 6'8"

Design Pressure

+40.5/-40.5
Limited water unless special threshold design is used.

Large Missile Impact Resistance

Hurricane protective system (shutters) is REQUIRED.

Actual design pressure and impact resistant requirements for a specific building design and geographic location is determined by ASCE 7-national, state or local building codes specify the edition required.

MINIMUM ASSEMBLY DETAIL:

Compliance requires that minimum assembly details have been followed – see MAD-WL-MA0005-02 or MAD-WL-MA0008-02 and MAD-WL-MA0041-02.

MINIMUM INSTALLATION DETAIL:

Compliance requires that minimum installation details have been followed – see MID-WL-MA0005-02.

APPROVED DOOR STYLES:

1/4 GLASS:


100 Series

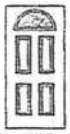
133, 135 Series


136 Series


680 Series


822 Series

1/2 GLASS:

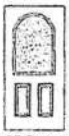
105 Series*

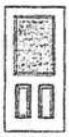
106, 160 Series*

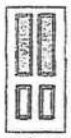
129 Series*


200 Series*


12 R/L, 23 R/L, 24 R/L Series*

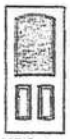
107 Series*


108 Series


304 Series

*This glass kit may also be used in the following door styles: 5-panel; 5-panel with scroll; Eyebrow 5-panel; Eyebrow 5-panel with scroll.

Johnson™ EntrySystems

June 17, 2002
Our continuing program of product improvement makes specifications, design and product detail subject to change without notice.

PREMDOR Collection Premium Quality Doors

Exclusively from Masonite®
Masonite International Corporation

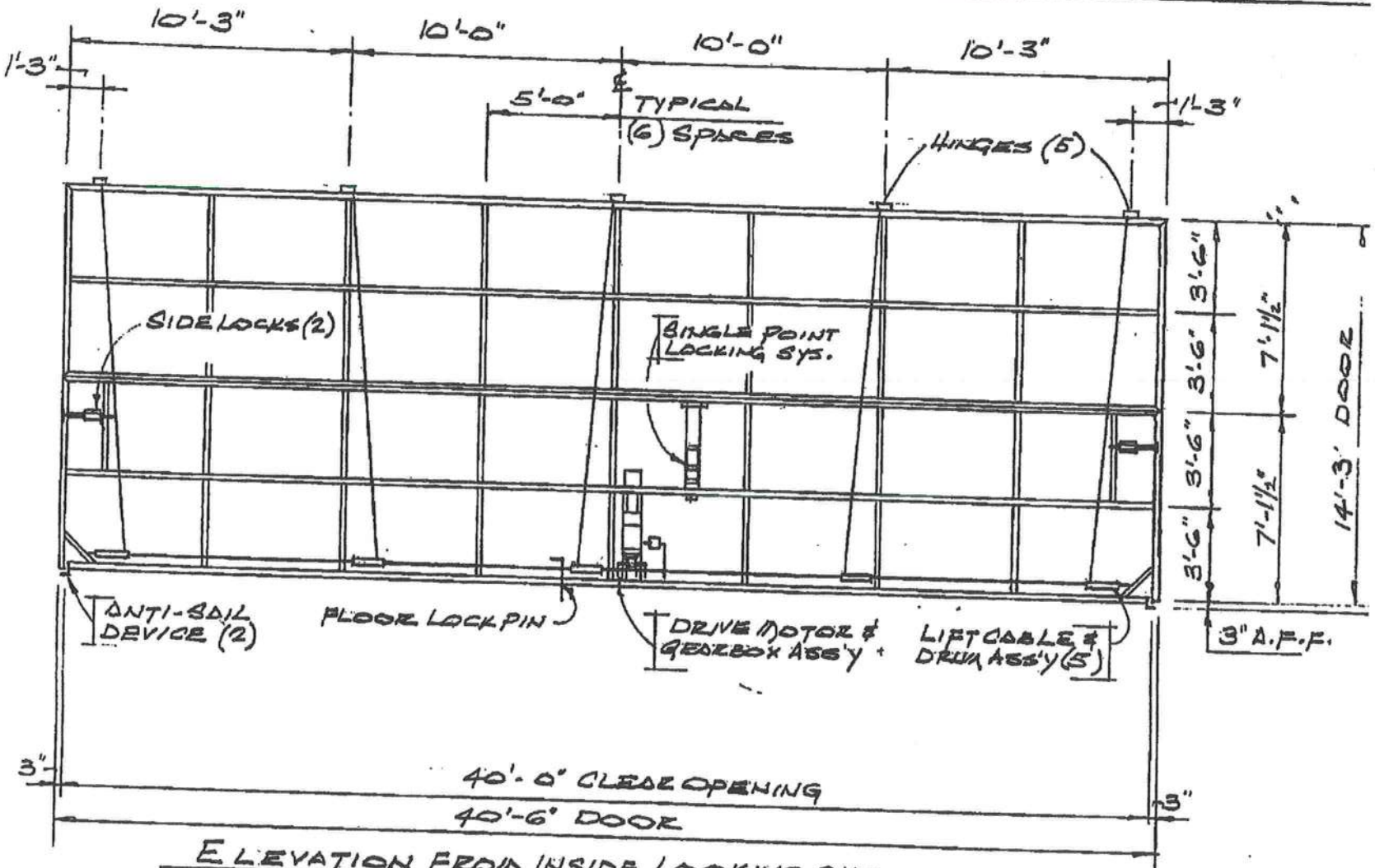

ELEVATION FROM INSIDE LOOKING OUT
SCALE: 3/16" = 1'-0"

ELECTRICAL
230V-1Φ

APPROVED FOR FABRICATION:
DATE:

NOTE! VERIFY WHICH SIDE ELECTRICAL CONN. WILL BE LOCATED.

DRAWN: 09-09-02
CUSTOMER: TYPICAL

40'-6" x 14'-3" BI-FOLD DOOR
W.L. 110 MPH

WELLBILT INDUSTRIES

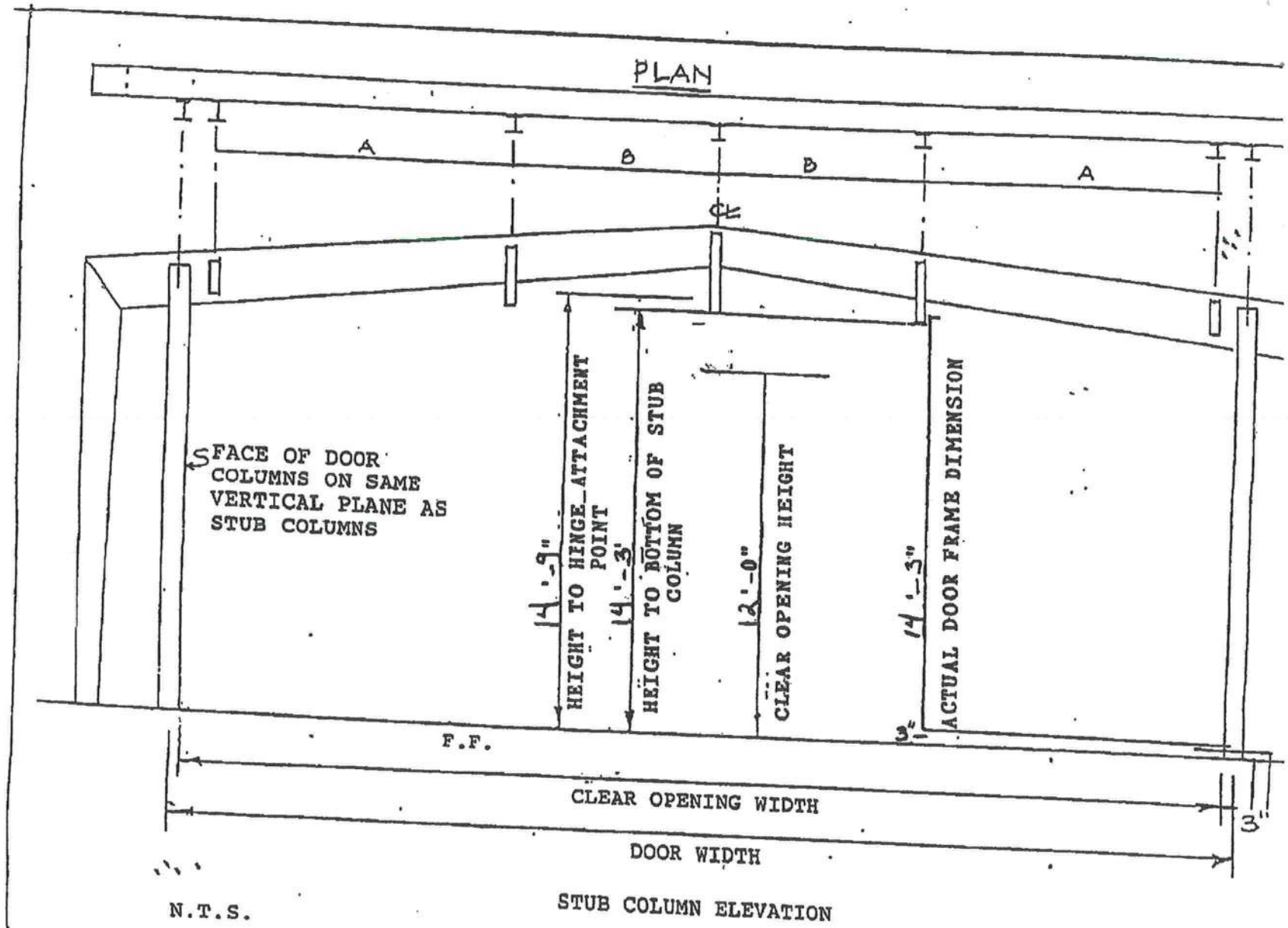

TYPICAL

APPROVED FOR FABRICATION_____

DATE_____

WELL-BILT

WELL BILT INDUSTRIES

1 Well Bilt Road
PO Box 100
Williston, FL 32696-0100
phone (352) 528-5566 toll-free (800) 940-BILT
fax (352) 528-5614
E-mail MWellBilt@aol.com
Web-Site wellbiltdoors.com

WEIGHTS AND BALANCE

Date :

To : **From :** Merle Loock, Office Manager

Company :

Fax:

Phone : ***TYPICAL***

PROJECT:

	DOOR DOWN AND LOCKED
BI-FOLD DOOR CLEAR OPENING SIZE	40'-0" X 12'-0"
ACTUAL DOOR SIZE	40'-6" X 14'-3
DEAD WEIGHT	2,020 LBS.
LOCKS/OPTIONS	INCLUDED IN ABOVE WEIGHT
SHEETING WEIGHT, EXTERIOR (ESTIMATE 1 # per sq. ft.)	577 LBS.
DEAD WEIGHT TOTAL	2,600 LBS.
VERTICAL COLUMN WIND LOAD TRANSFER	75 %
HEADER LOAD TRANSFER	25 %
HORIZONTAL COMPONENT, 2.0 X'S DEAD WEIGHT	5,200 LBS.
HINGE POINTS, WEIGHT EACH (5)	1,040 LBS. HORIZONTAL
	520 LBS. VERTICAL
HORIZONTAL COMPRESSION ON EACH VERTICAL COLUMN	2,600 LBS.

THANK YOU FOR YOUR INTEREST IN WELL BILT INDUSTRIES

BD-104

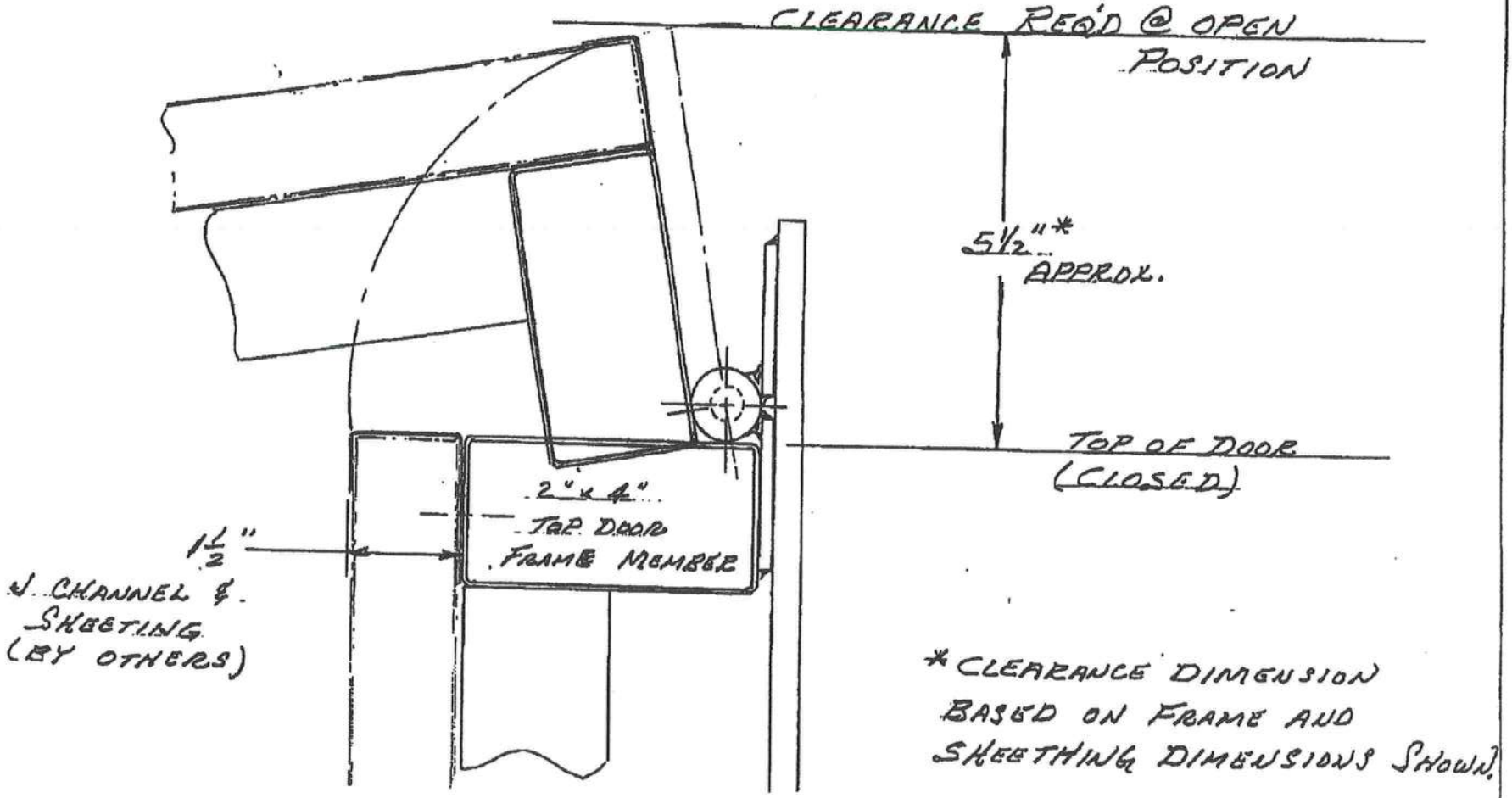

DRAWN 10-02-98 CUSTOMER	OPEN DOOR CLEARANCE - TYPICAL	WELL-BILT INDUSTRIES

BD - 109

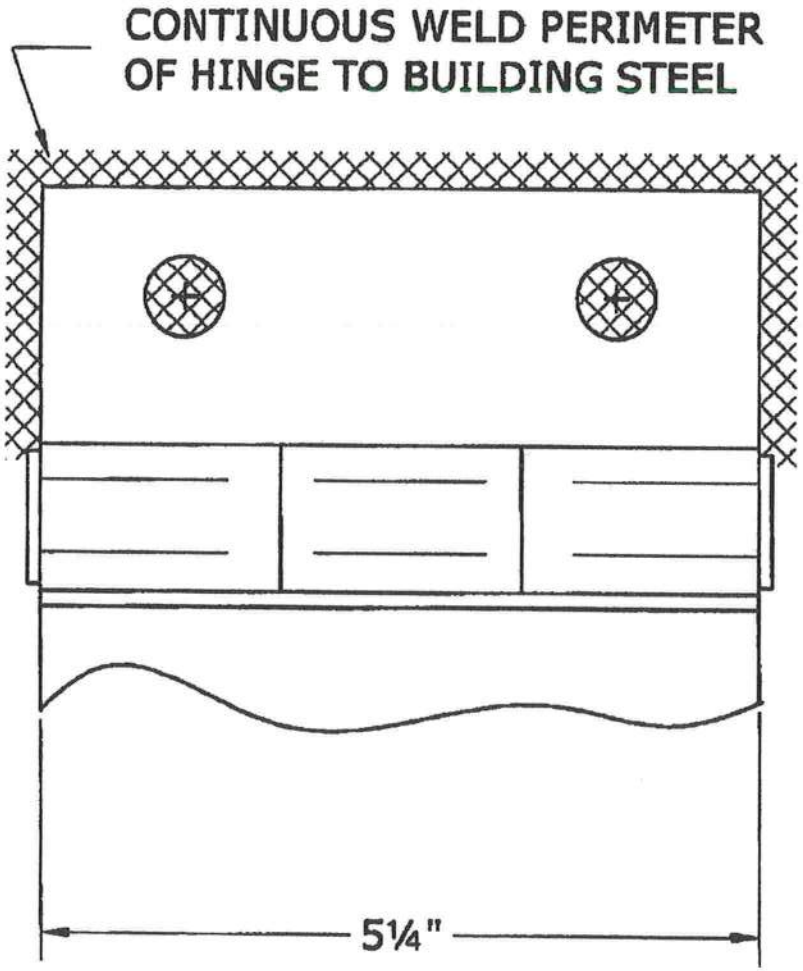

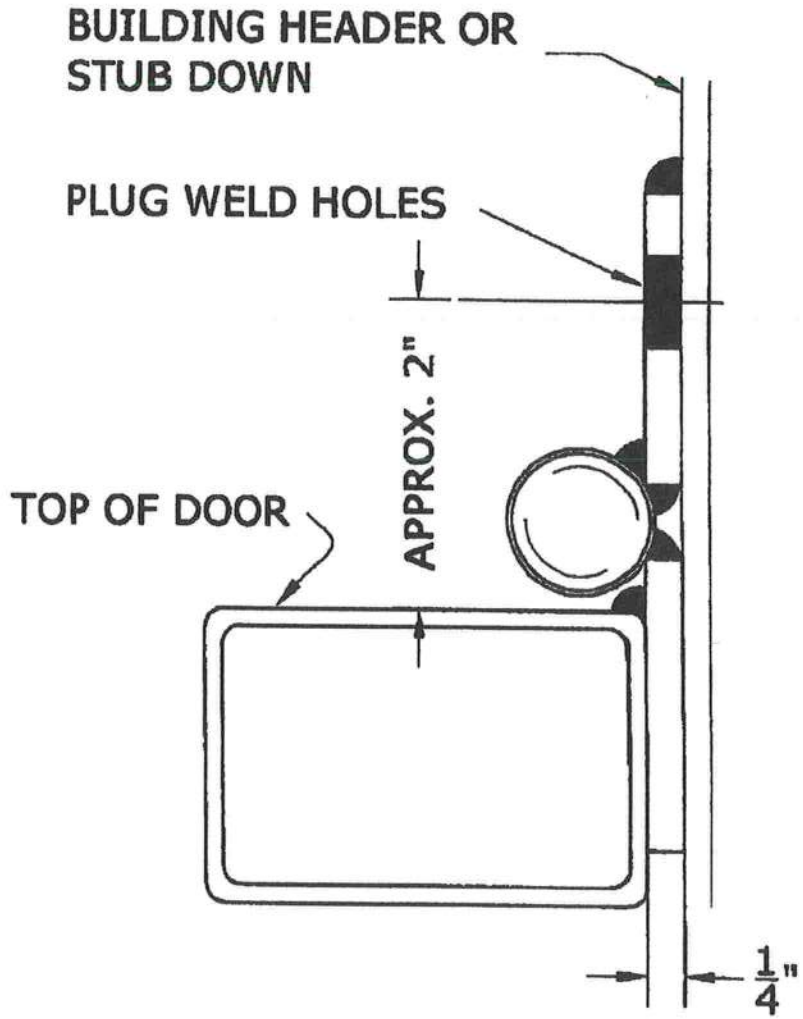

WELL BILT INDUSTRIES TEL: 352-528-5566 FAX: 352-528-5614	***HINGE MOUNTING INSTALLATION DETAILS***	DRAWN: K.MARTIN	DATE: 05-24-04

BD - 112

INSTRUCTIONS WHEN INSTALLING DOOR

REMOVE RETAINER PLATE SCREW FROM BOTH ENDS OF DOOR.
SLIDE SHAFT OUT FAR ENOUGH TO REMOVE ANTI SAIL LUG.

WHEN DOOR IS PERMANENTLY ATTACHED TO BUILDING - REVERSE PROCEEDURE.

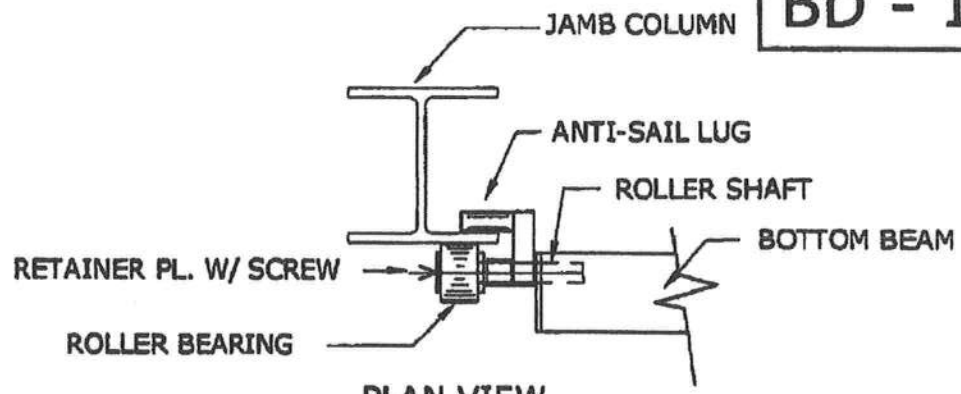

PLAN VIEW

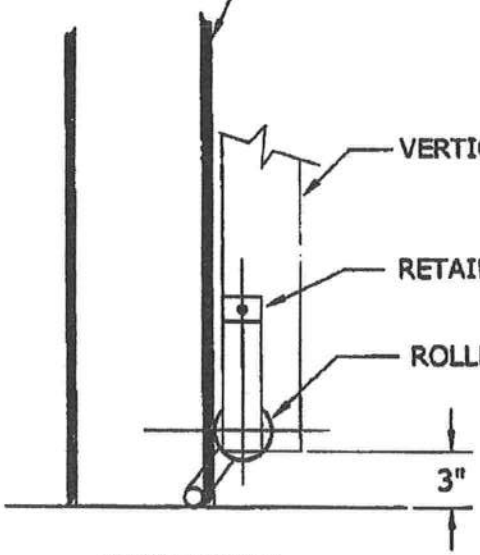

END VIEW

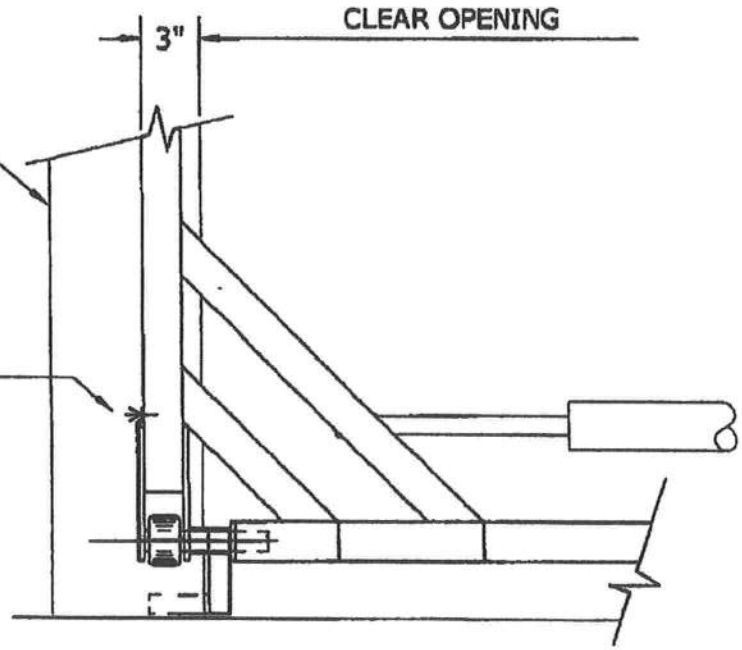

OUTSIDE LEFT END ELEVATION

WELL BILT INDUSTRIES TEL: 352-528-5566 FAX: 352-528-5614	***ANTI SAIL INSTALLATION DETAILS***	DRAWN: K.MARTIN	DATE: 02-03-04

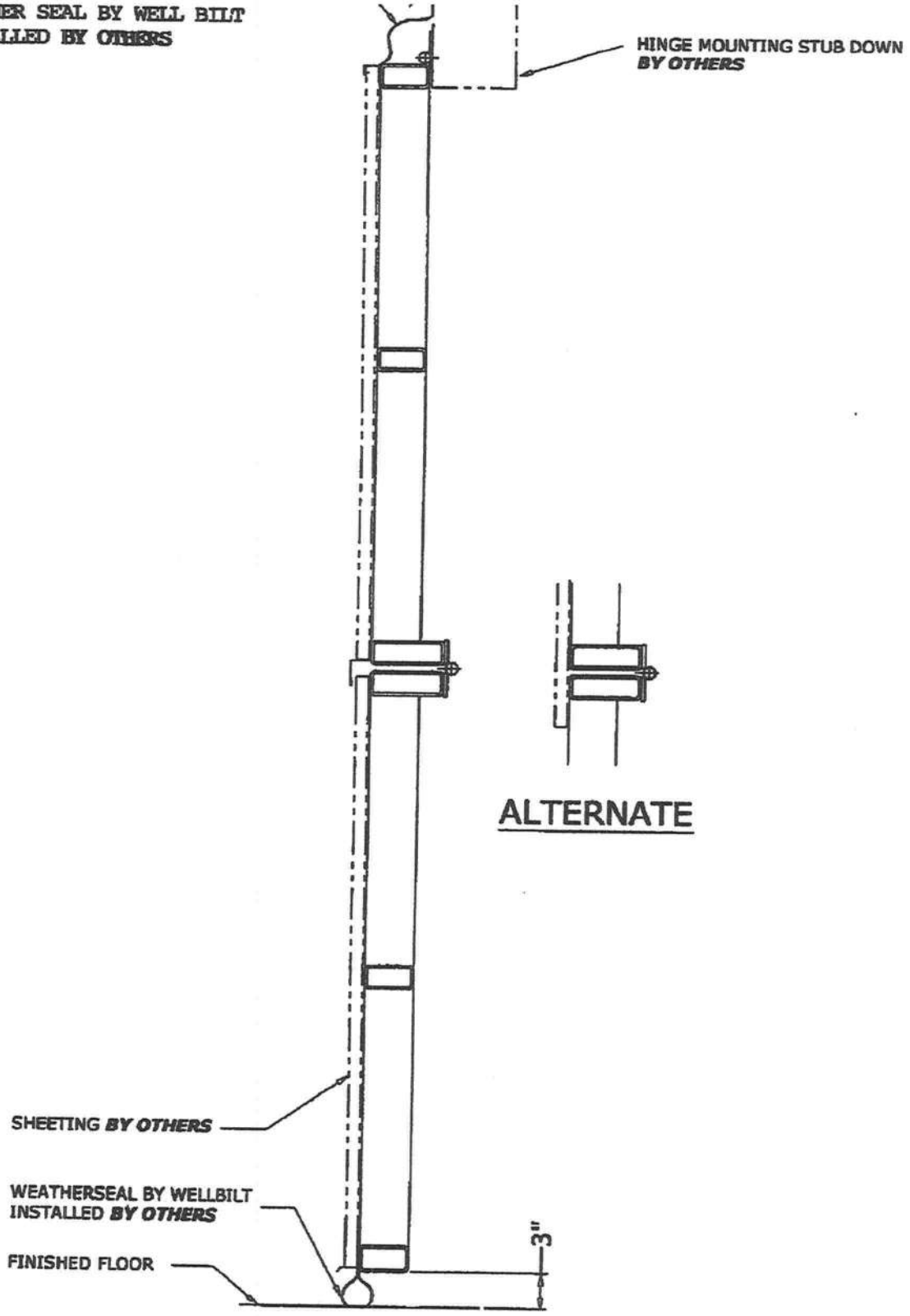

SECTION

DRAWN: K. MARTIN	BI-FOLD SHEETING INSTALLATION	WELL BILT INDUSTRIES
DATE: 11-16-04		TEL: 352-528-5566 FAX: 352-528-5614

AAMA/NWWDA 101/I.S.2-97
TEST REPORT SUMMARY

Rendered to:

MI HOME PRODUCTS, INC.

SERIES/MODEL: 650 Fin
TYPE: Aluminum Single Hung Window

Title of Test	Results
Rating	H-R40 52 x 72
Overall Design Pressure	+45.0 psf -47.2 psf
Operating Force	11 lb max.
Air Infiltration	0.13 cfm/ft^2
Water Resistance	6.00 psf
Structural Test Pressure	+67.5 psf -70.8 psf
Deglazing	Passed
Forced Entry Resistance	Grade 10

Reference should be made to Report No. 01-41134.01 dated 03/26/02 for complete test specimen description and data.

For ARCHITECTURAL TESTING, INC.

Mark A. Hess, Technician

MAH:nlb

Allen M. Reeves
1 APRIL 2002

ALLEN M. REEVES
CERTIFICATE NO. 19354
STATE OF FLORIDA
PROFESSIONAL ENGINEER

Architectural Testing

AAMA/NWWDA 101/I.S.2-97 TEST REPORT

Rendered to

MI HOME PRODUCTS, INC.
650 West Market Street
P.O. Box 370
Gratz, Pennsylvania 17030-0370

Report No: 01-41134.01
Test Date: 03/07/02
Report Date: 03/26/02
Expiration Date: 03/07/06

Project Summary: Architectural Testing, Inc. (ATI) was contracted by MI Home Products, Inc. to perform tests on Series/Model 650 Fin, aluminum single hung window at their facility located in Elizabethville, Pennsylvania. The samples tested successfully met the performance requirements for a H-R40 52 x 72 rating.

Test Specification: The test specimen was evaluated in accordance with AAMA/NWWDA 101/I.S.2-97, *Voluntary Specifications for Aluminum, Vinyl (PVC) and Wood Windows and Glass Doors.*

Test Specimen Description

Series/Model: 650 Fin

Type: Aluminum Single Hung Window

Overall Size: 4' 4-1/4" wide by 6' 0-3/8" high

Active Sash Size: 4' 1-3/4" wide by 3' 0-5/8" high

Daylight Opening Size: 3' 11-3/8" wide by 2' 9-1/2" high

Screen Size: 4' 0-1/4" wide by 2' 11-1/8" high

Finish: All aluminum was white.

Glazing Details: The active and fixed lites utilized 5/8" thick, sealed insulating glass constructed from two sheets of 1/8" thick, clear annealed glass and a metal reinforced butyl spacer system. The active sash was channel glazed utilizing a flexible vinyl wrap-around gasket. The fixed lite was interior glazed against double-sided adhesive foam tape and secured with PVC snap-in glazing beads.

130 Derry Court
York, PA 17402-9405
phone: 717.764.7700
fax: 717.764.4129
www.archtest.com

Allen M. Reeves
1 APRIL 2002

REEVES
LICENSE
NO. 19354
STATE OF
FLORIDA
PROFESSIONAL ENGINEER

Test Specimen Description: (Continued)

Weatherstripping:

Description	Quantity	Location
0.230" high by 0.270" backed polypile with center fin	1 Row	Fixed meeting rail
0.250" high by 0.187" backed polypile with center fin	2 Rows	Active sash stiles
1/2" x 1/2" dust plug	4 Pieces	Active sash, top and bottom of stiles
1/4" foam-filled vinyl bulb seal	1 Row	Active sash, bottom rail

Frame Construction: The frame was constructed of extruded aluminum with coped, butted, and sealed corners fastened with two #8 x 1" screws through the head and sill into each jamb screw boss. End caps were utilized on the ends of the fixed meeting rail and secured with two 1-1/4" screws per cap. Meeting rail was secured to the frame utilizing two 1-1/4" screws.

Sash Construction: The sash was constructed of extruded aluminum with coped, butted, and sealed corners fastened with two #8 x 1-1/2" screws through the rails into each jamb screw boss.

Screen Construction: The screen was constructed from roll-formed aluminum with keyed corners. The fiberglass mesh was secured with a flexible spline.

Hardware:

Description	Quantity	Location
Metal cam lock with keeper		Midspan, active meeting rail with keeper adjacent on fixed meeting rail
Plastic tilt latch	2	Active sash, meeting rail ends
Metal tilt pin	2	Active sash, bottom rail ends
Balance assembly	2	One in each jamb
Screen plunger	2	4" from rail ends on top rail

Allen N. Reeves
1 APRIL 2002

ALLEN N. REEVES
CERTIFICATE
NO. 19354
STATE OF
FLORIDA
PROFESSIONAL ENGINEER

Test Specimen Description: (Continued)

Drainage: Sloped sill

Reinforcement: No reinforcement was utilized.

Installation: The test specimen was installed into a 2 x 8 #2 Spruce-Pine-Fir wood test buck with #8 x 1-5/8" drywall screws every 8" on center around the nail fin. Polyurethane was used as a sealant under the nail fin and around the exterior perimeter.

Test Results:

The results are tabulated as follows:

Paragraph	Title of Test - Test Method	Results	Allowed
2.2.1.6.1	Operating Force	11 lbs	30 lbs max
	Air Infiltration (ASTM E 283-91) @ 1.57 psf (25 mph)	0.13 cfm/ft^2	0.3 cfm/ft^2 max

Note #1: The tested specimen meets the performance levels specified in AAMA/NWWDA 101/I.S. 2-97 for air infiltration.

	Water Resistance (ASTM E 547-00) (with and without screen) WTP = 2.86 psf	No leakage	No leakage
2.1.4.1	Uniform Load Deflection (ASTM E 330-97) (Measurements reported were taken on the meeting rail) (Loads were held for 33 seconds)		
	@ 25.9 psf (positive)	0.42"*	0.26" max.
	@ 34.7 psf (negative)	0.43"*	0.26" max.

**Exceeds L/175 for deflection, but passes all other test requirements.*

2.1.4.2	Uniform Load Structural (ASTM E 330-97) (Measurements reported were taken on the meeting rail) (Loads were held for 10 seconds)		
	@ 38.9 psf (positive)	0.02"	0.18" max.
	@ 52.1 psf (negative)	0.02"	0.18" max.

Allen N. Reeves
1 APRIL 2002

ALLEN N. REEVES
CERTIFICATE
NO. 13374
STATE OF
FLORIDA
PROFESSIONAL ENGINEER

Test Specimen Description: (Continued)

Paragraph	Title of Test - Test Method	Results	Allowed
2.2.1.6.2	Deglazing Test (ASTM E 987)		
	In operating direction at 70 lbs		
	Meeting rail	0.12"/25%	0.50"/100%
	Bottom rail	0.12"/25%	0.50"/100%
	In remaining direction at 50 lbs		
	Left stile	0.06"/12%	0.50"/100%
	Right stile	0.06"/12%	0.50"/100%
	Forced Entry Resistance (ASTM F 588-97)		
	Type: A Grade: 10		
	Lock Manipulation Test	No entry	No entry
	Tests A1 through A5	No entry	No entry
	Test A7	No entry	No entry
	Lock Manipulation Test	No entry	No entry
Optional Performance			
4.3	Water Resistance (ASTM E 547-00) (with and without screen) WTP = 6.00 psf	No leakage	No leakage
	Uniform Load Deflection (ASTM E 330-97) (Measurements reported were taken on the meeting rail) (Loads were held for 33 seconds)		
	@ 45.0 psf (positive)	0.47"*	0.26" max.
	@ 47.2 psf (negative)	0.46"*	0.26" max.

**Exceeds L/175 for deflection, but passes all other test requirements.*

	Uniform Load Structural (ASTM E 330-97) (Measurements reported were taken on the meeting rail) (Loads were held for 10 seconds)		
	@ 67.5 psf (positive)	0.05"	0.18" max.
	@ 70.8 psf (negative)	0.05"	0.18" max.

Allen N. Reeves
1 APRIL 2002

ALLEN N. REEVES
CERTIFICATE
No. 18334
STATE OF
FLORIDA
PROFESSIONAL ENGINEER

Detailed drawings, representative samples of the test specimen, and a copy of this report will be retained by ATI for a period of four years. The above results were secured by using the designated test methods and they indicate compliance with the performance requirements of the above referenced specification. This report does not constitute certification of this product, which may only be granted by the certification program administrator.

For ARCHITECTURAL TESTING, INC:

Mark A. Hess
Technician

Allen N. Reeves, P.E.
Director - Engineering Services
1 APRIL 2002

MAH:nlb
01-41134.01

ALLEN N. REEVES
CERTIFICATE
NO. 12004
STATE OF
FLORIDA
PROFESSIONAL ENGINEER

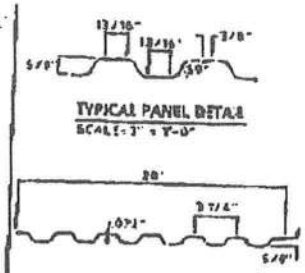

① TYPICAL OVERALL PANEL
SCALE: 1-1/2" = 1'-0"

ASTM A792 OR 50 ALUM ZINC ALLOY COATED STEEL.

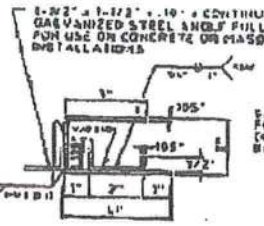

② WINDLOCK CHANNEL GUIDE
SCALE: 3" = 1'-0"

ALL COMPONENTS SHALL BE ASTM A526 STEEL W/ MIN Fy=33 KSI GALVANIZED PER ASTM A525 G-90

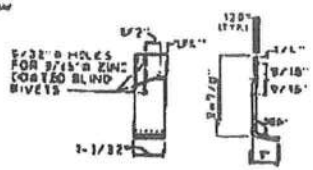

③ WINDLOCK
SCALE: 3" = 1'-0"

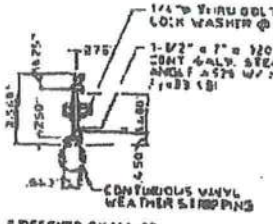

④ BOTTOM STIFFENER & ANGLE (TYPE A)
SCALE: 3" = 1'-0"

STIFFENER SHALL BE 6063-T5 AL. ALLOY

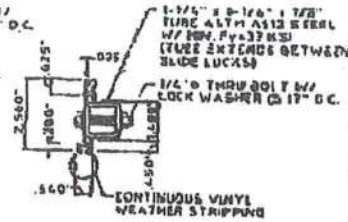

⑤ BOTTOM STIFFENER & TUBE (TYPE B)
SCALE: 3" = 1'-0"

STIFFENER SHALL BE 6063-T5 AL. ALLOY

ASTM A526 STEEL W/ MIN Fy=33 KSI GALVANIZED PER ASTM A525 G-90

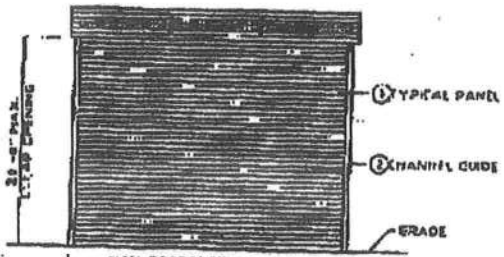

NOTE: MAX DESIGN LOAD = 45.0 P.S.F. FOR L = 12'-0"
MAX. DESIGN LOAD = 30.0 P.S.F. FOR L = 15'-0"
REFERENCE TABLE 1 ON SHEET 2 FOR SUPERIMPOSED LOADS & FASTENER MAXIMUM SPACING.

Ⓐ INTERIOR ELEVATION
N.T.S.

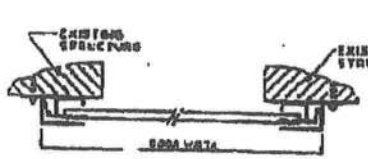

Ⓒ PLAN VIEW
SCALE: 1-1/2" = 1'-0"

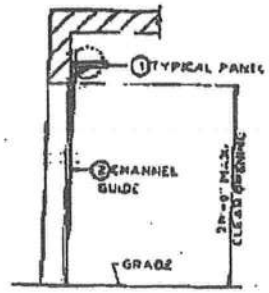

Ⓑ SIDE ELEVATION
N.T.S.

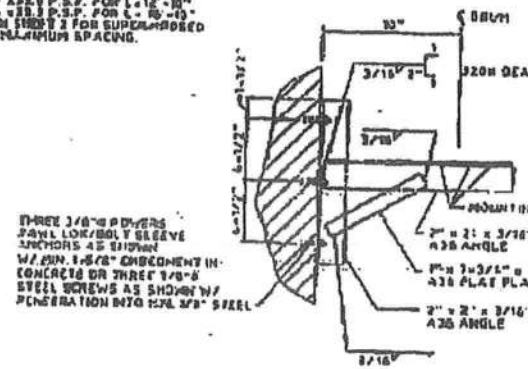

Ⓓ DOOR MOUNTING BRACKET DETAIL
SCALE: 1-1/2" = 1'-0"

GENERAL NOTES

1. THESE PRODUCT EVALUATION DOCUMENTS REPRESENT A DOOR ROLL-UP DOOR SERIES INSPECTED AND TESTED IN ACCORDANCE WITH THE FLORIDA BUILDING CODE 2001.
2. THIS ROLL-UP DOOR HAS BEEN SUCCESSFULLY TESTED IN ACCORDANCE WITH ASTM E330 TO SATISFY PROVIDE A POSITIVE OR NEGATIVE WIND LOAD AS NOTED IN THE DOOR SCHEDULE. A TEST LOAD OF 1.5 x DESIGN LOAD HAS BEEN USED.
3. NO INCREASE IN ALLOWABLE STRESS HAS BEEN USED IN THE DESIGN OF THIS PRODUCT.
4. DETERMINE THE POSITIVE AND NEGATIVE DESIGN LOADS TO USE WHEN REFERENCING THESE DOCUMENTS IN ACCORDANCE WITH THE GOVERNING CODE AND COMPUTING WIND VELOCITY. FOR WIND LOAD CALCULATIONS IN ACCORDANCE WITH ASCE 7-98, A DIRECTIONALITY FACTOR OF Kd = 0.85 MAY BE USED.
5. THESE PRODUCT EVALUATION DOCUMENTS ARE PREPARED BY THE PRODUCT ENGINEER AND ARE GENERIC. THEY DO NOT INCLUDE INFORMATION PREPARED FOR A SPECIFIC SITE.
6. THESE PRODUCT EVALUATION DOCUMENTS ARE NOT VALID FOR PERMIT WITHOUT ORIGINAL SIGNATURE, DATE & EMBOSSED SEAL ON EACH PAGE/COPY. THIS ORIGINAL SIGNATURE AND SEAL REQUIREMENT IS APPLICABLE WHETHER OR NOT A MASTER APPROVAL DOCUMENT IS ON FILE WITH A MUNICIPALITY OR OTHER GOVERNMENTAL AGENCY.
7. THESE PRODUCT EVALUATION DOCUMENTS ARE SUITABLE TO BE APPLIED BY THE CONTRACTOR PROVIDED THE CONTRACTOR DOES NOT DEVIATE FROM THE CONDITIONS OF USED HEREIN AND THE CONTRACTOR VERIFIES THE EXISTING STRUCTURE IS CAPABLE OF SUPPORTING THE LOADS.
8. ALL ALTERATIONS OR ADDITIONS TO THIS DOCUMENT ARE NOT PERMITTED.
9. WHERE THE CONTRACTOR OR THE BUILDING OFFICIAL REQUIRES DOCUMENTS FOR SITE SPECIFIC APPLICATION, THESE DOCUMENTS SHALL BE PREPARED BY A FLORIDA REGISTERED ENGINEER OR ARCHITECT FOR SAID APPLICATION.
10. WHEN THE SITE CONDITIONS DEVIATE FROM THESE PRODUCT EVALUATION DOCUMENTS, SITE SPECIFIC DOCUMENTS SHALL BE PREPARED BY A FLORIDA REGISTERED ENGINEER OR ARCHITECT. IF THE DEVIATION SITE SPECIFIC DOCUMENTS ARE PREPARED BY A DELEGATED FLORIDA REGISTERED ENGINEER OR ARCHITECT, SAID DOCUMENTS SHALL BEAR THE DATE, SIGNATURE, AND EMBOSSED SEAL OF THE DELEGATED ENGINEER OR ARCHITECT AND SHALL BE SUBMITTED TO THE PRODUCT ENGINEER FOR REVIEW.
11. DESIGN BASED ON CONSTRUCTION TESTING CORPORATION (C.T.C.) TEST REPORT No's. 95-032, AND 95-019.
12. SUPERIMPOSED LOADS ON THE JAMBS FROM THIS DOOR ARE DESIGNATED AS V_S AND V_T NORTH. CONTRACTORS SHALL HAVE BUILDING ENGINEER VERIFY (REQUIRE OF BUILDING STRUCTURE TO REDEST SUPERIMPOSED LOADS V_S, V_T AND BRACKET LOADS SHOWN.
13. ALL WELDING SHALL BE PERFORMED BY QUALIFIED WELDERS IN ACCORDANCE WITH AWS SPECIFICATIONS, LATEST EDITION. ALL WELDING ELECTRODES SHALL CONFORM TO AWS A5.1 GRADE E-70.
14. DOORS SHALL BE PROVIDED WITH SLIDE LOCK MECHANISM AT EACH END OF BOTTOM OF DRUM ENGAGING CHANNEL GUIDES IN THE LOCKED POSITION.

10/01/02 1450

ROLL - UP DOOR

FLORIDA BUILDING CODE

02-292

26 ga.

3100

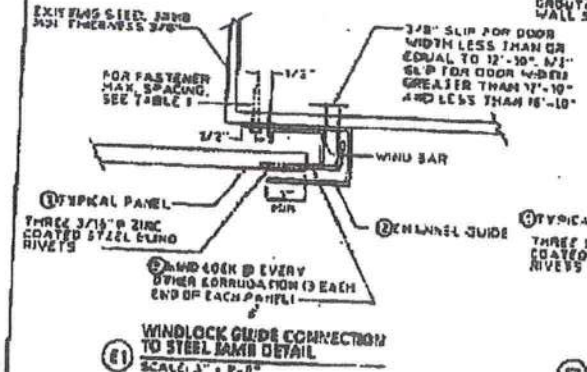

E1 WINDLOCK GUIDE CONNECTION TO STEEL JAMB DETAIL
SCALE: 3" = 1'-0"

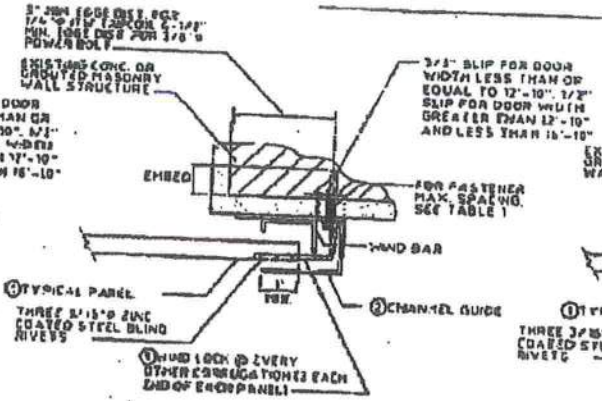

E2 WINDLOCK GUIDE CONNECTION TO CONCRETE OR GROUTED MASONRY DETAIL (INSIDE GUIDE)
SCALE: 3" = 1'-0"

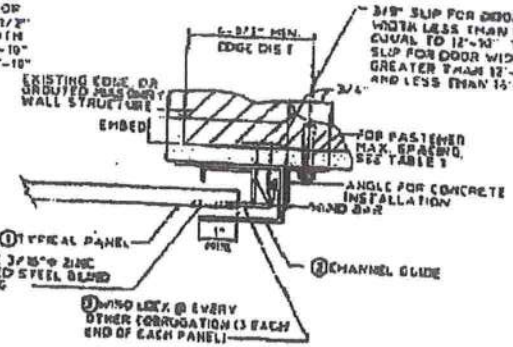

E3 WINDLOCK GUIDE CONNECTION TO CONCRETE OR GROUTED MASONRY DETAIL (OUTSIDE GUIDE)
SCALE: 3" = 1'-0"

DOOR SCHEDULE				TABLE 1						
				FASTENER MAXIMUM SPACING						
		SUPERIMPOSED LOADS		DETAIL E1	DETAIL E2		DETAIL E3		DETAIL E3	
MAX. DOOR WIDTH	MAX. DESIGN LOAD (P.S.F.)	V_x (P.L.F.)	V_y (P.L.F.)	3/8"Ø -12 x 1" HEX WASHER HEAD TYPE B THREAD FORMING ZINC PLATED STEEL SCREW PLUS A 3/8"Ø FLAT WASHER	3/8"Ø POWER BOLT ANCHOR WITH MINIMUM 2" EMBEDMENT		3/4"Ø ITW PAPCOR ANCHOR WITH MINIMUM 1-3/4" EMBEDMENT		3/8"Ø POWERS RAWL LOK/BOLT SLEEVE ANCHOR WITH MINIMUM 1-1/8" EMBEDMENT	
				STEEL STRUCTURE	CONCRETE STRUCTURE (MIN. 3000 P.S.I.)	GROUTED MASONRY STRUCTURE (SEE NOTE No. 2)	CONCRETE STRUCTURE (MIN. 3145 P.S.I.)	GROUTED MASONRY STRUCTURE (SEE NOTE No. 2)	CONCRETE STRUCTURE (MIN 3500 P.S.I.)	GROUTED MASONRY STRUCTURE (SEE NOTE No. 2)
≤ 12'-10"	≤ 35.0	819	223	12"	12"	6"	6"	N/A	7"	5"
	≥ 25.0	478	181	14"	14"	12"	7"	3"	11"	8"
> 12'-10"	≤ 20.3	1197	255	8"	13"	5"	4"	N/A	4"	4"
≤ 16'-10"	≥ 26.0	987	210	9"	14"	7"	4"	N/A	3"	5"

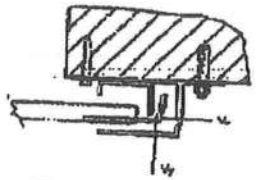

E SUPERIMPOSED LOAD DIAGRAM
SCALE: 3" = 1'-0"

TABLE 1 NOTES:

1. ENTER TABLE 1 WITH MAX. DOOR WIDTH & MAX. DESIGN LOAD. SUPERIMPOSED LOADS V_x & V_y ARE GIVEN FOR EACH DOOR WIDTH & DESIGN LOAD COMBINATION (SEE GENERAL NOTE 11 ON SHEET 1 FOR V_x & V_y).
2. DETERMINE FASTENER MAX. SPACING BASED ON TYPE OF DETAIL AND WALL STRUCTURE FOR THE SPECIFIC INSTALLATION.
3. EMBEDMENT LENGTH DOES NOT INCLUDE STUCCO FINISH.
4. FOR HOLLOW MASONRY, FILL ALL CELLS WITHIN 8" UP THE ANCHOR W/ 3000 PSI GROUT.
5. ANCHORS SHALL BE INSTALLED IN ACCORDANCE W/ MANUFACTURERS SPECIFICATIONS.

10/08/02 14:50

K3

ROLL - UP DOOR

V.A. REPORT

FLORIDA BUILDING CODE

02-292

Sheet 1 of 2

3100

CONSTRUCTION TESTING CORPORATION
13873 N.W. 19th Ave. Miami, Florida 33054
Phone: (305) 685-6657 Fax: (305) 685-6659

Report No: 95-029

23 August 1995

Test Date: 17 August 1995

TESTS ON ROLL DOWN DOORS

Client:

Door & Building Components, Inc.

4310 Industrial Access Road
Douglasville, Georgia 30134

General : Uniform Static Air Pressure Loading, per ASTM E-330

Testing witnessed by:

John W. Knezevich, P.E. Knezevich & Ass.
Don Mills, Product Engineer for D.B.C.I.
Bill Mathews, President J. B. Mathews
George Dotzler, CTC Test Engineer

Statement of Conformance : This is a general statement and does not supersede the specific product descriptions in this report. The specimens are in conformance with drawings provided by the manufacturer, labeled:

ROLL - UP DOOR

D.B.C.I.

Door & Building Components, Inc.
4310 Industrial Access Road
Douglasville, Georgia 30134

Date : 8 - 23 - 95 Drawing # 95 - 430

Description of Test Specimen: The specimen was a roll down door manufactured by Door & Building Components, Inc. . This door was installed covering a nominal opening 16'-0" wide by 16'-0" high. The door was constructed of painted galvanized steel sheet (mic'd @ 0.0240" w/ galvanized, w/o paint). The specimens channel guides were secured to the steel jamb (1/4" steel plate) of the test chamber with 9/16" hex head self threading 3/8" x 1" screws at 4" on center. These channel guides were as shown in detail 2 "Windlock Channel Guide" of the manufacturers supplied drawings. The left guide fastenings were secured through the 1-1/2" x 1-1/2" angle typically used for concrete installations. The right channel guide did not include this feature (the 1-1/2" x 1-1/2" angle) and the fastenings were secured through the center of the 1" protruding flange as shown detail 2. The door's bottom bar was as shown in detail 5 "Bottom Stiffener & Angle (Type B)" in the manufacturers drawings. Before testing this door was fully functional.

CONSTRUCTION TESTING CORPORATION
13873 N.W. 19th Ave. Miami, Florida 33054
Phone: (305) 685-6657 Fax: (305) 685-6659

Static Wind Loading / Manner of Testing:

Loads applied to the specimen (10 seconds durations in loading cycles greater than 40 seconds) were at levels specified by the client's Consulting Engineer. Polyethylene film (2 mil) and tape were used to seal air leakage during loads. The film and tape were used in a manner that did not influence the results. Deflection gauges were mounted at each jamb to record deflections along the center line of the door. The deflection readings are as follows:

		Left		Center		Right		Net @ Center Line		
Load	Load	Delta	Delta	Delta	Delta	Delta	Delta	Delta	Delta	Percent
PSF	In. H2O	.@ Load	.@ Rec'y	.@ Load	.@ Rec'y	.@ Load	.@ Rec'y	.@ Load	.@ Rec'y	Recovery
0.0	0.0	0.000	0.000	0.000	0.000	0.000	0.000	0.000	0.000	NA
15.6	3.0	0.500	0.063	11.438	0.188	0.500	0.016	10.938	0.148	98.6
20.8	4.0	0.531	0.063	12.063	0.125	0.516	0.156	11.539	0.016	99.9
26.0	5.0	0.531	0.031	13.000	0.063	0.563	0.031	12.453	0.031	99.7
31.2	6.0	0.563	0.031	13.750	0.125	0.625	0.063	13.156	0.078	99.4
38.5	7.4	0.625	0.125	14.938	0.313	0.750	0.063	14.250	0.219	98.5
45.5	8.8	0.688	0.156	16.250	0.750	0.875	0.063	15.469	0.641	95.9
52.5	10.1	NR	NR	NR	NR	NR	NR	NR	NR	NR

As loading was initiated it momentarily rose to approximately 55 PSF then imediately reduced to the desired level.

The correct load was held for approximately 4 seconds when the windlocks failed at the center of the right jamb.

SUMMARY

One roll down door specimen manufactured by DBCI was wind loaded in accordance with ASTM E-330 under the supervision of the clients consulting engineer. Loads were chosen to prove the adequacy of the product to sustain a design load of 25.5 PSF. In fact the sustained test load of 45.5 PSF proved the product to a design load of 30.3 PSF.

Respectfully submitted,

CONSTRUCTION TESTING CORPORATION.
(Dade County Certification # 95-0419.02)

Report by George Dotzler : _____

Test witnessed & report reviewed by John W. Knezevich, P.E. : _____

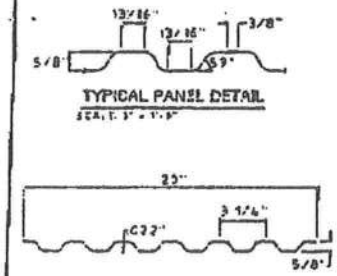

① TYPICAL OVERALL PANEL
SCALE: 1-1/2" = 1'-0"

ASTM A792 GR 80 ALUM. ZINC ALLOY COATED STEEL

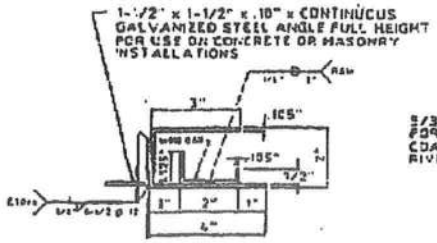

② WINDLOCK CHANNEL GUIDE
SCALE: 3" = 1'-0"

ALL COMPONENTS SHALL BE ASTM A525 STEEL W/ MIN. Fy=33 KSI GALVANIZED PER ASTM A525 G-90

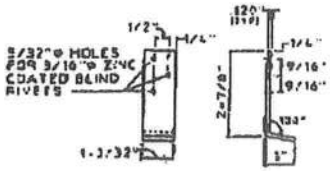

③ WINDLOCK
SCALE: 3" = 1'-0"

ASTM A526 STEEL W/ MIN Fy=33 KSI GALVANIZED PER ASTM A525 G-90

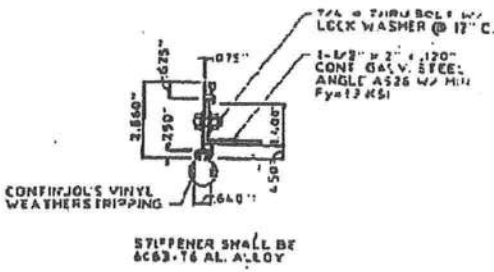

④ BOTTOM STIFFENER & ANGLE (TYPE A)
SCALE: 3" = 1'-0"

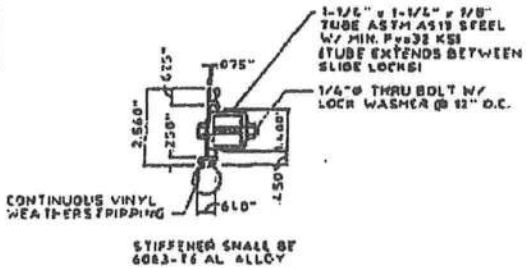

⑤ BOTTOM STIFFENER & TUBE (TYPE B)
SCALE: 3" = 1'-0"

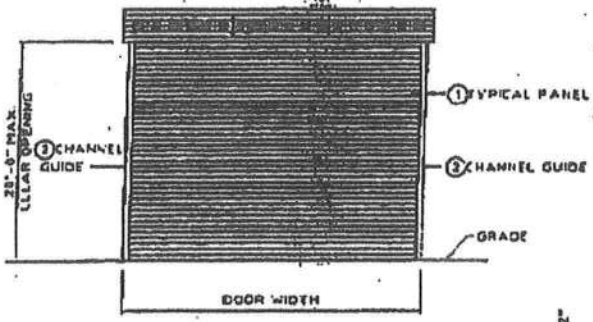

Ⓐ INTERIOR ELEVATION
N.T.S

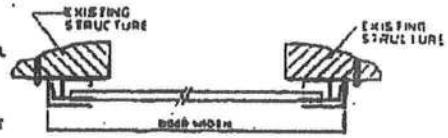

Ⓖ PLAN VIEW
SCALE: 1-1/2" = 1'-0"

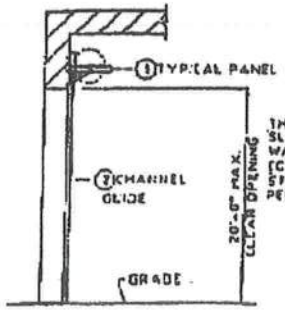

Ⓑ SIDE ELEVATION
N.T.S

THREE 3/8"Ø U.S. KINGPIN SLEEVE ANCHORS AS SHOWN W/ MIN. 1-1/2" EMBEDMENT IN CONCRETE OR THREE 3/8"Ø STEEL SCREWS AS SHOWN W/ PENETRATION INTO MIN. 1/8" STEEL

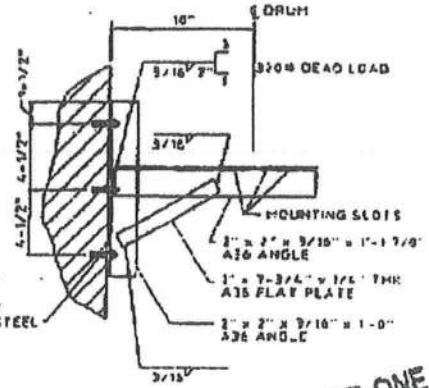

Ⓓ DOOR MOUNTING BRACKET DETAIL
SCALE: 1-1/2" = 1'-0"

GENERAL NOTES:

1. THIS ROLL-UP DOOR IS DESIGNED IN ACCORDANCE WITH THE STANDARD BUILDING CODE, 1991, 1994 & 1997 EDITION, INCLUDING THE 1995 PALM BEACH COUNTY AMENDMENTS.
2. THIS ROLL-UP DOOR HAS BEEN TESTED IN ACCORDANCE WITH THE STANDARD BUILDING CODE AND ASTM E-330 TO SAFELY RESIST A POSITIVE OR NEGATIVE WIND LOAD AS NOTED IN THE DOOR SCHEDULE. A TEST LOAD OF 1.5 x DESIGN LOAD HAS BEEN USED.
3. WIND LOADS FOR BUILDING OPENINGS SHALL BE DETERMINED BY A PROFESSIONAL ENGINEER USING APPROPRIATE WIND SPEED AND DESIGN CRITERIA. THIS DOOR MAY BE USED WHERE THE DESIGN LOAD MEETS OR EXCEEDS THE DESIGN LOAD FOR THE BUILDING OPENING.
4. SUPERIMPOSED LOADS ON THE JAMBS FROM THIS DOOR ARE DESIGNATED AS V_x AND V_y HEREIN. CONTRACTORS SHALL HAVE BUILDING ENGINEER VERIFY ADEQUACY OF BUILDING STRUCTURE TO RESIST SUPERIMPOSED LOADS V_x, V_y AND BRACKET LOADS SHOWN
5. ALL WELDING SHALL BE PERFORMED BY QUALIFIED WELDERS IN ACCORDANCE WITH A.W.S. SPECIFICATIONS, LATEST EDITION. ALL WELDING ELECTRODES SHALL CONFORM TO A.W.S. A5.1 GRADE E-70.
6. DOORS SHALL BE PROVIDED WITH SLIDE LOCK MECHANISMS AT EACH SIDE OF BOTTOM OF DOOR ENGAGING CHANNEL GUIDES IN THE LOCKED POSITION

KREZEVICH & ASSOCIATES, INC.
CONSULTING ENGINEERS • PROJECT MANAGERS

ROLL - UP DOOR

V.J. KREZEVICH
PROFESSIONAL ENGINEER
FLORIDA REG. NO.
P.E. NO.

JAN 1 6 2001

STANDARD BUILDING CODE

FOR ONE PERMIT ONLY
VALID ONLY WITH CONSULT. SEAL

98-176S

sheet 1 of 1

03/31/99 09:35

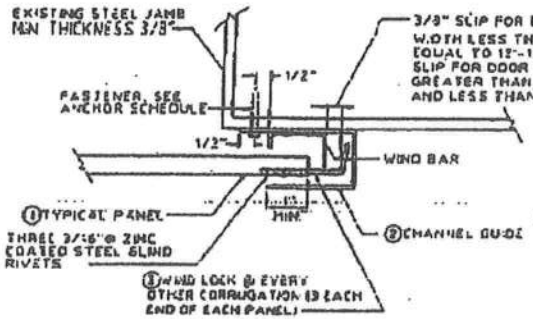

(E1) WINDLOCK GUIDE CONNECTION TO STEEL JAMB DETAIL
SCALE: 3" = 1'-0"

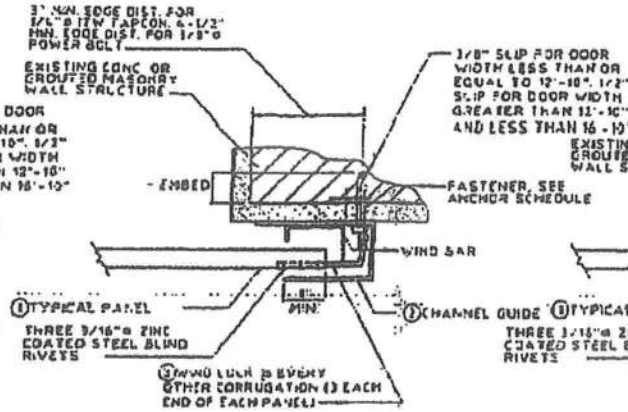

(E2) WINDLOCK GUIDE CONNECTION TO CONCRETE OR GROUTED MASONRY DETAIL (INSIDE GUIDE)
SCALE: 3" = 1'-0"

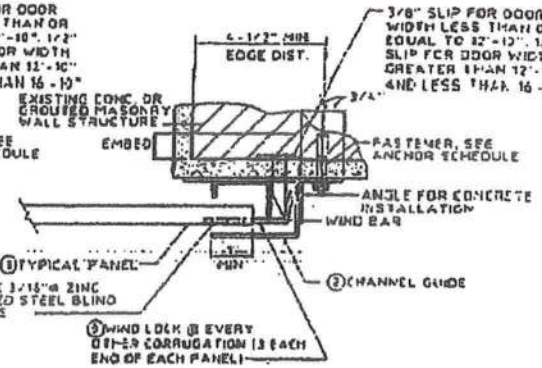

(E3) WINDLOCK GUIDE CONNECTION TO CONCRETE OR GROUTED MASONRY DETAIL (OUTSIDE GUIDE)
SCALE: 3" = 1'-0"

DOOR SCHEDULE				ANCHOR SCHEDULE - (FASTENER MAXIMUM SPACING)						
				DETAIL (E1)	DETAIL (E2)		DETAIL (E2)		DETAIL (E3)	
MAX. DOOR WIDTH	MAX. DESIGN PRESSURE (P.S.F.)	Vx (P.L.F.)	Vy (P.L.F.)	3/8"ø -12 x 2" HEX WASHER HEAD TYPE B THREAD FORMING ZINC PLATED STEEL SCREW PLUS A 3/8" ø FLAT WASHER	3/8"ø POWER BOLT ANCHOR WITH MINIMUM 2" EMBEDMENT		1/4"ø ITW TAPCON ANCHOR WITH MINIMUM 1-3/4" EMBEDMENT		3/8"ø U.S. KINGPIN SLEEVE ANCHOR WITH MINIMUM 1-7/8" EMBEDMENT	
				STEEL STRUCTURE	CONCRETE STRUCTURE	GROUTED MASONRY STRUCTURE (SEE NOTE No. 2)	CONCRETE STRUCTURE	GROUTED MASONRY STRUCTURE (SEE NOTE No. 2)	CONCRETE STRUCTURE	GROUTED MASONRY STRUCTURE (SEE NOTE No. 2)
≤ 12'-10"	± 35.0	810	223	12"	12"	12"	6"	4"	12"	7"
	± 26.0	478	165	16"	16"	16"	11"	4"	16"	15"
> 12'-10"	± 30.3	1069	255	8"	12"	9"	6"	N/A	8"	5"
≥ 16'-10"	± 26.0	952	248	8"	16"	12"	5"	3"	10"	6"

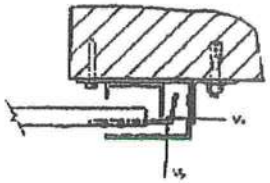

(S) SUPERIMPOSED LOAD DIAGRAM
SCALE: 3" = 1'-0"

ANCHOR NOTES:

1. EMBEDMENT LENGTH DOES NOT INCLUDE STUCCO FINISH
2. FOR HOLLOW MASONRY, FILL ALL CELLS WITHIN 8" OF THE ANCHOR W/ 2500 PSI GROUT.
3. ANCHORS SHALL BE INSTALLED IN ACCORDANCE W/ MANUFACTURERS SPECIFICATIONS.

FOR ONE PE
VALID ONLY WITH ORIGINAL SE

STANDARD BUILDING CODE

KNEZEVICH & ASSOCIATES, INC.
CONSULTING ENGINEERS • FINISHOUT TESTING

ROLL - UP DOOR

V.A. KNEZEVICH
PE
JAN 10 2001

98-176S

Sheet 2 of 2

08/31/99 09:58

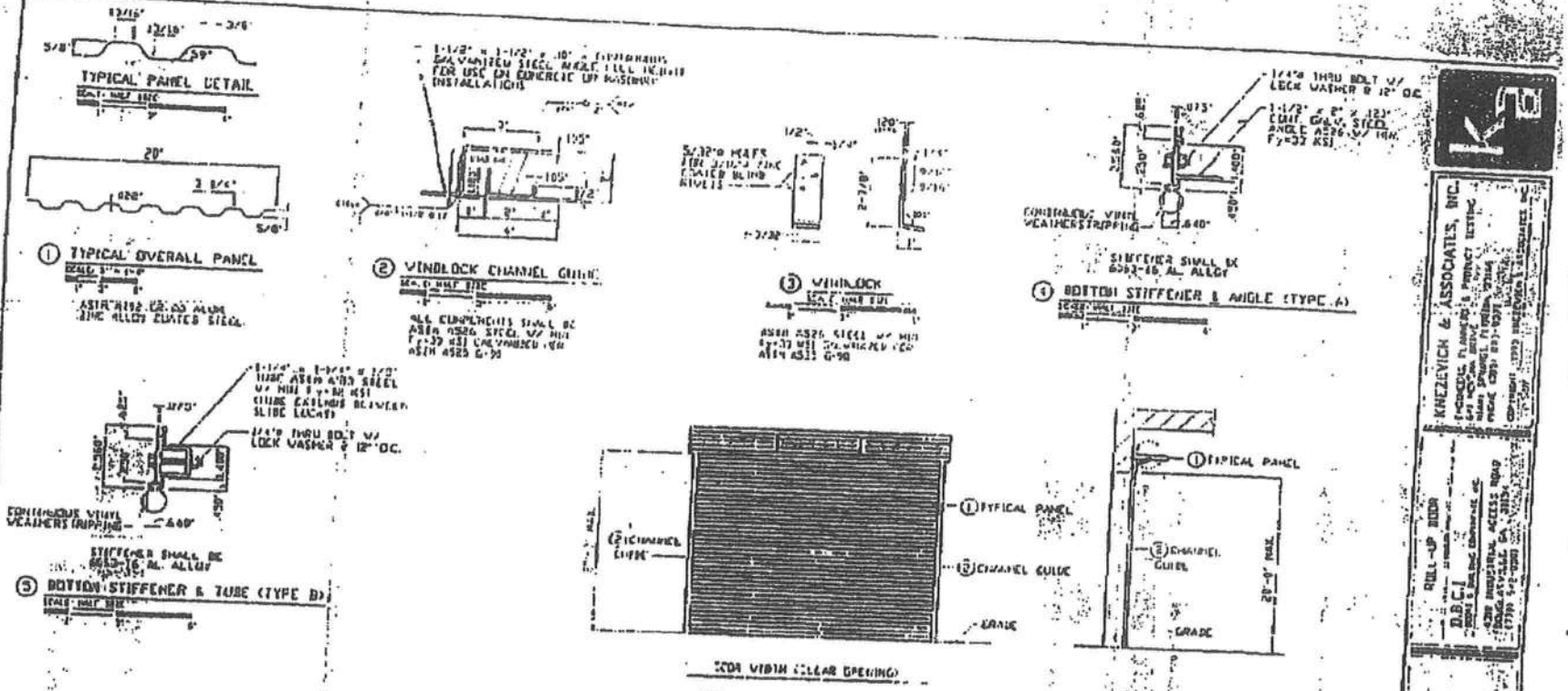

GENERAL NOTES

1. THIS DOOR IS DESIGNED IN ACCORDANCE WITH THE STANDARD BUILDING CODE 1991 EDITION INCLUDING 1992 PALM BEACH COUNTY AMENDMENTS.
2. THIS DOOR HAS BEEN TESTED IN ACCORDANCE WITH THE STANDARD BUILDING CODE SECTION 2308.4 AND ASTM E-330 TO SAFELY RESIST A POSITIVE AND NEGATIVE WIND LOAD AS NOTED IN THE DOOR SCHEDULE. A TEST LOAD OF 1.5 TIMES DESIGN LOAD HAS BEEN USED.
3. WIND CONSTRUCTION BUILDING OPENINGS SHALL BE DETERMINED BY A PROFESSIONAL ENGINEER USING APPROPRIATE WIND SPEED AND DESIGN CRITERIA. THIS FIRM MAY BE USED WHERE THE DESIGN LOAD MEETS OR EXCEEDS THE DESIGN LOAD FOR THE BUILDING OPENING.
4. SUPERIMPOSED LOADS ON THE JAMBS FROM THIS DOOR ARE DESIGNATED AS VA AND VB. CONTRACTORS SHALL HAVE BUILDING ENGINEER VERIFY ADEQUACY OF BUILDING STRUCTURE TO RESIST SUPERIMPOSED LOADS VA, VB AND PRESSURES SHOWN.
5. ALL WELDING SHALL BE PERFORMED BY QUALIFIED WELDERS IN ACCORDANCE WITH AWS SPECIFICATIONS. LATEST EDITION. ALL WELDING ELECTRODES SHALL CONFORM TO A.W.S. ASTM GRADE E-70.
6. DOORS SHALL BE PROVIDED WITH SLIDE LOCK MECHANISMS AT EACH SIDE OF BOTTOM OF DOOR ENGAGING CHANNEL GUIDES IN THE LOCKED POSITION.

KNEZEVICH & ASSOCIATES, INC.
CONSULTING ENGINEERS
ROLL-UP DOOR
D.B.C.I.
DOUGLAS V. KNEZEVICH
PROFESSIONAL ENGINEER
FL LICENSE NO.
55-4330

This Dwg shall not be used as a master
Exp 12-5-1995

13873 N.W. 19th Ave. Miami, Florida 33054
Phone: (305) 685-6657 Fax: (305) 685-6659

Static Wind Loading / Manner of Testing:

Loads applied to the specimen (10 seconds durations in loading cycles greater than 40 seconds) were at levels specified by the client's Consulting Engineer. Polyethylene film (2 mil) and tape were used to seal air leakage during loads. The film and tape were used in a manner that did not influence the results. Deflection gauges were mounted at each jamb to record deflections along the center line of the door. The deflection readings are as follows:

		Left		Center		Right		Net @ Center Line		
Load	Load	Delta	Delta	Delta	Delta	Delta	Delta	Delta	Delta	Percent
PSF	In. H2O	@ Load	@ Rec'y	@ Load	@ Rec'y	@ Load	@ Rec'y	@ Load	@ Rec'y	Recovery
0.0	0.0	0.000	0.000	0.000	0.000	0.000	0.000	0.000	0.000	NA
15.6	3.0	0.313	0.000	7.525	0.094	0.406	0.000	7.266	0.064	98.7
20.8	4.0	0.313	0.016	8.063	0.094	0.438	0.000	7.688	0.086	98.9
26.0	5.0	0.313	0.016	8.625	0.188	0.500	0.000	8.219	0.180	97.8
31.2	6.0	0.375	0.016	9.125	0.219	0.531	0.000	8.672	0.211	97.6
38.5	7.4	0.375	0.016	9.750	0.125	0.594	0.031	9.266	0.102	98.9
45.5	8.8	0.408	0.016	10.531	0.172	0.688	0.063	9.984	0.133	98.7
52.5	10.1	0.469	0.031	11.266	0.563	0.813	0.188	10.625	0.453	95.7
61.1	11.8	0.938	NR	14.875	NR	1.250	NR	13.781	NR	NR

Load was held for 9 seconds at this level when the wind locks failed at the left center jamb.

13875 N.W. 19th Ave. Miami, Florida 33054
Phone: (305) 685-6657 Fax: (305) 685-6659

Impact Manner of Testing: In accordance with Dade County Test Protocol PA 201-94 (rev 2) IMPACT TEST PROCEDURE.

This testing was performed as an experiment for the research and development of this product for Dade County Product Approval. One door assembly was tested, this was installed as previously described. It was impacted twice with a 9.0 lb. 2x4 of No. 2 **Southern Pine** in locations as indicated in the document "Answers to questions most frequently asked about the new impact test" (by Jaime Gascon of DCPC) and a third time in a location specified by the clients engineer.

Impact Test Results

Shot	Impact Location	Impact Coordinates Rt(in), Up(in)	Firing Pressure in Hg	Impact Velocity Ft / Sec	Results
1	Right Bottom Corner	140, 12	9.88	49.6	No Penetration
2	Panel center @ Midspan	72, 33.5	10.00	50.2	No Penetration
3	Panel seam @ Midspan	73, 42.5	10.00	49.5	No Penetration

SUMMARY

One roll down door specimen manufactured by DBCI was wind loaded in accordance with **ASTM E-330** under the supervision of the clients consulting engineer. Loads were chosen to prove the adequacy of the product to sustain a design load of 25.5 PSF. In fact the product sustained a test load of 52.5 PSF adequate to prove a design load of 35 PSF.

Following wind loading undamaged portions of the specimen were subjected to three impacts in accordance with **Dade County Test Protocol PA 201-94** (ver 2.0). None of these impacts resulted in the penetration of the specimen.

Respectfully submitted,

CONSTRUCTION TESTING CORPORATION.
(Dade County Certification # 95-0419.02)

Report by George Dotzler : _____ 8-23-95

Test witnessed & report reviewed by John W. Knezevich, P.E. : _____

Sun-Tek Manufacturing, Inc.
10303 General Drive
Orlando, Fl 32824
Ph 407-859-2117
Fax 407-859-6607

Sun-Tek Skylights

IMPACT RATED PRODUCTS

MODEL	LARGEST SIZE	SMALLEST SIZE	DADE APPROVAL #	DESIGN PRESSURE	TEST PRESSURE POSITIVE	TEST PRESSURE NEGATIVE	WIND SPEED MPH (calculated)
MD-CMA	2246	1414	00-0224.06	37 PSF +-	110 PSF	74 PSF	120.22
CMA-D	4689	3030	00-1024.03	60 PSF +-	180 PSF	120 PSF	256.2
CM TUBE(STTCM)	21"	10"	99-0823.03	65 PSF +-	195 PSF	130 PSF	275.9
HSF	4646	2222	01-0620.04	60 PSF +-	180 PSF	120 PSF	256.2
ISFG	4949	1430		60 PSF +-	120 PSF	120 PSF	153.09
ICMG	4949	1430		60 PSF +-	120 PSF	120 PSF	153.09

MODEL	LARGEST SIZE	SMALLEST SIZE	NCTL TEST REPORT	DESIGN PRESSURE	TEST PRESSURE POSITIVE	TEST PRESSURE NEGATIVE	WIND SPEED MPH
SF TUBE(STT)	21"	10"	210-2195-1,2,3	110	165	165	253

(TESTED TO AND PASSED DADE COUNTY PROTOCOL PA201, PA202, PA203)

AAMA TESTED TO SPEC 1600-00 and/or 1605.1-87 VOLUNTARY SPECIFICATION FOR SKYLIGHTS

MODEL	LARGEST SIZE	SMALLEST SIZE	NCTL TEST REPORT	DESIGN PRESSURE	TEST PRESSURE POSITIVE	TEST PRESSURE NEGATIVE	WIND SPEED MPH
CMG	4949	1430	210-2731-1	60	172	129	163.9
FGC	4949	1430	210-2677-1	60	172	129	163.9
SFA	4646	1414	210-2732-1	73	110	110	169
SF	4646	1414	210-2769-1	89	133.5	133.5	186
CM/CMA	4646	1414	210-2147-1	89	133.5	133.5	186

WIND LOAD CALUCLATIONS FOR SUN-TEK SKYLIGHTS AS DETERMINED BY PHYSICAL TESTING

Method of calculation:
Square Root of Tested Pounds Per Square Foot
Divided by .00258

Model	Size	PSF	Wind Load
SFA	4646	62	155.6
TP	4646	55	146.6
SF	4646	62	155.6
CM	4646	62	155.6
FGC	4646	117	213.8
	4949	100	197.6
CMG	4646	117	213.8
	4949	100	197.6
FHP	4646	100	197.6
	4949	90	187.5
TG	4949	160	242.1
VGC	4646	110	207.3
TUBE	21"	165	253.9

(24X48) & (24X24)

TEST RESULTS

AAMA 1600.86 Paragraph No.	Title of Test	Measured	Allowed
8.2	Air Infiltration - ASTM E283 1.57 psf (15 mph)	0.01 cfm/ft²	0.30 cfm/ft²
8.3	Water Resistance - ASTM E547 5.0 gph/ft² WTP= 12.00 psf	No Leakage	No Leakage

AAMA 1605.1-87 Paragraph No.	Title of Test & Method	Measured	Allowed
4.4.2	Uniform Load Structural		
	Positive load		
	111.0 psf (Deflection)		
	Location:		
	A	Dome inverted no permanent damage	
	B	Dome inverted no permanent damage	
	C	Dome inverted no permanent damage	
	D	Dome inverted no permanent damage	
	E	Dome inverted no permanent damage	
	111.0 psf (Permanent Set)		
	Location:		
	A	0.00"	0.217"
	B	0.00"	0.217"
	C	0.00"	0.217"
	D	0.02"	0.217"
	E	0.01"	0.217"
	Negative Load		
	111.0 psf (Deflection)		
	Location:		
	A		0.258"
	B		0.258"
	C		0.258"
	D		0.258"
	E		0.258"
	111.0 psf (Permanent Set)		
	Location:		
	A	0.02"	0.217"
	B	0.01"	0.217"
	C	0.01"	0.217"
	D	0.02"	0.217"
	E	0.01"	0.217"
	F	0.01"	0.217
	G	0.00"	0.217

1/16/03

Mr. Jimmy

NCTL NATIONAL CERTIFIED TESTING LABORATORIES
1484 GEMINI BOULEVARD • ORLANDO, FLORIDA 32837
PHONE (407) 240-1388 • FAX (407) 240-2882

STRUCTURAL PERFORMANCE TEST REPORT

Report No: NCTL-210-2732-1
Test Date: 11/12/01
Report Date: 11/12/01
Expiration Date: 11/12/05

Client: Sun-Tek Manufacturing, Inc.
10303 General Drive
Orlando, FL 32824

Test Specimen: Sun Tek Manufacturing's Model "SFA" Fixed Aluminum Polycarbonate Dome Skylight. (SKP-R +37, -74)

Test Specification: AAMA 1600-00 "Voluntary Specifications for Skylights." AAMA 1605.1-87, "Uniform Load Test Procedure for Plastic Glazed Skylights by Uniform Static Air Pressure Difference."

TEST SPECIMEN DESCRIPTION

General: The test specimen was a fixed aluminum skylight with polycarbonate double dome measuring 54-3/8" wide by 54-3/8" high overall. The skylight was sandwiched glazed using butyl glazing tape bedding with a silicone sealant between the inner polycarbonate dome, all compressed with an extruded aluminum retainer screwed to the exterior perimter using twelve (12) (#8 x 3/4" self-taping) screws. The main frame self-flashing with curb measured 3-1/4" high. The outer polycarbonate dome measured 0.080" thick and the inner polycarbonate flat liner sheet measured 0.060" thick. The main frame was of welded mitered-corner construction. The specimen was self-flashing mounted using twelve (12) 1-1/4" spiral ring shanked nails. (see fastener diagram) to a mock-up roof section employing a 46-1/2" x 46-1/2" opening. The roof section was built to 8:12 pitch slope.

Glazing: The skylight was sandwich glazed using Sun-Tek Skylight's STS 1000 Skylight sealant silicone bedding between the inner polycarbonate flat liner sheet and the outer polycarbonate dome. The outer polycarbonate dome measured 0.080" thick. The inner flat liner measured 0.060" thick.

Weatherseals: No weatherstrip employed.

Weeps: N/A.

Interior & Exterior Surface Finish: Mill-finish.

1/17/03

TEST COMPLETED 11/12/01

The test specimen model "SFS" with a double and triple dome meets the performance levels specified in AAMA 1600-00 specification (rating SKP-R+37,-74) Models "SFAF", "SFAW" and "SFAFW" with double and triple dome qualifies with rating of SKP-R+37,-74)

Detailed drawings were available for laboratory records and comparison to the test specimen at the time of this report. A copy of this report along with representative sections of the test specimen will be retained by NCTL for a period of four (4) years. The results obtained apply only to the specimen tested. No conclusions of any kind regarding the adequacy or inadequacy of the polycarbonate in the test specimen may be drawn from this test. This report does not constitute certification of the product which may only be granted by a certification program validator.

NATIONAL CERTIFIED TESTING LABORATORIES

DANIEL D. CONYERS
Laboratory Manager

Barry O Bale
1/7/02

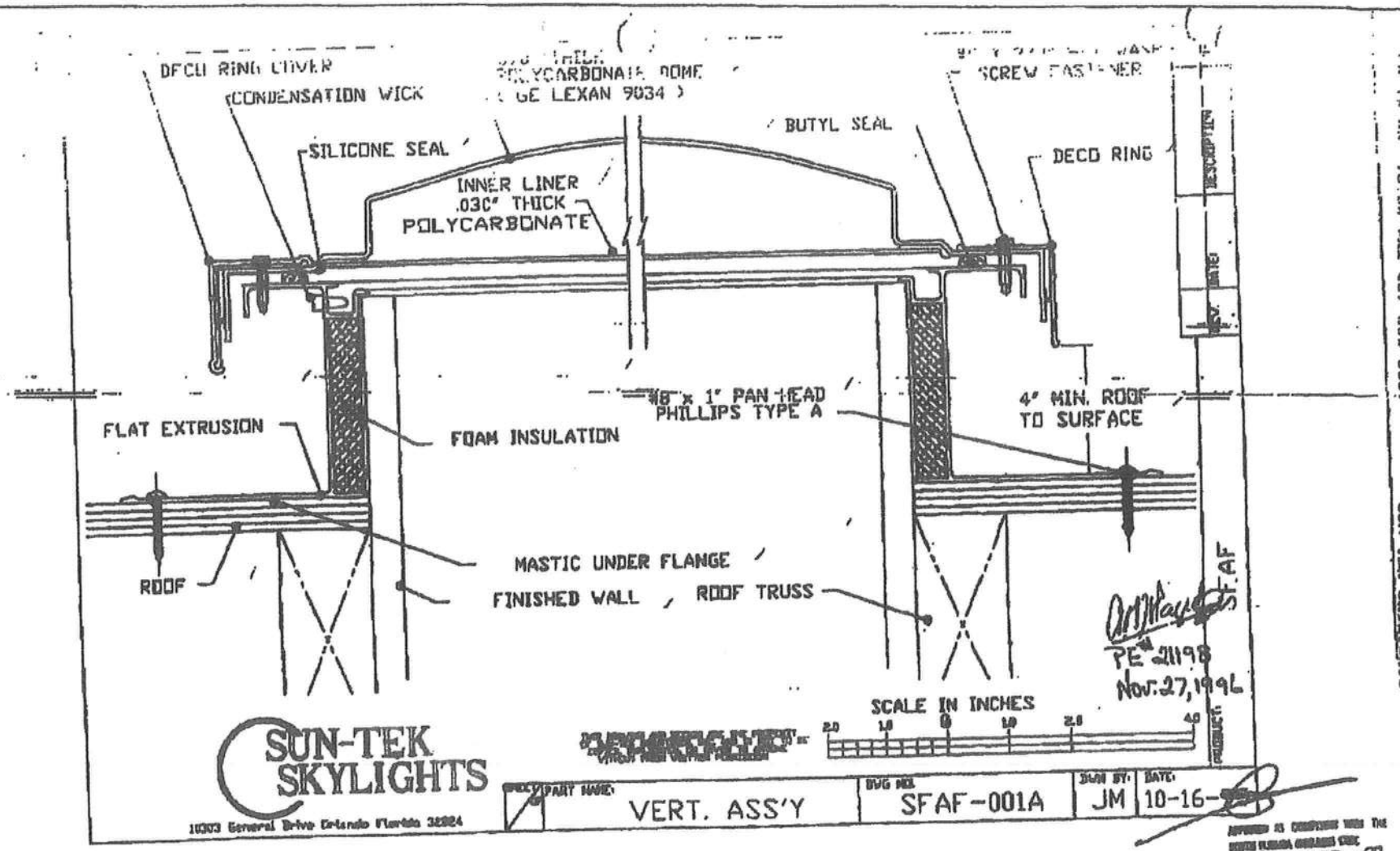
DECO RING COVER
CONDENSATION WICK
POLYCARBONATE DOME
(GE LEXAN 9034)
SCREW FASTENER
BUTYL SEAL
SILICONE SEAL
DECO RING
INNER LINER
.030" THICK
POLYCARBONATE
#8 x 1" PAN HEAD
PHILLIPS TYPE A
4" MIN. ROOF
TO SURFACE
FLAT EXTRUSION
FOAM INSULATION
MASTIC UNDER FLANGE
ROOF
FINISHED WALL
ROOF TRUSS
SCALE IN INCHES
2.0
1.0
0
1.0
2.0
4.0
SUN-TEK
SKYLIGHTS
10003 General Drive Orlando Florida 32824
PART NAME:
VERT. ASS'Y
DWG NO:
SFAF-001A
DWN BY:
JM
DATE:
10-16-
SFAF
PE 21198
Nov. 27, 1996

FASTENER LOCATIONS

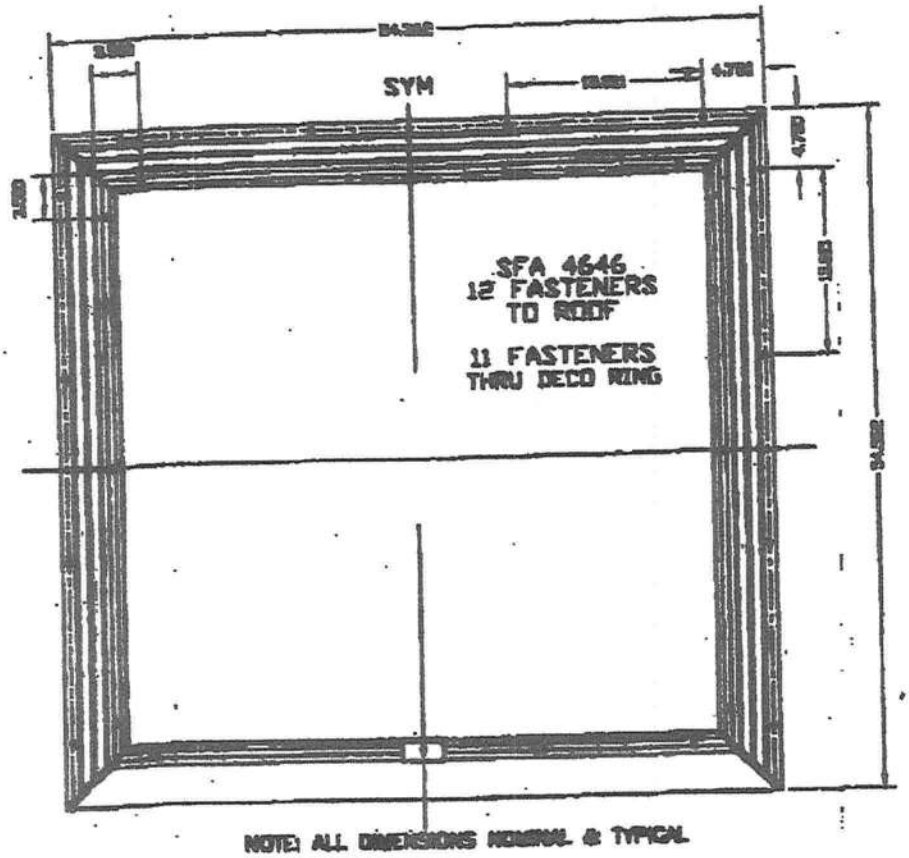

The test specimen was mounted to the test buck using ( ) ( ) screws located at location shown

NATIONAL CERTIFIED TESTING LABORATORIES

JOB NO.: NCTL-210-8732-1

COMPANY: Sun-Tek

TEST DATE: 11-17-01

1/17/02

ASTM HERITAGE 30 AR®

PRODUCT DATA

LAMINATED ASPHALT SHINGLES

Manufactured in Tuscaloosa, AL.

ASTM HERITAGE 30 AR® shingles feature a double-layer fiberglass mat construction with a random-cut sawtooth design. The two layers of mat are coated with asphalt and then laminated together and surfaced with mineral granules that will help protect against discoloration caused by algae. A self-sealing strip of asphalt helps provide added wind resistance.

USES

For application to roof decks with inclines of not less than 2 inches per foot. For slopes between 2 inches and 4 inches per foot, refer to wrapper instructions.

ADVANTAGES

- 30 year limited warranty, 5 year FULL START, limited transferability, winds up to 70 MPH
- Affordable upgrade from 3-tab shingles
- Superior fire resistance compared to organic shingles
- Rustic beauty of wood shakes
- Shadowtone feature adds depth and dimensional appearance
- Algae resistant granules to protect against discoloration in areas where extreme humidity is a problem
- 10 year limited warranty against discoloration caused by certain algae growth

CERTIFICATIONS

UL Class A Fire Rating
UL Wind Resistant

Fed. Spec.: Exceeds SS-S-001534, Class A, Type I

ASTM D 3018, Type I
ASTM E 108, Class A
ASTM D 3161, Type I (modified to 110 mph)
ASTM D 3462

COLORS

Classic Heritage Colors:

- Weathered Wood
- Rustic Cedar
- Rustic Hickory
- Driftwood
- Oxford Grey
- Shadow Grey
- Desert Sand
- Rustic Black
- Olde English Pewter
- Glacier White
- Rustic Evergreen

PRODUCT DATA*

Shingle size	12" X 37"
Exposure	5"
Shingles per square	78
Bundles per square	3

*All values stated as nominal

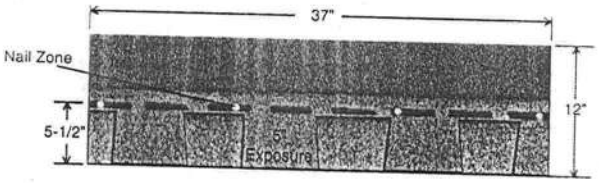

CAUTION: The National Institute for Occupational Safety and Health (NIOSH) has concluded that fumes of heated asphalt are a potential occupational carcinogen. Do not heat or burn this product.

TAMKO®
ROOFING PRODUCTS

Visit our Web Site at www.tamko.com

01/2002

Central District	220 West 4th St., Joplin, MO	64801	800-641-4691
Northeast District	4500 Tamko Dr., Frederick, MD	21701	800-368-2055
Southeast District	2300 35th St., Tuscaloosa, AL	35401	800-228-2656
Southwest District	7910 S. Central Exp., Dallas, TX	75216	800-443-1834
Western District	5300 East 43rd Ave., Denver, CO	80216	800-530-8868

Alpine Engineered Products, Inc.

1950 Marley Drive Haines City, FL 33844
Florida Engineering Certificate of Authorization Number: 567
Florida Certificate of Product Approval # FL1999
 Document ID:1SLV215-Z0704162250

Truss Fabricator: W.B. Howland
Job Identification: 2220-/EDGLEY// STEPHENSON/HANGE /EDGELY CONSTRUCTION -- , **
Truss Count: 31
Model Code: Florida Building Code 2001
Truss Criteria: ANSI/TPI-1995;ANSI/TPI-1995(STD)
Engineering Software: Alpine Software,Version 7.11.0116.20.
Structural Engineer of Record:
Address:
Minimum Design Loads: Roof - 40.0 PSF @ 1.25 Duration
Floor - N/A
Wind - 110 MPH ASCE 7-98 -Closed

Seal Date: 04/04/2005

-Truss Design Engineer-
James F. Collins Jr.
Florida License Number: 52212
1950 Marley Drive
Haines City, FL 33844

Notes:

1. Determination as to the suitability of these truss components for the structure is the responsibility of the building designer/engineer of record, as defined in ANSI/TPI 1-1995 Section 2.2
2. The drawing date shown on this index sheet must match the date shown on the individual truss component drawing.
3. As shown on attached drawings; the drawing number is preceded by: HCUSR215

Details: BRCLBSUB-CNBRGBLK-A11030EC-GBLLETIN

#	Ref Description	Drawing#	Date
1	90435--A-1	05094030	04/04/05
2	90436--A-2	05094020	04/04/05
3	90437--A-3	05094021	04/04/05
4	90438--A-4	05094022	04/04/05
5	90439--A-5	05094023	04/04/05
6	90440--A-6	05094024	04/04/05
7	90441--A-7	05094025	04/04/05
8	90442--A-8	05094026	04/04/05
9	90443--A-9	05094031	04/04/05
10	90444--A-10	05094027	04/04/05
11	90445--A-11	05094028	04/04/05
12	90446--A-12	05094032	04/04/05
13	90447--A-13	05094033	04/04/05
14	90448--A-14	05094034	04/04/05
15	90449--A-15	05094035	04/04/05
16	90450--A-16	05094036	04/04/05
17	90451--A-17	05094037	04/04/05
18	90452--A-18	05094038	04/04/05
19	90453--A-19	05094039	04/04/05
20	90454--AGDR-1	05094040	04/04/05
21	90455--AGDR-2	05094041	04/04/05
22	90456--AGDR-3	05094049	04/04/05
23	90457--GE1	05094042	04/04/05
24	90458--GE2	05094043	04/04/05
25	90459--GE3	05094044	04/04/05
26	90460--GEGDR1	05094045	04/04/05
27	90461--GEGDR2	05094050	04/04/05
28	90462--GEGDR3	05094046	04/04/05
29	90463--H2A	05094047	04/04/05
30	90464--M1	05094029	04/04/05
31	90465--MGDR1	05094048	04/04/05

Top chord 2x4 SP #2 N
Bot chord 2x4 SP #2 Dense
Webs 2x4 SP #2 N

110 mph wind, 30.00 ft mean hgt, ASCE 7-98, CLOSED bldg, not located within 4.50 ft from roof edge, CAT II, EXP B, wind TC DL=5.0 psf, wind BC DL=5.0 psf.

Deflection meets L/240 live and L/180 total load.

Plates sized for a minimum of 3.00 sq.in./piece.

The overall height of this truss excluding overhang is 4-4-3.

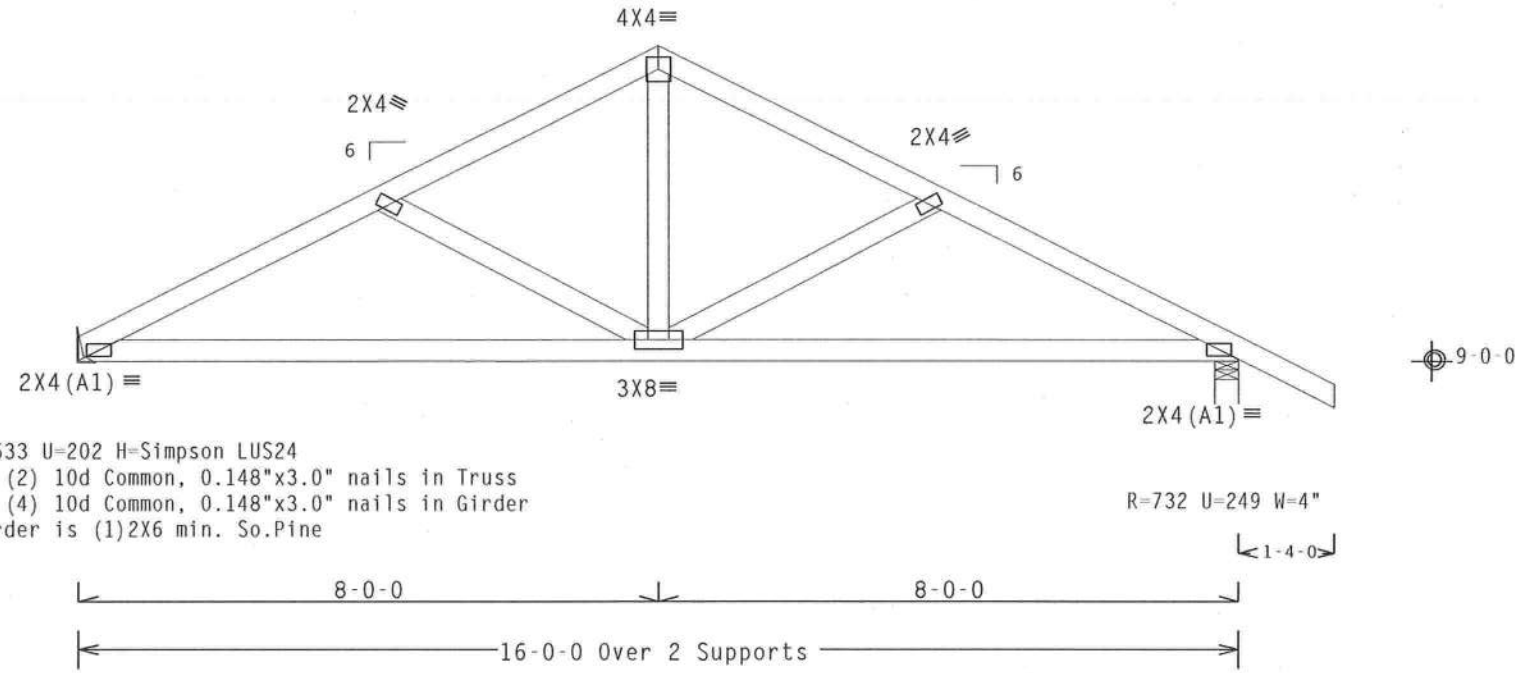

PLT TYP. Wave TPI\R | Design Crit: TPI-1995(STD) | 7.1 [illegible] 20 | FL/-/5/-/-/R/- | Scale =.375"/Ft.

ALPINE
Alpine Engineered Products, Inc.
1950 Marley Drive
Haines City, FL 33844
FL Certificate of Authorization # 567

WARNING TRUSSES REQUIRE EXTREME CARE IN FABRICATION, HANDLING, SHIPPING, INSTALLING AND BRACING. REFER TO BCSI 1-03 (BUILDING COMPONENT SAFETY INFORMATION), PUBLISHED BY TPI (TRUSS PLATE INSTITUTE, 583 D'ONOFRIO DR., SUITE 200, MADISON, WI 53719) AND WTCA (WOOD TRUSS COUNCIL OF AMERICA, 6300 ENTERPRISE LN., MADISON, WI 53719) FOR SAFETY PRACTICES PRIOR TO PERFORMING THESE FUNCTIONS. UNLESS OTHERWISE INDICATED, TOP CHORD SHALL HAVE PROPERLY ATTACHED STRUCTURAL PANELS AND BOTTOM CHORD SHALL HAVE A PROPERLY ATTACHED RIGID CEILING.

IMPORTANT FURNISH A COPY OF THIS DESIGN TO THE INSTALLATION CONTRACTOR. ALPINE ENGINEERED PRODUCTS, INC. SHALL NOT BE RESPONSIBLE FOR ANY DEVIATION FROM THIS DESIGN; ANY FAILURE TO BUILD THE TRUSS IN CONFORMANCE WITH TPI; OR FABRICATING, HANDLING, SHIPPING, INSTALLING & BRACING OF TRUSSES. DESIGN CONFORMS WITH APPLICABLE PROVISIONS OF NDS (NATIONAL DESIGN SPEC. BY AF&PA) AND TPI. ALPINE CONNECTOR PLATES ARE MADE OF 20/18/16GA (W,H/S/K) ASTM A653 GRADE 40/60 (W, K/H,S) GALV. STEEL. APPLY PLATES TO EACH FACE OF TRUSS AND, UNLESS OTHERWISE LOCATED ON THIS DESIGN, POSITION PER DRAWINGS 160A-2. ANY INSPECTION OF PLATES FOLLOWED BY (1) SHALL BE PER ANNEX A3 OF TPI1-2002 SEC.3. A SEAL ON THIS DRAWING INDICATES ACCEPTANCE OF PROFESSIONAL ENGINEERING RESPONSIBILITY SOLELY FOR THE TRUSS COMPONENT DESIGN SHOWN. THE SUITABILITY AND USE OF THIS COMPONENT FOR ANY BUILDING IS THE RESPONSIBILITY OF THE BUILDING DESIGNER PER ANSI/TPI 1 SEC. 2.

JAMES F. COLLINS JR. CERTIFICATE No. 0052212 STATE OF FLORIDA PROFESSIONAL ENGINEER

Apr 04 '05

TC LL	20.0 PSF	REF R215-- 90435
TC DL	10.0 PSF	DATE 04/04/05
BC DL	10.0 PSF	DRW HCUSR215 05094030
BC LL	0.0 PSF	HC-ENG EC/AP
TOT.LD.	40.0 PSF	SEQN- 130851
DUR.FAC.	1.25	FROM CDM
SPACING	24.0"	JREF- 1SLV215_Z07

Top chord 2x4 SP #2 N
Bot chord 2x4 SP #2 Dense
Webs 2x4 SP #2 N

Deflection meets L/240 live and L/180 total load.

The overall height of this truss excluding overhang is 4-4-3.

110 mph wind, 30.00 ft mean hgt, ASCE 7-98, CLOSED bldg, Located anywhere in roof, CAT II, EXP B, wind TC DL=5.0 psf, wind BC DL=5.0 psf.

Plates sized for a minimum of 3.00 sq.in./piece.

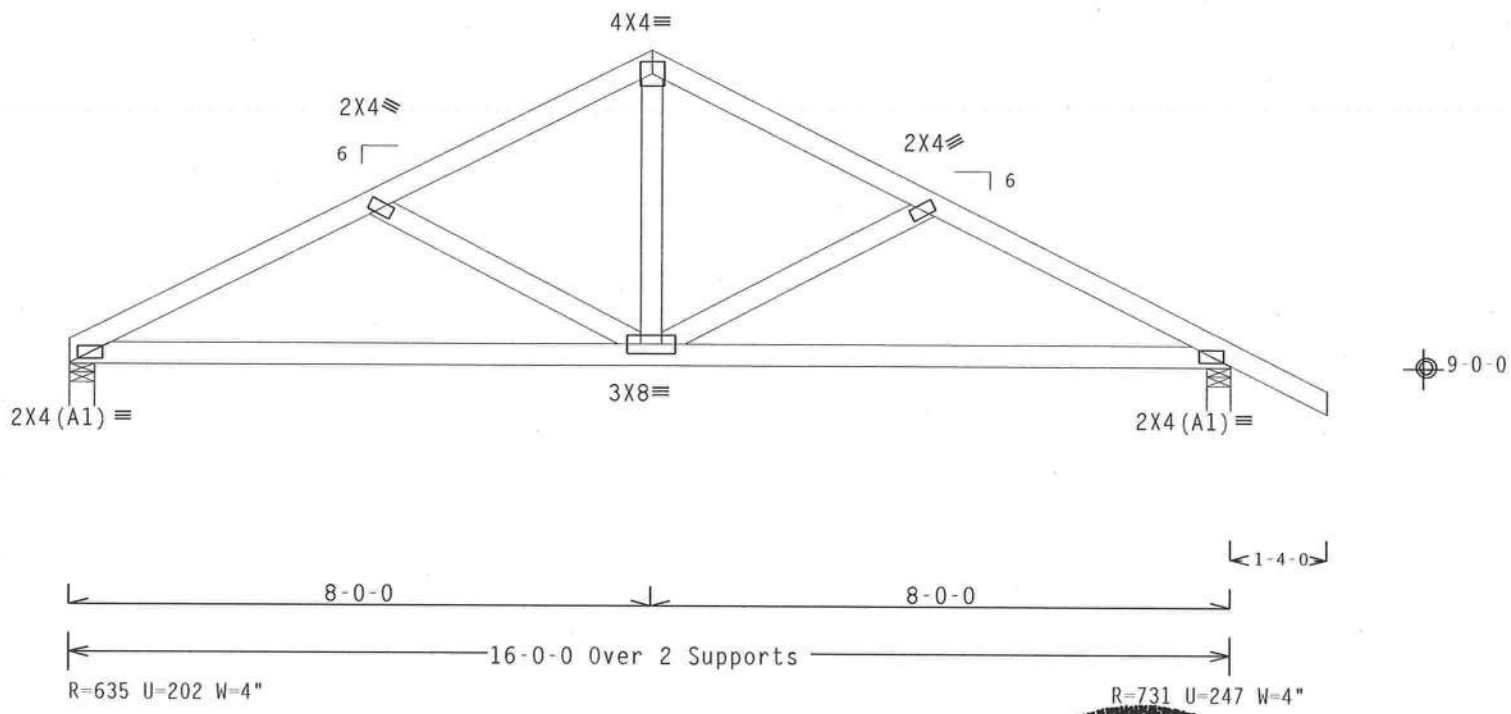

PLT TYP. Wave TPI\R Design Crit: TPI-1995(STD) 7.1 11-20 FL/-/5/-/-/R/- Scale =.375"/Ft.

ALPINE

Alpine Engineered Products, Inc.
1950 Marley Drive
Haines City, FL 33844
FL Certificate of Authorization # 567

WARNING TRUSSES REQUIRE EXTREME CARE IN FABRICATION, HANDLING, SHIPPING, INSTALLING AND BRACING. REFER TO BCSI 1-03 (BUILDING COMPONENT SAFETY INFORMATION), PUBLISHED BY TPI (TRUSS PLATE INSTITUTE, 583 D'ONOFRIO DR., SUITE 200, MADISON, WI 53719) AND WTCA (WOOD TRUSS COUNCIL OF AMERICA, 6300 ENTERPRISE LN, MADISON, WI 53719) FOR SAFETY PRACTICES PRIOR TO PERFORMING THESE FUNCTIONS. UNLESS OTHERWISE INDICATED, TOP CHORD SHALL HAVE PROPERLY ATTACHED STRUCTURAL PANELS AND BOTTOM CHORD SHALL HAVE A PROPERLY ATTACHED RIGID CEILING.

IMPORTANT FURNISH A COPY OF THIS DESIGN TO THE INSTALLATION CONTRACTOR. ALPINE ENGINEERED PRODUCTS, INC. SHALL NOT BE RESPONSIBLE FOR ANY DEVIATION FROM THIS DESIGN; ANY FAILURE TO BUILD THE TRUSS IN CONFORMANCE WITH TPI; OR FABRICATING, HANDLING, SHIPPING, INSTALLING & BRACING OF TRUSSES. DESIGN CONFORMS WITH APPLICABLE PROVISIONS OF NDS (NATIONAL DESIGN SPEC. BY AF&PA) AND TPI. ALPINE CONNECTOR PLATES ARE MADE OF 20/18/16GA (W,H/S/K) ASTM A653 GRADE 40/60 (W, K/H,S) GALV. STEEL. APPLY PLATES TO EACH FACE OF TRUSS AND, UNLESS OTHERWISE LOCATED ON THIS DESIGN, POSITION PER DRAWINGS 160A-Z. ANY INSPECTION OF PLATES FOLLOWED BY (I) SHALL BE PER ANNEX A3 OF TPI1-2002 SEC.3. A SEAL ON THIS DRAWING INDICATES ACCEPTANCE OF PROFESSIONAL ENGINEERING RESPONSIBILITY SOLELY FOR THE TRUSS COMPONENT DESIGN SHOWN. THE SUITABILITY AND USE OF THIS COMPONENT FOR ANY BUILDING IS THE RESPONSIBILITY OF THE BUILDING DESIGNER PER ANSI/TPI 1 SEC. 2.

JAMES F. COLLINS, JR. CERTIFICATE No. 0052212 STATE OF FLORIDA PROFESSIONAL ENGINEER

Apr 04 '05

TC LL	20.0 PSF	REF R215-- 90436
TC DL	10.0 PSF	DATE 04/04/05
BC DL	10.0 PSF	DRW HCUSR215 05094020
BC LL	0.0 PSF	HC-ENG EC/AP *
TOT.LD.	40.0 PSF	SEQN- 130857
DUR.FAC.	1.25	FROM CDM
SPACING	24.0"	JREF- 1SLV215_Z07

Top chord 2x4 SP #2 N
Bot chord 2x4 SP #2 N
Webs 2x4 SP #2 N

(A) Continuous lateral bracing equally spaced on member.

Deflection meets L/240 live and L/180 total load.

Plates sized for a minimum of 3.00 sq.in./piece.

The overall height of this truss excluding overhang is 10-0-0.

110 mph wind, 30.00 ft mean hgt, ASCE 7-98, CLOSED bldg, Located anywhere in roof, CAT II, EXP B, wind TC DL=5.0 psf, wind BC DL=5.0 psf.

In lieu of structural panels use purlins to brace all flat TC @ 24" OC.

WARNING: Furnish a copy of this DWG to the installation contractor. Special care must be taken during handling, shipping and installation of trusses. See "WARNING" note below.

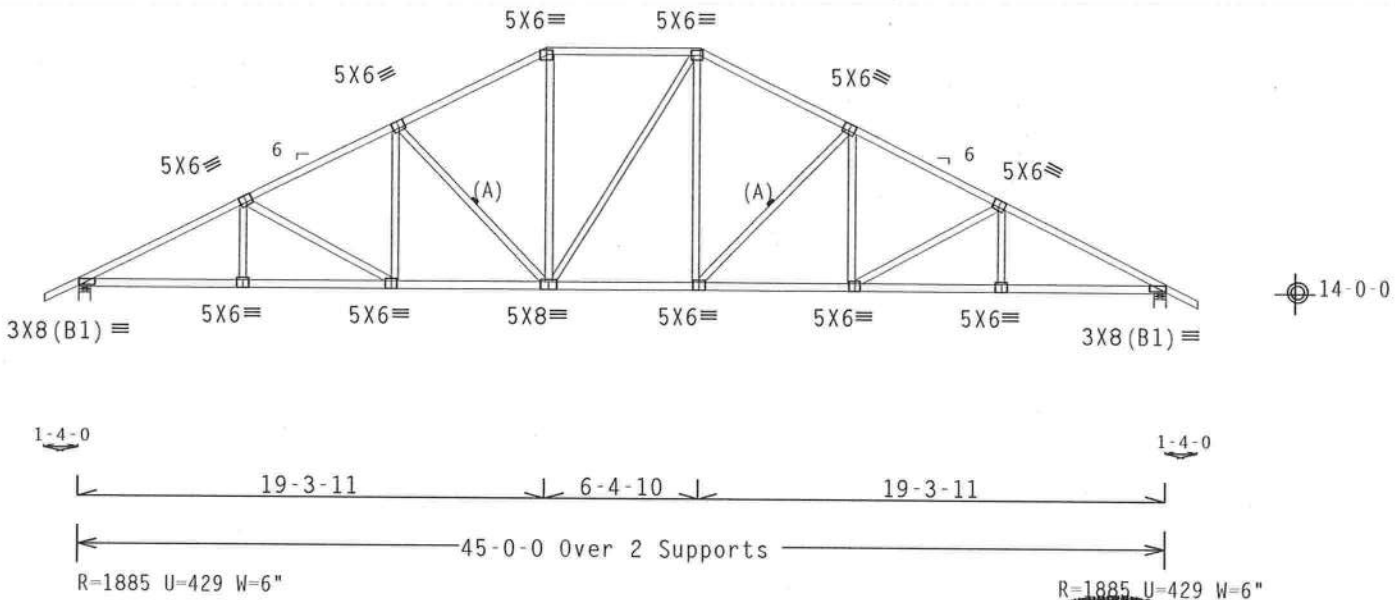

PLT TYP. Wave TPI\R Design Crit: TPI-1995(STD) 7.1 ... 20 ... 8 FL/-/5/-/-/R/- Scale =.125"/Ft.

ALPINE

Alpine Engineered Products, Inc.
1950 Marley Drive
Haines City, FL 33844
FL Certificate of Authorization # 567

WARNING TRUSSES REQUIRE EXTREME CARE IN FABRICATION, HANDLING, SHIPPING, INSTALLING AND BRACING. REFER TO BCSI 1-03 (BUILDING COMPONENT SAFETY INFORMATION), PUBLISHED BY TPI (TRUSS PLATE INSTITUTE, 583 D'ONOFRIO DR., SUITE 200, MADISON, WI 53719) AND WTCA (WOOD TRUSS COUNCIL OF AMERICA, 6300 ENTERPRISE LN MADISON, WI 53719) FOR SAFETY PRACTICES PRIOR TO PERFORMING THESE FUNCTIONS. UNLESS OTHERWISE INDICATED TOP CHORD SHALL HAVE PROPERLY ATTACHED STRUCTURAL PANELS AND BOTTOM CHORD SHALL HAVE A PROPERLY ATTACHED RIGID CEILING.

IMPORTANT FURNISH A COPY OF THIS DESIGN TO THE INSTALLATION CONTRACTOR. ALPINE ENGINEERED PRODUCTS, INC. SHALL NOT BE RESPONSIBLE FOR ANY DEVIATION FROM THIS DESIGN; ANY FAILURE TO BUILD THE TRUSS IN CONFORMANCE WITH TPI; OR FABRICATING, HANDLING, SHIPPING, INSTALLING & BRACING OF TRUSSES. DESIGN CONFORMS WITH APPLICABLE PROVISIONS OF NDS (NATIONAL DESIGN SPEC, BY AF&PA) AND TPI. ALPINE CONNECTOR PLATES ARE MADE OF 20/18/16GA (W,H/S/K) ASTM A653 GRADE 40/60 (W, K/H,S) GALV. STEEL. APPLY PLATES TO EACH FACE OF TRUSS AND, UNLESS OTHERWISE LOCATED ON THIS DESIGN, POSITION PER DRAWINGS 160A-Z. ANY INSPECTION OF PLATES FOLLOWED BY (1) SHALL BE PER ANNEX A3 OF TPI1-2002 SEC.3. A SEAL ON THIS DRAWING INDICATES ACCEPTANCE OF PROFESSIONAL ENGINEERING RESPONSIBILITY SOLELY FOR THE TRUSS COMPONENT DESIGN SHOWN. THE SUITABILITY AND USE OF THIS COMPONENT FOR ANY BUILDING IS THE RESPONSIBILITY OF THE BUILDING DESIGNER PER ANSI/TPI 1 SEC. 2.

JAMES F. COLLINS, JR. CERTIFICATE No. 0052212 STATE OF FLORIDA PROFESSIONAL ENGINEER

Apr 04 '05

TC LL	20.0 PSF	REF R215-- 90437
TC DL	10.0 PSF	DATE 04/04/05
BC DL	10.0 PSF	DRW HCUSR215 05094021
BC LL	0.0 PSF	HC-ENG EC/AP *
TOT.LD.	40.0 PSF	SEQN- 130660
DUR.FAC.	1.25	FROM CDM
SPACING	24.0"	JREF- 1SLV215_Z07

Top chord 2x4 SP #2 N
Bot chord 2x4 SP #2 N
Webs 2x4 SP #2 N

(A) Continuous lateral bracing equally spaced on member.

Deflection meets L/240 live and L/180 total load.

Plates sized for a minimum of 3.00 sq.in./piece.

The overall height of this truss excluding overhang is 9-0-0.

110 mph wind, 30.00 ft mean hgt, ASCE 7-98, CLOSED bldg, not located within 6.50 ft from roof edge, CAT II, EXP B, wind TC DL=5.0 psf, wind BC DL=5.0 psf.

In lieu of structural panels use purlins to brace all flat TC @ 24" OC.

WARNING: Furnish a copy of this DWG to the installation contractor. Special care must be taken during handling, shipping and installation of trusses. See "WARNING" note below.

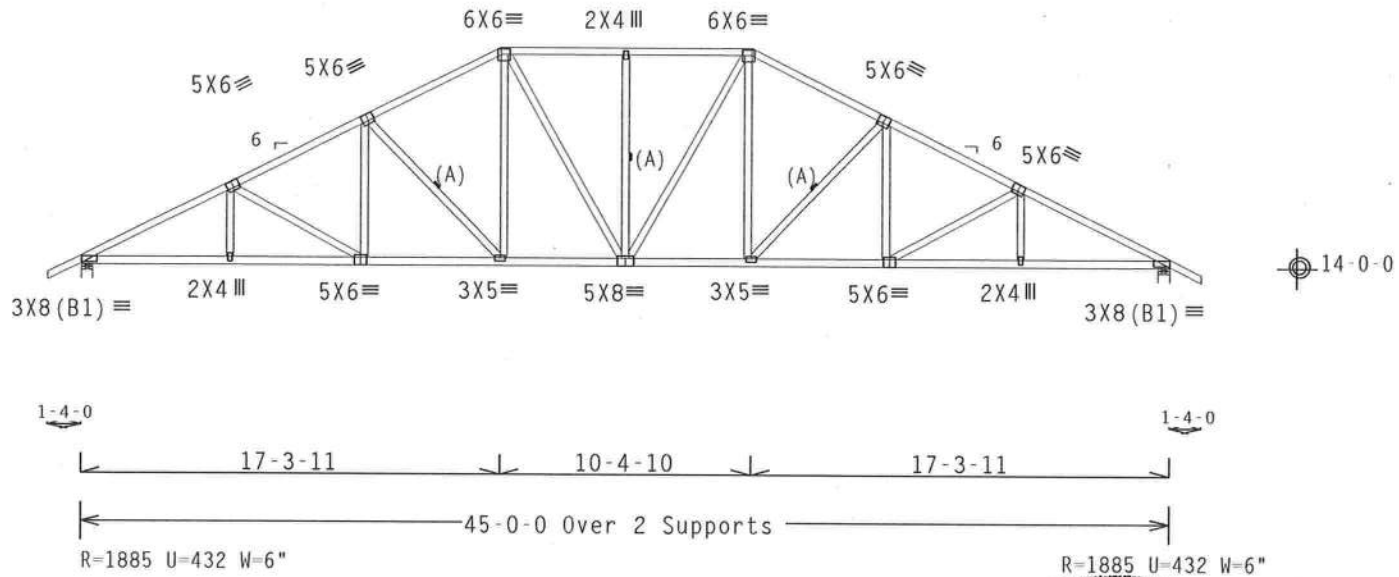

PLT TYP. Wave TPI\R Design Crit: TPI-1995(STD) 7.1 [illegible] FL/-/5/-/-/R/- Scale =.125"/Ft.

ALPINE

Alpine Engineered Products, Inc.
1950 Marley Drive
Haines City, FL 33844
FL Certificate of Authorization # 567

WARNING TRUSSES REQUIRE EXTREME CARE IN FABRICATION, HANDLING, SHIPPING, INSTALLING AND BRACING. REFER TO BCSI 1-03 (BUILDING COMPONENT SAFETY INFORMATION), PUBLISHED BY TPI (TRUSS PLATE INSTITUTE, 583 D'ONOFRIO DR., SUITE 200, MADISON, WI 53719) AND WTCA (WOOD TRUSS COUNCIL OF AMERICA, 6300 ENTERPRISE LN MADISON, WI 53719) FOR SAFETY PRACTICES PRIOR TO PERFORMING THESE FUNCTIONS. UNLESS OTHERWISE INDICATED TOP CHORD SHALL HAVE PROPERLY ATTACHED STRUCTURAL PANELS AND BOTTOM CHORD SHALL HAVE A PROPERLY ATTACHED RIGID CEILING.

IMPORTANT FURNISH A COPY OF THIS DESIGN TO THE INSTALLATION CONTRACTOR. ALPINE ENGINEERED PRODUCTS, INC. SHALL NOT BE RESPONSIBLE FOR ANY DEVIATION FROM THIS DESIGN; ANY FAILURE TO BUILD THE TRUSS IN CONFORMANCE WITH TPI; OR FABRICATING, HANDLING, SHIPPING, INSTALLING & BRACING OF TRUSSES. DESIGN CONFORMS WITH APPLICABLE PROVISIONS OF NDS (NATIONAL DESIGN SPEC, BY AF&PA) AND TPI. ALPINE CONNECTOR PLATES ARE MADE OF 20/18/16GA (W,H/S/K) ASTM A653 GRADE 40/60 (W, K/H,S) GALV. STEEL. APPLY PLATES TO EACH FACE OF TRUSS AND, UNLESS OTHERWISE LOCATED ON THIS DESIGN, POSITION PER DRAWINGS 160A-Z. ANY INSPECTION OF PLATES FOLLOWED BY (I) SHALL BE PER ANNEX A3 OF TPI1-2002 SEC.3. A SEAL ON THIS DRAWING INDICATES ACCEPTANCE OF PROFESSIONAL ENGINEERING RESPONSIBILITY SOLELY FOR THE TRUSS COMPONENT DESIGN SHOWN. THE SUITABILITY AND USE OF THIS COMPONENT FOR ANY BUILDING IS THE RESPONSIBILITY OF THE BUILDING DESIGNER PER ANSI/TPI 1 SEC. 2.

JAMES F. COLLINS, JR. CERTIFICATE No. 0052212 STATE OF FLORIDA PROFESSIONAL ENGINEER

Apr 04 '05

TC LL	20.0 PSF	REF R215-- 90438
TC DL	10.0 PSF	DATE 04/04/05
BC DL	10.0 PSF	DRW HCUSR215 05094022
BC LL	0.0 PSF	HC-ENG EC/AP *
TOT.LD.	40.0 PSF	SEQN- 130666
DUR.FAC.	1.25	FROM CDM
SPACING	24.0"	JREF- 1SLV215_Z07

Top chord 2x4 SP #2 N
Bot chord 2x4 SP #2 N
Webs 2x4 SP #2 N

(A) Continuous lateral bracing equally spaced on member.

Deflection meets L/240 live and L/180 total load.

Plates sized for a minimum of 3.00 sq.in./piece.

The overall height of this truss excluding overhang is 8-0-0.

110 mph wind, 30.00 ft mean hgt, ASCE 7-98, CLOSED bldg, not located within 6.50 ft from roof edge, CAT II, EXP B, wind TC DL=5.0 psf, wind BC DL=5.0 psf.

In lieu of structural panels use purlins to brace all flat TC @ 24" OC.

WARNING: Furnish a copy of this DWG to the installation contractor. Special care must be taken during handling, shipping and installation of trusses. See "WARNING" note below.

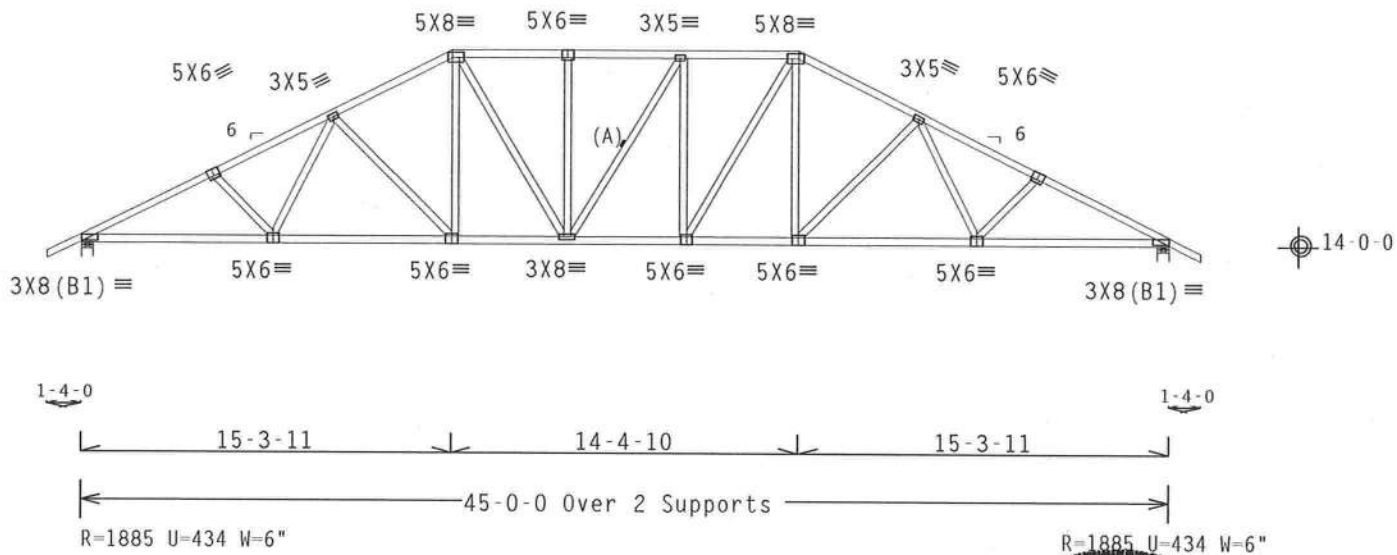

PLT TYP. Wave TPI\R

Design Crit: TPI-1995(STD) 7.1 11-20 Job:

FL/-/5/-/-/R/-

Scale =.125"/Ft.

ALPINE

Alpine Engineered Products, Inc.
1950 Marley Drive
Haines City, FL 33844
FL Certificate of Authorization # 567

WARNING TRUSSES REQUIRE EXTREME CARE IN FABRICATION, HANDLING, SHIPPING, INSTALLING AND BRACING. REFER TO BCSI 1-03 (BUILDING COMPONENT SAFETY INFORMATION), PUBLISHED BY TPI (TRUSS PLATE INSTITUTE, 583 D'ONOFRIO DR., SUITE 200, MADISON, WI 53719) AND WTCA (WOOD TRUSS COUNCIL OF AMERICA, 6300 ENTERPRISE LN. MADISON, WI 53719) FOR SAFETY PRACTICES PRIOR TO PERFORMING THESE FUNCTIONS. UNLESS OTHERWISE INDICATED TOP CHORD SHALL HAVE PROPERLY ATTACHED STRUCTURAL PANELS AND BOTTOM CHORD SHALL HAVE A PROPERLY ATTACHED RIGID CEILING.

IMPORTANT FURNISH A COPY OF THIS DESIGN TO THE INSTALLATION CONTRACTOR. ALPINE ENGINEERED PRODUCTS, INC. SHALL NOT BE RESPONSIBLE FOR ANY DEVIATION FROM THIS DESIGN; ANY FAILURE TO BUILD THE TRUSS IN CONFORMANCE WITH TPI; OR FABRICATING, HANDLING, SHIPPING, INSTALLING & BRACING OF TRUSSES. DESIGN CONFORMS WITH APPLICABLE PROVISIONS OF NDS (NATIONAL DESIGN SPEC. BY AF&PA) AND TPI. ALPINE CONNECTOR PLATES ARE MADE OF 20/18/16GA (W,H/S/X) ASTM A653 GRADE 40/60 (W, K/H,S) GALV. STEEL. APPLY PLATES TO EACH FACE OF TRUSS AND, UNLESS OTHERWISE LOCATED ON THIS DESIGN, POSITION PER DRAWINGS 160A-2. ANY INSPECTION OF PLATES FOLLOWED BY (I) SHALL BE PER ANNEX A3 OF TPI1-2002 SEC.3. A SEAL ON THIS DRAWING INDICATES ACCEPTANCE OF PROFESSIONAL ENGINEERING RESPONSIBILITY SOLELY FOR THE TRUSS COMPONENT DESIGN SHOWN. THE SUITABILITY AND USE OF THIS COMPONENT FOR ANY BUILDING IS THE RESPONSIBILITY OF THE BUILDING DESIGNER PER ANSI/TPI 1 SEC. 2.

JAMES F. COLLINS, JR. CERTIFICATE No. 0052212 STATE OF FLORIDA PROFESSIONAL ENGINEER

Apr 04 '05

TC LL	20.0 PSF	REF R215-- 90439
TC DL	10.0 PSF	DATE 04/04/05
BC DL	10.0 PSF	DRW HCUSR215 05094023
BC LL	0.0 PSF	HC-ENG EC/AP *
TOT.LD.	40.0 PSF	SEQN- 130672
DUR.FAC.	1.25	FROM CDM
SPACING	24.0"	JREF- 1SLV215_Z07

Top chord 2x4 SP #2 N
Bot chord 2x4 SP #2 N
Webs 2x4 SP #2 N

(A) Continuous lateral bracing equally spaced on member.

Deflection meets L/240 live and L/180 total load.

Plates sized for a minimum of 3.00 sq.in./piece.

The overall height of this truss excluding overhang is 7-0-0.

110 mph wind, 30.00 ft mean hgt, ASCE 7-98, CLOSED bldg, not located within 6.50 ft from roof edge, CAT II, EXP B, wind TC DL=5.0 psf, wind BC DL=5.0 psf.

In lieu of structural panels use purlins to brace all flat TC @ 24" OC.

WARNING: Furnish a copy of this DWG to the installation contractor. Special care must be taken during handling, shipping and installation of trusses. See "WARNING" note below.

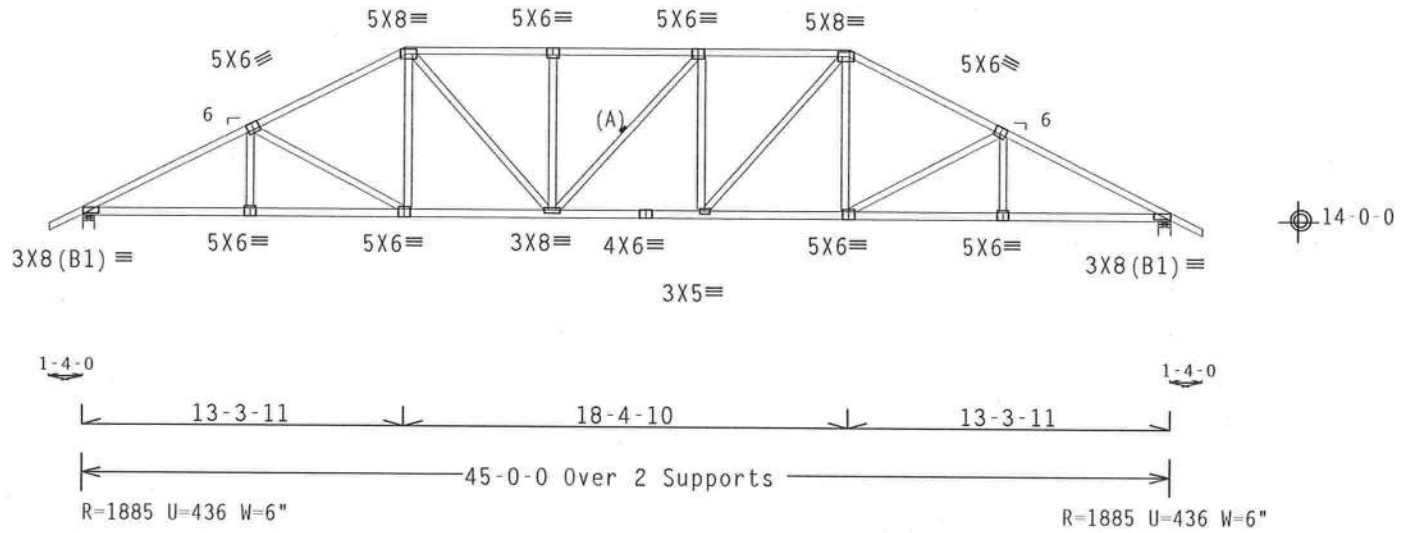

PLT TYP. Wave TPI\R Design Crit: TPI-1995(STD) 7.1 [illegible] FL/-/5/-/-/R/- Scale =.125"/Ft.

ALPINE
Alpine Engineered Products, Inc.
1950 Marley Drive
Haines City, FL 33844
FL Certificate of Authorization # 567

WARNING TRUSSES REQUIRE EXTREME CARE IN FABRICATION, HANDLING, SHIPPING, INSTALLING AND BRACING. REFER TO BCSI 1-03 (BUILDING COMPONENT SAFETY INFORMATION), PUBLISHED BY TPI (TRUSS PLATE INSTITUTE, 583 D'ONOFRIO DR., SUITE 200, MADISON, WI 53719) AND WTCA (WOOD TRUSS COUNCIL OF AMERICA, 6300 ENTERPRISE LN., MADISON, WI 53719) FOR SAFETY PRACTICES PRIOR TO PERFORMING THESE FUNCTIONS. UNLESS OTHERWISE INDICATED, TOP CHORD SHALL HAVE PROPERLY ATTACHED STRUCTURAL PANELS AND BOTTOM CHORD SHALL HAVE A PROPERLY ATTACHED RIGID CEILING.

IMPORTANT FURNISH A COPY OF THIS DESIGN TO THE INSTALLATION CONTRACTOR. ALPINE ENGINEERED PRODUCTS, INC. SHALL NOT BE RESPONSIBLE FOR ANY DEVIATION FROM THIS DESIGN; ANY FAILURE TO BUILD THE TRUSS IN CONFORMANCE WITH TPI; OR FABRICATING, HANDLING, SHIPPING, INSTALLING & BRACING OF TRUSSES. DESIGN CONFORMS WITH APPLICABLE PROVISIONS OF NDS (NATIONAL DESIGN SPEC. BY AF&PA) AND TPI. ALPINE CONNECTOR PLATES ARE MADE OF 20/18/16GA (W,H/S/K) ASTM A653 GRADE 40/60 (W, K/H,S) GALV. STEEL. APPLY PLATES TO EACH FACE OF TRUSS AND, UNLESS OTHERWISE LOCATED ON THIS DESIGN, POSITION PER DRAWINGS 160A-2. ANY INSPECTION OF PLATES FOLLOWED BY (1) SHALL BE PER ANNEX A3 OF TPI1-2002 SEC.3. A SEAL ON THIS DRAWING INDICATES ACCEPTANCE OF PROFESSIONAL ENGINEERING RESPONSIBILITY SOLELY FOR THE TRUSS COMPONENT DESIGN SHOWN. THE SUITABILITY AND USE OF THIS COMPONENT FOR ANY BUILDING IS THE RESPONSIBILITY OF THE BUILDING DESIGNER PER ANSI/TPI 1 SEC. 2.

JAMES F. COLLINS, JR. CERTIFICATE No. 0052212 STATE OF FLORIDA PROFESSIONAL ENGINEER
Apr 04 '05

TC LL	20.0 PSF	REF R215-- 90440
TC DL	10.0 PSF	DATE 04/04/05
BC DL	10.0 PSF	DRW HCUSR215 05094024
BC LL	0.0 PSF	HC-ENG EC/AP *
TOT.LD.	40.0 PSF	SEQN- 130678
DUR.FAC.	1.25	FROM CDM
SPACING	24.0"	JREF- 1SLV215_Z07

Top chord 2x4 SP #2 N
Bot chord 2x4 SP #2 N
Webs 2x4 SP #2 N

In lieu of structural panels use purlins to brace all flat TC @ 24" OC.

Plates sized for a minimum of 3.00 sq.in./piece.

The overall height of this truss excluding overhang is 6-0-0.

110 mph wind, 30.00 ft mean hgt, ASCE 7-98, CLOSED bldg, not located within 6.50 ft from roof edge, CAT II, EXP B, wind TC DL=5.0 psf, wind BC DL=5.0 psf.

Deflection meets L/240 live and L/180 total load.

WARNING: Furnish a copy of this DWG to the installation contractor. Special care must be taken during handling, shipping and installation of trusses. See "WARNING" note below.

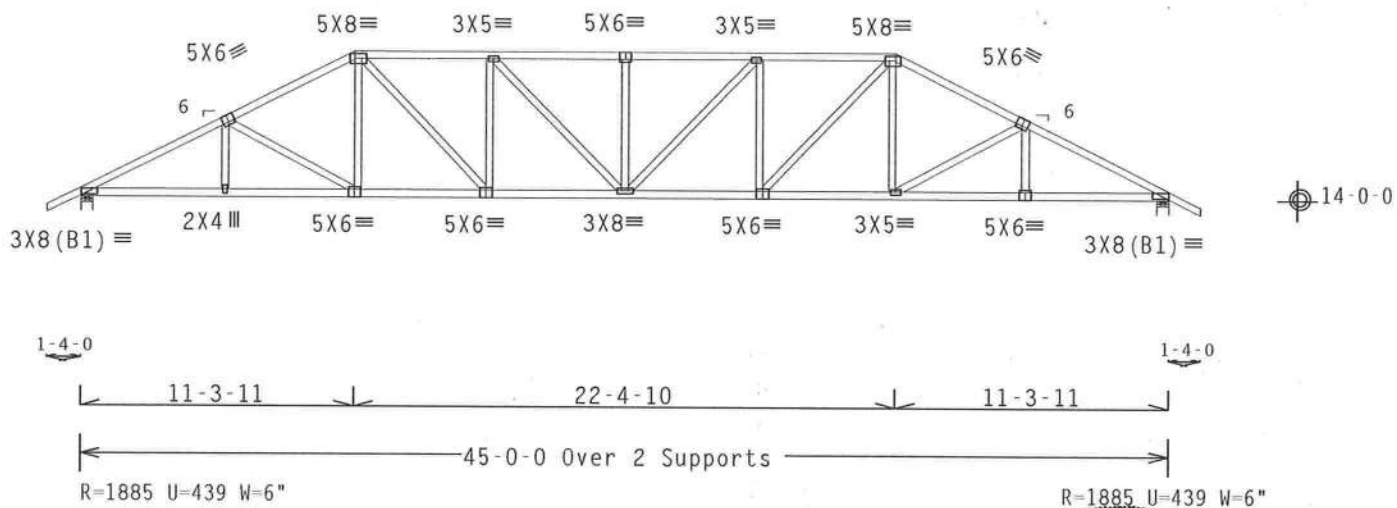

PLT TYP. Wave TPI\R

Design Crit: TPI-1995(STD)

7.1 [illegible]20

FL/-/5/-/-/R/-

Scale =.125"/Ft.

ALPINE

Alpine Engineered Products, Inc.
1950 Marley Drive
Haines City, FL 33844
FL Certificate of Authorization # 567

WARNING TRUSSES REQUIRE EXTREME CARE IN FABRICATION, HANDLING, SHIPPING, INSTALLING AND BRACING. REFER TO BCSI 1-03 (BUILDING COMPONENT SAFETY INFORMATION), PUBLISHED BY TPI (TRUSS PLATE INSTITUTE, 583 D'ONOFRIO DR., SUITE 200, MADISON, WI 53719) AND WTCA (WOOD TRUSS COUNCIL OF AMERICA, 6300 ENTERPRISE LN, MADISON, WI 53719) FOR SAFETY PRACTICES PRIOR TO PERFORMING THESE FUNCTIONS. UNLESS OTHERWISE INDICATED, TOP CHORD SHALL HAVE PROPERLY ATTACHED STRUCTURAL PANELS AND BOTTOM CHORD SHALL HAVE A PROPERLY ATTACHED RIGID CEILING.

IMPORTANT FURNISH A COPY OF THIS DESIGN TO THE INSTALLATION CONTRACTOR. ALPINE ENGINEERED PRODUCTS, INC. SHALL NOT BE RESPONSIBLE FOR ANY DEVIATION FROM THIS DESIGN; ANY FAILURE TO BUILD THE TRUSS IN CONFORMANCE WITH TPI; OR FABRICATING, HANDLING, SHIPPING, INSTALLING & BRACING OF TRUSSES. DESIGN CONFORMS WITH APPLICABLE PROVISIONS OF NDS (NATIONAL DESIGN SPEC. BY AF&PA) AND TPI. ALPINE CONNECTOR PLATES ARE MADE OF 20/18/16GA (W,H/S/K) ASTM A653 GRADE 40/60 (W, K/H,S) GALV. STEEL. APPLY PLATES TO EACH FACE OF TRUSS AND, UNLESS OTHERWISE LOCATED ON THIS DESIGN, POSITION PER DRAWINGS 160A-Z. ANY INSPECTION OF PLATES FOLLOWED BY (I) SHALL BE PER ANNEX A3 OF TPI1-2002 SEC.3. A SEAL ON THIS DRAWING INDICATES ACCEPTANCE OF PROFESSIONAL ENGINEERING RESPONSIBILITY SOLELY FOR THE TRUSS COMPONENT DESIGN SHOWN. THE SUITABILITY AND USE OF THIS COMPONENT FOR ANY BUILDING IS THE RESPONSIBILITY OF THE BUILDING DESIGNER PER ANSI/TPI 1 SEC. 2.

JAMES F. COLLINS, JR. CERTIFICATE No. 0052212 STATE OF FLORIDA PROFESSIONAL ENGINEER

Apr 04 '05

TC LL	20.0 PSF	REF R215-- 90441
TC DL	10.0 PSF	DATE 04/04/05
BC DL	10.0 PSF	DRW HCUSR215 05094025
BC LL	0.0 PSF	HC-ENG EC/AP *
TOT.LD.	40.0 PSF	SEQN- 130684
DUR.FAC.	1.25	FROM CDM
SPACING	24.0"	JREF- 1SLV215_Z07

Top chord 2x4 SP #2 N :T3, T6 2x4 SP SS:
Bot chord 2x4 SP #2 N
Webs 2x4 SP #2 N
:Lt Splice Block 2x4 SP #2 N:

Deflection meets L/240 live and L/180 total load.

WARNING: Furnish a copy of this DWG to the installation contractor. Special care must be taken during handling, shipping and installation of trusses. See "WARNING" note below.

110 mph wind, 30.00 ft mean hgt, ASCE 7-98, CLOSED bldg, not located within 6.50 ft from roof edge, CAT II, EXP B, wind TC DL=5.0 psf, wind BC DL=5.0 psf.

In lieu of structural panels use purlins to brace all flat TC @ 24" OC.

Plates sized for a minimum of 3.00 sq.in./piece.

The overall height of this truss excluding overhang is 5-0-0.

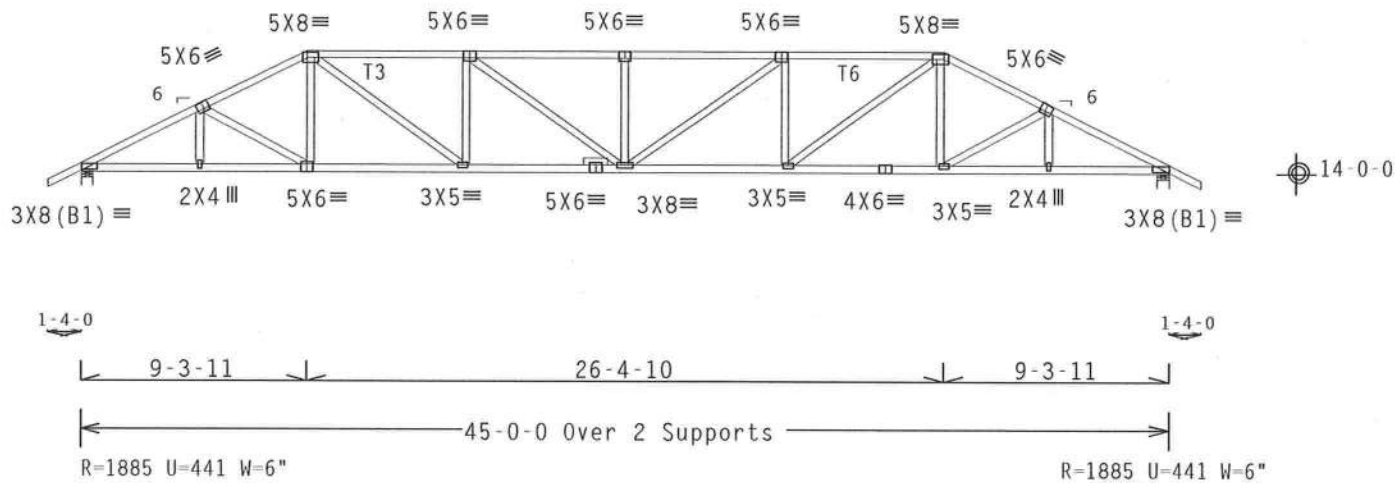

PLT TYP. Wave TPI\R | Design Crit: TPI-1995(STD) | 7.1 | FL/-/5/-/-/R/- | Scale =.125"/Ft.

ALPINE

Alpine Engineered Products, Inc.
1950 Marley Drive
Haines City, FL 33844
FL Certificate of Authorization # 567

WARNING TRUSSES REQUIRE EXTREME CARE IN FABRICATION, HANDLING, SHIPPING, INSTALLING AND BRACING. REFER TO BCSI 1-03 (BUILDING COMPONENT SAFETY INFORMATION), PUBLISHED BY TPI (TRUSS PLATE INSTITUTE, 583 D'ONOFRIO DR., SUITE 200, MADISON, WI 53719) AND WTCA (WOOD TRUSS COUNCIL OF AMERICA, 6300 ENTERPRISE LN, MADISON, WI 53719) FOR SAFETY PRACTICES PRIOR TO PERFORMING THESE FUNCTIONS. UNLESS OTHERWISE INDICATED, TOP CHORD SHALL HAVE PROPERLY ATTACHED STRUCTURAL PANELS AND BOTTOM CHORD SHALL HAVE A PROPERLY ATTACHED RIGID CEILING.

IMPORTANT FURNISH A COPY OF THIS DESIGN TO THE INSTALLATION CONTRACTOR. ALPINE ENGINEERED PRODUCTS, INC. SHALL NOT BE RESPONSIBLE FOR ANY DEVIATION FROM THIS DESIGN; ANY FAILURE TO BUILD THE TRUSS IN CONFORMANCE WITH TPI; OR FABRICATING, HANDLING, SHIPPING, INSTALLING & BRACING OF TRUSSES. DESIGN CONFORMS WITH APPLICABLE PROVISIONS OF NDS (NATIONAL DESIGN SPEC. BY AF&PA) AND TPI. ALPINE CONNECTOR PLATES ARE MADE OF 20/18/16GA (W,H/S/K) ASTM A653 GRADE 40/60 (H, K/H,S) GALV. STEEL. APPLY PLATES TO EACH FACE OF TRUSS AND, UNLESS OTHERWISE LOCATED ON THIS DESIGN, POSITION PER DRAWINGS 160A-Z. ANY INSPECTION OF PLATES FOLLOWED BY (I) SHALL BE PER ANNEX A3 OF TPI1-2002 SEC.3. A SEAL ON THIS DRAWING INDICATES ACCEPTANCE OF PROFESSIONAL ENGINEERING RESPONSIBILITY SOLELY FOR THE TRUSS COMPONENT DESIGN SHOWN. THE SUITABILITY AND USE OF THIS COMPONENT FOR ANY BUILDING IS THE RESPONSIBILITY OF THE BUILDING DESIGNER PER ANSI/TPI 1 SEC. 2.

JAMES F. COLLINS CERTIFICATE No. 0052212 STATE OF FLORIDA PROFESSIONAL ENGINEER

Apr 04 '05

TC LL	20.0 PSF	REF R215-- 90442
TC DL	10.0 PSF	DATE 04/04/05
BC DL	10.0 PSF	DRW HCUSR215 05094026
BC LL	0.0 PSF	HC-ENG EC/AP *
TOT.LD.	40.0 PSF	SEQN- 130690
DUR.FAC.	1.25	FROM CDM
SPACING	24.0"	JREF- 1SLV215_Z07

Top chord 2x4 SP #2 N
Bot chord 2x4 SP #2 N
Webs 2x4 SP #2 N

In lieu of rigid ceiling use purlins to brace BC @ 24" OC

Plates sized for a minimum of 3.00 sq.in./piece.

Refer to DWG PIGBACKB0204 for piggyback details.
Top chord of supporting truss under piggyback to be braced @ 24" O.C., unless otherwise specified.

110 mph wind, 30.00 ft mean hgt, ASCE 7-98, CLOSED bldg, Located anywhere in roof, CAT II, EXP B, wind TC DL=5.0 psf, wind BC DL=2.0 psf.

Deflection meets L/240 live and L/180 total load.

The overall height of this truss excluding overhang is 1-7-3.

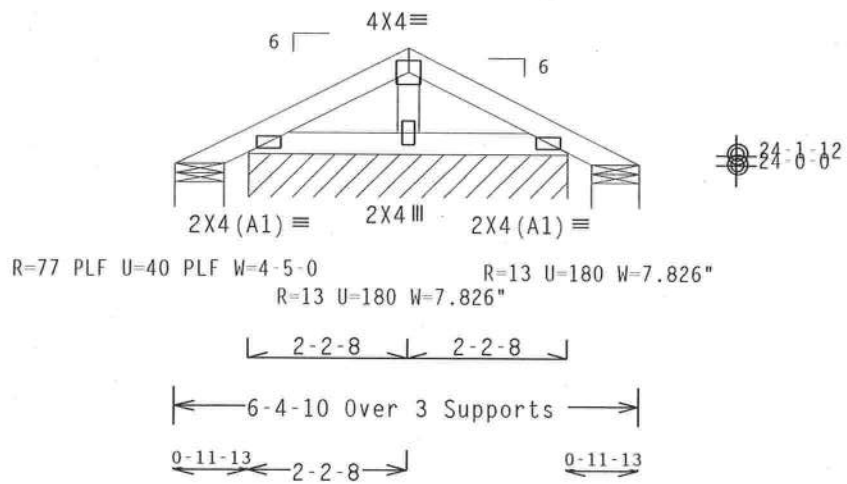

PLT TYP. Wave TPI\R Design Crit: TPI-1995(STD) 7.1 [illegible] 16 FL/-/5/-/-/R/- Scale =.375"/Ft.

ALPINE
Alpine Engineered Products, Inc.
1950 Marley Drive
Haines City, FL 33844
FL Certificate of Authorization # 567

WARNING TRUSSES REQUIRE EXTREME CARE IN FABRICATION, HANDLING, SHIPPING, INSTALLING AND BRACING. REFER TO BCSI 1-03 (BUILDING COMPONENT SAFETY INFORMATION), PUBLISHED BY TPI (TRUSS PLATE INSTITUTE, 583 D'ONOFRIO DR., SUITE 200, MADISON, WI 53719) AND WTCA (WOOD TRUSS COUNCIL OF AMERICA, 6300 ENTERPRISE LN MADISON, WI 53719) FOR SAFETY PRACTICES PRIOR TO PERFORMING THESE FUNCTIONS. UNLESS OTHERWISE INDICATED TOP CHORD SHALL HAVE PROPERLY ATTACHED STRUCTURAL PANELS AND BOTTOM CHORD SHALL HAVE A PROPERLY ATTACHED RIGID CEILING.

IMPORTANT FURNISH A COPY OF THIS DESIGN TO THE INSTALLATION CONTRACTOR. ALPINE ENGINEERED PRODUCTS, INC. SHALL NOT BE RESPONSIBLE FOR ANY DEVIATION FROM THIS DESIGN; ANY FAILURE TO BUILD THE TRUSS IN CONFORMANCE WITH TPI; OR FABRICATING, HANDLING, SHIPPING, INSTALLING & BRACING OF TRUSSES. DESIGN CONFORMS WITH APPLICABLE PROVISIONS OF NDS (NATIONAL DESIGN SPEC. BY AF&PA) AND TPI. ALPINE CONNECTOR PLATES ARE MADE OF 20/18/16GA (W,H/S/K) ASTM A653 GRADE 40/60 (W, K/H,S) GALV. STEEL. APPLY PLATES TO EACH FACE OF TRUSS AND, UNLESS OTHERWISE LOCATED ON THIS DESIGN, POSITION PER DRAWINGS 160A-Z. ANY INSPECTION OF PLATES FOLLOWED BY (1) SHALL BE PER ANNEX A3 OF TPI1-2002 SEC.3. A SEAL ON THIS DRAWING INDICATES ACCEPTANCE OF PROFESSIONAL ENGINEERING RESPONSIBILITY SOLELY FOR THE TRUSS COMPONENT DESIGN SHOWN. THE SUITABILITY AND USE OF THIS COMPONENT FOR ANY BUILDING IS THE RESPONSIBILITY OF THE BUILDING DESIGNER PER ANSI/TPI 1 SEC. 2.

JAMES F. COLLINS JR. CERTIFICATE No. 0052212 STATE OF FLORIDA PROFESSIONAL ENGINEER
Apr 04 '05

TC LL	20.0 PSF	REF	R215-- 90443
TC DL	10.0 PSF	DATE	04/04/05
BC DL	2.0 PSF	DRW	HCUSR215 05094031
BC LL	0.0 PSF	HC-ENG	EC/AP
TOT.LD.	32.0 PSF	SEQN-	43126
DUR.FAC.	1.25	FROM	CDM
SPACING	24.0"	JREF-	1SLV215_Z07

Top chord 2x4 SP #2 N
Bot chord 2x4 SP #2 Dense
Webs 2x4 SP #2 N

Deflection meets L/240 live and L/180 total load.

The overall height of this truss excluding overhang is 3-6-3.

110 mph wind, 30.00 ft mean hgt, ASCE 7-98, CLOSED bldg, Located anywhere in roof, CAT II, EXP B, wind TC DL=5.0 psf, wind BC DL=5.0 psf.

Plates sized for a minimum of 3.00 sq.in./piece.

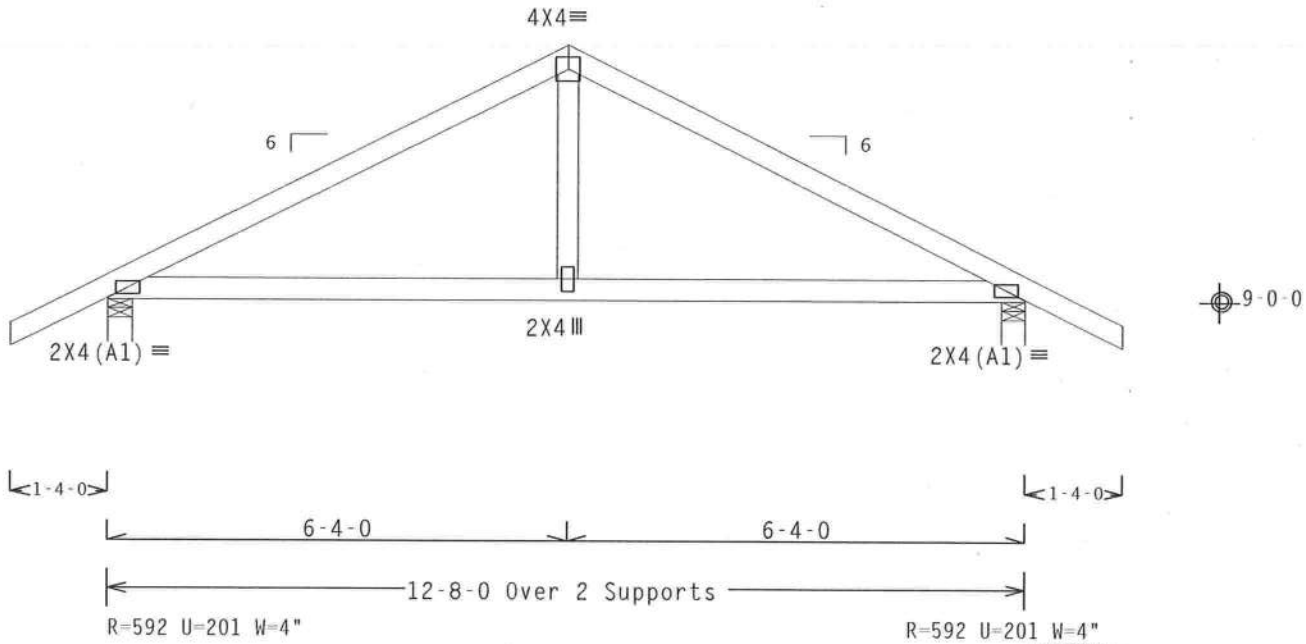

PLT TYP. Wave TPI\R Design Crit: TPI-1995(STD) 7.1 [illegible] 20 QTY 1 FL/-/5/-/-/R/- Scale =.375"/Ft.

ALPINE

Alpine Engineered Products, Inc.
1950 Marley Drive
Haines City, FL 33844
FL Certificate of Authorization # 567

WARNING TRUSSES REQUIRE EXTREME CARE IN FABRICATION, HANDLING, SHIPPING, INSTALLING AND BRACING. REFER TO BCSI 1-03 (BUILDING COMPONENT SAFETY INFORMATION), PUBLISHED BY TPI (TRUSS PLATE INSTITUTE, 583 D'ONOFRIO DR., SUITE 200, MADISON, WI 53719) AND WTCA (WOOD TRUSS COUNCIL OF AMERICA, 6300 ENTERPRISE LN MADISON, WI 53719) FOR SAFETY PRACTICES PRIOR TO PERFORMING THESE FUNCTIONS. UNLESS OTHERWISE INDICATED TOP CHORD SHALL HAVE PROPERLY ATTACHED STRUCTURAL PANELS AND BOTTOM CHORD SHALL HAVE A PROPERLY ATTACHED RIGID CEILING.

IMPORTANT FURNISH A COPY OF THIS DESIGN TO THE INSTALLATION CONTRACTOR. ALPINE ENGINEERED PRODUCTS, INC. SHALL NOT BE RESPONSIBLE FOR ANY DEVIATION FROM THIS DESIGN; ANY FAILURE TO BUILD THE TRUSS IN CONFORMANCE WITH TPI; OR FABRICATING, HANDLING, SHIPPING, INSTALLING & BRACING OF TRUSSES DESIGN CONFORMS WITH APPLICABLE PROVISIONS OF NDS (NATIONAL DESIGN SPEC, BY AF&PA) AND TPI. ALPINE CONNECTOR PLATES ARE MADE OF 20/18/16GA (W,H/S/K) ASTM A653 GRADE 40/60 (W, K/H,S) GALV. STEEL. APPLY PLATES TO EACH FACE OF TRUSS AND, UNLESS OTHERWISE LOCATED ON THIS DESIGN, POSITION PER DRAWINGS 160A-2 ANY INSPECTION OF PLATES FOLLOWED BY (1) SHALL BE PER ANNEX A3 OF TPI1-2002 SEC.3. A SEAL ON THIS DRAWING INDICATES ACCEPTANCE OF PROFESSIONAL ENGINEERING RESPONSIBILITY SOLELY FOR THE TRUSS COMPONENT DESIGN SHOWN. THE SUITABILITY AND USE OF THIS COMPONENT FOR ANY BUILDING IS THE RESPONSIBILITY OF THE BUILDING DESIGNER PER ANSI/TPI 1 SEC. 2.

JAMES F. COLLINS, III
CERTIFICATE
No. 0052212
STATE OF FLORIDA
PROFESSIONAL ENGINEER
Apr 04 '05

TC LL	20.0 PSF	REF R215-- 90444
TC DL	10.0 PSF	DATE 04/04/05
BC DL	10.0 PSF	DRW HCUSR215 05094027
BC LL	0.0 PSF	HC-ENG EC/AP *
TOT.LD.	40.0 PSF	SEQN- 130738
DUR.FAC.	1.25	FROM LB
SPACING	24.0"	JREF- 1SLV215_Z07

Top chord 2x4 SP #2 N
Bot chord 2x4 SP #2 Dense
Webs 2x4 SP #2 N

Deflection meets L/240 live and L/180 total load.

The overall height of this truss excluding overhang is 3-6-3.

110 mph wind, 30.00 ft mean hgt, ASCE 7-98, CLOSED bldg, not located within 4.50 ft from roof edge, CAT II, EXP B, wind TC DL=5.0 psf, wind BC DL=5.0 psf.

Plates sized for a minimum of 3.00 sq.in./piece.

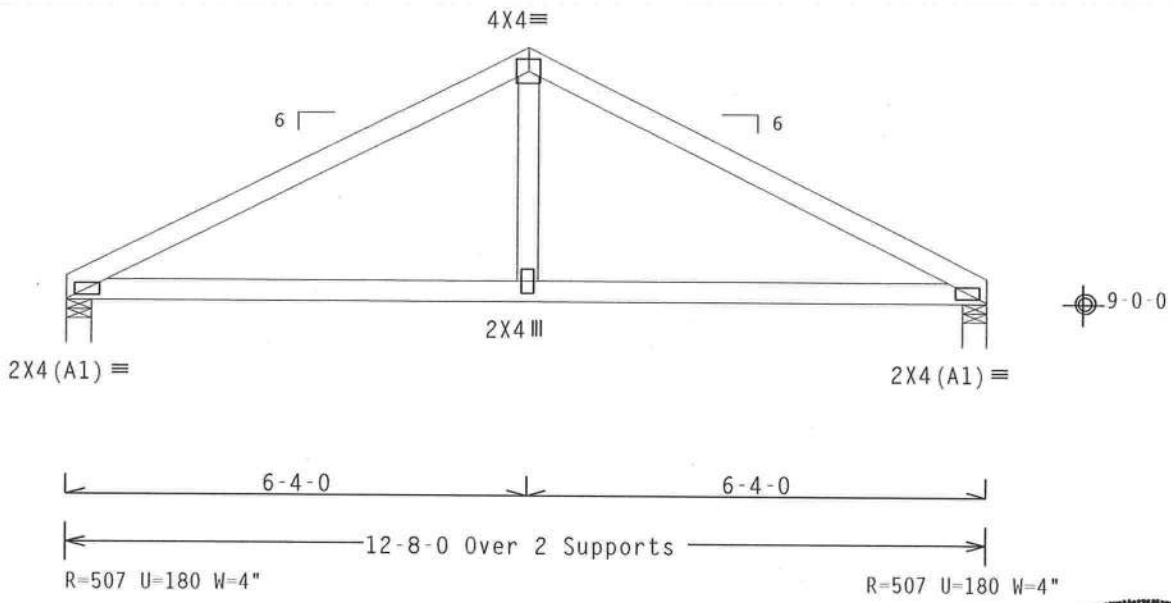

PLT TYP. Wave TPI\R

Design Crit: TPI-1995(STD)

7.1[illegible]

FL/-/5/-/-/R/-

Scale =.375"/Ft.

ALPINE

Alpine Engineered Products, Inc.
1950 Marley Drive
Haines City, FL 33844
FL Certificate of Authorization # 567

WARNING TRUSSES REQUIRE EXTREME CARE IN FABRICATION, HANDLING, SHIPPING, INSTALLING AND BRACING. REFER TO BCSI 1-03 (BUILDING COMPONENT SAFETY INFORMATION), PUBLISHED BY TPI (TRUSS PLATE INSTITUTE, 583 D'ONOFRIO DR., SUITE 200, MADISON, WI 53719) AND WTCA (WOOD TRUSS COUNCIL OF AMERICA, 6300 ENTERPRISE LN, MADISON, WI 53719) FOR SAFETY PRACTICES PRIOR TO PERFORMING THESE FUNCTIONS. UNLESS OTHERWISE INDICATED, TOP CHORD SHALL HAVE PROPERLY ATTACHED STRUCTURAL PANELS AND BOTTOM CHORD SHALL HAVE A PROPERLY ATTACHED RIGID CEILING.

IMPORTANT FURNISH A COPY OF THIS DESIGN TO THE INSTALLATION CONTRACTOR. ALPINE ENGINEERED PRODUCTS, INC. SHALL NOT BE RESPONSIBLE FOR ANY DEVIATION FROM THIS DESIGN; ANY FAILURE TO BUILD THE TRUSS IN CONFORMANCE WITH TPI; OR FABRICATING, HANDLING, SHIPPING, INSTALLING & BRACING OF TRUSSES. DESIGN CONFORMS WITH APPLICABLE PROVISIONS OF NDS (NATIONAL DESIGN SPEC. BY AF&PA) AND TPI. ALPINE CONNECTOR PLATES ARE MADE OF 20/18/16GA (W,H/S/K) ASTM A653 GRADE 40/60 (W, K/H,S) GALV. STEEL. APPLY PLATES TO EACH FACE OF TRUSS AND, UNLESS OTHERWISE LOCATED ON THIS DESIGN, POSITION PER DRAWINGS 160A-Z. ANY INSPECTION OF PLATES FOLLOWED BY (I) SHALL BE PER ANNEX A3 OF TPI1-2002 SEC.3. A SEAL ON THIS DRAWING INDICATES ACCEPTANCE OF PROFESSIONAL ENGINEERING RESPONSIBILITY SOLELY FOR THE TRUSS COMPONENT DESIGN SHOWN. THE SUITABILITY AND USE OF THIS COMPONENT FOR ANY BUILDING IS THE RESPONSIBILITY OF THE BUILDING DESIGNER PER ANSI/TPI 1 SEC. 2.

JAMES F. COLLINS JR. CERTIFICATE No. 0052212 STATE OF FLORIDA PROFESSIONAL ENGINEER

Apr 04 '05

TC LL	20.0 PSF	REF R215-- 90445
TC DL	10.0 PSF	DATE 04/04/05
BC DL	10.0 PSF	DRW HCUSR215 05094028
BC LL	0.0 PSF	HC-ENG EC/AP *
TOT.LD.	40.0 PSF	SEQN- 130744
DUR.FAC.	1.25	FROM CDM
SPACING	24.0"	JREF- 1SLV215_Z07

Top chord 2x4 SP #2 N
Bot chord 2x4 SP #2 N
Webs 2x4 SP #2 N

Deflection meets L/240 live and L/180 total load.

The overall height of this truss excluding overhang is 10-1-3.

110 mph wind, 30.00 ft mean hgt, ASCE 7-98, CLOSED bldg, not located within 4.50 ft from roof edge, CAT II, EXP B, wind TC DL=5.0 psf, wind BC DL=5.0 psf.

Plates sized for a minimum of 3.00 sq.in./piece.

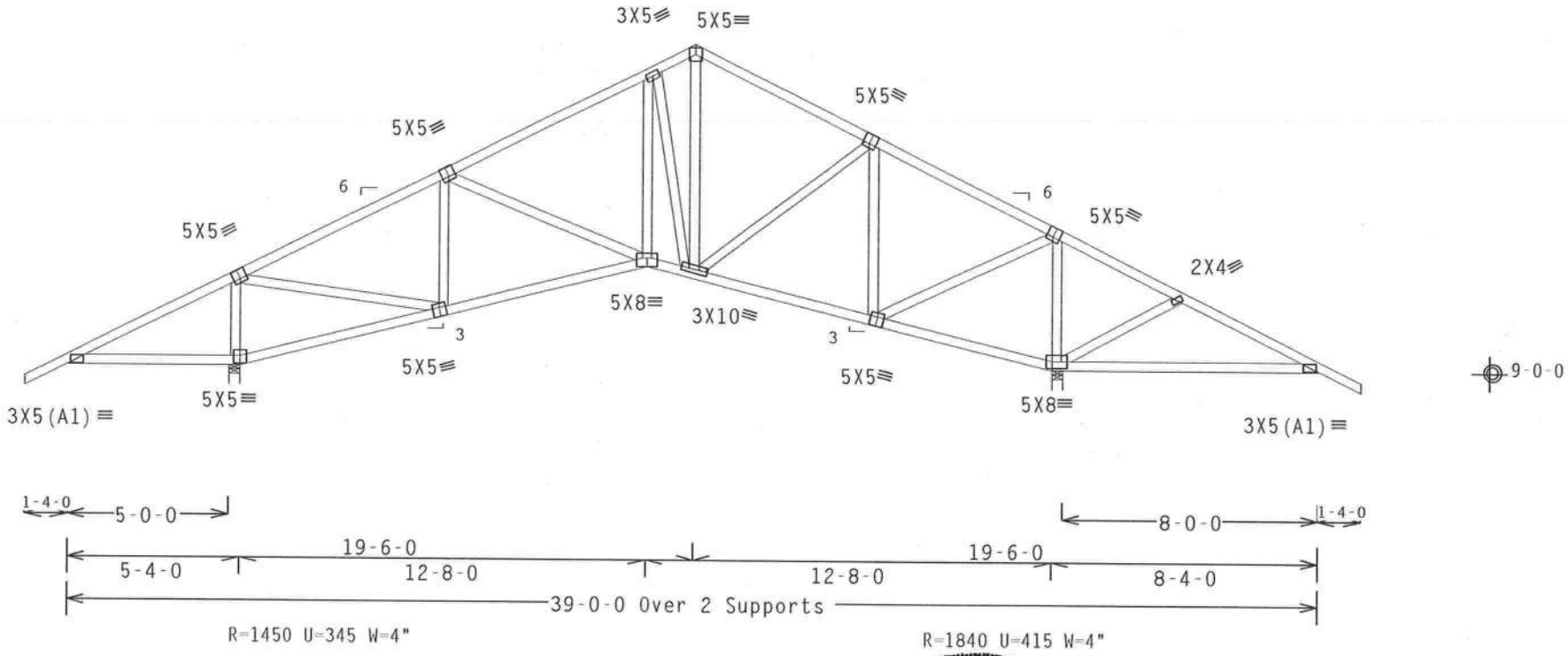

PLT TYP. Wave TPI\R Design Crit: TPI-1995(STD) 7.1[illegible] 05[illegible]5 FL/-/5/-/-/R/- Scale =.1875"/Ft.

ALPINE

Alpine Engineered Products, Inc.
1950 Marley Drive
Haines City, FL 33844
FL Certificate of Authorization # 567

WARNING TRUSSES REQUIRE EXTREME CARE IN FABRICATION, HANDLING, SHIPPING, INSTALLING AND BRACING. REFER TO BCSI 1-03 (BUILDING COMPONENT SAFETY INFORMATION), PUBLISHED BY TPI (TRUSS PLATE INSTITUTE, 583 D'ONOFRIO DR., SUITE 200, MADISON, WI 53719) AND WTCA (WOOD TRUSS COUNCIL OF AMERICA, 6300 ENTERPRISE LN, MADISON, WI 53719) FOR SAFETY PRACTICES PRIOR TO PERFORMING THESE FUNCTIONS. UNLESS OTHERWISE INDICATED, TOP CHORD SHALL HAVE PROPERLY ATTACHED STRUCTURAL PANELS AND BOTTOM CHORD SHALL HAVE A PROPERLY ATTACHED RIGID CEILING.

IMPORTANT FURNISH A COPY OF THIS DESIGN TO THE INSTALLATION CONTRACTOR. ALPINE ENGINEERED PRODUCTS, INC. SHALL NOT BE RESPONSIBLE FOR ANY DEVIATION FROM THIS DESIGN; ANY FAILURE TO BUILD THE TRUSS IN CONFORMANCE WITH TPI; OR FABRICATING, HANDLING, SHIPPING, INSTALLING & BRACING OF TRUSSES DESIGN CONFORMS WITH APPLICABLE PROVISIONS OF NDS (NATIONAL DESIGN SPEC. BY AF&PA) AND TPI. ALPINE CONNECTOR PLATES ARE MADE OF 20/18/16GA (W,H/S/K) ASTM A653 GRADE 40/60 (W, K/H,S) GALV. STEEL. APPLY PLATES TO EACH FACE OF TRUSS AND, UNLESS OTHERWISE LOCATED ON THIS DESIGN, POSITION PER DRAWINGS 160A-Z. ANY INSPECTION OF PLATES FOLLOWED BY (I) SHALL BE PER ANNEX A3 OF TPI1-2002 SEC.3. A SEAL ON THIS DRAWING INDICATES ACCEPTANCE OF PROFESSIONAL ENGINEERING RESPONSIBILITY SOLELY FOR THE TRUSS COMPONENT DESIGN SHOWN. THE SUITABILITY AND USE OF THIS COMPONENT FOR ANY BUILDING IS THE RESPONSIBILITY OF THE BUILDING DESIGNER PER ANSI/TPI 1 SEC. 2.

JAMES F. COLLINS JR. CERTIFICATE No. 0052212 STATE OF FLORIDA PROFESSIONAL ENGINEER
Apr 04 '05

TC LL	20.0 PSF	REF R215-- 90446
TC DL	10.0 PSF	DATE 04/04/05
BC DL	10.0 PSF	DRW HCUSR215 05094032
BC LL	0.0 PSF	HC-ENG EC/AP
TOT.LD.	40.0 PSF	SEQN- 130763
DUR.FAC.	1.25	FROM CDM
SPACING	24.0"	JREF- 1SLV215_Z07

Top chord 2x4 SP #2 N
Bot chord 2x4 SP #2 N
Webs 2x4 SP #2 N

The overall height of this truss excluding overhang is 10-1-3.

110 mph wind, 30.00 ft mean hgt, ASCE 7-98, CLOSED bldg, Located anywhere in roof, CAT II, EXP B, wind TC DL=5.0 psf, wind BC DL=5.0 psf.

(A) Continuous lateral bracing equally spaced on member.

Deflection meets L/240 live and L/180 total load.

Plates sized for a minimum of 3.00 sq.in./piece.

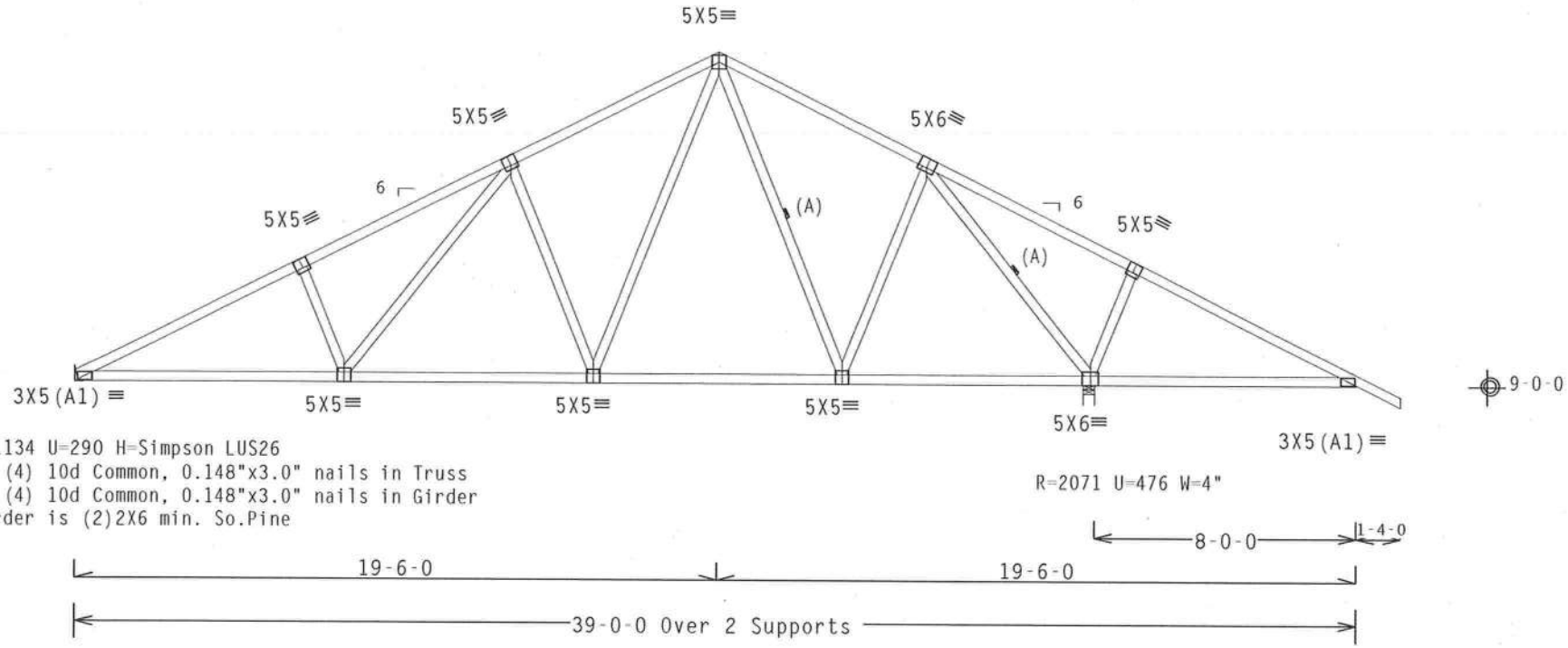

PLT TYP. Wave TPI\R

Design Crit: TPI-1995(STD)

7.1 ... 07/06

FL/-/5/-/-/R/-

Scale =.1875"/Ft.

ALPINE

Alpine Engineered Products, Inc.
1950 Marley Drive
Haines City, FL 33844
FL Certificate of Authorization # 567

WARNING TRUSSES REQUIRE EXTREME CARE IN FABRICATION, HANDLING, SHIPPING, INSTALLING AND BRACING. REFER TO BCSI 1-03 (BUILDING COMPONENT SAFETY INFORMATION), PUBLISHED BY TPI (TRUSS PLATE INSTITUTE, 583 D'ONOFRIO DR., SUITE 200, MADISON, WI 53719) AND WTCA (WOOD TRUSS COUNCIL OF AMERICA, 6300 ENTERPRISE LN MADISON, WI 53719) FOR SAFETY PRACTICES PRIOR TO PERFORMING THESE FUNCTIONS. UNLESS OTHERWISE INDICATED TOP CHORD SHALL HAVE PROPERLY ATTACHED STRUCTURAL PANELS AND BOTTOM CHORD SHALL HAVE A PROPERLY ATTACHED RIGID CEILING.

IMPORTANT FURNISH A COPY OF THIS DESIGN TO THE INSTALLATION CONTRACTOR. ALPINE ENGINEERED PRODUCTS, INC. SHALL NOT BE RESPONSIBLE FOR ANY DEVIATION FROM THIS DESIGN; ANY FAILURE TO BUILD THE TRUSS IN CONFORMANCE WITH TPI; OR FABRICATING, HANDLING, SHIPPING, INSTALLING & BRACING OF TRUSSES. DESIGN CONFORMS WITH APPLICABLE PROVISIONS OF NDS (NATIONAL DESIGN SPEC. BY AF&PA) AND TPI. ALPINE CONNECTOR PLATES ARE MADE OF 20/18/16GA (W,H/S/K) ASTM A653 GRADE 40/60 (W, K/H,S) GALV. STEEL. APPLY PLATES TO EACH FACE OF TRUSS AND, UNLESS OTHERWISE LOCATED ON THIS DESIGN, POSITION PER DRAWINGS 160A-Z. ANY INSPECTION OF PLATES FOLLOWED BY (I) SHALL BE PER ANNEX A3 OF TPI1-2002 SEC.3. A SEAL ON THIS DRAWING INDICATES ACCEPTANCE OF PROFESSIONAL ENGINEERING RESPONSIBILITY SOLELY FOR THE TRUSS COMPONENT DESIGN SHOWN. THE SUITABILITY AND USE OF THIS COMPONENT FOR ANY BUILDING IS THE RESPONSIBILITY OF THE BUILDING DESIGNER PER ANSI/TPI 1 SEC. 2.

JAMES F. COLLINS
CERTIFICATE NO.
No. 0052212
STATE OF FLORIDA
PROFESSIONAL ENGINEER

Apr 04 '05

TC LL	20.0 PSF	REF	R215-- 90447
TC DL	10.0 PSF	DATE	04/04/05
BC DL	10.0 PSF	DRW	HCUSR215 05094033
BC LL	0.0 PSF	HC-ENG	EC/AP
TOT.LD.	40.0 PSF	SEQN-	130751
DUR.FAC.	1.25	FROM	CDM
SPACING	24.0"	JREF-	1SLV215_Z07

Top chord 2x4 SP #2 N
Bot chord 2x4 SP #2 N
Webs 2x4 SP #2 N

Left end vertical not exposed to wind pressure.

(A) Continuous lateral bracing equally spaced on member.

Plates sized for a minimum of 3.00 sq.in./piece.

110 mph wind, 30.00 ft mean hgt, ASCE 7-98, CLOSED bldg, not located within 4.50 ft from roof edge, CAT II, EXP B, wind TC DL=5.0 psf, wind BC DL=5.0 psf.

Deflection meets L/240 live and L/180 total load.

The overall height of this truss excluding overhang is 9-3-11.

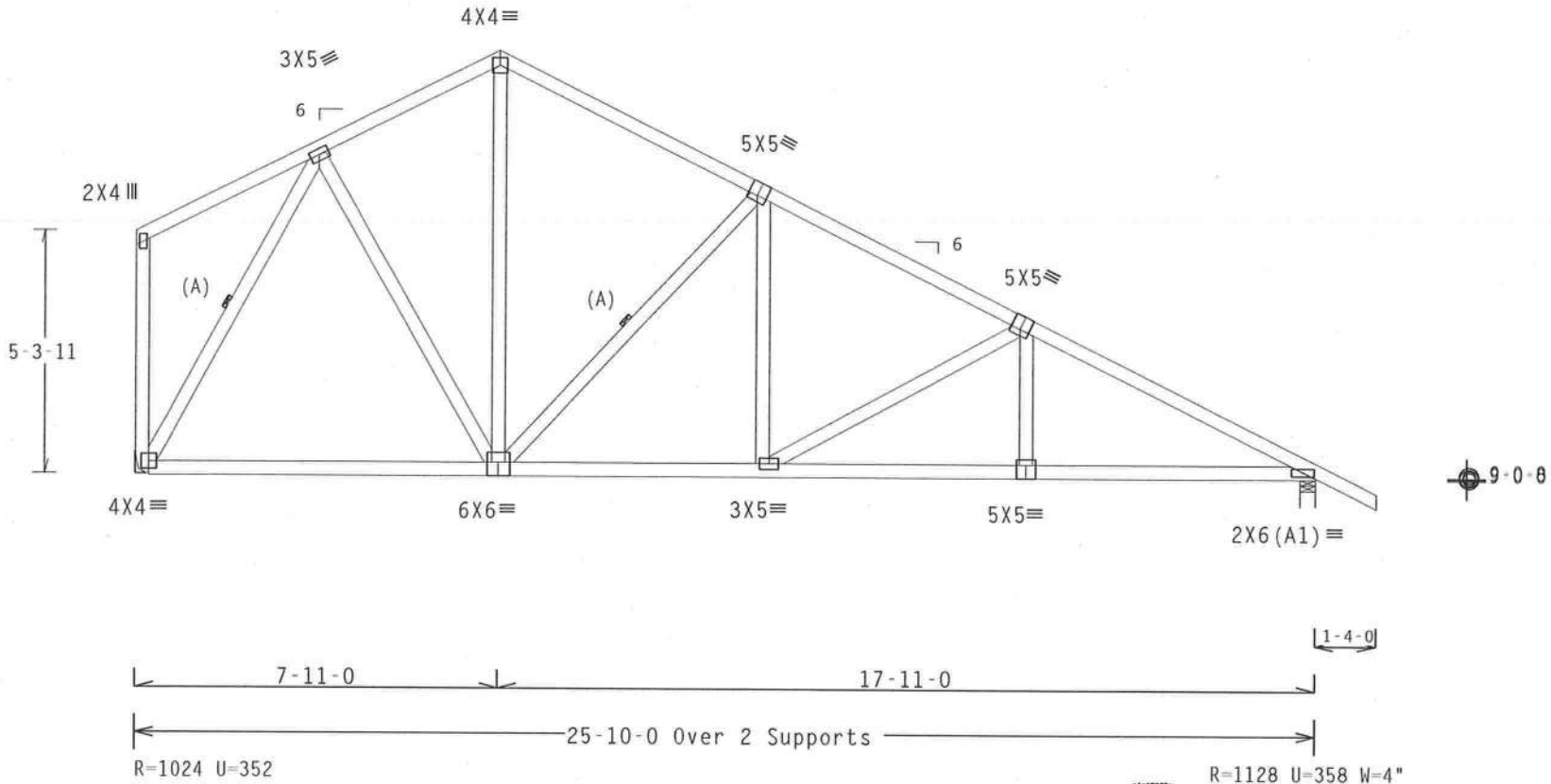

PLT TYP. Wave TPI\R | Design Crit: TPI-1995(STD) | 7.1 | FL/-/5/-/-/R/- | Scale =.25"/Ft.

ALPINE

Alpine Engineered Products, Inc.
1950 Marley Drive
Haines City, FL 33844
FL Certificate of Authorization # 567

WARNING TRUSSES REQUIRE EXTREME CARE IN FABRICATION, HANDLING, SHIPPING, INSTALLING AND BRACING. REFER TO BCSI 1-03 (BUILDING COMPONENT SAFETY INFORMATION), PUBLISHED BY TPI (TRUSS PLATE INSTITUTE, 583 D'ONOFRIO DR., SUITE 200, MADISON, WI 53719) AND WTCA (WOOD TRUSS COUNCIL OF AMERICA, 6300 ENTERPRISE LN, MADISON, WI 53719) FOR SAFETY PRACTICES PRIOR TO PERFORMING THESE FUNCTIONS. UNLESS OTHERWISE INDICATED, TOP CHORD SHALL HAVE PROPERLY ATTACHED STRUCTURAL PANELS AND BOTTOM CHORD SHALL HAVE A PROPERLY ATTACHED RIGID CEILING.

IMPORTANT FURNISH A COPY OF THIS DESIGN TO THE INSTALLATION CONTRACTOR. ALPINE ENGINEERED PRODUCTS, INC. SHALL NOT BE RESPONSIBLE FOR ANY DEVIATION FROM THIS DESIGN; ANY FAILURE TO BUILD THE TRUSS IN CONFORMANCE WITH TPI; OR FABRICATING, HANDLING, SHIPPING, INSTALLING & BRACING OF TRUSSES. DESIGN CONFORMS WITH APPLICABLE PROVISIONS OF NDS (NATIONAL DESIGN SPEC. BY AF&PA) AND TPI. ALPINE CONNECTOR PLATES ARE MADE OF 20/18/16GA (W,H/S/K) ASTM A653 GRADE 40/60 (W, K/H,S) GALV. STEEL. APPLY PLATES TO EACH FACE OF TRUSS AND, UNLESS OTHERWISE LOCATED ON THIS DESIGN, POSITION PER DRAWINGS 160A-Z. ANY INSPECTION OF PLATES FOLLOWED BY (1) SHALL BE PER ANNEX A3 OF TPI1-2002 SEC.3. A SEAL ON THIS DRAWING INDICATES ACCEPTANCE OF PROFESSIONAL ENGINEERING RESPONSIBILITY SOLELY FOR THE TRUSS COMPONENT DESIGN SHOWN. THE SUITABILITY AND USE OF THIS COMPONENT FOR ANY BUILDING IS THE RESPONSIBILITY OF THE BUILDING DESIGNER PER ANSI/TPI 1 SEC. 2.

JAMES F. COLLINS, JR. CERTIFICATE No. 0052212 STATE OF FLORIDA PROFESSIONAL ENGINEER

Apr 04 '05

TC LL	20.0 PSF	REF R215-- 90448
TC DL	10.0 PSF	DATE 04/04/05
BC DL	10.0 PSF	DRW HCUSR215 05094034
BC LL	0.0 PSF	HC-ENG EC/AP
TOT.LD.	40.0 PSF	SEQN- 130778
DUR.FAC.	1.25	FROM CDM
SPACING	24.0"	JREF- 1SLV215_Z07

Top chord 2x4 SP #2 N
Bot chord 2x4 SP #2 N
Webs 2x4 SP #2 N
:Lt Bearing Leg 2x4 SP #2 N:

(A) Continuous lateral bracing equally spaced on member.

In lieu of structural panels use purlins to brace all flat TC @ 24" OC.

110 mph wind, 30.00 ft mean hgt, ASCE 7-98, CLOSED bldg, not located within 4.50 ft from roof edge, CAT II, EXP B, wind TC DL=5.0 psf, wind BC DL=5.0 psf.

Deflection meets L/240 live and L/180 total load.

Plates sized for a minimum of 3.00 sq.in./piece.

The overall height of this truss excluding overhang is 8-5-1.

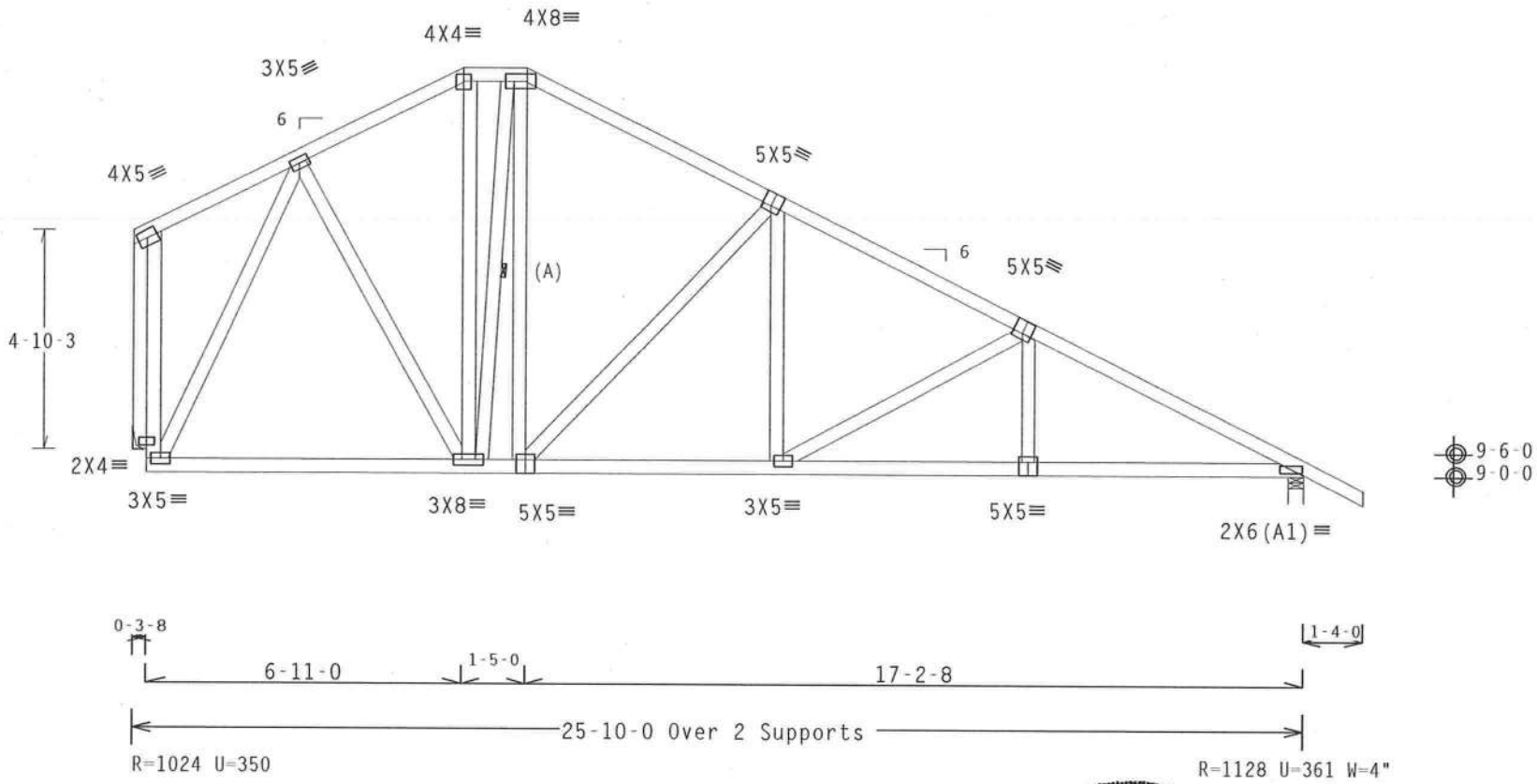

PLT TYP. Wave TPI\R Design Crit: TPI-1995(STD) 7.1 [illegible] FL/-/5/-/-/R/- Scale =.25"/Ft.

ALPINE
Alpine Engineered Products, Inc.
1950 Marley Drive
Haines City, FL 33844
FL Certificate of Authorization # 567

WARNING TRUSSES REQUIRE EXTREME CARE IN FABRICATION, HANDLING, SHIPPING, INSTALLING AND BRACING. REFER TO BCSI 1-03 (BUILDING COMPONENT SAFETY INFORMATION), PUBLISHED BY TPI (TRUSS PLATE INSTITUTE, 583 D'ONOFRIO DR., SUITE 200, MADISON, WI 53719) AND WTCA (WOOD TRUSS COUNCIL OF AMERICA, 6300 ENTERPRISE LN MADISON, WI 53719) FOR SAFETY PRACTICES PRIOR TO PERFORMING THESE FUNCTIONS. UNLESS OTHERWISE INDICATED TOP CHORD SHALL HAVE PROPERLY ATTACHED STRUCTURAL PANELS AND BOTTOM CHORD SHALL HAVE A PROPERLY ATTACHED RIGID CEILING.

IMPORTANT FURNISH A COPY OF THIS DESIGN TO THE INSTALLATION CONTRACTOR. ALPINE ENGINEERED PRODUCTS, INC. SHALL NOT BE RESPONSIBLE FOR ANY DEVIATION FROM THIS DESIGN; ANY FAILURE TO BUILD THE TRUSS IN CONFORMANCE WITH TPI; OR FABRICATING, HANDLING, SHIPPING, INSTALLING & BRACING OF TRUSSES DESIGN CONFORMS WITH APPLICABLE PROVISIONS OF NDS (NATIONAL DESIGN SPEC. BY AF&PA) AND TPI. ALPINE CONNECTOR PLATES ARE MADE OF 20/18/16GA (W,H/S/K) ASTM A653 GRADE 40/60 (W. K/H.S) GALV. STEEL. APPLY PLATES TO EACH FACE OF TRUSS AND, UNLESS OTHERWISE LOCATED ON THIS DESIGN, POSITION PER DRAWINGS 160A-Z. ANY INSPECTION OF PLATES FOLLOWED BY (1) SHALL BE PER ANNEX A3 OF TPI1-2002 SEC.3. A SEAL ON THIS DRAWING INDICATES ACCEPTANCE OF PROFESSIONAL ENGINEERING RESPONSIBILITY SOLELY FOR THE TRUSS COMPONENT DESIGN SHOWN. THE SUITABILITY AND USE OF THIS COMPONENT FOR ANY BUILDING IS THE RESPONSIBILITY OF THE BUILDING DESIGNER PER ANSI/TPI 1 SEC. 2.

JAMES F. COLLINS
CERTIFICATE
No. 0052212
STATE OF FLORIDA
PROFESSIONAL ENGINEER
Apr 04 '05

TC LL	20.0 PSF	REF R215-- 90449
TC DL	10.0 PSF	DATE 04/04/05
BC DL	10.0 PSF	DRW HCUSR215 05094035
BC LL	0.0 PSF	HC-ENG EC/AP
TOT.LD.	40.0 PSF	SEQN- 130787
DUR.FAC.	1.25	FROM CDM
SPACING	24.0"	JREF- 1SLV215_Z07

Top chord 2x4 SP #2 N
Bot chord 2x4 SP #2 N
Webs 2x4 SP #2 N
:Lt Bearing Leg 2x4 SP #2 N:

(A) Continuous lateral bracing equally spaced on member.

In lieu of structural panels use purlins to brace all flat TC @ 24" OC.

The overall height of this truss excluding overhang is 6-11-1.

110 mph wind, 30.00 ft mean hgt, ASCE 7-98, CLOSED bldg, not located within 4.50 ft from roof edge, CAT II, EXP B, wind TC DL=5.0 psf, wind BC DL=5.0 psf.

Deflection meets L/240 live and L/180 total load.

Plates sized for a minimum of 3.00 sq.in./piece.

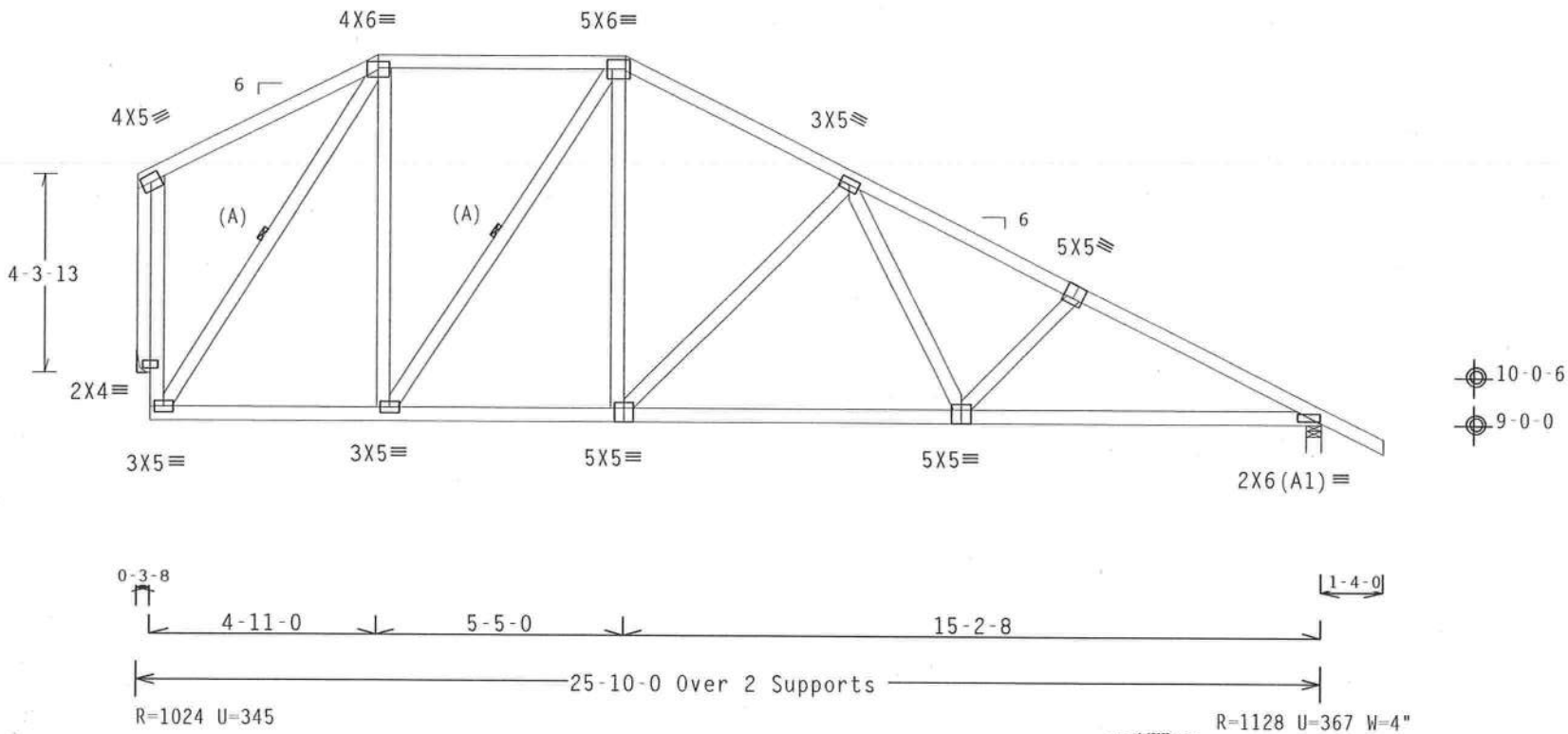

PLT TYP. Wave TPI\R Design Crit: TPI-1995(STD) 7.1

FL/-/5/-/-/R/- Scale =.25"/Ft.

TC LL	20.0 PSF	REF R215-- 90450
TC DL	10.0 PSF	DATE 04/04/05
BC DL	10.0 PSF	DRW HCUSR215 05094036
BC LL	0.0 PSF	HC-ENG EC/AP
TOT.LD.	40.0 PSF	SEQN- 130813
DUR.FAC.	1.25	FROM CDM
SPACING	24.0"	JREF- 1SLV215_Z07

ALPINE

Alpine Engineered Products, Inc.
1950 Marley Drive
Haines City, FL 33844
FL Certificate of Authorization # 567

WARNING TRUSSES REQUIRE EXTREME CARE IN FABRICATION, HANDLING, SHIPPING, INSTALLING AND BRACING. REFER TO BCSI 1-03 (BUILDING COMPONENT SAFETY INFORMATION), PUBLISHED BY TPI (TRUSS PLATE INSTITUTE, 583 D'ONOFRIO DR., SUITE 200, MADISON, WI 53719) AND WTCA (WOOD TRUSS COUNCIL OF AMERICA, 6300 ENTERPRISE LN, MADISON, WI 53719) FOR SAFETY PRACTICES PRIOR TO PERFORMING THESE FUNCTIONS. UNLESS OTHERWISE INDICATED, TOP CHORD SHALL HAVE PROPERLY ATTACHED STRUCTURAL PANELS AND BOTTOM CHORD SHALL HAVE A PROPERLY ATTACHED RIGID CEILING.

IMPORTANT FURNISH A COPY OF THIS DESIGN TO THE INSTALLATION CONTRACTOR. ALPINE ENGINEERED PRODUCTS, INC. SHALL NOT BE RESPONSIBLE FOR ANY DEVIATION FROM THIS DESIGN; ANY FAILURE TO BUILD THE TRUSS IN CONFORMANCE WITH TPI; OR FABRICATING, HANDLING, SHIPPING, INSTALLING & BRACING OF TRUSSES. DESIGN CONFORMS WITH APPLICABLE PROVISIONS OF NDS (NATIONAL DESIGN SPEC. BY AF&PA) AND TPI. ALPINE CONNECTOR PLATES ARE MADE OF 20/18/16GA (W,H/S/K) ASTM A653 GRADE 40/60 (W. K/H.S) GALV. STEEL. APPLY PLATES TO EACH FACE OF TRUSS AND, UNLESS OTHERWISE LOCATED ON THIS DESIGN, POSITION PER DRAWINGS 160A-Z. ANY INSPECTION OF PLATES FOLLOWED BY (I) SHALL BE PER ANNEX A3 OF TPI1-2002 SEC.3. A SEAL ON THIS DRAWING INDICATES ACCEPTANCE OF PROFESSIONAL ENGINEERING RESPONSIBILITY SOLELY FOR THE TRUSS COMPONENT DESIGN SHOWN. THE SUITABILITY AND USE OF THIS COMPONENT FOR ANY BUILDING IS THE RESPONSIBILITY OF THE BUILDING DESIGNER PER ANSI/TPI 1 SEC. 2.

JAMES F. COLLINS CERTIFICATE No. 0052212 STATE OF FLORIDA PROFESSIONAL ENGINEER

Apr 04 '05

Top chord 2x4 SP #2 N
Bot chord 2x4 SP #2 N
Webs 2x4 SP #2 N
:Lt Bearing Leg 2x4 SP #2 N:

In lieu of structural panels use purlins to brace all flat TC @ 24" OC.

Plates sized for a minimum of 3.00 sq.in./piece.

110 mph wind, 30.00 ft mean hgt, ASCE 7-98, CLOSED bldg, not located within 4.50 ft from roof edge, CAT II, EXP B, wind TC DL=5.0 psf, wind BC DL=5.0 psf.

Deflection meets L/240 live and L/180 total load.

The overall height of this truss excluding overhang is 5-5-1.

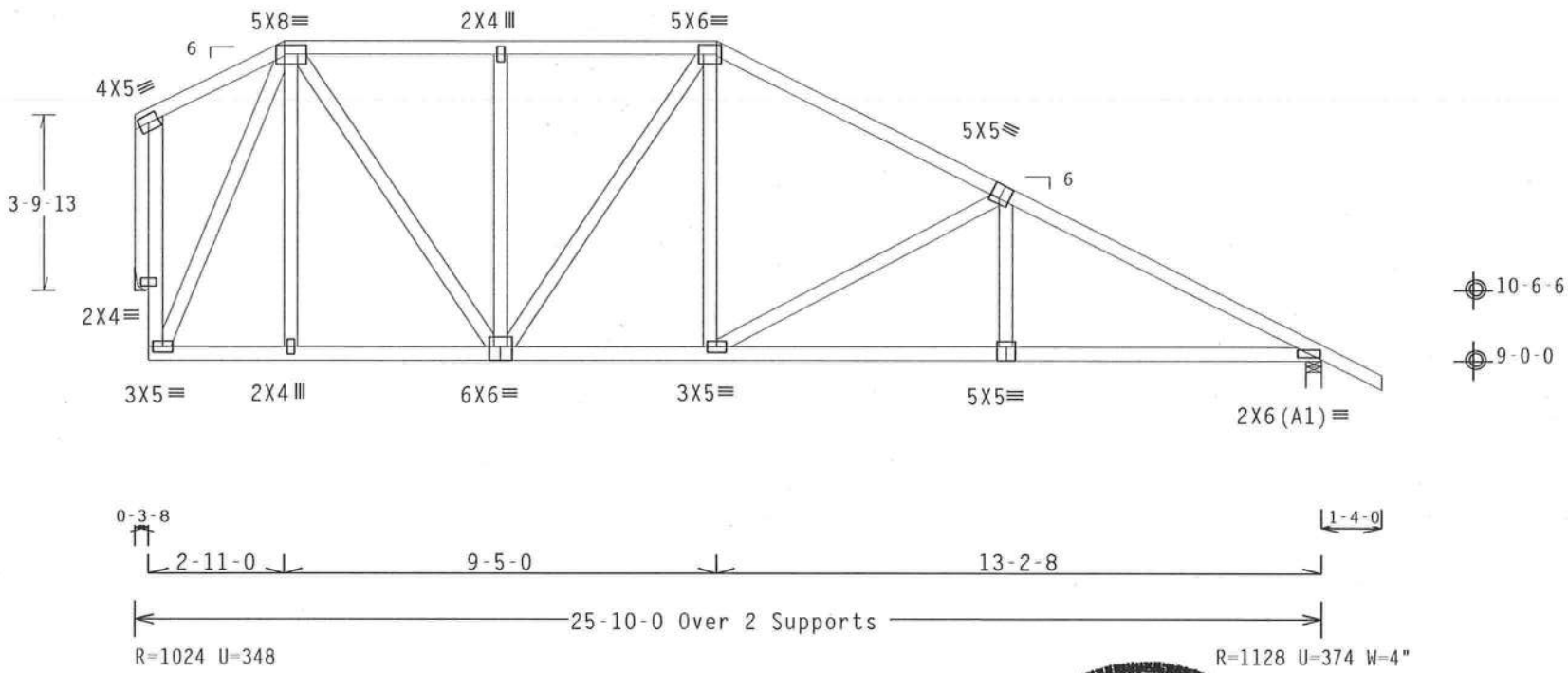

PLT TYP. Wave TPI\R Design Crit: TPI-1995(STD) 7.[illegible]1-16.20 FL/-/5/-/-/R/- Scale =.25"/Ft.

ALPINE
Alpine Engineered Products, Inc.
1950 Marley Drive
Haines City, FL 33844
FL Certificate of Authorization # 567

WARNING TRUSSES REQUIRE EXTREME CARE IN FABRICATION, HANDLING, SHIPPING, INSTALLING AND BRACING. REFER TO BCSI 1-03 (BUILDING COMPONENT SAFETY INFORMATION), PUBLISHED BY TPI (TRUSS PLATE INSTITUTE, 583 D'ONOFRIO DR., SUITE 200, MADISON, WI 53719) AND WTCA (WOOD TRUSS COUNCIL OF AMERICA, 6300 ENTERPRISE LN MADISON, WI 53719) FOR SAFETY PRACTICES PRIOR TO PERFORMING THESE FUNCTIONS. UNLESS OTHERWISE INDICATED TOP CHORD SHALL HAVE PROPERLY ATTACHED STRUCTURAL PANELS AND BOTTOM CHORD SHALL HAVE A PROPERLY ATTACHED RIGID CEILING.

IMPORTANT FURNISH A COPY OF THIS DESIGN TO THE INSTALLATION CONTRACTOR. ALPINE ENGINEERED PRODUCTS, INC. SHALL NOT BE RESPONSIBLE FOR ANY DEVIATION FROM THIS DESIGN; ANY FAILURE TO BUILD THE TRUSS IN CONFORMANCE WITH TPI; OR FABRICATING, HANDLING, SHIPPING, INSTALLING & BRACING OF TRUSSES. DESIGN CONFORMS WITH APPLICABLE PROVISIONS OF NDS (NATIONAL DESIGN SPEC. BY AF&PA) AND TPI. ALPINE CONNECTOR PLATES ARE MADE OF 20/18/16GA (W,H/S/K) ASTM A653 GRADE 40/60 (W, K/H,S) GALV. STEEL. APPLY PLATES TO EACH FACE OF TRUSS AND, UNLESS OTHERWISE LOCATED ON THIS DESIGN, POSITION PER DRAWINGS 160A-Z. ANY INSPECTION OF PLATES FOLLOWED BY (1) SHALL BE PER ANNEX A3 OF TPI1-2002 SEC.3. A SEAL ON THIS DRAWING INDICATES ACCEPTANCE OF PROFESSIONAL ENGINEERING RESPONSIBILITY SOLELY FOR THE TRUSS COMPONENT DESIGN SHOWN. THE SUITABILITY AND USE OF THIS COMPONENT FOR ANY BUILDING IS THE RESPONSIBILITY OF THE BUILDING DESIGNER PER ANSI/TPI 1 SEC. 2.

JAMES F. COLLINS, JR. CERTIFICATE No. 0052212 STATE OF FLORIDA PROFESSIONAL ENGINEER

Apr 04 '05

TC LL	20.0 PSF	REF R215-- 90451
TC DL	10.0 PSF	DATE 04/04/05
BC DL	10.0 PSF	DRW HCUSR215 05094037
BC LL	0.0 PSF	HC-ENG EC/AP
TOT.LD.	40.0 PSF	SEQN- 130820
DUR.FAC.	1.25	FROM CDM
SPACING	24.0"	JREF- 1SLV215_Z07

Top chord 2x4 SP #2 N
Bot chord 2x4 SP #2 N
Webs 2x4 SP #2 N
:Lt Bearing Leg 2x4 SP #2 N:

(A) Continuous lateral bracing equally spaced on member.

In lieu of structural panels use purlins to brace all flat TC @ 24" OC.

The overall height of this truss excluding overhang is 3-11-1.

110 mph wind, 30.00 ft mean hgt, ASCE 7-98, CLOSED bldg, not located within 4.50 ft from roof edge, CAT II, EXP B, wind TC DL=5.0 psf, wind BC DL=5.0 psf.

Deflection meets L/240 live and L/180 total load.

Plates sized for a minimum of 3.00 sq.in./piece.

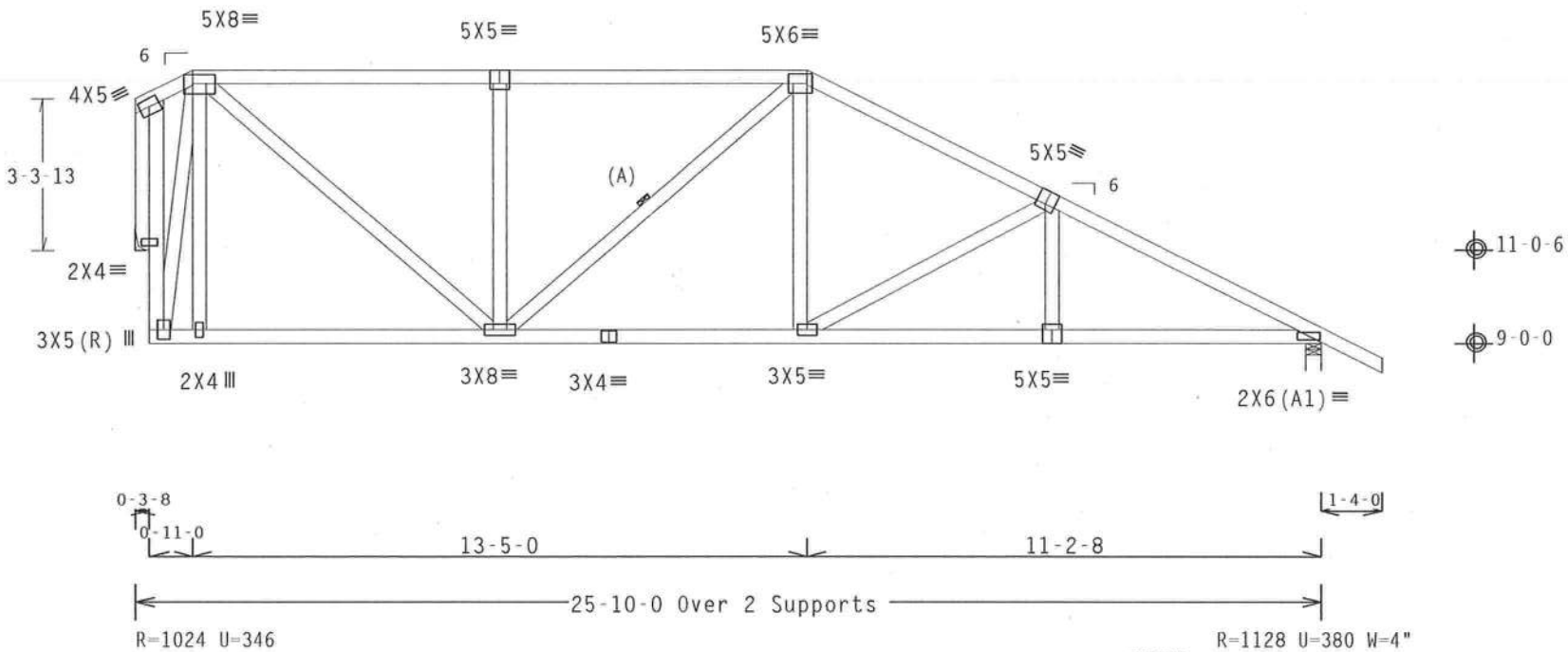

PLT TYP. Wave TPI\R Design Crit: TPI-1995(STD) 7.11.0.16.0 FL/-/5/-/-/R/- Scale =.25"/Ft.

ALPINE
Alpine Engineered Products, Inc.
1950 Marley Drive
Haines City, FL 33844
FL Certificate of Authorization # 567

WARNING TRUSSES REQUIRE EXTREME CARE IN FABRICATION, HANDLING, SHIPPING, INSTALLING AND BRACING. REFER TO BCSI 1-03 (BUILDING COMPONENT SAFETY INFORMATION), PUBLISHED BY TPI (TRUSS PLATE INSTITUTE, 583 D'ONOFRIO DR., SUITE 200, MADISON, WI 53719) AND WTCA (WOOD TRUSS COUNCIL OF AMERICA, 6300 ENTERPRISE LN, MADISON, WI 53719) FOR SAFETY PRACTICES PRIOR TO PERFORMING THESE FUNCTIONS. UNLESS OTHERWISE INDICATED, TOP CHORD SHALL HAVE PROPERLY ATTACHED STRUCTURAL PANELS AND BOTTOM CHORD SHALL HAVE A PROPERLY ATTACHED RIGID CEILING.

IMPORTANT FURNISH A COPY OF THIS DESIGN TO THE INSTALLATION CONTRACTOR. ALPINE ENGINEERED PRODUCTS, INC. SHALL NOT BE RESPONSIBLE FOR ANY DEVIATION FROM THIS DESIGN; ANY FAILURE TO BUILD THE TRUSS IN CONFORMANCE WITH TPI; OR FABRICATING, HANDLING, SHIPPING, INSTALLING & BRACING OF TRUSSES. DESIGN CONFORMS WITH APPLICABLE PROVISIONS OF NDS (NATIONAL DESIGN SPEC, BY AF&PA) AND TPI. ALPINE CONNECTOR PLATES ARE MADE OF 20/18/16GA (W,H/S/K) ASTM A653 GRADE 40/60 (W, K/H,S) GALV. STEEL. APPLY PLATES TO EACH FACE OF TRUSS AND, UNLESS OTHERWISE LOCATED ON THIS DESIGN, POSITION PER DRAWINGS 160A-Z. ANY INSPECTION OF PLATES FOLLOWED BY (1) SHALL BE PER ANNEX A3 OF TPI1-2002 SEC.3. A SEAL ON THIS DRAWING INDICATES ACCEPTANCE OF PROFESSIONAL ENGINEERING RESPONSIBILITY SOLELY FOR THE TRUSS COMPONENT DESIGN SHOWN. THE SUITABILITY AND USE OF THIS COMPONENT FOR ANY BUILDING IS THE RESPONSIBILITY OF THE BUILDING DESIGNER PER ANSI/TPI 1 SEC. 2.

JAMES F. COLLINS CERTIFICATE No. 0052212 STATE OF FLORIDA PROFESSIONAL ENGINEER
Apr 04 '05

TC LL	20.0 PSF	REF R215-- 90452
TC DL	10.0 PSF	DATE 04/04/05
BC DL	10.0 PSF	DRW HCUSR215 05094038
BC LL	0.0 PSF	HC-ENG EC/AP
TOT.LD.	40.0 PSF	SEQN- 130827
DUR.FAC.	1.25	FROM CDM
SPACING	24.0"	JREF- 1SLV215_Z07

Top chord 2x4 SP #2 N
Bot chord 2x4 SP #2 N
Webs 2x4 SP #2 N
:Lt Bearing Leg 2x4 SP #2 N:

In lieu of structural panels use purlins to brace all flat TC @ 24" OC.

Plates sized for a minimum of 3.00 sq.in./piece.

110 mph wind, 30.00 ft mean hgt, ASCE 7-98, CLOSED bldg, not located within 4.50 ft from roof edge, CAT II, EXP B, wind TC DL=5.0 psf, wind BC DL=5.0 psf.

Deflection meets L/240 live and L/180 total load.

The overall height of this truss excluding overhang is 3-0-3.

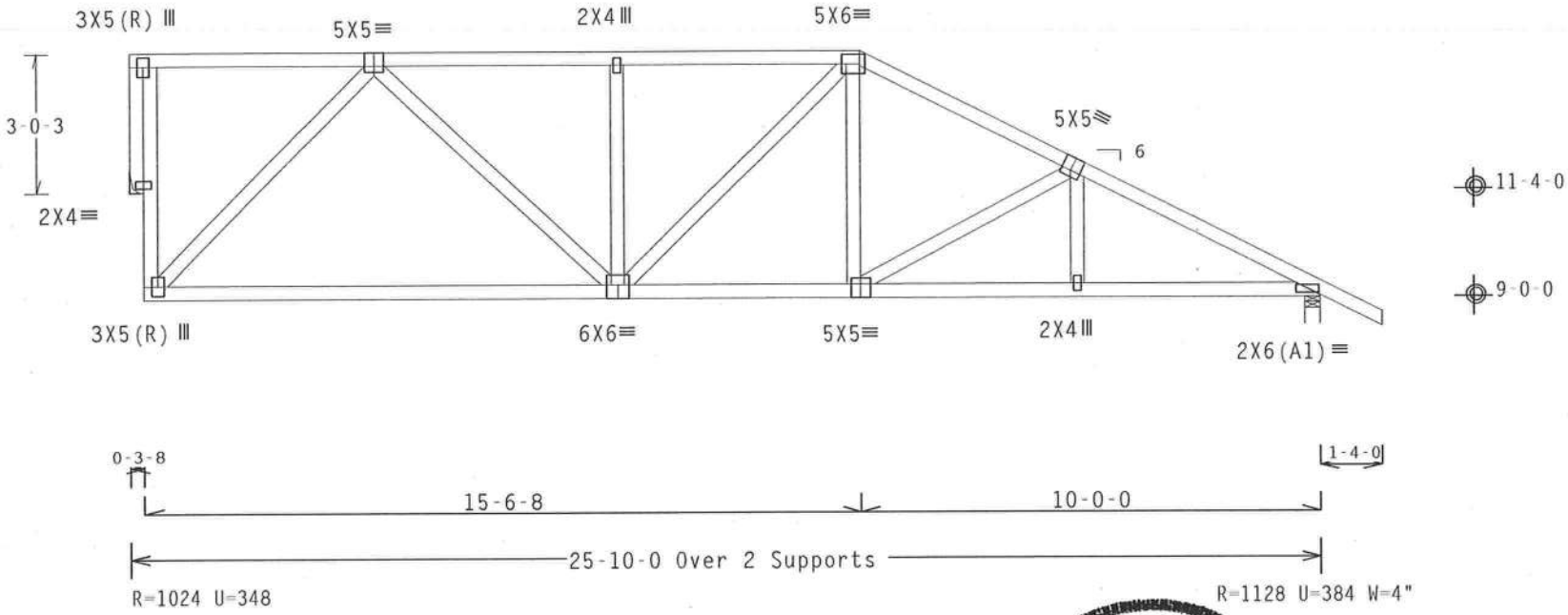

PLT TYP. Wave TPI\R

Design Crit: TPI-1995(STD)

7.1 Mar 20

FL/-/5/-/-/R/-

Scale =.25"/Ft.

ALPINE

Alpine Engineered Products, Inc.
1950 Marley Drive
Haines City, FL 33844
FL Certificate of Authorization # 567

WARNING TRUSSES REQUIRE EXTREME CARE IN FABRICATION, HANDLING, SHIPPING, INSTALLING AND BRACING. REFER TO BCSI 1-03 (BUILDING COMPONENT SAFETY INFORMATION), PUBLISHED BY TPI (TRUSS PLATE INSTITUTE, 583 D'ONOFRIO DR., SUITE 200, MADISON, WI 53719) AND WTCA (WOOD TRUSS COUNCIL OF AMERICA, 6300 ENTERPRISE LN., MADISON, WI 53719) FOR SAFETY PRACTICES PRIOR TO PERFORMING THESE FUNCTIONS. UNLESS OTHERWISE INDICATED, TOP CHORD SHALL HAVE PROPERLY ATTACHED STRUCTURAL PANELS AND BOTTOM CHORD SHALL HAVE A PROPERLY ATTACHED RIGID CEILING.

IMPORTANT FURNISH A COPY OF THIS DESIGN TO THE INSTALLATION CONTRACTOR. ALPINE ENGINEERED PRODUCTS, INC. SHALL NOT BE RESPONSIBLE FOR ANY DEVIATION FROM THIS DESIGN; ANY FAILURE TO BUILD THE TRUSS IN CONFORMANCE WITH TPI; OR FABRICATING, HANDLING, SHIPPING, INSTALLING & BRACING OF TRUSSES. DESIGN CONFORMS WITH APPLICABLE PROVISIONS OF NDS (NATIONAL DESIGN SPEC. BY AF&PA) AND TPI. ALPINE CONNECTOR PLATES ARE MADE OF 20/18/16GA (W,H/S/K) ASTM A653 GRADE 40/60 (W, K/H,S) GALV. STEEL. APPLY PLATES TO EACH FACE OF TRUSS AND, UNLESS OTHERWISE LOCATED ON THIS DESIGN, POSITION PER DRAWINGS 160A-Z. ANY INSPECTION OF PLATES FOLLOWED BY (1) SHALL BE PER ANNEX A3 OF TPI1-2002 SEC.3. A SEAL ON THIS DRAWING INDICATES ACCEPTANCE OF PROFESSIONAL ENGINEERING RESPONSIBILITY SOLELY FOR THE TRUSS COMPONENT DESIGN SHOWN. THE SUITABILITY AND USE OF THIS COMPONENT FOR ANY BUILDING IS THE RESPONSIBILITY OF THE BUILDING DESIGNER PER ANSI/TPI 1 SEC. 2.

JAMES F. COLLINS, JR. CERTIFICATE No. 0052212 STATE OF FLORIDA PROFESSIONAL ENGINEER

Apr 04 '05

TC LL	20.0 PSF	REF R215-- 90453
TC DL	10.0 PSF	DATE 04/04/05
BC DL	10.0 PSF	DRW HCUSR215 05094039
BC LL	0.0 PSF	HC-ENG EC/AP
TOT.LD.	40.0 PSF	SEQN- 130835
DUR.FAC.	1.25	FROM CDM
SPACING	24.0"	JREF- 1SLV215_Z07

Top chord 2x4 SP #2 N
Bot chord 2x6 SP #2 N
Webs 2x4 SP #2 N

SPECIAL LOADS
------(LUMBER DUR.FAC.=1.25 / PLATE DUR.FAC.=1.25)
TC - From 60 PLF at 0.00 to 60 PLF at 12.67
BC - From 20 PLF at 0.00 to 20 PLF at 12.67
BC - 1134 LB Conc. Load at 2.06, 4.06, 6.06, 8.06, 10.06
12.06

Deflection meets L/240 live and L/180 total load.

Plates sized for a minimum of 3.00 sq.in./piece.

2 COMPLETE TRUSSES REQUIRED

Nailing Schedule: (0.131x3.0_g_nails)
Top Chord: 1 Row @ 12" o.c.
Bot Chord: 2 Rows @ 6" o.c. (Each Row)
Webs : 1 Row @ 4" o.c.
Use equal spacing between rows and stagger nails in each row to avoid splitting.

110 mph wind, 15.00 ft mean hgt, ASCE 7-98, CLOSED bldg, Located anywhere in roof, CAT II, EXP B, wind TC DL=5.0 psf, wind BC DL=5.0 psf.

The overall height of this truss excluding overhang is 3-6-3.

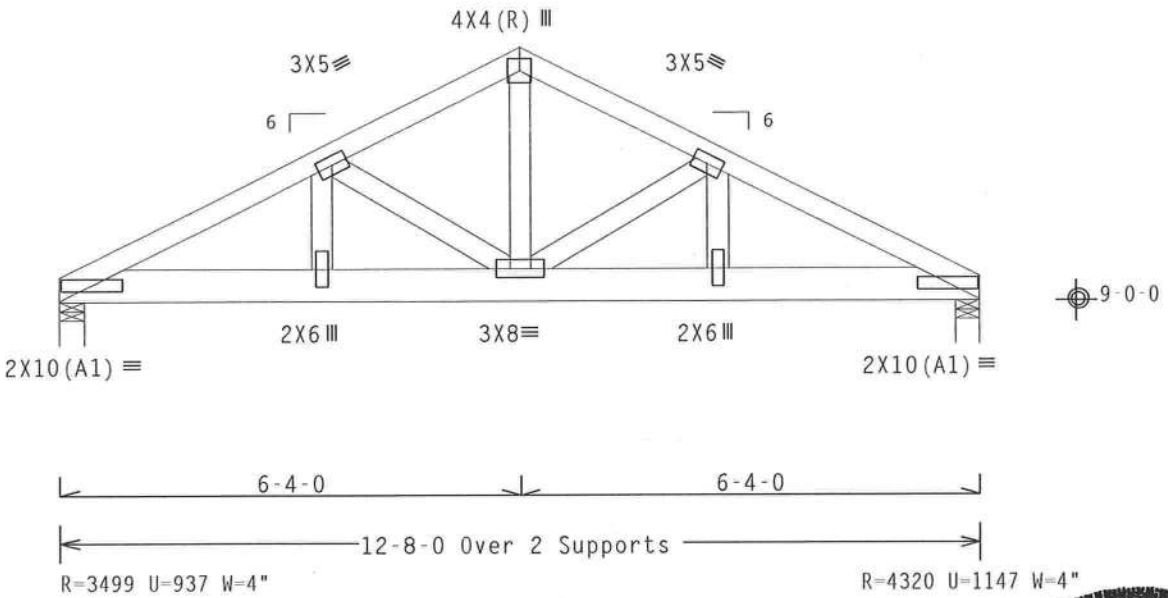

PLT TYP. Wave TPI\R | Design Crit: TPI-1995(STD) | 7.1 | FL/-/5/-/-/R/- | Scale =.375"/Ft.

ALPINE
Alpine Engineered Products, Inc.
1950 Marley Drive
Haines City, FL 33844
FL Certificate of Authorization # 567

WARNING TRUSSES REQUIRE EXTREME CARE IN FABRICATION, HANDLING, SHIPPING, INSTALLING AND BRACING. REFER TO BCSI 1-03 (BUILDING COMPONENT SAFETY INFORMATION), PUBLISHED BY TPI (TRUSS PLATE INSTITUTE, 583 D'ONOFRIO DR., SUITE 200, MADISON, WI 53719) AND WTCA (WOOD TRUSS COUNCIL OF AMERICA, 6300 ENTERPRISE LN, MADISON, WI 53719) FOR SAFETY PRACTICES PRIOR TO PERFORMING THESE FUNCTIONS. UNLESS OTHERWISE INDICATED, TOP CHORD SHALL HAVE PROPERLY ATTACHED STRUCTURAL PANELS AND BOTTOM CHORD SHALL HAVE A PROPERLY ATTACHED RIGID CEILING.

IMPORTANT FURNISH A COPY OF THIS DESIGN TO THE INSTALLATION CONTRACTOR. ALPINE ENGINEERED PRODUCTS, INC. SHALL NOT BE RESPONSIBLE FOR ANY DEVIATION FROM THIS DESIGN; ANY FAILURE TO BUILD THE TRUSS IN CONFORMANCE WITH TPI; OR FABRICATING, HANDLING, SHIPPING, INSTALLING & BRACING OF TRUSSES. DESIGN CONFORMS WITH APPLICABLE PROVISIONS OF NDS (NATIONAL DESIGN SPEC, BY AF&PA) AND TPI. ALPINE CONNECTOR PLATES ARE MADE OF 20/18/16GA (W,H/S/K) ASTM A653 GRADE 40/60 (W, K/H,S) GALV. STEEL. APPLY PLATES TO EACH FACE OF TRUSS AND, UNLESS OTHERWISE LOCATED ON THIS DESIGN, POSITION PER DRAWINGS 160A-Z. ANY INSPECTION OF PLATES FOLLOWED BY (1) SHALL BE PER ANNEX A3 OF TPI1-2002 SEC.3. A SEAL ON THIS DRAWING INDICATES ACCEPTANCE OF PROFESSIONAL ENGINEERING RESPONSIBILITY SOLELY FOR THE TRUSS COMPONENT DESIGN SHOWN. THE SUITABILITY AND USE OF THIS COMPONENT FOR ANY BUILDING IS THE RESPONSIBILITY OF THE BUILDING DESIGNER PER ANSI/TPI 1 SEC. 2.

JAMES F. COLLINS, JR. CERTIFICATE No. 0052212 STATE OF FLORIDA PROFESSIONAL ENGINEER

Apr 04 '05

TC LL	20.0 PSF	REF	R215-- 90454
TC DL	10.0 PSF	DATE	04/04/05
BC DL	10.0 PSF	DRW	HCUSR215 05094040
BC LL	0.0 PSF	HC-ENG	EC/AP
TOT.LD.	40.0 PSF	SEQN-	130757
DUR.FAC.	1.25	FROM	CDM
SPACING	24.0"	JREF-	1SLV215_Z07

Top chord 2x4 SP #2 N :T5 2x4 SP SS:
Bot chord 2x6 SP #2 N :B2 2x6 SP SS:
Webs 2x4 SP #2 N

SPECIAL LOADS
------(LUMBER DUR.FAC.=1.25 / PLATE DUR.FAC.=1.25)
TC - From 60 PLF at -1.33 to 60 PLF at 39.00
BC - From 4 PLF at -1.33 to 4 PLF at 0.00
BC - From 20 PLF at 0.00 to 20 PLF at 39.00
PLB- 1024 LB Conc. Load at (5.40,9.06)
PLB- 1024 LB Conc. Load at (7.40,9.56)
PLB- 1024 LB Conc. Load at (9.40,10.06)
PLB- 1024 LB Conc. Load at (11.40,10.56)
PLB- 1024 LB Conc. Load at (13.40,11.06)
PLB- 1024 LB Conc. Load at (14.60,11.36)
PLB- 1825 LB Conc. Load at (16.60,11.86)

(A) scab brace. 80% length of web member. Same size, species & grade or better. Attach with 10d Box or Gun (0.128"x3",min.)nails @ 6" OC.

Plates sized for a minimum of 3.00 sq.in./piece.

2 COMPLETE TRUSSES REQUIRED

Nailing Schedule: (0.131x3.0_g_nails)
Top Chord: 1 Row @ 12" o.c.
Bot Chord: 1 Row @ 12" o.c.
Webs : 1 Row @ 4" o.c.
Use equal spacing between rows and stagger nails in each row to avoid splitting.

Bearing blocks: Nail type: 0.131x3.0_g_nails

BRG	X-LOC	#BLOCKS	LENGTH/BLK	#NAILS/BLK	WALL PLATE
1	5.000'	1	12"	14	Match Truss

Bearing block to be same size and species as bottom chord.
Refer to drawing CNBRGBLK0503 for additional information.

110 mph wind, 15.00 ft mean hgt, ASCE 7-98, CLOSED bldg, not located within 4.50 ft from roof edge, CAT II, EXP B, wind TC DL=5.0 psf, wind BC DL=5.0 psf.

Deflection meets L/240 live and L/180 total load.

The overall height of this truss excluding overhang is 9-9-4.

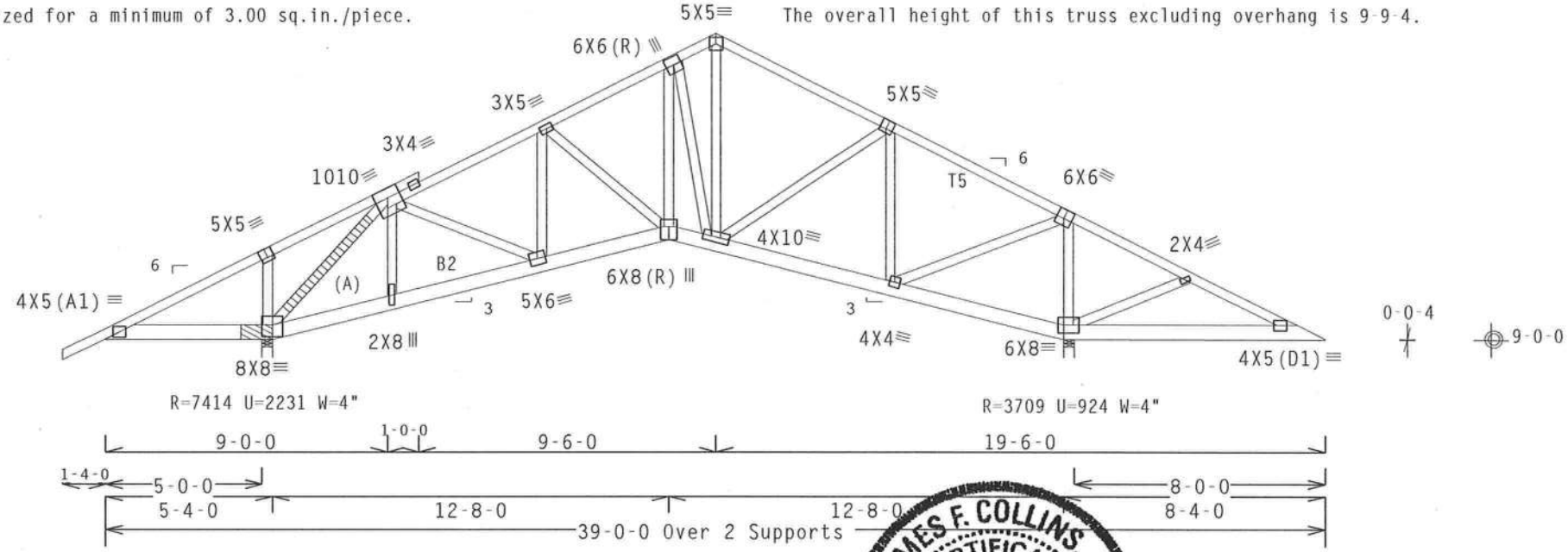

PLT TYP. Wave TPI\R Design Crit: TPI-1995(STD) 7.1[illegible] FL/-/5/-/-/R/- Scale =.1875"/Ft.

ALPINE
Alpine Engineered Products, Inc.
1950 Marley Drive
Haines City, FL 33844
FL Certificate of Authorization # 567

WARNING TRUSSES REQUIRE EXTREME CARE IN FABRICATION, HANDLING, SHIPPING, INSTALLING AND BRACING. REFER TO BCSI 1-03 (BUILDING COMPONENT SAFETY INFORMATION), PUBLISHED BY TPI (TRUSS PLATE INSTITUTE, 583 D'ONOFRIO DR., SUITE 200, MADISON, WI 53719) AND WTCA (WOOD TRUSS COUNCIL OF AMERICA, 6300 ENTERPRISE LN, MADISON, WI 53719) FOR SAFETY PRACTICES PRIOR TO PERFORMING THESE FUNCTIONS. UNLESS OTHERWISE INDICATED, TOP CHORD SHALL HAVE PROPERLY ATTACHED STRUCTURAL PANELS AND BOTTOM CHORD SHALL HAVE A PROPERLY ATTACHED RIGID CEILING.

IMPORTANT FURNISH A COPY OF THIS DESIGN TO THE INSTALLATION CONTRACTOR. ALPINE ENGINEERED PRODUCTS, INC. SHALL NOT BE RESPONSIBLE FOR ANY DEVIATION FROM THIS DESIGN; ANY FAILURE TO BUILD THE TRUSS IN CONFORMANCE WITH TPI; OR FABRICATING, HANDLING, SHIPPING, INSTALLING & BRACING OF TRUSSES. DESIGN CONFORMS WITH APPLICABLE PROVISIONS OF NDS (NATIONAL DESIGN SPEC. BY AF&PA) AND TPI. ALPINE CONNECTOR PLATES ARE MADE OF 20/18/16GA (W,H/S/K) ASTM A653 GRADE 40/60 (W, K/H,S) GALV. STEEL. APPLY PLATES TO EACH FACE OF TRUSS AND, UNLESS OTHERWISE LOCATED ON THIS DESIGN, POSITION PER DRAWINGS 160A-Z. ANY INSPECTION OF PLATES FOLLOWED BY (1) SHALL BE PER ANNEX A3 OF TPI1-2002 SEC.3. A SEAL ON THIS DRAWING INDICATES ACCEPTANCE OF PROFESSIONAL ENGINEERING RESPONSIBILITY SOLELY FOR THE TRUSS COMPONENT DESIGN SHOWN. THE SUITABILITY AND USE OF THIS COMPONENT FOR ANY BUILDING IS THE RESPONSIBILITY OF THE BUILDING DESIGNER PER ANSI/TPI 1 SEC. 2.

JAMES F. COLLINS CERTIFICATE No. 0052212 STATE OF FLORIDA PROFESSIONAL ENGINEER
Apr 04 '05

TC LL	20.0 PSF	REF R215-- 90455
TC DL	10.0 PSF	DATE 04/04/05
BC DL	10.0 PSF	DRW HCUSR215 05094041
BC LL	0.0 PSF	HC-ENG EC/AP
TOT.LD.	40.0 PSF	SEQN- 43073
DUR.FAC.	1.25	FROM CDM
SPACING	24.0"	JREF- 1SLV215_Z07

Top chord 2x6 SP #2 N :T2 2x4 SP #2 N:
Bot chord 2x6 SP SS :B2 2x6 SP #2 N:
Webs 2x4 SP #2 N :W1 2x4 SP SS:
:Lt Bearing Leg 2x4 SP #2 N:

SPECIAL LOADS
------(LUMBER DUR.FAC.=1.25 / PLATE DUR.FAC.=1.25)
TC - From 60 PLF at 0.00 to 60 PLF at 27.17
BC - From 20 PLF at 0.00 to 20 PLF at 25.83
BC - From 4 PLF at 25.83 to 4 PLF at 27.17
BC - 297 LB Conc. Load at 0.56, 2.56, 4.56, 5.77, 7.77
BC - 1206 LB Conc. Load at 9.77

Deflection meets L/240 live and L/180 total load.

The overall height of this truss excluding overhang is 1-6-3.

110 mph wind, 15.00 ft mean hgt, ASCE 7-98, CLOSED bldg, not located within 4.50 ft from roof edge, CAT II, EXP B, wind TC DL=5.0 psf, wind BC DL=5.0 psf.

Max JT VERT DEFL: LL: 0.14" DL: 0.14" recommended camber 1/4"

(J) hanger connection not found in inventory file for this condition. Provide connection.

(A) Continuous lateral bracing equally spaced on member.

In lieu of structural panels use purlins to brace all flat TC @ 24" OC.

Plates sized for a minimum of 3.00 sq.in./piece.

IT IS THE RESPONSIBILITY OF THE BUILDING DESIGNER TO VERIFY AND APPROVE THE LOADING.

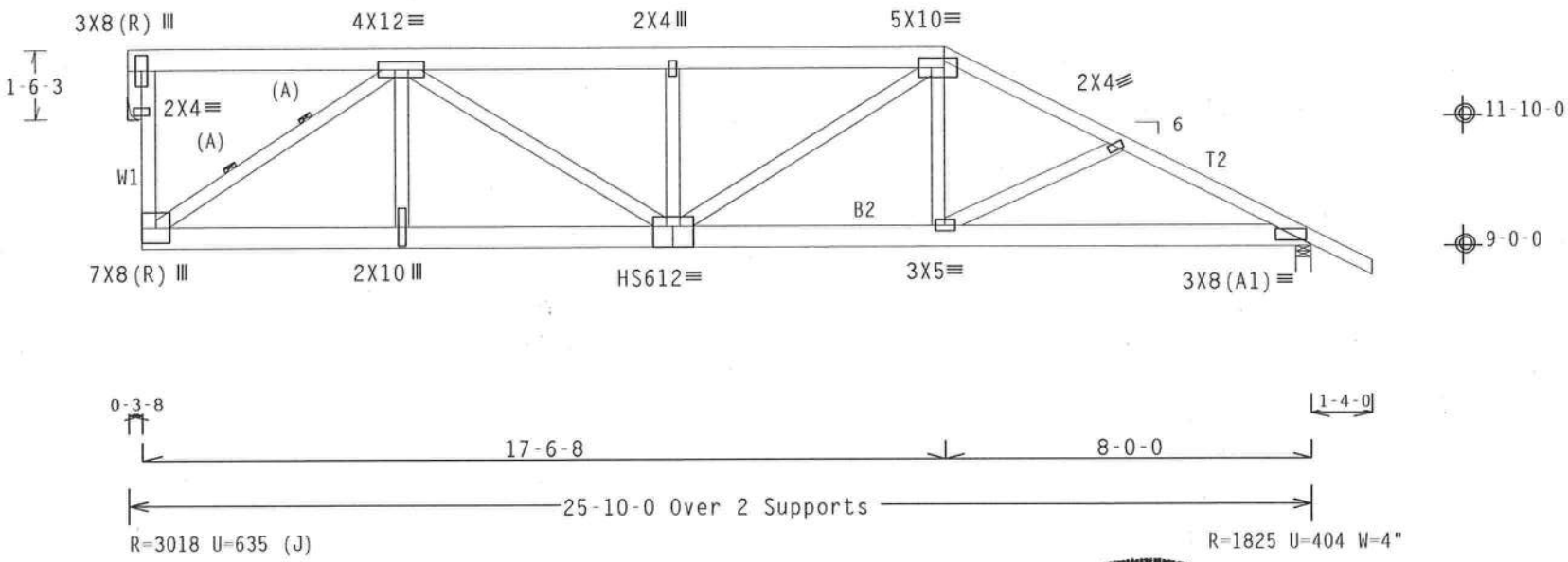

PLT TYP. 20 Gauge HS,Wave TPI\R Design Crit: TPI-1995(STD) 7.1 QTY: 1 FL/-/5/-/-/R/- Scale =.25"/Ft.

ALPINE
Alpine Engineered Products, Inc.
1950 Marley Drive
Haines City, FL 33844
FL Certificate of Authorization # 567

WARNING TRUSSES REQUIRE EXTREME CARE IN FABRICATION, HANDLING, SHIPPING, INSTALLING AND BRACING. REFER TO BCSI 1-03 (BUILDING COMPONENT SAFETY INFORMATION), PUBLISHED BY TPI (TRUSS PLATE INSTITUTE, 583 D'ONOFRIO DR., SUITE 200, MADISON, WI 53719) AND WTCA (WOOD TRUSS COUNCIL OF AMERICA, 6300 ENTERPRISE LN, MADISON, WI 53719) FOR SAFETY PRACTICES PRIOR TO PERFORMING THESE FUNCTIONS. UNLESS OTHERWISE INDICATED, TOP CHORD SHALL HAVE PROPERLY ATTACHED STRUCTURAL PANELS AND BOTTOM CHORD SHALL HAVE A PROPERLY ATTACHED RIGID CEILING.

IMPORTANT FURNISH A COPY OF THIS DESIGN TO THE INSTALLATION CONTRACTOR. ALPINE ENGINEERED PRODUCTS, INC. SHALL NOT BE RESPONSIBLE FOR ANY DEVIATION FROM THIS DESIGN; ANY FAILURE TO BUILD THE TRUSS IN CONFORMANCE WITH TPI; OR FABRICATING, HANDLING, SHIPPING, INSTALLING & BRACING OF TRUSSES. DESIGN CONFORMS WITH APPLICABLE PROVISIONS OF NDS (NATIONAL DESIGN SPEC, BY AF&PA) AND TPI. ALPINE CONNECTOR PLATES ARE MADE OF 20/18/16GA (W,H/S/K) ASTM A653 GRADE 40/60 (W, K/H,S) GALV. STEEL. APPLY PLATES TO EACH FACE OF TRUSS AND, UNLESS OTHERWISE LOCATED ON THIS DESIGN, POSITION PER DRAWINGS 160A-Z. ANY INSPECTION OF PLATES FOLLOWED BY (1) SHALL BE PER ANNEX A3 OF TPI1-2002 SEC.3. A SEAL ON THIS DRAWING INDICATES ACCEPTANCE OF PROFESSIONAL ENGINEERING RESPONSIBILITY SOLELY FOR THE TRUSS COMPONENT DESIGN SHOWN. THE SUITABILITY AND USE OF THIS COMPONENT FOR ANY BUILDING IS THE RESPONSIBILITY OF THE BUILDING DESIGNER PER ANSI/TPI 1 SEC. 2.

JAMES F. COLLINS CERTIFICATE No. 0052212 STATE OF FLORIDA PROFESSIONAL ENGINEER
Apr 04 '05

TC LL	20.0 PSF	REF R215-- 90456
TC DL	10.0 PSF	DATE 04/04/05
BC DL	10.0 PSF	DRW HCUSR215 05094049
BC LL	0.0 PSF	HC-ENG EC/AP
TOT.LD.	40.0 PSF	SEQN- 42984
DUR.FAC.	1.25	FROM CDM
SPACING	24.0"	JREF- 1SLV215_Z07

Top chord 2x4 SP #2 N
Bot chord 2x4 SP #2 Dense
Webs 2x4 SP #2 N

See DWGS A11030EC1103 & GBLLETIN1103 for more requirements.

Plates sized for a minimum of 3.00 sq.in./piece.

THE BUILDING DESIGNER IS RESPONSIBLE FOR THE DESIGN OF THE ROOF AND CEILING DIAPHRAGMS, GABLE END SHEAR WALLS, AND SUPPORTING SHEAR WALLS. SHEAR WALLS MUST PROVIDE CONTINUOUS LATERAL RESTRAINT TO THE GABLE END. ALL CONNECTIONS TO BE DESIGNED BY THE BUILDING DESIGNER.

110 mph wind, 30.00 ft mean hgt, ASCE 7-98, CLOSED bldg, Located anywhere in roof, CAT II, EXP B, wind TC DL=5.0 psf, wind BC DL=5.0 psf.

Deflection meets L/240 live and L/180 total load.

The overall height of this truss excluding overhang is 4-0-4.

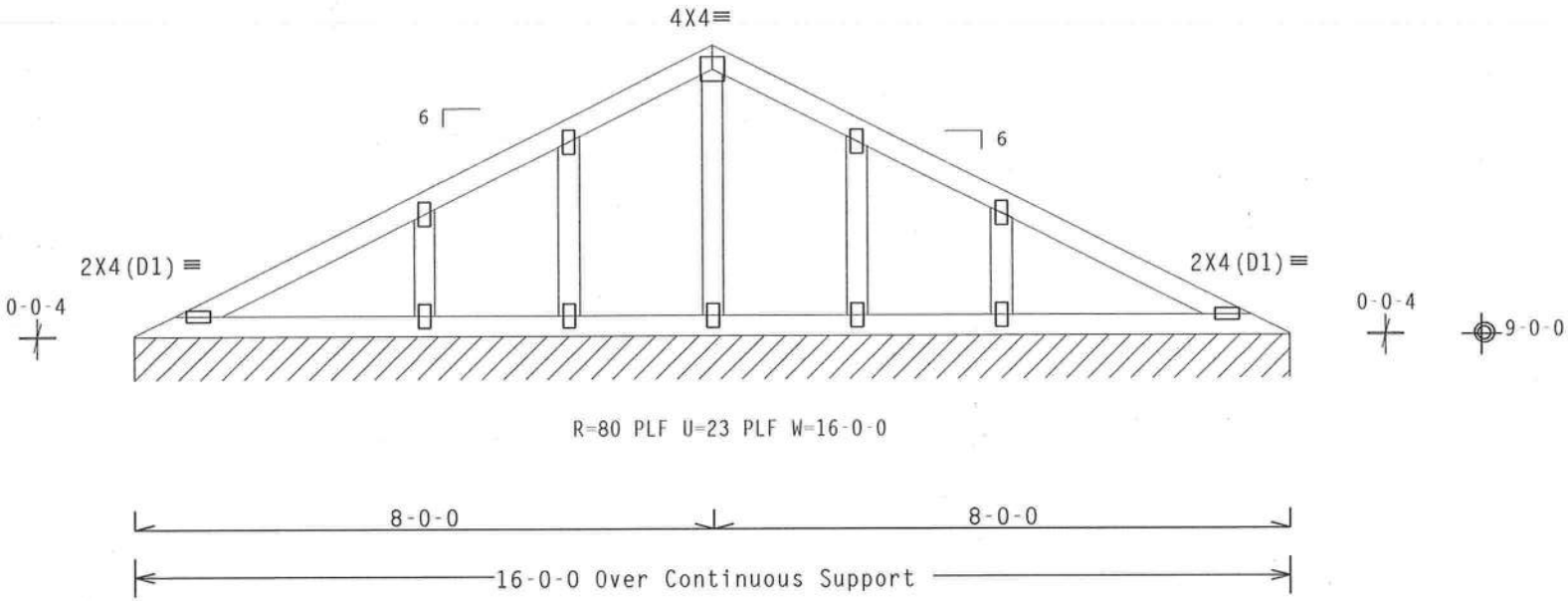

Note: All Plates Are 2X4 Except As Shown.

PLT TYP. Wave TPI\R Design Crit: TPI-1995(STD) 7.11 QTY 1 FL/-/5/-/-/R/- Scale =.375"/Ft.

ALPINE
Alpine Engineered Products, Inc.
1950 Marley Drive
Haines City, FL 33844
FL Certificate of Authorization # 567

WARNING TRUSSES REQUIRE EXTREME CARE IN FABRICATION, HANDLING, SHIPPING, INSTALLING AND BRACING. REFER TO BCSI 1-03 (BUILDING COMPONENT SAFETY INFORMATION), PUBLISHED BY TPI (TRUSS PLATE INSTITUTE, 583 D'ONOFRIO DR., SUITE 200, MADISON, WI 53719) AND WTCA (WOOD TRUSS COUNCIL OF AMERICA, 6300 ENTERPRISE LN, MADISON, WI 53719) FOR SAFETY PRACTICES PRIOR TO PERFORMING THESE FUNCTIONS. UNLESS OTHERWISE INDICATED, TOP CHORD SHALL HAVE PROPERLY ATTACHED STRUCTURAL PANELS AND BOTTOM CHORD SHALL HAVE A PROPERLY ATTACHED RIGID CEILING.

IMPORTANT FURNISH A COPY OF THIS DESIGN TO THE INSTALLATION CONTRACTOR. ALPINE ENGINEERED PRODUCTS, INC. SHALL NOT BE RESPONSIBLE FOR ANY DEVIATION FROM THIS DESIGN; ANY FAILURE TO BUILD THE TRUSS IN CONFORMANCE WITH TPI; OR FABRICATING, HANDLING, SHIPPING, INSTALLING & BRACING OF TRUSSES. DESIGN CONFORMS WITH APPLICABLE PROVISIONS OF NDS (NATIONAL DESIGN SPEC, BY AF&PA) AND TPI. ALPINE CONNECTOR PLATES ARE MADE OF 20/18/16GA (W,H/S/K) ASTM A653 GRADE 40/60 (W, K/H,S) GALV. STEEL. APPLY PLATES TO EACH FACE OF TRUSS AND, UNLESS OTHERWISE LOCATED ON THIS DESIGN, POSITION PER DRAWINGS 160A-Z. ANY INSPECTION OF PLATES FOLLOWED BY (1) SHALL BE PER ANNEX A3 OF TPI1-2002 SEC.3. A SEAL ON THIS DRAWING INDICATES ACCEPTANCE OF PROFESSIONAL ENGINEERING RESPONSIBILITY SOLELY FOR THE TRUSS COMPONENT DESIGN SHOWN. THE SUITABILITY AND USE OF THIS COMPONENT FOR ANY BUILDING IS THE RESPONSIBILITY OF THE BUILDING DESIGNER PER ANSI/TPI 1 SEC. 2.

JAMES F. COLLINS JR. CERTIFICATE No. 0052212 STATE OF FLORIDA PROFESSIONAL ENGINEER

Apr 04 '05

TC LL	20.0 PSF	REF R215-- 90457
TC DL	10.0 PSF	DATE 04/04/05
BC DL	10.0 PSF	DRW HCUSR215 05094042
BC LL	0.0 PSF	HC-ENG EC/AP
TOT.LD.	40.0 PSF	SEQN- 130726
DUR.FAC.	1.25	FROM LB
SPACING	24.0"	JREF- 1SLV215_Z07

Top chord 2x4 SP #2 N
Bot chord 2x4 SP #2 Dense
Webs 2x4 SP #2 N

See DWGS A11030EC1103 & GBLLETIN1103 for more requirements.

Plates sized for a minimum of 3.00 sq.in./piece.

THE BUILDING DESIGNER IS RESPONSIBLE FOR THE DESIGN OF THE ROOF AND CEILING DIAPHRAGMS, GABLE END SHEAR WALLS, AND SUPPORTING SHEAR WALLS. SHEAR WALLS MUST PROVIDE CONTINUOUS LATERAL RESTRAINT TO THE GABLE END. ALL CONNECTIONS TO BE DESIGNED BY THE BUILDING DESIGNER.

110 mph wind, 30.00 ft mean hgt, ASCE 7-98, CLOSED bldg, Located anywhere in roof, CAT II, EXP B, wind TC DL=5.0 psf, wind BC DL=5.0 psf.

Deflection meets L/240 live and L/180 total load.

The overall height of this truss excluding overhang is 3-2-4.

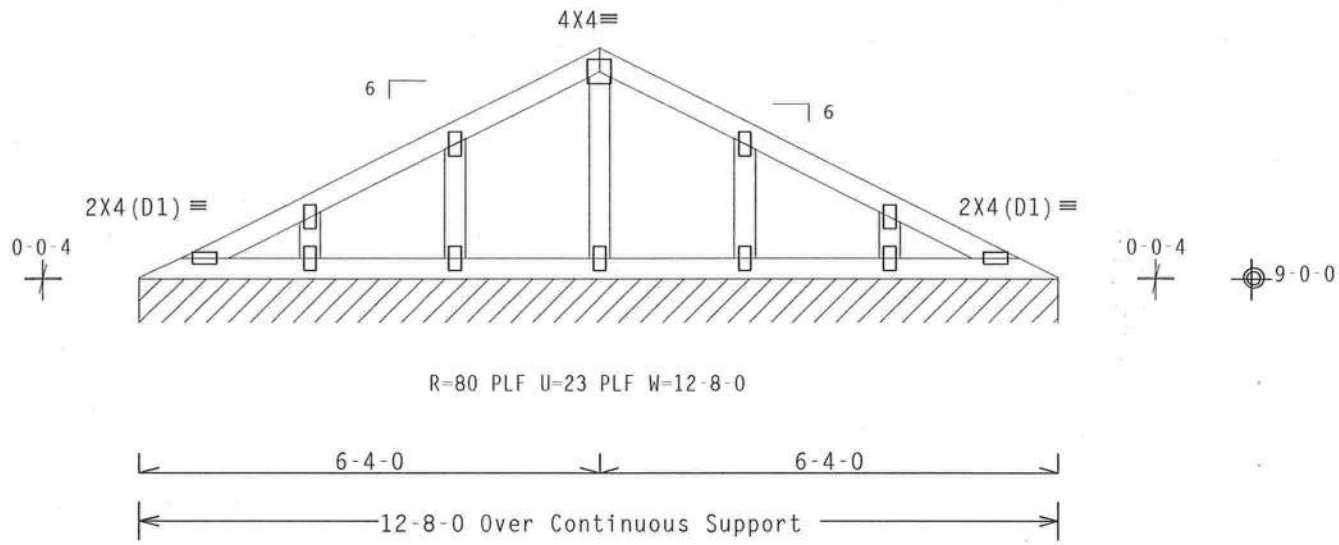

Note: All Plates Are 2X4 Except As Shown.

PLT TYP. Wave TPI\R Design Crit: TPI-1995(STD) 7.[illegible]1-10.20 [illegible] FL/-/5/-/-/R/- Scale =.375"/Ft.

ALPINE
Alpine Engineered Products, Inc.
1950 Marley Drive
Haines City, FL 33844
FL Certificate of Authorization # 567

WARNING TRUSSES REQUIRE EXTREME CARE IN FABRICATION, HANDLING, SHIPPING, INSTALLING AND BRACING. REFER TO BCSI 1-03 (BUILDING COMPONENT SAFETY INFORMATION), PUBLISHED BY TPI (TRUSS PLATE INSTITUTE, 583 D'ONOFRIO DR., SUITE 200, MADISON, WI 53719) AND WTCA (WOOD TRUSS COUNCIL OF AMERICA, 6300 ENTERPRISE LN MADISON, WI 53719) FOR SAFETY PRACTICES PRIOR TO PERFORMING THESE FUNCTIONS. UNLESS OTHERWISE INDICATED TOP CHORD SHALL HAVE PROPERLY ATTACHED STRUCTURAL PANELS AND BOTTOM CHORD SHALL HAVE A PROPERLY ATTACHED RIGID CEILING.

IMPORTANT FURNISH A COPY OF THIS DESIGN TO THE INSTALLATION CONTRACTOR. ALPINE ENGINEERED PRODUCTS, INC. SHALL NOT BE RESPONSIBLE FOR ANY DEVIATION FROM THIS DESIGN; ANY FAILURE TO BUILD THE TRUSS IN CONFORMANCE WITH TPI; OR FABRICATING, HANDLING, SHIPPING, INSTALLING & BRACING OF TRUSSES DESIGN CONFORMS WITH APPLICABLE PROVISIONS OF NDS (NATIONAL DESIGN SPEC. BY AF&PA) AND TPI. ALPINE CONNECTOR PLATES ARE MADE OF 20/18/16GA (W,H/S/K) ASTM A653 GRADE 40/60 (W, K/H,S) GALV. STEEL. APPLY PLATES TO EACH FACE OF TRUSS AND, UNLESS OTHERWISE LOCATED ON THIS DESIGN, POSITION PER DRAWINGS 160A-Z. ANY INSPECTION OF PLATES FOLLOWED BY (1) SHALL BE PER ANNEX A3 OF TPI1-2002 SEC.3. A SEAL ON THIS DRAWING INDICATES ACCEPTANCE OF PROFESSIONAL ENGINEERING RESPONSIBILITY SOLELY FOR THE TRUSS COMPONENT DESIGN SHOWN. THE SUITABILITY AND USE OF THIS COMPONENT FOR ANY BUILDING IS THE RESPONSIBILITY OF THE BUILDING DESIGNER PER ANSI/TPI 1 SEC. 2.

JAMES F. COLLINS, JR. CERTIFICATE No. 0052212 STATE OF FLORIDA PROFESSIONAL ENGINEER

Apr 04 '05

TC LL	20.0 PSF	REF R215-- 90458
TC DL	10.0 PSF	DATE 04/04/05
BC DL	10.0 PSF	DRW HCUSR215 05094043
BC LL	0.0 PSF	HC-ENG EC/AP
TOT.LD.	40.0 PSF	SEQN- 130721
DUR.FAC.	1.25	FROM LB
SPACING	24.0"	JREF- 1SLV215_Z07

(2220-/EDGLEY// STEPHENSON/HANGE /EDGELY CONSTRUCTION -- , ** - GE3)

Top chord 2x4 SP #2 N
Bot chord 2x4 SP #2 N
Webs 2x4 SP #2 N

See DWGS A11030EC1103 & GBLLETIN1103 for more requirements.

Deflection meets L/240 live and L/180 total load.

Plates sized for a minimum of 3.00 sq.in./piece.

THE BUILDING DESIGNER IS RESPONSIBLE FOR THE DESIGN OF THE ROOF AND CEILING DIAPHRAGMS, GABLE END SHEAR WALLS, AND SUPPORTING SHEAR WALLS. SHEAR WALLS MUST PROVIDE CONTINUOUS LATERAL RESTRAINT TO THE GABLE END. ALL CONNECTIONS TO BE DESIGNED BY THE BUILDING DESIGNER.

110 mph wind, 30.00 ft mean hgt, ASCE 7-98, CLOSED bldg, Located anywhere in roof, CAT II, EXP B, wind TC DL=5.0 psf, wind BC DL=5.0 psf.

(A) 1x4 "L" brace. 80% length of web member. Same species & grade or better. Attach with 8d Box or Gun (0.113"x2.5",min.)nails @ 6 " OC.

The overall height of this truss excluding overhang is 9-9-4.

+ MEMBER TO BE LATERALLY BRACED FOR HORIZONTAL WIND LOADS. BRACING SYSTEM TO BE DESIGNED AND FURNISHED BY OTHERS.

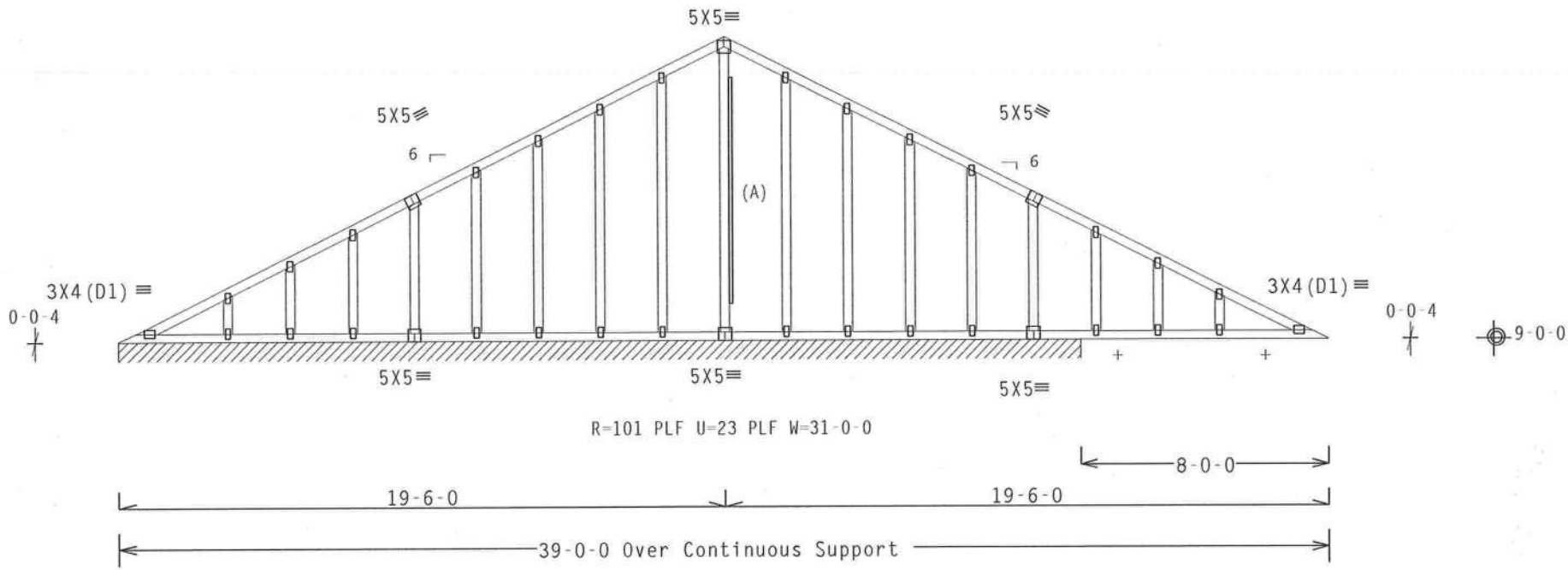

Note: All Plates Are 2X4 Except As Shown.

PLT TYP. Wave TPI\R | Design Crit: TPI-1995(STD) | 7.1 | FL/-/5/-/-/R/- | Scale =.1875"/Ft.

ALPINE
Alpine Engineered Products, Inc.
1950 Marley Drive
Haines City, FL 33844
FL Certificate of Authorization # 567

WARNING TRUSSES REQUIRE EXTREME CARE IN FABRICATION, HANDLING, SHIPPING, INSTALLING AND BRACING. REFER TO BCSI 1-03 (BUILDING COMPONENT SAFETY INFORMATION), PUBLISHED BY TPI (TRUSS PLATE INSTITUTE, 583 D'ONOFRIO DR., SUITE 200, MADISON, WI 53719) AND WTCA (WOOD TRUSS COUNCIL OF AMERICA, 6300 ENTERPRISE LN, MADISON, WI 53719) FOR SAFETY PRACTICES PRIOR TO PERFORMING THESE FUNCTIONS. UNLESS OTHERWISE INDICATED TOP CHORD SHALL HAVE PROPERLY ATTACHED STRUCTURAL PANELS AND BOTTOM CHORD SHALL HAVE A PROPERLY ATTACHED RIGID CEILING.

IMPORTANT FURNISH A COPY OF THIS DESIGN TO THE INSTALLATION CONTRACTOR. ALPINE ENGINEERED PRODUCTS, INC. SHALL NOT BE RESPONSIBLE FOR ANY DEVIATION FROM THIS DESIGN; ANY FAILURE TO BUILD THE TRUSS IN CONFORMANCE WITH TPI; OR FABRICATING, HANDLING, SHIPPING, INSTALLING & BRACING OF TRUSSES. DESIGN CONFORMS WITH APPLICABLE PROVISIONS OF NDS (NATIONAL DESIGN SPEC. BY AF&PA) AND TPI. ALPINE CONNECTOR PLATES ARE MADE OF 20/18/16GA (W,H/S/K) ASTM A653 GRADE 40/60 (W, K/H,S) GALV. STEEL. APPLY PLATES TO EACH FACE OF TRUSS AND. UNLESS OTHERWISE LOCATED ON THIS DESIGN, POSITION PER DRAWINGS 160A-Z. ANY INSPECTION OF PLATES FOLLOWED BY (I) SHALL BE PER ANNEX A3 OF TPI1-2002 SEC.3. A SEAL ON THIS DRAWING INDICATES ACCEPTANCE OF PROFESSIONAL ENGINEERING RESPONSIBILITY SOLELY FOR THE TRUSS COMPONENT DESIGN SHOWN. THE SUITABILITY AND USE OF THIS COMPONENT FOR ANY BUILDING IS THE RESPONSIBILITY OF THE BUILDING DESIGNER PER ANSI/TPI 1 SEC. 2.

JAMES F. COLLINS, JR. CERTIFICATE No. 0052212 STATE OF FLORIDA PROFESSIONAL ENGINEER
Apr 04 '05

TC LL	20.0 PSF	REF R215-- 90459
TC DL	10.0 PSF	DATE 04/04/05
BC DL	10.0 PSF	DRW HCUSR215 05094044
BC LL	0.0 PSF	HC-ENG EC/AP
TOT.LD.	40.0 PSF	SEQN- 130732
DUR.FAC.	1.25	FROM LB
SPACING	24.0"	JREF- 1SLV215_Z07

Top chord 2x6 SP #2 N
Bot chord 2x6 SP #2 N
Webs 2x4 SP #2 N

SPECIAL LOADS
------(LUMBER DUR.FAC.=1.25 / PLATE DUR.FAC.=1.25)
TC - From 60 PLF at 0.00 to 60 PLF at 45.00
BC - From 20 PLF at 0.00 to 20 PLF at 45.00
BC - 350 LB Conc. Load at 3.75, 14.00, 21.00, 24.00, 31.00 41.25

110 mph wind, 30.00 ft mean hgt, ASCE 7-98, CLOSED bldg, Located anywhere in roof, CAT II, EXP B, wind TC DL=5.0 psf, wind BC DL=5.0 psf.

Deflection meets L/240 live and L/180 total load.

WARNING: Furnish a copy of this DWG to the installation contractor. Special care must be taken during handling, shipping and installation of trusses. See "WARNING" note below.

THE BUILDING DESIGNER IS RESPONSIBLE FOR THE DESIGN OF THE ROOF AND CEILING DIAPHRAGMS, GABLE END SHEAR WALLS, AND SUPPORTING SHEAR WALLS. SHEAR WALLS MUST PROVIDE CONTINUOUS LATERAL RESTRAINT TO THE GABLE END. ALL CONNECTIONS TO BE DESIGNED BY THE BUILDING DESIGNER.

2 COMPLETE TRUSSES REQUIRED

Nailing Schedule: (0.131x3.0_g_nails)
Top Chord: 1 Row @ 12" o.c.
Bot Chord: 1 Row @ 12" o.c.
Webs : 1 Row @ 4" o.c.
Use equal spacing between rows and stagger nails in each row to avoid splitting.

See DWGS A11030EC1103 & GBLLETIN1103 for more requirements.

In lieu of structural panels use purlins to brace all flat TC @ 24" OC.

Plates sized for a minimum of 3.00 sq.in./piece.

The overall height of this truss excluding overhang is 10-0-0.

+ MEMBER TO BE LATERALLY BRACED FOR HORIZONTAL WIND LOADS. BRACING SYSTEM TO BE DESIGNED AND FURNISHED BY OTHERS.

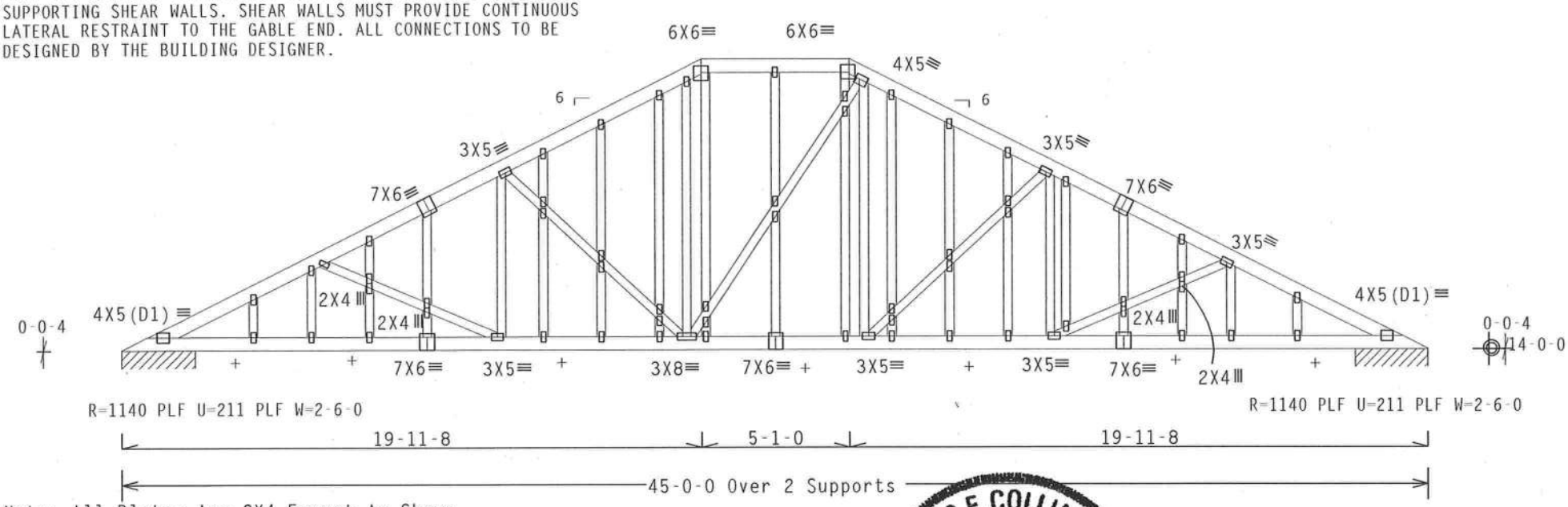

Note: All Plates Are 2X4 Except As Shown.

PLT TYP. Wave TPI\R Design Crit: TPI-1995(STD) 7.1 FL/-/5/-/-/R/- Scale =.1875"/Ft.

ALPINE
Alpine Engineered Products, Inc.
1950 Marley Drive
Haines City, FL 33844
FL Certificate of Authorization # 567

WARNING TRUSSES REQUIRE EXTREME CARE IN FABRICATION, HANDLING, SHIPPING, INSTALLING AND BRACING. REFER TO BCSI 1-03 (BUILDING COMPONENT SAFETY INFORMATION), PUBLISHED BY TPI (TRUSS PLATE INSTITUTE, 583 D'ONOFRIO DR., SUITE 200, MADISON, WI 53719) AND WTCA (WOOD TRUSS COUNCIL OF AMERICA, 6300 ENTERPRISE LN, MADISON, WI 53719) FOR SAFETY PRACTICES PRIOR TO PERFORMING THESE FUNCTIONS. UNLESS OTHERWISE INDICATED, TOP CHORD SHALL HAVE PROPERLY ATTACHED STRUCTURAL PANELS AND BOTTOM CHORD SHALL HAVE A PROPERLY ATTACHED RIGID CEILING.

IMPORTANT FURNISH A COPY OF THIS DESIGN TO THE INSTALLATION CONTRACTOR. ALPINE ENGINEERED PRODUCTS, INC. SHALL NOT BE RESPONSIBLE FOR ANY DEVIATION FROM THIS DESIGN; ANY FAILURE TO BUILD THE TRUSS IN CONFORMANCE WITH TPI; OR FABRICATING, HANDLING, SHIPPING, INSTALLING & BRACING OF TRUSSES. DESIGN CONFORMS WITH APPLICABLE PROVISIONS OF NDS (NATIONAL DESIGN SPEC, BY AF&PA) AND TPI. ALPINE CONNECTOR PLATES ARE MADE OF 20/18/16GA (W,H/S/K) ASTM A653 GRADE 40/60 (W, K/H,S) GALV. STEEL. APPLY PLATES TO EACH FACE OF TRUSS AND, UNLESS OTHERWISE LOCATED ON THIS DESIGN, POSITION PER DRAWINGS 160A-Z. ANY INSPECTION OF PLATES FOLLOWED BY (I) SHALL BE PER ANNEX A3 OF TPI1-2002 SEC.3. A SEAL ON THIS DRAWING INDICATES ACCEPTANCE OF PROFESSIONAL ENGINEERING RESPONSIBILITY SOLELY FOR THE TRUSS COMPONENT DESIGN SHOWN. THE SUITABILITY AND USE OF THIS COMPONENT FOR ANY BUILDING IS THE RESPONSIBILITY OF THE BUILDING DESIGNER PER ANSI/TPI 1 SEC. 2.

JAMES F. COLLINS JR. CERTIFICATE No. 0052212 STATE OF FLORIDA PROFESSIONAL ENGINEER
Apr 04 '05

TC LL	20.0 PSF	REF R215-- 90460
TC DL	10.0 PSF	DATE 04/04/05
BC DL	10.0 PSF	DRW HCUSR215 05094045
BC LL	0.0 PSF	HC-ENG EC/AP
TOT.LD.	40.0 PSF	SEQN- 43110
DUR.FAC.	1.25	FROM CDM
SPACING	24.0"	JREF- 1SLV215_Z07

Top chord 2x4 SP #2 N
Bot chord 2x4 SP #2 N
Webs 2x4 SP #2 N

Gable end supports 8" max rake overhang.

In lieu of structural panels use purlins to brace all flat TC @ 24" OC.

Plates sized for a minimum of 3.00 sq.in./piece.

The overall height of this truss excluding overhang is 4-3-11.

THE BUILDING DESIGNER IS RESPONSIBLE FOR THE DESIGN OF THE ROOF AND CEILING DIAPHRAGMS, GABLE END SHEAR WALLS, AND SUPPORTING SHEAR WALLS. SHEAR WALLS MUST PROVIDE CONTINUOUS LATERAL RESTRAINT TO THE GABLE END. ALL CONNECTIONS TO BE DESIGNED BY THE BUILDING DESIGNER.

110 mph wind, 30.00 ft mean hgt, ASCE 7-98, CLOSED bldg, not located within 6.50 ft from roof edge, CAT II, EXP B, wind TC DL=5.0 psf, wind BC DL=5.0 psf.

See DWGS A11030EC1103 & GBLLETIN1103 for more requirements.

Deflection meets L/240 live and L/180 total load.

WARNING: Furnish a copy of this DWG to the installation contractor. Special care must be taken during handling, shipping and installation of trusses. See "WARNING" note below.

+ MEMBER TO BE LATERALLY BRACED FOR HORIZONTAL WIND LOADS. BRACING SYSTEM TO BE DESIGNED AND FURNISHED BY OTHERS.

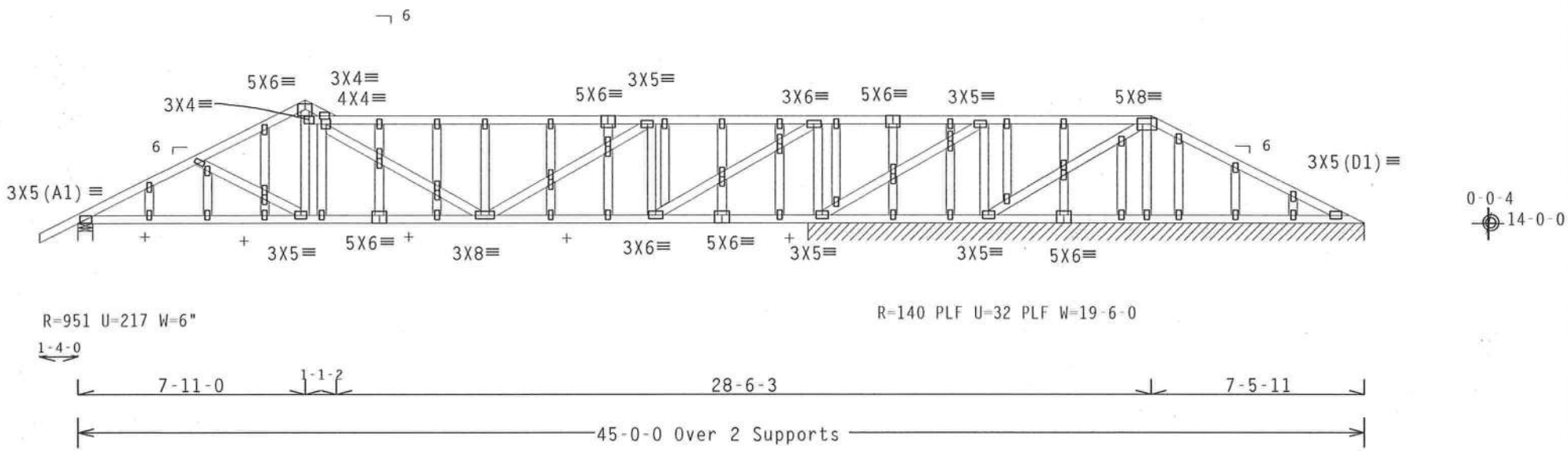

Note: All Plates Are 2X4 Except As Shown.

PLT TYP. Wave TPI\R | Design Crit: TPI-1995(STD) | 7.1 | QTY 1 | FL/-/5/-/-/R/- | Scale =.1875"/Ft.

ALPINE
Alpine Engineered Products, Inc.
1950 Marley Drive
Haines City, FL 33844
FL Certificate of Authorization # 567

WARNING TRUSSES REQUIRE EXTREME CARE IN FABRICATION, HANDLING, SHIPPING, INSTALLING AND BRACING. REFER TO BCSI 1-03 (BUILDING COMPONENT SAFETY INFORMATION), PUBLISHED BY TPI (TRUSS PLATE INSTITUTE, 583 D'ONOFRIO DR., SUITE 200, MADISON, WI 53719) AND WTCA (WOOD TRUSS COUNCIL OF AMERICA, 6300 ENTERPRISE LN MADISON, WI 53719) FOR SAFETY PRACTICES PRIOR TO PERFORMING THESE FUNCTIONS. UNLESS OTHERWISE INDICATED TOP CHORD SHALL HAVE PROPERLY ATTACHED STRUCTURAL PANELS AND BOTTOM CHORD SHALL HAVE A PROPERLY ATTACHED RIGID CEILING.

IMPORTANT FURNISH A COPY OF THIS DESIGN TO THE INSTALLATION CONTRACTOR. ALPINE ENGINEERED PRODUCTS, INC. SHALL NOT BE RESPONSIBLE FOR ANY DEVIATION FROM THIS DESIGN; ANY FAILURE TO BUILD THE TRUSS IN CONFORMANCE WITH TPI; OR FABRICATING, HANDLING, SHIPPING, INSTALLING & BRACING OF TRUSSES. DESIGN CONFORMS WITH APPLICABLE PROVISIONS OF NDS (NATIONAL DESIGN SPEC, BY AF&PA) AND TPI. ALPINE CONNECTOR PLATES ARE MADE OF 20/18/16GA (W,H/S/K) ASTM A653 GRADE 40/60 (W, K/H,S) GALV. STEEL. APPLY PLATES TO EACH FACE OF TRUSS AND, UNLESS OTHERWISE LOCATED ON THIS DESIGN, POSITION PER DRAWINGS 160A-Z. ANY INSPECTION OF PLATES FOLLOWED BY (I) SHALL BE PER ANNEX A3 OF TPI1-2002 SEC.3. A SEAL ON THIS DRAWING INDICATES ACCEPTANCE OF PROFESSIONAL ENGINEERING RESPONSIBILITY SOLELY FOR THE TRUSS COMPONENT DESIGN SHOWN. THE SUITABILITY AND USE OF THIS COMPONENT FOR ANY BUILDING IS THE RESPONSIBILITY OF THE BUILDING DESIGNER PER ANSI/TPI 1 SEC. 2.

JAMES F. COLLINS, JR. CERTIFICATE No. 0052212 STATE OF FLORIDA PROFESSIONAL ENGINEER
Apr 04 '05

TC LL	20.0 PSF	REF R215-- 90461
TC DL	10.0 PSF	DATE 04/04/05
BC DL	10.0 PSF	DRW HCUSR215 05094050
BC LL	0.0 PSF	HC-ENG EC/AP
TOT.LD.	40.0 PSF	SEQN- 43102
DUR.FAC.	1.25	FROM LB
SPACING	24.0"	JREF- 1SLV215_Z07

Top chord 2x4 SP #2 N
Bot chord 2x4 SP #2 N
Webs 2x4 SP #2 N

110 mph wind, 30.00 ft mean hgt, ASCE 7-98, CLOSED bldg, Located anywhere in roof, CAT II, EXP B, wind TC DL=5.0 psf, wind BC DL=2.0 psf.

Gable end supports 8" max rake overhang.

In lieu of rigid ceiling use purlins to brace BC @ 24" OC

Plates sized for a minimum of 3.00 sq.in./piece.

THE BUILDING DESIGNER IS RESPONSIBLE FOR THE DESIGN OF THE ROOF AND CEILING DIAPHRAGMS, GABLE END SHEAR WALLS, AND SUPPORTING SHEAR WALLS. SHEAR WALLS MUST PROVIDE CONTINUOUS LATERAL RESTRAINT TO THE GABLE END. ALL CONNECTIONS TO BE DESIGNED BY THE BUILDING DESIGNER.

2 COMPLETE TRUSSES REQUIRED

Nailing Schedule: (0.131x3.0_g_nails)
Top Chord: 1 Row @ 12" o.c.
Bot Chord: 1 Row @ 12" o.c.
Webs : 1 Row @ 4" o.c.
Use equal spacing between rows and stagger nails in each row to avoid splitting.

See DWGS A11030EC1103 & GBLLETIN1103 for more requirements.

Deflection meets L/240 live and L/180 total load.

The overall height of this truss excluding overhang is 1-7-3.

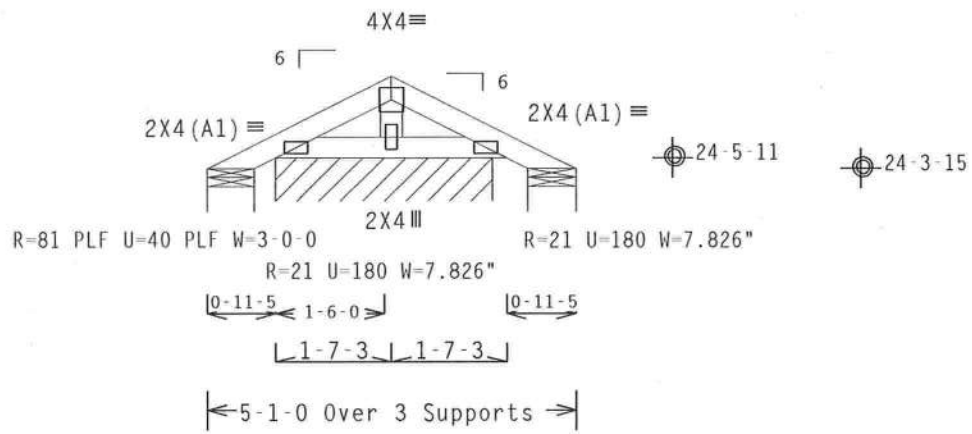

PLT TYP. Wave TPI\R | Design Crit: TPI-1995(STD) | 7.1 | FL/-/5/-/-/R/- | Scale =.375"/Ft.

ALPINE
Alpine Engineered Products, Inc.
1950 Marley Drive
Haines City, FL 33844
FL Certificate of Authorization # 567

WARNING TRUSSES REQUIRE EXTREME CARE IN FABRICATION, HANDLING, SHIPPING, INSTALLING AND BRACING. REFER TO BCSI 1-03 (BUILDING COMPONENT SAFETY INFORMATION), PUBLISHED BY TPI (TRUSS PLATE INSTITUTE, 583 D'ONOFRIO DR., SUITE 200, MADISON, WI 53719) AND WTCA (WOOD TRUSS COUNCIL OF AMERICA, 6300 ENTERPRISE LN, MADISON, WI 53719) FOR SAFETY PRACTICES PRIOR TO PERFORMING THESE FUNCTIONS. UNLESS OTHERWISE INDICATED, TOP CHORD SHALL HAVE PROPERLY ATTACHED STRUCTURAL PANELS AND BOTTOM CHORD SHALL HAVE A PROPERLY ATTACHED RIGID CEILING.

IMPORTANT FURNISH A COPY OF THIS DESIGN TO THE INSTALLATION CONTRACTOR. ALPINE ENGINEERED PRODUCTS, INC. SHALL NOT BE RESPONSIBLE FOR ANY DEVIATION FROM THIS DESIGN; ANY FAILURE TO BUILD THE TRUSS IN CONFORMANCE WITH TPI; OR FABRICATING, HANDLING, SHIPPING, INSTALLING & BRACING OF TRUSSES DESIGN CONFORMS WITH APPLICABLE PROVISIONS OF NDS (NATIONAL DESIGN SPEC, BY AF&PA) AND TPI. ALPINE CONNECTOR PLATES ARE MADE OF 20/18/16GA (W,H/S/K) ASTM A653 GRADE 40/60 (W, K/H,S) GALV. STEEL. APPLY PLATES TO EACH FACE OF TRUSS AND, UNLESS OTHERWISE LOCATED ON THIS DESIGN, POSITION PER DRAWINGS 160A-Z. ANY INSPECTION OF PLATES FOLLOWED BY (1) SHALL BE PER ANNEX A3 OF TPI1-2002 SEC.3. A SEAL ON THIS DRAWING INDICATES ACCEPTANCE OF PROFESSIONAL ENGINEERING RESPONSIBILITY SOLELY FOR THE TRUSS COMPONENT DESIGN SHOWN. THE SUITABILITY AND USE OF THIS COMPONENT FOR ANY BUILDING IS THE RESPONSIBILITY OF THE BUILDING DESIGNER PER ANSI/TPI 1 SEC. 2.

JAMES F. COLLINS, JR. CERTIFICATE No. 0052212 STATE OF FLORIDA PROFESSIONAL ENGINEER

Apr 04 '05

TC LL	20.0 PSF	REF	R215-- 90462
TC DL	10.0 PSF	DATE	04/04/05
BC DL	2.0 PSF	DRW	HCUSR215 05094046
BC LL	0.0 PSF	HC-ENG	EC/AP
TOT.LD.	32.0 PSF	SEQN-	43121
DUR.FAC.	1.25	FROM	CDM
SPACING	24.0"	JREF-	1SLV215_Z07

Top chord 2x4 SP #2 N
Bot chord 2x4 SP #2 N
Webs 2x4 SP #2 N

In lieu of structural panels or rigid ceiling use purlins to brace all flat TC @ 24" OC, all BC @ 24" OC.

Deflection meets L/240 live and L/180 total load.

The overall height of this truss excluding overhang is 1-0-0.

Refer to DWG PIGBACKB0204 for piggyback details.
Top chord of supporting truss under piggyback to be braced @ 24" O.C., unless otherwise specified.

110 mph wind, 30.00 ft mean hgt, ASCE 7-98, CLOSED bldg, not located within 4.50 ft from roof edge, CAT II, EXP B, wind TC DL=5.0 psf, wind BC DL=2.0 psf.

Plates sized for a minimum of 3.00 sq.in./piece.

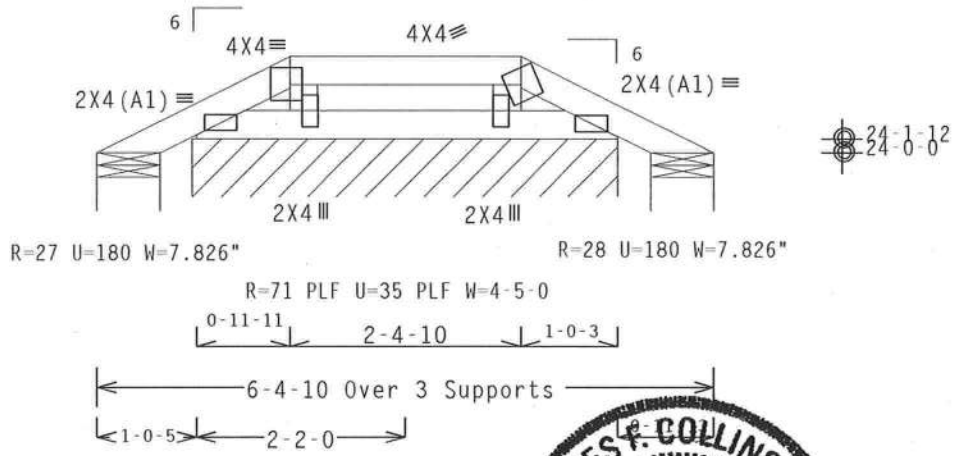

PLT TYP. Wave TPI\R | Design Crit: TPI-1995(STD) | 7.[illegible]-10-20 | [illegible] | FL/-/5/-/-/R/- | Scale =.5"/Ft.

ALPINE
Alpine Engineered Products, Inc.
1950 Marley Drive
Haines City, FL 33844
FL Certificate of Authorization # 567

WARNING TRUSSES REQUIRE EXTREME CARE IN FABRICATION, HANDLING, SHIPPING, INSTALLING AND BRACING. REFER TO BCSI 1-03 (BUILDING COMPONENT SAFETY INFORMATION), PUBLISHED BY TPI (TRUSS PLATE INSTITUTE, 583 D'ONOFRIO DR., SUITE 200, MADISON, WI 53719) AND WTCA (WOOD TRUSS COUNCIL OF AMERICA, 6300 ENTERPRISE LN MADISON, WI 53719) FOR SAFETY PRACTICES PRIOR TO PERFORMING THESE FUNCTIONS. UNLESS OTHERWISE INDICATED TOP CHORD SHALL HAVE PROPERLY ATTACHED STRUCTURAL PANELS AND BOTTOM CHORD SHALL HAVE A PROPERLY ATTACHED RIGID CEILING.

IMPORTANT FURNISH A COPY OF THIS DESIGN TO THE INSTALLATION CONTRACTOR. ALPINE ENGINEERED PRODUCTS, INC. SHALL NOT BE RESPONSIBLE FOR ANY DEVIATION FROM THIS DESIGN; ANY FAILURE TO BUILD THE TRUSS IN CONFORMANCE WITH TPI; OR FABRICATING, HANDLING, SHIPPING, INSTALLING & BRACING OF TRUSSES. DESIGN CONFORMS WITH APPLICABLE PROVISIONS OF NDS (NATIONAL DESIGN SPEC, BY AF&PA) AND TPI. ALPINE CONNECTOR PLATES ARE MADE OF 20/18/16GA (W,H/S/K) ASTM A653 GRADE 40/60 (W, K/H,S) GALV. STEEL. APPLY PLATES TO EACH FACE OF TRUSS AND, UNLESS OTHERWISE LOCATED ON THIS DESIGN, POSITION PER DRAWINGS 160A-Z. ANY INSPECTION OF PLATES FOLLOWED BY (1) SHALL BE PER ANNEX A3 OF TPI1-2002 SEC.3. A SEAL ON THIS DRAWING INDICATES ACCEPTANCE OF PROFESSIONAL ENGINEERING RESPONSIBILITY SOLELY FOR THE TRUSS COMPONENT DESIGN SHOWN. THE SUITABILITY AND USE OF THIS COMPONENT FOR ANY BUILDING IS THE RESPONSIBILITY OF THE BUILDING DESIGNER PER ANSI/TPI 1 SEC. 2.

JAMES F. COLLINS, JR. CERTIFICATE No. 0052212 STATE OF FLORIDA PROFESSIONAL ENGINEER
Apr 04 '05

TC LL	20.0 PSF	REF R215-- 90463
TC DL	10.0 PSF	DATE 04/04/05
BC DL	2.0 PSF	DRW HCUSR215 05094047
BC LL	0.0 PSF	HC-ENG EC/AP
TOT.LD.	32.0 PSF	SEQN- 43131
DUR.FAC.	1.25	FROM CDM
SPACING	24.0"	JREF- 1SLV215_Z07

Top chord 2x4 SP #2 N
Bot chord 2x4 SP #2 N
Webs 2x4 SP #2 N

The overall height of this truss excluding overhang is 4-4-3.

110 mph wind, 30.00 ft mean hgt, ASCE 7-98, CLOSED bldg, not located within 4.50 ft from roof edge, CAT II, EXP B, wind TC DL=5.0 psf, wind BC DL=5.0 psf.

Right end vertical not exposed to wind pressure.

Deflection meets L/240 live and L/180 total load.

Plates sized for a minimum of 3.00 sq.in./piece.

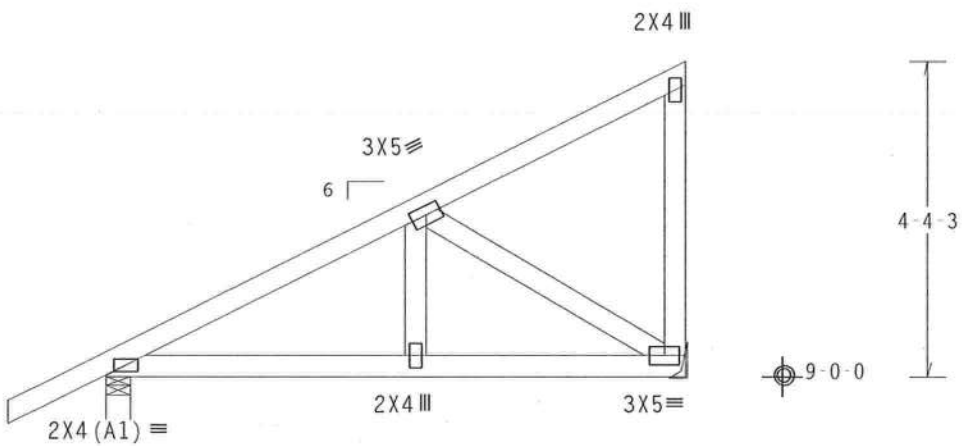

R=428 U=180 W=4"

R=297 U=180 H=Simpson LUS24
w/ (2) 10d Common, 0.148"x3.0" nails in Truss
w/ (4) 10d Common, 0.148"x3.0" nails in Girder
Girder is (1)2X6 min. So.Pine

1-4-0

8-0-0 Over 2 Supports

PLT TYP. Wave TPI\R | Design Crit: TPI-1995(STD) | 7.1 [illegible] | FL/-/5/-/-/R/- | Scale =.375"/Ft.

ALPINE
Alpine Engineered Products, Inc.
1950 Marley Drive
Haines City, FL 33844
FL Certificate of Authorization # 567

WARNING TRUSSES REQUIRE EXTREME CARE IN FABRICATION, HANDLING, SHIPPING, INSTALLING AND BRACING. REFER TO BCSI 1-03 (BUILDING COMPONENT SAFETY INFORMATION), PUBLISHED BY TPI (TRUSS PLATE INSTITUTE, 583 D'ONOFRIO DR., SUITE 200, MADISON, WI 53719) AND WTCA (WOOD TRUSS COUNCIL OF AMERICA, 6300 ENTERPRISE LN MADISON, WI 53719) FOR SAFETY PRACTICES PRIOR TO PERFORMING THESE FUNCTIONS. UNLESS OTHERWISE INDICATED TOP CHORD SHALL HAVE PROPERLY ATTACHED STRUCTURAL PANELS AND BOTTOM CHORD SHALL HAVE A PROPERLY ATTACHED RIGID CEILING.

IMPORTANT FURNISH A COPY OF THIS DESIGN TO THE INSTALLATION CONTRACTOR. ALPINE ENGINEERED PRODUCTS, INC. SHALL NOT BE RESPONSIBLE FOR ANY DEVIATION FROM THIS DESIGN; ANY FAILURE TO BUILD THE TRUSS IN CONFORMANCE WITH TPI; OR FABRICATING, HANDLING, SHIPPING, INSTALLING & BRACING OF TRUSSES. DESIGN CONFORMS WITH APPLICABLE PROVISIONS OF NDS (NATIONAL DESIGN SPEC. BY AF&PA) AND TPI. ALPINE CONNECTOR PLATES ARE MADE OF 20/18/16GA (W,H/S/K) ASTM A653 GRADE 40/60 (W, K/H,S) GALV. STEEL. APPLY PLATES TO EACH FACE OF TRUSS AND, UNLESS OTHERWISE LOCATED ON THIS DESIGN, POSITION PER DRAWINGS 160A-Z. ANY INSPECTION OF PLATES FOLLOWED BY (I) SHALL BE PER ANNEX A3 OF TPI1-2002 SEC.3. A SEAL ON THIS DRAWING INDICATES ACCEPTANCE OF PROFESSIONAL ENGINEERING RESPONSIBILITY SOLELY FOR THE TRUSS COMPONENT DESIGN SHOWN. THE SUITABILITY AND USE OF THIS COMPONENT FOR ANY BUILDING IS THE RESPONSIBILITY OF THE BUILDING DESIGNER PER ANSI/TPI 1 SEC. 2.

JAMES F. COLLINS, JR. CERTIFICATE No. 0052212 STATE OF FLORIDA PROFESSIONAL ENGINEER
Apr 04 '05

TC LL	20.0 PSF	REF	R215-- 90464
TC DL	10.0 PSF	DATE	04/04/05
BC DL	10.0 PSF	DRW	HCUSR215 05094029
BC LL	0.0 PSF	HC-ENG	EC/AP *
TOT.LD.	40.0 PSF	SEQN-	130842
DUR.FAC.	1.25	FROM	CDM
SPACING	24.0"	JREF-	1SLV215_Z07

Top chord 2x4 SP #2 N
Bot chord 2x6 SP #2 N
Webs 2x4 SP #2 N

110 mph wind, 15.00 ft mean hgt, ASCE 7-98, CLOSED bldg, Located anywhere in roof, CAT II, EXP B, wind TC DL=5.0 psf, wind BC DL=5.0 psf.

IT IS THE RESPONSIBILITY OF THE BUILDING DESIGNER TO VERIFY AND APPROVE THE LOADING.

SPECIAL LOADS
------(LUMBER DUR.FAC.=1.25 / PLATE DUR.FAC.=1.25)
TC - From 60 PLF at 0.00 to 60 PLF at 8.00
BC - From 20 PLF at 0.00 to 20 PLF at 8.00
BC - 633 LB Conc. Load at 1.94, 3.94, 5.94

Right end vertical not exposed to wind pressure.

Deflection meets L/240 live and L/180 total load.

Plates sized for a minimum of 3.00 sq.in./piece.

The overall height of this truss excluding overhang is 4-4-3.

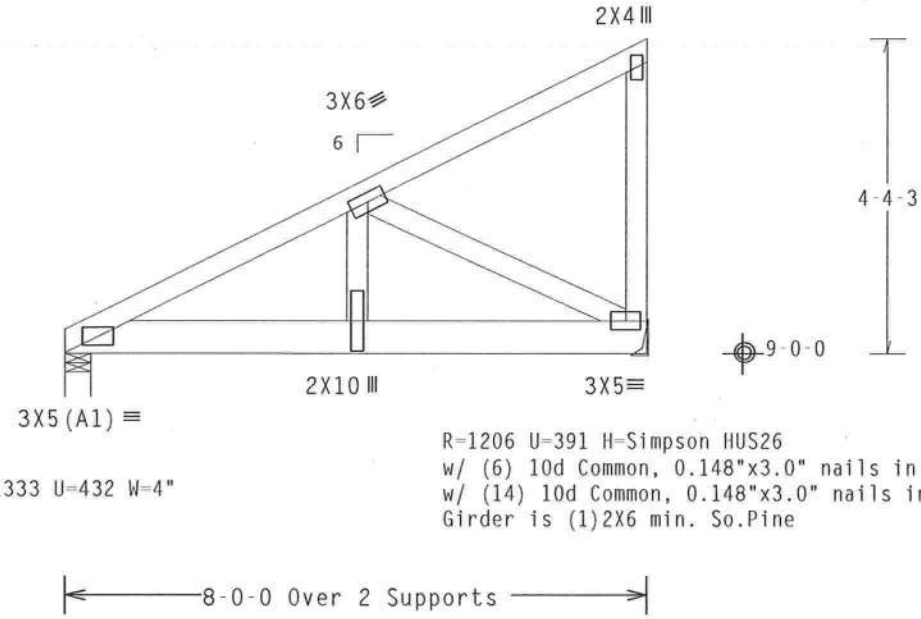

PLT TYP. Wave TPI\R Design Crit: TPI-1995(STD) 7.1 11.6.20 FL/-/5/-/-/R/- Scale =.375"/Ft.

ALPINE
Alpine Engineered Products, Inc.
1950 Marley Drive
Haines City, FL 33844
FL Certificate of Authorization # 567

WARNING TRUSSES REQUIRE EXTREME CARE IN FABRICATION, HANDLING, SHIPPING, INSTALLING AND BRACING. REFER TO BCSI 1-03 (BUILDING COMPONENT SAFETY INFORMATION), PUBLISHED BY TPI (TRUSS PLATE INSTITUTE, 583 D'ONOFRIO DR., SUITE 200, MADISON, WI 53719) AND WTCA (WOOD TRUSS COUNCIL OF AMERICA, 6300 ENTERPRISE LN MADISON, WI 53719) FOR SAFETY PRACTICES PRIOR TO PERFORMING THESE FUNCTIONS. UNLESS OTHERWISE INDICATED TOP CHORD SHALL HAVE PROPERLY ATTACHED STRUCTURAL PANELS AND BOTTOM CHORD SHALL HAVE A PROPERLY ATTACHED RIGID CEILING.

IMPORTANT FURNISH A COPY OF THIS DESIGN TO THE INSTALLATION CONTRACTOR. ALPINE ENGINEERED PRODUCTS, INC. SHALL NOT BE RESPONSIBLE FOR ANY DEVIATION FROM THIS DESIGN; ANY FAILURE TO BUILD THE TRUSS IN CONFORMANCE WITH TPI; OR FABRICATING, HANDLING, SHIPPING, INSTALLING & BRACING OF TRUSSES DESIGN CONFORMS WITH APPLICABLE PROVISIONS OF NDS (NATIONAL DESIGN SPEC. BY AF&PA) AND TPI. ALPINE CONNECTOR PLATES ARE MADE OF 20/18/16GA (W,H/S/K) ASTM A653 GRADE 40/60 (W, K/H,S) GALV. STEEL. APPLY PLATES TO EACH FACE OF TRUSS AND, UNLESS OTHERWISE LOCATED ON THIS DESIGN, POSITION PER DRAWINGS 160A-Z. ANY INSPECTION OF PLATES FOLLOWED BY (I) SHALL BE PER ANNEX A3 OF TPI1-2002 SEC.3. A SEAL ON THIS DRAWING INDICATES ACCEPTANCE OF PROFESSIONAL ENGINEERING RESPONSIBILITY SOLELY FOR THE TRUSS COMPONENT DESIGN SHOWN. THE SUITABILITY AND USE OF THIS COMPONENT FOR ANY BUILDING IS THE RESPONSIBILITY OF THE BUILDING DESIGNER PER ANSI/TPI 1 SEC. 2.

JAMES F. COLLINS CERTIFICATE No. 0052212 STATE OF FLORIDA PROFESSIONAL ENGINEER
Apr 04 '05

TC LL	20.0 PSF	REF	R215-- 90465
TC DL	10.0 PSF	DATE	04/04/05
BC DL	10.0 PSF	DRW	HCUSR215 05094048
BC LL	0.0 PSF	HC-ENG	EC/AP
TOT.LD.	40.0 PSF	SEQN-	130864
DUR.FAC.	1.25	FROM	CDM
SPACING	24.0"	JREF-	1SLV215_Z07

CLB WEB BRACE SUBSTITUTION

THIS DETAIL IS TO BE USED WHEN CONTINUOUS LATERAL BRACING (CLB) IS SPECIFIED ON AN ALPINE TRUSS DESIGN BUT AN ALTERNATIVE WEB BRACING METHOD IS DESIRED.

NOTES:

THIS DETAIL IS ONLY APPLICABLE FOR CHANGING THE SPECIFIED CLB SHOWN ON SINGLE PLY SEALED DESIGNS TO T-BRACING OR SCAB BRACING.

ALTERNATIVE BRACING SPECIFIED IN CHART BELOW MAY BE CONSERVATIVE. FOR MINIMUM ALTERNATIVE BRACING, RE-RUN DESIGN WITH APPROPRIATE BRACING.

WEB MEMBER SIZE	SPECIFIED CLB BRACING	ALTERNATIVE BRACING T OR L-BRACE	ALTERNATIVE BRACING SCAB BRACE
2X3 OR 2X4	1 ROW	2X4	1-2X4
2X3 OR 2X4	2 ROWS	2X6	2-2X4
2X6	1 ROW	2X4	1-2X6
2X6	2 ROWS	2X6	2-2X4(*)
2X8	1 ROW	2X6	1-2X8
2X8	2 ROWS	2X6	2-2X6(*)

T-BRACE, L-BRACE AND SCAB BRACE TO BE SAME SPECIES AND GRADE OR BETTER THAN WEB MEMBER UNLESS SPECIFIED OTHERWISE ON ENGINEER'S SEALED DESIGN.

(*) CENTER SCAB ON WIDE FACE OF WEB. APPLY (1) SCAB TO EACH FACE OF WEB.

T-BRACING OR L-BRACING:

APPLY TO EITHER SIDE OF WEB NARROW FACE

ATTACH WITH 16d NAILS AT 6" O.C.

BRACE IS A MINIMUM 80% OF WEB MEMBER LENGTH

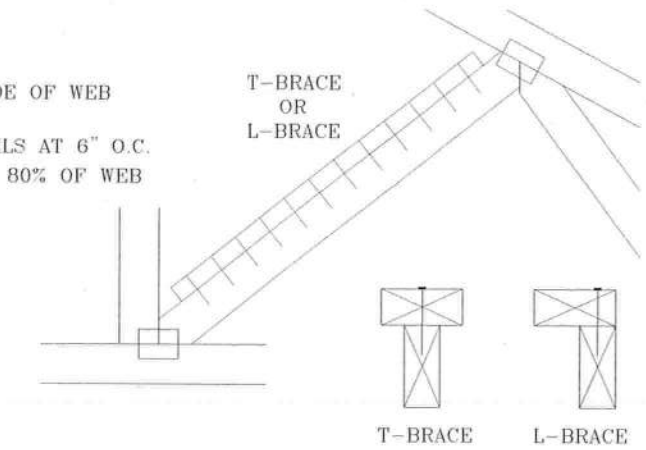

SCAB BRACING:

APPLY SCAB(S) TO WIDE FACE OF WEB.

NO MORE THAN (1) SCAB PER FACE.

ATTACH WITH 10d OR .128"x3" GUN NAILS AT 6" O.C. BRACE IS A MINIMUM 80% OF WEB MEMBER LENGTH

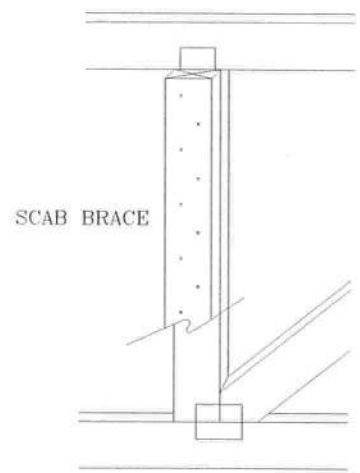

THIS DRAWING REPLACES DRAWING 579,640

ALPINE

ALPINE ENGINEERED PRODUCTS, INC.
POMPANO BEACH, FLORIDA

JAMES F. COLLINS, JR.
CERTIFICATE
No. 0052212
STATE OF
FLORIDA
PROFESSIONAL ENGINEER
04/29/2005

TC LL	PSF	REF CLB SUBST.
TC DL	PSF	DATE 11/26/03
BC DL	PSF	DRWG BRCLBSUB1103
BC LL	PSF	-ENG MLH/KAR
TOT. LD.	PSF	
DUR. FAC.		
SPACING		

BEARING BLOCK NAIL SPACING DETAIL

MINIMUM SPACING FOR SINGLE BEARING BLOCK IS SHOWN. DOUBLE NAIL SPACINGS AND STAGGER NAILING FOR TWO BLOCKS. GREATER SPACING MAY BE REQUIRED TO AVOID SPLITTING.

A – EDGE DISTANCE AND SPACING BETWEEN STAGGERED ROWS OF NAILS (6 NAIL DIAMETERS)
B – SPACING OF NAILS IN A ROW (12 NAIL DIAMETERS)
C – END DISTANCE (15 NAIL DIAMETERS)

IF NAIL HOLES ARE PREBORED, SOME SPACING MAY BE REDUCED BY THE AMOUNTS GIVEN BELOW:
- * SPACING MAY BE REDUCED BY 50%
- ** SPACING MAY BE REDUCED BY 33%

BEARING BLOCK TO BE SAME SIZE AND SPECIES AS BOTTOM CHORD. BLOCKS MAY BE ANY GRADE WITHIN THE SPECIES, PROVIDED THE COMPRESSION PERPENDICULAR TO GRAIN VALUE (Fc–perp) IS AT LEAST THAT OF THE CHORD.

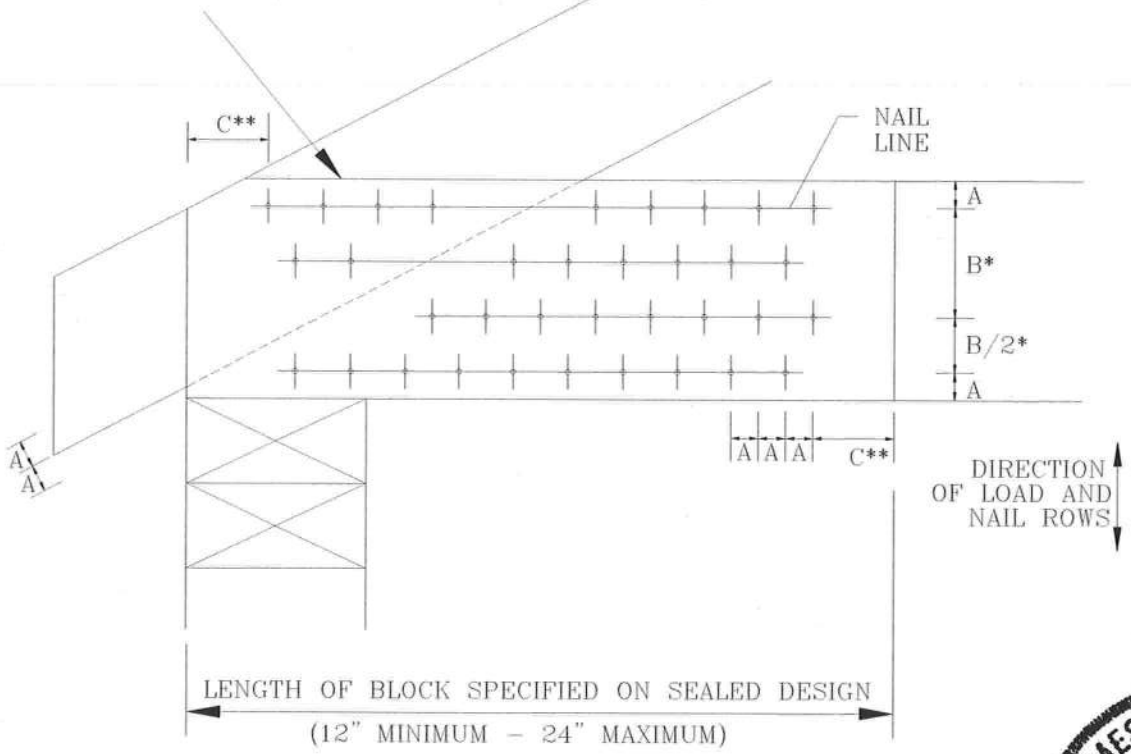

MAXIMUM NUMBER OF NAIL LINES PARALLEL TO GRAIN

NAIL TYPE	CHORD SIZE 2X4	2X6	2X8	2X10	2X12
8d BOX (0.113"X2.5")	3	6	9	12	15
10d BOX (0.128"X3")	3	5	7	10	12
12d BOX (0.128"X3.25")	3	5	7	10	12
16d BOX (0.135"X3.5")	3	5	7	10	12
20d BOX (0.148"X4")	2	4	5	6	8
8d COMMON (0.131"X2.5")	3	5	7	10	12
10d COMMON (0.148"X3")	2	4	6	8	10
12d COMMON (0.148"X3.25")	2	4	6	8	10
16d COMMON (0.162"X3.5")	2	4	6	8	10
0.120"X2.5" GUN	3	6	8	11	14
0.131"X2.5" GUN	3	5	7	10	12
0.120"X3.0" GUN	3	6	8	11	14
0.131"x3.0" GUN	3	5	7	10	12

MINIMUM NAIL SPACING DISTANCES

NAIL TYPE	DISTANCES A	B*	C**
8d BOX (0.113"X2.5")	3/4"	1 3/8"	1 3/4"
10d BOX (0.128"X3")	7/8"	1 5/8"	2"
12d BOX (0.128"X3.25")	7/8"	1 5/8"	2"
16d BOX (0.135"X3.5")	7/8"	1 5/8"	2 1/8"
20d BOX (0.148"X4")	1"	1 7/8"	2 1/4"
8d COMMON (0.131"X2.5")	7/8"	1 5/8"	2"
10d COMMON (0.148"X3")	1"	1 7/8"	2 1/4"
12d COMMON (0.148"X3.25")	1"	1 7/8"	2 1/4"
16d COMMON (0.162"X3.5")	1'	2"	2 1/2"
0.120"X2.5" GUN	3/4"	1 1/2"	1 7/8"
0.131"X2.5" GUN	7/8"	1 5/8"	2"
0.120"X3.0" GUN	3/4"	1 1/2"	1 7/8"
[illegible]3.0" GUN	7/8"	1 5/8"	2"

THIS DRAWING REPLACES DRAWING B139 AND CNBRGBLK0699

ALPINE

ALPINE ENGINEERED PRODUCTS, INC.
POMPANO BEACH, FLORIDA

WARNING TRUSSES REQUIRE EXTREME CARE IN FABRICATING, HANDLING, SHIPPING, INSTALLING AND BRACING. REFER TO BCSI 1-03 (BUILDING COMPONENT SAFETY INFORMATION), PUBLISHED BY TPI (TRUSS PLATE INSTITUTE, 583 D'ONOFRIO DR., SUITE 200, MADISON, WI 53719) AND WTCA (WOOD TRUSS COUNCIL OF AMERICA, 6300 ENTERPRISE LN, MADISON, WI 53719) FOR SAFETY PRACTICES PRIOR TO PERFORMING THESE FUNCTIONS. UNLESS OTHERWISE INDICATED, TOP CHORD SHALL HAVE PROPERLY ATTACHED STRUCTURAL PANELS AND BOTTOM CHORD SHALL HAVE A PROPERLY ATTACHED RIGID CEILING.

IMPORTANT FURNISH COPY OF THIS DESIGN TO INSTALLATION CONTRACTOR. ALPINE ENGINEERED PRODUCTS, INC., SHALL NOT BE RESPONSIBLE FOR ANY DEVIATION FROM THIS DESIGN; ANY FAILURE TO BUILD THE TRUSS IN CONFORMANCE WITH TPI; OR FABRICATING, HANDLING, SHIPPING, INSTALLING & BRACING OF TRUSSES. DESIGN CONFORMS WITH APPLICABLE PROVISIONS OF NDS (NATIONAL DESIGN SPEC, BY AF&PA) AND TPI. ALPINE CONNECTOR PLATES ARE MADE OF 20/18/16GA (W,H/S/K) ASTM A653 GRADE 40/60 (W,K/H,S) GALV. STEEL. APPLY PLATES TO EACH FACE OF TRUSS AND, UNLESS OTHERWISE LOCATED ON THIS DESIGN, POSITION PER DRAWINGS 160A-Z. ANY INSPECTION OF PLATES FOLLOWED BY (I) SHALL BE PER ANNEX A3 OF TPI 1-2002 SEC. 3. A SEAL ON THIS DRAWING INDICATES ACCEPTANCE OF PROFESSIONAL ENGINEERING RESPONSIBILITY SOLELY FOR THE TRUSS COMPONENT DESIGN SHOWN. THE SUITABILITY AND USE OF THIS COMPONENT FOR ANY BUILDING IS THE RESPONSIBILITY OF THE BUILDING DESIGNER, PER ANSI/TPI 1 SEC. 2.

JAMES F. COLLINS JR.
CERTIFICATE
No. 0052212
STATE OF FLORIDA
PROFESSIONAL ENGINEER
01/18/2005

REF	BEARING BLOCK
DATE	11/26/03
DRWG	CNBRGBLK1103
-ENG	SJP/KAR

ASCE 7-98: 110 MPH WIND SPEED, 30' MEAN HEIGHT, ENCLOSED, I = 1.00, EXPOSURE C

MAX GABLE VERTICAL LENGTH

2X4 GABLE VERTICAL SPACING	SPECIES	BRACE GRADE	NO BRACES	(1) 1X4 "L" BRACE * GROUP A	(1) 1X4 "L" BRACE * GROUP B	(1) 2X4 "L" BRACE * GROUP A	(1) 2X4 "L" BRACE * GROUP B	(2) 2X4 "L" BRACE ** GROUP A	(2) 2X4 "L" BRACE ** GROUP B	(1) 2X6 "L" BRACE * GROUP A	(1) 2X6 "L" BRACE * GROUP B	(2) 2X6 "L" BRACE ** GROUP A	(2) 2X6 "L" BRACE ** GROUP B
24" O.C.	SPF HF	#1 / #2	3' 8"	6' 4"	6' 6"	7' 6"	7' 8"	8' 11"	9' 2"	11' 9"	12' 1"	14' 0"	14' 0"
		#3	3' 7"	5' 5"	5' 5"	7' 2"	7' 2"	8' 11"	8' 11"	11' 2"	11' 2"	14' 0"	14' 0"
		STUD	3' 7"	5' 5"	5' 5"	7' 1"	7' 1"	8' 11"	8' 11"	11' 1"	11' 1"	14' 0"	14' 0"
		STANDARD	3' 7"	4' 8"	4' 8"	6' 1"	6' 1"	8' 3"	8' 3"	9' 6"	9' 6"	12' 11"	12' 11"
	SP DFL	#1	4' 0"	6' 4"	6' 10"	7' 6"	8' 1"	8' 11"	9' 7"	11' 9"	12' 8"	14' 0"	14' 0"
		#2	3' 11"	6' 4"	6' 10"	7' 6"	8' 1"	8' 11"	9' 7"	11' 9"	12' 8"	14' 0"	14' 0"
		#3	3' 9"	5' 7"	5' 7"	7' 4"	7' 4"	8' 11"	9' 5"	11' 5"	11' 5"	14' 0"	14' 0"
		STUD	3' 9"	5' 6"	5' 6"	7' 3"	7' 3"	8' 11"	9' 5"	11' 4"	11' 4"	14' 0"	14' 0"
		STANDARD	3' 8"	4' 9"	4' 9"	6' 3"	6' 3"	8' 5"	8' 5"	9' 9"	9' 9"	13' 3"	14' 0"
16" O.C.	SPF HF	#1 / #2	4' 2"	7' 3"	7' 5"	8' 7"	8' 10"	10' 3"	10' 6"	13' 5"	13' 10"	14' 0"	14' 0"
		#3	4' 1"	6' 8"	6' 8"	8' 7"	8' 7"	10' 3"	10' 3"	13' 5"	13' 5"	14' 0"	14' 0"
		STUD	4' 1"	8' 0"	8' 0"	8' 7"	8' 7"	10' 3"	10' 3"	13' 5"	13' 5"	14' 0"	14' 0"
		STANDARD	4' 1"	5' 8"	5' 8"	7' 6"	7' 6"	10' 1"	10' 1"	11' 8"	11' 8"	14' 0"	14' 0"
	SP DFL	#1	4' 7"	7' 3"	7' 9"	8' 7"	9' 3"	10' 3"	11' 0"	13' 5"	14' 0"	14' 0"	14' 0"
		#2	4' 6"	7' 3"	7' 9"	8' 7"	9' 3"	10' 3"	11' 0"	13' 5"	14' 0"	14' 0"	14' 0"
		#3	4' 4"	6' 10"	6' 10"	8' 7"	9' 0"	10' 3"	10' 9"	13' 5"	14' 0"	14' 0"	14' 0"
		STUD	4' 4"	6' 9"	6' 9"	8' 7"	8' 11"	10' 3"	10' 9"	13' 5"	14' 0"	14' 0"	14' 0"
		STANDARD	4' 2"	5' 10"	5' 10"	7' 8"	7' 8"	10' 3"	10' 4"	11' 11"	11' 11"	14' 0"	14' 0"
12" O.C.	SPF HF	#1 / #2	4' 7"	8' 0"	8' 2"	9' 5"	9' 8"	11' 3"	11' 7"	14' 0"	14' 0"	14' 0"	14' 0"
		#3	4' 6"	7' 8"	7' 8"	9' 5"	9' 5"	11' 3"	11' 3"	14' 0"	14' 0"	14' 0"	14' 0"
		STUD	4' 6"	7' 8"	7' 8"	9' 5"	9' 5"	11' 3"	11' 3"	14' 0"	14' 0"	14' 0"	14' 0"
		STANDARD	4' 6"	6' 7"	6' 7"	8' 8"	8' 8"	11' 3"	11' 3"	13' 6"	13' 6"	14' 0"	14' 0"
	SP DFL	#1	5' 1"	8' 0"	8' 7"	9' 5"	10' 2"	11' 3"	12' 1"	14' 0"	14' 0"	14' 0"	14' 0"
		#2	4' 11"	8' 0"	8' 7"	9' 5"	10' 2"	11' 3"	12' 1"	14' 0"	14' 0"	14' 0"	14' 0"
		#3	4' 9"	7' 11"	7' 11"	9' 5"	9' 11"	11' 3"	11' 10"	14' 0"	14' 0"	14' 0"	14' 0"
		STUD	4' 9"	7' 9"	7' 9"	9' 5"	9' 11"	11' 3"	11' 10"	14' 0"	14' 0"	14' 0"	14' 0"
		STANDARD	4' 7"	6' 9"	6' 9"	8' 10"	8' 10"	11' 3"	11' 7"	13' 10"	13' 10"	14' 0"	14' 0"

BRACING GROUP SPECIES AND GRADES:

GROUP A:

SPRUCE-PINE-FIR

#1 / #2	STANDARD
#3	STUD

HEM-FIR

#2	STUD
#3	STANDARD

DOUGLAS FIR-LARCH

#3
STUD
STANDARD

SOUTHERN PINE

#3
STUD
STANDARD

GROUP B:

HEM-FIR

#1 & BTR
#1

SOUTHERN PINE

#1
#2

DOUGLAS FIR-LARCH

#1
#2

GABLE TRUSS DETAIL NOTES:

LIVE LOAD DEFLECTION CRITERIA IS L/240.

PROVIDE UPLIFT CONNECTIONS FOR 100 PLF OVER CONTINUOUS BEARING (5 PSF TC DEAD LOAD).

GABLE END SUPPORTS LOAD FROM 4' 0" OUTLOOKERS WITH 2' 0" OVERHANG, OR 12" PLYWOOD OVERHANG.

ATTACH EACH "L" BRACE WITH 10d NAILS.
* FOR (1) "L" BRACE: SPACE NAILS AT 2" O.C. IN 18" END ZONES AND 4" O.C. BETWEEN ZONES.
** FOR (2) "L" BRACES: SPACE NAILS AT 3" O.C. IN 18" END ZONES AND 6" O.C. BETWEEN ZONES.

"L" BRACING MUST BE A MINIMUM OF 80% OF WEB MEMBER LENGTH.

GABLE VERTICAL PLATE SIZES

VERTICAL LENGTH	NO SPLICE
LESS THAN 4' 0"	1X4 OR 2X3
GREATER THAN 4' 0", BUT LESS THAN 11' 6"	2X4
GREATER THAN 11' 6"	2.5X4

+ REFER TO COMMON TRUSS DESIGN FOR PEAK, SPLICE, AND HEEL PLATES.

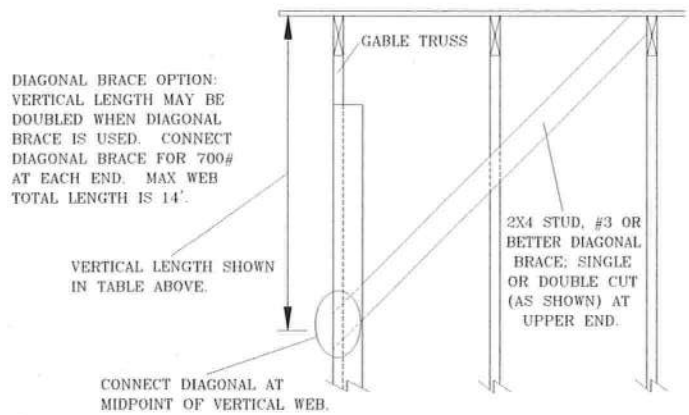

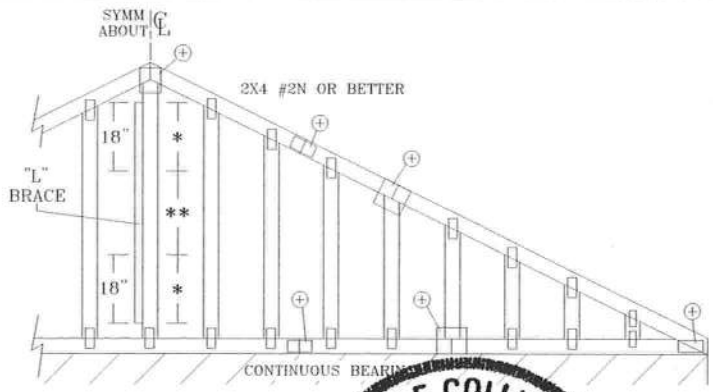

REFER TO CHART ABOVE FOR [illegible] VERTICAL LENGTH.

JAMES F. COLLINS, JR. CERTIFICATE No. 0052212 STATE OF FLORIDA 01/04/2005 PROFESSIONAL ENGINEER

ALPINE

ALPINE ENGINEERED PRODUCTS, INC.
POMPANO BEACH, FLORIDA

WARNING TRUSSES REQUIRE EXTREME CARE IN FABRICATING, HANDLING, SHIPPING, INSTALLING AND BRACING. REFER TO BCSI 1-03 (BUILDING COMPONENT SAFETY INFORMATION), PUBLISHED BY TPI (TRUSS PLATE INSTITUTE, 583 D'ONOFRIO DR., SUITE 200, MADISON, WI 53719) AND WTCA (WOOD TRUSS COUNCIL OF AMERICA, 6300 ENTERPRISE LN, MADISON, WI 53719) FOR SAFETY PRACTICES PRIOR TO PERFORMING THESE FUNCTIONS. UNLESS OTHERWISE INDICATED, TOP CHORD SHALL HAVE PROPERLY ATTACHED STRUCTURAL PANELS AND BOTTOM CHORD SHALL HAVE A PROPERLY ATTACHED RIGID CEILING.

IMPORTANT FURNISH COPY OF THIS DESIGN TO INSTALLATION CONTRACTOR. ALPINE ENGINEERED PRODUCTS, INC., SHALL NOT BE RESPONSIBLE FOR ANY DEVIATION FROM THIS DESIGN; ANY FAILURE TO BUILD THE TRUSS IN CONFORMANCE WITH TPI; OR FABRICATING, HANDLING, SHIPPING, INSTALLING & BRACING OF TRUSSES. DESIGN CONFORMS WITH APPLICABLE PROVISIONS OF NDS (NATIONAL DESIGN SPEC. BY AF&PA) AND TPI. ALPINE CONNECTOR PLATES ARE MADE OF 20/18/16GA (W,H/S/K) ASTM A653 GRADE 40/60 (W,K/H,S) GALV. STEEL. APPLY PLATES TO EACH FACE OF TRUSS AND, UNLESS OTHERWISE LOCATED ON THIS DESIGN, POSITION PER DRAWINGS 160A-Z. ANY INSPECTION OF PLATES FOLLOWED BY (I) SHALL BE PER ANNEX A3 OF TPI 1-2002 SEC. 3. A SEAL ON THIS DRAWING INDICATES ACCEPTANCE OF PROFESSIONAL ENGINEERING RESPONSIBILITY SOLELY FOR THE TRUSS COMPONENT DESIGN SHOWN. THE SUITABILITY AND USE OF THIS COMPONENT FOR ANY BUILDING IS THE RESPONSIBILITY OF THE BUILDING DESIGNER, PER ANSI/TPI 1 SEC. 2.

MAX. TOT. LD. 60 PSF

MAX. SPACING 24.0"

REF	ASCE7-98-GAB11030
DATE	11/26/03
DRWG	A11030EC1103
-ENG	

GABLE DETAIL
FOR LET-IN VERTICALS

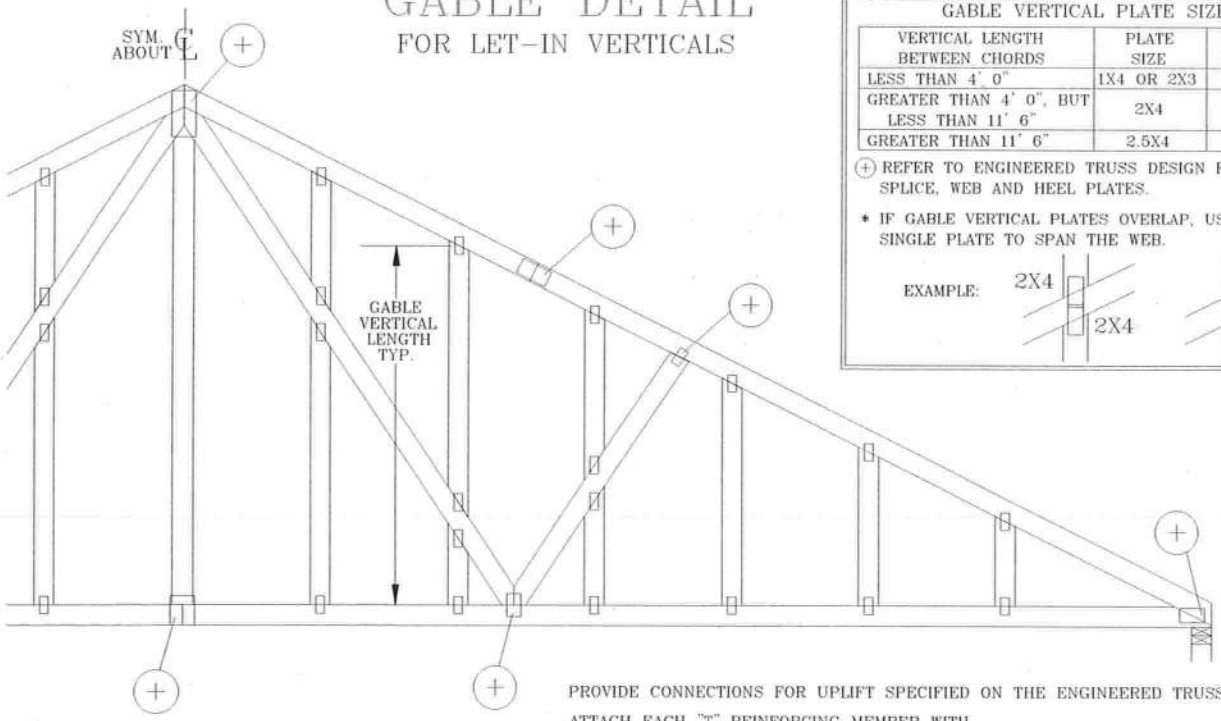

GABLE VERTICAL PLATE SIZES		
VERTICAL LENGTH BETWEEN CHORDS	PLATE SIZE	IF PLATES OVERLAP*
LESS THAN 4' 0"	1X4 OR 2X3	2X8
GREATER THAN 4' 0", BUT LESS THAN 11' 6"	2X4	2X8
GREATER THAN 11' 6"	2.5X4	2.5X8

(+) REFER TO ENGINEERED TRUSS DESIGN FOR PEAK, SPLICE, WEB AND HEEL PLATES.

* IF GABLE VERTICAL PLATES OVERLAP, USE A SINGLE PLATE TO SPAN THE WEB.

EXAMPLE:

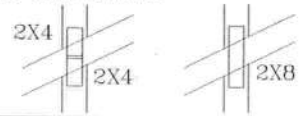

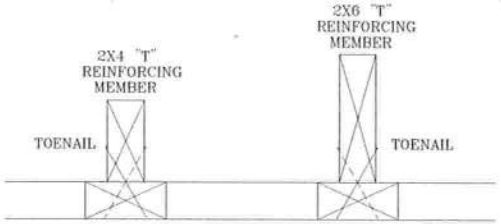

TO CONVERT FROM "L" TO "T" REINFORCING MEMBERS, MULTIPLY "T" FACTOR BY LENGTH (BASED ON GABLE VERTICAL SPECIES, GRADE AND SPACING) FOR (1) 2X4 "L" BRACE, GROUP A, OBTAINED FROM THE APPROPRIATE ALPINE GABLE DETAIL FOR ASCE OR SBCCI WIND LOAD.

MAXIMUM ALLOWABLE "T" REINFORCED GABLE VERTICAL LENGTH IS 14' FROM TOP TO BOTTOM CHORD.

WEB LENGTH INCREASE W/ "T" BRACE

WIND SPEED AND MRH	"T" REINF. MBR. SIZE	SBCCI	ASCE
110 MPH	2x4	10 %	10 %
15 FT	2x6	40 %	50 %
110 MPH	2x4	10 %	10 %
30 FT	2x6	50 %	50 %
100 MPH	2x4	10 %	10 %
15 FT	2x6	30 %	50 %
100 MPH	2x4	10 %	10 %
30 FT	2x6	40 %	40 %
90 MPH	2x4	20 %	10 %
15 FT	2x6	20 %	40 %
90 MPH	2x4	10 %	10 %
30 FT	2x6	30 %	50 %
80 MPH	2x4	10 %	20 %
15 FT	2x6	10 %	30 %
80 MPH	2x4	20 %	10 %
30 FT	2x6	20 %	40 %
70 MPH	2x4	0 %	20 %
15 FT	2x6	0 %	20 %
70 MPH	2x4	10 %	20 %
30 FT	2x6	10 %	30 %

EXAMPLE:
ASCE WIND SPEED = 100 MPH
MEAN ROOF HEIGHT = 30 FT
GABLE VERTICAL = 24" O.C. SP #3
"T" REINFORCING MEMBER SIZE = 2X4
"T" BRACE INCREASE (FROM ABOVE) = 10% = 1.10
(1) 2X4 "L" BRACE LENGTH = 6' 7"
MAXIMUM "T" REINFORCED GABLE VERTICAL LENGTH
1.10 x 6' 7" = 7' 3"

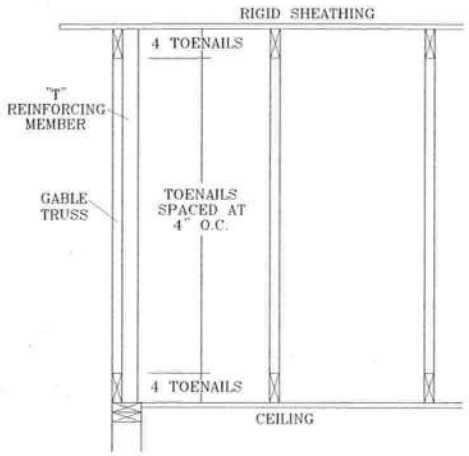

PROVIDE CONNECTIONS FOR UPLIFT SPECIFIED ON THE ENGINEERED TRUSS DESIGN.

ATTACH EACH "T" REINFORCING MEMBER WITH
HAND DRIVEN NAILS:
10d COMMON TOENAILS AT 4" O.C. PLUS (4) 16d COMMON TOENAILS IN TOP AND BOTTOM CHORD.
GUN DRIVEN NAILS - 0.131" X 3":
TOENAILS AT 4" O.C. PLUS (4) TOENAILS IN TOP AND BOTTOM CHORD.

THIS DETAIL TO BE USED WITH THE APPROPRIATE ALPINE GABLE DETAIL FOR ASCE OR SBCCI WIND LOAD.
ASCE 7-93 GABLE DETAIL DRAWINGS
A11015EN1103, A10015EN1103, A09015EN1103, A08015EN1103, A07015EN1103
A11030EN1103, A10030EN1103, A09030EN1103, A08030EN1103, A07030EN1103
ASCE 7-98 GABLE DETAIL DRAWINGS
A13015EC1103, A12015EC1103, A11015EC1103, A10015EC1103, A08515EC1103
A13030EC1103, A12030EC1103, A11030EC1103, A10030EC1103, A08530EC1103
SBCCI GABLE DETAIL DRAWINGS
S11015EN1103, S10015EN1103, S09015EN1103, S08015EN1103, S07015EN1103
S11030EN1103, S10030EN1103, S09030EN1103, S08030EN1103, S07030EN1103

SEE APPROPRIATE ALPINE GABLE DETAIL (ASCE OR SBCCI WIND LOAD) FOR MAXIMUM UNREINFORCED GABLE VERTICAL LENGTH.

JAMES F. COLLINS, JR. CERTIFICATE No. 0052212 STATE OF FLORIDA PROFESSIONAL ENGINEER 04/01/2005

REPLACES DRAWINGS GAB98117 876,719 & HC26294035

ALPINE

ALPINE ENGINEERED PRODUCTS, INC.
POMPANO BEACH, FLORIDA

WARNING TRUSSES REQUIRE EXTREME CARE IN FABRICATING, HANDLING, SHIPPING, INSTALLING AND BRACING. REFER TO BCSI 1-03 (BUILDING COMPONENT SAFETY INFORMATION), PUBLISHED BY TPI (TRUSS PLATE INSTITUTE, 583 D'ONOFRIO DR., SUITE 200, MADISON, WI 53719) AND WTCA (WOOD TRUSS COUNCIL OF AMERICA, 6300 ENTERPRISE LN, MADISON, WI 53719) FOR SAFETY PRACTICES PRIOR TO PERFORMING THESE FUNCTIONS. UNLESS OTHERWISE INDICATED, TOP CHORD SHALL HAVE PROPERLY ATTACHED STRUCTURAL PANELS AND BOTTOM CHORD SHALL HAVE A PROPERLY ATTACHED RIGID CEILING.

IMPORTANT FURNISH COPY OF THIS DESIGN TO INSTALLATION CONTRACTOR. ALPINE ENGINEERED PRODUCTS, INC., SHALL NOT BE RESPONSIBLE FOR ANY DEVIATION FROM THIS DESIGN; ANY FAILURE TO BUILD THE TRUSS IN CONFORMANCE WITH TPI; OR FABRICATING, HANDLING, SHIPPING, INSTALLING & BRACING OF TRUSSES. DESIGN CONFORMS WITH APPLICABLE PROVISIONS OF NDS (NATIONAL DESIGN SPEC. BY AF&PA) AND TPI. ALPINE CONNECTOR PLATES ARE MADE OF 20/18/16GA (W,H/S/K) ASTM A653 GRADE 40/60 (W,K/H,S) GALV. STEEL. APPLY PLATES TO EACH FACE OF TRUSS AND, UNLESS OTHERWISE LOCATED ON THIS DESIGN, POSITION PER DRAWINGS 160A-Z. ANY INSPECTION OF PLATES FOLLOWED BY (+) SHALL BE PER ANNEX A3 OF TPI 1-2002 SEC. 3. A SEAL ON THIS DRAWING INDICATES ACCEPTANCE OF PROFESSIONAL ENGINEERING RESPONSIBILITY SOLELY FOR THE TRUSS COMPONENT DESIGN SHOWN. THE SUITABILITY AND USE OF THIS COMPONENT FOR ANY BUILDING IS THE RESPONSIBILITY OF THE BUILDING DESIGNER, PER ANSI/TPI 1 SEC. 2.

MAX TOT. LD. 60 PSF
DUR. FAC. ANY
MAX SPACING 24.0"

REF	LET-IN VERT
DATE	01/16/04
DRWG	GBLLETIN1103
-ENG	DLJ/KAR

FLORIDA ENERGY EFFICIENCY CODE FOR BUILDING CONSTRUCTION

Florida Department of Community Affairs

Residential Whole Building Performance Method A

Project Name:	**502044StephensonRes**	Builder:	**Edgley Const.**
Address:	**231 SW Bonanza Glen**	Permitting Office:	
City, State:	**Lake City, FL**	Permit Number:	
Owner:	**Stephenson**	Jurisdiction Number:	
Climate Zone:	**North**		

1. New construction or existing		New	
2. Single family or multi-family		Single family	
3. Number of units, if multi-family		1	
4. Number of Bedrooms		3	
5. Is this a worst case?		Yes	
6. Conditioned floor area (ft²)		2282 ft²	
7. Glass area & type	Single Pane	Double Pane	
a. Clear glass, default U-factor	0.0 ft²	205.5 ft²	
b. Default tint, default U-factor	0.0 ft²	0.0 ft²	
c. Labeled U-factor or SHGC	0.0 ft²	0.0 ft²	
8. Floor types			
a. Slab-On-Grade Edge Insulation		R=0.0, 250.0(p) ft	
b. N/A			
c. N/A			
9. Wall types			
a. Face Brick, Wood, Exterior		R=13.0, 1451.0 ft²	
b. Frame, Wood, Exterior		R=13.0, 60.0 ft²	
c. Frame, Wood, Adjacent		R=13.0, 356.0 ft²	
d. N/A			
e. N/A			
10. Ceiling types			
a. Under Attic		R=30.0, 2367.0 ft²	
b. N/A			
c. N/A			
11. Ducts			
a. Sup: Unc. Ret: Unc. AH: Interior		Sup. R=6.0, 200.0 ft	
b. Sup: Unc. Ret: Unc. AH: Interior		Sup. R=6.0, 40.0 ft	

12. Cooling systems		
a. Central Unit	Cap: 35.0 kBtu/hr	
	SEER: 10.00	
b. Central Unit	Cap: 10.0 kBtu/hr	
	SEER: 10.00	
c. N/A		
13. Heating systems		
a. Electric Heat Pump	Cap: 35.0 kBtu/hr	
	HSPF: 7.00	
b. Electric Heat Pump	Cap: 10.0 kBtu/hr	
	HSPF: 7.00	
c. N/A		
14. Hot water systems		
a. Electric Resistance	Cap: 40.0 gallons	
	EF: 0.89	
b. N/A		
c. Conservation credits (HR-Heat recovery, Solar DHP-Dedicated heat pump)		
15. HVAC credits (CF-Ceiling fan, CV-Cross ventilation, HF-Whole house fan, PT-Programmable Thermostat, MZ-C-Multizone cooling, MZ-H-Multizone heating)		

Glass/Floor Area: 0.09

Total as-built points: 29048
Total base points: 32907

PASS

I hereby certify that the plans and specifications covered by this calculation are in compliance with the Florida Energy Code.

PREPARED BY: Evan Beamsley

DATE: 3/2/05

I hereby certify that this building, as designed, is in compliance with the Florida Energy Code.

OWNER/AGENT: _____

DATE: _____

Review of the plans and specifications covered by this calculation indicates compliance with the Florida Energy Code. Before construction is completed this building will be inspected for compliance with Section 553.908 Florida Statutes.

GREAT SEAL OF THE STATE OF FLORIDA — IN GOD WE TRUST

BUILDING OFFICIAL: _____

DATE: _____

SUMMER CALCULATIONS

Residential Whole Building Performance Method A - Details

ADDRESS: **231 SW Bonanza Glen, Lake City, FL,** PERMIT #:

BASE

GLASS TYPES

.18 X Conditioned Floor Area	X BSPM	= Points
.18 2282.0	20.04	8231.6

WALL TYPES	Area	X BSPM	= Points
Adjacent	356.0	0.70	249.2
Exterior	1511.0	1.70	2568.7
Base Total:	**1867.0**		**2817.9**

DOOR TYPES	Area	X BSPM	= Points
Adjacent	20.0	2.40	48.0
Exterior	100.0	6.10	610.0
Base Total:	**120.0**		**658.0**

CEILING TYPES	Area	X BSPM	= Points
Under Attic	2282.0	1.73	3947.9
Base Total:	**2282.0**		**3947.9**

FLOOR TYPES	Area	X BSPM	= Points
Slab	250.0(p)	-37.0	-9250.0
Raised	0.0	0.00	0.0
Base Total:			**-9250.0**

INFILTRATION	Area	X BSPM	= Points
	2282.0	10.21	23299.2

AS-BUILT

Type/SC	Overhang Ornt	Len	Hgt	Area X	SPM X	SOF =	Points
Double, Clear	N	0.0	0.0	20.0	19.20	1.00	384.0
Double, Clear	N	6.5	8.5	20.0	19.20	0.75	289.3
Double, Clear	N	6.5	5.5	12.0	19.20	0.68	157.2
Double, Clear	E	1.5	5.5	10.0	42.06	0.90	377.0
Double, Clear	E	1.5	6.5	15.0	42.06	0.93	584.6
Double, Clear	S	0.0	0.0	30.0	35.87	1.00	1076.0
Double, Clear	S	1.5	6.5	15.0	35.87	0.88	471.7
Double, Clear	S	9.5	6.5	60.0	35.87	0.48	1023.7
Double, Clear	S	9.5	8.5	20.0	35.87	0.50	361.4
Double, Clear	W	1.5	2.5	3.5	38.52	0.67	90.5
As-Built Total:				**205.5**			**4815.3**

Type	R-Value	Area X	SPM =	Points
Face Brick, Wood, Exterior	13.0	1451.0	0.35	507.9
Frame, Wood, Exterior	13.0	60.0	1.50	90.0
Frame, Wood, Adjacent	13.0	356.0	0.60	213.6
As-Built Total:		**1867.0**		**811.4**

Type	Area X	SPM =	Points
Exterior Insulated	60.0	4.10	246.0
Exterior Insulated	40.0	4.10	164.0
Adjacent Insulated	20.0	1.60	32.0
As-Built Total:	**120.0**		**442.0**

Type	R-Value	Area X	SPM X SCM =	Points
Under Attic	30.0	2367.0	1.73 X 1.00	4094.9
As-Built Total:		**2367.0**		**4094.9**

Type	R-Value	Area X	SPM =	Points
Slab-On-Grade Edge Insulation	0.0	250.0(p	-41.20	-10300.0
As-Built Total:		**250.0**		**-10300.0**

Area X	SPM =	Points
2282.0	10.21	23299.2

SUMMER CALCULATIONS

Residential Whole Building Performance Method A - Details

ADDRESS: **231 SW Bonanza Glen, Lake City, FL,** PERMIT #:

BASE				AS-BUILT						
Summer Base Points:			**29704.6**	**Summer As-Built Points:**						**23162.9**
Total Summer Points	X System Multiplier	=	Cooling Points	Total Component	X Cap Ratio	X Duct Multiplier (DM x DSM x AHU)	X System Multiplier	X Credit Multiplier	=	Cooling Points
				23162.9	0.778	(1.090 x 1.147 x 0.91)	0.341	1.000		6995.4
				23162.9	0.222	(1.090 x 1.147 x 0.91)	0.341	1.000		1998.7
29704.6	**0.4266**		**12672.0**	**23162.9**	**1.00**	**1.138**	**0.341**	**1.000**		**8994.1**

WINTER CALCULATIONS

Residential Whole Building Performance Method A - Details

ADDRESS: **231 SW Bonanza Glen, Lake City, FL,** PERMIT #:

BASE

GLASS TYPES .18 X Conditioned Floor Area	X BWPM	= Points
.18 2282.0	12.74	5233.1

WALL TYPES	Area X	BWPM =	Points
Adjacent	356.0	3.60	1281.6
Exterior	1511.0	3.70	5590.7
Base Total:	**1867.0**		**6872.3**

DOOR TYPES	Area X	BWPM =	Points
Adjacent	20.0	11.50	230.0
Exterior	100.0	12.30	1230.0
Base Total:	**120.0**		**1460.0**

CEILING TYPES	Area X	BWPM =	Points
Under Attic	2282.0	2.05	4678.1
Base Total:	**2282.0**		**4678.1**

FLOOR TYPES	Area X	BWPM =	Points
Slab	250.0(p)	8.9	2225.0
Raised	0.0	0.00	0.0
Base Total:			**2225.0**

INFILTRATION	Area X	BWPM =	Points
	2282.0	-0.59	-1346.4

AS-BUILT

Type/SC	Overhang Ornt	Len	Hgt	Area X	WPM X	WOF =	Points
Double, Clear	N	0.0	0.0	20.0	24.58	1.00	491.6
Double, Clear	N	6.5	8.5	20.0	24.58	1.02	498.9
Double, Clear	N	6.5	5.5	12.0	24.58	1.02	301.0
Double, Clear	E	1.5	5.5	10.0	18.79	1.04	195.7
Double, Clear	E	1.5	6.5	15.0	18.79	1.03	290.5
Double, Clear	S	0.0	0.0	30.0	13.30	1.00	398.9
Double, Clear	S	1.5	6.5	15.0	13.30	1.09	218.2
Double, Clear	S	9.5	6.5	60.0	13.30	3.25	2590.0
Double, Clear	S	9.5	8.5	20.0	13.30	2.92	777.4
Double, Clear	W	1.5	2.5	3.5	20.73	1.11	80.3
As-Built Total:				**205.5**			**5842.4**

Type	R-Value	Area X	WPM =	Points
Face Brick, Wood, Exterior	13.0	1451.0	3.17	4606.9
Frame, Wood, Exterior	13.0	60.0	3.40	204.0
Frame, Wood, Adjacent	13.0	356.0	3.30	1174.8
As-Built Total:		**1867.0**		**5985.7**

Type	Area X	WPM =	Points
Exterior Insulated	60.0	8.40	504.0
Exterior Insulated	40.0	8.40	336.0
Adjacent Insulated	20.0	8.00	160.0
As-Built Total:	**120.0**		**1000.0**

Type	R-Value	Area X	WPM X WCM =	Points
Under Attic	30.0	2367.0	2.05 X 1.00	4852.4
As-Built Total:		**2367.0**		**4852.4**

Type	R-Value	Area X	WPM =	Points
Slab-On-Grade Edge Insulation	0.0	250.0(p	18.80	4700.0
As-Built Total:		**250.0**		**4700.0**

Area X	WPM =	Points
2282.0	-0.59	-1346.4

WINTER CALCULATIONS

Residential Whole Building Performance Method A - Details

ADDRESS: **231 SW Bonanza Glen, Lake City, FL,** PERMIT #:

BASE				AS-BUILT						
Winter Base Points:			**19122.1**	**Winter As-Built Points:**						**21034.1**
Total Winter Points	X System Multiplier	=	Heating Points	Total Component	X Cap Ratio	X Duct Multiplier (DM x DSM x AHU)	X System Multiplier	X Credit Multiplier	=	Heating Points
				21034.1	0.778	(1.069 x 1.169 x 0.93)	0.487	1.000		9262.1
				21034.1	0.222	(1.069 x 1.169 x 0.93)	0.487	1.000		2646.3
19122.1	**0.6274**		**11997.2**	**21034.1**	**1.00**	**1.162**	**0.487**	**1.000**		**11908.5**

WATER HEATING & CODE COMPLIANCE STATUS

Residential Whole Building Performance Method A - Details

ADDRESS: **231 SW Bonanza Glen, Lake City, FL,** PERMIT #:

BASE				AS-BUILT							
WATER HEATING											
Number of Bedrooms	X	Multiplier	= Total	Tank Volume	EF	Number of Bedrooms	X Tank Ratio	X Multiplier	X Credit Multiplier	= Total	
3		2746.00	8238.0	40.0	0.89	3	1.00	2715.15	1.00	8145.4	
				As-Built Total:						**8145.4**	

CODE COMPLIANCE STATUS							
BASE				AS-BUILT			
Cooling Points +	Heating Points +	Hot Water Points =	Total Points	Cooling Points +	Heating Points +	Hot Water Points =	Total Points
12672	**11997**	**8238**	**32907**	**8994**	**11908**	**8145**	**29048**

PASS

Code Compliance Checklist

Residential Whole Building Performance Method A - Details

ADDRESS: **231 SW Bonanza Glen, Lake City, FL,** PERMIT #:

6A-21 INFILTRATION REDUCTION COMPLIANCE CHECKLIST

COMPONENTS	SECTION	REQUIREMENTS FOR EACH PRACTICE	CHECK
Exterior Windows & Doors	606.1.ABC.1.1	Maximum:.3 cfm/sq.ft. window area; .5 cfm/sq.ft. door area.	
Exterior & Adjacent Walls	606.1.ABC.1.2.1	Caulk, gasket, weatherstrip or seal between: windows/doors & frames, surrounding wall; foundation & wall sole or sill plate; joints between exterior wall panels at corners; utility penetrations; between wall panels & top/bottom plates; between walls and floor. EXCEPTION: Frame walls where a continuous infiltration barrier is installed that extends from, and is sealed to, the foundation to the top plate.	
Floors	606.1.ABC.1.2.2	Penetrations/openings >1/8" sealed unless backed by truss or joint members. EXCEPTION: Frame floors where a continuous infiltration barrier is installed that is sealed to the perimeter, penetrations and seams.	
Ceilings	606.1.ABC.1.2.3	Between walls & ceilings; penetrations of ceiling plane of top floor; around shafts, chases, soffits, chimneys, cabinets sealed to continuous air barrier; gaps in gyp board & top plate; attic access. EXCEPTION: Frame ceilings where a continuous infiltration barrier is installed that is sealed at the perimeter, at penetrations and seams.	
Recessed Lighting Fixtures	606.1.ABC.1.2.4	Type IC rated with no penetrations, sealed; or Type IC or non-IC rated, installed inside a sealed box with 1/2" clearance & 3" from insulation; or Type IC rated with < 2.0 cfm from conditioned space, tested.	
Multi-story Houses	606.1.ABC.1.2.5	Air barrier on perimeter of floor cavity between floors.	
Additional Infiltration reqts	606.1.ABC.1.3	Exhaust fans vented to outdoors, dampers; combustion space heaters comply with NFPA, have combustion air.	

6A-22 OTHER PRESCRIPTIVE MEASURES (must be met or exceeded by all residences.)

COMPONENTS	SECTION	REQUIREMENTS	CHECK
Water Heaters	612.1	Comply with efficiency requirements in Table 6-12. Switch or clearly marked circuit breaker (electric) or cutoff (gas) must be provided. External or built-in heat trap required.	
Swimming Pools & Spas	612.1	Spas & heated pools must have covers (except solar heated). Non-commercial pools must have a pump timer. Gas spa & pool heaters must have a minimum thermal efficiency of 78%.	
Shower heads	612.1	Water flow must be restricted to no more than 2.5 gallons per minute at 80 PSIG.	
Air Distribution Systems	610.1	All ducts, fittings, mechanical equipment and plenum chambers shall be mechanically attached, sealed, insulated, and installed in accordance with the criteria of Section 610. Ducts in unconditioned attics: R-6 min. insulation.	
HVAC Controls	607.1	Separate readily accessible manual or automatic thermostat for each system.	
Insulation	604.1, 602.1	Ceilings-Min. R-19. Common walls-Frame R-11 or CBS R-3 both sides. Common ceiling & floors R-11.	

ENERGY PERFORMANCE LEVEL (EPL) DISPLAY CARD

ESTIMATED ENERGY PERFORMANCE SCORE* = 85.0

The higher the score, the more efficient the home.

Stephenson, 231 SW Bonanza Glen, Lake City, FL,

1. New construction or existing		New	
2. Single family or multi-family		Single family	
3. Number of units, if multi-family		1	
4. Number of Bedrooms		3	
5. Is this a worst case?		Yes	
6. Conditioned floor area (ft²)		2282 ft²	
7. Glass area & type	Single Pane	Double Pane	
a. Clear glass, default U-factor	0.0 ft²	205.5 ft²	
b. Default tint, default U-factor	0.0 ft²	0.0 ft²	
c. Labeled U-factor or SHGC	0.0 ft²	0.0 ft²	
8. Floor types			
a. Slab-On-Grade Edge Insulation		R=0.0, 250.0(p) ft	
b. N/A			
c. N/A			
9. Wall types			
a. Face Brick, Wood, Exterior		R=13.0, 1451.0 ft²	
b. Frame, Wood, Exterior		R=13.0, 60.0 ft²	
c. Frame, Wood, Adjacent		R=13.0, 356.0 ft²	
d. N/A			
e. N/A			
10. Ceiling types			
a. Under Attic		R=30.0, 2367.0 ft²	
b. N/A			
c. N/A			
11. Ducts			
a. Sup: Unc. Ret: Unc. AH: Interior		Sup. R=6.0, 200.0 ft	
b. Sup: Unc. Ret: Unc. AH: Interior		Sup. R=6.0, 40.0 ft	

12. Cooling systems		
a. Central Unit	Cap: 35.0 kBtu/hr	
	SEER: 10.00	
b. Central Unit	Cap: 10.0 kBtu/hr	
	SEER: 10.00	
c. N/A		
13. Heating systems		
a. Electric Heat Pump	Cap: 35.0 kBtu/hr	
	HSPF: 7.00	
b. Electric Heat Pump	Cap: 10.0 kBtu/hr	
	HSPF: 7.00	
c. N/A		
14. Hot water systems		
a. Electric Resistance	Cap: 40.0 gallons	
	EF: 0.89	
b. N/A		
c. Conservation credits (HR-Heat recovery, Solar DHP-Dedicated heat pump)		
15. HVAC credits (CF-Ceiling fan, CV-Cross ventilation, HF-Whole house fan, PT-Programmable Thermostat, MZ-C-Multizone cooling, MZ-H-Multizone heating)		

I certify that this home has complied with the Florida Energy Efficiency Code For Building Construction through the above energy saving features which will be installed (or exceeded) in this home before final inspection. Otherwise, a new EPL Display Card will be completed based on installed Code compliant features.

Builder Signature: _____ Date: _____

Address of New Home: _____ City/FL Zip: _____

**NOTE: The home's estimated energy performance score is only available through the FLA/RES computer program. This is not a Building Energy Rating. If your score is 80 or greater (or 86 for a US EPA/DOE EnergyStar™ designation), your home may qualify for energy efficiency mortgage (EEM) incentives if you obtain a Florida Energy Gauge Rating. Contact the Energy Gauge Hotline at 321/638-1492 or see the Energy Gauge web site at www.fsec.ucf.edu for information and a list of certified Raters. For information about Florida's Energy Efficiency Code For Building Construction, contact the Department of Community Affairs at 850/487-1824.*

Residential System Sizing Calculation

Summary

Stephenson
231 SW Bonanza Glen
Lake City, FL

Project Title:
502044StephensonRes

Class 3 Rating
Registration No. 0
Climate: North

3/2/2005

Location for weather data: Gainesville - Defaults: Latitude(29) Temp Range(M)
Humidity data: Interior RH (50%) Outdoor wet bulb (77F) Humidity difference(51gr.)

Winter design temperature	31	F	Summer design temperature	93	F
Winter setpoint	70	F	Summer setpoint	75	F
Winter temperature difference	39	F	Summer temperature difference	18	F
Total heating load calculation	**37631**	**Btuh**	**Total cooling load calculation**	**33543**	**Btuh**
Submitted heating capacity	% of calc	Btuh	Submitted cooling capacity	% of calc	Btuh
Total (Electric Heat Pump)	119.6	45000	Sensible (SHR = 0.75)	141.6	33750
Heat Pump + Auxiliary(0.0kW)	119.6	45000	Latent	115.9	11250
			Total (Electric Heat Pump)	134.2	45000

WINTER CALCULATIONS

Winter Heating Load (for 2282 sqft)

Load component			Load	
Window total	206	sqft	5816	Btuh
Wall total	1867	sqft	5254	Btuh
Door total	120	sqft	2021	Btuh
Ceiling total	2367	sqft	3077	Btuh
Floor total	250	ft	7900	Btuh
Infiltration	274	cfm	11771	Btuh
Subtotal			**35839**	**Btuh**
Duct loss			1792	Btuh
TOTAL HEAT LOSS			**37631**	**Btuh**

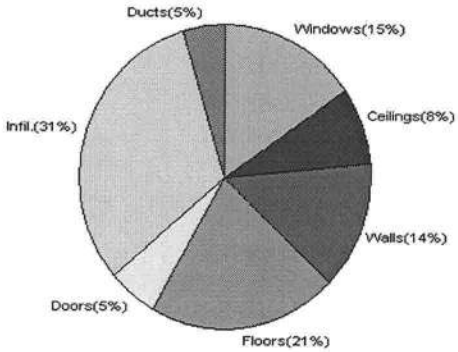

SUMMER CALCULATIONS

Summer Cooling Load (for 2282 sqft)

Load component			Load	
Window total	206	sqft	6338	Btuh
Wall total	1867	sqft	2999	Btuh
Door total	120	sqft	1217	Btuh
Ceiling total	2367	sqft	3361	Btuh
Floor total			0	Btuh
Infiltration	240	cfm	4754	Btuh
Internal gain			3000	Btuh
Subtotal(sensible)			**21669**	**Btuh**
Duct gain			2167	Btuh
Total sensible gain			**23836**	**Btuh**
Latent gain(infiltration)			8326	Btuh
Latent gain(internal)			1380	Btuh
Total latent gain			**9706**	**Btuh**
TOTAL HEAT GAIN			**33543**	**Btuh**

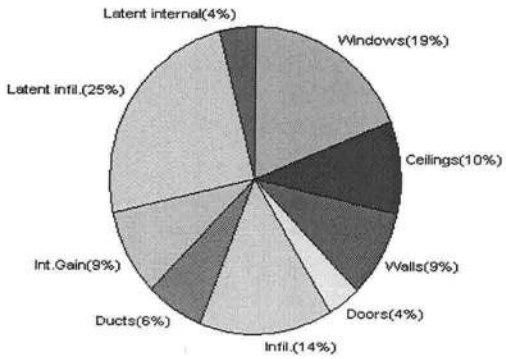

EnergyGauge® System Sizing based on ACCA Manual J.
PREPARED BY: [signature]
DATE: 3/2/05

System Sizing Calculations - Winter

Residential Load - Component Details

Stephenson
231 SW Bonanza Glen
Lake City, FL

Project Title:
502044StephensonRes

Class 3 Rating
Registration No. 0
Climate: North

Reference City: Gainesville (Defaults) Winter Temperature Difference: 39.0 F

3/2/2005

Window	Panes/SHGC/Frame/U	Orientation	Area X	HTM=	Load
1	2, Clear, Metal, DEF	N	20.0	28.3	566 Btuh
2	2, Clear, Metal, DEF	N	20.0	28.3	566 Btuh
3	2, Clear, Metal, DEF	N	12.0	28.3	340 Btuh
4	2, Clear, Metal, DEF	E	10.0	28.3	283 Btuh
5	2, Clear, Metal, DEF	E	15.0	28.3	424 Btuh
6	2, Clear, Metal, DEF	S	30.0	28.3	849 Btuh
7	2, Clear, Metal, DEF	S	15.0	28.3	424 Btuh
8	2, Clear, Metal, DEF	S	60.0	28.3	1698 Btuh
9	2, Clear, Metal, DEF	S	20.0	28.3	566 Btuh
10	2, Clear, Metal, DEF	W	3.5	28.3	99 Btuh
	Window Total		206		5816 Btuh
Walls	Type	R-Value	Area X	HTM=	Load
1	Frame - Exterior	13.0	1451	3.1	4498 Btuh
2	Frame - Exterior	13.0	60	3.1	186 Btuh
3	Frame - Adjacent	13.0	356	1.6	570 Btuh
	Wall Total		1867		5254 Btuh
Doors	Type		Area X	HTM=	Load
1	Insulated - Exter		60	18.3	1100 Btuh
2	Insulated - Exter		40	18.3	733 Btuh
3	Insulated - Adjac		20	9.4	188 Btuh
	Door Total		120		2021Btuh
Ceilings	Type	R-Value	Area X	HTM=	Load
1	Under Attic	30.0	2367	1.3	3077 Btuh
	Ceiling Total		2367		3077Btuh
Floors	Type	R-Value	Size X	HTM=	Load
1	Slab-On-Grade Edge Insul	0	250.0 ft(p)	31.6	7900 Btuh
	Floor Total		250		7900 Btuh
Infiltration	Type	ACH X	Building Volume	CFM=	Load
	Natural	0.80	20538(sqft)	274	11771 Btuh
	Mechanical			0	0 Btuh
	Infiltration Total			274	11771 Btuh

Totals for Heating	**Subtotal**	**35839 Btuh**
	Duct Loss(using duct multiplier of 0.05)	**1792 Btuh**
	Total Btuh Loss	**37631 Btuh**

Manual J Winter Calculations

Residential Load - Component Details (continued)

Stephenson 231 SW Bonanza Glen Lake City, FL	Project Title: 502044StephensonRes	Class 3 Rating Registration No. 0 Climate: North

3/2/2005

Key: Window types (SHGC - Shading coefficient of glass as SHGC numerical value or as clear or tint)
(Frame types - metal, wood or insulated metal)
(U - Window U-Factor or 'DEF' for default)
(HTM - ManualJ Heat Transfer Multiplier)

Key: Floor size (perimeter(p) for slab-on-grade or area for all other floor types)

System Sizing Calculations - Summer

Residential Load - Component Details

Stephenson
231 SW Bonanza Glen
Lake City, FL

Project Title:
502044StephensonRes

Class 3 Rating
Registration No. 0
Climate: North

Reference City: Gainesville (Defaults) Summer Temperature Difference: 18.0 F 3/2/2005

Window	Type Panes/SHGC/U/InSh/ExSh	Ornt	Overhang Len	Overhang Hgt	Window Area(sqft) Gross	Shaded	Unshaded	HTM Shaded	HTM Unshaded	Load
1	2, Clear, DEF, N, N	N	0	0	20.0	0.0	20.0	22	22	440 Btuh
2	2, Clear, DEF, N, N	N	6.5	8.5	20.0	0.0	20.0	22	22	440 Btuh
3	2, Clear, DEF, N, N	N	6.5	5.5	12.0	0.0	12.0	22	22	264 Btuh
4	2, Clear, DEF, N, N	E	1.5	5.5	10.0	0.0	10.0	22	72	720 Btuh
5	2, Clear, DEF, N, N	E	1.5	6.5	15.0	0.0	15.0	22	72	1080 Btuh
6	2, Clear, DEF, N, N	S	0	0	30.0	0.0	30.0	22	37	1110 Btuh
7	2, Clear, DEF, N, N	S	1.5	6.5	15.0	15.0	0.0	22	37	330 Btuh
8	2, Clear, DEF, N, N	S	9.5	6.5	60.0	60.0	0.0	22	37	1320 Btuh
9	2, Clear, DEF, N, N	S	9.5	8.5	20.0	20.0	0.0	22	37	440 Btuh
10	2, Clear, DEF, N, N	W	1.5	2.5	3.5	1.2	2.3	22	72	194 Btuh
	Window Total				206					6338 Btuh

Walls	Type	R-Value	Area	HTM	Load
1	Frame - Exterior	13.0	1451.0	1.7	2525 Btuh
2	Frame - Exterior	13.0	60.0	1.7	104 Btuh
3	Frame - Adjacent	13.0	356.0	1.0	370 Btuh
	Wall Total		1867.0		2999 Btuh

Doors	Type	Area	HTM	Load
1	Insulated - Exter	60.0	10.1	608 Btuh
2	Insulated - Exter	40.0	10.1	406 Btuh
3	Insulated - Adjac	20.0	10.1	203 Btuh
	Door Total	120.0		1217 Btuh

Ceilings	Type/Color	R-Value	Area	HTM	Load
1	Under Attic/Dark	30.0	2367.0	1.4	3361 Btuh
	Ceiling Total		2367.0		3361 Btuh

Floors	Type	R-Value	Size	HTM	Load
1	Slab-On-Grade Edge Insulation	0.0	250.0 ft(p)	0.0	0 Btuh
	Floor Total		250.0		0 Btuh

Infiltration	Type	ACH	Volume	CFM=	Load
	Natural	0.70	20538	240.1	4754 Btuh
	Mechanical			0	0 Btuh
	Infiltration Total			240	4754 Btuh

Internal gain	Occupants	Btuh/occupant	Appliance	Load
	6	X 300 +	1200	3000 Btuh

Manual J Summer Calculations

Residential Load - Component Details (continued)

Stephenson
231 SW Bonanza Glen
Lake City, FL

Project Title:
502044StephensonRes

Class 3 Rating
Registration No. 0
Climate: North

3/2/2005

Totals for Cooling	**Subtotal**	**21669 Btuh**
	Duct gain(using duct multiplier of 0.10)	**2167 Btuh**
	Total sensible gain	**23836 Btuh**
	Latent infiltration gain (for 51 gr. humidity difference)	**8326 Btuh**
	Latent occupant gain (6 people @ 230 Btuh per person)	**1380 Btuh**
	Latent other gain	**0 Btuh**
	TOTAL GAIN	**33543 Btuh**

Key: Window types (SHGC - Shading coefficient of glass as SHGC numerical value or as clear or tint)
(U - Window U-Factor or 'DEF' for default)
(InSh - Interior shading device: none(N), Blinds/Daperies(B) or Roller Shades(R))
(ExSh - Exterior shading device: none(N) or numerical value)
(Ornt - compass orientation)

Z 3695

Cal-Tech Testing, Inc.
- Engineering
- Geotechnical
- Environmental

LABORATORIES

P.O. Box 1625 • Lake City, FL 32056-1625
6919 Distribution Avenue S., Unit #5 • Jacksonville, FL 32257

Tel. (386) 755-3633 • Fax (386) 752-5456
Tel. (904) 262-4046 • Fax (904) 262-4047

JOB NO.: 05-590
DATE TESTED: 11-15-2005
DATE REPORTED: 11-16-2005

REPORT OF IN-PLACE DENSITY TEST

PROJECT:	Stevenson Residence, Cannon Creek Airpark
CLIENT:	Dale's Excavation, 6139 SW SR-47, Lake City, Fl 32024
GENERAL CONTRACTOR:	Dale's Excavation, 6139 SW SR-47, Lake City, Fl 32024
EARTHWORK CONTRACTOR:	Dale's Excavation, 6139 SW SR-47, Lake City, Fl 32024
INSPECTOR:	P Geiger

ASTM METHOD	SOIL USE
(D-2922) Nuclear	BUILDING FILL

SPECIFICATION REQUIREMENTS: 95%

TEST NO.	TEST LOCATION	TEST DEPTH	WET DENSITY (lb/ft³)	MOISTURE PERCENT	DRY DENSITY (lb/ft³)	PROCTOR TEST NO.	PROCTOR VALUE	% MAXIMUM DENSITY
1	36'E X 28'S OF NW CORNER	0-12"	112.6	5.7	106.5	1	109.6	97.2%
2	27' E X 40'S OF NW CORNER	0-12"	113.5	7.9	105.2	1	109.6	96.0%

REMARKS: The Above Tests Meet Specification Requirements.

PROCTORS

PROCTOR NO.	SOIL DESCRIPTION	MAXIMUM DRY UNIT WEIGHT (lb/ft³)	OPT. MOIST.	TYPE
1	Grey Sand w/Limerock	109.6	9.8	MODIFIED (ASTM D-1557)

Respectfully Submitted,
CAL-TECH TESTING, INC.

Linda Creamer

Linda M. Creamer
President - CEO

Reviewed By:

Date: 11/22/05
Florida Registration No: 52612

The test results presented in this report are specific only to the samples tested at the time of testing. The tests were performed in accordance with generally accepted methods and standards. Since material conditions can vary between test locations and change with time, sound judgement should be exercised with regard to the use and interpretation of the data.