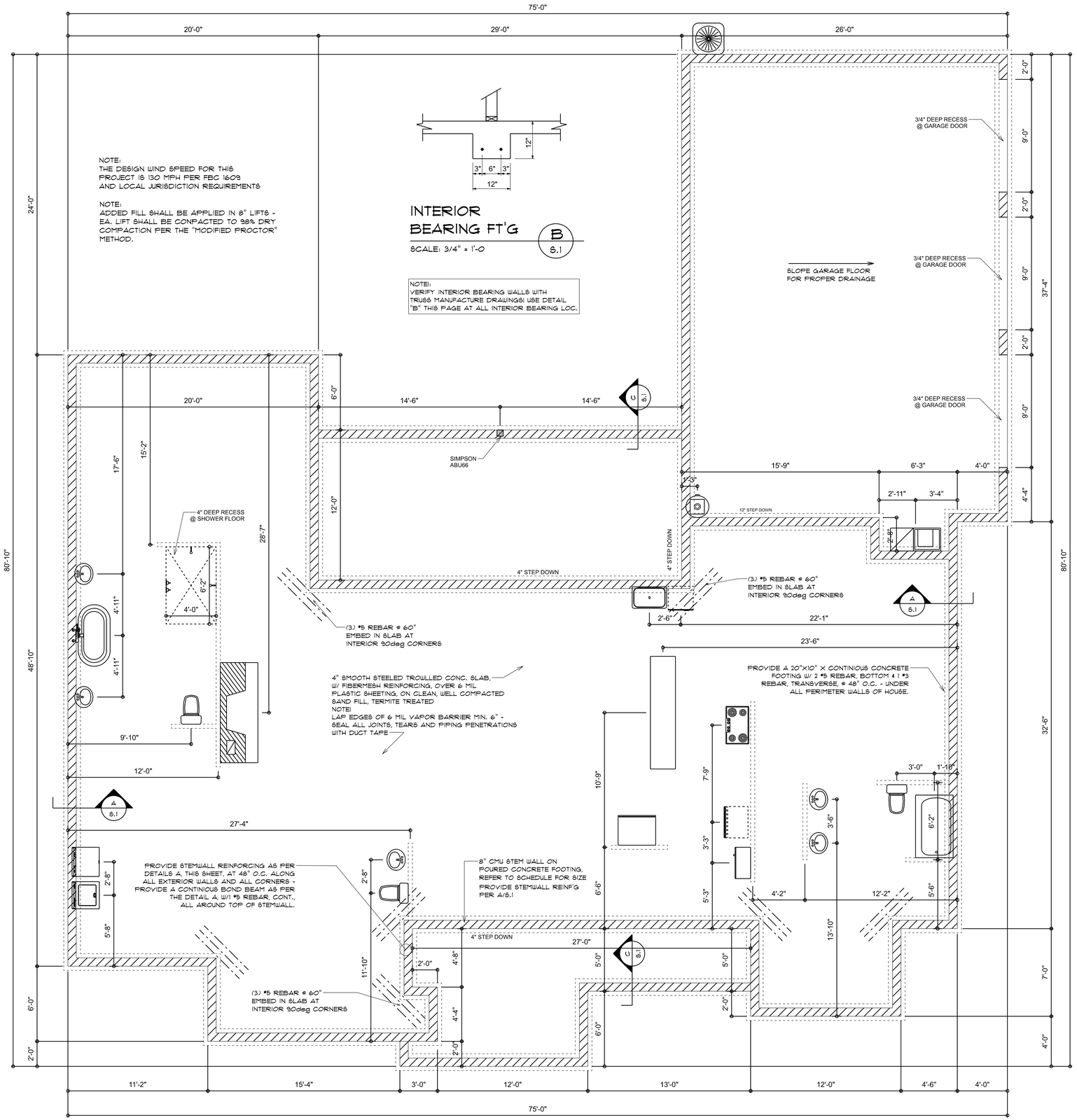

FOUNDATION PLAN

SCALE: 1/4" = 1'-0"

CONCRETE / MASONRY / METALS GENERAL NOTES:

1. DESIGN SOIL BEARING PRESSURE: 1500 PSF.
2. EXPANSIVE SOILS: WHERE DIRECTED BY THE SOILS ENGINEER, SOIL AUGMENTATION PER THE SOILS ENGINEER'S SPECIFICATIONS SHALL BE IMPLEMENTED PRIOR TO PLACING ANY FOUNDATIONS - TESTS AS SPECIFIED SHALL BE PREFORMED TO DETERMINE THE SUITABILITY OF THE SUB-GRADE TO SUPPORT THE DESIGN LOADS.
3. CLEAN SAND FILL OVER STRIPPED AND COMPACTED EXISTING GD. SHALL BE PLACED IN 12" LIFTS. BOTH SUB-SOIL AND FILL COMPACTION SHALL BE NOT LESS THAN 98% AS MEASURED BY A MODIFIED PROCTOR TEST AT THE RATE OF ONE TEST FOR EACH 1500 SF OF BUILDING PAD AREA, OR FRACTION THEREOF, FOR EACH 12" LIFT.
4. REINFORCING STEEL SHALL BE GRADE 60 AND MEET THE REQUIREMENTS OF ASTM A615, ALL BENDS SHALL BE MADE COLD.
5. WELDED WIRE MESH SLAB REINFORCING SHALL MEET THE REQUIREMENTS OF ASTM A185 - MIN. YEILD STRESS = 85 KSI.
6. CONCRETE SHALL BE STANDARD MIX F'c = 3000 PSI FOR ALL FTGS, SLABS, COLUMNS AND BEAMS OR SHALL BE STANDARD PUMP MIX F'c = 3000 PSI. STRENGTH SHALL BE ATTAINED WITHIN 28 DAYS OF PLACEMENT. MIXING, PLACING AND FINISHING SHALL BE AS PER ACI STANDARDS.
7. CONCRETE BLOCK SHALL BE AS PER MANUFACTURER'S PRODUCT GUIDE FOR ASTM C-90 REQUIREMENTS WITH MEDIUM SURFACE FINISH - F'm = 1500 PSI.
8. MORTAR SHALL BE TYPE "M" OR "N" FOR ALL MASONRY UNITS.
9. STRUCTURAL STEEL SHALL CONFORM TO ASTM A36 STANDARDS FOR STRENGTH, BOLTS SHALL BE ASTM A307 / GRADE 1 OR A325, AS PER PLAN REQUIREMENTS.
10. WELDS SHALL BE AS PER "AMERICAN WELDING SOCIETY" STANDARDS FOR STRUCTURAL STEEL APPLICATIONS.
11. 2X4 P/T WOOD SILL, CONT., ALL AROUND, W/ 5/8"~ A.B. W/ 3" SQ. X 1/4" PLATE WASHERS WITHIN 12-16" FROM EACH CORNER, EA. WAY, & WITHIN 8-12" FROM ALL WALL OPENINGS / ENDS - 1/2"~ A.B. W/ 2" SQ. WASHERS ALONG EACH RUN @ 48" O.C., MAX. - ALL ANCHOR BOLTS SHALL HAVE A MINIMUM OF 8" EMBEDMENT INTO THE CONCRETE.

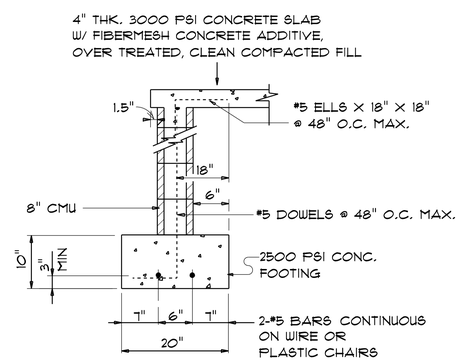

PORCH / CARPORT STEMWALL DETAIL

C
S.1

SCALE: 3/4" = 1'-0

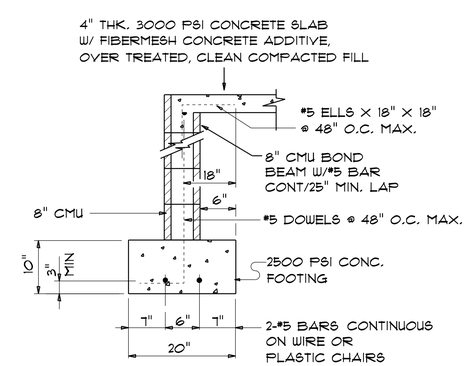

SECTION

A
S.1

SCALE: 3/4" = 1'-0

THIS DOCUMENT HAS BEEN DIGITALLY SIGNED AND SEALED. PRINTED COPIES OF THIS DOCUMENT ARE NOT CONSIDERED SIGNED AND SEALED. THE SIGNATURE MUST BE VERIFIED ON ANY ELECTRONIC COPIES OF THIS DOCUMENT

REVISIONS
Aug. 27th, 2025

FOREST COUNTRY MODEL HOME

SPARKS CONSTRUCTION

LAKE CITY, FL

NICHOLAS PAUL GEISLER ARCHITECT
N.C.A.R.B. Certified
1756 NW Brown Rd.
Lake City, FL 32055

SHEET NUMBER

S.1

OF 4 SHEETS

Nicholas Geisler

Digitally signed by Nicholas Geisler
Date: 2025.09.10 14:37:54 -04'00'

AR0007005