COMPONENT DESIGN DRAWINGS & DETAILS

Simpson Strong-Tie Company, Inc.

5956 W. Las Positas Blvd.
Pleasanton, CA 94588
(800) 999-5099
www.strongtie.com

Prepared for:	19 Lumber Inc
Project:	P-1038 - Martinez
Date:	6/1/2026 9:36 AM
Project Location:	Project location has not been provided.
SST Project (TID):	318742

Paul Mark Bove, State of Florida, Professional Engineer, License No. 97028

This item has been digitally signed and sealed by Paul Mark Bove on the date indicated here. 2026.06.03 09:09:59-05'00'

Printed copies of this document are not considered signed and sealed and the signature must be verified on any electronic copies.

Notes:

1. The component design drawings referenced below have been prepared based on design criteria and requirements set forth in the Construction Documents, as communicated by the Component Manufacturer.
2. The engineer's signature on these drawings indicates professional engineering responsibility solely for the individual components to be able to resist the design loads indicated, utilizing all the design parameter and materials indicated or referenced on each individual design.
3. It is the Building Designer's responsibility to review the component design drawings to insure compatibility with the Building design, Refer to all notes on the individual component design drawings.

47 Component Design Drawing(s):

1-G01: SID 4280704	13-PB02: SID 4280716	25-T10: SID 4280728	37-V13: SID 4280740
2-G02: SID 4280705	14-S01: SID 4280717	26-T18: SID 4280729	38-V14: SID 4280741
3-G03: SID 4280706	15-S02: SID 4280718	27-T19: SID 4280730	39-V15: SID 4280742
4-G04: SID 4280707	16-T01: SID 4280719	28-T20: SID 4280731	40-V16: SID 4280743
5-G05: SID 4280708	17-T02: SID 4280720	29-V05: SID 4280732	41-V17: SID 4280744
6-G06: SID 4280709	18-T03: SID 4280721	30-V06: SID 4280733	42-V18: SID 4280745
7-G07: SID 4280710	19-T04: SID 4280722	31-V07: SID 4280734	43-V19: SID 4280746
8-G08: SID 4280711	20-T05: SID 4280723	32-V08: SID 4280735	44-V20: SID 4280747
9-G10: SID 4280712	21-T06: SID 4280724	33-V09: SID 4280736	45-V21: SID 4280748
10-GR02: SID 4280713	22-T07: SID 4280725	34-V10: SID 4280737	46-V22: SID 4280749
11-M01: SID 4280714	23-T08: SID 4280726	35-V11: SID 4280738	47-V23: SID 4280750
12-PB01: SID 4280715	24-T09: SID 4280727	36-V12: SID 4280739	

Columbia County Building Department
Plans Reviewed for Code Compliance
State of Florida

Component Solutions™ Important Information & General Notes

General Notes

1. Each Truss Design Drawing (TDD) provided with this sheet has been prepared in conformance with ANSI/TPI 1. Refer to ANSI/TPI 1 Chapter 2 for the responsibilities of all parties involved, which include but are not limited to the responsibilities listed on this sheet, and for the definitions of all capitalized terms referenced in this document.
2. TDDs should not be assumed to be to scale.
3. The Contractor and Building Designer shall review and approve the Truss Submittal Package.
4. The suitability and use of the component depicted on the TDD for any particular building design is the responsibility of the Building Designer.
5. The Building Designer is responsible for the anchorage of the truss at all bearing locations as required to resist uplift, gravity and lateral loads, and for all Truss-to-Structural Element connections except Truss-to-Truss connections.
6. The Building Designer shall ensure that the supporting structure can accommodate the vertical and/or horizontal truss deflections.
7. Unless specifically stated otherwise, each Design assumes trusses will be adequately protected from the environment and will not be used in corrosive environments unless protected using an approved method. This includes not being used in locations where the sustained temperature is greater than 150°F.
8. Trusses are designed to carry loads within their plane. Any out-of-plane loads must be resisted by the Permanent Building Stability Bracing.
9. Design dead loads must account for all materials, including self-weight. The TDD notes will indicate the min. pitch above which the dead loads are automatically increased for pitch effects.
10. Trusses installed with roof slopes less than 0.25/12 may experience (but are not designed for) ponding. The Building Designer must ensure that adequate drainage is provided to prevent ponding.
11. Camber is a non-structural consideration and is the responsibility of truss fabricator.

Handling, Installing, Restraint & Bracing

1. The Contractor is responsible for the proper handling, erection, restraint and bracing of the Trusses. In lieu of job-specific details, refer to BCSI.
2. ANSI/TPI 1 stipulates that for trusses spanning 60' or greater, the Owner shall contract with any Registered Design Professional for the design and inspection of the temporary and permanent truss restraint and bracing. Simpson Strong-Tie is not responsible for providing these services.
3. Trusses require permanent lateral restraint to be applied to chords and certain web members (when indicated) at the locations or intervals indicated on the TDD. Web restraints are to be located at mid points, or third points of the member and chord purlins are not to exceed the spacing specified by the TDD. Chords shown without bracing indicated are assumed to be continuously braced by sheathing or drywall. Permanent lateral restraint shall be accomplished in accordance with: standard industry lateral restraint/bracing details in BCSI-B3 or BCSI-B7, supplemental bracing details referenced on the TDD, or as specified in a project-specific truss permanent bracing plan provided by the Building Designer.
4. Additional building stability permanent bracing shall be installed as specified in the Construction Documents.
5. Special end wall bracing design considerations may be required if a flat gable end frame is used with adjacent trusses that have sloped bottom chords (see BCSI-B3).
6. Do not cut, drill, trim, or otherwise alter truss members or plates without prior written approval of an engineer, unless specifically noted on the TDD.
7. Piggyback assemblies shall be braced as per BCSI-B3 unless otherwise specified in the Construction Documents.
8. For floor trusses, when specified, Strongbacking shall be installed per BCSI-B7 unless otherwise specified in the Construction Documents.
9. For IBC 2021 and newer, truss chords without a diaphragm require a project specific bracing design prepared by a registered design professional.

Symbols and Nomenclature

5x7 Plate size; the first digit is the plate width (perp. to the slots) and the second digit is the plate length (parallel to the slots).

5x7-18 -18, -18S5, or -18S6 following the plate size indicates different 18 gauge plate types.

II = These symbols following the plate size indicate the direction of the plate length (and tooth slots) for square and nearly square plates.

10-3-14 Dimensions are shown in feet-inches-sixteenths (for this example, the dimension is 10'-3 14/16").

Joints are numbered left to right, first along the top chord and then along the bottom chord. Mid-panel splice joint numbers are not shown on the drawing. Members are identified using their end joint numbers (e.g., TC 2-3).

When this symbol is shown, permanent lateral restraint is required. Lateral restraint may be applied to either edge of the member. See Note 3 under Handling, Installing, Restraint & Bracing for more information.

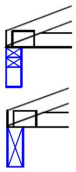

Bearing supports (wall, beam, etc.), locations at which the truss is required to have full bearing. Minimum required bearing width for the given reactions are reported on the TDD. Required bearing widths are based on the truss material and indicated PSI of the support material. The Building Designer is responsible for verifying that the capacity of the support material exceeds the indicated PSI, and for all other bearing design considerations.

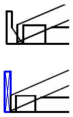

Truss-to-Truss or Truss-to-Structural Element connection, which require a hanger or other structural connection (e.g., toe-nail) that has adequate capacity to resist the maximum reactions specified in the Reaction Summary. Structural connection type is not limited by type shown on TDD. Toe-nails may be used where hanger type shown where allowed by detail or other connection design information. Design of the Structural Element and the connection of the Truss to a Structural Element is by others.

Note: These symbols are for graphical interpretation only; they are not intended to give any indication of the geometry requirements of the actual item that is represented.

Materials and Fabrication

1. Design assumes truss is manufactured in accordance with the TDD and the quality criteria in ANSI/TPI 1 Chapter 3, unless more restrictive criteria are part of the contract specifications.
2. Unless specifically stated, lumber shall not exceed 19% moisture content at time of fabrication or in service.
3. Design is not applicable for use with fire retardant, preservative treated or green lumber unless specifically stated on the TDD.
4. Plate type, size, orientation and location indicated are based on the specified design parameters. Larger plate sizes may be substituted in accordance with ANSI/TPI, Section 3.6.3. Plates shall be embedded within ANSI/TPI 1 tolerances on both faces of the truss at each joint, unless noted otherwise.
5. Truss plates shall be centered on the joint unless otherwise specified.

Referenced Standards

ANSI/TPI 1: National Design Standard for Metal Plate Connected Wood Truss Construction, a Truss Plate Institute publication (www.tpinst.org).

BCSI: Guide to Good Practice for Handling, Installing, Restraining & Bracing Metal Plate Connected Wood Trusses, a joint publication of the Truss Plate Institute (www.tpinst.org) and the Structural Building Components Association (www.sbcindustry.com).

DSB-89 Recommended Design Specification for Temporary Bracing of Metal Plate Connected Wood Trusses, a Truss Plate Institute publication (www.tpinst.org).
NDS: National Design Specification for Wood Construction published by American Forest & Paper Association and American Wood Council.
ESR-2762 Simpson Strong-Tie® AS Truss Plates are covered under ESR-2762 published by the International Code Council Evaluation Service (www.icc-es.org).

Project: P-1038 - Martinez		Truss ID: G01	
Truss Mfr Customer: Turnsole Builders	19 Lumber Inc	Plies: 1	SID: 0004280704
Truss Mfr Contact: Monica Register		Spacing: 2-00-00 o.c.	TID: 318742
Project Location: Project location has not been provided		Quantity: 1	Date: 06 / 01 / 26
Project Note(s):		Weight: 139.3 lb	Page: 1 of 1

TC Plate offsets (X,Y): None

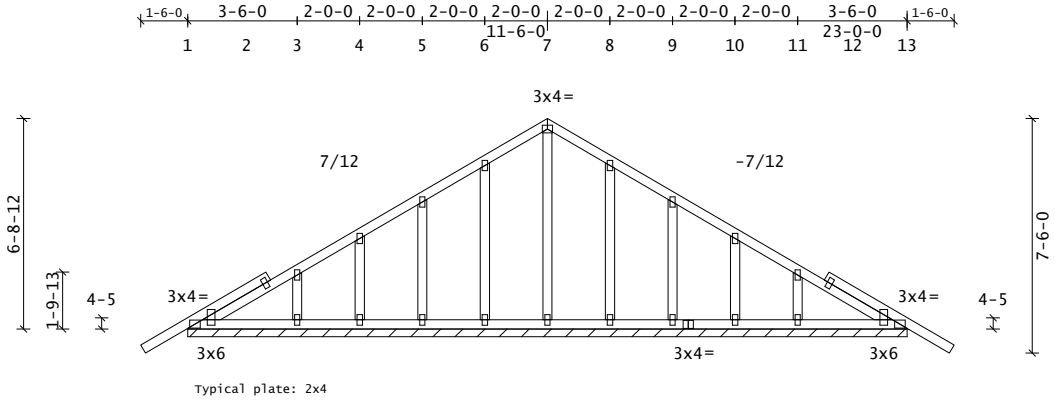

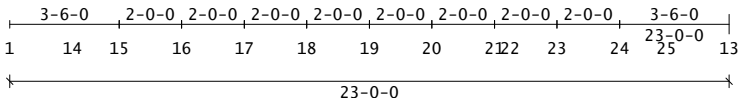

BC Plate offsets (X,Y): None

FBC-2023 | ASCE7-22 | TPI 1-2014

PSF	Live	Dead	Load Duration Factors		
TC	20.0	10.0	Live	Snow	Wind
BC	0.0	10.0	Lbr 1.25	N/A	1.60
Total		40.0	Plt 1.25	N/A	1.60
OH Soffit		2.0			

Spacing: 2-00-00 o.c. Plies: 1
Repetitive Member Increase: Yes
Green Lbr: No | Temp: T ≤ 100˚
Treated Lbr: No | Incised Lbr: No
Seasoned Lbr: Yes | Wet Service: No

Roof Snow Load (Pf) = N/A

Wind Speed (Vult) = 140 mph

Risk Category: II (I = 1.00)
Exposure Category: C
Bldg Dims: L = 61.0 ft B = 59.7 ft
MRH(h)= 18.0ft Kzt = 1.00 Ke = 1.00
Bldg Type: Enclosed
Wind DL (psf): TC = 5.0 BC = 5.0
End Vertical Exposed: L = Yes R = Yes
C&C Location: End Zone | a = 5-11-10
Design: MWFRS/C&C | Reactions: MWFRS
Net Uplift: 0.0 psf

Additional Live Load Checks

10 psf Non-Concurrent BCLL:	Yes
20 psf BCLL Limited Storage:	Yes
200 lb Moving BCLL Access:	No
300 lb Moving TCLL Maintenance:	No
300 lb TCLL/BCLL Person Loading:	No
2000 lb Moving TCLL Office:	No
Partial Length TCLL:	Yes

Plate Tolerance Checks

Fabrication: 20% (Cq = 0.80), u.n.o.
Rotation: +/- 10 degrees, u.n.o.

Material Summary

UTC	2x4	SYP	#2
LTC	2x4	SYP	#2
BC	2x4	SYP	#2
Webs	2x4	SYP	#2

Member Forces Summary (lb)

Max CSI in TC PANEL	1 - 1	0.21
Max CSI in BC PANEL	1 - 14	0.11
Max CSI in Web	19 - 7	0.07

Mbr	Jnt-Jnt	Tens	Comp	CSI
TC	OH- 1	49	0	0.21
	1- 7	90	132	0.08
	7-13	90	132	0.08
	13-OH	49	0	0.21
BC	1-22	167	102	0.11
	13-22	167	102	0.11
Web	3-15	118	146	0.02
	4-16	88	116	0.02
	5-17	98	120	0.03
	6-18	90	127	0.06
	7-19	29	99	0.07
	8-20	90	127	0.06
	9-21	98	120	0.03
	10-23	88	116	0.02
	11-24	118	146	0.02

Reaction Summary (lb, u.n.o.)

	Maximum	LDF	Minimum	LDF
Horizontal @ Jnt 19:	224	1.60	-224	1.60
Jnt 1 - Jnt 13 (plf):	88	1.25	27	1.60

Reactions not shown: < 400 > -150

Loads Summary

- User-defined unbalanced Top Chord Live Loads (TCLL) occurring at 11-06-00 are based on 1.00 full and 0.00 reduced load factors.
- See Loadcase Report for load combinations and additional details.

Design Notes

- Plates designed for Cq at 0.80 and Rotational Tolerance of 10.0 degrees.
- Plates located at TC pitch breaks meet the prescriptive minimum size requirement to transfer unblocked diaphragm loads across those joints.

Installation Notes

- If this truss is exposed to wind load perpendicular to the plane of the truss, gable studs must be braced according to the Construction Documents, BCSI-B3, or a gable stud bracing detail matching the design wind speed shown. Lateral bracing of the truss itself to resist out-of-plane wind load must be in accordance with the Construction Documents.
- The maximum rake overhang length is 12.0".
- Gable requires 7/16" OSB sheathing on front from 0-00-00 to 23-00-00; connection details to be provided by the Building Designer.

Deflection Summary

Creep (Kcr) = 2.00

TrussSpan	Limit	Actual(in)	Location
Vert LL	L/240	L/999(0.00)	1-14
Vert DL	L/120	L/999(0.00)	1-14
Vert CR	L/180	L/999(0.00)	1-14
Horz LL	0.75in	(0.00)	@Jt13
Horz CR	1.25in	(0.00)	@Jt13
Ohng CR	2L/180	2L/999(0.01)	1- 1
Ohng CR	2L/180	2L/999(0.01)	13-13

Bracing Summary

Top Chord: Structural Wood Sheathing
Bot Chord: Gypsum Board Sheathing
Web(s): None;

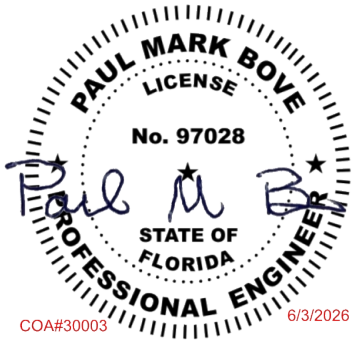

COA#30003 6/3/2026

NOTICE A copy of this design shall be furnished to the erection contractor. The design of this individual truss is based on design criteria and requirements supplied by the Truss Manufacturer and relies upon the accuracy and completeness of the information set forth by the Building Designer. A seal on this drawing indicates acceptance of professional engineering responsibility solely for the truss component design shown. See the cover page and the "Important Information & General Notes" page for additional information. All connector plates shall be manufactured by Simpson Strong-Tie Company, Inc in accordance with ESR-2762. All connector plates are 20 gauge, unless the specified plate size is followed by a "-18" which indicates an 18 gauge plate, or "S# 18", which indicates a high tension 18 gauge plate.

SIMPSON Strong-Tie
Component Solutions
Truss Studio V
2026.3.0.65
Helpdesk: 1-866-252-8606
CSHelp@strongtie.com

EngDrwg: 2026.3.1.0_PM

Project: P-1038 - Martinez		Truss ID: G02	
Truss Mfr Customer: Turnsole Builders	19 Lumber Inc	Plies: 1	SID: 0004280705
Truss Mfr Contact: Monica Register		Spacing: 2-00-00 o.c.	TID: 318742
Project Location: Project location has not been provided		Quantity: 1	Date: 06 / 01 / 26
Project Note(s):		Weight: 71.2 lb	Page: 1 of 1

TC Plate offsets (X,Y): None

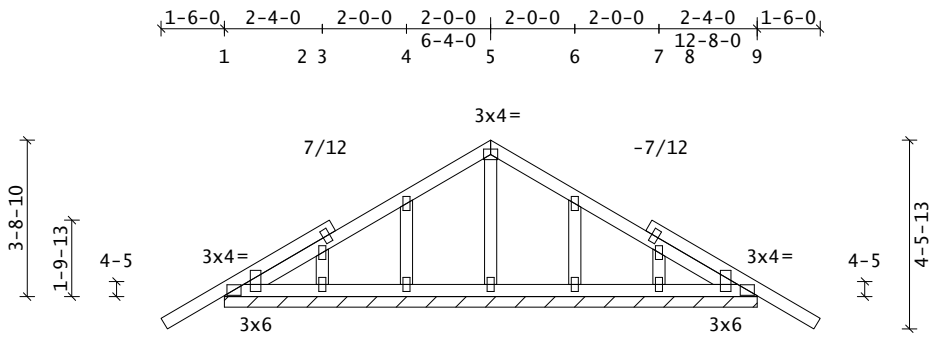

Typical plate: 2x4

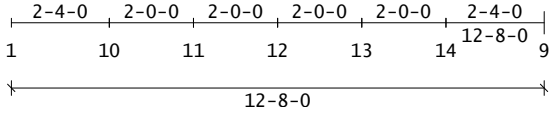

BC Plate offsets (X,Y): None

FBC-2023 | ASCE7-22 | TPI 1-2014

PSF	Live	Dead	Load Duration Factors		
TC	20.0	10.0	Live	Snow	Wind
BC	0.0	10.0	Lbr 1.25	N/A	1.60
Total		40.0	Plt 1.25	N/A	1.60
OH Soffit		2.0			

Spacing: 2-00-00 o.c. Plies: 1
Repetitive Member Increase: Yes
Green Lbr: No | Temp: T ≤ 100˚
Treated Lbr: No | Incised Lbr: No
Seasoned Lbr: Yes | Wet Service: No

Roof Snow Load (Pf) = N/A

Wind Speed (Vult) = 140 mph

Risk Category: II (I = 1.00)
Exposure Category: C
Bldg Dims: L = 61.0 ft B = 59.7 ft
MRH(h)= 18.0ft Kzt = 1.00 Ke = 1.00
Bldg Type: Enclosed
Wind DL (psf): TC = 5.0 BC = 5.0
End Vertical Exposed: L = Yes R = Yes
C&C Location: End Zone | a = 5-11-10
Design: MWFRS/C&C | Reactions: MWFRS
Net Uplift: 0.0 psf

Additional Live Load Checks

10 psf Non-Concurrent BCLL:	Yes
20 psf BCLL Limited Storage:	Yes
200 lb Moving BCLL Access:	No
300 lb Moving TCLL Maintenance:	No
300 lb TCLL/BCLL Person Loading:	No
2000 lb Moving TCLL Office:	No
Partial Length TCLL:	Yes

Plate Tolerance Checks

Fabrication: 20% (Cq = 0.80), u.n.o.
Rotation: +/- 10 degrees, u.n.o.

Material Summary

UTC	2x4	SYP	#2
LTC	2x4	SYP	#2
BC	2x4	SYP	#2
Webs	2x4	SYP	#2

Member Forces Summary (lb)

Max CSI in TC PANEL	1 - 1	0.29
Max CSI in BC PANEL	1 - 10	0.17
Max CSI in Web	11 - 4	0.03

Mbr	Jnt-Jnt	Tens	Comp	CSI
TC	OH- 1	49	0	0.29
	1- 5	50	63	0.09
	5- 9	50	63	0.09
	9-OH	49	0	0.29
BC	1- 9	99	72	0.17
Web	3-10	78	98	0.02
	4-11	102	137	0.03
	5-12	0	100	0.02
	6-13	102	137	0.03
	7-14	78	98	0.02

Reaction Summary (lb, u.n.o.)

	Maximum	LDF	Minimum	LDF
Horizontal @ Jnt 12:	122	1.60	-122	1.60
Jnt 1 - Jnt 9 (plf):	95	1.25	30	1.60

Reactions not shown: < 400 > -150

Loads Summary

- User-defined unbalanced Top Chord Live Loads (TCLL) occurring at 6-04-00 are based on 1.00 full and 0.00 reduced load factors.
- See Loadcase Report for load combinations and additional details.

Design Notes

- Plates designed for Cq at 0.80 and Rotational Tolerance of 10.0 degrees.
- Plates located at TC pitch breaks meet the prescriptive minimum size requirement to transfer unblocked diaphragm loads across those joints.
- Lumber and plating have been applied symmetrically.

Installation Notes

- If this truss is exposed to wind load perpendicular to the plane of the truss, gable studs must be braced according to the Construction Documents, BCSI-B3, or a gable stud bracing detail matching the design wind speed shown. Lateral bracing of the truss itself to resist out-of-plane wind load must be in accordance with the Construction Documents.
- The maximum rake overhang length is 12.0".
- Gable requires 7/16" OSB sheathing on front from 0-00-00 to 12-08-00; connection details to be provided by the Building Designer.

Deflection Summary

Creep (Kcr) = 2.00

TrussSpan	Limit	Actual(in)	Location
Vert LL	L/240	L/999(0.00)	1-10
Vert DL	L/120	L/999(0.00)	1-10
Vert CR	L/180	L/999(0.00)	1-10
Horz LL	0.75in	(0.00)	@Jt 1
Horz CR	1.25in	(0.00)	@Jt 1
Ohng CR	2L/180	2L/999(0.02)	1- 1
Ohng CR	2L/180	2L/999(0.02)	9- 9

Bracing Summary

Top Chord: Structural Wood Sheathing
Bot Chord: Gypsum Board Sheathing
Web(s): None;

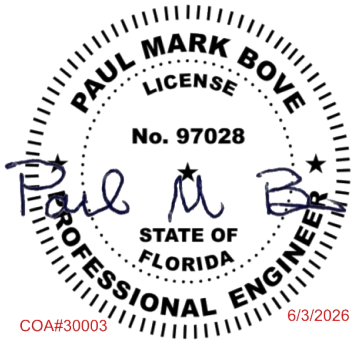

COA#30003 6/3/2026

NOTICE A copy of this design shall be furnished to the erection contractor. The design of this individual truss is based on design criteria and requirements supplied by the Truss Manufacturer and relies upon the accuracy and completeness of the information set forth by the Building Designer. A seal on this drawing indicates acceptance of professional engineering responsibility solely for the truss component design shown. See the cover page and the "Important Information & General Notes" page for additional information. All connector plates shall be manufactured by Simpson Strong-Tie Company, Inc in accordance with ESR-2762. All connector plates are 20 gauge, unless the specified plate size is followed by a "-18" which indicates an 18 gauge plate, or "S# 18", which indicates a high tension 18 gauge plate.

SIMPSON Strong-Tie
Component Solutions
Truss Studio V
2026.3.0.65
Helpdesk: 1-866-252-8606
CSHelp@strongtie.com

EngDrwg: 2026.3.1.0_PM

Project: P-1038 - Martinez		Truss ID: G03		
Truss Mfr Customer: Turnsole Builders	19 Lumber Inc	Plies: 1	SID:	0004280706
Truss Mfr Contact: Monica Register		Spacing: 2-00-00 o.c.	TID:	318742
Project Location: Project location has not been provided		Quantity: 1	Date:	06 / 01 / 26
Project Note(s):		Weight: 158.4 lb	Page:	1 of 1

TC Plate offsets (X,Y): None

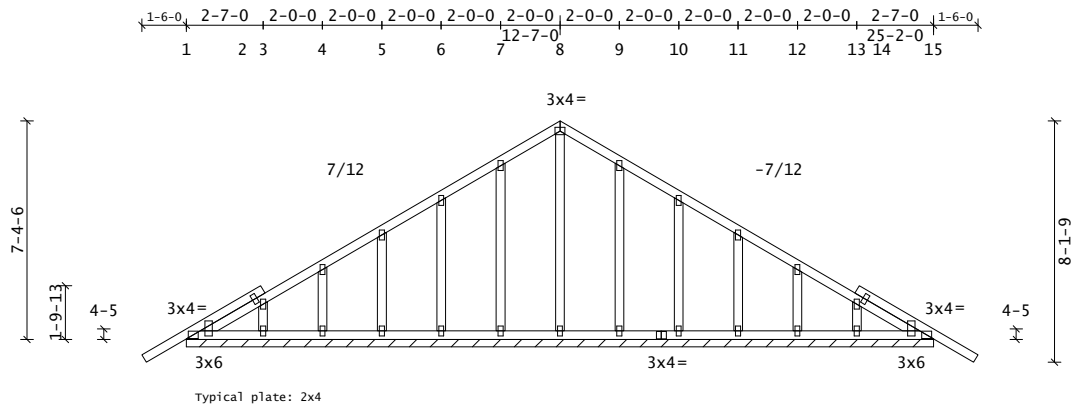

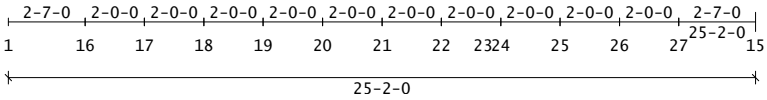

BC Plate offsets (X,Y): None

FBC-2023 | ASCE7-22 | TPI 1-2014

PSF	Live	Dead	Load Duration Factors		
TC	20.0	10.0	Live	Snow	Wind
BC	0.0	10.0	Lbr 1.25	N/A	1.60
Total		40.0	Plt 1.25	N/A	1.60
OH Soffit		2.0			

Spacing: 2-00-00 o.c. Plies: 1
Repetitive Member Increase: Yes
Green Lbr: No | Temp: T ≤ 100˚
Treated Lbr: No | Incised Lbr: No
Seasoned Lbr: Yes | Wet Service: No

Roof Snow Load (Pf) = N/A

Wind Speed (Vult) = 140 mph

Risk Category: II (I = 1.00)
Exposure Category: C
Bldg Dims: L = 61.0 ft B = 59.7 ft
MRH(h)= 18.0ft Kzt = 1.00 Ke = 1.00
Bldg Type: Enclosed
Wind DL (psf): TC = 5.0 BC = 5.0
End Vertical Exposed: L = Yes R = Yes
C&C Location: End Zone | a = 5-11-10
Design: MWFRS/C&C | Reactions: MWFRS
Net Uplift: 0.0 psf

Additional Live Load Checks

10 psf Non-Concurrent BCLL:	Yes
20 psf BCLL Limited Storage:	Yes
200 lb Moving BCLL Access:	No
300 lb Moving TCLL Maintenance:	No
300 lb TCLL/BCLL Person Loading:	No
2000 lb Moving TCLL Office:	No
Partial Length TCLL:	Yes

Plate Tolerance Checks

Fabrication: 20% (Cq = 0.80), u.n.o.
Rotation: +/- 10 degrees, u.n.o.

Material Summary

UTC	2x4	SYP	#2
LTC	2x4	SYP	#2
BC	2x4	SYP	#2
Webs	2x4	SYP	#2

Member Forces Summary (lb)

Max CSI in TC PANEL	1 - 1	0.21
Max CSI in BC PANEL	1 - 16	0.12
Max CSI in Web	21 - 8	0.10

Mbr	Jnt-Jnt	Tens	Comp	CSI
TC	OH- 1	49	0	0.21
	1- 8	91	116	0.11
	8-15	98	153	0.08
	15-OH	49	0	0.21
BC	1-23	179	108	0.12
	15-23	179	108	0.12
Web	3-16	77	109	0.02
	4-17	98	127	0.02
	5-18	93	119	0.02
	6-19	97	119	0.04
	7-20	89	127	0.07
	8-21	40	99	0.10
	9-22	89	127	0.07
	10-24	97	119	0.04
	11-25	93	119	0.02
	12-26	98	127	0.02
	13-27	77	109	0.02

Reaction Summary (lb, u.n.o.)

	Maximum	LDF	Minimum	LDF
Horizontal @ Jnt 21:	242	1.60	-242	1.60
Jnt 1 - Jnt 15 (plf):	87	1.25	26	1.60

Reactions not shown: < 400 > -150

Loads Summary

- User-defined unbalanced Top Chord Live Loads (TCLL) occurring at 12-07-00 are based on 1.00 full and 0.00 reduced load factors.
- See Loadcase Report for load combinations and additional details.

Design Notes

- Plates designed for Cq at 0.80 and Rotational Tolerance of 10.0 degrees.
- Plates located at TC pitch breaks meet the prescriptive minimum size requirement to transfer unblocked diaphragm loads across those joints.

Installation Notes

- If this truss is exposed to wind load perpendicular to the plane of the truss, gable studs must be braced according to the Construction Documents, BCSI-B3, or a gable stud bracing detail matching the design wind speed shown. Lateral bracing of the truss itself to resist out-of-plane wind load must be in accordance with the Construction Documents.
- The maximum rake overhang length is 12.0".
- Gable requires 7/16" OSB sheathing on front from 0-00-00 to 25-02-00; connection details to be provided by the Building Designer.

Deflection Summary

Creep (Kcr) = 2.00

TrussSpan	Limit	Actual(in)	Location
Vert LL	L/240	L/999(0.00)	27-15
Vert DL	L/120	L/999(0.00)	27-15
Vert CR	L/180	L/999(0.00)	27-15
Horz LL	0.75in	(0.00)	@Jt 1
Horz CR	1.25in	(0.00)	@Jt 1
Ohng CR	2L/180	2L/999(0.01)	1- 1
Ohng CR	2L/180	2L/999(0.01)	15-15

Bracing Summary

Top Chord: Structural Wood Sheathing
Bot Chord: Gypsum Board Sheathing
Web(s): None;

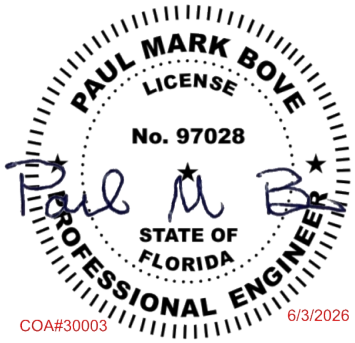

COA#30003 6/3/2026

NOTICE A copy of this design shall be furnished to the erection contractor. The design of this individual truss is based on design criteria and requirements supplied by the Truss Manufacturer and relies upon the accuracy and completeness of the information set forth by the Building Designer. A seal on this drawing indicates acceptance of professional engineering responsibility solely for the truss component design shown. See the cover page and the "Important Information & General Notes" page for additional information. All connector plates shall be manufactured by Simpson Strong-Tie Company, Inc in accordance with ESR-2762. All connector plates are 20 gauge, unless the specified plate size is followed by a "-18" which indicates an 18 gauge plate, or "S# 18", which indicates a high tension 18 gauge plate.

SIMPSON Strong-Tie
Component Solutions
Truss Studio V
2026.3.0.65
Helpdesk: 1-866-252-8606
CSHelp@strongtie.com

EngDrwg: 2026.3.1.0_PM

Project: P-1038 - Martinez		Truss ID: G04	
Truss Mfr Customer: Turnsole Builders	19 Lumber Inc	Plies: 1	SID: 0004280707
Truss Mfr Contact: Monica Register		Spacing: 2-00-00 o.c.	TID: 318742
Project Location: Project location has not been provided		Quantity: 1	Date: 06 / 02 / 26
Project Note(s):		Weight: 403.7 lb	Page: 1 of 1

TC Plate offsets (X,Y): J4(-0-04,0-07), J8(0-04,0-07)

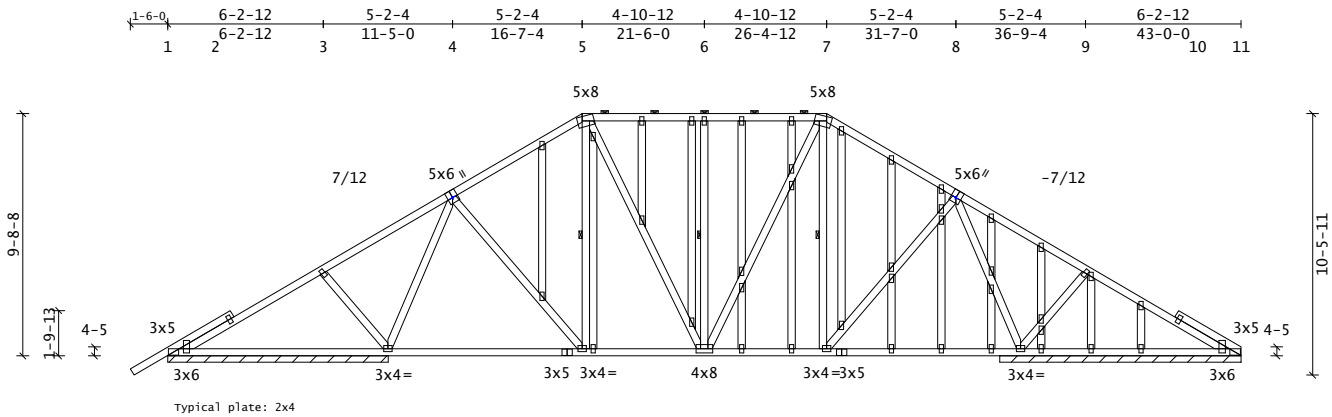

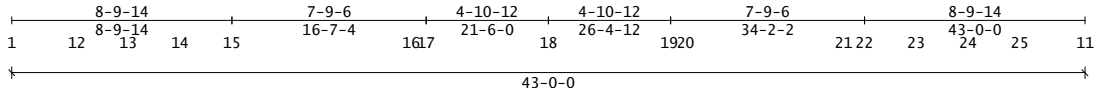

BC Plate offsets (X,Y): None

FBC-2023 | ASCE7-22 | TPI 1-2014

PSF	Live	Dead	Load Duration Factors		
TC	20.0	10.0	Live	Snow	Wind
BC	0.0	10.0	Lbr 1.25	N/A	1.60
Total		40.0	Plt 1.25	N/A	1.60
OH Soffit		2.0			

Spacing: 2-00-00 o.c. Plies: 1
Repetitive Member Increase: Yes
Green Lbr: No | Temp: T ≤ 100˚
Treated Lbr: No | Incised Lbr: No
Seasoned Lbr: Yes | Wet Service: No

Roof Snow Load (Pf) = N/A

Wind Speed (Vult) = 140 mph

Risk Category: II (I = 1.00)
Exposure Category: C
Bldg Dims: L = 61.0 ft B = 59.7 ft
MRH(h)= 18.0ft Kzt = 1.00 Ke = 1.00
Bldg Type: Enclosed
Wind DL (psf): TC = 5.0 BC = 5.0
End Vertical Exposed: L = Yes R = Yes
C&C Location: End Zone | a = 5-11-10
Design: MWFRS/C&C | Reactions: MWFRS
Net Uplift: 0.0 psf

Additional Live Load Checks

10 psf Non-Concurrent BCLL:	Yes
20 psf BCLL Limited Storage:	Yes
200 lb Moving BCLL Access:	No
300 lb Moving TCLL Maintenance:	No
300 lb TCLL/BCLL Person Loading:	No
2000 lb Moving TCLL Office:	No
Partial Length TCLL:	Yes

Plate Tolerance Checks

Fabrication: 20% (Cq = 0.80), u.n.o.
Rotation: +/- 10 degrees, u.n.o.

Material Summary

UTC	2x4	SYP	#2
LTC	2x4	SYP	#2
TC	2x4	SYP	#2
BC	2x4	SYP	#2
Webs	2x4	SYP	#2

Member Forces Summary (lb)

Max CSI in TC PANEL	3 - 4	0.43
Max CSI in BC PANEL	15 - 16	0.57
Max CSI in Web	15 - 4	0.91

Mbr	Jnt-Jnt	Tens	Comp	CSI
TC	OH- 1	49	0	0.21
	1- 3	146	131	0.38
	3- 4	247	115	0.43
	4- 5	336	692	0.38
	5- 6	375	617	0.34
	6- 7	375	617	0.34
	7- 8	339	688	0.38
	8- 9	238	3	0.42
	9-11	62	140	0.37
BC	1-12	207	176	0.18
	11-25	61	28	0.26
	12-13	207	176	0.06
	13-14	207	176	0.09
	14-15	207	176	0.48
	15-16	265	118	0.57
	16-17	265	118	0.50
	17-18	522	56	0.52
	18-19	519	18	0.43
	19-20	265	0	0.38
	20-21	265	0	0.44
	21-22	265	0	0.44
	22-23	61	28	0.04
	23-24	61	28	0.04
	24-25	61	28	0.09
Web	3-15	223	284	0.09
	4-15	344	1101	0.91
	4-17	404	3	0.09
	5-17	72	161	0.06
	5-18	239	74	0.22
	6-18	174	312	0.13
	7-18	246	112	0.21
	7-19	100	169	0.07
	8-19	390	47	0.09
	8-22	344	1088	0.90
	9-22	226	286	0.09

Reaction Summary (lb, u.n.o.)

Jnt	XLocation	Model	Maximum	LDF	Minimum	LDF	Brg_Width	Req_Width	Type	Mat	PSI
15	8-09-14	Pin	1393	1.25	-419	1.60	8-10-00	02-14	Wall	SPF	425~
22	34-02-02	HRoll	1168	1.25	-519	1.60	9-08-00	02-11	Wall	SPF	425~
Horizontal @ Jnt 1:			349	1.60	-309	1.60					
Jnt 1 - Jnt 15 (plf):			47	1.25	13	1.60					
Jnt 21 - Jnt 11 (plf):			57	1.25	0						

Reactions not shown: < 400 > -150
~ Includes adjustment for Bearing Area Factor, Cb.

Loads Summary

- User-defined unbalanced Top Chord Live Loads (TCLL) occurring at 21-06-00 are based on 1.00 full and 0.00 reduced load factors.
- See Loadcase Report for load combinations and additional details.

Design Notes

- Plates designed for Cq at 0.80 and Rotational Tolerance of 10.0 degrees.
- Plates located at TC pitch breaks meet the prescriptive minimum size requirement to transfer unblocked diaphragm loads across those joints.

Installation Notes

- If this truss is exposed to wind load perpendicular to the plane of the truss, gable studs must be braced according to the Construction Documents, BCSI-B3, or a gable stud bracing detail matching the design wind speed shown. Lateral bracing of the truss itself to resist out-of-plane wind load must be in accordance with the Construction Documents.
- The maximum rake overhang length is 12.0".
- Gable requires 7/16" OSB sheathing on front from 0-00-00 to 43-00-00; connection details to be provided by the Building Designer.
- Continuous Lateral Restraint (CLR) rows require diagonal bracing per D-WEBCLRBRACE. Alternatively, see D-WEBREINFORCE.

Deflection Summary

Creep (Kcr) = 2.00

TrussSpan	Limit	Actual(in)	Location
Vert LL	L/240	L/999(-0.09)	15-17
Vert DL	L/120	L/999(-0.09)	15-17
Vert CR	L/180	L/999(-0.18)	15-17
Horz LL	0.75in	(0.01)	@Jt11
Horz CR	1.25in	(0.02)	@Jt11
Ohng CR	2L/180	2L/999(0.01)	1- 1

Bracing Summary

Top Chord: Structural Wood Sheathing
Bot Chord: Gypsum Board Sheathing
Purlins:

Mbr	Start	End	Spacing
TC	17-04-05	25-07-11	2-00-00
BC	03-08	0	8-06-00

Web(s): Continuous Lateral Restraint; Sgl: 17-5, 18-6, 19-7

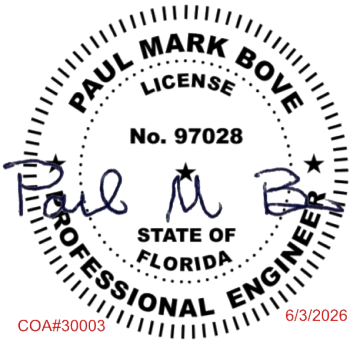

COA#30003 6/3/2026

NOTICE A copy of this design shall be furnished to the erection contractor. The design of this individual truss is based on design criteria and requirements supplied by the Truss Manufacturer and relies upon the accuracy and completeness of the information set forth by the Building Designer. A seal on this drawing indicates acceptance of professional engineering responsibility solely for the truss component design shown. See the cover page and the "Important Information & General Notes" page for additional information. All connector plates shall be manufactured by Simpson Strong-Tie Company, Inc in accordance with ESR-2762. All connector plates are 20 gauge, unless the specified plate size is followed by a "-18" which indicates an 18 gauge plate, or "S# 18", which indicates a high tension 18 gauge plate.

SIMPSON Strong-Tie
Component Solutions
Truss Studio V
2026.3.0.65
Helpdesk: 1-866-252-8606
CSHelp@strongtie.com

EngDrwg: 2026.3.1.0_PM

Project: P-1038 - Martinez		Truss ID: G05	
Truss Mfr Customer: Turnsole Builders	19 Lumber Inc	Plies: 1	SID: 0004280708
Truss Mfr Contact: Monica Register		Spacing: 2-00-00 o.c.	TID: 318742
Project Location: Project location has not been provided		Quantity: 1	Date: 06 / 01 / 26
Project Note(s):		Weight: 375.6 lb	Page: 1 of 1

TC Plate offsets (X,Y): J1(0,-1-13), J9(0-04,0-07)

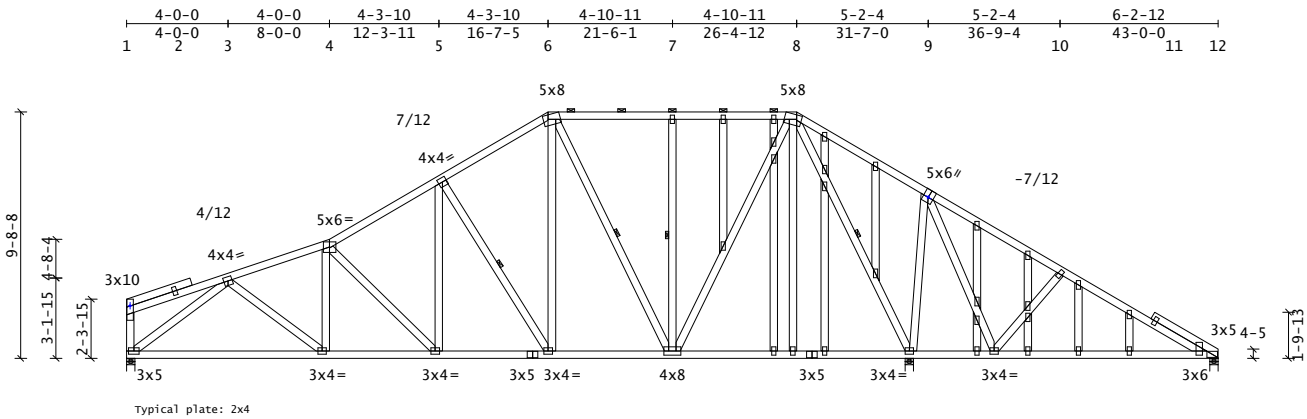

Typical plate: 2x4

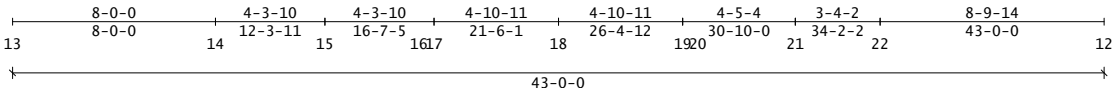

BC Plate offsets (X,Y): None

FBC-2023 | ASCE7-22 | TPI 1-2014

PSF	Live	Dead	Load Duration Factors		
TC	20.0	10.0	Live	Snow	Wind
BC	0.0	10.0	Lbr 1.25	N/A	1.60
Total		40.0	Plt 1.25	N/A	1.60
OH Soffit		2.0			

Spacing: 2-00-00 o.c. Plies: 1
Repetitive Member Increase: Yes
Green Lbr: No | Temp: T ≤ 100˚
Treated Lbr: No | Incised Lbr: No
Seasoned Lbr: Yes | Wet Service: No

Roof Snow Load (Pf) = N/A

Wind Speed (Vult) = 140 mph

Risk Category: II (I = 1.00)
Exposure Category: C
Bldg Dims: L = 61.0 ft B = 59.7 ft
MRH(h)= 18.0ft Kzt = 1.00 Ke = 1.00
Bldg Type: Enclosed
Wind DL (psf): TC = 5.0 BC = 5.0
End Vertical Exposed: L = Yes R = Yes
C&C Location: End Zone | a = 5-11-10
Design: MWFRS/C&C | Reactions: MWFRS
Net Uplift: 0.0 psf

Additional Live Load Checks

10 psf Non-Concurrent BCLL:	Yes
20 psf BCLL Limited Storage:	Yes
200 lb Moving BCLL Access:	No
300 lb Moving TCLL Maintenance:	No
300 lb TCLL/BCLL Person Loading:	No
2000 lb Moving TCLL Office:	No
Partial Length TCLL:	Yes

Plate Tolerance Checks

Fabrication: 20% (Cq = 0.80), u.n.o.
Rotation: +/- 10 degrees, u.n.o.

Material Summary

UTC	2x4	SYP	#2
LTC	2x4	SYP	#2
TC	2x4	SYP	#2
BC	2x4	SYP	#2
Webs	2x4	SYP	#2

Member Forces Summary (lb)

Max CSI in TC PANEL	8 - 9	0.56
Max CSI in BC PANEL	13 - 14	0.71
Max CSI in Web	8 - 21	0.78

Mbr	Jnt-Jnt	Tens	Comp	CSI
TC	1- 3	59	30	0.20
	3- 4	489	1663	0.35
	4- 5	478	1435	0.34
	5- 6	438	1080	0.33
	6- 7	363	698	0.33
	7- 8	363	698	0.42
	8- 9	592	0	0.56
	9-10	335	35	0.54
	10-12	198	133	0.46
BC	OH- 1	3	0	0.00
	OH-13	0	0	0.00
	12-22	70	137	0.51
	13-14	1246	359	0.71
	14-15	1545	299	0.64
	15-16	1199	236	0.31
	16-17	1199	236	0.36
	17-18	873	146	0.31
	18-19	319	61	0.18
	19-20	318	62	0.17
	20-21	318	62	0.15
	21-22	279	384	0.43
Web	1-13	69	107	0.05
	3-13	446	1594	0.67
	3-14	376	0	0.08
	4-14	88	79	0.02
	4-15	180	481	0.31
	5-15	406	94	0.09
	5-17	283	597	0.19
	6-17	598	189	0.29
	6-18	125	464	0.23
	7-18	174	293	0.12
	8-18	861	255	0.49
	8-19	192	0	0.04
	8-21	348	1565	0.78
	9-21	341	635	0.46
	9-22	463	131	0.11
	10-22	228	334	0.11

Reaction Summary (lb)

Jnt	XLocation	Model	Maximum	LDF	Minimum	LDF	Brg_Width	Req_Width	Type	Mat	PSI
13	01-12	Pin	1169	1.25	-315	1.60	04-00	01-08	Wall	SPF	531~
21	30-10-00	HRoll	2084	1.25	-622	1.60	04-00	02-10	Wall	SPF	531~
12	42-10-00	HRoll	272	1.25	-61	1.60	04-00	01-08	Wall	SPF	531~
Horizontal @ Jnt 13:			302	1.60	-334	1.60					

~ Includes adjustment for Bearing Area Factor, Cb.

Loads Summary

- User-defined unbalanced Top Chord Live Loads (TCLL) occurring at 21-06-01 are based on 1.00 full and 0.00 reduced load factors.
- See Loadcase Report for load combinations and additional details.

Design Notes

- Plates designed for Cq at 0.80 and Rotational Tolerance of 10.0 degrees.
- Plates located at TC pitch breaks meet the prescriptive minimum size requirement to transfer unblocked diaphragm loads across those joints.

Installation Notes

- If this truss is exposed to wind load perpendicular to the plane of the truss, gable studs must be braced according to the Construction Documents, BCSI-B3, or a gable stud bracing detail matching the design wind speed shown. Lateral bracing of the truss itself to resist out-of-plane wind load must be in accordance with the Construction Documents.
- The maximum rake overhang length is 12.0".
- Gable requires 7/16" OSB sheathing on front from 0-00-00 to 43-00-00; connection details to be provided by the Building Designer.
- Continuous Lateral Restraint (CLR) rows require diagonal bracing per D-WEBCLRBRACE. Alternatively, see D-WEBREINFORCE.

Deflection Summary

Creep (Kcr) = 2.00

TrussSpan	Limit	Actual(in)	Location
Vert LL	L/240	L/999(-0.14)	13-14
Vert DL	L/120	L/999(-0.16)	13-14
Vert CR	L/180	L/999(-0.31)	13-14
Horz LL	0.75in	(0.03)	@Jt21
Horz CR	1.25in	(0.05)	@Jt21

Bracing Summary

Top Chord: Structural Wood Sheathing
Bot Chord: Gypsum Board Sheathing
Purlins:

Mbr	Start	End	Spacing
TC	17-04-05	25-07-11	2-00-00

Web(s): Continuous Lateral Restraint;
Sgl: 5-17, 6-18, 18-7, 8-21

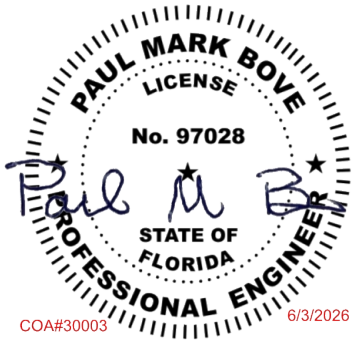

COA#30003 6/3/2026

NOTICE A copy of this design shall be furnished to the erection contractor. The design of this individual truss is based on design criteria and requirements supplied by the Truss Manufacturer and relies upon the accuracy and completeness of the information set forth by the Building Designer. A seal on this drawing indicates acceptance of professional engineering responsibility solely for the truss component design shown. See the cover page and the "Important Information & General Notes" page for additional information. All connector plates shall be manufactured by Simpson Strong-Tie Company, Inc in accordance with ESR-2762. All connector plates are 20 gauge, unless the specified plate size is followed by a "-18" which indicates an 18 gauge plate, or "S# 18", which indicates a high tension 18 gauge plate.

SIMPSON Strong-Tie
Component Solutions
Truss Studio V
2026.3.0.65
Helpdesk: 1-866-252-8606
CSHelp@strongtie.com

EngDrwg: 2026.3.1.0_PM

Project: P-1038 - Martinez		Truss ID: G06	
Truss Mfr Customer: Turnsole Builders	19 Lumber Inc	Plies: 1	SID: 0004280709
Truss Mfr Contact: Monica Register		Spacing: 2-00-00 o.c.	TID: 318742
Project Location: Project location has not been provided		Quantity: 1	Date: 06 / 01 / 26
Project Note(s):		Weight: 303.9 lb	Page: 1 of 1

TC Plate offsets (X,Y): J1(0,-1-13), J6(-1-12,0), J10(0,-2-02)

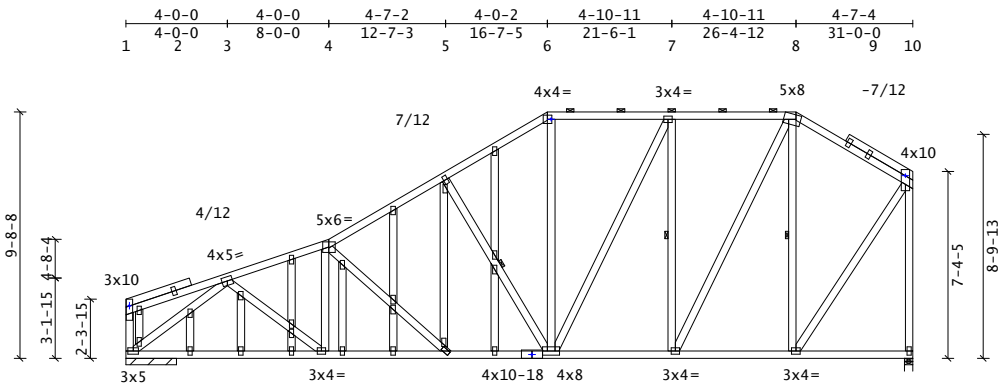

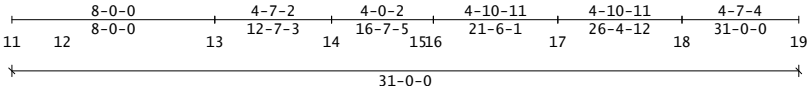

BC Plate offsets (X,Y): J15(0,0-04)

FBC-2023 | ASCE7-22 | TPI 1-2014

PSF	Live	Dead	Load Duration Factors		
TC	20.0	10.0	Live	Snow	Wind
BC	0.0	10.0	Lbr 1.25	N/A	1.60
Total		40.0	Plt 1.25	N/A	1.60
OH Soffit		2.0			

Spacing: 2-00-00 o.c. Plies: 1
Repetitive Member Increase: Yes
Green Lbr: No | Temp: T ≤ 100˚
Treated Lbr: No | Incised Lbr: No
Seasoned Lbr: Yes | Wet Service: No

Roof Snow Load (Pf) = N/A

Wind Speed (Vult) = 140 mph

Risk Category: II (I = 1.00)
Exposure Category: C
Bldg Dims: L = 61.0 ft B = 59.7 ft
MRH(h)= 18.0ft Kzt = 1.00 Ke = 1.00
Bldg Type: Enclosed
Wind DL (psf): TC = 5.0 BC = 5.0
End Vertical Exposed: L = Yes R = Yes
C&C Location: End Zone | a = 5-11-10
Design: MWFRS/C&C | Reactions: MWFRS
Net Uplift: 0.0 psf

Additional Live Load Checks

10 psf Non-Concurrent BCLL:	Yes
20 psf BCLL Limited Storage:	Yes
200 lb Moving BCLL Access:	No
300 lb Moving TCLL Maintenance:	No
300 lb TCLL/BCLL Person Loading:	No
2000 lb Moving TCLL Office:	No
Partial Length TCLL:	Yes

Plate Tolerance Checks

Fabrication: 20% (Cq = 0.80), u.n.o.
Rotation: +/- 10 degrees, u.n.o.

Material Summary

UTC	2x4	SYP	#2
LTC	2x4	SYP	#2
TC	2x4	SYP	#2
BC	2x4	SYP	DSS
Webs	2x4	SYP	#2

Member Forces Summary (lb)

Max CSI in TC PANEL	4 - 5	0.68
Max CSI in BC PANEL	13 - 14	0.70
Max CSI in Web	19 - 10	0.96

Mbr	Jnt-Jnt	Tens	Comp	CSI
TC	1- 3	59	27	0.26
	3- 4	557	1698	0.43
	4- 5	512	1418	0.68
	5- 6	528	1280	0.68
	6- 7	491	1030	0.45
	7- 8	434	837	0.43
	8-10	326	658	0.35
BC	OH- 1	3	0	0.00
	OH-11	0	0	0.00
	11-12	1289	536	0.35
	12-13	1289	536	0.35
	13-14	1566	516	0.70
	14-15	1207	431	0.68
	15-16	1207	431	0.66
	16-17	837	311	0.64
	17-18	516	207	0.15
	18-19	113	73	0.12
	19-OH	0	0	0.00
	10-OH	5	0	0.00
Web	1-11	68	99	0.05
	3-11	509	1649	0.70
	3-13	432	13	0.09
	4-13	125	87	0.03
	4-14	211	482	0.35
	5-16	225	344	0.11
	6-16	416	139	0.22
	7-16	502	149	0.29
	7-17	281	705	0.29
	8-17	707	229	0.44
	8-18	244	613	0.25
	10-18	917	237	0.27
	10-19	380	1195	0.96

Reaction Summary (lb, u.n.o.)

Jnt	XLocation	Model	Maximum	LDF	Minimum	LDF	Brg_Width	Req_Width	Type	Mat	PSI
19	30-10-04	HRoll	1228	1.25	-359	1.60	04-00	01-09	Wall	SPF	531~
11	01-12	Pin	1014	1.25	-356	1.60	2-00-00	02-00	Wall	SPF	425~

Horizontal @ Jnt 11: 427 1.60 -293 1.60
Jnt 11 - Jnt 12 (plf): 121 1.25 0
Reactions not shown: < 400 > -150
~ Includes adjustment for Bearing Area Factor, Cb.

Loads Summary

- User-defined unbalanced Top Chord Live Loads (TCLL) occurring at 21-06-01 are based on 1.00 full and 0.00 reduced load factors.
- See Loadcase Report for load combinations and additional details.

Design Notes

- Plates designed for Cq at 0.80 and Rotational Tolerance of 10.0 degrees.
- Plates located at TC pitch breaks meet the prescriptive minimum size requirement to transfer unblocked diaphragm loads across those joints.

Installation Notes

- If this truss is exposed to wind load perpendicular to the plane of the truss, gable studs must be braced according to the Construction Documents, BCSI-B3, or a gable stud bracing detail matching the design wind speed shown. Lateral bracing of the truss itself to resist out-of-plane wind load must be in accordance with the Construction Documents.
- The maximum rake overhang length is 12.0".
- Gable requires 7/16" OSB sheathing on front from 0-00-00 to 31-00-00; connection details to be provided by the Building Designer.
- Continuous Lateral Restraint (CLR) rows require diagonal bracing per D-WEBCLRBRACE. Alternatively, see D-WEBREINFORCE.

Deflection Summary

Creep (Kcr) = 2.00

TrussSpan	Limit	Actual(in)	Location
Vert LL	L/240	L/908(-0.38)	13-14
Vert DL	L/120	L/639(-0.54)	13-14
Vert CR	L/180	L/375(-0.92)	13-14
Horz LL	0.75in	(0.02)	@Jt19
Horz CR	1.25in	(0.03)	@Jt19

Bracing Summary

Top Chord: Structural Wood Sheathing
Bot Chord: Gypsum Board Sheathing
Purlins:

Mbr	Start	End	Spacing
TC	17-04-05	25-07-11	2-00-00

Web(s): Continuous Lateral Restraint;
Sgl: 5-16, 17-7, 18-8

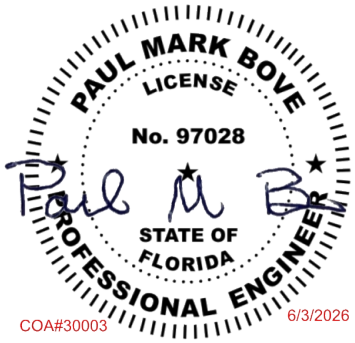

COA#30003 6/3/2026

NOTICE A copy of this design shall be furnished to the erection contractor. The design of this individual truss is based on design criteria and requirements supplied by the Truss Manufacturer and relies upon the accuracy and completeness of the information set forth by the Building Designer. A seal on this drawing indicates acceptance of professional engineering responsibility solely for the truss component design shown. See the cover page and the "Important Information & General Notes" page for additional information. All connector plates shall be manufactured by Simpson Strong-Tie Company, Inc in accordance with ESR-2762. All connector plates are 20 gauge, unless the specified plate size is followed by a "-18" which indicates an 18 gauge plate, or "S# 18", which indicates a high tension 18 gauge plate.

SIMPSON Strong-Tie
Component Solutions
Truss Studio V
2026.3.0.65
Helpdesk: 1-866-252-8606
CSHelp@strongtie.com

EngDrwg: 2026.3.1.0_PM

Project: P-1038 - Martinez		Truss ID: G07	
Truss Mfr Customer: Turnsole Builders	19 Lumber Inc	Plies: 1	SID: 0004280710
Truss Mfr Contact: Monica Register		Spacing: 2-00-00 o.c.	TID: 318742
Project Location: Project location has not been provided		Quantity: 1	Date: 06 / 02 / 26
Project Note(s):		Weight: 254.8 lb	Page: 1 of 1

TC Plate offsets (X,Y): J11(-1-12,0), J15(1-12,0), J19(0,-1-13)

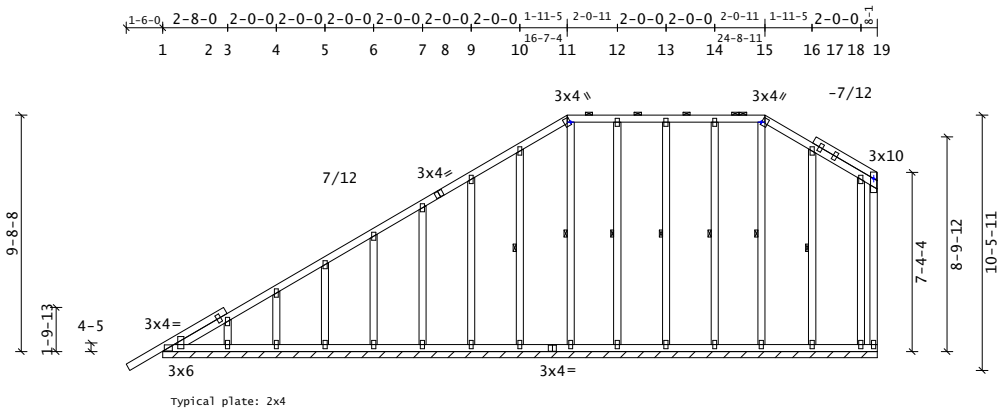

BC Plate offsets (X,Y): None

FBC-2023 | ASCE7-22 | TPI 1-2014

PSF	Live	Dead	Load Duration Factors		
TC	20.0	10.0	Live	Snow	Wind
BC	0.0	10.0	Lbr 1.25	N/A	1.60
Total		40.0	Plt 1.25	N/A	1.60
OH Soffit		2.0			

Spacing: 2-00-00 o.c. Plies: 1
Repetitive Member Increase: Yes
Green Lbr: No | Temp: T ≤ 100˚
Treated Lbr: No | Incised Lbr: No
Seasoned Lbr: Yes | Wet Service: No

Roof Snow Load (Pf) = N/A

Wind Speed (Vult) = 140 mph

Risk Category: II (I = 1.00)
Exposure Category: C
Bldg Dims: L = 61.0 ft B = 59.7 ft
MRH(h)= 18.0ft Kzt = 1.00 Ke = 1.00
Bldg Type: Enclosed
Wind DL (psf): TC = 5.0 BC = 5.0
End Vertical Exposed: L = Yes R = Yes
C&C Location: End Zone | a = 5-11-10
Design: MWFRS/C&C | Reactions: MWFRS
Net Uplift: 0.0 psf

Additional Live Load Checks

10 psf Non-Concurrent BCLL:	Yes
20 psf BCLL Limited Storage:	Yes
200 lb Moving BCLL Access:	No
300 lb Moving TCLL Maintenance:	No
300 lb TCLL/BCLL Person Loading:	No
2000 lb Moving TCLL Office:	No
Partial Length TCLL:	Yes

Plate Tolerance Checks

Fabrication: 20% (Cq = 0.80), u.n.o.
Rotation: +/- 10 degrees, u.n.o.

Material Summary

UTC	2x4	SYP	#2
LTC	2x4	SYP	#2
TC	2x4	SYP	#2
BC	2x4	SYP	#2
Webs	2x4	SYP	#2

Member Forces Summary (lb)

Max CSI in TC PANEL	1 - 1	0.21
Max CSI in BC PANEL	1 - 20	0.13
Max CSI in Web	35 - 19	0.61

Mbr	Jnt-Jnt	Tens	Comp	CSI
TC	OH- 1	49	0	0.21
	1- 8	225	366	0.09
	8-11	238	109	0.08
	11-15	229	84	0.09
	15-19	239	93	0.08
BC	1-27	398	240	0.13
	27-35	113	73	0.04
Web	3-20	85	113	0.02
	4-21	98	127	0.02
	5-22	93	119	0.02
	6-23	94	120	0.04
	7-24	93	120	0.07
	9-25	97	117	0.10
	10-26	90	130	0.04
	11-28	75	108	0.04
	12-29	67	126	0.05
	13-30	68	119	0.05
	14-31	68	126	0.05
	15-32	55	107	0.04
	16-33	99	137	0.04
	18-34	80	82	0.07
	19-35	53	39	0.61

Reaction Summary (lb, u.n.o.)

	Maximum	LDF	Minimum	LDF
Horizontal @ Jnt 26:	472	1.60	-268	1.60
Jnt 1 - Jnt 35 (plf):	83	1.25	24	1.60

Reactions not shown: < 400 > -150

Loads Summary

- User-defined unbalanced Top Chord Live Loads (TCLL) occurring at 20-08-00 are based on 1.00 full and 0.00 reduced load factors.
- See Loadcase Report for load combinations and additional details.

Design Notes

- Plates designed for Cq at 0.80 and Rotational Tolerance of 10.0 degrees.
- Plates located at TC pitch breaks meet the prescriptive minimum size requirement to transfer unblocked diaphragm loads across those joints.

Installation Notes

- If this truss is exposed to wind load perpendicular to the plane of the truss, gable studs must be braced according to the Construction Documents, BCSI-B3, or a gable stud bracing detail matching the design wind speed shown. Lateral bracing of the truss itself to resist out-of-plane wind load must be in accordance with the Construction Documents.
- The maximum rake overhang length is 12.0".
- Gable requires 7/16" OSB sheathing on front from 0-00-00 to 29-04-00; connection details to be provided by the Building Designer.
- Continuous Lateral Restraint (CLR) rows require diagonal bracing per D-WEBCLRBRACE. Alternatively, see D-WEBREINFORCE.

Deflection Summary

Creep (Kcr) = 2.00

TrussSpan	Limit	Actual(in)	Location
Vert LL	L/240	L/999(0.00)	1-20
Vert DL	L/120	L/999(0.00)	1-20
Vert CR	L/180	L/999(0.00)	1-20
Horz LL	0.75in	(0.01)	@Jt 1
Horz CR	1.25in	(0.01)	@Jt 1
Ohng CR	2L/180	2L/999(0.01)	1- 1

Bracing Summary

Top Chord: Structural Wood Sheathing
Bot Chord: Gypsum Board Sheathing
Purlins:

Mbr	Start	End	Spacing
TC	17-04-05	23-11-11	2-00-00

Web(s): Continuous Lateral Restraint;
Sgl: 26-10, 28-11, 29-12, 30-13, 31-14, 32-15, 33-16

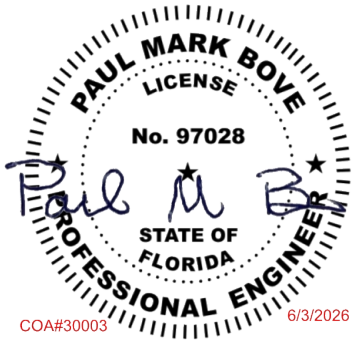

COA#30003 6/3/2026

NOTICE A copy of this design shall be furnished to the erection contractor. The design of this individual truss is based on design criteria and requirements supplied by the Truss Manufacturer and relies upon the accuracy and completeness of the information set forth by the Building Designer. A seal on this drawing indicates acceptance of professional engineering responsibility solely for the truss component design shown. See the cover page and the "Important Information & General Notes" page for additional information. All connector plates shall be manufactured by Simpson Strong-Tie Company, Inc in accordance with ESR-2762. All connector plates are 20 gauge, unless the specified plate size is followed by a "-18" which indicates an 18 gauge plate, or "S# 18", which indicates a high tension 18 gauge plate.

SIMPSON Strong-Tie
Component Solutions
Truss Studio V
2026.3.0.65
Helpdesk: 1-866-252-8606
CSHelp@strongtie.com

EngDrwg: 2026.3.1.0_PM

Project: P-1038 - Martinez		Truss ID: G08	
Truss Mfr Customer: Turnsole Builders	19 Lumber Inc	Plies: 1	SID: 0004280711
Truss Mfr Contact: Monica Register		Spacing: 2-00-00 o.c.	TID: 318742
Project Location: Project location has not been provided		Quantity: 2	Date: 06 / 01 / 26
Project Note(s):		Weight: 28.7 lb	Page: 1 of 1

TC Plate offsets (X,Y): None

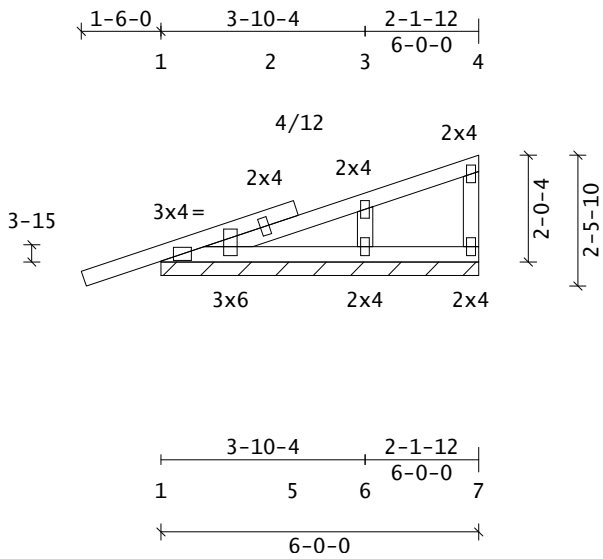

BC Plate offsets (X,Y): None

FBC-2023 | ASCE7-22 | TPI 1-2014

```
PSF  Live  Dead  Load Duration Factors
TC   20.0  10.0      Live  Snow  Wind
BC    0.0  10.0  Lbr 1.25   N/A  1.60
Total      40.0  Plt 1.25   N/A  1.60
OH Soffit   2.0
Spacing:  2-00-00 o.c.   Plies: 1
Repetitive Member Increase: Yes
Green Lbr:  No | Temp: T ≤ 100˚
Treated Lbr:  No | Incised Lbr:  No
Seasoned Lbr: Yes | Wet Service:  No
```

Roof Snow Load (Pf) = N/A

Wind Speed (Vult) = 140 mph

```
Risk Category: II (I = 1.00)
Exposure Category: C
Bldg Dims: L =  61.0 ft  B =  59.7 ft
MRH(h)=  18.0ft Kzt = 1.00 Ke = 1.00
Bldg Type: Enclosed
Wind DL (psf): TC =  5.0 BC =  5.0
End Vertical Exposed: L = Yes R = Yes
C&C Location: End Zone | a = 5-11-10
Design: MWFRS/C&C | Reactions: MWFRS
Net Uplift: 0.0 psf
```

Additional Live Load Checks

```
10 psf Non-Concurrent BCLL:       Yes
20 psf BCLL Limited Storage:      Yes
200 lb Moving BCLL Access:         No
300 lb Moving TCLL Maintenance:    No
300 lb TCLL/BCLL Person Loading:   No
2000 lb Moving TCLL Office:        No
Partial Length TCLL:              Yes
```

Plate Tolerance Checks

```
Fabrication: 20% (Cq = 0.80), u.n.o.
Rotation: +/- 10 degrees, u.n.o.
```

Material Summary

```
UTC     2x4   SYP  #2
LTC     2x4   SYP  #2
BC      2x4   SYP  #2
Webs    2x4   SYP  #2
```

Member Forces Summary (lb)

```
Max CSI in TC PANEL   1 -  1   0.36
Max CSI in BC PANEL   1 -  5   0.07
Max CSI in Web        7 -  4   0.07

Mbr Jnt-Jnt   Tens    Comp     CSI
TC   OH- 1      32       0    0.36
      1- 4      43      56    0.12
BC    1- 7      86      73    0.07
Web   3- 6      94     147    0.05
      4- 7      26      55    0.07
```

Reaction Summary (lb, u.n.o.)

```
                    Maximum LDF  Minimum LDF
Horizontal @ Jnt  5:   103  1.60    -15  1.60
Jnt  1 - Jnt  7 (plf):  95  1.25     30  1.60
Reactions not shown: < 400       > -150
```

Loads Summary

- User-defined unbalanced Top Chord Live Loads (TCLL) occurring at 6-00-00 are based on 1.00 full and 0.00 reduced load factors.
- See Loadcase Report for load combinations and additional details.

Design Notes

- Plates designed for Cq at 0.80 and Rotational Tolerance of 10.0 degrees.
- Plates located at TC pitch breaks meet the prescriptive minimum size requirement to transfer unblocked diaphragm loads across those joints.

Installation Notes

- If this truss is exposed to wind load perpendicular to the plane of the truss, gable studs must be braced according to the Construction Documents, BCSI-B3, or a gable stud bracing detail matching the design wind speed shown. Lateral bracing of the truss itself to resist out-of-plane wind load must be in accordance with the Construction Documents.
- The maximum rake overhang length is 12.0".
- Gable requires 7/16" OSB sheathing on front from 0-00-00 to 6-00-00; connection details to be provided by the Building Designer.

Deflection Summary

```
Creep (Kcr) = 2.00
TrussSpan Limit  Actual(in)   Location
Vert LL   L/240   L/999(-0.00)  6- 7
Vert DL   L/120   L/999(-0.00)  6- 7
Vert CR   L/180   L/999(-0.00)  6- 7
Horz LL   0.75in       ( 0.00) @Jt 1
Horz CR   1.25in       ( 0.00) @Jt 1
Ohng CR  2L/180  2L/999( 0.03)  1- 1
```

Bracing Summary

```
Top Chord: Structural Wood Sheathing
Bot Chord: Gypsum Board Sheathing
Web(s): None;
```

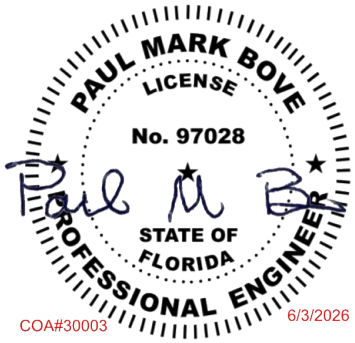

COA#30003 6/3/2026

NOTICE A copy of this design shall be furnished to the erection contractor. The design of this individual truss is based on design criteria and requirements supplied by the Truss Manufacturer and relies upon the accuracy and completeness of the information set forth by the Building Designer. A seal on this drawing indicates acceptance of professional engineering responsibility solely for the truss component design shown. See the cover page and the "Important Information & General Notes" page for additional information. All connector plates shall be manufactured by Simpson Strong-Tie Company, Inc in accordance with ESR-2762. All connector plates are 20 gauge, unless the specified plate size is followed by a "-18" which indicates an 18 gauge plate, or "S# 18", which indicates a high tension 18 gauge plate.

SIMPSON Strong-Tie
Component Solutions
Truss Studio V
2026.3.0.65
Helpdesk: 1-866-252-8606
CSHelp@strongtie.com

EngDrwg: 2026.3.1.0_PM

Project: P-1038 - Martinez		Truss ID: G10	
Truss Mfr Customer: Turnsole Builders	19 Lumber Inc	Plies: 1	SID: 0004280712
Truss Mfr Contact: Monica Register		Spacing: 2-00-00 o.c.	TID: 318742
Project Location: Project location has not been provided		Quantity: 1	Date: 06 / 01 / 26
Project Note(s):		Weight: 144.3 lb	Page: 1 of 1

TC Plate offsets (X,Y): J13(-0-04,0-02)

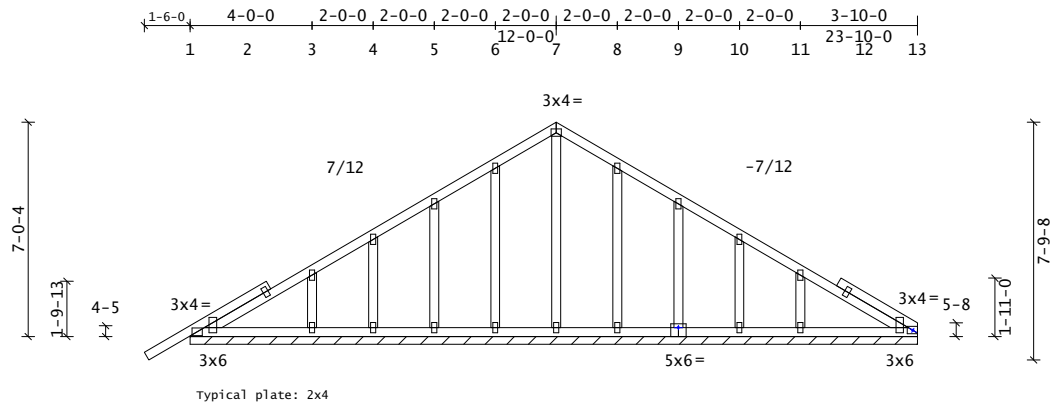

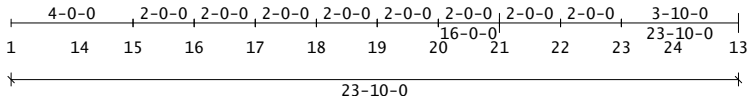

BC Plate offsets (X,Y): J21(0,-1-00)

FBC-2023 | ASCE7-22 | TPI 1-2014

PSF	Live	Dead	Load Duration Factors		
TC	20.0	10.0	Live	Snow	Wind
BC	0.0	10.0	Lbr 1.25	N/A	1.60
Total		40.0	Plt 1.25	N/A	1.60
OH Soffit		2.0			

Spacing: 2-00-00 o.c. Plies: 1
Repetitive Member Increase: Yes
Green Lbr: No | Temp: T ≤ 100˚
Treated Lbr: No | Incised Lbr: No
Seasoned Lbr: Yes | Wet Service: No

Roof Snow Load (Pf) = N/A

Wind Speed (Vult) = 140 mph

Risk Category: II (I = 1.00)
Exposure Category: C
Bldg Dims: L = 61.0 ft B = 59.7 ft
MRH(h)= 18.0ft Kzt = 1.00 Ke = 1.00
Bldg Type: Enclosed
Wind DL (psf): TC = 5.0 BC = 5.0
End Vertical Exposed: L = Yes R = Yes
C&C Location: End Zone | a = 5-11-10
Design: MWFRS/C&C | Reactions: MWFRS
Net Uplift: 0.0 psf

Additional Live Load Checks

10 psf Non-Concurrent BCLL:	Yes
20 psf BCLL Limited Storage:	Yes
200 lb Moving BCLL Access:	No
300 lb Moving TCLL Maintenance:	No
300 lb TCLL/BCLL Person Loading:	No
2000 lb Moving TCLL Office:	No
Partial Length TCLL:	Yes

Plate Tolerance Checks

Fabrication: 20% (Cq = 0.80), u.n.o.
Rotation: +/- 10 degrees, u.n.o.

Material Summary

UTC	2x4	SYP	#2
LTC	2x4	SYP	#2
BC	2x4	SYP	#2
Webs	2x4	SYP	#2

Member Forces Summary (lb)

Max CSI in TC PANEL	1 - 1	0.21
Max CSI in BC PANEL	24 - 13	0.11
Max CSI in Web	19 - 7	0.08

Mbr	Jnt-Jnt	Tens	Comp	CSI
TC	OH- 1	49	0	0.21
	1- 7	93	138	0.10
	7-13	91	138	0.11
BC	1-21	176	104	0.10
	13-21	152	75	0.11
Web	3-15	135	169	0.03
	4-16	81	109	0.02
	5-17	99	122	0.04
	6-18	90	127	0.07
	7-19	36	93	0.08
	8-20	90	127	0.06
	9-21	99	122	0.04
	10-22	78	102	0.02
	11-23	145	174	0.03

Reaction Summary (lb, u.n.o.)

	Maximum	LDF	Minimum	LDF
Horizontal @ Jnt 19:	251	1.60	-211	1.60
Jnt 1 - Jnt 13 (plf):	84	1.25	25	1.60

Reactions not shown: < 400 > -150

Loads Summary

- User-defined unbalanced Top Chord Live Loads (TCLL) occurring at 12-00-00 are based on 1.00 full and 0.00 reduced load factors.
- See Loadcase Report for load combinations and additional details.

Design Notes

- Plates designed for Cq at 0.80 and Rotational Tolerance of 10.0 degrees.
- Plates located at TC pitch breaks meet the prescriptive minimum size requirement to transfer unblocked diaphragm loads across those joints.

Installation Notes

- If this truss is exposed to wind load perpendicular to the plane of the truss, gable studs must be braced according to the Construction Documents, BCSI-B3, or a gable stud bracing detail matching the design wind speed shown. Lateral bracing of the truss itself to resist out-of-plane wind load must be in accordance with the Construction Documents.
- The maximum rake overhang length is 12.0".
- Gable requires 7/16" OSB sheathing on front from 0-00-00 to 23-10-00; connection details to be provided by the Building Designer.

Deflection Summary

Creep (Kcr) = 2.00

TrussSpan	Limit	Actual(in)	Location
Vert LL	L/240	L/999(-0.00)	1-14
Vert DL	L/120	L/999(-0.00)	24-13
Vert CR	L/180	L/999(-0.00)	24-13
Horz LL	0.75in	(0.01)	@Jt13
Horz CR	1.25in	(0.01)	@Jt13
Ohng CR	2L/180	2L/999(0.01)	1- 1

Bracing Summary

Top Chord: Structural Wood Sheathing
Bot Chord: Gypsum Board Sheathing
Web(s): None;

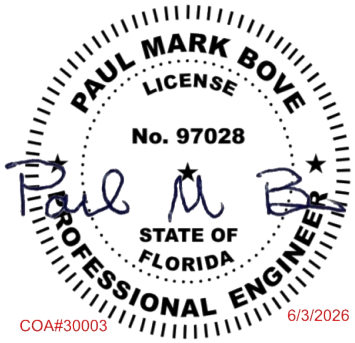

COA#30003 6/3/2026

NOTICE A copy of this design shall be furnished to the erection contractor. The design of this individual truss is based on design criteria and requirements supplied by the Truss Manufacturer and relies upon the accuracy and completeness of the information set forth by the Building Designer. A seal on this drawing indicates acceptance of professional engineering responsibility solely for the truss component design shown. See the cover page and the "Important Information & General Notes" page for additional information. All connector plates shall be manufactured by Simpson Strong-Tie Company, Inc in accordance with ESR-2762. All connector plates are 20 gauge, unless the specified plate size is followed by a "-18" which indicates an 18 gauge plate, or "S# 18", which indicates a high tension 18 gauge plate.

SIMPSON Strong-Tie
Component Solutions
Truss Studio V
2026.3.0.65
Helpdesk: 1-866-252-8606
CSHelp@strongtie.com

EngDrwg: 2026.3.1.0_PM

Project: P-1038 - Martinez		Truss ID: GR02	
Truss Mfr Customer: Turnsole Builders	19 Lumber Inc	Plies: 2	SID: 0004280713
Truss Mfr Contact: Monica Register		Spacing: 2-00-00 o.c.	TID: 318742
Project Location: Project location has not been provided		Quantity: 1	Date: 06 / 03 / 26
Project Note(s):		Weight: 204.6 lb	Page: 1 of 1

TC Plate offsets (X,Y): None

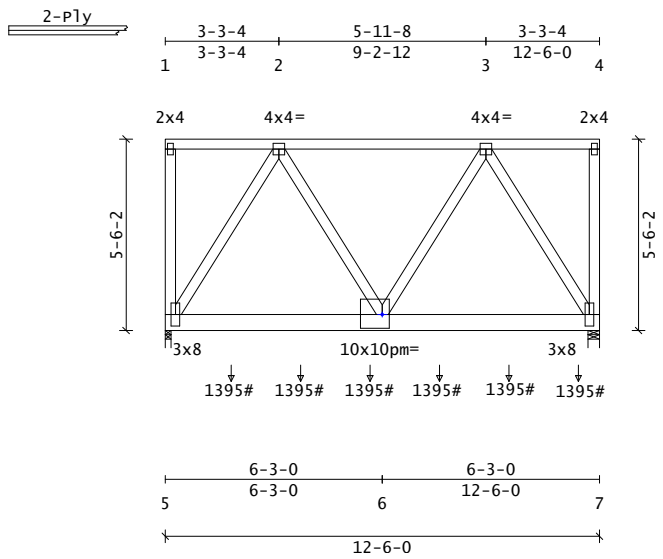

BC Plate offsets (X,Y): J6(-2-09,0-05)

FBC-2023 | ASCE7-22 | TPI 1-2014

PSF	Live	Dead	Load Duration Factors		
TC	20.0	10.0	Live	Snow	Wind
BC	0.0	10.0	Lbr 1.25	N/A	1.60
Total		40.0	Plt 1.25	N/A	1.60
OH Soffit		2.0			

Spacing: 2-00-00 o.c. Plies: 2
Repetitive Member Increase: No
Green Lbr: No | Temp: T ≤ 100˚
Treated Lbr: No | Incised Lbr: No
Seasoned Lbr: Yes | Wet Service: No

Roof Snow Load (Pf) = N/A

Wind Speed (Vult) = 140 mph

Risk Category: II (I = 1.00)
Exposure Category: C
Bldg Dims: L = 61.0 ft B = 59.7 ft
MRH(h)= 18.0ft Kzt = 1.00 Ke = 1.00
Bldg Type: Enclosed
Wind DL (psf): TC = 5.0 BC = 5.0
End Vertical Exposed: L = Yes R = Yes
C&C Location: End Zone | a = 5-11-10
Design: MWFRS/C&C | Reactions: MWFRS
Net Uplift: 0.0 psf

Additional Live Load Checks

10 psf Non-Concurrent BCLL:	Yes
20 psf BCLL Limited Storage:	Yes
200 lb Moving BCLL Access:	No
300 lb Moving TCLL Maintenance:	No
300 lb TCLL/BCLL Person Loading:	No
2000 lb Moving TCLL Office:	No
Partial Length TCLL:	Yes

Plate Tolerance Checks

Fabrication: 20% (Cq = 0.80), u.n.o.
Rotation: +/- 10 degrees, u.n.o.

Material Summary

TC	2x4	SYP	#2
BC	2x6	SYP	DSS
Webs	2x4	SYP	#2

Member Forces Summary (lb)

Max CSI in TC PANEL	2 - 3	0.25
Max CSI in BC PANEL	5 - 6	0.66
Max CSI in Web	2 - 6	0.35

Mbr	Jnt-Jnt	Tens	Comp	CSI
TC	OH- 1	0	0	0.00
	1- 2	84	54	0.22
	2- 3	1000	3348	0.25
	3- 4	84	54	0.22
	4-OH	0	0	0.00
BC	OH- 5	0	0	0.00
	5- 6	1791	662	0.66
	6- 7	1791	603	0.66
	7-OH	0	0	0.00
Web	1- 5	31	68	0.21
	2- 5	1000	3446	0.32
	2- 6	3102	848	0.35
	3- 6	3102	848	0.35
	3- 7	1060	3446	0.32
	4- 7	31	67	0.21

Reaction Summary (lb)

Jnt	XLocation	Model	Maximum	LDF	Minimum	LDF	Brg_Width	Req_Width	Type	Mat	PSI
5	01-12	Pin	4177	1.25	-1225	1.60	02-00	02-15*	Wall	SPF	478~
7	12-04-04	HRoll	5061	1.25	-1469	1.60	04-00	03-08	Wall	SPF	478~

Horizontal @ Jnt 5: 238 1.60 -238 1.60
Horizontal @ Jnt 7: 238 1.60 -238 1.60
* Req Width > Brg Width; enhancement required.
~ Includes adjustment for Bearing Area Factor, Cb.

Jnt	Bearing Area	Required Area	Required Truss Width	Bearing Enhancement
5	6.00 in²	8.74 in²	4.37 in (3-ply)	Per Building Designer

Loads Summary

· User-defined unbalanced Top Chord Live Loads (TCLL) occurring at 6-03-00 are based on 1.00 full and 0.00 reduced load factors.
· See Loadcase Report for load combinations and additional details.
Concentrated Loads (lbs) based on Max and Min:

Mbr	Location	Max	Min	Dir	DL/TL	Angle	Connection	Description
BC	1-10-12	1395	-385	V	0.48	90°	Hanger	T01
BC	3-10-12	1395	-385	V	0.48	90°	Hanger	T01
BC	5-10-12	1395	-385	V	0.48	90°	Hanger	T01
BC	7-10-12	1395	-385	V	0.48	90°	Hanger	T01
BC	9-10-12	1395	-385	V	0.48	90°	Hanger	T01
BC	11-10-12	1395	-385	V	0.48	90°	Hanger	T01

2-PLY TRUSS Fastener Schedule

Fasten each ply to the adjacent ply as follows(rows staggered):
TC 2x4, 1-row(s) of 10d Nails (0.120" dia. x 2-7/8" min.) @ 12.0" o.c.
BC 2x6, 2-row(s) of 10d Nails (0.120" dia. x 2-7/8" min.) @ 12.0" o.c.**
WB 2x4, 1-row(s) of 10d Nails (0.120" dia. x 2-7/8" min.) @ 9.0" o.c.
** Use additional fasteners of the same type (u.n.o.) within +/-12" of the location(s) indicated below (except where approved hangers are used with fasteners that transfer the load to all plies):

BC: 1-10-12, 3 ; BC: 3-10-12, 3 ; BC: 5-10-12, 3 ; BC: 7-10-12, 3
BC: 9-10-12, 3 ; BC: 11-10-12, 3

Design Notes

· Plates designed for Cq at 0.80 and Rotational Tolerance of 10.0 degrees.
· Plates located at TC pitch breaks meet the prescriptive minimum size requirement to transfer unblocked diaphragm loads across those joints.
· A "pm" next to the plate size indicates that the plate has been user modified; see Plate Offsets for any special positioning requirements.

Installation Notes

· Less than 0.25/12 pitch requires adequate drainage to prevent ponding.
· This truss is not symmetric - proper orientation is critical.

Deflection Summary

Creep (Kcr) = 2.00

TrussSpan	Limit	Actual(in)	Location
Vert LL	L/240	L/999(-0.11)	5- 6
Vert DL	L/120	L/999(-0.08)	5- 6
Vert CR	L/180	L/787(-0.19)	5- 6
Horz LL	0.75in	(0.00)	@Jt 7
Horz CR	1.25in	(0.01)	@Jt 7

Bracing Summary

Top Chord: Structural Wood Sheathing
Bot Chord: Gypsum Board Sheathing
Web(s): None;

PAUL MARK BOVE
LICENSE
No. 97028
STATE OF FLORIDA
PROFESSIONAL ENGINEER
COA#30003
6/3/2026

NOTICE A copy of this design shall be furnished to the erection contractor. The design of this individual truss is based on design criteria and requirements supplied by the Truss Manufacturer and relies upon the accuracy and completeness of the information set forth by the Building Designer. A seal on this drawing indicates acceptance of professional engineering responsibility solely for the truss component design shown. See the cover page and the "Important Information & General Notes" page for additional information. All connector plates shall be manufactured by Simpson Strong-Tie Company, Inc in accordance with ESR-2762. All connector plates are 20 gauge, unless the specified plate size is followed by a "-18" which indicates an 18 gauge plate, or "S# 18", which indicates a high tension 18 gauge plate.

SIMPSON Strong-Tie
Component Solutions
Truss Studio V
2026.3.0.65
Helpdesk: 1-866-252-8606
CSHelp@strongtie.com

EngDrwg: 2026.3.1.0_PM

Project: P-1038 - Martinez		Truss ID: M01	
Truss Mfr Customer: Turnsole Builders	19 Lumber Inc	Plies: 1	SID: 0004280714
Truss Mfr Contact: Monica Register		Spacing: 2-00-00 o.c.	TID: 318742
Project Location: Project location has not been provided		Quantity: 17	Date: 06 / 03 / 26
Project Note(s):		Weight: 24.0 lb	Page: 1 of 1

TC Plate offsets (X,Y): None

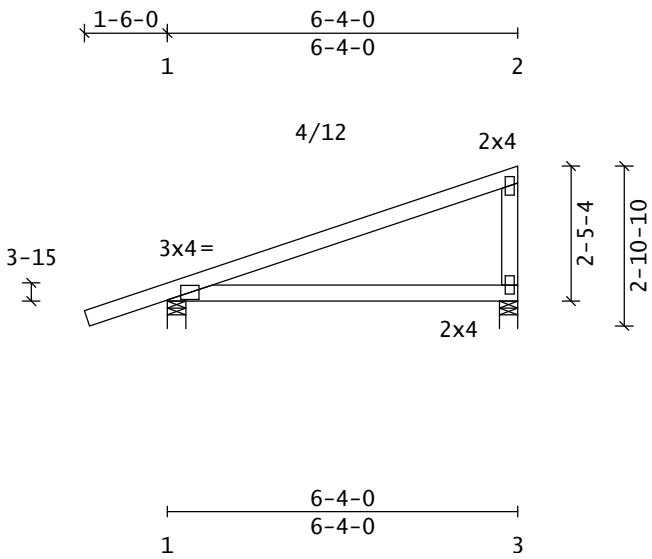

BC Plate offsets (X,Y): None

FBC-2023 | ASCE7-22 | TPI 1-2014

PSF	Live	Dead	Load Duration Factors		
TC	20.0	10.0	Live	Snow	Wind
BC	0.0	10.0	Lbr 1.25	N/A	1.60
Total		40.0	Plt 1.25	N/A	1.60
OH Soffit		2.0			

Spacing: 2-00-00 o.c. Plies: 1
Repetitive Member Increase: Yes
Green Lbr: No | Temp: T ≤ 100˚
Treated Lbr: No | Incised Lbr: No
Seasoned Lbr: Yes | Wet Service: No

Roof Snow Load (Pf) = N/A

Wind Speed (Vult) = 140 mph

Risk Category: II (I = 1.00)
Exposure Category: C
Bldg Dims: L = 61.0 ft B = 59.7 ft
MRH(h)= 18.0ft Kzt = 1.00 Ke = 1.00
Bldg Type: Enclosed
Wind DL (psf): TC = 5.0 BC = 5.0
End Vertical Exposed: L = Yes R = Yes
C&C Location: End Zone | a = 5-11-10
Design: MWFRS/C&C | Reactions: MWFRS
Net Uplift: 0.0 psf

Additional Live Load Checks

10 psf Non-Concurrent BCLL:	Yes
20 psf BCLL Limited Storage:	Yes
200 lb Moving BCLL Access:	No
300 lb Moving TCLL Maintenance:	No
300 lb TCLL/BCLL Person Loading:	No
2000 lb Moving TCLL Office:	No
Partial Length TCLL:	Yes

Plate Tolerance Checks

Fabrication: 20% (Cq = 0.80), u.n.o.
Rotation: +/- 10 degrees, u.n.o.

Material Summary

TC	2x4	SYP	#2
BC	2x4	SYP	#2
Webs	2x4	SYP	#2

Member Forces Summary (lb)

Max CSI in TC PANEL	1 - 2	0.56
Max CSI in BC PANEL	1 - 3	0.39
Max CSI in Web	3 - 2	0.13

Mbr	Jnt-Jnt	Tens	Comp	CSI
TC	OH- 1	32	0	0.31
	1- 2	50	53	0.56
	2-OH	0	2	0.00
BC	1- 3	0	20	0.39
	3-OH	0	0	0.00
Web	2- 3	85	169	0.13

Reaction Summary (lb)

Jnt	XLocation	Model	Maximum	LDF	Minimum	LDF	Brg_Width	Req_Width	Type	Mat	PSI
1	02-00	Pin	364	1.25	-117	1.60	04-00	01-08	Wall	SPF	531~
3	6-02-04	HRoll	246	1.25	-69	1.60	04-00	01-08	Wall	SPF	531~
Horizontal @ Jnt 1:			114	1.60	-26	1.60					

~ Includes adjustment for Bearing Area Factor, Cb.

Loads Summary

- User-defined unbalanced Top Chord Live Loads (TCLL) occurring at 6-04-00 are based on 1.00 full and 0.00 reduced load factors.
- See Loadcase Report for load combinations and additional details.

Design Notes

- Plates designed for Cq at 0.80 and Rotational Tolerance of 10.0 degrees.
- Plates located at TC pitch breaks meet the prescriptive minimum size requirement to transfer unblocked diaphragm loads across those joints.

Deflection Summary

Creep (Kcr) = 2.00

TrussSpan	Limit	Actual(in)	Location
Vert LL	L/240	L/999(-0.06)	1- 3
Vert DL	L/120	L/976(-0.07)	1- 3
Vert CR	L/180	L/553(-0.13)	1- 3
Horz LL	0.75in	(0.02)	@Jt 1
Horz CR	1.25in	(0.03)	@Jt 1
Ohng CR	2L/180	2L/999(0.03)	1- 1

Bracing Summary

Top Chord: Structural Wood Sheathing
Bot Chord: Gypsum Board Sheathing
Web(s): None;

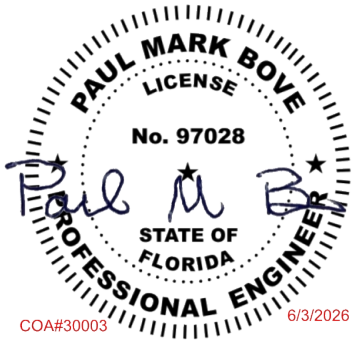

COA#30003 6/3/2026

NOTICE A copy of this design shall be furnished to the erection contractor. The design of this individual truss is based on design criteria and requirements supplied by the Truss Manufacturer and relies upon the accuracy and completeness of the information set forth by the Building Designer. A seal on this drawing indicates acceptance of professional engineering responsibility solely for the truss component design shown. See the cover page and the "Important Information & General Notes" page for additional information. All connector plates shall be manufactured by Simpson Strong-Tie Company, Inc in accordance with ESR-2762. All connector plates are 20 gauge, unless the specified plate size is followed by a "-18" which indicates an 18 gauge plate, or "S# 18", which indicates a high tension 18 gauge plate.

SIMPSON Strong-Tie
Component Solutions
Truss Studio V
2026.3.0.65
Helpdesk: 1-866-252-8606
CSHelp@strongtie.com

EngDrwg: 2026.3.1.0_PM

Project: P-1038 - Martinez		Truss ID: PB01	
Truss Mfr Customer: Turnsole Builders	19 Lumber Inc	Plies: 1	SID: 0004280715
Truss Mfr Contact: Monica Register		Spacing: 2-00-00 o.c.	TID: 318742
Project Location: Project location has not been provided		Quantity: 26	Date: 06 / 01 / 26
Project Note(s):		Weight: 31.9 lb	Page: 1 of 1

TC Plate offsets (X,Y): None

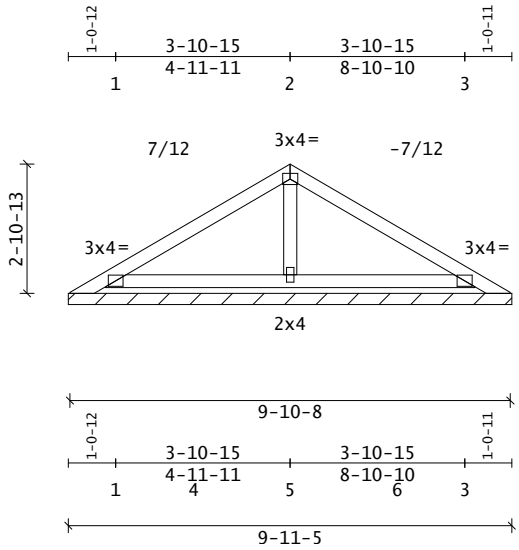

BC Plate offsets (X,Y): None

FBC-2023 | ASCE7-22 | TPI 1-2014

PSF	Live	Dead	Load Duration Factors		
TC	20.0	10.0	Live	Snow	Wind
BC	0.0	1.0	Lbr 1.25	N/A	1.60
Total		31.0	Plt 1.25	N/A	1.60
OH Soffit		2.0			

Spacing: 2-00-00 o.c. Plies: 1
Repetitive Member Increase: Yes
Green Lbr: No | Temp: T ≤ 100˚
Treated Lbr: No | Incised Lbr: No
Seasoned Lbr: Yes | Wet Service: No

Roof Snow Load (Pf) = N/A

Wind Speed (Vult) = 140 mph

Risk Category: II (I = 1.00)
Exposure Category: C
Bldg Dims: L = 61.0 ft B = 59.7 ft
MRH(h)= 18.0ft Kzt = 1.00 Ke = 1.00
Bldg Type: Enclosed
Wind DL (psf): TC = 5.0 BC = 1.0
End Vertical Exposed: L = Yes R = Yes
C&C Location: End Zone | a = 5-11-10
Design: MWFRS/C&C | Reactions: MWFRS
Net Uplift: 0.0 psf

Additional Live Load Checks

10 psf Non-Concurrent BCLL:	Yes
20 psf BCLL Limited Storage:	Yes
200 lb Moving BCLL Access:	No
300 lb Moving TCLL Maintenance:	No
300 lb TCLL/BCLL Person Loading:	No
2000 lb Moving TCLL Office:	No
Partial Length TCLL:	Yes

Plate Tolerance Checks

Fabrication: 20% (Cq = 0.80), u.n.o.
Rotation: +/- 10 degrees, u.n.o.

Material Summary

TC	2x4	SYP	#2
BC	2x4	SYP	#2
Webs	2x4	SYP	#2

Member Forces Summary (lb)

Max CSI in TC PANEL	1 - 2	0.19
Max CSI in BC PANEL	1 - 4	0.21
Max CSI in Web	5 - 2	0.07

Mbr	Jnt-Jnt	Tens	Comp	CSI
TC	1- 2	109	34	0.19
	2- 3	109	34	0.19
BC	1- 4	74	93	0.21
	3- 6	74	93	0.21
	4- 5	74	93	0.11
	5- 6	74	93	0.11
Web	2- 5	161	291	0.07

Reaction Summary (lb, u.n.o.)

	Maximum	LDF	Minimum	LDF
Horizontal @ Jnt 5:	73	1.60	-73	1.60
Jnt 1 - Jnt 3 (plf):	62	1.25	31	1.60

Reactions not shown: < 400 > -150

Loads Summary

- User-defined unbalanced Top Chord Live Loads (TCLL) occurring at 4-11-11 are based on 1.00 full and 0.00 reduced load factors.
- See Loadcase Report for load combinations and additional details.

Design Notes

- Plates designed for Cq at 0.80 and Rotational Tolerance of 10.0 degrees.
- Plates located at TC pitch breaks meet the prescriptive minimum size requirement to transfer unblocked diaphragm loads across those joints.

Deflection Summary

Creep (Kcr) = 2.00

TrussSpan	Limit	Actual(in)	Location
Vert LL	L/240	L/999(-0.01)	1- 4
Vert DL	L/120	L/999(-0.00)	1- 4
Vert CR	L/180	L/999(-0.01)	1- 4
Horz LL	0.75in	(0.01)	@Jt 3
Horz CR	1.25in	(0.01)	@Jt 3

Bracing Summary

Top Chord: Structural Wood Sheathing
Bot Chord: Gypsum Board Sheathing
Web(s): None;

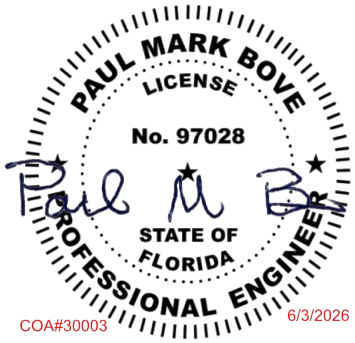

COA#30003 6/3/2026

NOTICE A copy of this design shall be furnished to the erection contractor. The design of this individual truss is based on design criteria and requirements supplied by the Truss Manufacturer and relies upon the accuracy and completeness of the information set forth by the Building Designer. A seal on this drawing indicates acceptance of professional engineering responsibility solely for the truss component design shown. See the cover page and the "Important Information & General Notes" page for additional information. All connector plates shall be manufactured by Simpson Strong-Tie Company, Inc in accordance with ESR-2762. All connector plates are 20 gauge, unless the specified plate size is followed by a "-18" which indicates an 18 gauge plate, or "S# 18", which indicates a high tension 18 gauge plate.

SIMPSON Strong-Tie

Component Solutions
Truss Studio V
2026.3.0.65
Helpdesk: 1-866-252-8606
CSHelp@strongtie.com

Project: P-1038 - Martinez		Truss ID: PB02	
Truss Mfr Customer: Turnsole Builders	19 Lumber Inc	Plies: 1	SID: 0004280716
Truss Mfr Contact: Monica Register		Spacing: 2-00-00 o.c.	TID: 318742
Project Location: Project location has not been provided		Quantity: 4	Date: 06 / 01 / 26
Project Note(s):		Weight: 26.3 lb	Page: 1 of 1

TC Plate offsets (X,Y): None

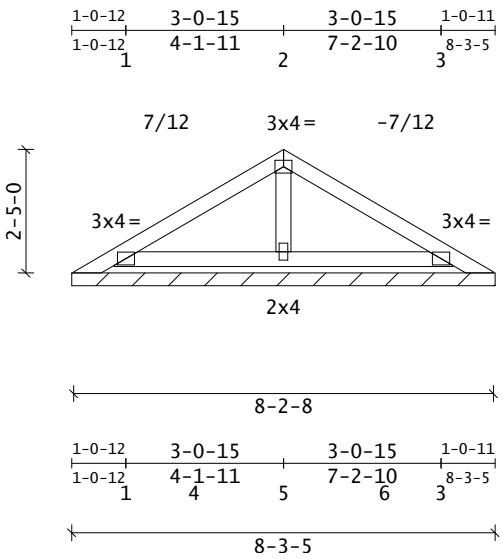

BC Plate offsets (X,Y): None

FBC-2023 | ASCE7-22 | TPI 1-2014

PSF	Live	Dead	Load Duration Factors		
TC	20.0	10.0	Live	Snow	Wind
BC	0.0	1.0	Lbr 1.25	N/A	1.60
Total		31.0	Plt 1.25	N/A	1.60
OH Soffit		2.0			

Spacing: 2-00-00 o.c. Plies: 1
Repetitive Member Increase: Yes
Green Lbr: No | Temp: T ≤ 100˚
Treated Lbr: No | Incised Lbr: No
Seasoned Lbr: Yes | Wet Service: No

Roof Snow Load (Pf) = N/A

Wind Speed (Vult) = 140 mph

Risk Category: II (I = 1.00)
Exposure Category: C
Bldg Dims: L = 61.0 ft B = 59.7 ft
MRH(h)= 18.0ft Kzt = 1.00 Ke = 1.00
Bldg Type: Enclosed
Wind DL (psf): TC = 5.0 BC = 1.0
End Vertical Exposed: L = Yes R = Yes
C&C Location: End Zone | a = 5-11-10
Design: MWFRS/C&C | Reactions: MWFRS
Net Uplift: 0.0 psf

Additional Live Load Checks

10 psf Non-Concurrent BCLL:	Yes
20 psf BCLL Limited Storage:	Yes
200 lb Moving BCLL Access:	No
300 lb Moving TCLL Maintenance:	No
300 lb TCLL/BCLL Person Loading:	No
2000 lb Moving TCLL Office:	No
Partial Length TCLL:	Yes

Plate Tolerance Checks

Fabrication: 20% (Cq = 0.80), u.n.o.
Rotation: +/- 10 degrees, u.n.o.

Material Summary

TC	2x4	SYP	#2
BC	2x4	SYP	#2
Webs	2x4	SYP	#2

Member Forces Summary (lb)

Max CSI in TC PANEL	1 - 2	0.13
Max CSI in BC PANEL	1 - 4	0.14
Max CSI in Web	5 - 2	0.05

Mbr	Jnt-Jnt	Tens	Comp	CSI
TC	1- 2	70	24	0.13
	2- 3	70	24	0.13
BC	1- 4	50	63	0.14
	3- 6	50	63	0.14
	4- 5	50	63	0.08
	5- 6	50	63	0.08
Web	2- 5	117	214	0.05

Reaction Summary (lb, u.n.o.)

	Maximum	LDF	Minimum	LDF
Horizontal @ Jnt 5:	57	1.60	-57	1.60
Jnt 1 - Jnt 3 (plf):	61	1.25	31	1.60

Reactions not shown: < 400 > -150

Loads Summary

- User-defined unbalanced Top Chord Live Loads (TCLL) occurring at 4-01-11 are based on 1.00 full and 0.00 reduced load factors.
- See Loadcase Report for load combinations and additional details.

Design Notes

- Plates designed for Cq at 0.80 and Rotational Tolerance of 10.0 degrees.
- Plates located at TC pitch breaks meet the prescriptive minimum size requirement to transfer unblocked diaphragm loads across those joints.

Deflection Summary

Creep (Kcr) = 2.00

TrussSpan	Limit	Actual(in)	Location
Vert LL	L/240	L/999(-0.00)	1- 4
Vert DL	L/120	L/999(-0.00)	1- 4
Vert CR	L/180	L/999(-0.01)	1- 4
Horz LL	0.75in	(0.00)	@Jt 3
Horz CR	1.25in	(0.00)	@Jt 3

Bracing Summary

Top Chord: Structural Wood Sheathing
Bot Chord: Gypsum Board Sheathing
Web(s): None;

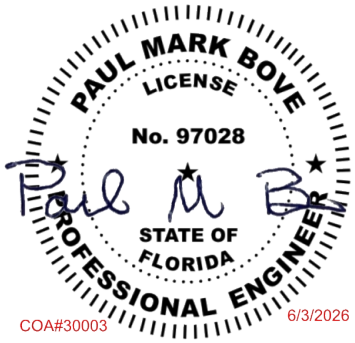

COA#30003 6/3/2026

NOTICE A copy of this design shall be furnished to the erection contractor. The design of this individual truss is based on design criteria and requirements supplied by the Truss Manufacturer and relies upon the accuracy and completeness of the information set forth by the Building Designer. A seal on this drawing indicates acceptance of professional engineering responsibility solely for the truss component design shown. See the cover page and the "Important Information & General Notes" page for additional information. All connector plates shall be manufactured by Simpson Strong-Tie Company, Inc in accordance with ESR-2762. All connector plates are 20 gauge, unless the specified plate size is followed by a "-18" which indicates an 18 gauge plate, or "S# 18", which indicates a high tension 18 gauge plate.

SIMPSON Strong-Tie
Component Solutions
Truss Studio V
2026.3.0.65
Helpdesk: 1-866-252-8606
CSHelp@strongtie.com

EngDrwg: 2026.3.1.0_PM

Project: P-1038 - Martinez		Truss ID: S01		
Truss Mfr Customer: Turnsole Builders	19 Lumber Inc	Plies: 1	SID:	0004280717
Truss Mfr Contact: Monica Register		Spacing: 2-00-00 o.c.	TID:	318742
Project Location: Project location has not been provided		Quantity: 8	Date:	06 / 03 / 26
Project Note(s):		Weight: 281.1 lb	Page:	1 of 1

TC Plate offsets (X,Y): J5(-1-12,-0-03), J7(0-07,-1-06), J8(0-04,0-07), J10(-0-04,0)

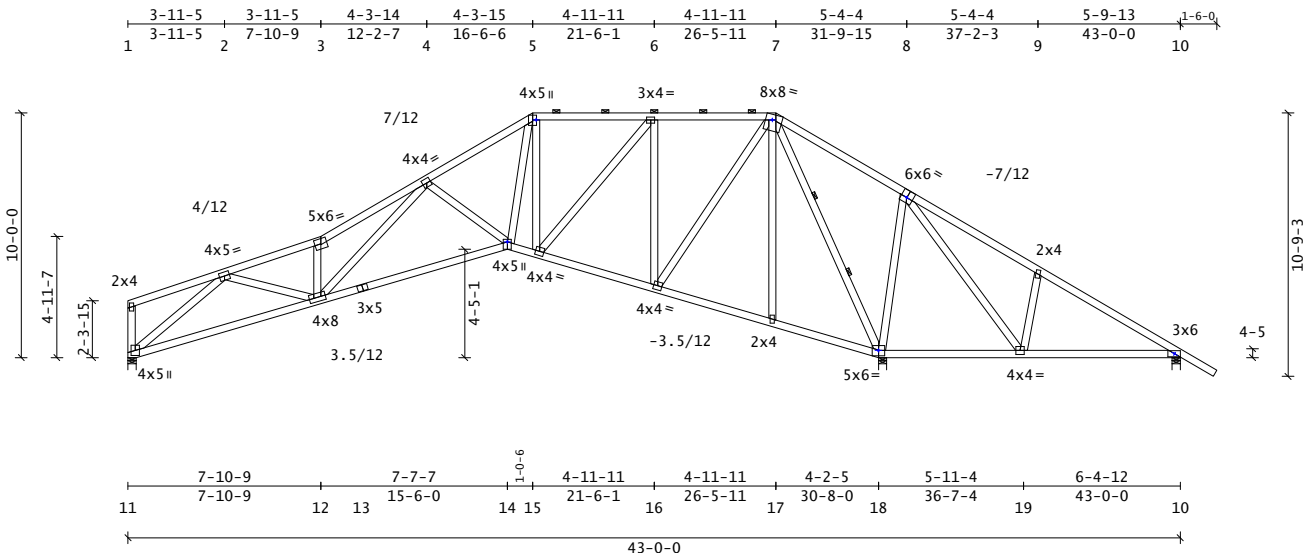

BC Plate offsets (X,Y): J14(0,-1-02), J18(0,-0-02)

FBC-2023 | ASCE7-22 | TPI 1-2014

PSF	Live	Dead	Load Duration Factors		
TC	20.0	10.0	Live	Snow	Wind
BC	0.0	10.0	Lbr 1.25	N/A	1.60
Total		40.0	Plt 1.25	N/A	1.60
OH Soffit		2.0			

Spacing: 2-00-00 o.c. Plies: 1
Repetitive Member Increase: Yes
Green Lbr: No | Temp: T ≤ 100˚
Treated Lbr: No | Incised Lbr: No
Seasoned Lbr: Yes | Wet Service: No

Roof Snow Load (Pf) = N/A

Wind Speed (Vult) = 140 mph

Risk Category: II (I = 1.00)
Exposure Category: C
Bldg Dims: L = 61.0 ft B = 59.7 ft
MRH(h)= 18.0ft Kzt = 1.00 Ke = 1.00
Bldg Type: Enclosed
Wind DL (psf): TC = 5.0 BC = 5.0
End Vertical Exposed: L = Yes R = Yes
C&C Location: End Zone | a = 5-11-10
Design: MWFRS/C&C | Reactions: MWFRS
Net Uplift: 0.0 psf

Additional Live Load Checks

10 psf Non-Concurrent BCLL:	Yes
20 psf BCLL Limited Storage:	Yes
200 lb Moving BCLL Access:	No
300 lb Moving TCLL Maintenance:	No
300 lb TCLL/BCLL Person Loading:	No
2000 lb Moving TCLL Office:	No
Partial Length TCLL:	Yes

Plate Tolerance Checks

Fabrication: 20% (Cq = 0.80), u.n.o.
Rotation: +/- 10 degrees, u.n.o.

Material Summary

TC	2x4	SYP	#2
BC	2x4	SYP	#2
Webs	2x4	SYP	#2

Member Forces Summary (lb)

Max CSI in TC PANEL	7 - 8	0.77
Max CSI in BC PANEL	12 - 13	0.76
Max CSI in Web	11 - 2	0.82

Mbr	Jnt-Jnt	Tens	Comp	CSI
TC	OH- 1	2	0	0.00
	1- 2	63	30	0.19
	2- 3	615	2370	0.38
	3- 4	771	2630	0.45
	4- 5	400	1497	0.34
	5- 6	355	988	0.34
	6- 7	284	440	0.54
	7- 8	1266	152	0.77
	8- 9	923	285	0.71
	9-10	900	288	0.56
	10-OH	49	0	0.19
BC	OH-11	1	0	0.00
	10-19	253	746	0.33
	11-12	1456	439	0.75
	12-13	1738	329	0.76
	13-14	1770	324	0.59
	14-15	1045	111	0.33
	15-16	473	7	0.21
	16-17	295	357	0.15
	17-18	292	351	0.14
	18-19	351	943	0.32
Web	1-11	69	104	0.07
	2-11	510	1849	0.82
	2-12	877	89	0.20
	3-12	306	784	0.11
	4-12	838	281	0.21
	4-14	318	563	0.19
	5-14	1206	189	0.27
	5-15	180	740	0.41
	6-15	857	176	0.19
	6-16	267	921	0.80
	7-16	1028	218	0.27
	7-17	194	0	0.04
	7-18	326	2028	0.78
	8-18	347	605	0.47
	8-19	568	207	0.23
	9-19	236	325	0.07

Reaction Summary (lb)

Jnt	XLocation	Model	Maximum	LDF	Minimum	LDF	Brg_Width	Req_Width	Type	Mat	PSI
11	01-12	Pin	1004	1.25	-298	1.60	04-00	01-08	Wall	SPF	531~
18	30-09-12	HRoll	2574	1.25	-669	1.60	04-00	03-04	Wall	SPF	531~
10	42-10-00	HRoll	220	1.25	-309	1.25	04-00	01-08	Wall	SPF	531~
Horizontal @ Jnt 11:			292	1.60	-361	1.60					

~ Includes adjustment for Bearing Area Factor, Cb.

Loads Summary

- User-defined unbalanced Top Chord Live Loads (TCLL) occurring at 21-06-01 are based on 1.00 full and 0.00 reduced load factors.
- See Loadcase Report for load combinations and additional details.

Design Notes

- Plates designed for Cq at 0.80 and Rotational Tolerance of 10.0 degrees.
- Plates located at TC pitch breaks meet the prescriptive minimum size requirement to transfer unblocked diaphragm loads across those joints.

Installation Notes

- Continuous Lateral Restraint (CLR) rows require diagonal bracing per D-WEBCLRBRACE. Alternatively, see D-WEBREINFORCE.

Deflection Summary

Creep (Kcr) = 2.00

TrussSpan	Limit	Actual(in)	Location
Vert LL	L/240	L/999(-0.18)	12-14
Vert DL	L/120	L/999(-0.25)	12-14
Vert CR	L/180	L/851(-0.43)	12-14
Horz LL	0.75in	(0.12)	@Jt18
Horz CR	1.25in	(0.24)	@Jt18
Ohng CR	2L/180	2L/999(0.01)	10-10

Bracing Summary

Top Chord: Structural Wood Sheathing
Bot Chord: Gypsum Board Sheathing
Purlins:

Mbr	Start	End	Spacing
TC	17-04-05	25-07-11	2-00-00

PAUL MARK BOVE
LICENSE
No. 97028
STATE OF FLORIDA
PROFESSIONAL ENGINEER
COA#30003
6/3/2026

NOTICE A copy of this design shall be furnished to the erection contractor. The design of this individual truss is based on design criteria and requirements supplied by the Truss Manufacturer and relies upon the accuracy and completeness of the information set forth by the Building Designer. A seal on this drawing indicates acceptance of professional engineering responsibility solely for the truss component design shown. See the cover page and the "Important Information & General Notes" page for additional information. All connector plates shall be manufactured by Simpson Strong-Tie Company, Inc in accordance with ESR-2762. All connector plates are 20 gauge, unless the specified plate size is followed by a "-18" which indicates an 18 gauge plate, or "S# 18", which indicates a high tension 18 gauge plate.

SIMPSON Strong-Tie
Component Solutions
Truss Studio V
2026.3.0.65
Helpdesk: 1-866-252-8606
CSHelp@strongtie.com

EngDrwg: 2026.3.1.0_PM

Project: P-1038 - Martinez		Truss ID: S02		
Truss Mfr Customer: Turnsole Builders	19 Lumber Inc	Plies: 1	SID: 0004280718	
Truss Mfr Contact: Monica Register		Spacing: 2-00-00 o.c.	TID: 318742	
Project Location: Project location has not been provided		Quantity: 1	Date: 06 / 03 / 26	
Project Note(s):		Weight: 278.5 lb	Page: 1 of 1	

TC Plate offsets (X,Y): J5(-1-12,-0-03), J7(0-07,-1-06), J11(-0-04,0)

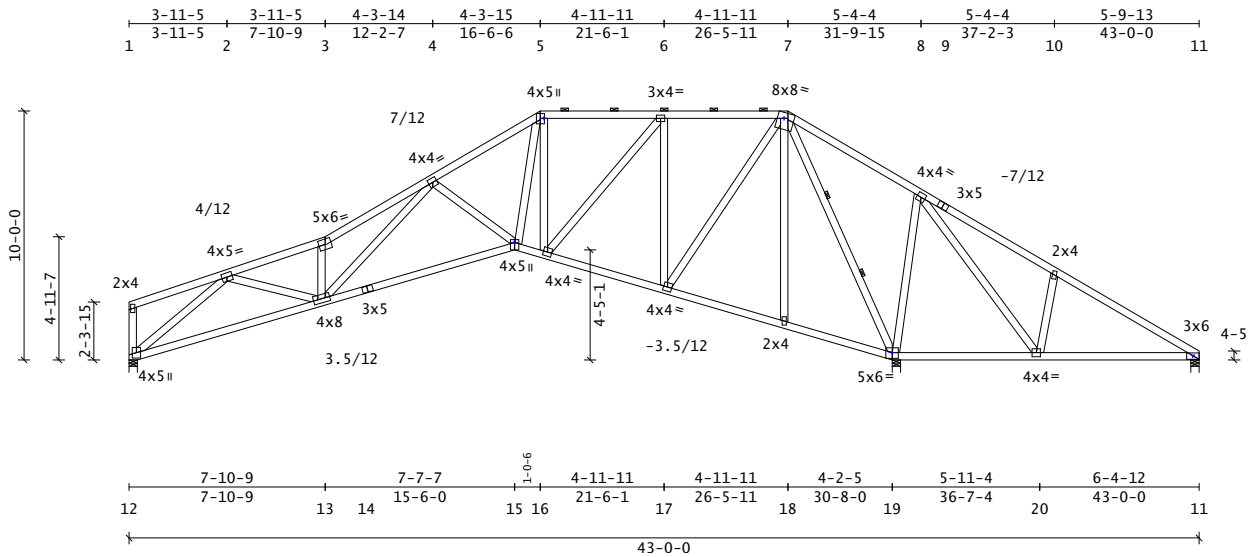

BC Plate offsets (X,Y): J15(0,-1-02), J19(0,-0-02)

FBC-2023 | ASCE7-22 | TPI 1-2014

PSF	Live	Dead	Load Duration Factors		
TC	20.0	10.0	Live	Snow	Wind
BC	0.0	10.0	Lbr 1.25	N/A	1.60
Total		40.0	Plt 1.25	N/A	1.60
OH Soffit		2.0			

Spacing: 2-00-00 o.c. Plies: 1
Repetitive Member Increase: Yes
Green Lbr: No | Temp: T ≤ 100˚
Treated Lbr: No | Incised Lbr: No
Seasoned Lbr: Yes | Wet Service: No

Roof Snow Load (Pf) = N/A

Wind Speed (Vult) = 140 mph

Risk Category: II (I = 1.00)
Exposure Category: C
Bldg Dims: L = 61.0 ft B = 59.7 ft
MRH(h)= 18.0ft Kzt = 1.00 Ke = 1.00
Bldg Type: Enclosed
Wind DL (psf): TC = 5.0 BC = 5.0
End Vertical Exposed: L = Yes R = Yes
C&C Location: End Zone | a = 5-11-10
Design: MWFRS/C&C | Reactions: MWFRS
Net Uplift: 0.0 psf

Additional Live Load Checks

10 psf Non-Concurrent BCLL:	Yes
20 psf BCLL Limited Storage:	Yes
200 lb Moving BCLL Access:	No
300 lb Moving TCLL Maintenance:	No
300 lb TCLL/BCLL Person Loading:	No
2000 lb Moving TCLL Office:	No
Partial Length TCLL:	Yes

Plate Tolerance Checks

Fabrication: 20% (Cq = 0.80), u.n.o.
Rotation: +/- 10 degrees, u.n.o.

Material Summary

TC	2x4	SYP	#2
BC	2x4	SYP	#2
Webs	2x4	SYP	#2

Member Forces Summary (lb)

Max CSI in TC PANEL	7 - 8	0.76
Max CSI in BC PANEL	13 - 14	0.76
Max CSI in Web	12 - 2	0.82

Mbr	Jnt-Jnt	Tens	Comp	CSI
TC	OH- 1	2	0	0.00
	1- 2	63	30	0.19
	2- 3	634	2373	0.38
	3- 4	791	2633	0.46
	4- 5	421	1500	0.34
	5- 6	367	991	0.34
	6- 7	282	443	0.54
	7- 8	1249	165	0.76
	8- 9	911	272	0.70
	9-10	902	295	0.55
	10-11	889	299	0.57
BC	OH-12	1	0	0.00
	11-20	243	735	0.34
	12-13	1458	462	0.75
	13-14	1741	356	0.76
	14-15	1773	350	0.59
	15-16	1048	135	0.33
	16-17	476	41	0.21
	17-18	267	270	0.15
	18-19	264	266	0.14
	19-20	339	935	0.32
Web	1-12	69	104	0.07
	2-12	521	1851	0.82
	2-13	878	98	0.20
	3-13	310	785	0.11
	4-13	838	281	0.21
	4-15	318	563	0.19
	5-15	1208	203	0.27
	5-16	190	739	0.41
	6-16	857	186	0.19
	6-17	281	921	0.80
	7-17	1029	233	0.29
	7-18	194	0	0.04
	7-19	353	2017	0.78
	8-19	355	611	0.48
	8-20	582	226	0.26
	10-20	245	332	0.07

Reaction Summary (lb)

Jnt	XLocation	Model	Maximum	LDF	Minimum	LDF	Brg_Width	Req_Width	Type	Mat	PSI
12	01-12	Pin	1005	1.25	-292	1.60	04-00	01-08	Wall	SPF	531~
19	30-09-12	HRoll	2571	1.25	-693	1.60	04-00	03-04	Wall	SPF	531~
11	42-10-00	HRoll	210	1.60	-346	1.25	04-00	01-08	Wall	SPF	531~
Horizontal @ Jnt 12:			309	1.60	-340	1.60					

~ Includes adjustment for Bearing Area Factor, Cb.

Loads Summary

- User-defined unbalanced Top Chord Live Loads (TCLL) occurring at 21-06-01 are based on 1.00 full and 0.00 reduced load factors.
- See Loadcase Report for load combinations and additional details.

Design Notes

- Plates designed for Cq at 0.80 and Rotational Tolerance of 10.0 degrees.
- Plates located at TC pitch breaks meet the prescriptive minimum size requirement to transfer unblocked diaphragm loads across those joints.

Installation Notes

- Continuous Lateral Restraint (CLR) rows require diagonal bracing per D-WEBCLRBRACE. Alternatively, see D-WEBREINFORCE.

Deflection Summary

Creep (Kcr) = 2.00

TrussSpan	Limit	Actual(in)	Location
Vert LL	L/240	L/999(-0.18)	13-15
Vert DL	L/120	L/999(-0.25)	13-15
Vert CR	L/180	L/850(-0.43)	13-15
Horz LL	0.75in	(0.12)	@Jt19
Horz CR	1.25in	(0.24)	@Jt19

Bracing Summary

Top Chord: Structural Wood Sheathing
Bot Chord: Gypsum Board Sheathing
Purlins:

Mbr	Start	End	Spacing
TC	17-04-05	25-07-11	2-00-00

PAUL MARK BOVE
LICENSE
No. 97028
STATE OF FLORIDA
PROFESSIONAL ENGINEER
COA#30003
6/3/2026

NOTICE A copy of this design shall be furnished to the erection contractor. The design of this individual truss is based on design criteria and requirements supplied by the Truss Manufacturer and relies upon the accuracy and completeness of the information set forth by the Building Designer. A seal on this drawing indicates acceptance of professional engineering responsibility solely for the truss component design shown. See the cover page and the "Important Information & General Notes" page for additional information. All connector plates shall be manufactured by Simpson Strong-Tie Company, Inc in accordance with ESR-2762. All connector plates are 20 gauge, unless the specified plate size is followed by a "-18" which indicates an 18 gauge plate, or "S# 18", which indicates a high tension 18 gauge plate.

SIMPSON Strong-Tie
Component Solutions
Truss Studio V
2026.3.0.65
Helpdesk: 1-866-252-8606
CSHelp@strongtie.com

EngDrwg: 2026.3.1.0_PM

Project: P-1038 - Martinez		Truss ID: T01		
Truss Mfr Customer: Turnsole Builders	19 Lumber Inc	Plies: 1	SID: 0004280719	
Truss Mfr Contact: Monica Register		Spacing: 2-00-00 o.c.	TID: 318742	
Project Location: Project location has not been provided		Quantity: 6	Date: 06 / 01 / 26	
Project Note(s):		Weight: 246.8 lb	Page: 1 of 1	

TC Plate offsets (X,Y): J1(0,0-04), J3(-0-04,0-07), J4(-1-12,0), J6(-0-02,-0-03)

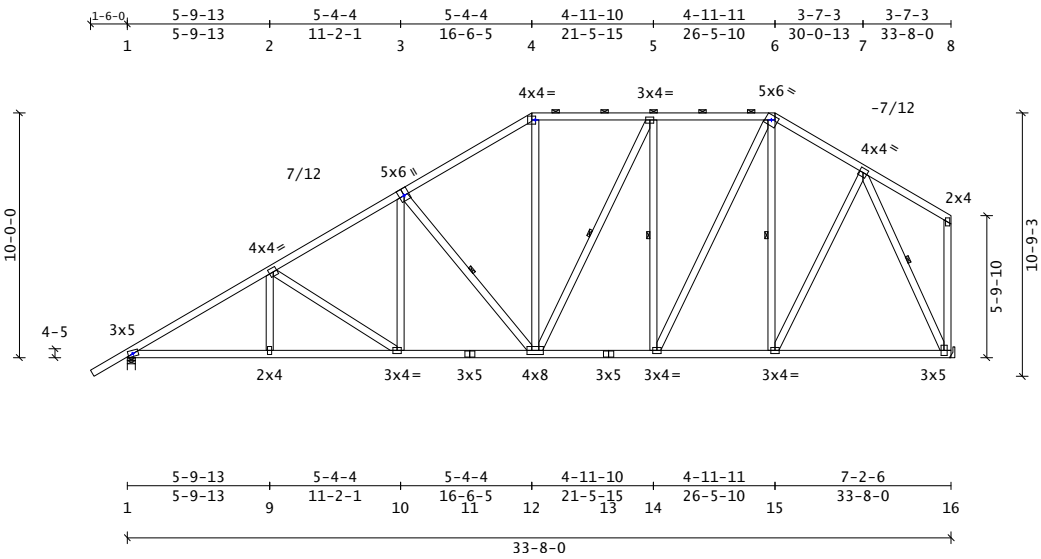

BC Plate offsets (X,Y): None

FBC-2023 | ASCE7-22 | TPI 1-2014

PSF	Live	Dead	Load Duration Factors		
TC	20.0	10.0	Live	Snow	Wind
BC	0.0	10.0	Lbr 1.25	N/A	1.60
Total		40.0	Plt 1.25	N/A	1.60
OH Soffit		2.0			

Spacing: 2-00-00 o.c. Plies: 1
Repetitive Member Increase: Yes
Green Lbr: No | Temp: T ≤ 100˚
Treated Lbr: No | Incised Lbr: No
Seasoned Lbr: Yes | Wet Service: No

Roof Snow Load (Pf) = N/A

Wind Speed (Vult) = 140 mph
Risk Category: II (I = 1.00)
Exposure Category: C
Bldg Dims: L = 61.0 ft B = 59.7 ft
MRH(h)= 18.0ft Kzt = 1.00 Ke = 1.00
Bldg Type: Enclosed
Wind DL (psf): TC = 5.0 BC = 5.0
End Vertical Exposed: L = Yes R = Yes
C&C Location: End Zone | a = 5-11-10
Design: MWFRS/C&C | Reactions: MWFRS
Net Uplift: 0.0 psf

Additional Live Load Checks

10 psf Non-Concurrent BCLL:	Yes
20 psf BCLL Limited Storage:	Yes
200 lb Moving BCLL Access:	No
300 lb Moving TCLL Maintenance:	No
300 lb TCLL/BCLL Person Loading:	No
2000 lb Moving TCLL Office:	No
Partial Length TCLL:	Yes

Plate Tolerance Checks
Fabrication: 20% (Cq = 0.80), u.n.o.
Rotation: +/- 10 degrees, u.n.o.

Material Summary

TC	2x4	SYP	#2
BC	2x4	SYP	#2
Webs	2x4	SYP	#2

Member Forces Summary (lb)

Max CSI in TC PANEL	2 - 3	0.47
Max CSI in BC PANEL	15 - 16	0.78
Max CSI in Web	14 - 6	0.44

Mbr	Jnt-Jnt	Tens	Comp	CSI
TC	OH- 1	49	0	0.19
	1- 2	624	2230	0.44
	2- 3	595	1844	0.47
	3- 4	550	1420	0.45
	4- 5	527	1159	0.44
	5- 6	505	1095	0.43
	6- 7	436	999	0.26
	7- 8	152	75	0.19
	8-OH	4	0	0.00
BC	1- 9	1853	550	0.59
	9-10	1853	550	0.51
	10-11	1521	452	0.44
	11-12	1521	452	0.47
	12-13	1095	322	0.41
	13-14	1095	322	0.36
	14-15	821	225	0.67
	15-16	546	170	0.78
	16-OH	0	0	0.00
Web	2- 9	202	0	0.04
	2-10	189	389	0.27
	3-10	379	50	0.08
	3-12	279	580	0.19
	4-12	360	116	0.19
	5-12	290	138	0.07
	5-14	230	492	0.21
	6-14	635	215	0.44
	6-15	182	345	0.15
	7-15	607	122	0.15
	7-16	329	1336	0.43
	8-16	115	88	0.41

Reaction Summary (lb)

Jnt	XLocation	Model	Maximum	LDF	Minimum	LDF	Brg_Width	Req_Width	Type	Mat	PSI
1	02-00	Pin	1446	1.25	-422	1.60	04-00	01-13	Wall	SPF	531~
16	33-06-04	HRoll	1393	1.25	-385	1.60	01-08	-	Hgr	-	-
Horizontal @ Jnt 1:			446	1.60	-278	1.60					
Horizontal @ Jnt 16:			446	1.60	-278	1.60					

~ Includes adjustment for Bearing Area Factor, Cb.

Loads Summary
· User-defined unbalanced Top Chord Live Loads (TCLL) occurring at 21-06-00 are based on 1.00 full and 0.00 reduced load factors.
· See Loadcase Report for load combinations and additional details.

Design Notes
· Plates designed for Cq at 0.80 and Rotational Tolerance of 10.0 degrees.
· Plates located at TC pitch breaks meet the prescriptive minimum size requirement to transfer unblocked diaphragm loads across those joints.

Installation Notes
· Continuous Lateral Restraint (CLR) rows require diagonal bracing per D-WEBCLRBRACE. Alternatively, see D-WEBREINFORCE.

Deflection Summary
Creep (Kcr) = 2.00

TrussSpan	Limit	Actual(in)	Location
Vert LL	L/240	L/999(-0.14)	15-16
Vert DL	L/120	L/999(-0.11)	15-16
Vert CR	L/180	L/999(-0.25)	15-16
Horz LL	0.75in	(0.03)	@Jt16
Horz CR	1.25in	(0.07)	@Jt16
Ohng CR	2L/180	2L/999(0.01)	1- 1

Bracing Summary
Top Chord: Structural Wood Sheathing
Bot Chord: Gypsum Board Sheathing
Purlins:

Mbr	Start	End	Spacing
TC	17-04-05	25-07-11	2-00-00

Web(s): Continuous Lateral Restraint;
Sgl: 3-12, 12-5, 14-5, 15-6, 7-16

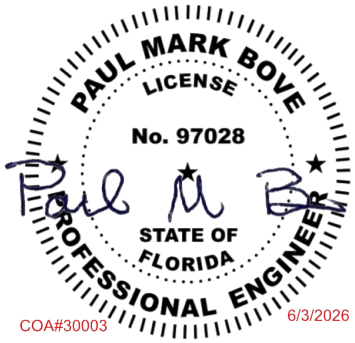

COA#30003 6/3/2026

NOTICE A copy of this design shall be furnished to the erection contractor. The design of this individual truss is based on design criteria and requirements supplied by the Truss Manufacturer and relies upon the accuracy and completeness of the information set forth by the Building Designer. A seal on this drawing indicates acceptance of professional engineering responsibility solely for the truss component design shown. See the cover page and the "Important Information & General Notes" page for additional information. All connector plates shall be manufactured by Simpson Strong-Tie Company, Inc in accordance with ESR-2762. All connector plates are 20 gauge, unless the specified plate size is followed by a "-18" which indicates an 18 gauge plate, or "S# 18", which indicates a high tension 18 gauge plate.

SIMPSON Strong-Tie
Component Solutions
Truss Studio V
2026.3.0.65
Helpdesk: 1-866-252-8606
CSHelp@strongtie.com

EngDrwg: 2026.3.1.0_PM

Project: P-1038 - Martinez		Truss ID: T02	
Truss Mfr Customer: Turnsole Builders	19 Lumber Inc	Plies: 1	SID: 0004280720
Truss Mfr Contact: Monica Register		Spacing: 2-00-00 o.c.	TID: 318742
Project Location: Project location has not been provided		Quantity: 7	Date: 06 / 01 / 26
Project Note(s):		Weight: 246.8 lb	Page: 1 of 1

TC Plate offsets (X,Y): J5(-1-12,0)

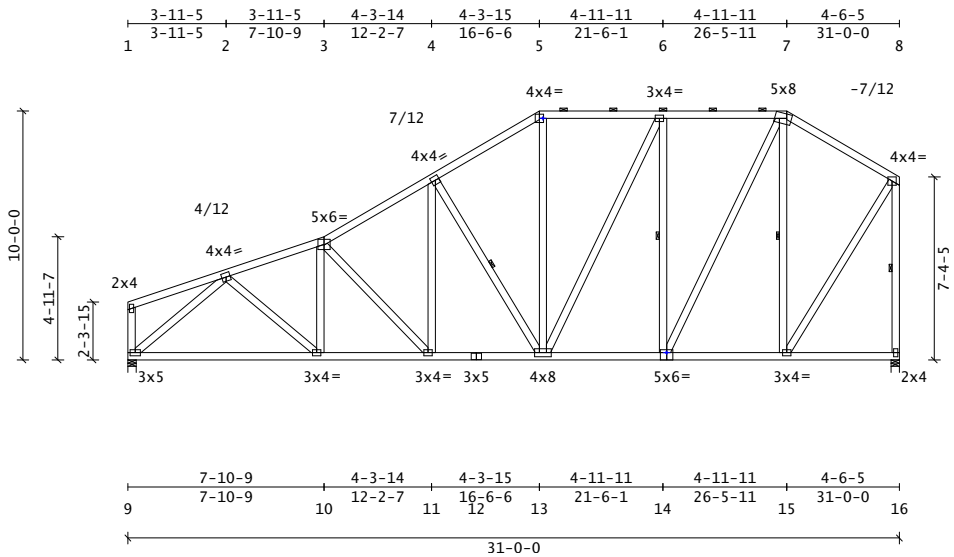

BC Plate offsets (X,Y): J14(0,-1-00)

FBC-2023 | ASCE7-22 | TPI 1-2014

PSF	Live	Dead	Load Duration Factors		
TC	20.0	10.0	Live	Snow	Wind
BC	0.0	10.0	Lbr 1.25	N/A	1.60
Total		40.0	Plt 1.25	N/A	1.60
OH Soffit		2.0			

Spacing: 2-00-00 o.c. Plies: 1
Repetitive Member Increase: Yes
Green Lbr: No | Temp: T ≤ 100˚
Treated Lbr: No | Incised Lbr: No
Seasoned Lbr: Yes | Wet Service: No

Roof Snow Load (Pf) = N/A

Wind Speed (Vult) = 140 mph

Risk Category: II (I = 1.00)
Exposure Category: C
Bldg Dims: L = 61.0 ft B = 59.7 ft
MRH(h)= 18.0ft Kzt = 1.00 Ke = 1.00
Bldg Type: Enclosed
Wind DL (psf): TC = 5.0 BC = 5.0
End Vertical Exposed: L = Yes R = Yes
C&C Location: End Zone | a = 5-11-10
Design: MWFRS/C&C | Reactions: MWFRS
Net Uplift: 0.0 psf

Additional Live Load Checks

10 psf Non-Concurrent BCLL:	Yes
20 psf BCLL Limited Storage:	Yes
200 lb Moving BCLL Access:	No
300 lb Moving TCLL Maintenance:	No
300 lb TCLL/BCLL Person Loading:	No
2000 lb Moving TCLL Office:	No
Partial Length TCLL:	Yes

Plate Tolerance Checks

Fabrication: 20% (Cq = 0.80), u.n.o.
Rotation: +/- 10 degrees, u.n.o.

Material Summary

TC	2x4	SYP	#2
BC	2x4	SYP	#2
Webs	2x4	SYP	#2

Member Forces Summary (lb)

Max CSI in TC PANEL	5 - 6	0.45
Max CSI in BC PANEL	9 - 10	0.69
Max CSI in Web	16 - 8	0.79

Mbr	Jnt-Jnt	Tens	Comp	CSI
TC	OH- 1	2	0	0.00
	1- 2	62	29	0.22
	2- 3	515	1679	0.38
	3- 4	525	1521	0.38
	4- 5	495	1196	0.37
	5- 6	469	972	0.45
	6- 7	427	830	0.44
	7- 8	319	635	0.32
	8-OH	4	0	0.00
BC	OH- 9	0	0	0.00
	9-10	1206	512	0.69
	10-11	1562	497	0.63
	11-12	1273	439	0.32
	12-13	1273	439	0.39
	13-14	839	314	0.37
	14-15	497	207	0.32
	15-16	362	211	0.17
	16-OH	0	0	0.00
Web	1- 9	69	102	0.07
	2- 9	460	1613	0.72
	2-10	465	35	0.10
	3-10	101	154	0.05
	3-11	162	414	0.29
	4-11	376	85	0.08
	4-13	277	569	0.19
	5-13	340	106	0.17
	6-13	375	137	0.28
	6-14	259	590	0.26
	7-14	758	235	0.48
	7-15	254	676	0.29
	8-15	925	242	0.30
	8-16	378	1201	0.79

Reaction Summary (lb)

Jnt	XLocation	Model	Maximum	LDF	Minimum	LDF	Brg_Width	Req_Width	Type	Mat	PSI
9	01-12	Pin	1239	1.25	-343	1.60	04-00	01-09	Wall	SPF	531~
16	30-10-04	HRoll	1240	1.25	-358	1.60	04-00	01-09	Wall	SPF	531~
Horizontal @ Jnt 9:			440	1.60	-305	1.60					
Horizontal @ Jnt 16:			440	1.60	-305	1.60					

~ Includes adjustment for Bearing Area Factor, Cb.

Loads Summary

- User-defined unbalanced Top Chord Live Loads (TCLL) occurring at 21-06-01 are based on 1.00 full and 0.00 reduced load factors.
- See Loadcase Report for load combinations and additional details.

Design Notes

- Plates designed for Cq at 0.80 and Rotational Tolerance of 10.0 degrees.
- Plates located at TC pitch breaks meet the prescriptive minimum size requirement to transfer unblocked diaphragm loads across those joints.

Installation Notes

- Continuous Lateral Restraint (CLR) rows require diagonal bracing per D-WEBCLRBRACE. Alternatively, see D-WEBREINFORCE.

Deflection Summary

Creep (Kcr) = 2.00

TrussSpan	Limit	Actual(in)	Location
Vert LL	L/240	L/999(-0.14)	9-10
Vert DL	L/120	L/999(-0.15)	9-10
Vert CR	L/180	L/999(-0.29)	9-10
Horz LL	0.75in	(0.02)	@Jt16
Horz CR	1.25in	(0.05)	@Jt16

Bracing Summary

Top Chord: Structural Wood Sheathing
Bot Chord: Gypsum Board Sheathing
Purlins:

Mbr	Start	End	Spacing
TC	17-04-05	25-07-11	2-00-00

Web(s): Continuous Lateral Restraint;
Sgl: 4-13, 14-6, 15-7, 16-8

PAUL MARK BOVE
LICENSE
No. 97028
STATE OF FLORIDA
PROFESSIONAL ENGINEER

COA#30003 6/3/2026

NOTICE A copy of this design shall be furnished to the erection contractor. The design of this individual truss is based on design criteria and requirements supplied by the Truss Manufacturer and relies upon the accuracy and completeness of the information set forth by the Building Designer. A seal on this drawing indicates acceptance of professional engineering responsibility solely for the truss component design shown. See the cover page and the "Important Information & General Notes" page for additional information. All connector plates shall be manufactured by Simpson Strong-Tie Company, Inc in accordance with ESR-2762. All connector plates are 20 gauge, unless the specified plate size is followed by a "-18" which indicates an 18 gauge plate, or "S# 18", which indicates a high tension 18 gauge plate.

SIMPSON Strong-Tie
Component Solutions
Truss Studio V
2026.3.0.65
Helpdesk: 1-866-252-8606
CSHelp@strongtie.com

EngDrwg: 2026.3.1.0_PM

Project: P-1038 - Martinez		Truss ID: T03	
Truss Mfr Customer: Turnsole Builders	19 Lumber Inc	Plies: 1	SID: 0004280721
Truss Mfr Contact: Monica Register		Spacing: 2-00-00 o.c.	TID: 318742
Project Location: Project location has not been provided		Quantity: 3	Date: 06 / 01 / 26
Project Note(s):		Weight: 222.8 lb	Page: 1 of 1

TC Plate offsets (X,Y): J1(0,0-01), J3(-0-04,0-07), J4(-1-12,0)

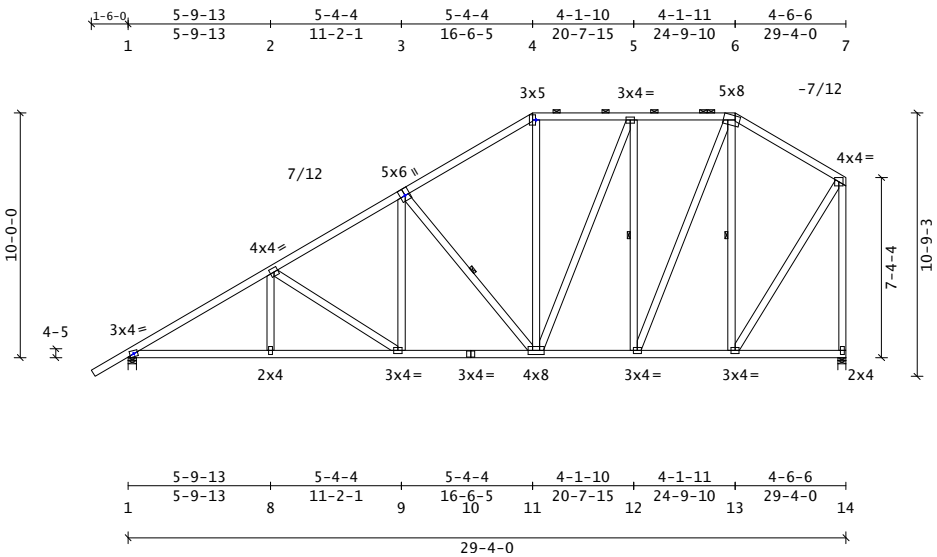

BC Plate offsets (X,Y): None

FBC-2023 | ASCE7-22 | TPI 1-2014

PSF	Live	Dead	Load Duration Factors		
TC	20.0	10.0	Live	Snow	Wind
BC	0.0	10.0	Lbr 1.25	N/A	1.60
Total		40.0	Plt 1.25	N/A	1.60
OH Soffit		2.0			

Spacing: 2-00-00 o.c. Plies: 1
Repetitive Member Increase: Yes
Green Lbr: No | Temp: T ≤ 100˚
Treated Lbr: No | Incised Lbr: No
Seasoned Lbr: Yes | Wet Service: No

Roof Snow Load (Pf) = N/A

Wind Speed (Vult) = 140 mph

Risk Category: II (I = 1.00)
Exposure Category: C
Bldg Dims: L = 61.0 ft B = 59.7 ft
MRH(h)= 18.0ft Kzt = 1.00 Ke = 1.00
Bldg Type: Enclosed
Wind DL (psf): TC = 5.0 BC = 5.0
End Vertical Exposed: L = Yes R = Yes
C&C Location: End Zone | a = 5-11-10
Design: MWFRS/C&C | Reactions: MWFRS
Net Uplift: 0.0 psf

Additional Live Load Checks

10 psf Non-Concurrent BCLL:	Yes
20 psf BCLL Limited Storage:	Yes
200 lb Moving BCLL Access:	No
300 lb Moving TCLL Maintenance:	No
300 lb TCLL/BCLL Person Loading:	No
2000 lb Moving TCLL Office:	No
Partial Length TCLL:	Yes

Plate Tolerance Checks

Fabrication: 20% (Cq = 0.80), u.n.o.
Rotation: +/- 10 degrees, u.n.o.

Material Summary

TC	2x4	SYP	#2
BC	2x4	SYP	#2
Webs	2x4	SYP	#2

Member Forces Summary (lb)

Max CSI in TC PANEL	2 - 3	0.44
Max CSI in BC PANEL	1 - 8	0.50
Max CSI in Web	14 - 7	1.00

Mbr	Jnt-Jnt	Tens	Comp	CSI
TC	OH- 1	49	0	0.19
	1- 2	524	1903	0.41
	2- 3	492	1509	0.44
	3- 4	447	1080	0.42
	4- 5	437	857	0.31
	5- 6	398	728	0.30
	6- 7	309	599	0.32
	7-OH	4	0	0.00
BC	1- 8	1572	529	0.50
	8- 9	1572	529	0.50
	9-10	1231	429	0.45
	10-11	1231	429	0.42
	11-12	728	283	0.34
	12-13	466	199	0.28
	13-14	399	241	0.21
	14-OH	0	0	0.00
Web	2- 8	207	0	0.04
	2- 9	193	401	0.27
	3- 9	386	50	0.08
	3-11	280	589	0.20
	4-11	236	72	0.12
	5-11	399	144	0.28
	5-12	238	564	0.24
	6-12	684	219	0.42
	6-13	240	628	0.27
	7-13	865	227	0.28
	7-14	359	1132	1.00

Reaction Summary (lb)

Jnt	XLocation	Model	Maximum	LDF	Minimum	LDF	Brg_Width	Req_Width	Type	Mat	PSI
1	02-00	Pin	1273	1.25	-369	1.60	04-00	01-10	Wall	SPF	531~
14	29-02-04	HRoll	1171	1.25	-339	1.60	04-00	01-08	Wall	SPF	531~
Horizontal @ Jnt 1:			476	1.60	-272	1.60					
Horizontal @ Jnt 14:			476	1.60	-272	1.60					

~ Includes adjustment for Bearing Area Factor, Cb.

Loads Summary

- User-defined unbalanced Top Chord Live Loads (TCLL) occurring at 20-08-00 are based on 1.00 full and 0.00 reduced load factors.
- See Loadcase Report for load combinations and additional details.

Design Notes

- Plates designed for Cq at 0.80 and Rotational Tolerance of 10.0 degrees.
- Plates located at TC pitch breaks meet the prescriptive minimum size requirement to transfer unblocked diaphragm loads across those joints.

Installation Notes

- Continuous Lateral Restraint (CLR) rows require diagonal bracing per D-WEBCLRBRACE. Alternatively, see D-WEBREINFORCE.

Deflection Summary

Creep (Kcr) = 2.00

TrussSpan	Limit	Actual(in)	Location
Vert LL	L/240	L/999(-0.07)	9-11
Vert DL	L/120	L/999(-0.08)	9-11
Vert CR	L/180	L/999(-0.15)	9-11
Horz LL	0.75in	(0.02)	@Jt14
Horz CR	1.25in	(0.05)	@Jt14
Ohng CR	2L/180	2L/999(0.01)	1- 1

Bracing Summary

Top Chord: Structural Wood Sheathing
Bot Chord: Gypsum Board Sheathing
Purlins:

Mbr	Start	End	Spacing
TC	17-04-05	23-11-11	2-00-00

Web(s): Continuous Lateral Restraint;
Sgl: 3-11, 12-5, 13-6

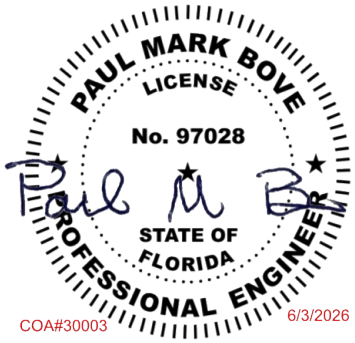

COA#30003 6/3/2026

NOTICE A copy of this design shall be furnished to the erection contractor. The design of this individual truss is based on design criteria and requirements supplied by the Truss Manufacturer and relies upon the accuracy and completeness of the information set forth by the Building Designer. A seal on this drawing indicates acceptance of professional engineering responsibility solely for the truss component design shown. See the cover page and the "Important Information & General Notes" page for additional information. All connector plates shall be manufactured by Simpson Strong-Tie Company, Inc in accordance with ESR-2762. All connector plates are 20 gauge, unless the specified plate size is followed by a "-18" which indicates an 18 gauge plate, or "S# 18", which indicates a high tension 18 gauge plate.

SIMPSON Strong-Tie
Component Solutions
Truss Studio V
2026.3.0.65
Helpdesk: 1-866-252-8606
CSHelp@strongtie.com

EngDrwg: 2026.3.1.0_PM

Project: P-1038 - Martinez		Truss ID: T04	
Truss Mfr Customer: Turnsole Builders	19 Lumber Inc	Plies: 1	SID: 0004280722
Truss Mfr Contact: Monica Register		Spacing: 2-00-00 o.c.	TID: 318742
Project Location: Project location has not been provided		Quantity: 5	Date: 06 / 03 / 26
Project Note(s):		Weight: 153.9 lb	Page: 1 of 1

TC Plate offsets (X,Y): J3(-0-02,0-03), J4(0,1-02), J8(0,1-01), J9(0-02,0-03)

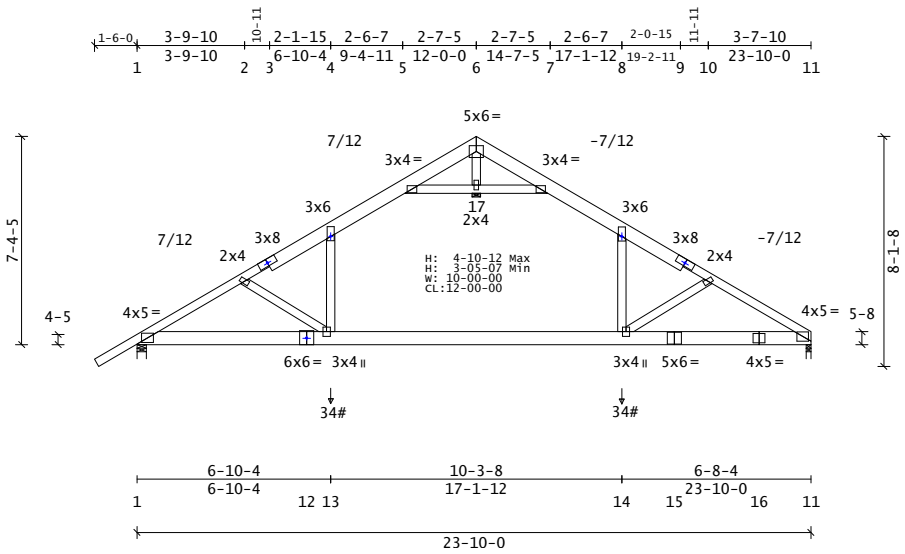

BC Plate offsets (X,Y): J12(0,0-04)

FBC-2023 | ASCE7-22 | TPI 1-2014

PSF	Live	Dead	Load Duration Factors		
TC	20.0	10.0	Live	Snow	Wind
BC	0.0	10.0	Lbr 1.25	N/A	1.60
Total		40.0	Plt 1.25	N/A	1.60
OH Soffit		2.0			

Spacing: 2-00-00 o.c. Plies: 1
Repetitive Member Increase: Yes
Green Lbr: No | Temp: T ≤ 100˚
Treated Lbr: No | Incised Lbr: No
Seasoned Lbr: Yes | Wet Service: No

Roof Snow Load (Pf) = N/A

Wind Speed (Vult) = 140 mph

Risk Category: II (I = 1.00)
Exposure Category: C
Bldg Dims: L = 61.0 ft B = 59.7 ft
MRH(h)= 18.0ft Kzt = 1.00 Ke = 1.00
Bldg Type: Enclosed
Wind DL (psf): TC = 5.0 BC = 5.0
End Vertical Exposed: L = Yes R = Yes
C&C Location: End Zone | a = 5-11-10
Design: MWFRS/C&C | Reactions: MWFRS
Net Uplift: 0.0 psf

Additional Live Load Checks

10 psf Non-Concurrent BCLL:	Yes
20 psf BCLL Limited Storage:	Yes
200 lb Moving BCLL Access:	No
300 lb Moving TCLL Maintenance:	No
300 lb TCLL/BCLL Person Loading:	No
2000 lb Moving TCLL Office:	No
Partial Length TCLL:	Yes

Plate Tolerance Checks

Fabrication: 20% (Cq = 0.80), u.n.o.
Rotation: +/- 10 degrees, u.n.o.

Material Summary

TC	2x4	SYP	#2	
	2x6	SYP	DSS	3-6 6-9
BC	2x6	SYP	DSS	
	2x6	SYP	#2	15-16 16-11
Webs	2x4	SYP	#2	
TB	2x4	SYP	#2	

Member Forces Summary (lb)

Max CSI in TC PANEL	1 - 2	0.63
Max CSI in BC PANEL	15 - 16	0.73
Max CSI in Web	5 - 17	0.30

Mbr	Jnt-Jnt	Tens	Comp	CSI
TC	OH- 1	51	0	0.19
	1- 2	228	2163	0.63
	2- 3	166	1949	0.62
	3- 4	171	1937	0.45
	4- 5	245	1404	0.44
	5- 6	494	0	0.47
	6- 7	490	0	0.48
	7- 8	244	1407	0.45
	8- 9	174	1929	0.43
	9-10	169	1940	0.58
	10-11	237	2141	0.61
BC	1-12	1883	148	0.34
	11-16	1857	158	0.51
	12-13	1883	148	0.39
	13-14	1537	23	0.71
	14-15	1857	158	0.38
	15-16	1857	158	0.73
Web	2-13	149	414	0.12
	4-13	1017	0	0.28
	5-17	234	2126	0.30
	6-17	59	0	0.01
	7-17	234	2126	0.30
	8-14	993	0	0.28
	10-14	161	486	0.12

Reaction Summary (lb)

Jnt	XLocation	Model	Maximum	LDF	Minimum	LDF	Brg_Width	Req_Width	Type	Mat	PSI
1	02-00	Pin	1416	1.25	-205	1.60	04-00	01-12	Wall	SPF	531~
11	23-09-00	HRoll >	1326	1.25	-154	1.60	02-00	01-11	Wall	SPF	531~
Horizontal @ Jnt 1:			241	1.60	-199	1.60					
> Critical @ Jnt 11:			1076	1.00							

~ Includes adjustment for Bearing Area Factor, Cb.

Loads Summary

· User-defined unbalanced Top Chord Live Loads (TCLL) occurring at 12-00-00 are based on 1.00 full and 0.00 reduced load factors.
· Attic space centered at 12-00-00 is loaded with 40.0 psf Live & 10.0 psf Dead Floor, 5.0 psf Dead Wall, 5.0 psf Dead Ceiling loads, and meets deflection criteria L/360.

· See Loadcase Report for load combinations and additional details.
Concentrated Loads (lbs) based on Max and Min:

Mbr	Location	Max	Min	Dir	DL/TL	Angle	Connection	Description
Web	6-10-04	34	17	V	1.00	90°	None	SidewallDL
Web	17-01-12	34	17	V	1.00	90°	None	SidewallDL

Design Notes

· Plates designed for Cq at 0.80 and Rotational Tolerance of 10.0 degrees.
· Plates located at TC pitch breaks meet the prescriptive minimum size requirement to transfer unblocked diaphragm loads across those joints.

Deflection Summary

Creep (Kcr) = 2.00

TrussSpan	Limit	Actual(in)	Location
Vert LL	L/240	L/594(-0.48)	13-14
Vert DL	L/120	L/841(-0.34)	13-14
Vert CR	L/180	L/348(-0.81)	13-14
Horz LL	0.75in	(0.02)	@Jt11
Horz CR	1.25in	(0.04)	@Jt11
Ohng CR	2L/180	2L/999(0.01)	1- 1

Bracing Summary

Top Chord: Structural Wood Sheathing
Bot Chord: Gypsum Board Sheathing
Attic tie beam (TB) & walls; bracing indicated or rigid sheathing.
Purlins:

Mbr	Start	End	Spacing
TB	9-05-11	14-06-05	2-07-00

Web(s): Continuous Lateral Restraint;

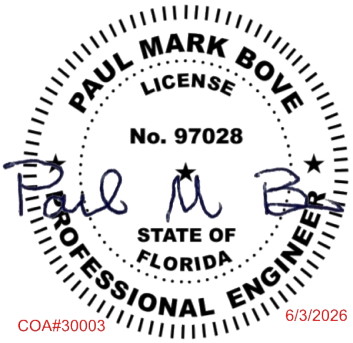

COA#30003 6/3/2026

NOTICE A copy of this design shall be furnished to the erection contractor. The design of this individual truss is based on design criteria and requirements supplied by the Truss Manufacturer and relies upon the accuracy and completeness of the information set forth by the Building Designer. A seal on this drawing indicates acceptance of professional engineering responsibility solely for the truss component design shown. See the cover page and the "Important Information & General Notes" page for additional information. All connector plates shall be manufactured by Simpson Strong-Tie Company, Inc in accordance with ESR-2762. All connector plates are 20 gauge, unless the specified plate size is followed by a "-18" which indicates an 18 gauge plate, or "S# 18", which indicates a high tension 18 gauge plate.

SIMPSON Strong-Tie

Component Solutions
Truss Studio V
2026.3.0.65
Helpdesk: 1-866-252-8606
CSHelp@strongtie.com

EngDrwg: 2026.3.1.0_PM

Project: P-1038 - Martinez		Truss ID: T05	
Truss Mfr Customer: Turnsole Builders	19 Lumber Inc	Plies: 1	SID: 0004280723
Truss Mfr Contact: Monica Register		Spacing: 2-00-00 o.c.	TID: 318742
Project Location: Project location has not been provided		Quantity: 1	Date: 06 / 03 / 26
Project Note(s):		Weight: 127.8 lb	Page: 1 of 1

TC Plate offsets (X,Y): None

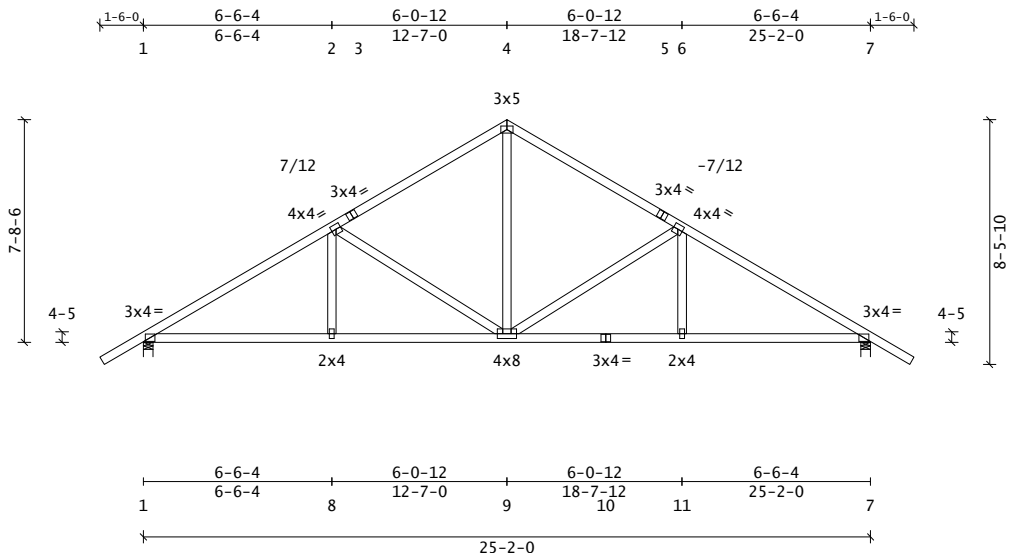

BC Plate offsets (X,Y): None

FBC-2023 | ASCE7-22 | TPI 1-2014

PSF	Live	Dead	Load Duration Factors		
TC	20.0	10.0	Live	Snow	Wind
BC	0.0	10.0	Lbr 1.25	N/A	1.60
Total		40.0	Plt 1.25	N/A	1.60
OH Soffit		2.0			

Spacing: 2-00-00 o.c. Plies: 1
Repetitive Member Increase: Yes
Green Lbr: No | Temp: T ≤ 100˚
Treated Lbr: No | Incised Lbr: No
Seasoned Lbr: Yes | Wet Service: No

Roof Snow Load (Pf) = N/A

Wind Speed (Vult) = 140 mph

Risk Category: II (I = 1.00)
Exposure Category: C
Bldg Dims: L = 61.0 ft B = 59.7 ft
MRH(h)= 18.0ft Kzt = 1.00 Ke = 1.00
Bldg Type: Enclosed
Wind DL (psf): TC = 5.0 BC = 5.0
End Vertical Exposed: L = Yes R = Yes
C&C Location: End Zone | a = 5-11-10
Design: MWFRS/C&C | Reactions: MWFRS
Net Uplift: 0.0 psf

Additional Live Load Checks

10 psf Non-Concurrent BCLL:	Yes
20 psf BCLL Limited Storage:	Yes
200 lb Moving BCLL Access:	No
300 lb Moving TCLL Maintenance:	No
300 lb TCLL/BCLL Person Loading:	No
2000 lb Moving TCLL Office:	No
Partial Length TCLL:	Yes

Plate Tolerance Checks

Fabrication: 20% (Cq = 0.80), u.n.o.
Rotation: +/- 10 degrees, u.n.o.

Material Summary

TC	2x4	SYP	#2
BC	2x4	SYP	#2
Webs	2x4	SYP	#2

Member Forces Summary (lb)

Max CSI in TC PANEL	1 - 2	0.52
Max CSI in BC PANEL	1 - 8	0.43
Max CSI in Web	2 - 9	0.45

Mbr	Jnt-Jnt	Tens	Comp	CSI
TC	OH- 1	49	0	0.19
	1- 2	448	1566	0.52
	2- 3	370	1087	0.50
	3- 4	396	1066	0.31
	4- 5	396	1066	0.31
	5- 6	370	1087	0.50
	6- 7	448	1566	0.52
	7-OH	49	0	0.19
BC	1- 8	1278	257	0.43
	7-11	1278	257	0.43
	8- 9	1278	257	0.43
	9-10	1278	257	0.42
	10-11	1278	257	0.43
Web	2- 8	249	0	0.05
	2- 9	243	506	0.45
	4- 9	662	201	0.19
	6- 9	243	506	0.45
	6-11	249	0	0.05

Reaction Summary (lb)

Jnt	XLocation	Model	Maximum	LDF	Minimum	LDF	Brg_Width	Req_Width	Type	Mat	PSI
1	02-00	Pin	1102	1.25	-330	1.60	04-00	01-08	Wall	SPF	531~
7	25-00-00	HRoll	1102	1.25	-330	1.60	04-00	01-08	Wall	SPF	531~
Horizontal @ Jnt 1:			242	1.60	-242	1.60					

~ Includes adjustment for Bearing Area Factor, Cb.

Loads Summary

- User-defined unbalanced Top Chord Live Loads (TCLL) occurring at 12-07-00 are based on 1.00 full and 0.00 reduced load factors.
- See Loadcase Report for load combinations and additional details.

Design Notes

- Plates designed for Cq at 0.80 and Rotational Tolerance of 10.0 degrees.
- Plates located at TC pitch breaks meet the prescriptive minimum size requirement to transfer unblocked diaphragm loads across those joints.

Deflection Summary

Creep (Kcr) = 2.00

TrussSpan	Limit	Actual(in)	Location
Vert LL	L/240	L/999(-0.06)	8- 9
Vert DL	L/120	L/999(-0.07)	8- 9
Vert CR	L/180	L/999(-0.13)	8- 9
Horz LL	0.75in	(0.03)	@Jt 7
Horz CR	1.25in	(0.05)	@Jt 7
Ohng CR	2L/180	2L/999(0.01)	1- 1
Ohng CR	2L/180	2L/999(0.01)	7- 7

Bracing Summary

Top Chord: Structural Wood Sheathing
Bot Chord: Gypsum Board Sheathing
Web(s): None;

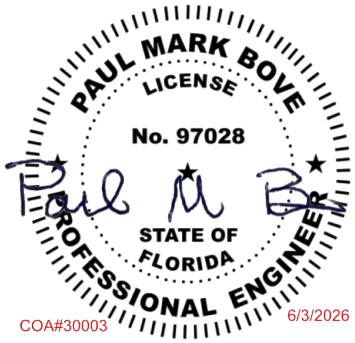

COA#30003 6/3/2026

NOTICE A copy of this design shall be furnished to the erection contractor. The design of this individual truss is based on design criteria and requirements supplied by the Truss Manufacturer and relies upon the accuracy and completeness of the information set forth by the Building Designer. A seal on this drawing indicates acceptance of professional engineering responsibility solely for the truss component design shown. See the cover page and the "Important Information & General Notes" page for additional information. All connector plates shall be manufactured by Simpson Strong-Tie Company, Inc in accordance with ESR-2762. All connector plates are 20 gauge, unless the specified plate size is followed by a "-18" which indicates an 18 gauge plate, or "S# 18", which indicates a high tension 18 gauge plate.

SIMPSON Strong-Tie
Component Solutions
Truss Studio V
2026.3.0.65
Helpdesk: 1-866-252-8606
CSHelp@strongtie.com

EngDrwg: 2026.3.1.0_PM

Project: P-1038 - Martinez		Truss ID: T06		
Truss Mfr Customer: Turnsole Builders	19 Lumber Inc	Plies: 1	SID: 0004280724	
Truss Mfr Contact: Monica Register		Spacing: 2-00-00 o.c.	TID: 318742	
Project Location: Project location has not been provided		Quantity: 1	Date: 06 / 03 / 26	
Project Note(s):		Weight: 115.5 lb	Page: 1 of 1	

TC Plate offsets (X,Y): J5(-0-04,0)

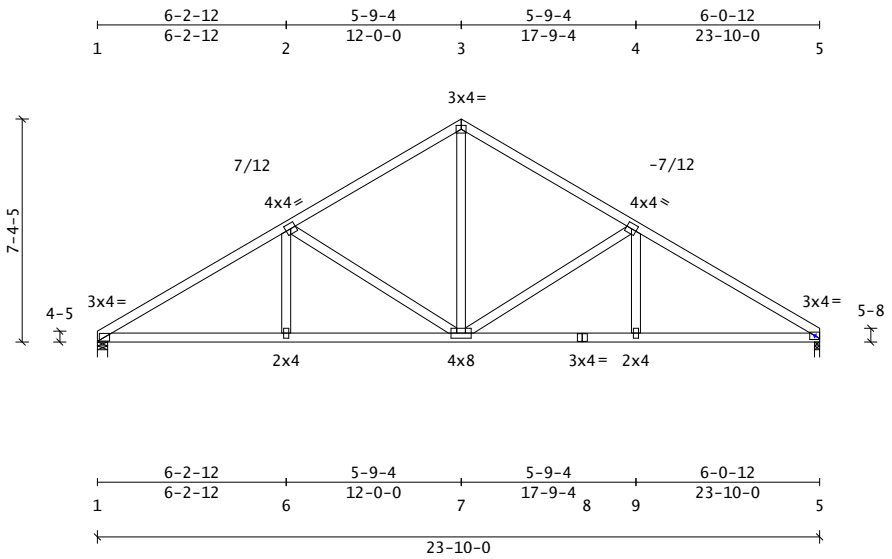

BC Plate offsets (X,Y): None

FBC-2023 | ASCE7-22 | TPI 1-2014

PSF	Live	Dead	Load Duration Factors		
TC	20.0	10.0	Live	Snow	Wind
BC	0.0	10.0	Lbr 1.25	N/A	1.60
Total		40.0	Plt 1.25	N/A	1.60
OH Soffit		2.0			

Spacing: 2-00-00 o.c. Plies: 1
Repetitive Member Increase: Yes
Green Lbr: No | Temp: T ≤ 100˚
Treated Lbr: No | Incised Lbr: No
Seasoned Lbr: Yes | Wet Service: No

Roof Snow Load (Pf) = N/A

Wind Speed (Vult) = 140 mph

Risk Category: II (I = 1.00)
Exposure Category: C
Bldg Dims: L = 61.0 ft B = 59.7 ft
MRH(h)= 18.0ft Kzt = 1.00 Ke = 1.00
Bldg Type: Enclosed
Wind DL (psf): TC = 5.0 BC = 5.0
End Vertical Exposed: L = Yes R = Yes
C&C Location: End Zone | a = 5-11-10
Design: MWFRS/C&C | Reactions: MWFRS
Net Uplift: 0.0 psf

Additional Live Load Checks

10 psf Non-Concurrent BCLL:	Yes
20 psf BCLL Limited Storage:	Yes
200 lb Moving BCLL Access:	No
300 lb Moving TCLL Maintenance:	No
300 lb TCLL/BCLL Person Loading:	No
2000 lb Moving TCLL Office:	No
Partial Length TCLL:	Yes

Plate Tolerance Checks

Fabrication: 20% (Cq = 0.80), u.n.o.
Rotation: +/- 10 degrees, u.n.o.

Material Summary

TC	2x4	SYP	#2
BC	2x4	SYP	#2
Webs	2x4	SYP	#2

Member Forces Summary (lb)

Max CSI in TC PANEL	1 - 2	0.50
Max CSI in BC PANEL	1 - 6	0.41
Max CSI in Web	2 - 7	0.40

Mbr	Jnt-Jnt	Tens	Comp	CSI
TC	1- 2	440	1492	0.50
	2- 3	384	1034	0.48
	3- 4	383	1033	0.47
	4- 5	436	1478	0.49
BC	1- 6	1219	297	0.41
	5- 9	1203	293	0.39
	6- 7	1219	297	0.40
	7- 8	1203	293	0.39
	8- 9	1203	293	0.39
Web	2- 6	240	0	0.05
	2- 7	242	499	0.40
	3- 7	628	198	0.17
	4- 7	237	483	0.39
	4- 9	232	0	0.05

Reaction Summary (lb)

Jnt	XLocation	Model	Maximum	LDF	Minimum	LDF	Brg_Width	Req_Width	Type	Mat	PSI
1	02-00	Pin	956	1.25	-271	1.60	04-00	01-08	Wall	SPF	531~
5	23-09-00	HRoll	949	1.25	-268	1.60	02-00	01-08	Wall	SPF	531~
Horizontal @ Jnt 1:			227	1.60	-225	1.60					

~ Includes adjustment for Bearing Area Factor, Cb.

Loads Summary

- User-defined unbalanced Top Chord Live Loads (TCLL) occurring at 12-00-00 are based on 1.00 full and 0.00 reduced load factors.
- See Loadcase Report for load combinations and additional details.

Design Notes

- Plates designed for Cq at 0.80 and Rotational Tolerance of 10.0 degrees.
- Plates located at TC pitch breaks meet the prescriptive minimum size requirement to transfer unblocked diaphragm loads across those joints.

Deflection Summary

Creep (Kcr) = 2.00

TrussSpan	Limit	Actual(in)	Location
Vert LL	L/240	L/999(-0.05)	7- 9
Vert DL	L/120	L/999(-0.07)	7- 9
Vert CR	L/180	L/999(-0.12)	7- 9
Horz LL	0.75in	(0.02)	@Jt 5
Horz CR	1.25in	(0.05)	@Jt 5

Bracing Summary

Top Chord: Structural Wood Sheathing
Bot Chord: Gypsum Board Sheathing
Web(s): None;

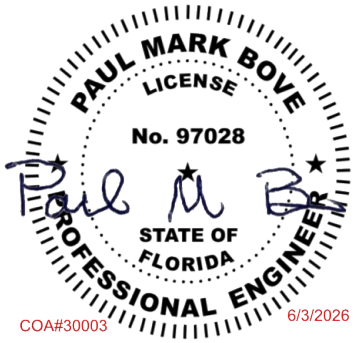

COA#30003 6/3/2026

NOTICE A copy of this design shall be furnished to the erection contractor. The design of this individual truss is based on design criteria and requirements supplied by the Truss Manufacturer and relies upon the accuracy and completeness of the information set forth by the Building Designer. A seal on this drawing indicates acceptance of professional engineering responsibility solely for the truss component design shown. See the cover page and the "Important Information & General Notes" page for additional information. All connector plates shall be manufactured by Simpson Strong-Tie Company, Inc in accordance with ESR-2762. All connector plates are 20 gauge, unless the specified plate size is followed by a "-18" which indicates an 18 gauge plate, or "S# 18", which indicates a high tension 18 gauge plate.

SIMPSON Strong-Tie
Component Solutions
Truss Studio V
2026.3.0.65
Helpdesk: 1-866-252-8606
CSHelp@strongtie.com

EngDrwg: 2026.3.1.0_PM

Project: P-1038 - Martinez		Truss ID: T07	
Truss Mfr Customer: Turnsole Builders	19 Lumber Inc	Plies: 1	SID: 0004280725
Truss Mfr Contact: Monica Register		Spacing: 2-00-00 o.c.	TID: 318742
Project Location: Project location has not been provided		Quantity: 1	Date: 06 / 01 / 26
Project Note(s):		Weight: 49.5 lb	Page: 1 of 1

TC Plate offsets (X,Y): None

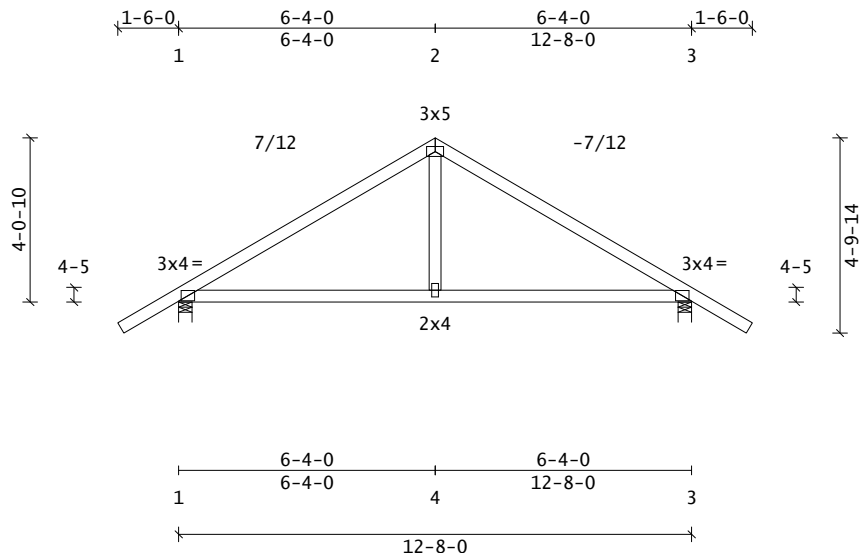

BC Plate offsets (X,Y): None

FBC-2023 | ASCE7-22 | TPI 1-2014

PSF	Live	Dead	Load Duration Factors		
TC	20.0	10.0	Live	Snow	Wind
BC	0.0	10.0	Lbr 1.25	N/A	1.60
Total		40.0	Plt 1.25	N/A	1.60
OH Soffit		2.0			

Spacing: 2-00-00 o.c. Plies: 1
Repetitive Member Increase: Yes
Green Lbr: No | Temp: T ≤ 100˚
Treated Lbr: No | Incised Lbr: No
Seasoned Lbr: Yes | Wet Service: No

Roof Snow Load (Pf) = N/A

Wind Speed (Vult) = 140 mph

Risk Category: II (I = 1.00)
Exposure Category: C
Bldg Dims: L = 61.0 ft B = 59.7 ft
MRH(h)= 18.0ft Kzt = 1.00 Ke = 1.00
Bldg Type: Enclosed
Wind DL (psf): TC = 5.0 BC = 5.0
End Vertical Exposed: L = Yes R = Yes
C&C Location: End Zone | a = 5-11-10
Design: MWFRS/C&C | Reactions: MWFRS
Net Uplift: 0.0 psf

Additional Live Load Checks

10 psf Non-Concurrent BCLL:	Yes
20 psf BCLL Limited Storage:	Yes
200 lb Moving BCLL Access:	No
300 lb Moving TCLL Maintenance:	No
300 lb TCLL/BCLL Person Loading:	No
2000 lb Moving TCLL Office:	No
Partial Length TCLL:	Yes

Plate Tolerance Checks

Fabrication: 20% (Cq = 0.80), u.n.o.
Rotation: +/- 10 degrees, u.n.o.

Material Summary

TC	2x4	SYP	#2
BC	2x4	SYP	#2
Webs	2x4	SYP	#2

Member Forces Summary (lb)

Max CSI in TC PANEL	1 - 2	0.43
Max CSI in BC PANEL	1 - 4	0.37
Max CSI in Web	4 - 2	0.06

Mbr	Jnt-Jnt	Tens	Comp	CSI
TC	OH- 1	49	0	0.25
	1- 2	172	621	0.43
	2- 3	172	621	0.43
	3-OH	49	0	0.25
BC	1- 4	462	17	0.37
	3- 4	462	17	0.37
Web	2- 4	276	0	0.06

Reaction Summary (lb)

Jnt	XLocation	Model	Maximum LDF		Minimum LDF		Brg_Width	Req_Width	Type	Mat	PSI
1	02-00	Pin	602	1.25	-188	1.60	04-00	01-08	Wall	SPF	531~
3	12-06-00	HRoll	602	1.25	-188	1.60	04-00	01-08	Wall	SPF	531~
Horizontal @ Jnt 1:			118	1.60	-118	1.60					

~ Includes adjustment for Bearing Area Factor, Cb.

Loads Summary

- User-defined unbalanced Top Chord Live Loads (TCLL) occurring at 6-04-00 are based on 1.00 full and 0.00 reduced load factors.
- See Loadcase Report for load combinations and additional details.

Design Notes

- Plates designed for Cq at 0.80 and Rotational Tolerance of 10.0 degrees.
- Plates located at TC pitch breaks meet the prescriptive minimum size requirement to transfer unblocked diaphragm loads across those joints.

Deflection Summary

Creep (Kcr) = 2.00

TrussSpan	Limit	Actual(in)	Location
Vert LL	L/240	L/999(-0.03)	4- 3
Vert DL	L/120	L/999(-0.04)	4- 3
Vert CR	L/180	L/999(-0.07)	4- 3
Horz LL	0.75in	(0.01)	@Jt 1
Horz CR	1.25in	(0.01)	@Jt 1
Ohng CR	2L/180	2L/999(0.02)	1- 1
Ohng CR	2L/180	2L/999(0.02)	3- 3

Bracing Summary

Top Chord: Structural Wood Sheathing
Bot Chord: Gypsum Board Sheathing
Web(s): None;

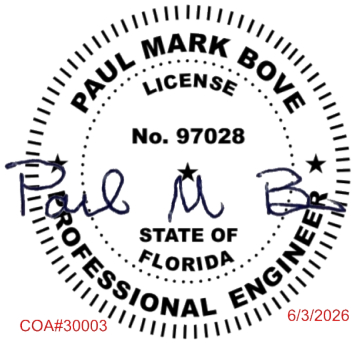

COA#30003 6/3/2026

NOTICE A copy of this design shall be furnished to the erection contractor. The design of this individual truss is based on design criteria and requirements supplied by the Truss Manufacturer and relies upon the accuracy and completeness of the information set forth by the Building Designer. A seal on this drawing indicates acceptance of professional engineering responsibility solely for the truss component design shown. See the cover page and the "Important Information & General Notes" page for additional information. All connector plates shall be manufactured by Simpson Strong-Tie Company, Inc in accordance with ESR-2762. All connector plates are 20 gauge, unless the specified plate size is followed by a "-18" which indicates an 18 gauge plate, or "S# 18", which indicates a high tension 18 gauge plate.

SIMPSON Strong-Tie
Component Solutions
Truss Studio V
2026.3.0.65
Helpdesk: 1-866-252-8606
CSHelp@strongtie.com

EngDrwg: 2026.3.1.0_PM

Project: P-1038 - Martinez		Truss ID: T08	
Truss Mfr Customer: Turnsole Builders	19 Lumber Inc	Plies: 1	SID: 0004280726
Truss Mfr Contact: Monica Register		Spacing: 2-00-00 o.c.	TID: 318742
Project Location: Project location has not been provided		Quantity: 1	Date: 06 / 03 / 26
Project Note(s):		Weight: 44.7 lb	Page: 1 of 1

TC Plate offsets (X,Y): J1(0-04,0)

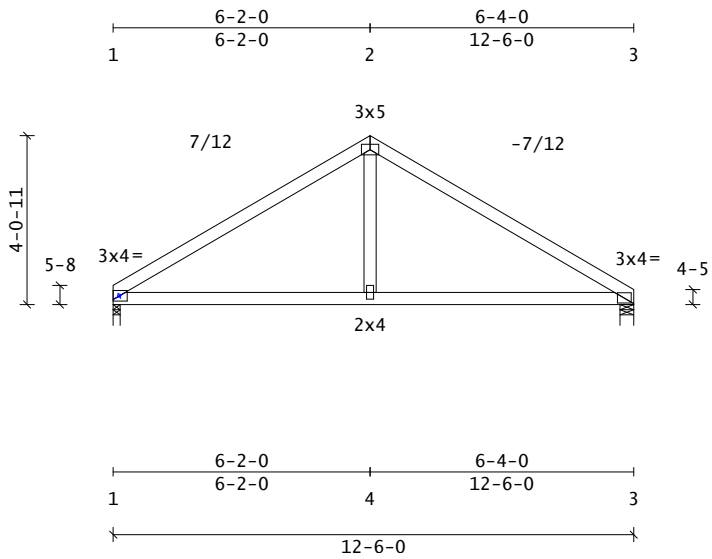

BC Plate offsets (X,Y): None

FBC-2023 | ASCE7-22 | TPI 1-2014

PSF	Live	Dead	Load Duration Factors		
TC	20.0	10.0	Live	Snow	Wind
BC	0.0	10.0	Lbr 1.25	N/A	1.60
Total		40.0	Plt 1.25	N/A	1.60
OH Soffit		2.0			

Spacing: 2-00-00 o.c. Plies: 1
Repetitive Member Increase: Yes
Green Lbr: No | Temp: T ≤ 100˚
Treated Lbr: No | Incised Lbr: No
Seasoned Lbr: Yes | Wet Service: No

Roof Snow Load (Pf) = N/A

Wind Speed (Vult) = 140 mph

Risk Category: II (I = 1.00)
Exposure Category: C
Bldg Dims: L = 61.0 ft B = 59.7 ft
MRH(h)= 18.0ft Kzt = 1.00 Ke = 1.00
Bldg Type: Enclosed
Wind DL (psf): TC = 5.0 BC = 5.0
End Vertical Exposed: L = Yes R = Yes
C&C Location: End Zone | a = 5-11-10
Design: MWFRS/C&C | Reactions: MWFRS
Net Uplift: 0.0 psf

Additional Live Load Checks

10 psf Non-Concurrent BCLL:	Yes
20 psf BCLL Limited Storage:	Yes
200 lb Moving BCLL Access:	No
300 lb Moving TCLL Maintenance:	No
300 lb TCLL/BCLL Person Loading:	No
2000 lb Moving TCLL Office:	No
Partial Length TCLL:	Yes

Plate Tolerance Checks

Fabrication: 20% (Cq = 0.80), u.n.o.
Rotation: +/- 10 degrees, u.n.o.

Material Summary

TC	2x4	SYP	#2
BC	2x4	SYP	#2
Webs	2x4	SYP	#2

Member Forces Summary (lb)

Max CSI in TC PANEL	2 - 3	0.58
Max CSI in BC PANEL	1 - 4	0.38
Max CSI in Web	4 - 2	0.06

Mbr	Jnt-Jnt	Tens	Comp	CSI
TC	1- 2	189	627	0.53
	2- 3	189	625	0.58
BC	1- 4	466	72	0.38
	3- 4	466	72	0.38
Web	2- 4	281	0	0.06

Reaction Summary (lb)

Jnt	XLocation	Model	Maximum	LDF	Minimum	LDF	Brg_Width	Req_Width	Type	Mat	PSI
1	01-00	Pin	496	1.25	-140	1.60	02-00	01-08	Wall	SPF	531~
3	12-04-00	HRoll	503	1.25	-143	1.60	04-00	01-08	Wall	SPF	531~
Horizontal @ Jnt 1:			113	1.60	-115	1.60					

~ Includes adjustment for Bearing Area Factor, Cb.

Loads Summary

· User-defined unbalanced Top Chord Live Loads (TCLL) occurring at 6-02-00 are based on 1.00 full and 0.00 reduced load factors.
· See Loadcase Report for load combinations and additional details.

Design Notes

· Plates designed for Cq at 0.80 and Rotational Tolerance of 10.0 degrees.
· Plates located at TC pitch breaks meet the prescriptive minimum size requirement to transfer unblocked diaphragm loads across those joints.

Deflection Summary

Creep (Kcr) = 2.00

TrussSpan	Limit	Actual(in)	Location
Vert LL	L/240	L/999(-0.04)	4- 3
Vert DL	L/120	L/999(-0.04)	4- 3
Vert CR	L/180	L/999(-0.08)	4- 3
Horz LL	0.75in	(0.01)	@Jt 1
Horz CR	1.25in	(0.02)	@Jt 1

Bracing Summary

Top Chord: Structural Wood Sheathing
Bot Chord: Gypsum Board Sheathing
Web(s): None;

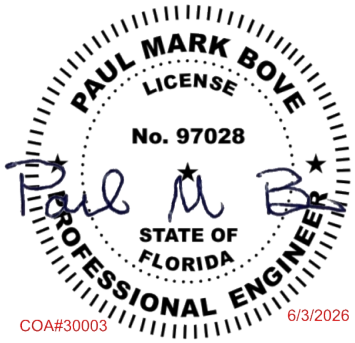

COA#30003 6/3/2026

NOTICE A copy of this design shall be furnished to the erection contractor. The design of this individual truss is based on design criteria and requirements supplied by the Truss Manufacturer and relies upon the accuracy and completeness of the information set forth by the Building Designer. A seal on this drawing indicates acceptance of professional engineering responsibility solely for the truss component design shown. See the cover page and the "Important Information & General Notes" page for additional information. All connector plates shall be manufactured by Simpson Strong-Tie Company, Inc in accordance with ESR-2762. All connector plates are 20 gauge, unless the specified plate size is followed by a "-18" which indicates an 18 gauge plate, or "S# 18", which indicates a high tension 18 gauge plate.

SIMPSON Strong-Tie
Component Solutions
Truss Studio V
2026.3.0.65
Helpdesk: 1-866-252-8606
CSHelp@strongtie.com

EngDrwg: 2026.3.1.0_PM

Project: P-1038 - Martinez		Truss ID: T09	
Truss Mfr Customer: Turnsole Builders	19 Lumber Inc	Plies: 1	SID: 0004280727
Truss Mfr Contact: Monica Register		Spacing: 2-00-00 o.c.	TID: 318742
Project Location: Project location has not been provided		Quantity: 1	Date: 06 / 03 / 26
Project Note(s):		Weight: 263.4 lb	Page: 1 of 1

TC Plate offsets (X,Y): J5(-1-12,-0-03), J7(0-07,-1-06), J8(0-04,0-07), J10(-0-04,0)

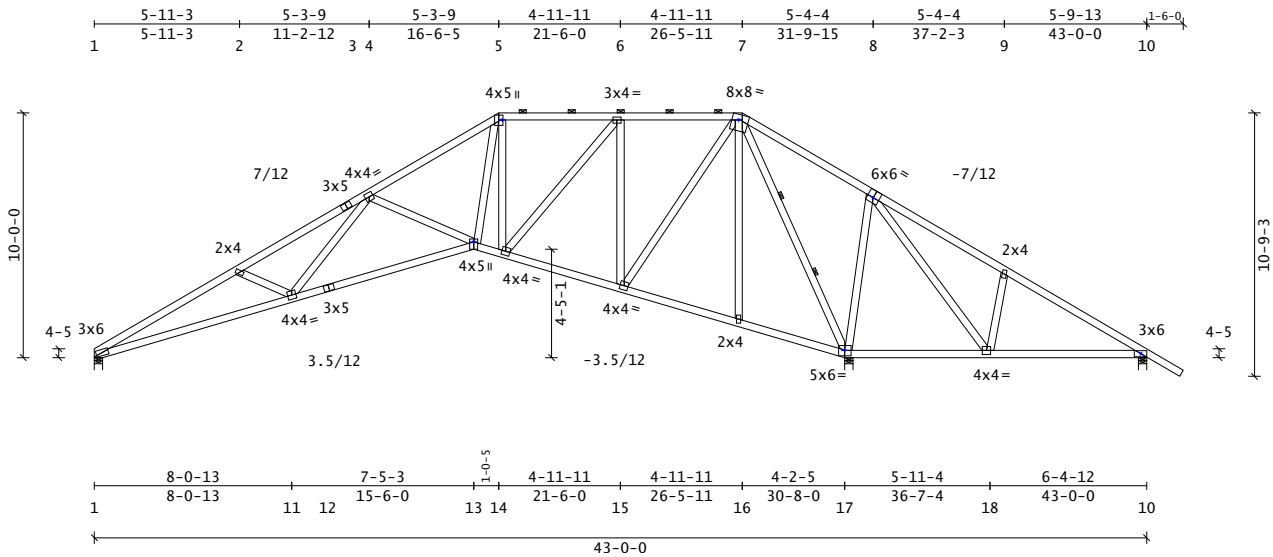

BC Plate offsets (X,Y): J13(0,-1-02), J17(0,-0-02)

FBC-2023 | ASCE7-22 | TPI 1-2014

PSF	Live	Dead	Load Duration Factors		
TC	20.0	10.0	Live	Snow	Wind
BC	0.0	10.0	Lbr 1.25	N/A	1.60
Total		40.0	Plt 1.25	N/A	1.60
OH Soffit		2.0			

Spacing: 2-00-00 o.c. Plies: 1
Repetitive Member Increase: Yes
Green Lbr: No | Temp: T ≤ 100˚
Treated Lbr: No | Incised Lbr: No
Seasoned Lbr: Yes | Wet Service: No

Roof Snow Load (Pf) = N/A

Wind Speed (Vult) = 140 mph

Risk Category: II (I = 1.00)
Exposure Category: C
Bldg Dims: L = 61.0 ft B = 59.7 ft
MRH(h)= 18.0ft Kzt = 1.00 Ke = 1.00
Bldg Type: Enclosed
Wind DL (psf): TC = 5.0 BC = 5.0
End Vertical Exposed: L = Yes R = Yes
C&C Location: End Zone | a = 5-11-10
Design: MWFRS/C&C | Reactions: MWFRS
Net Uplift: 0.0 psf

Additional Live Load Checks

10 psf Non-Concurrent BCLL:	Yes
20 psf BCLL Limited Storage:	Yes
200 lb Moving BCLL Access:	No
300 lb Moving TCLL Maintenance:	No
300 lb TCLL/BCLL Person Loading:	No
2000 lb Moving TCLL Office:	No
Partial Length TCLL:	Yes

Plate Tolerance Checks

Fabrication: 20% (Cq = 0.80), u.n.o.
Rotation: +/- 10 degrees, u.n.o.

Material Summary

TC	2x4	SYP	#2
BC	2x4	SYP	#2
Webs	2x4	SYP	#2

Member Forces Summary (lb)

Max CSI in TC PANEL	7 - 8	0.81
Max CSI in BC PANEL	1 - 11	0.76
Max CSI in Web	7 - 17	0.82

Mbr	Jnt-Jnt	Tens	Comp	CSI
TC	1- 2	778	2728	0.46
	2- 3	659	2407	0.40
	3- 4	664	2270	0.49
	4- 5	359	1372	0.42
	5- 6	336	888	0.33
	6- 7	260	333	0.56
	7- 8	1433	182	0.81
	8- 9	1090	314	0.74
	9-10	1068	318	0.60
	10-OH	49	0	0.19
BC	1-11	2392	578	0.76
	10-18	280	890	0.33
	11-12	1756	362	0.69
	12-13	1788	358	0.61
	13-14	943	101	0.31
	14-15	362	0	0.19
	15-16	321	375	0.15
	16-17	318	371	0.14
	17-18	386	1088	0.32
Web	2-11	253	297	0.05
	4-11	604	134	0.13
	4-13	359	649	0.28
	5-13	1116	172	0.25
	5-14	189	751	0.41
	6-14	867	184	0.19
	6-15	270	921	0.80
	7-15	1029	222	0.28
	7-16	195	0	0.04
	7-17	350	2123	0.82
	8-17	347	609	0.47
	8-18	570	208	0.24
	9-18	237	327	0.07

Reaction Summary (lb)

Jnt	XLocation	Model	Maximum	LDF	Minimum	LDF	Brg_Width	Req_Width	Type	Mat	PSI
1	02-00	Pin	970	1.25	-288	1.60	04-00	01-08	Wall	SPF	531~
17	30-09-12	HRoll	2694	1.25	-699	1.60	04-00	03-06	Wall	SPF	531~
10	42-10-00	HRoll	> 208	1.60	-398	1.25	04-00	01-08	Wall	SPF	531~
Horizontal @ Jnt 1:			306	1.60	-344	1.60					

> Critical @ Jnt 10: 176 1.25
~ Includes adjustment for Bearing Area Factor, Cb.

Loads Summary

- User-defined unbalanced Top Chord Live Loads (TCLL) occurring at 21-06-00 are based on 1.00 full and 0.00 reduced load factors.
- See Loadcase Report for load combinations and additional details.

Design Notes

- Plates designed for Cq at 0.80 and Rotational Tolerance of 10.0 degrees.
- Plates located at TC pitch breaks meet the prescriptive minimum size requirement to transfer unblocked diaphragm loads across those joints.

Installation Notes

- Continuous Lateral Restraint (CLR) rows require diagonal bracing per D-WEBCLRBRACE. Alternatively, see D-WEBREINFORCE.

Deflection Summary

Creep (Kcr) = 2.00

TrussSpan	Limit	Actual(in)	Location
Vert LL	L/240	L/999(-0.21)	11-13
Vert DL	L/120	L/999(-0.27)	11-13
Vert CR	L/180	L/766(-0.48)	11-13
Horz LL	0.75in	(0.14)	@Jt17
Horz CR	1.25in	(0.26)	@Jt17
Ohng CR	2L/180	2L/999(0.01)	10-10

Bracing Summary

Top Chord: Structural Wood Sheathing
Bot Chord: Gypsum Board Sheathing
Purlins:

Mbr	Start	End	Spacing
TC	17-04-05	25-07-11	2-00-00

PAUL MARK BOVE
LICENSE
No. 97028
STATE OF FLORIDA
PROFESSIONAL ENGINEER
COA#30003
6/3/2026

NOTICE A copy of this design shall be furnished to the erection contractor. The design of this individual truss is based on design criteria and requirements supplied by the Truss Manufacturer and relies upon the accuracy and completeness of the information set forth by the Building Designer. A seal on this drawing indicates acceptance of professional engineering responsibility solely for the truss component design shown. See the cover page and the "Important Information & General Notes" page for additional information. All connector plates shall be manufactured by Simpson Strong-Tie Company, Inc in accordance with ESR-2762. All connector plates are 20 gauge, unless the specified plate size is followed by a "-18" which indicates an 18 gauge plate, or "S# 18", which indicates a high tension 18 gauge plate.

SIMPSON Strong-Tie
Component Solutions
Truss Studio V
2026.3.0.65
Helpdesk: 1-866-252-8606
CSHelp@strongtie.com

EngDrwg: 2026.3.1.0_PM

Project: P-1038 - Martinez		Truss ID: T10		
Truss Mfr Customer: Turnsole Builders	19 Lumber Inc	Plies: 1	SID: 0004280728	
Truss Mfr Contact: Monica Register		Spacing: 2-00-00 o.c.	TID: 318742	
Project Location: Project location has not been provided		Quantity: 5	Date: 06 / 03 / 26	
Project Note(s):		Weight: 150.1 lb	Page: 1 of 1	

TC Plate offsets (X,Y): J3(-0-02,0-03), J4(0,1-02), J8(0,1-01), J9(0-02,0-03)

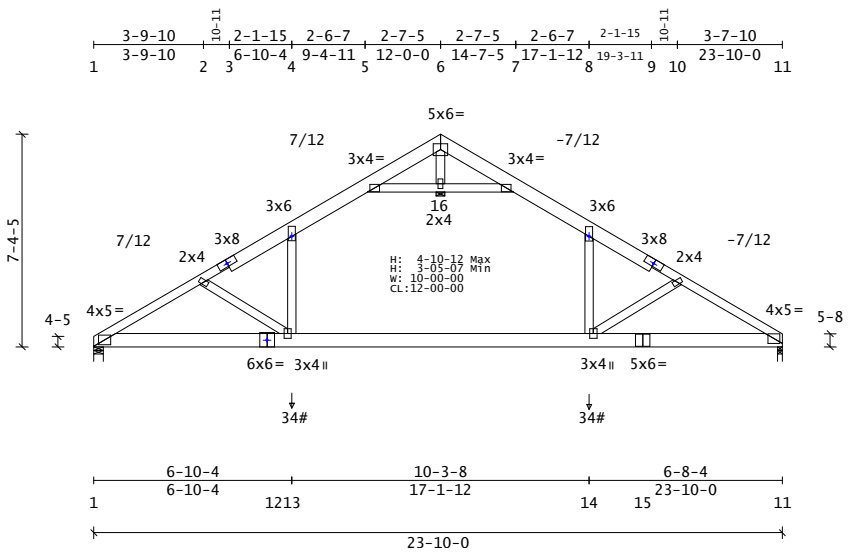

BC Plate offsets (X,Y): J12(0,0-04)

FBC-2023 | ASCE7-22 | TPI 1-2014

PSF	Live	Dead	Load Duration Factors		
TC	20.0	10.0	Live	Snow	Wind
BC	0.0	10.0	Lbr 1.25	N/A	1.60
Total		40.0	Plt 1.25	N/A	1.60
OH Soffit		2.0			

Spacing: 2-00-00 o.c. Plies: 1
Repetitive Member Increase: Yes
Green Lbr: No | Temp: T ≤ 100˚
Treated Lbr: No | Incised Lbr: No
Seasoned Lbr: Yes | Wet Service: No

Roof Snow Load (Pf) = N/A

Wind Speed (Vult) = 140 mph

Risk Category: II (I = 1.00)
Exposure Category: C
Bldg Dims: L = 61.0 ft B = 59.7 ft
MRH(h)= 18.0ft Kzt = 1.00 Ke = 1.00
Bldg Type: Enclosed
Wind DL (psf): TC = 5.0 BC = 5.0
End Vertical Exposed: L = Yes R = Yes
C&C Location: End Zone | a = 5-11-10
Design: MWFRS/C&C | Reactions: MWFRS
Net Uplift: 0.0 psf

Additional Live Load Checks

10 psf Non-Concurrent BCLL:	Yes
20 psf BCLL Limited Storage:	Yes
200 lb Moving BCLL Access:	No
300 lb Moving TCLL Maintenance:	No
300 lb TCLL/BCLL Person Loading:	No
2000 lb Moving TCLL Office:	No
Partial Length TCLL:	Yes

Plate Tolerance Checks

Fabrication: 20% (Cq = 0.80), u.n.o.
Rotation: +/- 10 degrees, u.n.o.

Material Summary

TC	2x4	SYP	#2	
	2x6	SYP	DSS	3-6 6-9
BC	2x6	SYP	DSS	
	2x6	SYP	#2	15-11
Webs	2x4	SYP	#2	
TB	2x4	SYP	#2	

Member Forces Summary (lb)

Max CSI in TC PANEL	1 - 2	0.64
Max CSI in BC PANEL	15 - 11	0.73
Max CSI in Web	5 - 16	0.30

Mbr	Jnt-Jnt	Tens	Comp	CSI
TC	1- 2	243	2173	0.64
	2- 3	175	1955	0.63
	3- 4	181	1944	0.45
	4- 5	249	1406	0.44
	5- 6	495	0	0.47
	6- 7	491	0	0.49
	7- 8	250	1411	0.46
	8- 9	180	1933	0.43
	9-10	175	1944	0.58
	10-11	242	2144	0.61
BC	1-12	1894	164	0.33
	11-15	1859	162	0.73
	12-13	1894	164	0.39
	13-14	1541	28	0.71
	14-15	1859	162	0.38
Web	2-13	161	527	0.13
	4-13	1025	0	0.29
	5-16	242	2131	0.30
	6-16	59	0	0.01
	7-16	242	2131	0.30
	8-14	993	0	0.28
	10-14	159	483	0.12

Reaction Summary (lb)

Jnt	XLocation	Model	Maximum	LDF	Minimum	LDF	Brg_Width	Req_Width	Type	Mat	PSI
1	02-00	Pin	> 1332	1.25	-160	1.60	04-00	01-11	Wall	SPF	531~
11	23-09-00	HRoll	> 1330	1.25	-156	1.60	02-00	01-11	Wall	SPF	531~

Horizontal @ Jnt 1: 219 1.60 -219 1.60
> Critical @ Jnt 1: 1076 1.00
> Critical @ Jnt 11: 1077 1.00
~ Includes adjustment for Bearing Area Factor, Cb.

Loads Summary

· User-defined unbalanced Top Chord Live Loads (TCLL) occurring at 12-00-00 are based on 1.00 full and 0.00 reduced load factors.
· Attic space centered at 12-00-00 is loaded with 40.0 psf Live & 10.0 psf Dead Floor, 5.0 psf Dead Wall, 5.0 psf Dead Ceiling loads, and meets deflection criteria L/360.

· See Loadcase Report for load combinations and additional details.
Concentrated Loads (lbs) based on Max and Min:

Mbr	Location	Max	Min	Dir	DL/TL	Angle	Connection	Description
Web	6-10-04	34	17	V	1.00	90°	None	SidewallDL
Web	17-01-12	34	17	V	1.00	90°	None	SidewallDL

Design Notes

· Plates designed for Cq at 0.80 and Rotational Tolerance of 10.0 degrees.
· Plates located at TC pitch breaks meet the prescriptive minimum size requirement to transfer unblocked diaphragm loads across those joints.

Deflection Summary

Creep (Kcr) = 2.00

TrussSpan	Limit	Actual(in)	Location
Vert LL	L/240	L/595(-0.48)	13-14
Vert DL	L/120	L/841(-0.34)	13-14
Vert CR	L/180	L/348(-0.81)	13-14
Horz LL	0.75in	(0.02)	@Jt11
Horz CR	1.25in	(0.04)	@Jt11

Bracing Summary

Top Chord: Structural Wood Sheathing
Bot Chord: Gypsum Board Sheathing
Attic tie beam (TB) & walls; bracing indicated or rigid sheathing.
Purlins:

Mbr	Start	End	Spacing
TB	9-05-11	14-06-05	2-07-00

Web(s): Continuous Lateral Restraint;

PAUL MARK BOVE
LICENSE
No. 97028
STATE OF FLORIDA
PROFESSIONAL ENGINEER
COA#30003
6/3/2026

NOTICE A copy of this design shall be furnished to the erection contractor. The design of this individual truss is based on design criteria and requirements supplied by the Truss Manufacturer and relies upon the accuracy and completeness of the information set forth by the Building Designer. A seal on this drawing indicates acceptance of professional engineering responsibility solely for the truss component design shown. See the cover page and the "Important Information & General Notes" page for additional information. All connector plates shall be manufactured by Simpson Strong-Tie Company, Inc in accordance with ESR-2762. All connector plates are 20 gauge, unless the specified plate size is followed by a "-18" which indicates an 18 gauge plate, or "S# 18", which indicates a high tension 18 gauge plate.

SIMPSON Strong-Tie
Component Solutions
Truss Studio V
2026.3.0.65
Helpdesk: 1-866-252-8606
CSHelp@strongtie.com

EngDrwg: 2026.3.1.0_PM

Project: P-1038 - Martinez		Truss ID: T18	
Truss Mfr Customer: Turnsole Builders	19 Lumber Inc	Plies: 1	SID: 0004280729
Truss Mfr Contact: Monica Register		Spacing: 2-00-00 o.c.	TID: 318742
Project Location: Project location has not been provided		Quantity: 1	Date: 06 / 03 / 26
Project Note(s):		Weight: 74.0 lb	Page: 1 of 1

TC Plate offsets (X,Y): None

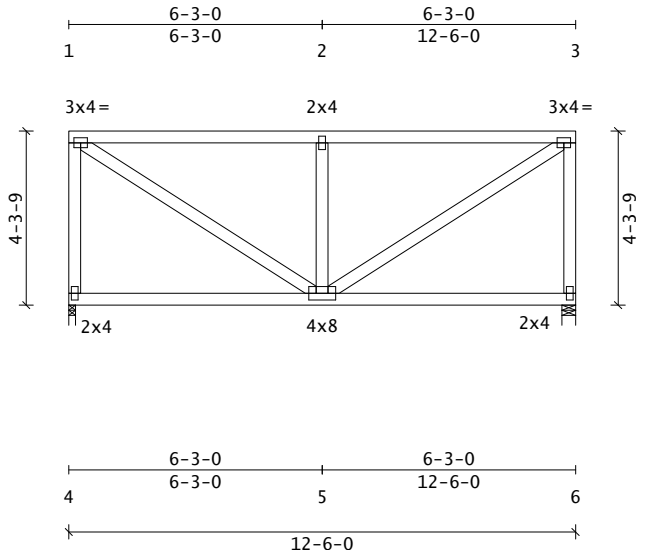

BC Plate offsets (X,Y): None

FBC-2023 | ASCE7-22 | TPI 1-2014

PSF	Live	Dead	Load Duration Factors		
TC	20.0	10.0	Live	Snow	Wind
BC	0.0	10.0	Lbr 1.25	N/A	1.60
Total		40.0	Plt 1.25	N/A	1.60
OH Soffit		2.0			

Spacing: 2-00-00 o.c. Plies: 1
Repetitive Member Increase: Yes
Green Lbr: No | Temp: T ≤ 100˚
Treated Lbr: No | Incised Lbr: No
Seasoned Lbr: Yes | Wet Service: No

Roof Snow Load (Pf) = N/A

Wind Speed (Vult) = 140 mph

Risk Category: II (I = 1.00)
Exposure Category: C
Bldg Dims: L = 61.0 ft B = 59.7 ft
MRH(h)= 18.0ft Kzt = 1.00 Ke = 1.00
Bldg Type: Enclosed
Wind DL (psf): TC = 5.0 BC = 5.0
End Vertical Exposed: L = Yes R = Yes
C&C Location: End Zone | a = 5-11-10
Design: MWFRS/C&C | Reactions: MWFRS
Net Uplift: 0.0 psf

Additional Live Load Checks

10 psf Non-Concurrent BCLL:	Yes
20 psf BCLL Limited Storage:	Yes
200 lb Moving BCLL Access:	No
300 lb Moving TCLL Maintenance:	No
300 lb TCLL/BCLL Person Loading:	No
2000 lb Moving TCLL Office:	No
Partial Length TCLL:	Yes

Plate Tolerance Checks

Fabrication: 20% (Cq = 0.80), u.n.o.
Rotation: +/- 10 degrees, u.n.o.

Material Summary

TC	2x4	SYP	#2
BC	2x4	SYP	#2
Webs	2x4	SYP	#2

Member Forces Summary (lb)

Max CSI in TC PANEL	1 - 2	0.86
Max CSI in BC PANEL	4 - 5	0.35
Max CSI in Web	4 - 1	0.34

Mbr	Jnt-Jnt	Tens	Comp	CSI
TC	OH- 1	0	0	0.00
	1- 2	195	459	0.86
	2- 3	195	459	0.86
	3-OH	0	0	0.00
BC	OH- 4	0	0	0.00
	4- 5	143	134	0.35
	5- 6	143	134	0.35
	6-OH	0	0	0.00
Web	1- 4	165	449	0.34
	1- 5	550	155	0.19
	2- 5	247	454	0.13
	3- 5	550	211	0.19
	3- 6	196	449	0.34

Reaction Summary (lb)

Jnt	XLocation	Model	Maximum	LDF	Minimum	LDF	Brg_Width	Req_Width	Type	Mat	PSI
4	01-12	Pin	499	1.25	-172	1.60	02-00	01-08	Wall	SPF	531~
6	12-04-04	HRoll	500	1.25	-172	1.60	04-00	01-08	Wall	SPF	531~
Horizontal @ Jnt 4:			185	1.60	-185	1.60					
Horizontal @ Jnt 6:			185	1.60	-185	1.60					

~ Includes adjustment for Bearing Area Factor, Cb.

Loads Summary

· User-defined unbalanced Top Chord Live Loads (TCLL) occurring at 6-03-00 are based on 1.00 full and 0.00 reduced load factors.
· See Loadcase Report for load combinations and additional details.

Design Notes

· Plates designed for Cq at 0.80 and Rotational Tolerance of 10.0 degrees.
· Plates located at TC pitch breaks meet the prescriptive minimum size requirement to transfer unblocked diaphragm loads across those joints.
· Lumber and plating have been applied symmetrically.

Installation Notes

· Less than 0.25/12 pitch requires adequate drainage to prevent ponding.

Deflection Summary

Creep (Kcr) = 2.00

TrussSpan	Limit	Actual(in)	Location
Vert LL	L/240	L/999(-0.04)	5- 6
Vert DL	L/120	L/999(-0.04)	5- 6
Vert CR	L/180	L/999(-0.09)	5- 6
Horz LL	0.75in	(0.00)	@Jt 4
Horz CR	1.25in	(0.00)	@Jt 4

Bracing Summary

Top Chord: Structural Wood Sheathing
Bot Chord: Gypsum Board Sheathing
Web(s): None;

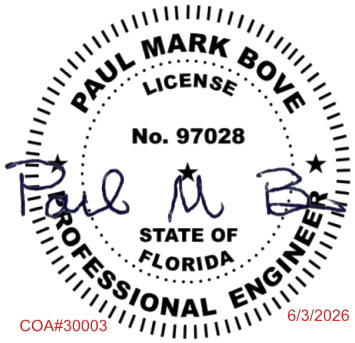

COA#30003 6/3/2026

NOTICE A copy of this design shall be furnished to the erection contractor. The design of this individual truss is based on design criteria and requirements supplied by the Truss Manufacturer and relies upon the accuracy and completeness of the information set forth by the Building Designer. A seal on this drawing indicates acceptance of professional engineering responsibility solely for the truss component design shown. See the cover page and the "Important Information & General Notes" page for additional information. All connector plates shall be manufactured by Simpson Strong-Tie Company, Inc in accordance with ESR-2762. All connector plates are 20 gauge, unless the specified plate size is followed by a "-18" which indicates an 18 gauge plate, or "S# 18", which indicates a high tension 18 gauge plate.

SIMPSON Strong-Tie
Component Solutions
Truss Studio V
2026.3.0.65
Helpdesk: 1-866-252-8606
CSHelp@strongtie.com

EngDrwg: 2026.3.1.0_PM

Project: P-1038 - Martinez		Truss ID: T19	
Truss Mfr Customer: Turnsole Builders	19 Lumber Inc	Plies: 1	SID: 0004280730
Truss Mfr Contact: Monica Register		Spacing: 2-00-00 o.c.	TID: 318742
Project Location: Project location has not been provided		Quantity: 1	Date: 06 / 03 / 26
Project Note(s):		Weight: 90.1 lb	Page: 1 of 1

TC Plate offsets (X,Y): J2(0-08,0-06), J4(-0-08,0-06)

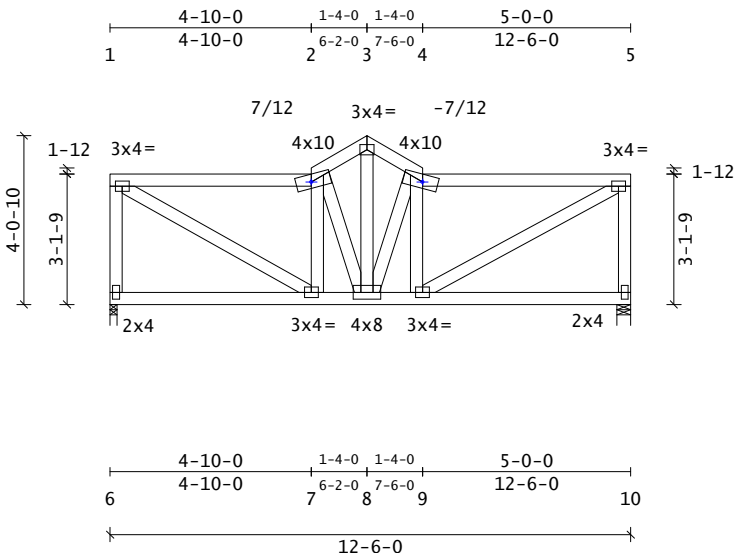

BC Plate offsets (X,Y): None

FBC-2023 | ASCE7-22 | TPI 1-2014

PSF	Live	Dead	Load Duration Factors		
TC	20.0	10.0	Live	Snow	Wind
BC	0.0	10.0	Lbr 1.25	N/A	1.60
Total		40.0	Plt 1.25	N/A	1.60
OH Soffit		2.0			

Spacing: 2-00-00 o.c. Plies: 1
Repetitive Member Increase: Yes
Green Lbr: No | Temp: T ≤ 100˚
Treated Lbr: No | Incised Lbr: No
Seasoned Lbr: Yes | Wet Service: No

Roof Snow Load (Pf) = N/A

Wind Speed (Vult) = 140 mph

Risk Category: II (I = 1.00)
Exposure Category: C
Bldg Dims: L = 61.0 ft B = 59.7 ft
MRH(h)= 18.0ft Kzt = 1.00 Ke = 1.00
Bldg Type: Enclosed
Wind DL (psf): TC = 5.0 BC = 5.0
End Vertical Exposed: L = Yes R = Yes
C&C Location: End Zone | a = 5-11-10
Design: MWFRS/C&C | Reactions: MWFRS
Net Uplift: 0.0 psf

Additional Live Load Checks

10 psf Non-Concurrent BCLL:	Yes
20 psf BCLL Limited Storage:	Yes
200 lb Moving BCLL Access:	No
300 lb Moving TCLL Maintenance:	No
300 lb TCLL/BCLL Person Loading:	No
2000 lb Moving TCLL Office:	No
Partial Length TCLL:	Yes

Plate Tolerance Checks

Fabrication: 20% (Cq = 0.80), u.n.o.
Rotation: +/- 10 degrees, u.n.o.

Material Summary

TC	2x4	SYP	#2
BC	2x4	SYP	#2
Webs	2x4	SYP	#2

Member Forces Summary (lb)

Max CSI in TC PANEL	4 - 5	0.69
Max CSI in BC PANEL	8 - 9	0.25
Max CSI in Web	6 - 1	0.22

Mbr	Jnt-Jnt	Tens	Comp	CSI
TC	OH- 1	0	0	0.00
	1- 2	173	511	0.66
	2- 3	200	503	0.38
	3- 4	201	505	0.39
	4- 5	174	520	0.69
	5-OH	0	0	0.00
BC	OH- 6	0	0	0.00
	6- 7	116	110	0.20
	7- 8	514	162	0.24
	8- 9	522	147	0.25
	9-10	0	28	0.21
	10-OH	0	0	0.00
Web	1- 6	157	455	0.22
	1- 7	593	148	0.13
	2- 7	110	154	0.05
	2- 8	118	357	0.07
	3- 8	549	213	0.12
	4- 8	122	379	0.08
	4- 9	111	144	0.05
	5- 9	598	149	0.13
	5-10	158	454	0.22

Reaction Summary (lb)

Jnt	XLocation	Model	Maximum	LDF	Minimum	LDF	Brg_Width	Req_Width	Type	Mat	PSI
6	01-12	Pin	500	1.25	-137	1.60	02-00	01-08	Wall	SPF	531~
10	12-04-04	HRoll	500	1.25	-137	1.60	04-00	01-08	Wall	SPF	531~
Horizontal @ Jnt 6:			145	1.60	-145	1.60					

~ Includes adjustment for Bearing Area Factor, Cb.

Loads Summary

· User-defined unbalanced Top Chord Live Loads (TCLL) occurring at 6-02-00 are based on 1.00 full and 0.00 reduced load factors.
· See Loadcase Report for load combinations and additional details.

Design Notes

· Plates designed for Cq at 0.80 and Rotational Tolerance of 10.0 degrees.
· Plates located at TC pitch breaks meet the prescriptive minimum size requirement to transfer unblocked diaphragm loads across those joints.

Installation Notes

· Less than 0.25/12 pitch requires adequate drainage to prevent ponding.

Deflection Summary

Creep (Kcr) = 2.00

TrussSpan	Limit	Actual(in)	Location
Vert LL	L/240	L/999(-0.04)	7- 8
Vert DL	L/120	L/999(-0.03)	7- 8
Vert CR	L/180	L/999(-0.07)	7- 8
Horz LL	0.75in	(0.00)	@Jt10
Horz CR	1.25in	(0.00)	@Jt10

Bracing Summary

Top Chord: Structural Wood Sheathing
Bot Chord: Gypsum Board Sheathing
Web(s): None;

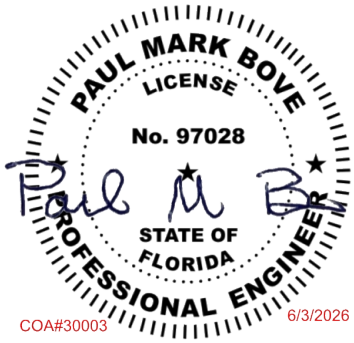

COA#30003 6/3/2026

NOTICE A copy of this design shall be furnished to the erection contractor. The design of this individual truss is based on design criteria and requirements supplied by the Truss Manufacturer and relies upon the accuracy and completeness of the information set forth by the Building Designer. A seal on this drawing indicates acceptance of professional engineering responsibility solely for the truss component design shown. See the cover page and the "Important Information & General Notes" page for additional information. All connector plates shall be manufactured by Simpson Strong-Tie Company, Inc in accordance with ESR-2762. All connector plates are 20 gauge, unless the specified plate size is followed by a "-18" which indicates an 18 gauge plate, or "S# 18", which indicates a high tension 18 gauge plate.

SIMPSON Strong-Tie
Component Solutions
Truss Studio V
2026.3.0.65
Helpdesk: 1-866-252-8606
CSHelp@strongtie.com

EngDrwg: 2026.3.1.0_PM

Project: P-1038 - Martinez		Truss ID: T20	
Truss Mfr Customer: Turnsole Builders	19 Lumber Inc	Plies: 1	SID: 0004280731
Truss Mfr Contact: Monica Register		Spacing: 2-00-00 o.c.	TID: 318742
Project Location: Project location has not been provided		Quantity: 1	Date: 06 / 03 / 26
Project Note(s):		Weight: 78.0 lb	Page: 1 of 1

TC Plate offsets (X,Y): J2(0,0-13), J4(0,0-13)

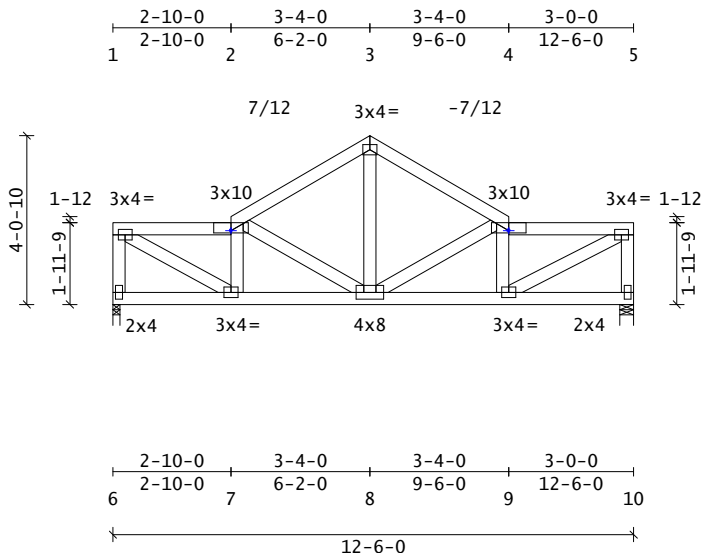

BC Plate offsets (X,Y): None

FBC-2023 | ASCE7-22 | TPI 1-2014

PSF	Live	Dead	Load Duration Factors		
TC	20.0	10.0	Live	Snow	Wind
BC	0.0	10.0	Lbr 1.25	N/A	1.60
Total		40.0	Plt 1.25	N/A	1.60
OH Soffit		2.0			

Spacing: 2-00-00 o.c. Plies: 1
Repetitive Member Increase: Yes
Green Lbr: No | Temp: T ≤ 100˚
Treated Lbr: No | Incised Lbr: No
Seasoned Lbr: Yes | Wet Service: No

Roof Snow Load (Pf) = N/A

Wind Speed (Vult) = 140 mph

Risk Category: II (I = 1.00)
Exposure Category: C
Bldg Dims: L = 61.0 ft B = 59.7 ft
MRH(h)= 18.0ft Kzt = 1.00 Ke = 1.00
Bldg Type: Enclosed
Wind DL (psf): TC = 5.0 BC = 5.0
End Vertical Exposed: L = Yes R = Yes
C&C Location: End Zone | a = 5-11-10
Design: MWFRS/C&C | Reactions: MWFRS
Net Uplift: 0.0 psf

Additional Live Load Checks

10 psf Non-Concurrent BCLL:	Yes
20 psf BCLL Limited Storage:	Yes
200 lb Moving BCLL Access:	No
300 lb Moving TCLL Maintenance:	No
300 lb TCLL/BCLL Person Loading:	No
2000 lb Moving TCLL Office:	No
Partial Length TCLL:	Yes

Plate Tolerance Checks

Fabrication: 20% (Cq = 0.80), u.n.o.
Rotation: +/- 10 degrees, u.n.o.

Material Summary

TC	2x4	SYP	#2
BC	2x4	SYP	#2
Webs	2x4	SYP	#2

Member Forces Summary (lb)

Max CSI in TC PANEL	4 - 5	0.32
Max CSI in BC PANEL	8 - 9	0.18
Max CSI in Web	1 - 7	0.16

Mbr	Jnt-Jnt	Tens	Comp	CSI
TC	OH- 1	0	0	0.00
	1- 2	185	609	0.30
	2- 3	181	524	0.21
	3- 4	182	524	0.22
	4- 5	192	636	0.32
	5-OH	0	0	0.00
BC	OH- 6	0	0	0.00
	6- 7	110	107	0.07
	7- 8	618	141	0.17
	8- 9	645	148	0.18
	9-10	0	15	0.08
	10-OH	0	0	0.00
Web	1- 6	147	469	0.12
	1- 7	708	187	0.16
	2- 7	130	299	0.06
	2- 8	99	247	0.06
	3- 8	313	67	0.07
	4- 8	107	274	0.06
	4- 9	130	292	0.06
	5- 9	728	193	0.16
	5-10	148	468	0.12

Reaction Summary (lb)

Jnt	XLocation	Model	Maximum	LDF	Minimum	LDF	Brg_Width	Req_Width	Type	Mat	PSI
6	01-12	Pin	499	1.25	-137	1.60	02-00	01-08	Wall	SPF	531~
10	12-04-04	HRoll	500	1.25	-137	1.60	04-00	01-08	Wall	SPF	531~
Horizontal @ Jnt 6:			126	1.60	-126	1.60					

~ Includes adjustment for Bearing Area Factor, Cb.

Loads Summary

- User-defined unbalanced Top Chord Live Loads (TCLL) occurring at 6-02-00 are based on 1.00 full and 0.00 reduced load factors.
- See Loadcase Report for load combinations and additional details.

Design Notes

- Plates designed for Cq at 0.80 and Rotational Tolerance of 10.0 degrees.
- Plates located at TC pitch breaks meet the prescriptive minimum size requirement to transfer unblocked diaphragm loads across those joints.

Installation Notes

- Less than 0.25/12 pitch requires adequate drainage to prevent ponding.

Deflection Summary

Creep (Kcr) = 2.00

TrussSpan	Limit	Actual(in)	Location
Vert LL	L/240	L/999(-0.03)	8- 9
Vert DL	L/120	L/999(-0.03)	8- 9
Vert CR	L/180	L/999(-0.06)	8- 9
Horz LL	0.75in	(0.00)	@Jt10
Horz CR	1.25in	(0.01)	@Jt10

Bracing Summary

Top Chord: Structural Wood Sheathing
Bot Chord: Gypsum Board Sheathing
Web(s): None;

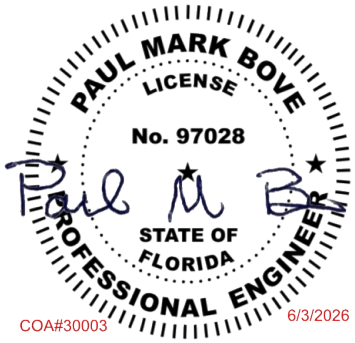

COA#30003 6/3/2026

NOTICE A copy of this design shall be furnished to the erection contractor. The design of this individual truss is based on design criteria and requirements supplied by the Truss Manufacturer and relies upon the accuracy and completeness of the information set forth by the Building Designer. A seal on this drawing indicates acceptance of professional engineering responsibility solely for the truss component design shown. See the cover page and the "Important Information & General Notes" page for additional information. All connector plates shall be manufactured by Simpson Strong-Tie Company, Inc in accordance with ESR-2762. All connector plates are 20 gauge, unless the specified plate size is followed by a "-18" which indicates an 18 gauge plate, or "S# 18", which indicates a high tension 18 gauge plate.

SIMPSON Strong-Tie
Component Solutions
Truss Studio V
2026.3.0.65
Helpdesk: 1-866-252-8606
CSHelp@strongtie.com

EngDrwg: 2026.3.1.0_PM

Project: P-1038 - Martinez		Truss ID: V05	
Truss Mfr Customer: Turnsole Builders	19 Lumber Inc	Plies: 1	SID: 0004280732
Truss Mfr Contact: Monica Register		Spacing: 2-00-00 o.c.	TID: 318742
Project Location: Project location has not been provided		Quantity: 1	Date: 06 / 01 / 26
Project Note(s):		Weight: 48.2 lb	Page: 1 of 1

TC Plate offsets (X,Y): None

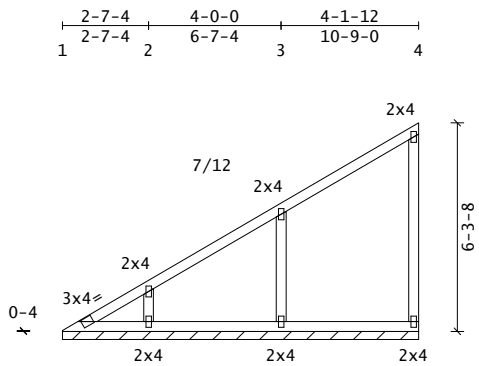

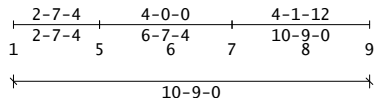

BC Plate offsets (X,Y): None

FBC-2023 | ASCE7-22 | TPI 1-2014

```
PSF  Live  Dead  Load Duration Factors
TC   20.0  10.0      Live  Snow  Wind
BC    0.0   1.0  Lbr 1.25   N/A  1.60
Total      31.0  Plt 1.25   N/A  1.60
OH Soffit   2.0
Spacing:  2-00-00 o.c.   Plies: 1
Repetitive Member Increase: Yes
Green Lbr:  No | Temp: T ≤ 100˚
Treated Lbr:  No | Incised Lbr:  No
Seasoned Lbr: Yes | Wet Service:  No
```

Roof Snow Load (Pf) = N/A

Wind Speed (Vult) = 140 mph

```
Risk Category: II (I = 1.00)
Exposure Category: C
Bldg Dims: L =  61.0 ft  B =  59.7 ft
MRH(h)=  18.0ft Kzt = 1.00 Ke = 1.00
Bldg Type: Enclosed
Wind DL (psf): TC =  5.0 BC =  1.0
End Vertical Exposed: L = Yes R = Yes
C&C Location: End Zone | a = 5-11-10
Design: MWFRS/C&C | Reactions: MWFRS
Net Uplift: 0.0 psf
```

Additional Live Load Checks

```
10 psf Non-Concurrent BCLL:       Yes
20 psf BCLL Limited Storage:      Yes
200 lb Moving BCLL Access:         No
300 lb Moving TCLL Maintenance:    No
300 lb TCLL/BCLL Person Loading:   No
2000 lb Moving TCLL Office:        No
Partial Length TCLL:              Yes
```

Plate Tolerance Checks

```
Fabrication: 20% (Cq = 0.80), u.n.o.
Rotation: +/- 10 degrees, u.n.o.
```

Material Summary

```
TC      2x4   SYP  #2
BC      2x4   SYP  #2
Webs    2x4   SYP  #2
```

Member Forces Summary (lb)

```
Max CSI in TC PANEL   2 -  3   0.34
Max CSI in BC PANEL   1 -  5   0.10
Max CSI in Web        9 -  4   0.60

Mbr Jnt-Jnt   Tens    Comp      CSI
TC    1- 2     258     276     0.20
      2- 3     185     217     0.34
      3- 4     101     123     0.34
      4-OH       0       4     0.00
BC    1- 5     247     223     0.10
      5- 6     247     223     0.09
      6- 7      98      63     0.02
      7- 8      98      63     0.04
      8- 9      98      63     0.04
      9-OH       0       0     0.00
Web   2- 5     149     190     0.06
      3- 7     218     278     0.09
      4- 9      92     102     0.60
```

Reaction Summary (lb, u.n.o.)

```
Jnt XLocation Model Maximum LDF  Minimum LDF  Brg_Width Req_Width Type Mat PSI
  7   6-08-12 Pin      282  1.25   -214  1.60 10-09-00    01-08   Wall SPF 425~
Horizontal @ Jnt  6:   311  1.60   -171  1.60
Jnt  1 - Jnt  9 (plf):  35  1.25     10  1.60
Reactions not shown: < 400       > -150
~ Includes adjustment for Bearing Area Factor, Cb.
```

Loads Summary

- User-defined unbalanced Top Chord Live Loads (TCLL) occurring at 10-10-08 are based on 1.00 full and 0.00 reduced load factors.
- See Loadcase Report for load combinations and additional details.

Design Notes

- Plates designed for Cq at 0.80 and Rotational Tolerance of 10.0 degrees.
- Plates located at TC pitch breaks meet the prescriptive minimum size requirement to transfer unblocked diaphragm loads across those joints.

Installation Notes

- Valley Truss application only.

Deflection Summary

```
Creep (Kcr) = 2.00
TrussSpan Limit  Actual(in)   Location
Vert LL   L/240   L/999(-0.00)  8- 9
Vert DL   L/120   L/999(-0.00)  8- 9
Vert CR   L/180   L/999(-0.00)  8- 9
Horz LL   0.75in       ( 0.00) @Jt 1
Horz CR   1.25in       ( 0.00) @Jt 1
```

Bracing Summary

```
Top Chord: Structural Wood Sheathing
Bot Chord: Gypsum Board Sheathing
Web(s): None;
```

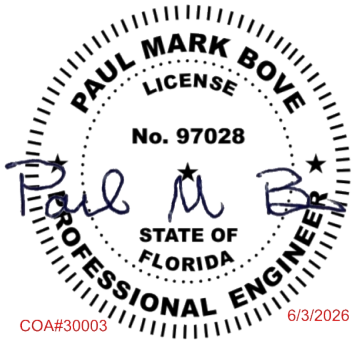

COA#30003 6/3/2026

NOTICE A copy of this design shall be furnished to the erection contractor. The design of this individual truss is based on design criteria and requirements supplied by the Truss Manufacturer and relies upon the accuracy and completeness of the information set forth by the Building Designer. A seal on this drawing indicates acceptance of professional engineering responsibility solely for the truss component design shown. See the cover page and the "Important Information & General Notes" page for additional information. All connector plates shall be manufactured by Simpson Strong-Tie Company, Inc in accordance with ESR-2762. All connector plates are 20 gauge, unless the specified plate size is followed by a "-18" which indicates an 18 gauge plate, or "S# 18", which indicates a high tension 18 gauge plate.

SIMPSON Strong-Tie
Component Solutions
Truss Studio V
2026.3.0.65
Helpdesk: 1-866-252-8606
CSHelp@strongtie.com

EngDrwg: 2026.3.1.0_PM

Project: P-1038 - Martinez		Truss ID: V06			
Truss Mfr Customer: Turnsole Builders	19 Lumber Inc	Plies:	1	SID:	0004280733
Truss Mfr Contact: Monica Register		Spacing:	2-00-00 o.c.	TID:	318742
Project Location: Project location has not been provided		Quantity:	1	Date:	06 / 01 / 26
Project Note(s):		Weight:	36.6 lb	Page:	1 of 1

TC Plate offsets (X,Y): None

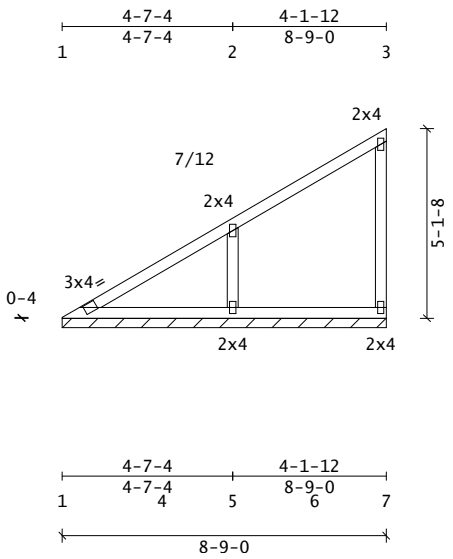

BC Plate offsets (X,Y): None

FBC-2023 | ASCE7-22 | TPI 1-2014

PSF	Live	Dead	Load Duration Factors		
TC	20.0	10.0	Live	Snow	Wind
BC	0.0	1.0	Lbr 1.25	N/A	1.60
Total		31.0	Plt 1.25	N/A	1.60
OH Soffit		2.0			

Spacing: 2-00-00 o.c. Plies: 1
Repetitive Member Increase: Yes
Green Lbr: No | Temp: T ≤ 100˚
Treated Lbr: No | Incised Lbr: No
Seasoned Lbr: Yes | Wet Service: No

Roof Snow Load (Pf) = N/A

Wind Speed (Vult) = 140 mph

Risk Category: II (I = 1.00)
Exposure Category: C
Bldg Dims: L = 61.0 ft B = 59.7 ft
MRH(h)= 18.0ft Kzt = 1.00 Ke = 1.00
Bldg Type: Enclosed
Wind DL (psf): TC = 5.0 BC = 1.0
End Vertical Exposed: L = Yes R = Yes
C&C Location: End Zone | a = 5-11-10
Design: MWFRS/C&C | Reactions: MWFRS
Net Uplift: 0.0 psf

Additional Live Load Checks

10 psf Non-Concurrent BCLL:	Yes
20 psf BCLL Limited Storage:	Yes
200 lb Moving BCLL Access:	No
300 lb Moving TCLL Maintenance:	No
300 lb TCLL/BCLL Person Loading:	No
2000 lb Moving TCLL Office:	No
Partial Length TCLL:	Yes

Plate Tolerance Checks

Fabrication: 20% (Cq = 0.80), u.n.o.
Rotation: +/- 10 degrees, u.n.o.

Material Summary

TC	2x4	SYP	#2
BC	2x4	SYP	#2
Webs	2x4	SYP	#2

Member Forces Summary (lb)

Max CSI in TC PANEL	2 - 3	0.39
Max CSI in BC PANEL	1 - 4	0.21
Max CSI in Web	7 - 3	0.41

Mbr	Jnt-Jnt	Tens	Comp	CSI
TC	1- 2	199	200	0.38
	2- 3	82	107	0.39
	3-OH	0	4	0.00
BC	1- 4	198	194	0.21
	4- 5	198	194	0.12
	5- 6	77	50	0.03
	6- 7	77	50	0.02
	7-OH	0	0	0.00
Web	2- 5	219	279	0.10
	3- 7	84	102	0.41

Reaction Summary (lb, u.n.o.)

Jnt	XLocation	Model	Maximum	LDF	Minimum	LDF	Brg_Width	Req_Width	Type	Mat	PSI
5	4-08-12	Pin	275	1.25	-208	1.60	8-09-00	01-08	Wall	SPF	425~
Horizontal @ Jnt 5:			248	1.60	-136	1.60					
Jnt 1 - Jnt 7 (plf):			30	1.25	6	1.60					

Reactions not shown: < 400 > -150
~ Includes adjustment for Bearing Area Factor, Cb.

Loads Summary

- User-defined unbalanced Top Chord Live Loads (TCLL) occurring at 8-10-08 are based on 1.00 full and 0.00 reduced load factors.
- See Loadcase Report for load combinations and additional details.

Design Notes

- Plates designed for Cq at 0.80 and Rotational Tolerance of 10.0 degrees.
- Plates located at TC pitch breaks meet the prescriptive minimum size requirement to transfer unblocked diaphragm loads across those joints.

Installation Notes

- Valley Truss application only.

Deflection Summary

Creep (Kcr) = 2.00

TrussSpan	Limit	Actual(in)	Location
Vert LL	L/240	L/999(-0.00)	1- 4
Vert DL	L/120	L/999(-0.00)	1- 4
Vert CR	L/180	L/999(-0.00)	1- 4
Horz LL	0.75in	(0.01)	@Jt 1
Horz CR	1.25in	(0.01)	@Jt 1

Bracing Summary

Top Chord: Structural Wood Sheathing
Bot Chord: Gypsum Board Sheathing
Web(s): None;

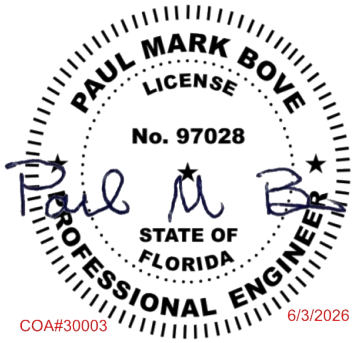

COA#30003 6/3/2026

NOTICE A copy of this design shall be furnished to the erection contractor. The design of this individual truss is based on design criteria and requirements supplied by the Truss Manufacturer and relies upon the accuracy and completeness of the information set forth by the Building Designer. A seal on this drawing indicates acceptance of professional engineering responsibility solely for the truss component design shown. See the cover page and the "Important Information & General Notes" page for additional information. All connector plates shall be manufactured by Simpson Strong-Tie Company, Inc in accordance with ESR-2762. All connector plates are 20 gauge, unless the specified plate size is followed by a "-18" which indicates an 18 gauge plate, or "S# 18", which indicates a high tension 18 gauge plate.

SIMPSON Strong-Tie

Component Solutions
Truss Studio V
2026.3.0.65
Helpdesk: 1-866-252-8606
CSHelp@strongtie.com

Project: P-1038 - Martinez		Truss ID: V07	
Truss Mfr Customer: Turnsole Builders	19 Lumber Inc	Plies: 1	SID: 0004280734
Truss Mfr Contact: Monica Register		Spacing: 2-00-00 o.c.	TID: 318742
Project Location: Project location has not been provided		Quantity: 1	Date: 06 / 01 / 26
Project Note(s):		Weight: 27.6 lb	Page: 1 of 1

TC Plate offsets (X,Y): None

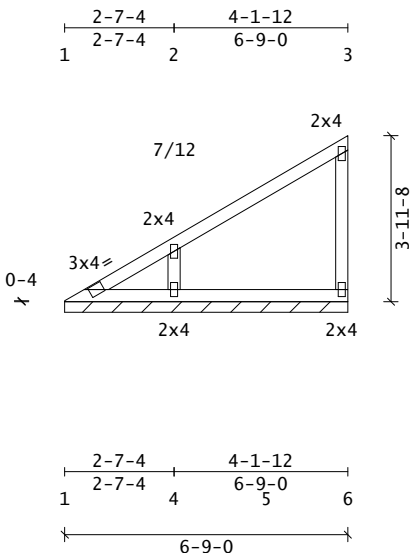

BC Plate offsets (X,Y): None

FBC-2023 | ASCE7-22 | TPI 1-2014

PSF	Live	Dead	Load Duration Factors		
TC	20.0	10.0	Live	Snow	Wind
BC	0.0	1.0	Lbr 1.25	N/A	1.60
Total		31.0	Plt 1.25	N/A	1.60
OH Soffit		2.0			

Spacing: 2-00-00 o.c. Plies: 1
Repetitive Member Increase: Yes
Green Lbr: No | Temp: T ≤ 100˚
Treated Lbr: No | Incised Lbr: No
Seasoned Lbr: Yes | Wet Service: No

Roof Snow Load (Pf) = N/A

Wind Speed (Vult) = 140 mph

Risk Category: II (I = 1.00)
Exposure Category: C
Bldg Dims: L = 61.0 ft B = 59.7 ft
MRH(h)= 18.0ft Kzt = 1.00 Ke = 1.00
Bldg Type: Enclosed
Wind DL (psf): TC = 5.0 BC = 1.0
End Vertical Exposed: L = Yes R = Yes
C&C Location: End Zone | a = 5-11-10
Design: MWFRS/C&C | Reactions: MWFRS
Net Uplift: 0.0 psf

Additional Live Load Checks

10 psf Non-Concurrent BCLL:	Yes
20 psf BCLL Limited Storage:	Yes
200 lb Moving BCLL Access:	No
300 lb Moving TCLL Maintenance:	No
300 lb TCLL/BCLL Person Loading:	No
2000 lb Moving TCLL Office:	No
Partial Length TCLL:	Yes

Plate Tolerance Checks

Fabrication: 20% (Cq = 0.80), u.n.o.
Rotation: +/- 10 degrees, u.n.o.

Material Summary

TC	2x4	SYP	#2
BC	2x4	SYP	#2
Webs	2x4	SYP	#2

Member Forces Summary (lb)

Max CSI in TC PANEL	2 - 3	0.34
Max CSI in BC PANEL	1 - 4	0.08
Max CSI in Web	6 - 3	0.26

Mbr	Jnt-Jnt	Tens	Comp	CSI
TC	1- 2	196	167	0.31
	2- 3	71	93	0.34
	3-OH	0	4	0.00
BC	1- 4	148	160	0.08
	4- 5	57	36	0.01
	5- 6	57	36	0.01
	6-OH	0	0	0.00
Web	2- 4	191	328	0.10
	3- 6	79	144	0.26

Reaction Summary (lb, u.n.o.)

Jnt	XLocation	Model	Maximum	LDF	Minimum	LDF	Brg_Width	Req_Width	Type	Mat	PSI
4	2-08-12	Pin	244	1.25	-185	1.60	6-09-00	01-08	Wall	SPF	425~
Horizontal @ Jnt 4:			186	1.60	-101	1.60					
Jnt 1 - Jnt 6 (plf):			25	1.25	3	1.60					

Reactions not shown: < 400 > -150
~ Includes adjustment for Bearing Area Factor, Cb.

Loads Summary

- User-defined unbalanced Top Chord Live Loads (TCLL) occurring at 6-10-08 are based on 1.00 full and 0.00 reduced load factors.
- See Loadcase Report for load combinations and additional details.

Design Notes

- Plates designed for Cq at 0.80 and Rotational Tolerance of 10.0 degrees.
- Plates located at TC pitch breaks meet the prescriptive minimum size requirement to transfer unblocked diaphragm loads across those joints.

Installation Notes

- Valley Truss application only.

Deflection Summary

Creep (Kcr) = 2.00

TrussSpan	Limit	Actual(in)	Location
Vert LL	L/240	L/999(-0.00)	5- 6
Vert DL	L/120	L/999(-0.00)	5- 6
Vert CR	L/180	L/999(-0.00)	5- 6
Horz LL	0.75in	(0.00)	@Jt 1
Horz CR	1.25in	(0.00)	@Jt 1

Bracing Summary

Top Chord: Structural Wood Sheathing
Bot Chord: Gypsum Board Sheathing
Web(s): None;

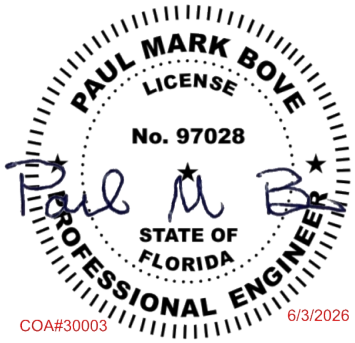

COA#30003 6/3/2026

NOTICE A copy of this design shall be furnished to the erection contractor. The design of this individual truss is based on design criteria and requirements supplied by the Truss Manufacturer and relies upon the accuracy and completeness of the information set forth by the Building Designer. A seal on this drawing indicates acceptance of professional engineering responsibility solely for the truss component design shown. See the cover page and the "Important Information & General Notes" page for additional information. All connector plates shall be manufactured by Simpson Strong-Tie Company, Inc in accordance with ESR-2762. All connector plates are 20 gauge, unless the specified plate size is followed by a "-18" which indicates an 18 gauge plate, or "S# 18", which indicates a high tension 18 gauge plate.

SIMPSON Strong-Tie
Component Solutions
Truss Studio V
2026.3.0.65
Helpdesk: 1-866-252-8606
CSHelp@strongtie.com

EngDrwg: 2026.3.1.0_PM

Project: P-1038 - Martinez		Truss ID: V08		
Truss Mfr Customer: Turnsole Builders	19 Lumber Inc	Plies: 1	SID: 0004280735	
Truss Mfr Contact: Monica Register		Spacing: 2-00-00 o.c.	TID: 318742	
Project Location: Project location has not been provided		Quantity: 1	Date: 06 / 01 / 26	
Project Note(s):		Weight: 17.6 lb	Page: 1 of 1	

TC Plate offsets (X,Y): None

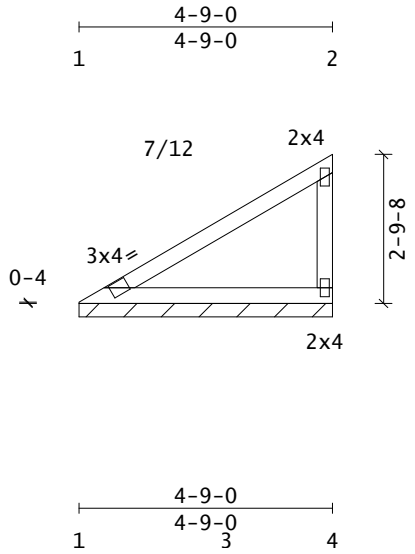

BC Plate offsets (X,Y): None

FBC-2023 | ASCE7-22 | TPI 1-2014

PSF	Live	Dead	Load Duration Factors		
TC	20.0	10.0	Live	Snow	Wind
BC	0.0	1.0	Lbr 1.25	N/A	1.60
Total		31.0	Plt 1.25	N/A	1.60
OH Soffit		2.0			

Spacing: 2-00-00 o.c. Plies: 1
Repetitive Member Increase: Yes
Green Lbr: No | Temp: T ≤ 100˚
Treated Lbr: No | Incised Lbr: No
Seasoned Lbr: Yes | Wet Service: No

Roof Snow Load (Pf) = N/A

Wind Speed (Vult) = 140 mph

Risk Category: II (I = 1.00)
Exposure Category: C
Bldg Dims: L = 61.0 ft B = 59.7 ft
MRH(h)= 18.0ft Kzt = 1.00 Ke = 1.00
Bldg Type: Enclosed
Wind DL (psf): TC = 5.0 BC = 1.0
End Vertical Exposed: L = Yes R = Yes
C&C Location: End Zone | a = 5-11-10
Design: MWFRS/C&C | Reactions: MWFRS
Net Uplift: 0.0 psf

Additional Live Load Checks

10 psf Non-Concurrent BCLL:	Yes
20 psf BCLL Limited Storage:	Yes
200 lb Moving BCLL Access:	No
300 lb Moving TCLL Maintenance:	No
300 lb TCLL/BCLL Person Loading:	No
2000 lb Moving TCLL Office:	No
Partial Length TCLL:	Yes

Plate Tolerance Checks

Fabrication: 20% (Cq = 0.80), u.n.o.
Rotation: +/- 10 degrees, u.n.o.

Material Summary

TC	2x4	SYP	#2
BC	2x4	SYP	#2
Webs	2x4	SYP	#2

Member Forces Summary (lb)

Max CSI in TC PANEL	1 - 2	0.31
Max CSI in BC PANEL	1 - 3	0.30
Max CSI in Web	4 - 2	0.15

Mbr	Jnt-Jnt	Tens	Comp	CSI
TC	1- 2	76	76	0.31
	2-OH	0	4	0.00
BC	1- 3	99	116	0.30
	3- 4	36	23	0.10
	4-OH	0	0	0.00
Web	2- 4	71	154	0.15

Reaction Summary (lb, u.n.o.)

	Maximum	LDF	Minimum	LDF
Horizontal @ Jnt 3:	123	1.60	-65	1.60
Jnt 1 - Jnt 4 (plf):	61	1.25	30	1.60

Reactions not shown: < 400 > -150

Loads Summary

- User-defined unbalanced Top Chord Live Loads (TCLL) occurring at 4-10-08 are based on 1.00 full and 0.00 reduced load factors.
- See Loadcase Report for load combinations and additional details.

Design Notes

- Plates designed for Cq at 0.80 and Rotational Tolerance of 10.0 degrees.
- Plates located at TC pitch breaks meet the prescriptive minimum size requirement to transfer unblocked diaphragm loads across those joints.

Installation Notes

- Valley Truss application only.

Deflection Summary

Creep (Kcr) = 2.00

TrussSpan	Limit	Actual(in)	Location
Vert LL	L/240	L/999(-0.00)	1- 3
Vert DL	L/120	L/999(-0.00)	1- 3
Vert CR	L/180	L/999(-0.01)	1- 3
Horz LL	0.75in	(0.01)	@Jt 1
Horz CR	1.25in	(0.01)	@Jt 1

Bracing Summary

Top Chord: Structural Wood Sheathing
Bot Chord: Gypsum Board Sheathing
Web(s): None;

PAUL MARK BOVE
LICENSE
No. 97028
STATE OF FLORIDA
PROFESSIONAL ENGINEER

COA#30003 6/3/2026

NOTICE A copy of this design shall be furnished to the erection contractor. The design of this individual truss is based on design criteria and requirements supplied by the Truss Manufacturer and relies upon the accuracy and completeness of the information set forth by the Building Designer. A seal on this drawing indicates acceptance of professional engineering responsibility solely for the truss component design shown. See the cover page and the "Important Information & General Notes" page for additional information. All connector plates shall be manufactured by Simpson Strong-Tie Company, Inc in accordance with ESR-2762. All connector plates are 20 gauge, unless the specified plate size is followed by a "-18" which indicates an 18 gauge plate, or "S# 18", which indicates a high tension 18 gauge plate.

SIMPSON Strong-Tie

Component Solutions
Truss Studio V
2026.3.0.65
Helpdesk: 1-866-252-8606
CSHelp@strongtie.com

Project: P-1038 - Martinez		Truss ID: V09	
Truss Mfr Customer: Turnsole Builders	19 Lumber Inc	Plies: 1	SID: 0004280736
Truss Mfr Contact: Monica Register		Spacing: 2-00-00 o.c.	TID: 318742
Project Location: Project location has not been provided		Quantity: 1	Date: 06 / 03 / 26
Project Note(s):		Weight: 10.1 lb	Page: 1 of 1

TC Plate offsets (X,Y): None

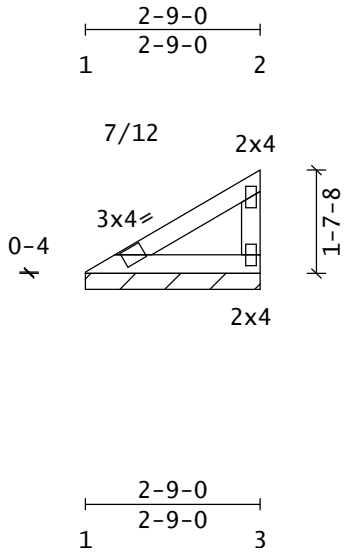

BC Plate offsets (X,Y): None

FBC-2023 | ASCE7-22 | TPI 1-2014

PSF	Live	Dead	Load Duration Factors		
TC	20.0	10.0	Live	Snow	Wind
BC	0.0	1.0	Lbr 1.25	N/A	1.60
Total		31.0	Plt 1.25	N/A	1.60
OH Soffit		2.0			

Spacing: 2-00-00 o.c. Plies: 1
Repetitive Member Increase: Yes
Green Lbr: No | Temp: T ≤ 100˚
Treated Lbr: No | Incised Lbr: No
Seasoned Lbr: Yes | Wet Service: No

Roof Snow Load (Pf) = N/A

Wind Speed (Vult) = 140 mph

Risk Category: II (I = 1.00)
Exposure Category: C
Bldg Dims: L = 61.0 ft B = 59.7 ft
MRH(h)= 18.0ft Kzt = 1.00 Ke = 1.00
Bldg Type: Enclosed
Wind DL (psf): TC = 5.0 BC = 1.0
End Vertical Exposed: L = Yes R = Yes
C&C Location: End Zone | a = 5-11-10
Design: MWFRS/C&C | Reactions: MWFRS
Net Uplift: 0.0 psf

Additional Live Load Checks

10 psf Non-Concurrent BCLL:	Yes
20 psf BCLL Limited Storage:	Yes
200 lb Moving BCLL Access:	No
300 lb Moving TCLL Maintenance:	No
300 lb TCLL/BCLL Person Loading:	No
2000 lb Moving TCLL Office:	No
Partial Length TCLL:	Yes

Plate Tolerance Checks

Fabrication: 20% (Cq = 0.80), u.n.o.
Rotation: +/- 10 degrees, u.n.o.

Material Summary

TC	2x4	SYP	#2
BC	2x4	SYP	#2
Webs	2x4	SYP	#2

Member Forces Summary (lb)

Max CSI in TC PANEL	1 - 2	0.08
Max CSI in BC PANEL	1 - 3	0.07
Max CSI in Web	3 - 2	0.05

Mbr	Jnt-Jnt	Tens	Comp	CSI
TC	1- 2	41	38	0.08
	2-OH	0	4	0.00
BC	1- 3	49	59	0.07
	3-OH	0	0	0.00
Web	2- 3	38	85	0.05

Reaction Summary (lb, u.n.o.)

	Maximum	LDF	Minimum	LDF
Horizontal @ Jnt 3:	60	1.60	-30	1.60
Jnt 1 - Jnt 3 (plf):	61	1.25	31	1.60

Reactions not shown: < 400 > -150

Loads Summary

- User-defined unbalanced Top Chord Live Loads (TCLL) occurring at 2-10-08 are based on 1.00 full and 0.00 reduced load factors.
- See Loadcase Report for load combinations and additional details.

Design Notes

- Plates designed for Cq at 0.80 and Rotational Tolerance of 10.0 degrees.
- Plates located at TC pitch breaks meet the prescriptive minimum size requirement to transfer unblocked diaphragm loads across those joints.

Installation Notes

- Valley Truss application only.

Deflection Summary

Creep (Kcr) = 2.00

TrussSpan	Limit	Actual(in)	Location
Vert LL	L/240	L/999(-0.00)	1- 3
Vert DL	L/120	L/999(-0.00)	1- 3
Vert CR	L/180	L/999(-0.00)	1- 3
Horz LL	0.75in	(0.00)	@Jt 1
Horz CR	1.25in	(0.00)	@Jt 1

Bracing Summary

Top Chord: Structural Wood Sheathing
Bot Chord: Gypsum Board Sheathing
Web(s): None;

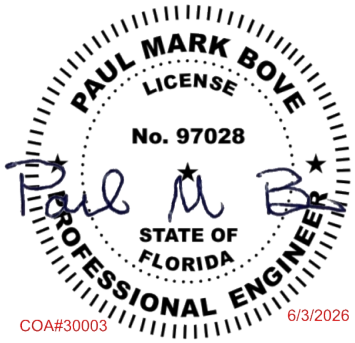

COA#30003 6/3/2026

NOTICE A copy of this design shall be furnished to the erection contractor. The design of this individual truss is based on design criteria and requirements supplied by the Truss Manufacturer and relies upon the accuracy and completeness of the information set forth by the Building Designer. A seal on this drawing indicates acceptance of professional engineering responsibility solely for the truss component design shown. See the cover page and the "Important Information & General Notes" page for additional information. All connector plates shall be manufactured by Simpson Strong-Tie Company, Inc in accordance with ESR-2762. All connector plates are 20 gauge, unless the specified plate size is followed by a "-18" which indicates an 18 gauge plate, or "S# 18", which indicates a high tension 18 gauge plate.

SIMPSON Strong-Tie
Component Solutions
Truss Studio V
2026.3.0.65
Helpdesk: 1-866-252-8606
CSHelp@strongtie.com

EngDrwg: 2026.3.1.0_PM

Project: P-1038 - Martinez		Truss ID: V10		
Truss Mfr Customer: Turnsole Builders	19 Lumber Inc	Plies: 1	SID:	0004280737
Truss Mfr Contact: Monica Register		Spacing: 2-00-00 o.c.	TID:	318742
Project Location: Project location has not been provided		Quantity: 1	Date:	06 / 03 / 26
Project Note(s):		Weight: 164.0 lb	Page:	1 of 1

TC Plate offsets (X,Y): None

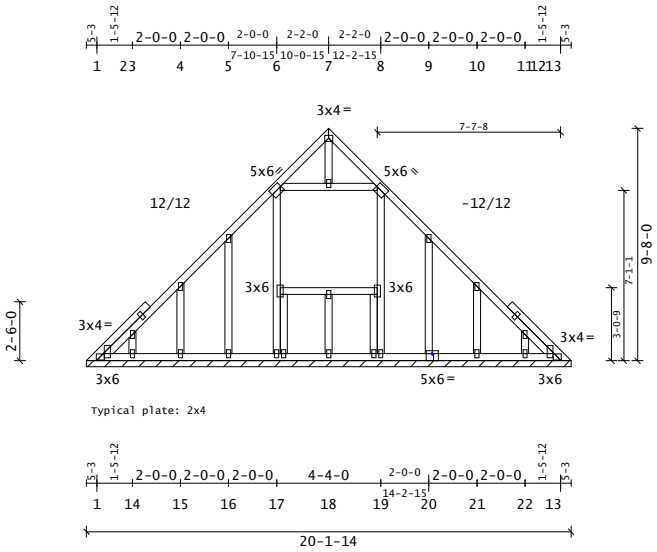

BC Plate offsets (X,Y): J20(0,-1-00)

FBC-2023 | ASCE7-22 | TPI 1-2014

PSF	Live	Dead	Load Duration Factors		
TC	20.0	10.0	Live	Snow	Wind
BC	0.0	1.0	Lbr 1.25	N/A	1.60
Total		31.0	Plt 1.25	N/A	1.60
OH Soffit		2.0			

Spacing: 2-00-00 o.c. Plies: 1
Repetitive Member Increase: Yes
Green Lbr: No | Temp: T ≤ 100˚
Treated Lbr: No | Incised Lbr: No
Seasoned Lbr: Yes | Wet Service: No

Roof Snow Load (Pf) = N/A

Wind Speed (Vult) = 140 mph
Risk Category: II (I = 1.00)
Exposure Category: C
Bldg Dims: L = 61.0 ft B = 59.7 ft
MRH(h)= 18.0ft Kzt = 1.00 Ke = 1.00
Bldg Type: Enclosed
Wind DL (psf): TC = 5.0 BC = 1.0
End Vertical Exposed: L = Yes R = Yes
C&C Location: End Zone | a = 5-11-10
Design: MWFRS/C&C | Reactions: MWFRS
Net Uplift: 0.0 psf

Additional Live Load Checks

10 psf Non-Concurrent BCLL:	Yes
20 psf BCLL Limited Storage:	Yes
200 lb Moving BCLL Access:	No
300 lb Moving TCLL Maintenance:	No
300 lb TCLL/BCLL Person Loading:	No
2000 lb Moving TCLL Office:	No
Partial Length TCLL:	Yes

Plate Tolerance Checks
Fabrication: 20% (Cq = 0.80), u.n.o.
Rotation: +/- 10 degrees, u.n.o.

Material Summary

UTC	2x4	SYP	#2
LTC	2x4	SYP	#2
BC	2x4	SYP	#2
Webs	2x4	SYP	#2

Member Forces Summary (lb)

Max CSI in TC PANEL	3 - 4	0.08
Max CSI in BC PANEL	1 - 14	0.08
Max CSI in Web	17 - 6	0.13

Mbr	Jnt-Jnt	Tens	Comp	CSI
TC	1- 3	266	430	0.07
	3- 4	196	328	0.08
	4- 5	102	209	0.08
	5- 6	57	141	0.07
	6- 7	58	152	0.07
	7- 8	59	152	0.07
	8- 9	57	141	0.07
	9-10	111	213	0.08
	10-11	206	336	0.08
	11-13	275	438	0.07
BC	1-14	336	203	0.08
	13-22	341	210	0.08
	14-15	336	203	0.07
	15-16	336	203	0.07
	16-17	336	203	0.07
	17-18	336	203	0.07
	18-19	336	203	0.07
	19-20	336	203	0.07
	20-21	341	210	0.07
	21-22	341	210	0.07
Web	3-14	132	155	0.03
	4-15	152	189	0.04
	5-16	148	181	0.06
	6-17	132	154	0.13
	8-19	134	154	0.13
	9-20	152	186	0.06
	10-21	153	190	0.04
	11-22	132	154	0.03

Reaction Summary (lb, u.n.o.)

	Maximum	LDF	Minimum	LDF
Horizontal @ Jnt 18:	368	1.60	-368	1.60
Jnt 1 - Jnt 13 (plf):	70	1.25	27	1.60

Reactions not shown: < 400 > -150

Loads Summary
- User-defined unbalanced Top Chord Live Loads (TCLL) occurring at 10-01-09 are based on 1.00 full and 0.00 reduced load factors.
- See Loadcase Report for load combinations and additional details.
- Dead loads have been slope adjusted for any pitch 12.00/12 or greater.

Design Notes
- Plates designed for Cq at 0.80 and Rotational Tolerance of 10.0 degrees.
- Plates located at TC pitch breaks meet the prescriptive minimum size requirement to transfer unblocked diaphragm loads across those joints.

Installation Notes
- Valley Truss application only.
- If this truss is exposed to wind load perpendicular to the plane of the truss, gable studs must be braced according to the Construction Documents, BCSI-B3, or a gable stud bracing detail matching the design wind speed shown. Lateral bracing of the truss itself to resist out-of-plane wind load must be in accordance with the Construction Documents.
- The maximum rake overhang length is 12.0".
- Gable requires 7/16" OSB sheathing on front from 00-14 to 20-02-04; connection details to be provided by the Building Designer.

Deflection Summary
Creep (Kcr) = 2.00

TrussSpan	Limit	Actual(in)	Location
Vert LL	L/240	L/999(-0.00)	19-20
Vert DL	L/120	L/999(-0.00)	19-20
Vert CR	L/180	L/999(-0.00)	19-20
Horz LL	0.75in	(0.01)	@Jt13
Horz CR	1.25in	(0.01)	@Jt13

Bracing Summary
Top Chord: Structural Wood Sheathing
Bot Chord: Gypsum Board Sheathing
Web(s): None;

PAUL MARK BOVE
LICENSE
No. 97028
STATE OF FLORIDA
PROFESSIONAL ENGINEER
COA#30003
6/3/2026

NOTICE A copy of this design shall be furnished to the erection contractor. The design of this individual truss is based on design criteria and requirements supplied by the Truss Manufacturer and relies upon the accuracy and completeness of the information set forth by the Building Designer. A seal on this drawing indicates acceptance of professional engineering responsibility solely for the truss component design shown. See the cover page and the "Important Information & General Notes" page for additional information. All connector plates shall be manufactured by Simpson Strong-Tie Company, Inc in accordance with ESR-2762. All connector plates are 20 gauge, unless the specified plate size is followed by a "-18" which indicates an 18 gauge plate, or "S# 18", which indicates a high tension 18 gauge plate.

SIMPSON Strong-Tie
Component Solutions
Truss Studio V
2026.3.0.65
Helpdesk: 1-866-252-8606
CSHelp@strongtie.com

EngDrwg: 2026.3.1.0_PM

Project: P-1038 - Martinez		Truss ID: V11		
Truss Mfr Customer: Turnsole Builders	19 Lumber Inc	Plies: 1	SID:	0004280738
Truss Mfr Contact: Monica Register		Spacing: 2-00-00 o.c.	TID:	318742
Project Location: Project location has not been provided		Quantity: 1	Date:	06 / 03 / 26
Project Note(s):		Weight: 95.8 lb	Page:	1 of 1

TC Plate offsets (X,Y): None

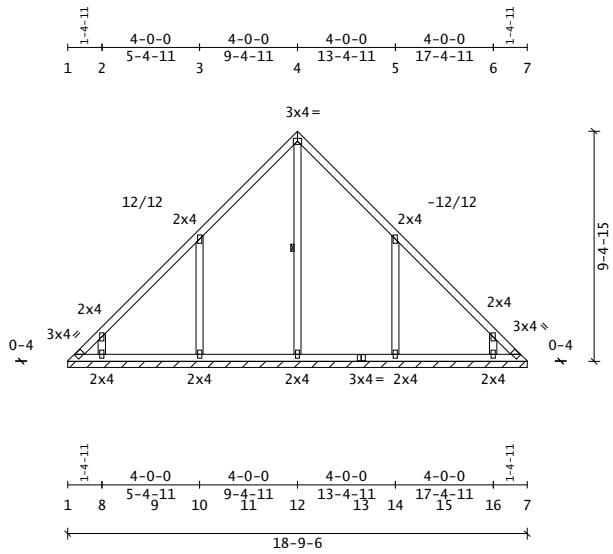

BC Plate offsets (X,Y): None

FBC-2023 | ASCE7-22 | TPI 1-2014

PSF	Live	Dead	Load Duration Factors		
TC	20.0	10.0	Live	Snow	Wind
BC	0.0	1.0	Lbr 1.25	N/A	1.60
Total		31.0	Plt 1.25	N/A	1.60
OH Soffit		2.0			

Spacing: 2-00-00 o.c. Plies: 1
Repetitive Member Increase: Yes
Green Lbr: No | Temp: T ≤ 100˚
Treated Lbr: No | Incised Lbr: No
Seasoned Lbr: Yes | Wet Service: No

Roof Snow Load (Pf) = N/A

Wind Speed (Vult) = 140 mph
Risk Category: II (I = 1.00)
Exposure Category: C
Bldg Dims: L = 61.0 ft B = 59.7 ft
MRH(h)= 18.0ft Kzt = 1.00 Ke = 1.00
Bldg Type: Enclosed
Wind DL (psf): TC = 5.0 BC = 1.0
End Vertical Exposed: L = Yes R = Yes
C&C Location: End Zone | a = 5-11-10
Design: MWFRS/C&C | Reactions: MWFRS
Net Uplift: 0.0 psf

Additional Live Load Checks

10 psf Non-Concurrent BCLL:	Yes
20 psf BCLL Limited Storage:	Yes
200 lb Moving BCLL Access:	No
300 lb Moving TCLL Maintenance:	No
300 lb TCLL/BCLL Person Loading:	No
2000 lb Moving TCLL Office:	No
Partial Length TCLL:	Yes

Plate Tolerance Checks
Fabrication: 20% (Cq = 0.80), u.n.o.
Rotation: +/- 10 degrees, u.n.o.

Material Summary

TC	2x4	SYP	#2
BC	2x4	SYP	#2
Webs	2x4	SYP	#2

Member Forces Summary (lb)

Max CSI in TC PANEL	3 - 4	0.34
Max CSI in BC PANEL	1 - 8	0.05
Max CSI in Web	10 - 3	0.13

Mbr	Jnt-Jnt	Tens	Comp	CSI
TC	1- 2	205	335	0.17
	2- 3	145	216	0.31
	3- 4	183	178	0.34
	4- 5	183	178	0.34
	5- 6	145	216	0.31
	6- 7	205	335	0.17
BC	1- 8	227	106	0.05
	7-16	227	106	0.05
	8- 9	227	106	0.04
	9-10	227	106	0.04
	10-11	227	106	0.04
	11-12	227	106	0.05
	12-13	227	106	0.05
	13-14	227	106	0.04
	14-15	227	106	0.04
	15-16	227	106	0.04
Web	2- 8	244	306	0.07
	3-10	305	301	0.13
	4-12	12	144	0.05
	5-14	305	301	0.13
	6-16	244	306	0.07

Reaction Summary (lb, u.n.o.)

Jnt	XLocation	Model	Maximum	LDF	Minimum	LDF	Brg_Width	Req_Width	Type	Mat	PSI
8	1-05-09	Pin	224	1.25	-232	1.60	18-09-06	02-02	Wall	SPF	425~
10	5-05-09	Pin	305	1.25	-301	1.60	18-09-06	02-02	Wall	SPF	425~
14	13-05-09	Pin	304	1.25	-302	1.60	18-09-06	02-02	Wall	SPF	425~
16	17-05-09	Pin	223	1.25	-232	1.60	18-09-06	02-02	Wall	SPF	425~
Horizontal @ Jnt 12:			334	1.60	-334	1.60					
Jnt 1 - Jnt 7 (plf):			15	1.25	0						

Reactions not shown: < 400 > -150
~ Includes adjustment for Bearing Area Factor, Cb.

Loads Summary
- User-defined unbalanced Top Chord Live Loads (TCLL) occurring at 9-05-09 are based on 1.00 full and 0.00 reduced load factors.
- See Loadcase Report for load combinations and additional details.
- Dead loads have been slope adjusted for any pitch 12.00/12 or greater.

Design Notes
- Plates designed for Cq at 0.80 and Rotational Tolerance of 10.0 degrees.
- Plates located at TC pitch breaks meet the prescriptive minimum size requirement to transfer unblocked diaphragm loads across those joints.

Installation Notes
- Valley Truss application only.
- Continuous Lateral Restraint (CLR) rows require diagonal bracing per D-WEBCLRBRACE. Alternatively, see D-WEBREINFORCE.

Deflection Summary
Creep (Kcr) = 2.00

TrussSpan	Limit	Actual(in)	Location
Vert LL	L/240	L/999(-0.00)	12-14
Vert DL	L/120	L/999(-0.00)	12-14
Vert CR	L/180	L/999(-0.00)	12-14
Horz LL	0.75in	(0.00)	@Jt 7
Horz CR	1.25in	(0.00)	@Jt 7

Bracing Summary
Top Chord: Structural Wood Sheathing
Bot Chord: Gypsum Board Sheathing
Web(s): Continuous Lateral Restraint;
Sgl: 12-4

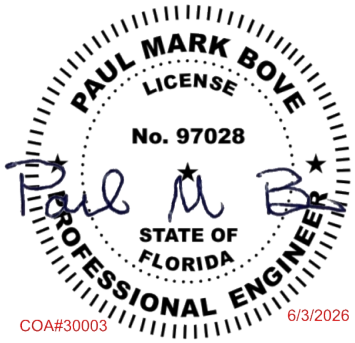

COA#30003 6/3/2026

NOTICE A copy of this design shall be furnished to the erection contractor. The design of this individual truss is based on design criteria and requirements supplied by the Truss Manufacturer and relies upon the accuracy and completeness of the information set forth by the Building Designer. A seal on this drawing indicates acceptance of professional engineering responsibility solely for the truss component design shown. See the cover page and the "Important Information & General Notes" page for additional information. All connector plates shall be manufactured by Simpson Strong-Tie Company, Inc in accordance with ESR-2762. All connector plates are 20 gauge, unless the specified plate size is followed by a "-18" which indicates an 18 gauge plate, or "S# 18", which indicates a high tension 18 gauge plate.

SIMPSON Strong-Tie
Component Solutions
Truss Studio V
2026.3.0.65
Helpdesk: 1-866-252-8606
CSHelp@strongtie.com

EngDrwg: 2026.3.1.0_PM

Project: P-1038 - Martinez		Truss ID: V12		
Truss Mfr Customer: Turnsole Builders	19 Lumber Inc	Plies: 1	SID: 0004280739	
Truss Mfr Contact: Monica Register		Spacing: 2-00-00 o.c.	TID: 318742	
Project Location: Project location has not been provided		Quantity: 1	Date: 06 / 03 / 26	
Project Note(s):		Weight: 84.1 lb	Page: 1 of 1	

TC Plate offsets (X,Y): None

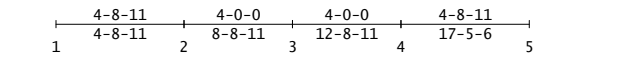

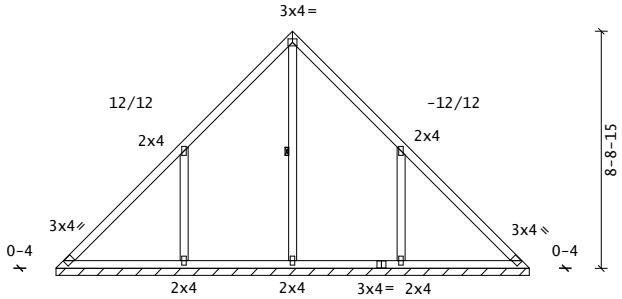

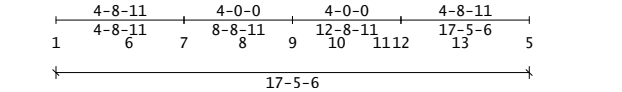

BC Plate offsets (X,Y): None

FBC-2023 | ASCE7-22 | TPI 1-2014

PSF	Live	Dead	Load Duration Factors		
TC	20.0	10.0	Live	Snow	Wind
BC	0.0	1.0	Lbr 1.25	N/A	1.60
Total		31.0	Plt 1.25	N/A	1.60
OH Soffit		2.0			

Spacing: 2-00-00 o.c. Plies: 1
Repetitive Member Increase: Yes
Green Lbr: No | Temp: T ≤ 100˚
Treated Lbr: No | Incised Lbr: No
Seasoned Lbr: Yes | Wet Service: No

Roof Snow Load (Pf) = N/A

Wind Speed (Vult) = 140 mph

Risk Category: II (I = 1.00)
Exposure Category: C
Bldg Dims: L = 61.0 ft B = 59.7 ft
MRH(h)= 18.0ft Kzt = 1.00 Ke = 1.00
Bldg Type: Enclosed
Wind DL (psf): TC = 5.0 BC = 1.0
End Vertical Exposed: L = Yes R = Yes
C&C Location: End Zone | a = 5-11-10
Design: MWFRS/C&C | Reactions: MWFRS
Net Uplift: 0.0 psf

Additional Live Load Checks

10 psf Non-Concurrent BCLL:	Yes
20 psf BCLL Limited Storage:	Yes
200 lb Moving BCLL Access:	No
300 lb Moving TCLL Maintenance:	No
300 lb TCLL/BCLL Person Loading:	No
2000 lb Moving TCLL Office:	No
Partial Length TCLL:	Yes

Plate Tolerance Checks

Fabrication: 20% (Cq = 0.80), u.n.o.
Rotation: +/- 10 degrees, u.n.o.

Material Summary

TC	2x4	SYP	#2
BC	2x4	SYP	#2
Webs	2x4	SYP	#2

Member Forces Summary (lb)

Max CSI in TC PANEL	2 - 3	0.41
Max CSI in BC PANEL	1 - 6	0.27
Max CSI in Web	7 - 2	0.10

Mbr	Jnt-Jnt	Tens	Comp	CSI
TC	1- 2	143	227	0.38
	2- 3	168	180	0.41
	3- 4	168	180	0.41
	4- 5	143	227	0.38
BC	1- 6	210	98	0.27
	5-13	210	98	0.27
	6- 7	210	98	0.10
	7- 8	210	98	0.05
	8- 9	210	98	0.04
	9-10	210	98	0.04
	10-11	210	98	0.04
	11-12	210	98	0.05
	12-13	210	98	0.10
Web	2- 7	323	408	0.10
	3- 9	4	138	0.04
	4-12	323	408	0.10

Reaction Summary (lb, u.n.o.)

Jnt	XLocation	Model	Maximum	LDF	Minimum	LDF	Brg_Width	Req_Width	Type	Mat	PSI
7	4-09-09	Pin	310	1.25	-306	1.60	17-05-06	02-00	Wall	SPF	425~
12	12-09-09	Pin	305	1.25	-303	1.60	17-05-06	02-00	Wall	SPF	425~

Horizontal @ Jnt 9: 309 1.60 -309 1.60
Jnt 1 - Jnt 5 (plf): 37 1.25 0
Reactions not shown: < 400 > -150
~ Includes adjustment for Bearing Area Factor, Cb.

Loads Summary

- User-defined unbalanced Top Chord Live Loads (TCLL) occurring at 8-09-09 are based on 1.00 full and 0.00 reduced load factors.
- See Loadcase Report for load combinations and additional details.
- Dead loads have been slope adjusted for any pitch 12.00/12 or greater.

Design Notes

- Plates designed for Cq at 0.80 and Rotational Tolerance of 10.0 degrees.
- Plates located at TC pitch breaks meet the prescriptive minimum size requirement to transfer unblocked diaphragm loads across those joints.

Installation Notes

- Valley Truss application only.
- Continuous Lateral Restraint (CLR) rows require diagonal bracing per D-WEBCLRBRACE. Alternatively, see D-WEBREINFORCE.

Deflection Summary

Creep (Kcr) = 2.00

TrussSpan	Limit	Actual(in)	Location
Vert LL	L/240	L/999(-0.00)	1- 6
Vert DL	L/120	L/999(-0.00)	1- 6
Vert CR	L/180	L/999(-0.01)	1- 6
Horz LL	0.75in	(0.01)	@Jt 1
Horz CR	1.25in	(0.01)	@Jt 1

Bracing Summary

Top Chord: Structural Wood Sheathing
Bot Chord: Gypsum Board Sheathing
Web(s): Continuous Lateral Restraint;
Sgl: 9-3

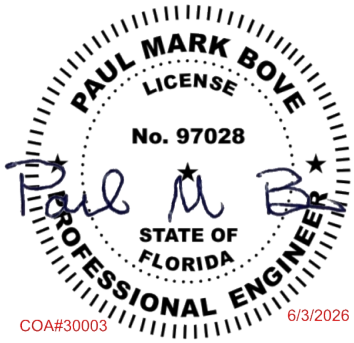

COA#30003 6/3/2026

NOTICE A copy of this design shall be furnished to the erection contractor. The design of this individual truss is based on design criteria and requirements supplied by the Truss Manufacturer and relies upon the accuracy and completeness of the information set forth by the Building Designer. A seal on this drawing indicates acceptance of professional engineering responsibility solely for the truss component design shown. See the cover page and the "Important Information & General Notes" page for additional information. All connector plates shall be manufactured by Simpson Strong-Tie Company, Inc in accordance with ESR-2762. All connector plates are 20 gauge, unless the specified plate size is followed by a "-18" which indicates an 18 gauge plate, or "S# 18", which indicates a high tension 18 gauge plate.

SIMPSON Strong-Tie
Component Solutions
Truss Studio V
2026.3.0.65
Helpdesk: 1-866-252-8606
CSHelp@strongtie.com

EngDrwg: 2026.3.1.0_PM

Project: P-1038 - Martinez		Truss ID: V13		
Truss Mfr Customer: Turnsole Builders	19 Lumber Inc	Plies: 1	SID: 0004280740	
Truss Mfr Contact: Monica Register		Spacing: 2-00-00 o.c.	TID: 318742	
Project Location: Project location has not been provided		Quantity: 1	Date: 06 / 03 / 26	
Project Note(s):		Weight: 77.0 lb	Page: 1 of 1	

TC Plate offsets (X,Y): None

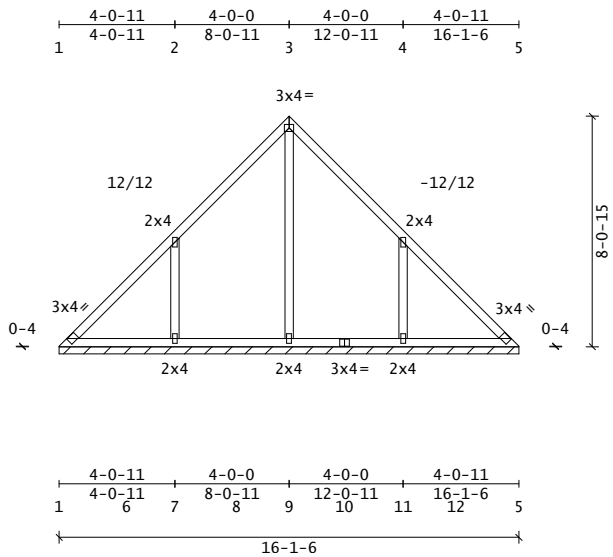

BC Plate offsets (X,Y): None

FBC-2023 | ASCE7-22 | TPI 1-2014

PSF	Live	Dead	Load Duration Factors		
TC	20.0	10.0	Live	Snow	Wind
BC	0.0	1.0	Lbr 1.25	N/A	1.60
Total		31.0	Plt 1.25	N/A	1.60
OH Soffit		2.0			

Spacing: 2-00-00 o.c. Plies: 1
Repetitive Member Increase: Yes
Green Lbr: No | Temp: T ≤ 100˚
Treated Lbr: No | Incised Lbr: No
Seasoned Lbr: Yes | Wet Service: No

Roof Snow Load (Pf) = N/A

Wind Speed (Vult) = 140 mph

Risk Category: II (I = 1.00)
Exposure Category: C
Bldg Dims: L = 61.0 ft B = 59.7 ft
MRH(h)= 18.0ft Kzt = 1.00 Ke = 1.00
Bldg Type: Enclosed
Wind DL (psf): TC = 5.0 BC = 1.0
End Vertical Exposed: L = Yes R = Yes
C&C Location: End Zone | a = 5-11-10
Design: MWFRS/C&C | Reactions: MWFRS
Net Uplift: 0.0 psf

Additional Live Load Checks

10 psf Non-Concurrent BCLL:	Yes
20 psf BCLL Limited Storage:	Yes
200 lb Moving BCLL Access:	No
300 lb Moving TCLL Maintenance:	No
300 lb TCLL/BCLL Person Loading:	No
2000 lb Moving TCLL Office:	No
Partial Length TCLL:	Yes

Plate Tolerance Checks

Fabrication: 20% (Cq = 0.80), u.n.o.
Rotation: +/- 10 degrees, u.n.o.

Material Summary

TC	2x4	SYP	#2
BC	2x4	SYP	#2
Webs	2x4	SYP	#2

Member Forces Summary (lb)

Max CSI in TC PANEL	2 - 3	0.36
Max CSI in BC PANEL	1 - 6	0.16
Max CSI in Web	9 - 3	0.15

Mbr	Jnt-Jnt	Tens	Comp	CSI
TC	1- 2	134	216	0.33
	2- 3	152	180	0.36
	3- 4	152	180	0.36
	4- 5	134	216	0.33
BC	1- 6	192	90	0.16
	5-12	192	90	0.16
	6- 7	192	90	0.07
	7- 8	192	90	0.04
	8- 9	192	90	0.04
	9-10	192	90	0.04
	10-11	192	90	0.04
	11-12	192	90	0.07
Web	2- 7	297	384	0.09
	3- 9	0	143	0.15
	4-11	297	384	0.09

Reaction Summary (lb, u.n.o.)

Jnt	XLocation	Model	Maximum	LDF	Minimum	LDF	Brg_Width	Req_Width	Type	Mat	PSI
7	4-01-09	Pin	290	1.25	-285	1.60	16-01-06	01-14	Wall	SPF	425~
11	12-01-09	Pin	290	1.25	-285	1.60	16-01-06	01-14	Wall	SPF	425~
Horizontal @ Jnt 9:			283	1.60	-283	1.60					
Jnt 1 - Jnt 5 (plf):			38	1.25	0						

Reactions not shown: < 400 > -150
~ Includes adjustment for Bearing Area Factor, Cb.

Loads Summary

- User-defined unbalanced Top Chord Live Loads (TCLL) occurring at 8-01-09 are based on 1.00 full and 0.00 reduced load factors.
- See Loadcase Report for load combinations and additional details.
- Dead loads have been slope adjusted for any pitch 12.00/12 or greater.

Design Notes

- Plates designed for Cq at 0.80 and Rotational Tolerance of 10.0 degrees.
- Plates located at TC pitch breaks meet the prescriptive minimum size requirement to transfer unblocked diaphragm loads across those joints.

Installation Notes

- Valley Truss application only.

Deflection Summary

Creep (Kcr) = 2.00

TrussSpan	Limit	Actual(in)	Location
Vert LL	L/240	L/999(-0.00)	12- 5
Vert DL	L/120	L/999(-0.00)	12- 5
Vert CR	L/180	L/999(-0.00)	12- 5
Horz LL	0.75in	(0.01)	@Jt 5
Horz CR	1.25in	(0.01)	@Jt 5

Bracing Summary

Top Chord: Structural Wood Sheathing
Bot Chord: Gypsum Board Sheathing
Web(s): None;

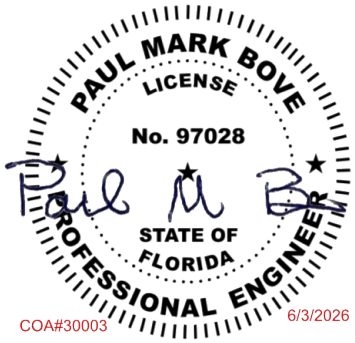

COA#30003 6/3/2026

NOTICE A copy of this design shall be furnished to the erection contractor. The design of this individual truss is based on design criteria and requirements supplied by the Truss Manufacturer and relies upon the accuracy and completeness of the information set forth by the Building Designer. A seal on this drawing indicates acceptance of professional engineering responsibility solely for the truss component design shown. See the cover page and the "Important Information & General Notes" page for additional information. All connector plates shall be manufactured by Simpson Strong-Tie Company, Inc in accordance with ESR-2762. All connector plates are 20 gauge, unless the specified plate size is followed by a "-18" which indicates an 18 gauge plate, or "S# 18", which indicates a high tension 18 gauge plate.

SIMPSON Strong-Tie

Component Solutions
Truss Studio V
2026.3.0.65
Helpdesk: 1-866-252-8606
CSHelp@strongtie.com

Project: P-1038 - Martinez		Truss ID: V14		
Truss Mfr Customer: Turnsole Builders	19 Lumber Inc	Plies: 1	SID:	0004280741
Truss Mfr Contact: Monica Register		Spacing: 2-00-00 o.c.	TID:	318742
Project Location: Project location has not been provided		Quantity: 1	Date:	06 / 03 / 26
Project Note(s):		Weight: 68.3 lb	Page:	1 of 1

TC Plate offsets (X,Y): None

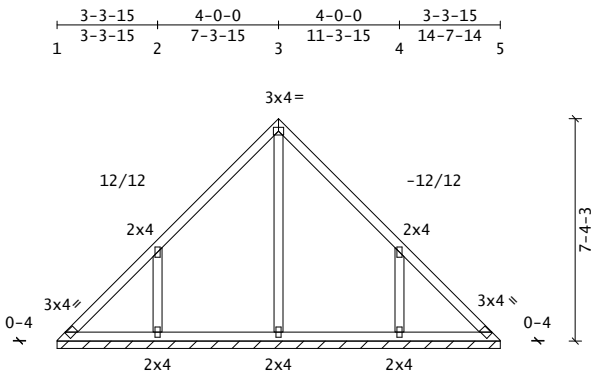

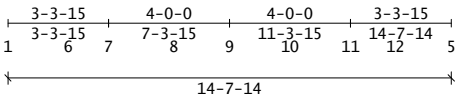

BC Plate offsets (X,Y): None

FBC-2023 | ASCE7-22 | TPI 1-2014

PSF	Live	Dead	Load Duration Factors		
TC	20.0	10.0	Live	Snow	Wind
BC	0.0	1.0	Lbr 1.25	N/A	1.60
Total		31.0	Plt 1.25	N/A	1.60
OH Soffit		2.0			

Spacing: 2-00-00 o.c. Plies: 1
Repetitive Member Increase: Yes
Green Lbr: No | Temp: T ≤ 100˚
Treated Lbr: No | Incised Lbr: No
Seasoned Lbr: Yes | Wet Service: No

Roof Snow Load (Pf) = N/A

Wind Speed (Vult) = 140 mph

Risk Category: II (I = 1.00)
Exposure Category: C
Bldg Dims: L = 61.0 ft B = 59.7 ft
MRH(h)= 18.0ft Kzt = 1.00 Ke = 1.00
Bldg Type: Enclosed
Wind DL (psf): TC = 5.0 BC = 1.0
End Vertical Exposed: L = Yes R = Yes
C&C Location: End Zone | a = 5-11-10
Design: MWFRS/C&C | Reactions: MWFRS
Net Uplift: 0.0 psf

Additional Live Load Checks

10 psf Non-Concurrent BCLL:	Yes
20 psf BCLL Limited Storage:	Yes
200 lb Moving BCLL Access:	No
300 lb Moving TCLL Maintenance:	No
300 lb TCLL/BCLL Person Loading:	No
2000 lb Moving TCLL Office:	No
Partial Length TCLL:	Yes

Plate Tolerance Checks

Fabrication: 20% (Cq = 0.80), u.n.o.
Rotation: +/- 10 degrees, u.n.o.

Material Summary

TC	2x4	SYP	#2
BC	2x4	SYP	#2
Webs	2x4	SYP	#2

Member Forces Summary (lb)

Max CSI in TC PANEL	2 - 3	0.34
Max CSI in BC PANEL	1 - 6	0.10
Max CSI in Web	9 - 3	0.12

Mbr	Jnt-Jnt	Tens	Comp	CSI
TC	1- 2	125	205	0.30
	2- 3	135	181	0.34
	3- 4	135	181	0.34
	4- 5	125	205	0.30
BC	1- 6	172	82	0.10
	5-12	172	82	0.10
	6- 7	172	82	0.05
	7- 8	172	82	0.04
	8- 9	172	82	0.04
	9-10	172	82	0.04
	10-11	172	82	0.04
	11-12	172	82	0.05
Web	2- 7	274	366	0.09
	3- 9	0	146	0.12
	4-11	274	366	0.09

Reaction Summary (lb, u.n.o.)

Jnt	XLocation	Model	Maximum	LDF	Minimum	LDF	Brg_Width	Req_Width	Type	Mat	PSI
7	3-04-13	Pin	273	1.25	-267	1.60	14-07-14	01-11	Wall	SPF	425~
11	11-04-13	Pin	273	1.25	-267	1.60	14-07-14	01-11	Wall	SPF	425~

Horizontal @ Jnt 9: 255 1.60 -255 1.60
Jnt 1 - Jnt 5 (plf): 35 1.25 0
Reactions not shown: < 400 > -150
~ Includes adjustment for Bearing Area Factor, Cb.

Loads Summary

- User-defined unbalanced Top Chord Live Loads (TCLL) occurring at 7-04-13 are based on 1.00 full and 0.00 reduced load factors.
- See Loadcase Report for load combinations and additional details.
- Dead loads have been slope adjusted for any pitch 12.00/12 or greater.

Design Notes

- Plates designed for Cq at 0.80 and Rotational Tolerance of 10.0 degrees.
- Plates located at TC pitch breaks meet the prescriptive minimum size requirement to transfer unblocked diaphragm loads across those joints.
- Lumber and plating have been applied symmetrically.

Installation Notes

- Valley Truss application only.

Deflection Summary

Creep (Kcr) = 2.00

TrussSpan	Limit	Actual(in)	Location
Vert LL	L/240	L/999(-0.00)	8- 9
Vert DL	L/120	L/999(-0.00)	8- 9
Vert CR	L/180	L/999(-0.00)	8- 9
Horz LL	0.75in	(0.00)	@Jt 5
Horz CR	1.25in	(0.01)	@Jt 5

Bracing Summary

Top Chord: Structural Wood Sheathing
Bot Chord: Gypsum Board Sheathing
Web(s): None;

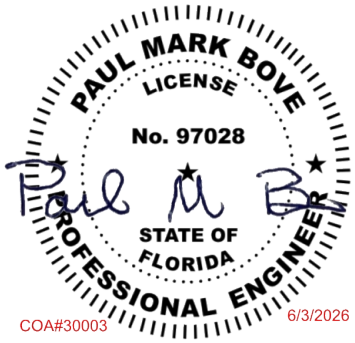

COA#30003 6/3/2026

NOTICE A copy of this design shall be furnished to the erection contractor. The design of this individual truss is based on design criteria and requirements supplied by the Truss Manufacturer and relies upon the accuracy and completeness of the information set forth by the Building Designer. A seal on this drawing indicates acceptance of professional engineering responsibility solely for the truss component design shown. See the cover page and the "Important Information & General Notes" page for additional information. All connector plates shall be manufactured by Simpson Strong-Tie Company, Inc in accordance with ESR-2762. All connector plates are 20 gauge, unless the specified plate size is followed by a "-18" which indicates an 18 gauge plate, or "S# 18", which indicates a high tension 18 gauge plate.

SIMPSON Strong-Tie

Component Solutions
Truss Studio V
2026.3.0.65
Helpdesk: 1-866-252-8606
CSHelp@strongtie.com

Project: P-1038 - Martinez		Truss ID: V15		
Truss Mfr Customer: Turnsole Builders	19 Lumber Inc	Plies: 1	SID: 0004280742	
Truss Mfr Contact: Monica Register		Spacing: 2-00-00 o.c.	TID: 318742	
Project Location: Project location has not been provided		Quantity: 1	Date: 06 / 03 / 26	
Project Note(s):		Weight: 55.9 lb	Page: 1 of 1	

TC Plate offsets (X,Y): None

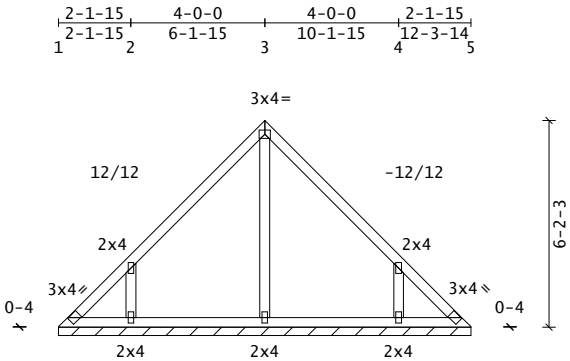

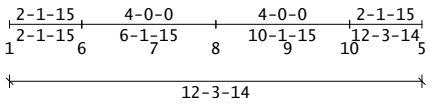

BC Plate offsets (X,Y): None

FBC-2023 | ASCE7-22 | TPI 1-2014

PSF	Live	Dead	Load Duration Factors		
TC	20.0	10.0	Live	Snow	Wind
BC	0.0	1.0	Lbr 1.25	N/A	1.60
Total		31.0	Plt 1.25	N/A	1.60
OH Soffit		2.0			

Spacing: 2-00-00 o.c. Plies: 1
Repetitive Member Increase: Yes
Green Lbr: No | Temp: T ≤ 100˚
Treated Lbr: No | Incised Lbr: No
Seasoned Lbr: Yes | Wet Service: No

Roof Snow Load (Pf) = N/A

Wind Speed (Vult) = 140 mph

Risk Category: II (I = 1.00)
Exposure Category: C
Bldg Dims: L = 61.0 ft B = 59.7 ft
MRH(h)= 18.0ft Kzt = 1.00 Ke = 1.00
Bldg Type: Enclosed
Wind DL (psf): TC = 5.0 BC = 1.0
End Vertical Exposed: L = Yes R = Yes
C&C Location: End Zone | a = 5-11-10
Design: MWFRS/C&C | Reactions: MWFRS
Net Uplift: 0.0 psf

Additional Live Load Checks

10 psf Non-Concurrent BCLL:	Yes
20 psf BCLL Limited Storage:	Yes
200 lb Moving BCLL Access:	No
300 lb Moving TCLL Maintenance:	No
300 lb TCLL/BCLL Person Loading:	No
2000 lb Moving TCLL Office:	No
Partial Length TCLL:	Yes

Plate Tolerance Checks

Fabrication: 20% (Cq = 0.80), u.n.o.
Rotation: +/- 10 degrees, u.n.o.

Material Summary

TC	2x4	SYP	#2
BC	2x4	SYP	#2
Webs	2x4	SYP	#2

Member Forces Summary (lb)

Max CSI in TC PANEL	2 - 3	0.34
Max CSI in BC PANEL	1 - 6	0.03
Max CSI in Web	6 - 2	0.10

Mbr	Jnt-Jnt	Tens	Comp	CSI
TC	1- 2	116	195	0.29
	2- 3	110	183	0.34
	3- 4	110	183	0.34
	4- 5	116	195	0.29
BC	1- 6	141	68	0.03
	5-10	141	68	0.03
	6- 7	141	68	0.03
	7- 8	141	68	0.03
	8- 9	141	68	0.03
	9-10	141	68	0.03
Web	2- 6	256	360	0.10
	3- 8	0	144	0.08
	4-10	256	360	0.10

Reaction Summary (lb, u.n.o.)

Jnt	XLocation	Model	Maximum	LDF	Minimum	LDF	Brg_Width	Req_Width	Type	Mat	PSI
6	2-02-13	Pin	256	1.25	-250	1.60	12-03-14	01-08	Wall	SPF	425~
10	10-02-13	Pin	256	1.25	-250	1.60	12-03-14	01-08	Wall	SPF	425~

Horizontal @ Jnt 8: 211 1.60 -211 1.60
Jnt 1 - Jnt 5 (plf): 28 1.25 0
Reactions not shown: < 400 > -150
~ Includes adjustment for Bearing Area Factor, Cb.

Loads Summary

- User-defined unbalanced Top Chord Live Loads (TCLL) occurring at 6-02-13 are based on 1.00 full and 0.00 reduced load factors.
- See Loadcase Report for load combinations and additional details.
- Dead loads have been slope adjusted for any pitch 12.00/12 or greater.

Design Notes

- Plates designed for Cq at 0.80 and Rotational Tolerance of 10.0 degrees.
- Plates located at TC pitch breaks meet the prescriptive minimum size requirement to transfer unblocked diaphragm loads across those joints.
- Lumber and plating have been applied symmetrically.

Installation Notes

- Valley Truss application only.

Deflection Summary

Creep (Kcr) = 2.00

TrussSpan	Limit	Actual(in)	Location
Vert LL	L/240	L/999(-0.00)	6- 7
Vert DL	L/120	L/999(-0.00)	6- 7
Vert CR	L/180	L/999(-0.00)	6- 7
Horz LL	0.75in	(0.00)	@Jt 5
Horz CR	1.25in	(0.00)	@Jt 5

Bracing Summary

Top Chord: Structural Wood Sheathing
Bot Chord: Gypsum Board Sheathing
Web(s): None;

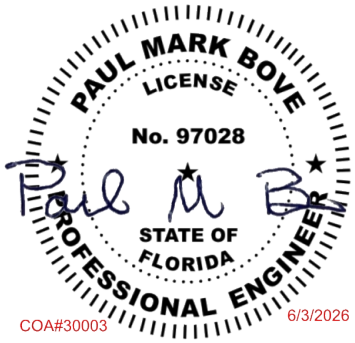

COA#30003 6/3/2026

NOTICE A copy of this design shall be furnished to the erection contractor. The design of this individual truss is based on design criteria and requirements supplied by the Truss Manufacturer and relies upon the accuracy and completeness of the information set forth by the Building Designer. A seal on this drawing indicates acceptance of professional engineering responsibility solely for the truss component design shown. See the cover page and the "Important Information & General Notes" page for additional information. All connector plates shall be manufactured by Simpson Strong-Tie Company, Inc in accordance with ESR-2762. All connector plates are 20 gauge, unless the specified plate size is followed by a "-18" which indicates an 18 gauge plate, or "S# 18", which indicates a high tension 18 gauge plate.

SIMPSON Strong-Tie
Component Solutions
Truss Studio V
2026.3.0.65
Helpdesk: 1-866-252-8606
CSHelp@strongtie.com

EngDrwg: 2026.3.1.0_PM

Project: P-1038 - Martinez		Truss ID: V16	
Truss Mfr Customer: Turnsole Builders	19 Lumber Inc	Plies: 1	SID: 0004280743
Truss Mfr Contact: Monica Register		Spacing: 2-00-00 o.c.	TID: 318742
Project Location: Project location has not been provided		Quantity: 1	Date: 06 / 03 / 26
Project Note(s):		Weight: 40.0 lb	Page: 1 of 1

TC Plate offsets (X,Y): None

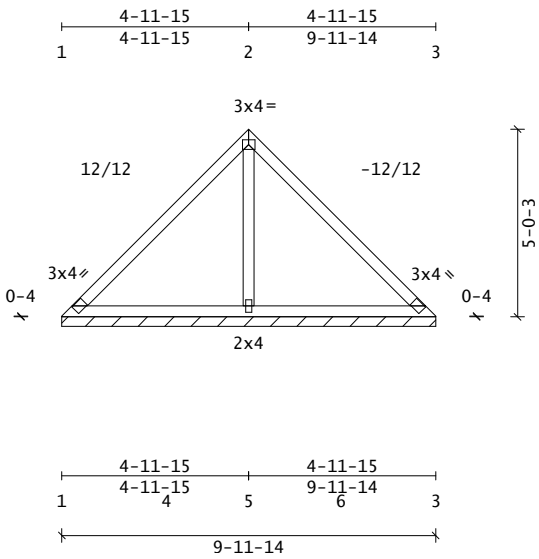

BC Plate offsets (X,Y): None

FBC-2023 | ASCE7-22 | TPI 1-2014

PSF	Live	Dead	Load Duration Factors		
TC	20.0	10.0	Live	Snow	Wind
BC	0.0	1.0	Lbr 1.25	N/A	1.60
Total		31.0	Plt 1.25	N/A	1.60
OH Soffit		2.0			

Spacing: 2-00-00 o.c. Plies: 1
Repetitive Member Increase: Yes
Green Lbr: No | Temp: T ≤ 100˚
Treated Lbr: No | Incised Lbr: No
Seasoned Lbr: Yes | Wet Service: No

Roof Snow Load (Pf) = N/A

Wind Speed (Vult) = 140 mph

Risk Category: II (I = 1.00)
Exposure Category: C
Bldg Dims: L = 61.0 ft B = 59.7 ft
MRH(h)= 18.0ft Kzt = 1.00 Ke = 1.00
Bldg Type: Enclosed
Wind DL (psf): TC = 5.0 BC = 1.0
End Vertical Exposed: L = Yes R = Yes
C&C Location: End Zone | a = 5-11-10
Design: MWFRS/C&C | Reactions: MWFRS
Net Uplift: 0.0 psf

Additional Live Load Checks

10 psf Non-Concurrent BCLL:	Yes
20 psf BCLL Limited Storage:	Yes
200 lb Moving BCLL Access:	No
300 lb Moving TCLL Maintenance:	No
300 lb TCLL/BCLL Person Loading:	No
2000 lb Moving TCLL Office:	No
Partial Length TCLL:	Yes

Plate Tolerance Checks

Fabrication: 20% (Cq = 0.80), u.n.o.
Rotation: +/- 10 degrees, u.n.o.

Material Summary

TC	2x4	SYP	#2
BC	2x4	SYP	#2
Webs	2x4	SYP	#2

Member Forces Summary (lb)

Max CSI in TC PANEL	1 - 2	0.43
Max CSI in BC PANEL	1 - 4	0.34
Max CSI in Web	5 - 2	0.05

Mbr	Jnt-Jnt	Tens	Comp	CSI
TC	1- 2	91	210	0.43
	2- 3	91	210	0.43
BC	1- 4	108	57	0.34
	3- 6	108	57	0.34
	4- 5	108	57	0.12
	5- 6	108	57	0.12
Web	2- 5	30	155	0.05

Reaction Summary (lb, u.n.o.)

	Maximum	LDF	Minimum	LDF
Horizontal @ Jnt 5:	166	1.60	-166	1.60
Jnt 1 - Jnt 3 (plf):	70	1.25	26	1.60

Reactions not shown: < 400 > -150

Loads Summary

- User-defined unbalanced Top Chord Live Loads (TCLL) occurring at 5-00-13 are based on 1.00 full and 0.00 reduced load factors.
- See Loadcase Report for load combinations and additional details.
- Dead loads have been slope adjusted for any pitch 12.00/12 or greater.

Design Notes

- Plates designed for Cq at 0.80 and Rotational Tolerance of 10.0 degrees.
- Plates located at TC pitch breaks meet the prescriptive minimum size requirement to transfer unblocked diaphragm loads across those joints.
- Lumber and plating have been applied symmetrically.

Installation Notes

- Valley Truss application only.

Deflection Summary

Creep (Kcr) = 2.00

TrussSpan	Limit	Actual(in)	Location
Vert LL	L/240	L/999(-0.01)	1- 4
Vert DL	L/120	L/999(-0.00)	1- 4
Vert CR	L/180	L/999(-0.01)	1- 4
Horz LL	0.75in	(0.01)	@Jt 3
Horz CR	1.25in	(0.02)	@Jt 3

Bracing Summary

Top Chord: Structural Wood Sheathing
Bot Chord: Gypsum Board Sheathing
Web(s): None;

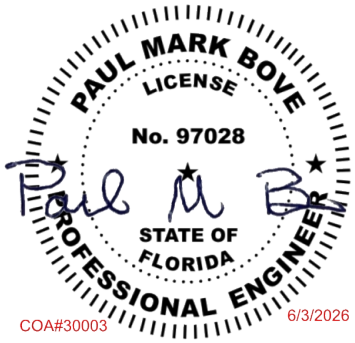

COA#30003 6/3/2026

NOTICE A copy of this design shall be furnished to the erection contractor. The design of this individual truss is based on design criteria and requirements supplied by the Truss Manufacturer and relies upon the accuracy and completeness of the information set forth by the Building Designer. A seal on this drawing indicates acceptance of professional engineering responsibility solely for the truss component design shown. See the cover page and the "Important Information & General Notes" page for additional information. All connector plates shall be manufactured by Simpson Strong-Tie Company, Inc in accordance with ESR-2762. All connector plates are 20 gauge, unless the specified plate size is followed by a "-18" which indicates an 18 gauge plate, or "S# 18", which indicates a high tension 18 gauge plate.

SIMPSON Strong-Tie

Component Solutions
Truss Studio V
2026.3.0.65
Helpdesk: 1-866-252-8606
CSHelp@strongtie.com

Project: P-1038 - Martinez		Truss ID: V17	
Truss Mfr Customer: Turnsole Builders	19 Lumber Inc	Plies: 1	SID: 0004280744
Truss Mfr Contact: Monica Register		Spacing: 2-00-00 o.c.	TID: 318742
Project Location: Project location has not been provided		Quantity: 1	Date: 06 / 03 / 26
Project Note(s):		Weight: 30.7 lb	Page: 1 of 1

TC Plate offsets (X,Y): None

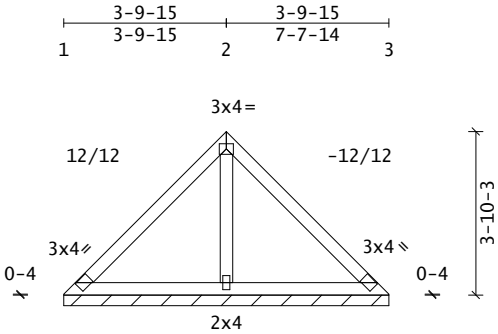

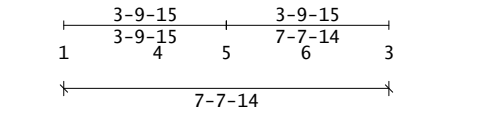

BC Plate offsets (X,Y): None

FBC-2023 | ASCE7-22 | TPI 1-2014

PSF	Live	Dead	Load Duration Factors		
TC	20.0	10.0	Live	Snow	Wind
BC	0.0	1.0	Lbr 1.25	N/A	1.60
Total		31.0	Plt 1.25	N/A	1.60
OH Soffit		2.0			

Spacing: 2-00-00 o.c. Plies: 1
Repetitive Member Increase: Yes
Green Lbr: No | Temp: T ≤ 100˚
Treated Lbr: No | Incised Lbr: No
Seasoned Lbr: Yes | Wet Service: No

Roof Snow Load (Pf) = N/A

Wind Speed (Vult) = 140 mph

Risk Category: II (I = 1.00)
Exposure Category: C
Bldg Dims: L = 61.0 ft B = 59.7 ft
MRH(h)= 18.0ft Kzt = 1.00 Ke = 1.00
Bldg Type: Enclosed
Wind DL (psf): TC = 5.0 BC = 1.0
End Vertical Exposed: L = Yes R = Yes
C&C Location: End Zone | a = 5-11-10
Design: MWFRS/C&C | Reactions: MWFRS
Net Uplift: 0.0 psf

Additional Live Load Checks

10 psf Non-Concurrent BCLL:	Yes
20 psf BCLL Limited Storage:	Yes
200 lb Moving BCLL Access:	No
300 lb Moving TCLL Maintenance:	No
300 lb TCLL/BCLL Person Loading:	No
2000 lb Moving TCLL Office:	No
Partial Length TCLL:	Yes

Plate Tolerance Checks

Fabrication: 20% (Cq = 0.80), u.n.o.
Rotation: +/- 10 degrees, u.n.o.

Material Summary

TC	2x4	SYP	#2
BC	2x4	SYP	#2
Webs	2x4	SYP	#2

Member Forces Summary (lb)

Max CSI in TC PANEL	1 - 2	0.24
Max CSI in BC PANEL	1 - 4	0.21
Max CSI in Web	5 - 2	0.02

Mbr	Jnt-Jnt	Tens	Comp	CSI
TC	1- 2	63	154	0.24
	2- 3	63	154	0.24
BC	1- 4	80	40	0.21
	3- 6	80	40	0.21
	4- 5	80	40	0.06
	5- 6	80	40	0.06
Web	2- 5	28	116	0.02

Reaction Summary (lb, u.n.o.)

	Maximum	LDF	Minimum	LDF
Horizontal @ Jnt 5:	121	1.60	-121	1.60
Jnt 1 - Jnt 3 (plf):	70	1.25	26	1.60

Reactions not shown: < 400 > -150

Loads Summary

- User-defined unbalanced Top Chord Live Loads (TCLL) occurring at 3-10-13 are based on 1.00 full and 0.00 reduced load factors.
- See Loadcase Report for load combinations and additional details.
- Dead loads have been slope adjusted for any pitch 12.00/12 or greater.

Design Notes

- Plates designed for Cq at 0.80 and Rotational Tolerance of 10.0 degrees.
- Plates located at TC pitch breaks meet the prescriptive minimum size requirement to transfer unblocked diaphragm loads across those joints.
- Lumber and plating have been applied symmetrically.

Installation Notes

- Valley Truss application only.

Deflection Summary

Creep (Kcr) = 2.00

TrussSpan	Limit	Actual(in)	Location
Vert LL	L/240	L/999(-0.00)	1- 4
Vert DL	L/120	L/999(-0.00)	1- 4
Vert CR	L/180	L/999(-0.00)	1- 4
Horz LL	0.75in	(0.01)	@Jt 1
Horz CR	1.25in	(0.01)	@Jt 1

Bracing Summary

Top Chord: Structural Wood Sheathing
Bot Chord: Gypsum Board Sheathing
Web(s): None;

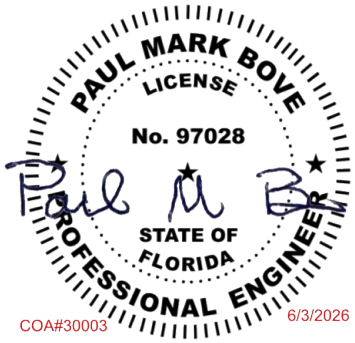

COA#30003 6/3/2026

NOTICE A copy of this design shall be furnished to the erection contractor. The design of this individual truss is based on design criteria and requirements supplied by the Truss Manufacturer and relies upon the accuracy and completeness of the information set forth by the Building Designer. A seal on this drawing indicates acceptance of professional engineering responsibility solely for the truss component design shown. See the cover page and the "Important Information & General Notes" page for additional information. All connector plates shall be manufactured by Simpson Strong-Tie Company, Inc in accordance with ESR-2762. All connector plates are 20 gauge, unless the specified plate size is followed by a "-18" which indicates an 18 gauge plate, or "S# 18", which indicates a high tension 18 gauge plate.

SIMPSON Strong-Tie
Component Solutions
Truss Studio V
2026.3.0.65
Helpdesk: 1-866-252-8606
CSHelp@strongtie.com

EngDrwg: 2026.3.1.0_PM

Project: P-1038 - Martinez		Truss ID: V18		
Truss Mfr Customer: Turnsole Builders	19 Lumber Inc	Plies: 1	SID:	0004280745
Truss Mfr Contact: Monica Register		Spacing: 2-00-00 o.c.	TID:	318742
Project Location: Project location has not been provided		Quantity: 1	Date:	06 / 03 / 26
Project Note(s):		Weight: 21.5 lb	Page:	1 of 1

TC Plate offsets (X,Y): None

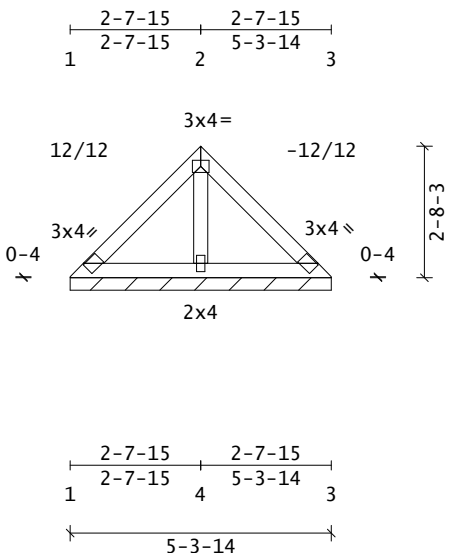

BC Plate offsets (X,Y): None

FBC-2023 | ASCE7-22 | TPI 1-2014

PSF	Live	Dead	Load Duration Factors		
TC	20.0	10.0	Live	Snow	Wind
BC	0.0	1.0	Lbr 1.25	N/A	1.60
Total		31.0	Plt 1.25	N/A	1.60
OH Soffit		2.0			

Spacing: 2-00-00 o.c. Plies: 1
Repetitive Member Increase: Yes
Green Lbr: No | Temp: T ≤ 100˚
Treated Lbr: No | Incised Lbr: No
Seasoned Lbr: Yes | Wet Service: No

Roof Snow Load (Pf) = N/A

Wind Speed (Vult) = 140 mph
Risk Category: II (I = 1.00)
Exposure Category: C
Bldg Dims: L = 61.0 ft B = 59.7 ft
MRH(h)= 18.0ft Kzt = 1.00 Ke = 1.00
Bldg Type: Enclosed
Wind DL (psf): TC = 5.0 BC = 1.0
End Vertical Exposed: L = Yes R = Yes
C&C Location: End Zone | a = 5-11-10
Design: MWFRS/C&C | Reactions: MWFRS
Net Uplift: 0.0 psf

Additional Live Load Checks

10 psf Non-Concurrent BCLL:	Yes
20 psf BCLL Limited Storage:	Yes
200 lb Moving BCLL Access:	No
300 lb Moving TCLL Maintenance:	No
300 lb TCLL/BCLL Person Loading:	No
2000 lb Moving TCLL Office:	No
Partial Length TCLL:	Yes

Plate Tolerance Checks
Fabrication: 20% (Cq = 0.80), u.n.o.
Rotation: +/- 10 degrees, u.n.o.

Material Summary

TC	2x4	SYP	#2
BC	2x4	SYP	#2
Webs	2x4	SYP	#2

Member Forces Summary (lb)

Max CSI in TC PANEL	1 - 2	0.13
Max CSI in BC PANEL	1 - 4	0.10
Max CSI in Web	4 - 2	0.01

Mbr	Jnt-Jnt	Tens	Comp	CSI
TC	1- 2	38	99	0.13
	2- 3	38	99	0.13
BC	1- 4	51	24	0.10
	3- 4	51	24	0.10
Web	2- 4	25	76	0.01

Reaction Summary (lb, u.n.o.)

	Maximum	LDF	Minimum	LDF
Horizontal @ Jnt 4:	76	1.60	-76	1.60
Jnt 1 - Jnt 3 (plf):	70	1.25	27	1.60

Reactions not shown: < 400 > -150

Loads Summary
- User-defined unbalanced Top Chord Live Loads (TCLL) occurring at 2-08-13 are based on 1.00 full and 0.00 reduced load factors.
- See Loadcase Report for load combinations and additional details.
- Dead loads have been slope adjusted for any pitch 12.00/12 or greater.

Design Notes
- Plates designed for Cq at 0.80 and Rotational Tolerance of 10.0 degrees.
- Plates located at TC pitch breaks meet the prescriptive minimum size requirement to transfer unblocked diaphragm loads across those joints.
- Lumber and plating have been applied symmetrically.

Installation Notes
- Valley Truss application only.

Deflection Summary
Creep (Kcr) = 2.00

TrussSpan	Limit	Actual(in)	Location
Vert LL	L/240	L/999(-0.00)	1- 4
Vert DL	L/120	L/999(-0.00)	1- 4
Vert CR	L/180	L/999(-0.00)	1- 4
Horz LL	0.75in	(0.00)	@Jt 1
Horz CR	1.25in	(0.00)	@Jt 1

Bracing Summary
Top Chord: Structural Wood Sheathing
Bot Chord: Gypsum Board Sheathing
Web(s): None;

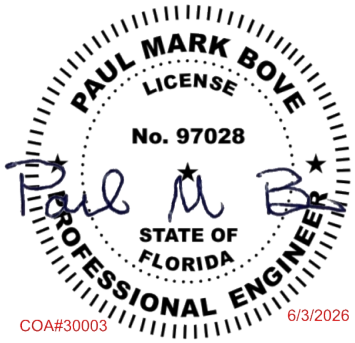

COA#30003 6/3/2026

NOTICE A copy of this design shall be furnished to the erection contractor. The design of this individual truss is based on design criteria and requirements supplied by the Truss Manufacturer and relies upon the accuracy and completeness of the information set forth by the Building Designer. A seal on this drawing indicates acceptance of professional engineering responsibility solely for the truss component design shown. See the cover page and the "Important Information & General Notes" page for additional information. All connector plates shall be manufactured by Simpson Strong-Tie Company, Inc in accordance with ESR-2762. All connector plates are 20 gauge, unless the specified plate size is followed by a "-18" which indicates an 18 gauge plate, or "S# 18", which indicates a high tension 18 gauge plate.

SIMPSON Strong-Tie

Component Solutions
Truss Studio V
2026.3.0.65
Helpdesk: 1-866-252-8606
CSHelp@strongtie.com

Project: P-1038 - Martinez		Truss ID: V19		
Truss Mfr Customer: Turnsole Builders	19 Lumber Inc	Plies: 1	SID: 0004280746	
Truss Mfr Contact: Monica Register		Spacing: 2-00-00 o.c.	TID: 318742	
Project Location: Project location has not been provided		Quantity: 1	Date: 06 / 01 / 26	
Project Note(s):		Weight: 12.2 lb	Page: 1 of 1	

TC Plate offsets (X,Y): None

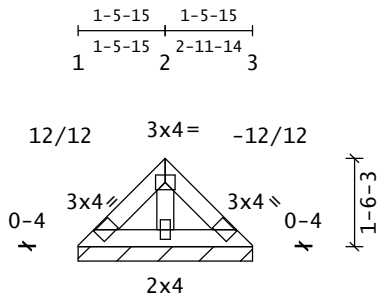

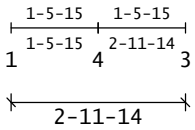

BC Plate offsets (X,Y): None

FBC-2023 | ASCE7-22 | TPI 1-2014

PSF	Live	Dead	Load Duration Factors		
TC	20.0	10.0	Live	Snow	Wind
BC	0.0	1.0	Lbr 1.25	N/A	1.60
Total		31.0	Plt 1.25	N/A	1.60
OH Soffit		2.0			

Spacing: 2-00-00 o.c. Plies: 1
Repetitive Member Increase: Yes
Green Lbr: No | Temp: T ≤ 100˚
Treated Lbr: No | Incised Lbr: No
Seasoned Lbr: Yes | Wet Service: No

Roof Snow Load (Pf) = N/A

Wind Speed (Vult) = 140 mph
Risk Category: II (I = 1.00)
Exposure Category: C
Bldg Dims: L = 61.0 ft B = 59.7 ft
MRH(h)= 18.0ft Kzt = 1.00 Ke = 1.00
Bldg Type: Enclosed
Wind DL (psf): TC = 5.0 BC = 1.0
End Vertical Exposed: L = Yes R = Yes
C&C Location: End Zone | a = 5-11-10
Design: MWFRS/C&C | Reactions: MWFRS
Net Uplift: 0.0 psf

Additional Live Load Checks

10 psf Non-Concurrent BCLL:	Yes
20 psf BCLL Limited Storage:	Yes
200 lb Moving BCLL Access:	No
300 lb Moving TCLL Maintenance:	No
300 lb TCLL/BCLL Person Loading:	No
2000 lb Moving TCLL Office:	No
Partial Length TCLL:	Yes

Plate Tolerance Checks
Fabrication: 20% (Cq = 0.80), u.n.o.
Rotation: +/- 10 degrees, u.n.o.

Material Summary

TC	2x4	SYP	#2
BC	2x4	SYP	#2
Webs	2x4	SYP	#2

Member Forces Summary (lb)

Max CSI in TC PANEL	1 - 2	0.02
Max CSI in BC PANEL	1 - 4	0.02
Max CSI in Web	4 - 2	0.01

Mbr	Jnt-Jnt	Tens	Comp	CSI
TC	1- 2	15	43	0.02
	2- 3	15	43	0.02
BC	1- 4	19	8	0.02
	3- 4	19	8	0.02
Web	2- 4	15	35	0.01

Reaction Summary (lb, u.n.o.)

	Maximum	LDF	Minimum	LDF
Horizontal @ Jnt 4:	32	1.60	-32	1.60
Jnt 1 - Jnt 3 (plf):	70	1.25	27	1.60

Reactions not shown: < 400 > -150

Loads Summary
- User-defined unbalanced Top Chord Live Loads (TCLL) occurring at 1-06-13 are based on 1.00 full and 0.00 reduced load factors.
- See Loadcase Report for load combinations and additional details.
- Dead loads have been slope adjusted for any pitch 12.00/12 or greater.

Design Notes
- Plates designed for Cq at 0.80 and Rotational Tolerance of 10.0 degrees.
- Plates located at TC pitch breaks meet the prescriptive minimum size requirement to transfer unblocked diaphragm loads across those joints.
- Lumber and plating have been applied symmetrically.

Installation Notes
- Valley Truss application only.

Deflection Summary
Creep (Kcr) = 2.00

TrussSpan	Limit	Actual(in)	Location
Vert LL	L/240	L/999(-0.00)	1- 4
Vert DL	L/120	L/999(-0.00)	1- 4
Vert CR	L/180	L/999(-0.00)	1- 4
Horz LL	0.75in	(0.00)	@Jt 1
Horz CR	1.25in	(0.00)	@Jt 1

Bracing Summary
Top Chord: Structural Wood Sheathing
Bot Chord: Gypsum Board Sheathing
Web(s): None;

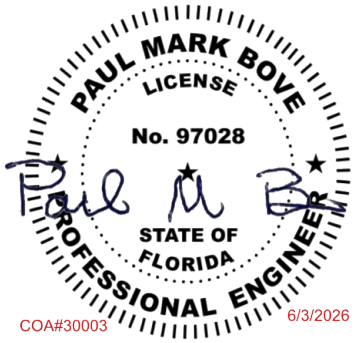

COA#30003 6/3/2026

NOTICE A copy of this design shall be furnished to the erection contractor. The design of this individual truss is based on design criteria and requirements supplied by the Truss Manufacturer and relies upon the accuracy and completeness of the information set forth by the Building Designer. A seal on this drawing indicates acceptance of professional engineering responsibility solely for the truss component design shown. See the cover page and the "Important Information & General Notes" page for additional information. All connector plates shall be manufactured by Simpson Strong-Tie Company, Inc in accordance with ESR-2762. All connector plates are 20 gauge, unless the specified plate size is followed by a "-18" which indicates an 18 gauge plate, or "S# 18", which indicates a high tension 18 gauge plate.

SIMPSON Strong-Tie
Component Solutions
Truss Studio V
2026.3.0.65
Helpdesk: 1-866-252-8606
CSHelp@strongtie.com

EngDrwg: 2026.3.1.0_PM

Project: P-1038 - Martinez		Truss ID: V20	
Truss Mfr Customer: Turnsole Builders	19 Lumber Inc	Plies: 1	SID: 0004280747
Truss Mfr Contact: Monica Register		Spacing: 2-00-00 o.c.	TID: 318742
Project Location: Project location has not been provided		Quantity: 1	Date: 06 / 03 / 26
Project Note(s):		Weight: 71.6 lb	Page: 1 of 1

TC Plate offsets (X,Y): None

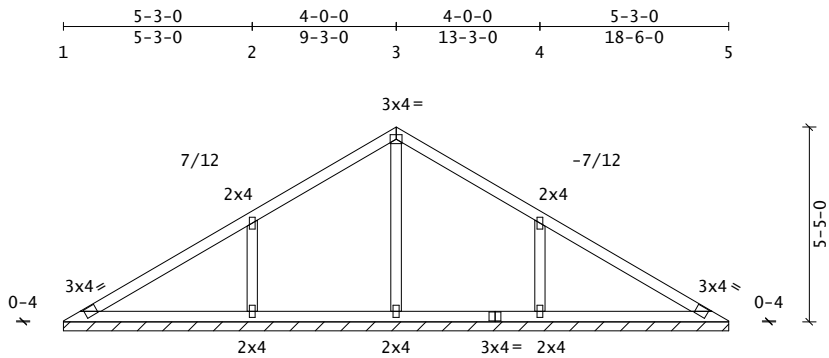

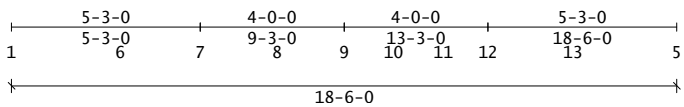

BC Plate offsets (X,Y): None

FBC-2023 | ASCE7-22 | TPI 1-2014

PSF	Live	Dead	Load Duration Factors		
TC	20.0	10.0	Live	Snow	Wind
BC	0.0	1.0	Lbr 1.25	N/A	1.60
Total		31.0	Plt 1.25	N/A	1.60
OH Soffit		2.0			

Spacing: 2-00-00 o.c. Plies: 1
Repetitive Member Increase: Yes
Green Lbr: No | Temp: T ≤ 100˚
Treated Lbr: No | Incised Lbr: No
Seasoned Lbr: Yes | Wet Service: No

Roof Snow Load (Pf) = N/A

Wind Speed (Vult) = 140 mph
Risk Category: II (I = 1.00)
Exposure Category: C
Bldg Dims: L = 61.0 ft B = 59.7 ft
MRH(h)= 18.0ft Kzt = 1.00 Ke = 1.00
Bldg Type: Enclosed
Wind DL (psf): TC = 5.0 BC = 1.0
End Vertical Exposed: L = Yes R = Yes
C&C Location: End Zone | a = 5-11-10
Design: MWFRS/C&C | Reactions: MWFRS
Net Uplift: 0.0 psf

Additional Live Load Checks

10 psf Non-Concurrent BCLL:	Yes
20 psf BCLL Limited Storage:	Yes
200 lb Moving BCLL Access:	No
300 lb Moving TCLL Maintenance:	No
300 lb TCLL/BCLL Person Loading:	No
2000 lb Moving TCLL Office:	No
Partial Length TCLL:	Yes

Plate Tolerance Checks
Fabrication: 20% (Cq = 0.80), u.n.o.
Rotation: +/- 10 degrees, u.n.o.

Material Summary

TC	2x4	SYP	#2
BC	2x4	SYP	#2
Webs	2x4	SYP	#2

Member Forces Summary (lb)

Max CSI in TC PANEL	2 - 3	0.27
Max CSI in BC PANEL	1 - 6	0.13
Max CSI in Web	9 - 3	0.07

Mbr	Jnt-Jnt	Tens	Comp	CSI
TC	1- 2	71	98	0.25
	2- 3	125	112	0.27
	3- 4	125	112	0.27
	4- 5	71	98	0.25
BC	1- 6	108	54	0.13
	5-13	108	54	0.13
	6- 7	108	54	0.05
	7- 8	108	54	0.02
	8- 9	108	54	0.03
	9-10	108	54	0.03
	10-11	108	54	0.01
	11-12	108	54	0.02
	12-13	108	54	0.05
Web	2- 7	223	290	0.06
	3- 9	0	159	0.07
	4-12	223	290	0.06

Reaction Summary (lb, u.n.o.)

Jnt	XLocation	Model	Maximum	LDF	Minimum	LDF	Brg_Width	Req_Width	Type	Mat	PSI
7	5-04-08	Pin	281	1.25	-208	1.60	18-06-00	01-13	Wall	SPF	425~
12	13-04-08	Pin	279	1.25	-207	1.60	18-06-00	01-13	Wall	SPF	425~
Horizontal @ Jnt 9:			163	1.60	-163	1.60					
Jnt 1 - Jnt 5 (plf):			31	1.25	8	1.60					

Reactions not shown: < 400 > -150
~ Includes adjustment for Bearing Area Factor, Cb.

Loads Summary
· User-defined unbalanced Top Chord Live Loads (TCLL) occurring at 9-04-08 are based on 1.00 full and 0.00 reduced load factors.
· See Loadcase Report for load combinations and additional details.

Design Notes
· Plates designed for Cq at 0.80 and Rotational Tolerance of 10.0 degrees.
· Plates located at TC pitch breaks meet the prescriptive minimum size requirement to transfer unblocked diaphragm loads across those joints.

Installation Notes
· Valley Truss application only.

Deflection Summary
Creep (Kcr) = 2.00

TrussSpan	Limit	Actual(in)	Location
Vert LL	L/240	L/999(-0.00)	1- 6
Vert DL	L/120	L/999(-0.00)	1- 6
Vert CR	L/180	L/999(-0.01)	1- 6
Horz LL	0.75in	(0.01)	@Jt 1
Horz CR	1.25in	(0.01)	@Jt 1

Bracing Summary
Top Chord: Structural Wood Sheathing
Bot Chord: Gypsum Board Sheathing
Web(s): None;

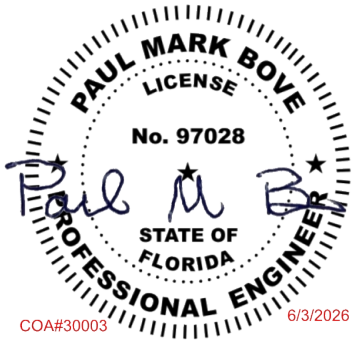

COA#30003 6/3/2026

NOTICE A copy of this design shall be furnished to the erection contractor. The design of this individual truss is based on design criteria and requirements supplied by the Truss Manufacturer and relies upon the accuracy and completeness of the information set forth by the Building Designer. A seal on this drawing indicates acceptance of professional engineering responsibility solely for the truss component design shown. See the cover page and the "Important Information & General Notes" page for additional information. All connector plates shall be manufactured by Simpson Strong-Tie Company, Inc in accordance with ESR-2762. All connector plates are 20 gauge, unless the specified plate size is followed by a "-18" which indicates an 18 gauge plate, or "S# 18", which indicates a high tension 18 gauge plate.

SIMPSON Strong-Tie
Component Solutions
Truss Studio V
2026.3.0.65
Helpdesk: 1-866-252-8606
CSHelp@strongtie.com

EngDrwg: 2026.3.1.0_PM

Project: P-1038 - Martinez		Truss ID: V21	
Truss Mfr Customer: Turnsole Builders	19 Lumber Inc	Plies: 1	SID: 0004280748
Truss Mfr Contact: Monica Register		Spacing: 2-00-00 o.c.	TID: 318742
Project Location: Project location has not been provided		Quantity: 1	Date: 06 / 01 / 26
Project Note(s):		Weight: 54.2 lb	Page: 1 of 1

TC Plate offsets (X,Y): None

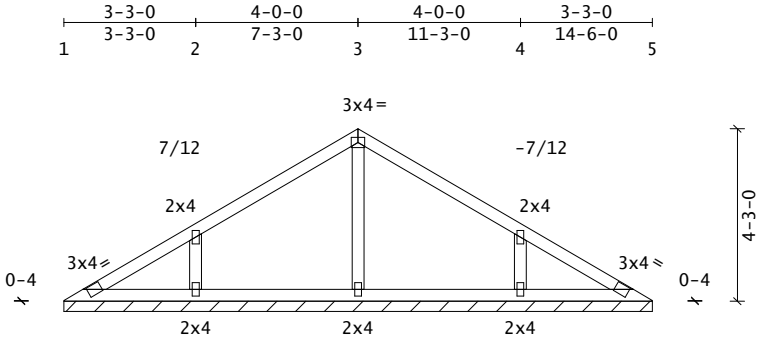

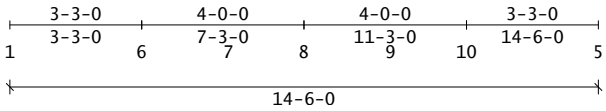

BC Plate offsets (X,Y): None

FBC-2023 | ASCE7-22 | TPI 1-2014

PSF	Live	Dead	Load Duration Factors		
TC	20.0	10.0	Live	Snow	Wind
BC	0.0	1.0	Lbr 1.25	N/A	1.60
Total		31.0	Plt 1.25	N/A	1.60
OH Soffit		2.0			

Spacing: 2-00-00 o.c. Plies: 1
Repetitive Member Increase: Yes
Green Lbr: No | Temp: T ≤ 100˚
Treated Lbr: No | Incised Lbr: No
Seasoned Lbr: Yes | Wet Service: No

Roof Snow Load (Pf) = N/A

Wind Speed (Vult) = 140 mph

Risk Category: II (I = 1.00)
Exposure Category: C
Bldg Dims: L = 61.0 ft B = 59.7 ft
MRH(h)= 18.0ft Kzt = 1.00 Ke = 1.00
Bldg Type: Enclosed
Wind DL (psf): TC = 5.0 BC = 1.0
End Vertical Exposed: L = Yes R = Yes
C&C Location: End Zone | a = 5-11-10
Design: MWFRS/C&C | Reactions: MWFRS
Net Uplift: 0.0 psf

Additional Live Load Checks

10 psf Non-Concurrent BCLL:	Yes
20 psf BCLL Limited Storage:	Yes
200 lb Moving BCLL Access:	No
300 lb Moving TCLL Maintenance:	No
300 lb TCLL/BCLL Person Loading:	No
2000 lb Moving TCLL Office:	No
Partial Length TCLL:	Yes

Plate Tolerance Checks

Fabrication: 20% (Cq = 0.80), u.n.o.
Rotation: +/- 10 degrees, u.n.o.

Material Summary

TC	2x4	SYP	#2
BC	2x4	SYP	#2
Webs	2x4	SYP	#2

Member Forces Summary (lb)

Max CSI in TC PANEL	3 - 4	0.21
Max CSI in BC PANEL	1 - 6	0.03
Max CSI in Web	6 - 2	0.06

Mbr	Jnt-Jnt	Tens	Comp	CSI
TC	1- 2	57	67	0.18
	2- 3	93	114	0.20
	3- 4	93	114	0.21
	4- 5	57	67	0.18
BC	1- 6	81	42	0.03
	5-10	81	42	0.03
	6- 7	81	42	0.02
	7- 8	81	42	0.01
	8- 9	81	42	0.01
	9-10	81	42	0.02
Web	2- 6	179	236	0.06
	3- 8	45	175	0.05
	4-10	179	236	0.06

Reaction Summary (lb, u.n.o.)

Jnt	XLocation	Model	Maximum	LDF	Minimum	LDF	Brg_Width	Req_Width	Type	Mat	PSI
6	3-04-08	Pin	247	1.25	-180	1.60	14-06-00	01-08	Wall	SPF	425~
10	11-04-08	Pin	247	1.25	-180	1.60	14-06-00	01-08	Wall	SPF	425~

Horizontal @ Jnt 8: 123 1.60 -123 1.60
Jnt 1 - Jnt 5 (plf): 27 1.25 6 1.60
Reactions not shown: < 400 > -150
~ Includes adjustment for Bearing Area Factor, Cb.

Loads Summary

- User-defined unbalanced Top Chord Live Loads (TCLL) occurring at 7-04-08 are based on 1.00 full and 0.00 reduced load factors.
- See Loadcase Report for load combinations and additional details.

Design Notes

- Plates designed for Cq at 0.80 and Rotational Tolerance of 10.0 degrees.
- Plates located at TC pitch breaks meet the prescriptive minimum size requirement to transfer unblocked diaphragm loads across those joints.
- Lumber and plating have been applied symmetrically.

Installation Notes

- Valley Truss application only.

Deflection Summary

Creep (Kcr) = 2.00

TrussSpan	Limit	Actual(in)	Location
Vert LL	L/240	L/999(-0.00)	10- 5
Vert DL	L/120	L/999(-0.00)	10- 5
Vert CR	L/180	L/999(-0.00)	10- 5
Horz LL	0.75in	(0.00)	@Jt 1
Horz CR	1.25in	(0.00)	@Jt 1

Bracing Summary

Top Chord: Structural Wood Sheathing
Bot Chord: Gypsum Board Sheathing
Web(s): None;

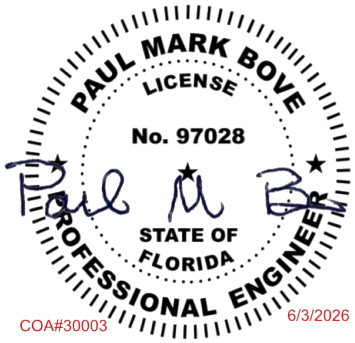

COA#30003 6/3/2026

NOTICE A copy of this design shall be furnished to the erection contractor. The design of this individual truss is based on design criteria and requirements supplied by the Truss Manufacturer and relies upon the accuracy and completeness of the information set forth by the Building Designer. A seal on this drawing indicates acceptance of professional engineering responsibility solely for the truss component design shown. See the cover page and the "Important Information & General Notes" page for additional information. All connector plates shall be manufactured by Simpson Strong-Tie Company, Inc in accordance with ESR-2762. All connector plates are 20 gauge, unless the specified plate size is followed by a "-18" which indicates an 18 gauge plate, or "S# 18", which indicates a high tension 18 gauge plate.

SIMPSON Strong-Tie
Component Solutions
Truss Studio V
2026.3.0.65
Helpdesk: 1-866-252-8606
CSHelp@strongtie.com

EngDrwg: 2026.3.1.0_PM

Project: P-1038 - Martinez		Truss ID: V22	
Truss Mfr Customer: Turnsole Builders	19 Lumber Inc	Plies: 1	SID: 0004280749
Truss Mfr Contact: Monica Register		Spacing: 2-00-00 o.c.	TID: 318742
Project Location: Project location has not been provided		Quantity: 1	Date: 06 / 01 / 26
Project Note(s):		Weight: 34.7 lb	Page: 1 of 1

TC Plate offsets (X,Y): None

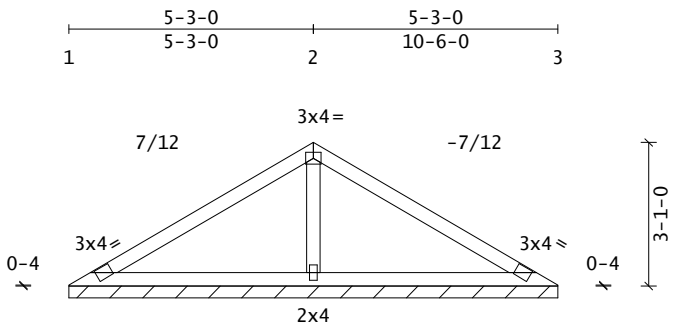

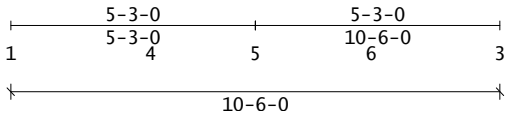

BC Plate offsets (X,Y): None

FBC-2023 | ASCE7-22 | TPI 1-2014

PSF	Live	Dead	Load Duration	Factors		
TC	20.0	10.0		Live	Snow	Wind
BC	0.0	1.0	Lbr	1.25	N/A	1.60
Total		31.0	Plt	1.25	N/A	1.60
OH Soffit		2.0				

Spacing: 2-00-00 o.c. Plies: 1
Repetitive Member Increase: Yes
Green Lbr: No | Temp: T ≤ 100˚
Treated Lbr: No | Incised Lbr: No
Seasoned Lbr: Yes | Wet Service: No

Roof Snow Load (Pf) = N/A

Wind Speed (Vult) = 140 mph
Risk Category: II (I = 1.00)
Exposure Category: C
Bldg Dims: L = 61.0 ft B = 59.7 ft
MRH(h)= 18.0ft Kzt = 1.00 Ke = 1.00
Bldg Type: Enclosed
Wind DL (psf): TC = 5.0 BC = 1.0
End Vertical Exposed: L = Yes R = Yes
C&C Location: End Zone | a = 5-11-10
Design: MWFRS/C&C | Reactions: MWFRS
Net Uplift: 0.0 psf

Additional Live Load Checks

10 psf Non-Concurrent BCLL:	Yes
20 psf BCLL Limited Storage:	Yes
200 lb Moving BCLL Access:	No
300 lb Moving TCLL Maintenance:	No
300 lb TCLL/BCLL Person Loading:	No
2000 lb Moving TCLL Office:	No
Partial Length TCLL:	Yes

Plate Tolerance Checks
Fabrication: 20% (Cq = 0.80), u.n.o.
Rotation: +/- 10 degrees, u.n.o.

Material Summary

TC	2x4	SYP	#2
BC	2x4	SYP	#2
Webs	2x4	SYP	#2

Member Forces Summary (lb)

Max CSI in TC PANEL	1 - 2	0.26
Max CSI in BC PANEL	1 - 4	0.21
Max CSI in Web	5 - 2	0.04

Mbr	Jnt-Jnt	Tens	Comp	CSI
TC	1- 2	70	136	0.26
	2- 3	70	136	0.26
BC	1- 4	65	32	0.21
	3- 6	65	32	0.21
	4- 5	65	32	0.08
	5- 6	65	32	0.08
Web	2- 5	92	193	0.04

Reaction Summary (lb, u.n.o.)

	Maximum	LDF	Minimum	LDF
Horizontal @ Jnt 5:	84	1.60	-84	1.60
Jnt 1 - Jnt 3 (plf):	62	1.25	31	1.60

Reactions not shown: < 400 > -150

Loads Summary
- User-defined unbalanced Top Chord Live Loads (TCLL) occurring at 5-04-08 are based on 1.00 full and 0.00 reduced load factors.
- See Loadcase Report for load combinations and additional details.

Design Notes
- Plates designed for Cq at 0.80 and Rotational Tolerance of 10.0 degrees.
- Plates located at TC pitch breaks meet the prescriptive minimum size requirement to transfer unblocked diaphragm loads across those joints.
- Lumber and plating have been applied symmetrically.

Installation Notes
- Valley Truss application only.

Deflection Summary
Creep (Kcr) = 2.00

TrussSpan	Limit	Actual(in)	Location
Vert LL	L/240	L/999(-0.01)	1- 4
Vert DL	L/120	L/999(-0.00)	1- 4
Vert CR	L/180	L/999(-0.01)	1- 4
Horz LL	0.75in	(0.01)	@Jt 3
Horz CR	1.25in	(0.01)	@Jt 3

Bracing Summary
Top Chord: Structural Wood Sheathing
Bot Chord: Gypsum Board Sheathing
Web(s): None;

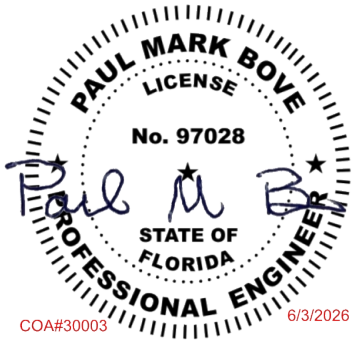

COA#30003 6/3/2026

NOTICE A copy of this design shall be furnished to the erection contractor. The design of this individual truss is based on design criteria and requirements supplied by the Truss Manufacturer and relies upon the accuracy and completeness of the information set forth by the Building Designer. A seal on this drawing indicates acceptance of professional engineering responsibility solely for the truss component design shown. See the cover page and the "Important Information & General Notes" page for additional information. All connector plates shall be manufactured by Simpson Strong-Tie Company, Inc in accordance with ESR-2762. All connector plates are 20 gauge, unless the specified plate size is followed by a "-18" which indicates an 18 gauge plate, or "S# 18", which indicates a high tension 18 gauge plate.

SIMPSON Strong-Tie

Component Solutions
Truss Studio V
2026.3.0.65
Helpdesk: 1-866-252-8606
CSHelp@strongtie.com

Project: P-1038 - Martinez		Truss ID: V23		
Truss Mfr Customer: Turnsole Builders	19 Lumber Inc	Plies: 1	SID:	0004280750
Truss Mfr Contact: Monica Register		Spacing: 2-00-00 o.c.	TID:	318742
Project Location: Project location has not been provided		Quantity: 1	Date:	06 / 01 / 26
Project Note(s):		Weight: 21.4 lb	Page:	1 of 1

TC Plate offsets (X,Y): None

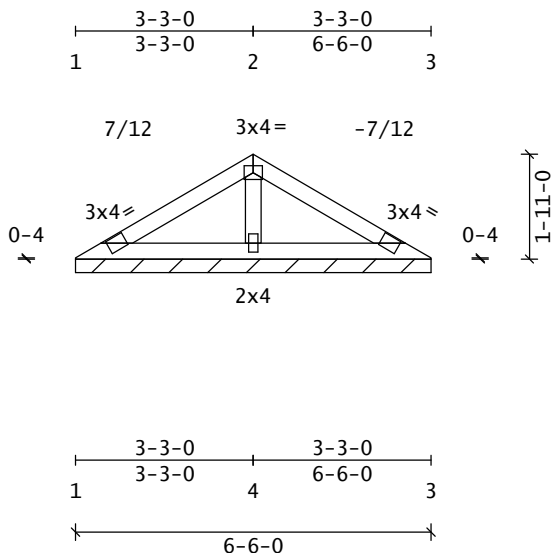

BC Plate offsets (X,Y): None

FBC-2023 | ASCE7-22 | TPI 1-2014

PSF	Live	Dead	Load Duration Factors		
TC	20.0	10.0	Live	Snow	Wind
BC	0.0	1.0	Lbr 1.25	N/A	1.60
Total		31.0	Plt 1.25	N/A	1.60
OH Soffit		2.0			

Spacing: 2-00-00 o.c. Plies: 1
Repetitive Member Increase: Yes
Green Lbr: No | Temp: T ≤ 100˚
Treated Lbr: No | Incised Lbr: No
Seasoned Lbr: Yes | Wet Service: No

Roof Snow Load (Pf) = N/A

Wind Speed (Vult) = 140 mph

Risk Category: II (I = 1.00)
Exposure Category: C
Bldg Dims: L = 61.0 ft B = 59.7 ft
MRH(h)= 18.0ft Kzt = 1.00 Ke = 1.00
Bldg Type: Enclosed
Wind DL (psf): TC = 5.0 BC = 1.0
End Vertical Exposed: L = Yes R = Yes
C&C Location: End Zone | a = 5-11-10
Design: MWFRS/C&C | Reactions: MWFRS
Net Uplift: 0.0 psf

Additional Live Load Checks

10 psf Non-Concurrent BCLL:	Yes
20 psf BCLL Limited Storage:	Yes
200 lb Moving BCLL Access:	No
300 lb Moving TCLL Maintenance:	No
300 lb TCLL/BCLL Person Loading:	No
2000 lb Moving TCLL Office:	No
Partial Length TCLL:	Yes

Plate Tolerance Checks

Fabrication: 20% (Cq = 0.80), u.n.o.
Rotation: +/- 10 degrees, u.n.o.

Material Summary

TC	2x4	SYP	#2
BC	2x4	SYP	#2
Webs	2x4	SYP	#2

Member Forces Summary (lb)

Max CSI in TC PANEL	1 - 2	0.11
Max CSI in BC PANEL	1 - 4	0.07
Max CSI in Web	4 - 2	0.03

Mbr	Jnt-Jnt	Tens	Comp	CSI
TC	1- 2	38	75	0.11
	2- 3	38	75	0.11
BC	1- 4	39	16	0.07
	3- 4	39	16	0.07
Web	2- 4	58	108	0.03

Reaction Summary (lb, u.n.o.)

	Maximum	LDF	Minimum	LDF
Horizontal @ Jnt 4:	44	1.60	-44	1.60
Jnt 1 - Jnt 3 (plf):	62	1.25	31	1.60

Reactions not shown: < 400 > -150

Loads Summary

- User-defined unbalanced Top Chord Live Loads (TCLL) occurring at 3-04-08 are based on 1.00 full and 0.00 reduced load factors.
- See Loadcase Report for load combinations and additional details.

Design Notes

- Plates designed for Cq at 0.80 and Rotational Tolerance of 10.0 degrees.
- Plates located at TC pitch breaks meet the prescriptive minimum size requirement to transfer unblocked diaphragm loads across those joints.
- Lumber and plating have been applied symmetrically.

Installation Notes

- Valley Truss application only.

Deflection Summary

Creep (Kcr) = 2.00

TrussSpan	Limit	Actual(in)	Location
Vert LL	L/240	L/999(-0.00)	4- 3
Vert DL	L/120	L/999(-0.00)	4- 3
Vert CR	L/180	L/999(-0.00)	4- 3
Horz LL	0.75in	(0.00)	@Jt 3
Horz CR	1.25in	(0.00)	@Jt 3

Bracing Summary

Top Chord: Structural Wood Sheathing
Bot Chord: Gypsum Board Sheathing
Web(s): None;

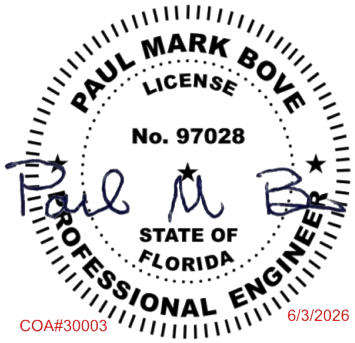

COA#30003 6/3/2026

NOTICE A copy of this design shall be furnished to the erection contractor. The design of this individual truss is based on design criteria and requirements supplied by the Truss Manufacturer and relies upon the accuracy and completeness of the information set forth by the Building Designer. A seal on this drawing indicates acceptance of professional engineering responsibility solely for the truss component design shown. See the cover page and the "Important Information & General Notes" page for additional information. All connector plates shall be manufactured by Simpson Strong-Tie Company, Inc in accordance with ESR-2762. All connector plates are 20 gauge, unless the specified plate size is followed by a "-18" which indicates an 18 gauge plate, or "S# 18", which indicates a high tension 18 gauge plate.

SIMPSON Strong-Tie

Component Solutions
Truss Studio V
2026.3.0.65
Helpdesk: 1-866-252-8606
CSHelp@strongtie.com

PIGGYBACK TRUSS CONNECTION DETAIL

TD-CPS-0001

Date: 09/04/2014 | Rev: D | Pg. 1 of 1

This detail provides minimum connection requirements between a cap truss and a base truss of a piggyback assembly for assemblies that meet the following conditions and design requirements:

- the cap truss has continuous bearing or bearings at 2' o.c. max.;
- the cap truss contains vertical web members at 4' o.c. max;
- the cap trusses are spaced no greater than 24" o.c.;
- the pitch does not exceed 12/12;
- the cap truss span does not exceed 100'; for spans > 36', see Table 2 Footnote 5
- the cap truss supports no point loads or drag loads (see detail TD-CPS-0002 for drag load connection requirements)

Design Requirements:

Max. Wind Speed: 140 mph (nominal)
Max. Mean Roof Height: 30'
Exp. Category: B or C

Load Duration Factor: 1.6
Lumber: SPF or Better
(Min. SG = 0.42)

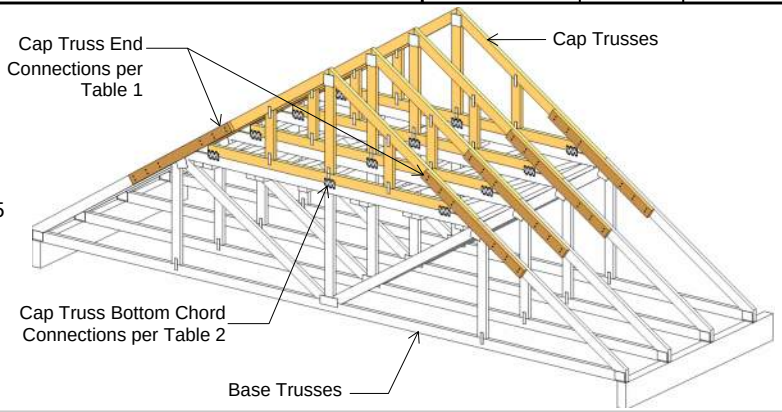

TABLE 1 - Connection Requirements At Each End of Cap Truss (One Face Only)

Cap Truss Span	Max. Wind Speed (mph)		End Connection Options	Fasteners[1]
	Nominal	Ultimate		
Up to 18'	100	125	Sheathing - See Note 2	---
	140	180	4' 2x Scab	16-10d nails
			LSTA18 or CS20 Strap	14-10dx1.5 nails
18' < Span <= 100'	120	150	4' 2x Scab	16-10d nails
	130	160	LSTA18 or CS20 Strap	14-10dx1.5 nails
	140	180	6' 2x Scab	24-10d nails
				10-SDS 1/4x3
			LSTA30 or CS18 Strap	20-10dx1.5

See footnotes below

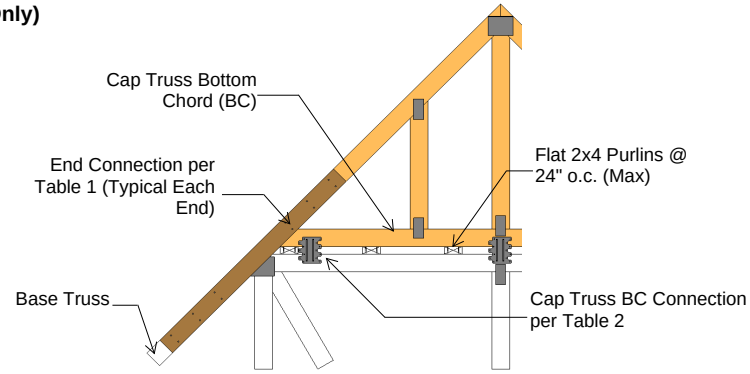

Figure 1 - Typical Piggyback Assembly with 1 1/2" Gap Between Cap and Base

TABLE 2 - Connection Requirements Along Cap Truss Bottom Chord

Condition	Max. Wind Speed (mph)		Connection Options Along BC	Fasteners
	Nominal	Ultimate		
With 1.5" Gap (See Fig 1)	140	180	Nails into purlins installed on base truss at 24" o.c. (max)	Purlin-to-Base: 2-10d nails (ea purlin) Cap-to-purlin: 2-10d toe-nails (ea purlin)
			(3) 7"x7"x7/16" Plywood/OSB Gussets (each face)	6-6d nails per Gusset (see note 1 & 5)
			(3) LTP5 Framing Angles (one face)	8-8dx1.5 nails per LTP5 (see note 1 & 5)
No Gap (See Fig 2)	130	160	(2) LTP4 Framing Angles (one face)	12-8dx1.5 nails per LTP4 (see note 1 & 5)
	140	180	Toe-Nails @ 24" o.c.	2-10d toe-nails along BC @ 24" o.c.
			(3) 7"x7"x7/16" Plywood/OSB Gussets (each face)	6-6d nails per Gusset (see note 1& 5)
			(3) LTP4 Framing Angles (one face)	12-8dx1.5 nails per LTP4 (see note 1 & 5)

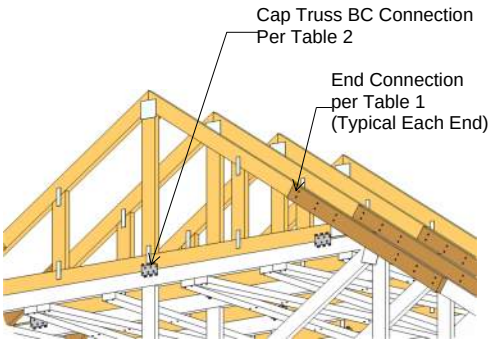

Figure 2 - Typical Piggyback Assembly with No Gap Between Cap and Base

1. Where noted, install half of the specified fasteners in each member being connected.
2. An additional end connection is not required for wind speeds up to 100 mph (nominal) and cap truss spans up to 18' if the sheathing is continuous and extends at least 12" beyond the intersection.
3. When using (2) connectors along the cap truss BC, install one at each end of the bottom chord; when using (3) connectors, install one on each end and one in the center of the bottom chord.
4. NAILS: 10d=0.148" dia.x3" long, 10dx1.5=0.148" dia.x1½" long, 8dx1.5=0.131" dia.x1½" long, 6d=0.113" dia.x2" long
5. For piggyback truss spans greater than 36' and less than or equal to 100', where there is a 1.5" gap between BC of cap truss and TC of base truss, attach BC of cap truss to the TC of base truss with 7"x7"x7/16" Plywood/OSB Gussets (each face) with 6-6d nails per gusset or LTP5 Framing Angles (one face) with 8-8dx1.5" nails per LTP5 under each vertical web at 4' on center. Where there is no gap between BC of cap truss and TC of base truss, attach BC of cap truss to the TC of base truss with 7"x7"x7/16" Plywood/OSB Gussets (each face) with 6-6d nails per gusset or LTP4 Framing Angles (one face) with 12-8dx1.5" nails per LTP4 under each vertical web at 4' on center. Note: spacing for vertical webs must not exceed 4' on center.

Bracing for the Base Truss Flat Top Chord in a Piggyback Assembly

The flat top chords of the supporting base trusses must be adequately braced to prevent them from buckling out from under the cap trusses. One option for acomplishing this is with flat 2x4 purlins in combination with diagonal bracing that gets repeated at max. 10' intervals. Other methods may be required as specified in the Construction Documents. See BCSI-B3 for additional information.

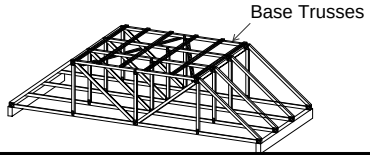

PAUL MARK BOVE
LICENSE
No. 97028
STATE OF FLORIDA
PROFESSIONAL ENGINEER

COA#30003 6/3/2026

This detail is to be used only for the application and conditions indicated herein, and its suitability for any particular truss/project shall be verified (by others). This detail is not intended to supersede any project-specific details provided in the Construction Documents. Truss configurations shown are for illustration only. Refer to the truss design drawing(s) accompanying this detail for specific truss design information. Simpson Strong-Tie Inc. is not responsible for any deviations from this design.

Simpson Strong-Tie Company

GABLE STUD BRACING DETAIL - 110 MPH (NOMINAL), 140 MPH (ULTIMATE)

TD-GBL-0004B

Date: 06/11/2014 | Rev: B | Pg. 1 of 1

NOTES:

1. This detail provides bracing/reinforcement options for the gable studs to resist the out-of-plane wind loading. Refer to the individual truss design drawing for bracing/reinforcement requirements for resisting the vertical (in-plane) loads assumed in the design of the gable end frame. Additional bracing/reinforcement at the end of the building and/or at the gable end wall may be required. Refer to the Building Designer/Construction Documents for all gable end frame and roof system bracing requirements. For additional information, see BCSI-B3.
2. This detail does not apply to structural gables.
3. Connection requirements between the gable end frame and the wall to be specified by the Building Designer.
4. The gable end frame must match the profile of the adjacent trusses. Do not use a gable end frame with a flat bottom chord next to trusses with sloped bottom chords, such as scissor or vaulted trusses.

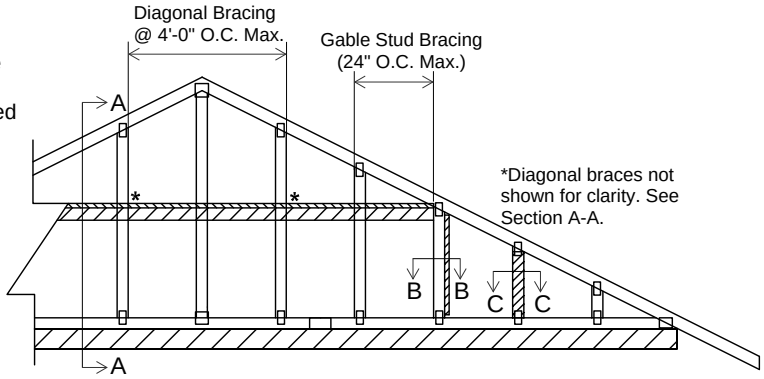

GABLE END WITH STUD BRACING/REINFORCEMENT

MINIMUM GABLE STUD SIZE, SPECIES & GRADE	MAX. GABLE STUD SPACING	WITHOUT BRACE	L-REINFORCEMENT [1]	SCAB REINFORCEMENT [1]	DIAGONAL BRACING @ MID-SPAN [2]	DIAGONAL BRACING @ 1/3 POINTS [2]
		MAXIMUM STUD LENGTH [3]				
2X4 SPF STUD or STANDARD	12" O.C.	4-6-0	7-11-4	9-0-4	9-0-4	13-6-8
	16" O.C.	4-1-0	7-0-4	8-2-4	8-2-4	12-3-8
	24" O.C.	3-5-8	5-8-12	6-11-0	6-11-0	10-4-8

DETAIL LIMITATIONS:
Max. Mean Roof Height: 30'
Category: II
Exposure: B or C
Load Duration Factor: 1.6
Wind Speed: 110 mph Nominal (140 mph Ultimate)

1. L- and Scab Reinforcements shall be minimum 2x4 stud grade and must be a minimum of 90% of the gable stud length. Fasten the reinforcement member to the gable stud with 10d nails @ 6" o.c.
2. Attach horizontal reinforcing member at mid-span (or 1/3 points as required) of the longest stud and install diagonal bracing @ 4' o.c. (max) as shown in Section A-A.
3. Tabulated maximum stud lengths are based on components and cladding wind pressures using the wind design parameters listed in the detail limitations. Gable stud deflection criteria is L/240.

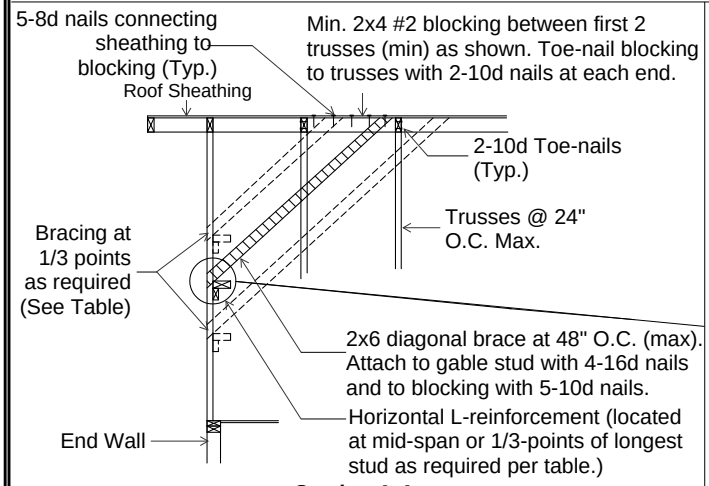

Section A-A

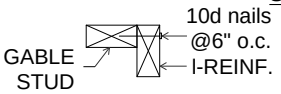

Section B-B

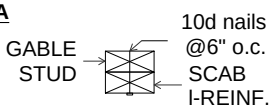

Section C-C

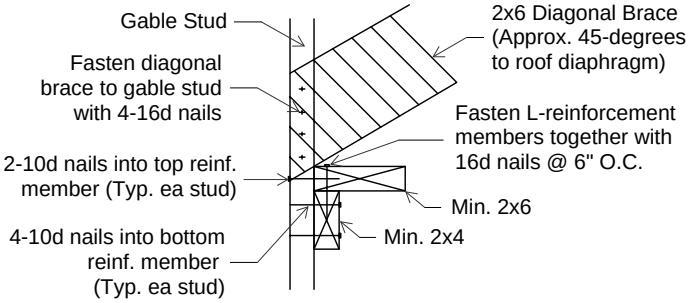

NOTE: Diagonal braces over 6'-3" require a 2x4 T-brace attached to one narrow edge. Diagonal braces over 12'-6" require 2x4s attached on both narrow edges. The braces must cover 90% of the diagonal brace and shall be fastened to the narrow edge with 10d nails at 6" o.c.(min. 3" end distance). When attached on both narrow edges, stagger the nails on each side by 3".

Nail Dimension
16d = 3.5" x 0.162"
10d = 3" x 0.148"
8d = 2.5" x 0.131"

PAUL MARK BOVE
LICENSE
No. 97028
STATE OF FLORIDA
PROFESSIONAL ENGINEER
COA#30003
6/3/2026

This detail is to be used only for the application and conditions indicated herein, and its suitability for any particular truss/project shall be verified (by others). This detail is not intended to supersede any project-specific details provided in the Construction Documents. Truss configurations shown are for illustration only. Refer to the truss design drawing(s) accompanying this detail for specific truss design information. Simpson Strong-Tie Inc. is not responsible for any deviations from this design.

Simpson Strong-Tie Company

INDIVIDUAL WEB REINFORCEMENT DETAIL

D-WEBREINFORCE

Date: 01/19/2024 | Rev: A | Pg. 1 of 1

NOTES:

1. This detail provides web reinforcement options that may be used as an alternative to continuous lateral restraint (CLR) when installing CLRs in combination with diagonal bracing is not practical or desired.
2. Refer to the truss design drawing for web lateral restraint requirements. A ⊠ on the truss design drawing indicates that continuous lateral restraint is required at the locations shown (either at the midpoint or 1/3-points of the web member). Refer to the tables below for acceptable web reinforcement options that may be used in place of one or two rows of CLR.
3. T-, L-, I- and scab web reinforcements must be the same or better species and grade of the web member as indicated on the truss design drawing.
4. All reinforcements must extend to within 6" of each end of the web member.
5. This detail does not apply to single-ply webs that exceed 14' in length.

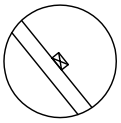

1 Row of CLR @ Web Mid-point

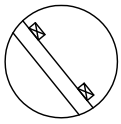

2 Rows of CLRs @ Web 1/3 points

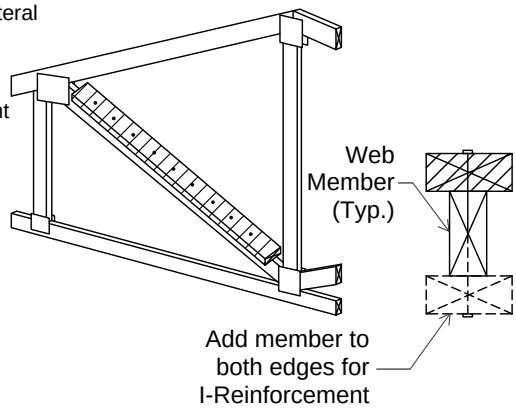

T- Reinforcement
(I-Reinforcement similar)

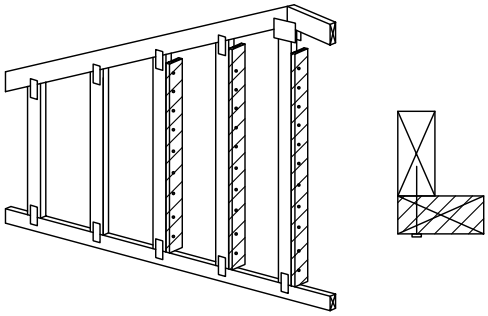

L- Reinforcement

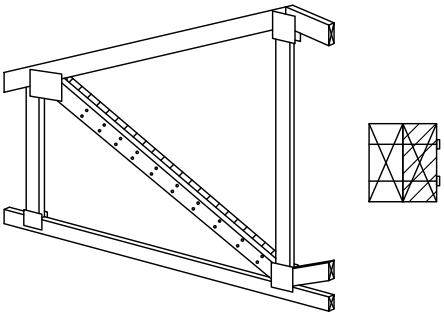

Scab Reinforcement

WEB REINFORCEMENT OPTIONS FOR SINGLE-PLY TRUSSES [1]

Specified Web Member Lateral Restraint (CLRs)	Web Member Size	Acceptable Web Reinforcement Substitutions - Type & Size				Reinforcement-to-Web Connection Requirements
		T-	L-	Scab	I-	
1 Row @ Mid-point	2x4	2x4	2x4	2x4	---	16d gun nails @ 6" on-center
	2x6	2x6	2x6	2x6	---	
	2x8	2x8	2x8	2x8	---	
2 Row @ 1/3-points	2x4	No substitutions allowed			2-2x4	
	2x6				2-2x6	
	2x8				2-2x8	

WEB REINFORCEMENT OPTIONS FOR 2-PLY TRUSSES [2]

Specified Web Member Lateral Restraint (CLRs)	Web Member Size	Acceptable Web Reinforcement Substitutions - Type & Size				Reinforcement-to-Web Connection Requirements
		T-	L-	Scab	I-	
1 Row @ Mid-point	2x4	2x4	2x4	---	---	16d gun nails @ 6" on-center
	2x6	2x6	2x6	---	---	
	2x8	2x8	2x8	---	---	
2 Row @ 1/3-points	2x4	No substitutions allowed			2-2x4	
	2x6				2-2x6	
	2x8				2-2x8	

1. The maximum allowable web length for single-ply trusses is 14'.
2. For 2-ply trusses, the reinforcement must be nailed to both plies of the web with the nailing pattern specified in the table.
3. For the scab reinforcement, 2 rows of 10d gun nails @ 6" o.c may be used in place of 16d gun nails for attaching the reinforcement to the web.
4. For I-reinforcement, attach each 2x_member to opposite edges of the web using the nailing pattern specified in the table.

Nail Dimension
16d = 3.5" x 0.131"
10d = 3" x 0.120"

PAUL MARK BOVE
LICENSE
No. 97028
STATE OF FLORIDA
PROFESSIONAL ENGINEER
COA#30003
6/3/2026

This detail is to be used only for the application and conditions indicated herein, and its suitability for any particular truss/project shall be verified (by others). This detail is not intended to supersede any project-specific details provided in the Construction Documents. Truss configurations shown are for illustration only. Refer to the truss design drawing(s) accompanying this detail for specific truss design information. Simpson Strong-Tie Inc. is not responsible for any deviations from this design.

Simpson Strong-Tie Company

LATERAL RESTRAINT & DIAGONAL BRACING DETAILS FOR WEB MEMBERS

D-WEBCLRBRACE

Date: 05/24/2021 | Rev: A | Pg. 1 of 1

This detail provides information for laterally restraining and bracing web members to prevent lateral buckling using continuous lateral restraints (CLRs) in combination with diagonal bracing. In addition to the CLRs indicated on the truss design drawing, diagonal bracing must be installed as indicated in this detail and BCSI-B3. See WEBREINFORCE for web reinforcement options that may be used as an alternative to this detail when installing CLRs and diagonal bracing is not practical or desired. Properly attached full-length sheathing satisfies (may replace) any bracing requirements specified for end vertical webs. Refer to the Construction Documents for additional bracing requirements. For trusses with spacing greater than 2' o.c. refer to BCSI-B10

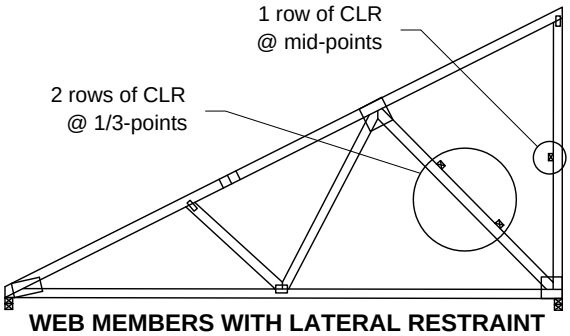

WEB MEMBERS WITH LATERAL RESTRAINT

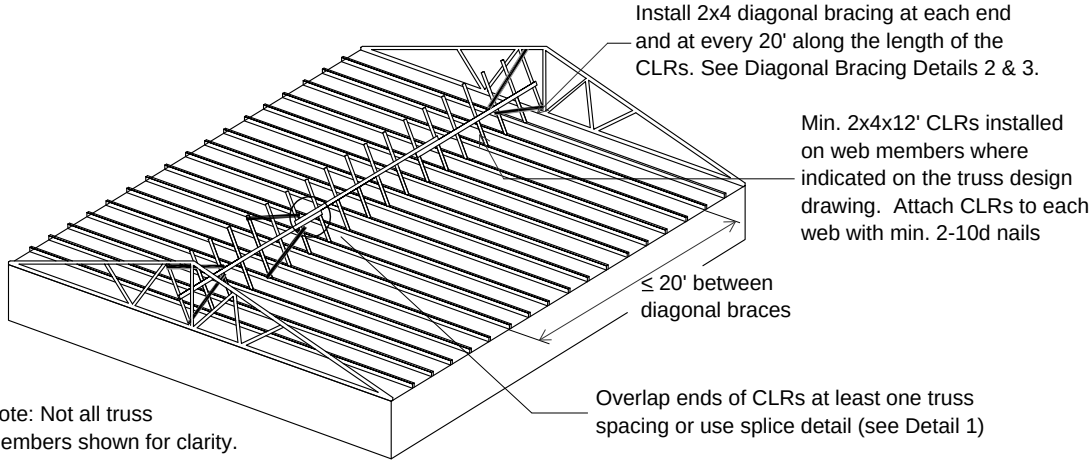

Note: Not all truss members shown for clarity.

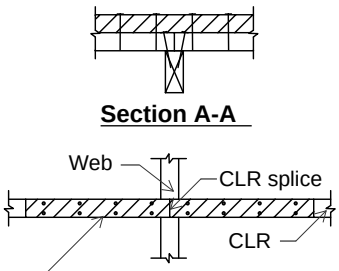

Min. 2'-long 2x_ scab block centered over the CLR splice and web. Attach to CLR with min. 8-10d nails on each side of splice.

Detail 1 - CLR Splice

For webs with one row of CLRs, diagonal bracing shall be installed using Option 2A or 2B. Attach diagonal braces to each truss with min. 2-10d nails.

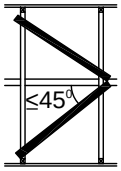

Option 2A

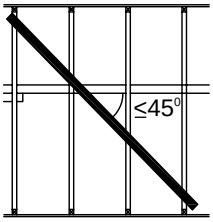

Option 2B

Detail 2 - Diagonal Bracing for 1 Row of CLRs

For webs with 2 rows of CLRs, diagonal bracing shall be installed using Option 3A or 3B. Attach diagonal braces to each truss with min. 2-10d nails.

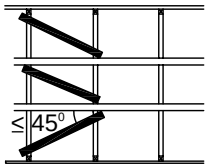

Option 3A

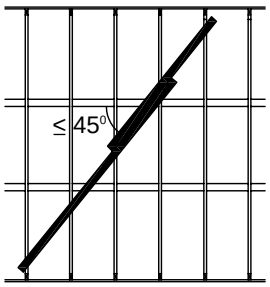

Option 3B

Detail 3 - Diagonal Bracing for 2 Rows of CLRs

DETAIL LIMITATIONS:

1. Restraint and Bracing Material min. 2x4 stress graded lumber.
2. This detail does not address permanent building stability bracing to resist lateral forces acting on the building.
3. This detail shall not supersede any project-specific truss member permanent bracing design for the roof framing structural system.
4. This detail is not applicable for trusses with spacing greater than 2' o.c.

Nail Dimensions:

10d = 3" x 0.128"

PAUL MARK BOVE
LICENSE
No. 97028
STATE OF FLORIDA
PROFESSIONAL ENGINEER

COA#30003 6/3/2026

This detail is to be used only for the application and conditions indicated herein, and its suitability for any particular truss/project shall be verified (by others). This detail is not intended to supersede any project-specific details provided in the Construction Documents. Truss configurations shown are for illustration only. Refer to the truss design drawing(s) accompanying this detail for specific truss design information. Simpson Strong-Tie Inc. is not responsible for any deviations from this design.

Simpson Strong-Tie Company