ELECTRICAL SYMBOL LEGEND (NOT ALL SYMBOLS USED)

1

WIRING AND WIRING DEVICES

WIRING SYSTEM CONCEALED IN WALL OR CEILING. DASHED LINES INDICATE WIRING RUN BELOW SLAB / GRADE.

LOW VOLTAGE CONTROL WIRING SYSTEM CONCEALED IN WALL OR CEILING.

WIRING SYSTEM TO BE RUN EXPOSED. DASHED LINES INDICATE WIRING RUN BELOW SLAB / GRADE.

BRANCH CIRCUIT HOMERUN TO PANEL. NUMBER OF ARROWHEADS INDICATE NUMBER OF CIRCUITS. THREE CIRCUITS OF ALTERNATING PHASES MAY BE COMBINED IN ONE CONDUIT, HOWEVER THEY SHALL EITHER BE EQUIPPED w/ DEDICATED NEUTRALS, COMMON TRIP CIRCUIT BREAKERS, OR HANDLE-TIES ON THEIR BREAKERS.

MOTOR PROVIDED AND INSTALLED BY MECH. CONTRACTOR, WIRED BY ELEC. CONTRACTOR, NUMERALS INDICATE HORSEPOWER.

JUNCTION BOX, CEILING AND WALL MOUNTED.
- 'P' INDICATES SYSTEMS FURNITURE POWER WHIP, SEE DETAILS.
- 'C' INDICATES SYSTEMS FURNITURE COMMUNICATIONS WHIP, SEE DETAILS.

SINGLE SERVICE FLOORBOX / POKE-THROUGH, JUNCTION BOX.
- ON-GRADE: HUBBELL B2536 SERIES BOX OR APPROVED EQUAL, UON.
- ABOVE GRADE: HUBBELL S1PT4X4-J BOX SERIES OR APPROVED EQUAL, UON.
- 'P' INDICATES SYSTEMS FURNITURE POWER WHIP, SEE DETAILS.
- 'C' INDICATES SYSTEMS FURNITURE COMMUNICATIONS WHIP, SEE DETAILS.

FIRE ALARM DEVICES

- 'C' INDICATES CEILING MOUNTED.

CO — CARBON MONOXIDE DETECTOR WALL OR CEILING MTD.
H — HEAT DETECTOR WALL OR CEILING MOUNTED.
S — SMOKE DETECTOR WALL OR CEILING MOUNTED.
S — SMOKE DETECTOR DUCT MOUNTED.
FACP — FIRE ALARM CONTROL PANEL.
FAAP — FIRE ALARM ANNUNCIATOR PANEL.
NAC — FIRE ALARM NOTIFICATION APPLIANCE CABINET.
ERRCS — EMERGENCY RESPONDER RADIO COVERAGE SYSTEM.
DH — DOOR HOLDER INTERFACE DEVICE.
IM — INPUT MODULE INTERFACE DEVICE.
R — RELAY INTERFACE DEVICE.
FS — FIRE ALARM FLOW SWITCH.
PS — FIRE ALARM PRESSURE SWITCH.
TS — FIRE ALARM TAMPER SWITCH.
PT — FIRE ALARM PULL STATION.
LF — LOW FREQUENCY ALARM DEVICE.
VISUAL ONLY ALARM DEVICE.
V — VISUAL / AUDIBLE ALARM DEVICE.
BELL ALARM DEVICE.
SPEAKER ALARM DEVICE.
S — SPEAKER / STROBE ALARM DEVICE.
CO — SINGLE STATION CARBON MONOXIDE ALARM.
H — SINGLE STATION HEAT ALARM.
S — SINGLE STATION SMOKE ALARM.
D — SINGLE STATION DUCT SMOKE ALARM.
A — SINGLE STATION DUCT SMOKE REMOTE ALARM.

SITE

BOLLARD LIGHT FIXTURE.

GROUND MOUNTED FLOODLIGHT FIXTURE.

GROUND MOUNTED LINEAR SIGNLIGHT FIXTURE.

POST TOP LIGHT FIXTURE.

POLE MOUNTED SITE LIGHT FIXTURE (1 HEAD).

POLE MOUNTED SITE LIGHT FIXTURE (2 HEAD).

LIGHTNING PROTECTION

LIGHTNING PROTECTION AIR TERMINAL.

LIGHTNING PROTECTION DOWN CONDUCTOR AND GROUND ROD.

LIGHTNING PROTECTION CONDUCTOR.

RECEPTACLES

ALL RECEPTACLES SHALL BE A MINIMUM RATING OF 120 VOLT, 20 AMP, UON. VERTICAL MOUNTED BOX HEIGHTS SHALL BE TO CENTER, HORIZONTAL MOUNTED BOX HEIGHTS SHALL BE TO TOP, UON.
- 'AFI' INDICATES ARC FAULT CIRCUIT INTERRUPTER.
- 'GFI' INDICATES GROUND FAULT CIRCUIT INTERRUPTER.
- 'WP' INDICATES WEATHERPROOF IN USE, WEATHER RESISTANT RECEPTACLE w/ IN-USE EXTRA DUTY COVER. RECEPTACLES LOCATED IN WET OR DAMP LOCATIONS SHALL BE WP, WHETHER INDICATED OR NOT.
- 'EWC' INDICATES ELECTRIC WATER COOLER.
- 'EX' INDICATES EXISTING TO BE REUSED.
- 'HD' INDICATES HAND DRYER CONNECTION.
- 'TR' INDICATES TAMPER RESISTANT (INTEGRAL TO RECEPTACLE). ALL DWELLING UNIT DUPLEX RECEPTACLES SHALL BE LISTED TAMPER RESISTANT TYPE. ALL NON-LOCKING, 120V, 15A AND 20A RECEPTACLES SHALL BE TAMPER RESISTANT, EXCEPT IN MECHANICAL ROOMS, ELECTRICAL ROOMS, AND JANITORS CLOSETS, WHETHER INDICATED OR NOT.
- 'CH' INDICATES HALF CONTROLLED.
- 'CF' INDICATES FULL CONTROLLED (BOTH PLUGS OF DUPLEX).
- 'AC' MOUNT ABOVE COUNTER.
- 'USB' INDICATES 20A 125V TAMPER RESISTANCE RECPTACLE AND USBA+C FAST CHARGING.
  SHADING:
- CENTER SHADING INDICATES DEVICE MOUNTED ABOVE COUNTER TOP 3'-8" AFF, UON.
- 1/2 SHADING INDICATES DEVICE TO BE SWITCHED.

SIMPLEX RECEPTACLE, CEILING, FLOOR AND WALL MOUNTED.

DUPLEX RECEPTACLE, CEILING, FLOOR AND WALL MOUNTED. FLOOR IS SINGLE SERVICE FLOORBOX / POKE-THROUGH, ONE DUPLEX RECEPTACLE.
- ON-GRADE: HUBBELL B2536 SERIES BOX OR APPROVED EQUAL, UON.
- ABOVE GRADE: HUBBELL S1PT4X4-J SERIES BOX OR APPROVED EQUAL, UON.

DOUBLE DUPLEX RECEPTACLE, CEILING, FLOOR AND WALL MOUNTED.

220V RECEPTACLE, CEILING, FLOOR AND WALL MOUNTED.
- 'DRYER' INDICATES NEMA 14-30R.

SPECIAL RECEPTACLE (AS INDICATED), CEILING, FLOOR AND WALL MOUNTED.

MULTI-OUTLET ASSEMBLY.

MISCELLANEOUS DEVICES

FSD — 120V FIRE / SMOKE DAMPER (FURNISHED & INSTALLED BY DIV 23, CIRCUITED BY DIV 26).

SD — 120V SMOKE DAMPER (FURNISHED & INSTALLED BY DIV 23, CIRCUITED BY DIV 26).

M — 120V MOTORIZED DAMPER (FURNISHED & INSTALLED BY DIV 23, CIRCUITED BY DIV 26).

ER — EMERGENCY RELAY.

PB — PUSHBUTTON

COMMUNICATIONS

OUTLETS SHALL BE MOUNTED AT SAME HEIGHT AS ADJACENT RECEPTACLE, w/ CONDUIT STUBBED OUT ABOVE ACCESSIBLE CEILING.
- 'W' INDICATES 48" AFF MOUNTING.
- 'INT' INDICATES INTERCOM OUTLET.

TELEPHONE OUTLET w/ 3/4"C, CEILING, FLOOR AND WALL MOUNTED.

DATA OUTLET w/ 1"C, CEILING, FLOOR AND WALL MOUNTED.

COMBINATION TEL / DATA OUTLET w/ 1"C, CEILING, FLOOR AND WALL MOUNTED.

TV — WALL MOUNTED TV OUTLET w/ 1"C, UON, SEE ARCH PLANS FOR MOUNTING HEIGHT.

RECEPTACLE (SIMPLEX, DUPLEX, DOUBLE DUPLEX, 220V OR SPECIAL), COMBINATION TEL/DATA OUTLET w/ 1"C, AND INTERCOM OUTLET IN FLOOR / WALL BOX, WIREMOLD FB-SERIES OR APPROVED EQUAL, UON.

GAP — GENERATOR ANNUNCIATOR PANEL.

SP, ISP — SPEAKER CEILING AND WALL MOUNTED.

DS — DISCONNECT SWITCH FOR NOTIFICATION.

DB — DOOR BELL PUSH BUTTON.

TX — LOW VOLTAGE TRANSFORMER.

VM — VISUAL / AUDIBLE DOOR NOTIFICATION.

IC — INTERCOMM.

VC — VOLUME CONTROL.

GB — GROUND BAR.

WAP — WIRELESS ACCESS POINT.

DATA PATCH PANEL.

SWITCHING

20A, 120/277 VOLT, +48" AFF TO TOP, UON.
- '2' INDICATES 2-POLE.
- '3' INDICATES 3-WAY.
- '4' INDICATES 4-WAY.
- 'D' INDICATES 0-10V DIMMER SWITCH. COORDINATE EXACT TYPE AND RATING w/ LIGHTING CONTROLLED.
- 'T' INDICATES 0-60 MINUTE TIMER SWITCH.
- 'K' INDICATES KEY OPERATED SWITCH.
- 'LV' INDICATES LOW VOLTAGE SWITCH.
- 'LVX' INDICATES 2-RELAY LOW VOLTAGE SWITCH.
- '[#]' INDICATES LIGHTING CONTROL ZONE. SEE LIGHTING CONTROL SCHEDULE FOR DETAILS.

$ — SINGLE POLE SWITCH.

$VS — LINE VOLTAGE, VACANCY SENSOR SWITCH, MANUAL-ON / AUTO-OFF, DUAL-TECHNOLOGY, PROVIDE COMPLETE ROOM COVERAGE.

$OC — LINE VOLTAGE, OCCUPANCY SENSOR SWITCH, AUTO-ON / AUTO-OFF, DUAL-TECHNOLOGY, PROVIDE COMPLETE ROOM COVERAGE.

$OCD — LINE VOLTAGE, OCCUPANCY SENSOR SWITCH w/ DIMMING, AUTO-ON / AUTO-OFF, DUAL-TECHNOLOGY, PROVIDE COMPLETE ROOM COVERAGE.

$OCLV — LOW VOLTAGE, OCCUPANCY SENSOR SWITCH, AUTO-ON / AUTO-OFF, DUAL-TECHNOLOGY, PROVIDE COMPLETE ROOM COVERAGE.

PP, PP2 — LOW-VOLTAGE CONCEALED POWER PACK FOR OCCUPANCY SENSOR.

PPA, PPA2 — LOW-VOLTAGE CONCEALED POWER PACK FOR OCCUPANCY SENSOR, AUTO-ON / AUTO-OFF.

PPM, PPM2 — LOW-VOLTAGE CONCEALED POWER PACK FOR OCCUPANCY SENSOR, MANUAL-ON / AUTO-OFF.

PPD, PPD2 — LOW-VOLTAGE CONCEALED POWER PACK FOR OCCUPANCY SENSOR, MANUAL-ON / AUTO-OFF, 0-10V DIMMING.

VS, VSX — LOW-VOLTAGE DUAL-TECHNOLOGY VACANCY SENSOR, CEILING AND WALL MOUNTED, MANUAL-ON / AUTO-OFF w/ EXTENDED RANGE (AT LEAST 56'-0" MINOR MOTION RANGE DIAMETER AT 9'-0" AFF MOUNTING HEIGHT).

OC, OCX — LOW-VOLTAGE DUAL-TECHNOLOGY OCCUPANCY SENSOR, CEILING AND WALL MOUNTED, AUTO-ON / AUTO-OFF w/ EXTENDED RANGE (AT LEAST 56'-0" MINOR MOTION RANGE DIAMETER AT 9'-0" AFF MOUNTING HEIGHT).

PC — NORTH FACING ROOF MOUNTED PHOTOCELL.

TC — TIMECLOCK, REFER TO LIGHTING CONTROL DIAGRAM.

IV — INVERTER, 50W, 277V, 90 MINUTE BATTERY.

LIGHTING FIXTURES

SEE FIXTURE SCHEDULE FOR DETAILS.
- 'NL' INDICATES FIXTURE UNSWITCHED (NITE LIGHT).
- LOWER CASE LETTERING DENOTES SWITCH / RELAY CONTROLLING THE FIXTURE.

SHADING:
- 1/2 SHADING INDICATES FIXTURE TO BE PROVIDED w/ 90-MINUTE, MINIMUM BATTERY BACKUP.

DOWNLIGHT RECESSED FIXTURE, ARROW INDICATES WALL WASH TYPE AND DIRECTION TO AIM FIXTURE.

DOWNLIGHT SURFACE MOUNTED FIXTURE.

EMERGENCY EGRESS LIGHT FIXTURE.

EXIT SIGN FIXTURE, CEILING AND WALL MOUNTED. SHADING INDICATES ILLUMINATED FACE, ARROWS INDICATE CHEVRONS.

CEILING FAN.

LINEAR PENDANT FIXTURE.

2' x 4' LIGHTING FIXTURE. DIAGONAL INDICATES FIXTURE UNSWITCHED (NITE LIGHT).

2' x 2' LIGHTING FIXTURE.

ROUND BOWL / DRUM PENDANT FIXTURE.

4' STRIP FIXTURE.

SURFACE FIXTURE.

WALL MOUNTED LIGHT FIXTURE.

TRACK LIGHT FIXTURE.

STEP LIGHT FIXTURE.

DISTRIBUTION DEVICES

- DASHED LINES ADJACET TO EQUIPMENT INDICATES CLEARANCES.

HEAVY DUTY DISCONNECT SWITCH. PROVIDE NEMA 3R ENCLOSURES FOR EXTERIOR DISCONNECTS.
- NUMBERS INDICATE AMP FRAME / # POLES / AMP FUSE.
- 'NF' INDICATES NON-FUSIBLE.

30/3/20 — 120 / 208V PANELBOARD, SURFACE OR RECESS MOUNTED. SEE SCHEDULE FOR DETAILS.

277 / 480V PANELBOARD, SURFACE OR RECESS MOUNTED. SEE SCHEDULE FOR DETAILS.

T — TRANSFORMER.

SWITCHBOARD, SEE SCHEDULE FOR DETAILS.

SPD — SURGE PROTECTIVE DEVICE.

UTILITY METER

ENCLOSED CIRCUIT BREAKER

SECURITY INFRASTRUCTURE

ALL CONDUITS INDICATED BELOW SHALL BE ROUTED TO THE SECURITY PANEL IN THE COMM ROOM. COORDINATE w/ SECURITY INSTALLER FOR LOCATION OF SECURITY PANEL.

CCTV — CCTV CAMERA.
ACP — ACCESS CONTROL PANEL.
CR — CARD READER, OUTLET BOX AT 3'-10" AFF.
DC — DOOR CONTACT.
ML — MAGNETIC LOCK.
PB — PUSH BUTTON, OUTLET BOX AT 3'-10" AFF.
GC — GATE CONTACT.
REX — REQUEST TO EXIT.
ES — ELECTRIC STRIKE.
MS — MOTION SENSOR.
GB — GLASS BREAK SENSOR.

1

GENERAL SYMBOLS

	PLAN OR DETAIL NO. / SHEET NUMBER
1	KEYED NOTE TO PLAN
1	REVISION NUMBER
N	NORTH ARROW

Columbia County Building Department — Plans Reviewed for Code Compliance — State of Florida

1 ALL DESIGN PRIOR TO 08/28/2025 WAS PERFORMED BY IMEG UNDER THE RESPONSIBLE CHARGE OF THOMAS C. NIELSEN, PE #53492. ALL SUBSEQUENT DESIGN BY IMEG IS UNDER THE RESPONSIBLE CHARGE OF BRIAN J. LEAVITT, PE #87733.

kasper architects + assoc.
10175 Fortune Parkway, Suite 701
Jacksonville, FL 32256
p 904.683.9201 f 904.683.9702
www.kasperarch.com
FL License No.: AA26000802

IMEG
formerly McVeigh & Mangum Engineering
www.IMEGCorp.com
9133 R.G. Skinner Parkway
Jacksonville, Florida 32256
Ph: (904) 493-5200 Fax: (904) 636-6700
email: mail@McVeighMangum.com
CA 6330
Eng. of Record: Thomas C. Nielsen
License No.: 53492

BRIAN JOSEPH LEAVITT — LICENSE No. 87733 — STATE OF FLORIDA — PROFESSIONAL ENGINEER

Digitally signed by Brian Leavitt
Reason: This item has been electronically signed and sealed by Brian J. Leavitt PE using a Digital Signature and sealed. Printed copies of this document are not considered signed and sealed and the signature must be verified on any electronic copies
Date: 2025.08.28 14:50:56-05'00'

Brian Leavitt

BUSY BEE ELLISVILLE

136 SW WEBBS GLN
LAKE CITY, FL 32024

PROJECT NO.:	22024
DATE:	06/02/2025
PRIOR ISSUES:	
1	08/24/2025 ASI #1

LEGEND AND GENERAL NOTES

E0.1a

DRAWN BY:	IMEG
CHECKED BY:	IMEG

100% CONSTRUCTION DOCUMENTS

© 2013

ALL REPORTS, SPECIFICATIONS, COMPUTER FILES, FIELD DATA, AND OTHER DOCUMENTATION PREPARED BY KASPER ARCHITECTURE & DEVELOPMENT, INC. (KAD) AS INSTRUMENTS OF SERVICE SHALL REMAIN THE PROPERTY OF KAD. KAD SHALL RETAIN ALL COMMON LAW, STATUTORY AND OTHER RESERVED RIGHTS, INCLUDING THE COPYRIGHT THERETO. THIS DRAWING SHALL NEVER BE REPRODUCED IN WHOLE OR IN PART WITHOUT THE EXPRESS WRITTEN PERMISSION OF KAD

ALL REPORTS, SPECIFICATIONS, COMPUTER FILES, FIELD DATA, AND OTHER DOCUMENTATION PREPARED BY KASPER ARCHITECTURE & DEVELOPMENT, INC. (KAD) AS INSTRUMENTS OF SERVICE SHALL REMAIN THE PROPERTY OF KAD. KAD SHALL RETAIN ALL COMMON LAW, STATUTORY AND OTHER RESERVED RIGHTS, INCLUDING THE COPYRIGHT THERETO. THIS DRAWING SHALL NEVER BE REPRODUCED IN WHOLE OR IN PART WITHOUT THE EXPRESS WRITTEN PERMISSION OF KAD

ELECTRICAL GENERAL NOTES

1 CONTRACTOR SHALL BE LICENSED BY THE STATE OF FLORIDA ACCORDING TO CHAPTER 489, FLORIDA STATUTES AND SHALL PROVIDE FOR AND ACQUIRE ALL NECESSARY PERMIT(S) AND INSPECTIONS AS MAY BE REQUIRED BY THE AHJ.
2 INSTALLATION SHALL MEET OR EXCEED THE MINIMUM REQUIREMENTS OF THE APPLICABLE CODES AS ADOPTED BY THE JURISDICATION.
3 THE CONTRACTOR SHALL FURNISH ALL MATERIALS AND LABOR NECESSARY TO PROVIDE FOR THE INSTALLATION OF A COMPLETE ELECTRICAL SYSTEM.
4 THE CONTRACTOR SHALL MAKE A THOROUGH EXAMINATION OF THE SITE CONDITIONS AND CONTRACT DOCUMENTS.
5 THE CONTRACTOR SHALL COORDINATE METERING, TRANSFORMER AND SERVICE CONNECTION REQUIREMENTS WITH THE APPROPRIATE UTILITIES.
6 PROVIDE ANY AND ALL NECESSARY TEMPORARY CONNECTIONS OF EQUIPMENT, DEVICES OR LUMINAIRES AS MAY BE REQUIRED FOR CONSTRUCTION.
7 CONDUIT SHALL BE INSTALLED CONCEALED, RECESSED AND IN A NEAT AND WORKMANLIKE MANNER. ALL CONDUIT SHALL BE INSTALLED PARALLEL OR PERPENDICULAR TO BUILDING LINES. EXPOSED CONDUIT ON EXTERIOR WALLS OF FINISHED WALLS IS PROHIBITED.
8 CONDUIT SHALL BE EMT AND FITTINGS SHALL BE STEEL. FOR UNDERGROUND AND UNDER SLAB INSTALLATIONS, CONDUIT SHALL BE PVC OR IMC W/AN ASPHALTIC COATING. ENT OR "SMURF "TUBING IS NOT APPROVED.
9 EACH PANEL BOARD AND DISCONNECTING MEANS SHALL BE MARKED TO INDICATE ITS PURPOSE, FEED, AND OF SUFFICIENT DURABILITY TO WITHSTAND THE ENVIRONMENT INVOLVED
10 SEAL ALL CONDUITS WHERE THE CONDUIT CONNECTS AN INTERIOR CONDUIT BODY TO AN EXTERIOR CONDUIT BODY OR LUMINAIRE.
11 PROVIDE A MINIMUM 1 1/2" SPACE BETWEEN METAL CORRUGATED SHEET ROOF DECKING AND ANY CABLE, CONDUCT OR BOX PER NEC 300.4(E).
12 UNDERGROUND PVC CONDUIT SHALL BE A LEAST 12' UNDER SIDEWALKS, 24" UNDER PARKING LOTS & DRIVEWAYS AND 18" IN ALL OTHER LOCATIONS PER NEC 300.5.
13 PROVIDE SUFFICIENT SPACING BETWEEN CONDUITS TO ALLOW APPROPRIATE COMPACTION AND HEAT DISSIPATION.
14 ALL UNDERGROUND CONDUITS AND CONDUCTORS SHALL BE MARKED WITH A DETECTABLE WARNING RIBBON AT LEAST 12" ABOVE THE CONDUIT OR CONDUCTOR PER NEC 300.5(D)(3).
15 CONDUCTORS IN CONDUIT INSTALLED EXPOSED TO DIRECT SUNLIGHT SHOULD BE DE-RATED DEPENDING ON THE DISTANCE BETWEEN THE ROOF & BOTTOM OF CONDUIT PER NEC 310.15(B)2 & SHOULD BE INSTALLED USING THE APPROPRIATE SPACER.
16 PROVIDE AN INDEPENDENT MEANS OF SUPPORT FOR CONDUIT INSTALLED ABOVE A CEILING WHERE THE SUPPORTS ARE DISTINGUISHABLE BY COLOR, TAGGING OR OTHER EFFECTIVE MEANS. THE CEILING SUPPORT SYSTEM SHALL BE PERMITTED TO SUPPORT BRANCH CIRCUIT WIRING WHERE INSTALLED IN ACCORDANCE WITH THE CEILING MANUFACTURER'S INSTRUCTIONS.
17 PROVIDE AN INSULATED THROAT FITTING OR PLASTIC BUSHING FOR ALL 1" & LARGER CONDUIT TERMINATIONS IN PANELBOARDS, WIREWAYS AND DISCONNECT SWITCHES.
18 PROVIDE GROUNDING BUSHINGS FOR ANY CONDUIT TERMINATIONS AT ECCENTRIC AND CONCENTRIC KNOCKOUTS IN DISCONNECTS, PANELBOARDS & LOADCENTERS OR WHEN REDUCING WASHERS ARE USED.
19 BOND ALL JUNCTION AND PULL BOXES TO GROUND.
20 ALL WIRE SHALL BE COPPER THHN, THWN OR XHHW UON. MINIMUM WIRE SIZE IS #12. AMPACITIES ARE CALCULATED USING THE 75°C COLUMN. SERIES 8000 COMPACT ALUMINUM CONDUCTORS OF EQUIVALENT OR GREATER AMPACITY TO THE COPPER CONDUCTORS SCHEDULED SCHEDULED MAY BE USED FOR LOADS OVER 100A.
21 REFER TO CONDUCTOR VOLTAGE DROP SUMMARY ON SHEET E0.5 FOR MAXIMUM LENGTHS OF CONDUCTORS.
22 ALL WIRING DEVICES SHALL BE TERMINATED AT THE SCREW IN A CLOCKWISE DIRECTION. THE PUSH-IN TERMINATIONS SHALL NOT BE USED.
23 VOLTAGE DROP SHALL NOT EXCEED 5% FOR EACH END DEVICE FROM THE TRANSFORMER AND INCLUDE ALL BRANCH AND FEEDER CIRCUITS.
24 MOTOR STARTING SWITCHES MAY BE ELIMINATED AT DUCT HEATERS AND VAV BOXES IF A DISCONNECTING MEANS HAS BEEN PROVIDED WITH THE EQUIPMENT.
25 INSTALL A FULL SIZE NEUTRAL TO ALL DEVICES INCLUDING SWITCHES.
26 TERMINATE NO MORE THAN ONE WIRE PER TERMINAL PER NEC 110.14A.
27 CONDUCTORS SHALL BE TWISTED TOGETHER PRIOR TO INSTALLATION OF WIRE NUT.
28 REFER TO DATA/COMM DETAIL FOR EXTENT OF INSTALLATION REQUIRED.
29 ALL BOXES SHALL BE A 4" SQUARE METAL BOX WITH THE APPROPRIATE RING. THE MAXIMUM GAP AROUND ANY RECESSED BOX SHALL NOT EXCEED 1/8' AND THE MAXIMUM SETBACK SHALL NOT EXCEED 1/4" PER NEC 314.20 & 314.21.
30 VERIFY DOOR SWINGS AND BACK SPLASH HEIGHTS AT ROUGH IN.
31 STAGGER BACK TO BACK WALL BOXES IN ALL WALLS BY AT LEAST ONE STUD.
32 ALL CONDUIT CUT ENDS SHALL BE REAMED PER NEC 358.28
33 ALL EXTERIOR RECEPTACLES SHALL BE WEATHER RESISTANT PER NEC 406(D)6.
34 AT ROUGH IN, INSTALL ARLINGTON "IN BOX" WHERE AN IN USE COVER IS REQUIRED.
35 PROVIDE IN USE COVERS FOR ELECTRICAL DEVICES INSTALLED IN DAMP AND WET AREAS WITH THE APPROPRIATE DUTY PER NEC 406.9.
36 ALL PANEL BOARD BUS SHALL BE COPPER.
37 WHEN AVAILABLE, ALL BREAKERS SHALL BE THE BOLT ON TYPE.
38 PROVIDE A TYPED PANEL SCHEDULE REFLECTING INSTALLED CONDITIONS FOR ALL PANELBOARDS WITH "SPACE" OR "SPARE" WRITTEN IN PENCIL.
39 INSTALL PANELS AND DISCONNECTS SO THAT AT LEAST 3½ FEET OF WORKING SPACE CAN BE MAINTAINED PER NEC 110.26.
40 ELECTRICAL EQUIPMENT SUPPORT WIRES SHALL BE TAUT & FASTENED AT BOTH ENDS.
41 "TYPICAL" NOTES APPLY TO ALL SIMILAR SITUATIONS.
42 PROVIDE A DISCONNECTING MEANS FOR EACH WATER HEATER PER FPC 504.3.
43 LABEL ALL JUNCTION BOX COVERS WITH CIRCUITS DESIGNATION CONTAINED WITHIN.
44 PROVIDE OPERATING AND INSTALLATION INSTRUCTIONS TO THE OWNER FOR ALL INSTALLED EQUIPMENT.
45 AN FS BOX IS NOT APPROVED AS A SUPPORT FOR A LUMINAIRE.
46 LUMINAIRES INSTALLED IN SUSPENDED CEILINGS SHALL BE FASTENED TO THE CEILING FRAMING MEMBERS WITH LISTED CLIPS IN ACCORDANCE WITH NEC 410.36(B).
47 PROVIDE THE APPROPRIATE FIRE STOP SYSTEM AND/OR FIRE CAULK AT ANY PENETRATION OF A RATED VERTICAL ASSEMBLY.
48 PENETRATIONS OF A RATED HORIZONTAL ASSEMBLY WITH A METAL CONDUIT NOT EXCEEDING 6 INCH NOMINAL DIAMETER, INSTALL CONCRETE, GROUT, OR MORTAR THE FULL THICKNESS OF THE FLOOR AS REQUIRED BY FBC 713.4.1.1 SO TO MAINTAIN THE FIRE RESISTANCE RATING. FOR MULTIPLE PENETRATIONS, REFER TO THE FBC.
49 ALL JUNCTION BOXES ARE TO BE ACCESSIBLE PER NEC ARTICLE 100.
50 NOT ALL ITEMS, NOTES, DETAILS, ABBREVIATIONS, SCHEDULES AND LEGENDS ON THIS SHEET MAY BE APPLICABLE TO THIS PROJECT.
51 CONDUIT TERMINATION AT NEMA 3R ENCLOSURES SHALL BE WITH A MYERS HUBS FOR TOP PENETRATIONS AND LIQUID TIGHT SEALING RINGS OR SEALING LOCKNUTS FOR SIDE PENETRATIONS.
52 INSTALL ALL PLATES SO EDGES ARE FLUSH WITH WALL SURFACE.
53 FOR ALL LED LUMINAIRES, MARK EACH FIXTURE WITH TAG #, MANUFACTURER, MODEL NUMBER, INSTALLATION DATE, INSTALLING CONTRACTOR AND LENGTH OF WARRANTY.
54 PROVIDE AND INSTALL ALL NECESSARY JUNCTION BOXES, SHOWN AND NOT SHOWN, THAT MAY BE REQUIRED FOR A COMPLETE AND ACCESSIBLE CODE COMPLIANT INSTALLATION.
55 RECEPTACLES INSTALLED WITHIN 6' OF WATER SOURCE SHALL BE GFCI PROTECTED IRREGARDLESS OF PLAN DESIGNATION. COORDINATE INSTALLATION OF RECEPTACLES SHOWN ADJACENT TO MILLWORK WITH ARCHITECTURAL ELEVATIONS SO THEY ARE ACCESSIBLE.LOCATIONS SHOWN ON PLAN ARE DIAGRAMMATIC.
56 INSTALL A BOX AND SUPPORT FOR A 70LB DYNAMIC LOAD AT ALL CEILING FANS AND LOCATIONS WHERE A FAN MIGHT BE INSTALLED IN THE FUTURE.
57 WHERE A LUMINAIRE IS INSTALLED MOUNTED TO A BOX, INSTALL A BOX AND SUPPORT RATED FOR A 50LB STATIC LOAD. SUCH LUMINAIRES INCLUDE BUT ARE NOT LIMITED TO EXIT LIGHTS, EGRESS LIGHTING, WALL PACS & WALL MOUNTED STRIPS
58 WHERE A CONDUCTOR IS TOO LARGE TO TERMINATE TO A BREAKER OR DISCONNECT, PROVIDE AND INSTALL A STEP DOWN COMPRESSION ADAPTOR OR COUPLER REDUCER.
59 WHERE THREADS ARE FIELD CUT, COAT THE THREADS WITH AN APPROVED CORROSION RESISTANT ELECTRICALLY CONDUCTIVE COMPOUND PER NEC 300.6(A).
60 WHERE A TWO POLE OCCUPANCY SENSOR OR MULTIPLE SWITCHES ARE INSTALLED, THE BUTTON OR SWITCH CLOSEST TO THE DOOR SHALL OPERATE THE LIGHT OF THE ROOM BEING ENTERED.

ELECTRICAL GENERAL NOTES (CONT)

61 WALL LUMINAIRES SHALL BE INSTALLED AFTER WALL FINISHES HAVE BEEN APPLIED.
62 STRUT INSTALLED ABOVE MULTIPLE PANELBOARDS SHALL BE CONTINUOUS IN LIEU OF MULTIPLE SHORT PIECES.
63 PROVIDE HACR BREAKERS FOR ALL HVAC EQUIPMENT.
64 PROVIDE GFCI BREAKERS FOR DRINKING FOUNTAINS.
65 PROVIDE DUAL FUNCTION, GFCI/AFCI BREAKERS FOR DISHWASHERS.
66 PROVIDE AFCI BREAKERS FOR ALL RESIDENTIAL AREAS EXCEPT RESTROOMS AND EXTERIOR USES AS REQUIRED BY NEC 210.12.
67 PROVIDE AS BUILT DRAWINGS AND A COPY OF APPROVED SHOP DRAWINGS UPON COMPLETION PER FLORIDA ENERGY CODE C408.3.2.
68 INSTALL LUMINAIRES WITH BATTERY TEST SWITCHES WITH THE TEST BUTTON DOWN.
69 INSTALL EXIT LIGHTS WITH 2" BETWEEN THE BOTTOM OF THE EXIT AND THE DOOR JAMB, UNO.
70 PROVIDE BLANK PLATES FOR ALL UNUSED BOXES.
71 WHERE THE ELECTRICAL PLANS SHOW THE CONNECTION OF AN EXHAUST HOOD, ADDITIONAL DIRECTION OF WORK TO BE COMPLETED BY THE ELECTRICAL CONTRACTOR WILL BE FOUND IN THE MECHANICAL CONSTRUCTION DOCUMENTS AND SHALL BE PART OF THE BASE BID.
72 THE CONSTRUCTION AND INSTALLATION OF THE PRIMARY ELECTRIC CONDUIT, TRANSFORMER, TRANSFORMER PAD AND METERING ARE SHOWN DIAGRAMMATIC. THE DIRECTION SET FORTH BY THE LOCAL ELECTRIC UTILITY IN ITS DESIGN MANUALS AND SPECFICIATIONS IS APPLICABLE AND BECOMES PART OF THESE CONSTRUCTION DOCUMENTS.

kasper architects + assoc.
10175 Fortune Parkway, Suite 701
Jacksonville, FL 32256
p 904.683.9201 f 904.683.9702
www.kasperarch.com
FL License No.: AA26000802

IMEG
formerly McVeigh & Mangum Engineering
www.IMEGCorp.com
9133 R.G. Skinner Parkway
Jacksonville, Florida 32256
Ph: (904) 483-5200 Fax: (904) 636-6700
email: mail@McVeighMangum.com
CA 6330
Eng. of Record: Thomas C. Nielsen
License No.: 53492

1 ALL DESIGN PRIOR TO 08/28/2025 WAS PERFORMED BY IMEG UNDER THE RESPONSIBLE CHARGE OF THOMAS C. NIELSEN, PE #53492. ALL SUBSEQUENT DESIGN BY IMEG IS UNDER THE RESPONSIBLE CHARGE OF BRIAN J. LEAVITT, PE #87733.

BRIAN JOSEPH LEAVITT
LICENSE
No. 87733
STATE OF FLORIDA
PROFESSIONAL ENGINEER

Brian Leavitt
Digitally signed by Brian Leavitt
Reason: This item has been electronically signed and sealed by Brian J. Leavitt using a Digital Signature. Printed copies of this document are not considered signed and sealed and the signature must be verified on any electronic copies.
Date: 2025.08.28 14:51:10-05'00'

BUSY BEE
ELLISVILLE

136 SW WEBBS GLN
LAKE CITY, FL 32024

PROJECT NO.:	22024
DATE:	06/02/2025

PRIOR ISSUES:

1	08/24/2025	ASI #1

ELECTRICAL
GENERAL NOTES

E0.1b

DRAWN BY:	IMEG
CHECKED BY:	IMEG

100%
CONSTRUCTION
DOCUMENTS

© 2013

KITCHEN EQUIPMENT SCHEDULE

REVISION	ITEM NO	QTY	EQUIPMENT CATEGORY	EQUIPMENT REMARKS	VOLTS	CYCLE	PHASE	DIRECT	CORD/PLUG	NEMA	AMPS	KW	HP	ELECTRICAL AFF (IN)	ELECTRICAL REMARKS
	001	1	WALK-IN COOLER AND FREEZER	REFER TO SHOP DRAWINGS	(3)115	60	1	X			(2)15			114	VERIFY WITH SHOP DRAWINGS
	001.1	1	COOLER EVAPORATOR COIL	REFER TO SHOP DRAWINGS	115	60	1	X			1.6			114	VERIFY WITH SHOP DRAWINGS
	001.2	1	COOLER CONDENSING UNIT	REFER TO SHOP DRAWINGS	208-230	60	1	X			--		--	TBD	VERIFY WITH SHOP DRAWINGS
	001.3	1	FREEZER EVAPORATOR COIL	REFER TO SHOP DRAWINGS	208-230	60	1	X			9.8			114	VERIFY WITH SHOP DRAWINGS
	001.4	1	FREEZER CONDENSING UNIT	REFER TO SHOP DRAWINGS	208-230	60	1	X			--		--	TBD	VERIFY WITH SHOP DRAWINGS
	100	3	CABINET, MOBILE, WARMING & HOLDING		120	60	1		X	5-15P	8.0	1.0		18	
	103	1	UNDERBAR PASS-THRU COOLER		120	60	1		X	5-15P	3.5		1/4	18	
	104	1	CHOCOLATE MELTER		120	60	1		X	5-15P	1.1	0.1		*	TABLE SURFACE MOUNTED OUTLET
	105	1	CHOCOLATE TEMPORING MACHINE		120	60	1		X	5-15P	7.0			18	
	108	1	RAPID COOK SERIES		208	60	1		X	L6-20	20.0	3.6		48	
	200	1	EXHAUST HOOD	REFER TO SHOP DRAWINGS	120	60	1	X			15.0			DFA	* POWER FROM ITEM 200.1; EXTEND TO LIGHT FIXTURES; VERIFY W/SHOP DRAWINGS
	200.1	1	HOOD CONTROL CENTER	MOUNTED ON TOP OF HOOD; REFER TO SHOP DRAWINGS	120	60	1	X			15.0			DFA	POWER FOR CONTROLS; VERIFY W/SHOP DWGS.
					120	60	1	X			15.0			DFA	POWER FOR HOOD LIGHTS; VERIFY W/SHOP DWGS.
					208	60	3	X			--			DFA	POWER FOR EXHAUST FAN; VERIFY W/SHOP DWGS.
					208	60	3	X			--			DFA	POWER FOR SUPPLY FAN; VERIFY W/SHOP DWGS.
	200.2	1	EXHAUST FAN	REFER TO SHOP DRAWINGS, KEF-1	208	60	3	X			10.6	3.8	3.0	DFA	POWER FROM ITEM 200.1; 20 AMP BREAKER
	200.3	1	SUPPLY FAN	REFER TO SHOP DRAWINGS, KMAU-1 (MAU)	208	60	3	X			50.6		3.0	DFA	POWER FROM ITEM 200.1; 70 AMP BREAKER
	202	1	FREEZER BASE, SELF-CONTAINED		115	60	1		X	5-20P	15.0	3.6	3/4	18	
	202.1	1	GRIDDLE, HEAVY DUTY, GAS		120	60	1		X	5-15P	0.5			18	
	204	1	OVEN-STEAMER, COMBINATION, GAS		208	60	1		X	6-15P	4.3	0.9		18	15 AMP BREAKER
					208	60	1		X	6-15P	4.3	0.9		48	15 AMP BREAKER
			WATER FILTER												
			EQUIPMENT STAND												
	205	1	OVEN-STEAMER, COMBINATION, GAS		208	60	1				10.6	2.2		18	15 AMP BREAKER
			WATER FILTER SYSTEM												
	206	1	TILT SKILLET		120	60	1		X	5-15P	9.0			18	
	207	1	FRYER BATTERY, DEEP FAT, GAS W/FILTER		115	60	1		X	5-15P	7.0		1/3	18	
					115	60	1		X	5-15P	2.0			18	
	208	1	FREEZER, REACH-IN, LEFT HINGE		120	60	1		X	5-15P	7.6		1/2	84	
	300	1	REFRIGERATOR, REACH-IN		120	60	1		X	5-15P	5.9		1/4	84	
	303	1	REFRIGERATOR, UNDERCOUNTER		115	60	1		X	5-15P	2.5		1/5	18	
	304	1	SLICER, FOOD		115	60	1		X	5-15P	2.5		1/4	18	
	402	2	REFRIGERATOR, REACH-IN		120	60	1		X	5-15P	8.1		1/3	84	
	404	1	DROP-IN, COLD PAN		120	60	1		X	5-15P	3.7		1/4	*	INSTALLED IN TABLE ITEM No. 403
	406	1	DROP-IN, HOT WELLS NARROW		120	60	1		X	5-20P	17.0	2.0		*	INSTALLED IN TABLE ITEM No. 405
	406.1	1	DROP-IN, HOT WELLS		115	60	1		X	5-15P	8.3	1.0		*	INSTALLED IN TABLE ITEM No. 405
	408	2	VACUUM PACKAGING MACHINE		110-120	60	1		X	5-15P	9.5		3/4	*	TABLE SURFACE MOUNTED OUTLET
	501	1	REFRIGERATOR, WORKTOP		115	60	1		X	5-15P	2.5		1/5	18	
	502	1	DOUGH DIVIDER/ROUNDER		115	60	1		X	5-15P	7.5		3/4	18	
	503	1	DOUGH DIVIDER		115	60	1				*			18	AMPS TO BE DETERMINED
	504	2	MIXER, SPIRAL		208	60	3	X			34.5		6.0	18	
	505	1	WATER METER		115	60	1		X	5-15P	1.0			72	
	700	4	CABINET, MOBILE, WARMING & HOLDING		120	60	1		X	5-20P	16.0	1.9		78	
	701	2	REFRIGERATOR, REACH-IN		120	60	1		X	5-15P	8.1		1/3	84	
	801	6	PIZZA DOUGH PRESS		220	60	1	X			20.0	4.0		48	
	804	3	PIZZA OVEN		240	60	3		X	14-50R	50.0			48	
	806	3	REFRIGERATOR, PIZZA PREP		115	60	1		X	5-15P	7.4		1/3	18	
	902	1	WAREWASHER, DOOR TYPE, HIGH TEMP	W/BOOSTER HEATER	208	60	3	X			49.0			74	* JB @12" ABOVE FINISHED CEILING. CONNECTED TO NEMA-3R DISCONNECT SWITCH
	902.2	1	EXHAUST FAN	REFER TO SHOP DRAWINGS	115	60	1	X			--		TBD		INTER. W / WAREWASHER; VRFY W/SHOP DWGS
	907	1	ICE MAKER W/O BIN		208-230	60	1	X			11.8			48	20 AMP DEDICATED CIRCUIT
	CO	TBD	CONVENIENCE OUTLET (BY OTHERS)		115	60	1		X	5-15P	15.0			48	

CENTER STAGE EQUIPMENT SCHEDULE

REVISION	ITEM NO	QTY	EQUIPMENT CATEGORY	MANUFACTURER	MODEL NUMBER	EQUIPMENT REMARKS	VOLTS	CYCLE	PHASE	DIRECT	CORD/PLUG	NEMA	AMPS	KW	HP	ELECTRICAL AFF (IN)	ELECTRICAL REMARKS
	A350	1	SERVICE ISLAND WITH GRANITE TOP (CBI CUSTOM)	CBI CUSTOM	CUSTOM FAB	REFER TO SHOP DRAWINGS WHEN AVAILIBLE											
	A351	1	SINK, DROP-IN, HAND	JOHN BOOS & CO.	PB-DISINK282012												
	A352	2	RACK, HALF HEIGHT	CHANNEL MANUFACTURING	432A												
	A353	1	KETTLE, ELECTRIC, COUNTERTOP	CALICO COTTAGE / GROEN	TDB-8		120	60	1		X	5-15P	2.5				SURFACE MOUNT (TO BE VERIFIED)
	A354	2	OVEN, MICROWAVE	ACP, INC.	RCS511DSE		230	50	1		X	5-15P	15.0	15.5			SURFACE MOUNT (TO BE VERIFIED)
	A355	1	REFRIGERATOR, UNDERCOUNTER	CONTINENTAL REFRIGERATOR	SW36N-FB		115	60	1		X	5-15P	2.5			18	
	A356	2	BLENDING POT	GOLD MEDAL PRODUCTS CO.	2703-00-0000		120	60	1		X	5-15P	3.1	3.8			SURFACE MOUNT (TO BE VERIFIED)
	A357	1	TWIN KETTLE PRO PLANT STAND	GOLD MEDAL PRODUCTS CO.	2791-00-101												
	A358	1	CORNADO POPPING UNIT	GOLD MEDAL PRODUCTS CO.	2410-00-210	INSTALLED RIGHT SIDE	120/208	60	1		X	L14-30P	30.0	54.0			SURFACE MOUNT (TO BE VERIFIED)
		1	CORNADO POPPING UNIT	GOLD MEDAL PRODUCTS CO.	2410-00-200	INSTALLED LEFT SIDE	120/208	60	1		X	L14-30P	30.0	54.0			SURFACE MOUNT (TO BE VERIFIED)
	A359	1	SLIDE-OUT SHELF (CBI CUSTOM)	CBI CUSTOM	CUSTOM FAB	REFER TO SHOP DRAWINGS WHEN AVAILIBLE											
	A360	1	HEAT HOOD	CBI CUSTOM	CUSTOM FAB	REFER TO SHOP DRAWINGS WHEN AVAILIBLE											
	B300	1	SERVICE ISLAND WITH GRANITE TOP (CBI CUSTOM)	CBI CUSTOM	CUSTOM FAB	REFER TO SHOP DRAWINGS WHEN AVAILIBLE											
	B301	3	NUT ROASTER	CALICO COTTAGE	EP8000043		120	60	1		X	5-20P	15.0	18.0			SURFACE MOUNT (TO BE VERIFIED)
	B302	2	OVEN, MICROWAVE	ACP, INC.	RCS511DSE		230	50	1		X	5-15P	15.0	15.5			SURFACE MOUNT (TO BE VERIFIED)
	B303	3	REFRIGERATOR, UNDERCOUNTER	CONTINENTAL REFRIGERATOR	SW36N-FB		115	60	1		X	5-15P	2.5		1/5	18	
	B304	2	RACK, HALF HEIGHT	CHANNEL MANUFACTURING	430A												
	B305	1	KETTLE, ELECTRIC, COUNTERTOP	CALICO COTTAGE / GROEN	TDB-8		120	60	1		X	5-15P	2.5				SURFACE MOUNT (TO BE VERIFIED)
	B306	2	SINK, DROP-IN, HAND	JOHN BOOS & CO.	PB-DISINK282012												
	B307	1	SLIDE-OUT SHELF (CBI CUSTOM)	CBI CUSTOM	CUSTOM FAB	REFER TO SHOP DRAWINGS WHEN AVAILIBLE											
	B308	2	BLENDING POT	GOLD MEDAL PRODUCTS CO.	2703-00-0000		120	60	1		X	5-15P	3.1	3.8			SURFACE MOUNT (TO BE VERIFIED)
	C250	1	SERVICE ISLAND WITH GRANITE TOP	CBI CUSTOM	CUSTOM FAB	REFER TO SHOP DRAWINGS WHEN AVAILIBLE											
	C251	1	LABEL PRINTING SCALE	PENN SCALE	CL5500B-30		100-240	60	1		X	TBD	4.0				SURFACE MOUNT (TO BE VERIFIED)
	C252	2	RACK, HALF HEIGHT	CHANNEL MANUFACTURING	430A												
	D200	1	SERVICE ISLAND WITH GRANITE TOP	CBI CUSTOM	CUSTOM FAB	REFER TO SHOP DRAWINGS WHEN AVAILIBLE											
	D201	1	LABEL PRINTING SCALE	PENN SCALE	CL5500B-30		100-240	60	1		X	TBD	4.0				SURFACE MOUNT (TO BE VERIFIED)
	D202	2	RACK, HALF HEIGHT	CHANNEL MANUFACTURING	430A												
	E450	1	SERVICE ISLAND WITH GRANITE (CBI CUSTOM)	CBI CUSTOM	CUSTOM FAB	REFER TO SHOP DRAWINGS WHEN AVAILIBLE											
	E451	1	LABEL PRINTING SCALE	PENN SCALE	CL5500B-30		100-240	60	1		X	TBD	4.0				SURFACE MOUNT (TO BE VERIFIED)
	F400	1	SERVICE ISLAND GRANITE TOP (BY OTHERS)	CBI CUSTOM	CUSTOM FAB	REFER TO SHOP DRAWINGS WHEN AVAILIBLE											
	F401	1	LABEL PRINTING SCALE	PENN SCALE	CL5500B-30		100-240	60	1		X	TBD	4.0				SURFACE MOUNT (TO BE VERIFIED)
	F402	2	CONVECTION OVEN	WISCO INDUSTRIES, INC.	621		115	60	1		X	5-15P	10.9	13.0			SURFACE MOUNT (TO BE VERIFIED)
	G100	2	DISPLAY CASE, REFRIGERATED (SIZE TO BE DETERMINED)	FEDERAL INDUSTRIES	TO BE DETERMINED		115	60	1		X	5-15P	12.0		1/2	18	
	G101	2	DISPLAY CASE, REFRIGERATED (SIZE TO BE DETERMINED)	FEDERAL INDUSTRIES	TO BE DETERMINED		115	60	1		X	5-15P	12.0		1/2	18	
	G102	2	AMBIENT CASE (SIZE TO BE DETERMINED)	FEDERAL INDUSTRIES	TO BE DETERMINED		115	60	1		X	5-15P	7.0			18	
	G103	2	AMBIENT CASE (SIZE TO BE DETERMINED)	FEDERAL INDUSTRIES	TO BE DETERMINED		115	60	1		X	5-15P	7.0			18	
	G104	*	SPARE NUMBER														
	G105	*	SPARE NUMBER														
	G106	2	3 SECTION ELITE STORAGE CABINET	GOD METAL PRODUCTS CO	2687-00-030		120	60	1		X	5-15P	13.0	0.9			15 AMP DED. CIR. / SURFACE MOUNT (TO BE VER.)
	G107	1	MILLWORK SALES COUNTER W/ GRANITE TOP (BY OTHERS)	BY OTHERS	BY OTHERS	REFER TO ARCH. DRAWINGS WHEN AVAILIBLE											
	G108	1	MILLWORK SALES COUNTER W/ GRANITE TOP (BY OTHERS)	BY OTHERS	BY OTHERS	REFER TO ARCH. DRAWINGS WHEN AVAILIBLE											
	G109	1	MILLWORK SALES COUNTER W/ GRANITE TOP (BY OTHERS)	BY OTHERS	BY OTHERS	REFER TO ARCH. DRAWINGS WHEN AVAILIBLE											
	G110	1	MILLWORK SALES COUNTER W/ GRANITE TOP (BY OTHERS)	BY OTHERS	BY OTHERS	REFER TO ARCH. DRAWINGS WHEN AVAILIBLE											
	G111	1	MILLWORK SALES COUNTER W/ GRANITE TOP (BY OTHERS)	BY OTHERS	BY OTHERS	REFER TO ARCH. DRAWINGS WHEN AVAILIBLE											
	G112	1	MILLWORK SALES COUNTER W/ GRANITE TOP (BY OTHERS)	BY OTHERS	BY OTHERS	REFER TO ARCH. DRAWINGS WHEN AVAILIBLE											
	G113	1	MILLWORK SALES COUNTER W/ GRANITE TOP (BY OTHERS)	BY OTHERS	BY OTHERS	REFER TO ARCH. DRAWINGS WHEN AVAILIBLE											
	G114	48	DROP-DOWN LIGHTING / FOOD WARMERS (BY OTHERS)	BY OTHERS	BY OTHERS	REFER TO M.E.P. DRAWINGS WHEN AVAILIBLE											DATA SUPPLIED BY OTHERS
	CO	TBD	CONVENIENCE OUTLET	BY OTHERS	BY OTHERS	REFER TO ARCH. DRAWINGS WHEN AVAILIBLE	120	60	1		X	5-15P	15.0				SURFACE MOUNT (TO BE VERIFIED)

1

EQUIPMENT SCHEDULE

Type Mark	Count	Description	MFR/ Model No.	Owner Provided	Contractor Provided	Owner Installed	Contractor Installed	Comments
E01	2	Countertop Ice Machine	Follett - Symphony Plus / 12CI425A-S	Yes	No	Yes	No	
E02	4	Iced Tea Brewer	Bunn / TB6Q	Yes	No	Yes	No	
E03	2	Cappuccino Machine	Curtis / PCGT3	Yes	No	Yes	No	
E04	6	Bean to Cup Coffee	Curtis / Schaerer Soul C	Yes	No	Yes	No	
E05	2	Coffee Brewer	Curtis / G4 GemX Intellifresh Coffee Brewer	Yes	No	Yes	No	
E06	3	Soda Machine	Multiplex / MDH-402 Beverage Dispenser	Yes	No	Yes	No	
E07	4	ICEE Machine	ICEE / Frozen Carbonated Beverage Dispenser 774 4B	Yes	No	Yes	No	
E08	4	Cold Food Drop-In Well	Alto-Shaam 100-CW Series	Yes	No	Yes	No	

EQUIPMENT STARTERS AND DISCONNECTS

EQUIPMENT	HP, KW or MCA/MOCP, FLA	NOTES	VOLTAGE					STARTER								DISCONNECT MEANS						CONTROL				FEEDER SIZE
			120V-1PH	208V-1PH	208V-3PH	277V-1PH	480V-3PH	NEMA SIZE	MAGNETIC	MANUAL	MANUAL STARTER & CONTACTOR	VARIABLE FREQ DRIVE	INTEGRAL OVERLOAD	IN MOTOR CONTROL CNTR	SEE NOTE	FURNISHED BY	DISCONNECT SWITCH	MANUAL STARTER	CORD & PLUG	STARTER / DISCONNECT	SWITCH OR BREAKER	SEE NOTE	FURNISHED BY	MANUAL	INTEGRAL	SEE NOTE	FURNISHED BY	
RTU-1	45 MCA/ 50 MOCP	-					*					*				ES	*						ES			-	-	(3)-#6, (1)-#10 GND IN 1" C
RTU-2	45 MCA/ 50 MOCP	-					*					*				ES	*						ES			-	-	(3)-#6, (1)-#10 GND IN 1" C
RTU-3	62 MCA/ 80 MOCP	-					*					*				ES	*						ES			-	-	(3)-#3, (1)-#8 GND IN 1-1/4" C
RTU-4	106 MCA/ 125 MOCP	-					*					*				ES	*						ES			-	-	(3)-#1, (1)-#6 GND IN 1-1/2" C
RTU-5	106 MCA/ 125 MOCP	-					*					*				ES	*						ES			-	-	(3)-#1, (1)-#6 GND IN 1-1/2" C
RTU-6	106 MCA/ 125 MOCP	-					*					*				ES	*						ES			-	-	(3)-#1, (1)-#6 GND IN 1-1/2" C
DOAS-7	75.3 MCA/ 80 MOCP	-					*					*				ES	*						ES			-	-	(3)-#3, (1)-#8 GND IN 1-1/4" C
RTU-8	30 MCA/ 40 MOCP	-					*					*				ES	*						ES			-	-	(3)-#8, (1)-#10 GND IN 3/4" C
RTU-9	12 MCA/ 15 MOCP	-					*					*				ES	*						ES			-	-	(3)-#12, (1)-#12 GND IN 3/4" C
DOAS-10	28.7 MCA/ 30 MOCP	-					*					*				ES	*						ES			-	-	(3)-#10, (1)-#10 GND IN 3/4" C
DSS-1/DCU-1	9 MCA/ 16 MOCP	-		*												ES	*						EC				-	(2)-#10, (1)-#12 GND IN 3/4" C
RTU-10	62 MCA/ 80 MOCP	-					*									ES	*						ES				-	(3)-#3, (1)-#8 GND IN 1-1/4" C
DWEF-1	15 MOCP	-	*													ES	*						EC				-	(2)-#12, (1)-#12 GND IN 3/4" C
KEF-1	20 MOCP				*											ES	*						EC					(3)-#10, (1)-#12 GND IN 3/4" C
KMAU-1	50.6 MCA/ 70 MOCP				*											ES	*						ES					(3)-#4, (1)-#8 GND IN 1-1/4" C
ACR-1	6.9 MCA/ 15 MOCP				*											ES	*						EC					(3)-#12, (1)-#12 GND IN 3/4" C

ES - EQUIPMENT SUPPLIER
EC - ELECTRICAL CONTRACTOR
MC - MECHANICAL CONTRACTOR

NOT FOR CONSTRUCTION

kasper architects + assoc.
10175 Fortune Parkway, Suite 701
Jacksonville, FL 32256
p 904.683.9201 f 904.683.9702
www.kasperarch.com
FL License No.: AA26000802

IMEG
formerly McVeigh & Mangum Engineering
www.IMEGCorp.com
9133 R.G. Skinner Parkway
Jacksonville, Florida 32256
Ph: (904) 483-5200 Fax: (904) 636-6700
email: mail@McVeighMangum.com
CA 6330
Eng. of Record: Thomas C. Nielsen
License No.: 53492

1 ALL DESIGN PRIOR TO 08/28/2025 WAS PERFORMED BY IMEG UNDER THE RESPONSIBLE CHARGE OF THOMAS C. NIELSEN, PE #53492. ALL SUBSEQUENT DESIGN BY IMEG IS UNDER THE RESPONSIBLE CHARGE OF BRIAN J. LEAVITT, PE #87733.

BRIAN JOSEPH LEAVITT
LICENSE
No. 87733
STATE OF FLORIDA
PROFESSIONAL ENGINEER
Digitally signed by Brian Leavitt
Reason: This item has been electronically signed and sealed by Brian Leavitt using a Digital Signature. Printed copies of this document are considered signed and sealed and the signature must be verified on any electronic copies
Date: 2025.08.28 14:52:01-05'00'
Brian Leavitt

BUSY BEE
ELLISVILLE

136 SW WEBBS GLN
LAKE CITY, FL 32024

PROJECT NO.: 22024
DATE: 06/02/2025
PRIOR ISSUES:
1 08/24/2025 ASI #1

ELECTRICAL EQUIPMENT SCHEDULES

E0.2

DRAWN BY: Author
CHECKED BY: Checker

100% CONSTRUCTION DOCUMENTS

© 2013

ALL REPORTS, SPECIFICATIONS, COMPUTER FILES, FIELD DATA, AND OTHER DOCUMENTATION PREPARED BY KASPER ARCHITECTURE & DEVELOPMENT, INC. (KAD) AS INSTRUMENTS OF SERVICE SHALL REMAIN THE PROPERTY OF KAD. KAD SHALL RETAIN ALL COMMON LAW, STATUTORY AND OTHER RESERVED RIGHTS, INCLUDING THE COPYRIGHT THERETO. THIS DRAWING SHALL NEVER BE REPRODUCED IN WHOLE OR IN PART WITHOUT THE EXPRESS WRITTEN PERMISSION OF KAD.

LIGHTING SYSTEMS COMMISSIONING REQUIREMENTS

LIGHTING CONTROL SYSTEM SHALL UNDERGO FUNCTIONAL TESTING AS DESCRIBED BELOW. TESTING SHALL BE BY THE CONTRACTOR UNDER THE SUPERVISION OF A CERTIFIED REPRESENTATIVE OF THE LIGHTING CONTROL SYSTEMS MANUFACTURER(S).

PRIOR TO PASSING FINAL INSPECTION, THE LIGHTING CONTROL SYSTEMS SHALL HAVE BEEN TESTED TO ENSURE THAT CONTROL HARDWARE AND SOFTWARE ARE CALIBRATED, ADJUSTED, PROGRAMMED AND IN PROPER WORKING CONDITION IN ACCORDANCE WITH THE CONSTRUCTION DOCUMENTS AND MANUFACTURER'S INSTRUCTIONS. THE CONTRACTOR SHALL SUBMIT A LETTER CERTIFYING THE SUCCESSFUL COMPLETION OF FUNCTIONAL TESTING TO THE ENGINEER AT LEAST 2 DAYS PRIOR TO FINAL INSPECTION. THIS CERTIFICATION LETTER MUST BE AVAILABLE TO THE INSPECTOR AT THE TIME OF FINAL INSPECTION.

OCCUPANT SENSOR CONTROLS
1. CERTIFY THAT THE OCCUPANT SENSORS HAVE BEEN LOCATED AND AIMED FOR PROPER COVERAGE OF THE INTENDED AREA IN ACCORDANCE WITH MANUFACTURER RECOMMENDATIONS.
2. FOR PROJECTS WITH SEVEN OR FEWER OCCUPANT SENSORS, EACH SENSOR SHALL BE TESTED.
3. FOR PROJECTS WITH MORE THAN SEVEN OCCUPANT SENSORS, TESTING SHALL BE DONE FOR EACH UNIQUE COMBINATION OF SENSOR TYPE AND SPACE GEOMETRY. WHERE MULTIPLES OF EACH UNIQUE COMBINATION OF SENSOR TYPE AND SPACE GEOMETRY ARE PROVIDED, NOT LESS THAN 10 PERCENT, BUT IN NO CASE LESS THAN ONE, OF EACH COMBINATION SHALL BE TESTED UNLESS THE CODE OFFICIAL REQUIRES A HIGHER PERCENTAGE TO BE TESTED. WHERE 30 PERCENT OR MORE OF THE TESTED CONTROLS FAIL, ALL REMAINING IDENTICAL COMBINATIONS SHALL BE TESTED.

FOR OCCUPANT SENSOR CONTROLS TO BE TESTED, VERIFY THE FOLLOWING:
1. WHERE OCCUPANT SENSOR CONTROLS INCLUDE STATUS INDICATORS, VERIFY CORRECT OPERATION.
2. THE CONTROLLED LIGHTS TURN OFF OR DOWN TO THE PERMITTED LEVEL WITHIN THE REQUIRED TIME.
3. FOR AUTO-ON OCCUPANT SENSOR CONTROLS, THE LIGHTS TURN ON TO THE PERMITTED LEVEL WHEN AN OCCUPANT ENTERS THE SPACE.
4. FOR MANUAL-ON OCCUPANT SENSOR CONTROLS, THE LIGHTS TURN ON ONLY WHEN MANUALLY ACTIVATED.
5. THE LIGHTS ARE NOT INCORRECTLY TURNED ON BY MOVEMENT IN ADJACENT AREAS OR BY HVAC OPERATION.

TIME-SWITCH CONTROLS
1. CONFIRM THAT THE TIME-SWITCH CONTROL IS PROGRAMMED WITH ACCURATE WEEKDAY, WEEKEND AND HOLIDAY SCHEDULES.
2. PROVIDE DOCUMENTATION TO THE OWNER OF TIME-SWITCH CONTROLS PROGRAMMING INCLUDING WEEKDAY, WEEKEND, HOLIDAY SCHEDULES, AND SET-UP AND PREFERENCE PROGRAM SETTINGS ARE AS DIRECTED BY THE OWNER.
3. VERIFY THE CORRECT TIME AND DATE IN THE TIME SWITCH.
4. VERIFY THAT ANY BATTERY BACK-UP IS INSTALLED AND ENERGIZED.
5. VERIFY THAT THE OVERRIDE TIME LIMIT IS SET TO NOT MORE THAN 2 HOURS (OR KEY SWITCH OVERRIDE PROVISION IN RETAIL APPLICATIONS).
6. SIMULATE OCCUPIED CONDITION. VERIFY AND DOCUMENT THE FOLLOWING:
   a. ALL LIGHTS CAN BE TURNED ON AND OFF BY THEIR RESPECTIVE AREA CONTROL SWITCH.
   b. THE SWITCH ONLY OPERATES LIGHTING IN THE ENCLOSED SPACE IN WHICH THE SWITCH IS LOCATED.
7. SIMULATE NOCCUPIED CONDITION. VERIFY AND DOCUMENT THE FOLLOWING:
   a. NONEXEMPT LIGHTING TURNS OFF.
   b. MANUAL OVERRIDE SWITCH ALLOWS ONLY THE LIGHTS IN THE ENCLOSED SPACE WHERE THE OVERRIDE SWITCH IS LOCATED TO TURN ON OR REMAIN ON UNTIL THE NEXT SCHEDULED SHUTOFF OCCURS.

DAYLIGHT RESPONSIVE CONTROLS.
1. CONTROL DEVICES HAVE BEEN PROPERLY LOCATED, FIELD CALIBRATED AND SET FOR ACCURATE SETPOINTS AND THRESHOLD LIGHT LEVELS.
2. DAYLIGHT CONTROLLED LIGHTING LOADS ADJUST TO LIGHT LEVEL SET POINTS IN RESPONSE TO AVAILABLE DAYLIGHT.
3. THE LOCATIONS OF CALIBRATION ADJUSTMENT EQUIPMENT ARE READILY ACCESSIBLE ONLY TO AUTHORIZED PERSONNEL.

EXTERIOR LIGHTING CONTROLS
1. PHOTOCELL/SENSORS HAVE BEEN PROPERLY LOCATED, FIELD CALIBRATED AND SET FOR ACCURATE SETPOINTS AND THRESHOLD LIGHT LEVELS.
2. TIME SWITCH CONTROL AS DESCRIBED ABOVE.
3. AFTER-HOURS LIGHTING LEVEL REDUCTION IS IMPLEMENTED IN ACCORDANCE WITH THE OWNER'S SCHEDULE DIRECTION (EITHER FROM MIDNIGHT TO 6AM OR, FROM ONE HOUR AFTER TO ONE HOUR PRIOR TO BUSINESS HOURS.)
4. THE LOCATIONS OF CALIBRATION ADJUSTMENT EQUIPMENT ARE READILY ACCESSIBLE ONLY TO AUTHORIZED PERSONNEL.

AS-BUILT DOCUMENTATION
DOCUMENTS CERTIFYING THAT THE INSTALLED LIGHTING CONTROLS MEET THE DOCUMENTED PERFORMANCE CRITERIA OF FBC ENERGY CODE SECTION C405 SHALL BE PROVIDED IN THE PROJECT AS-BUILT DOCUMENTATION. DELIVERY OF AS-BUILT DOCUMENTATION SHALL BE PROVIDED TO THE BUILDING OWNER WITHIN 30 DAYS FROM THE DATE OF RECEIPT OF THE CERTIFICATE OF OCCUPANCY.

1

LUMINAIRE SCHEDULE

TAG	DESCRIPTION	MANUFACTURER	CATALOG NUMBER	VOLTS	TYPE	LUMENS	WATTS	NOTES
E	BACKLIT PANEL 2X4, 6000 lm, 4000K, 80 CRI UNV	LSI	ABP24 FS1 UNV	120-277	LED	6000	48.0	
E1	BACKLIT PANEL 2X2, 3125 lm, 4000K, 80 CRI UNV	LSI	ABP22 FS1 UNV	120-277	LED	3000	25.0	
F3WF	LED FLOOD LIGHT, 16000 lm, 4000K UNV,	LSI	TLFL 16L F UNV 40 KN	120-277	LED	16000	121.0	
P1	LED HIGH BAY LIGHT, 8000 lm, 4000K	VANTAGE LIGHTING	AGV BLED16 80	120-277	LED	8000	85.2	
R1A	LENSED, LED DOWN LIGHT, 1100 lm	VANTAGE LIGHTING	A6VEFLED U 11	120-277	LED	1100	15.4	
R1B	LENSED, LED DOWN LIGHT, 2000 lm	VANTAGE LIGHTING	A6VEFLED U 20	120-277	LED	2000	27.2	
R1C	LENSED, LED DOWN LIGHT, 3000 lm	VANTAGE LIGHTING	A6VEFLED U 30	120-277	LED	3000	33.5	
R1D	LENSED, LED DOWN LIGHT, 2000 lm	VANTAGE LIGHTING	A6VEFLED U 20	120-277	LED	2000	27.2	
R2	SURFACESLICE DOWN LIGHT, 1000 lm	SPRING LIGHTING GROUP	DS 5R LS10 G2 UNV 9FSK	120-277	LED	1000	16.3	
R3	4 INCH WIDE RECESSED LIGHT, 600 lm, FROSTED DIFFUSE	LSI	4RLS X LED 06L LF UE	120-277	LED	600	5.7	1
S4	STRIP FIXTURE, 2831 lm, 4000K	LSI	AST X FS SPD UNC TCH10	120-277	LED	2831	20.0	1
S8	STRIP FIXTURE, 2061 lm, 4000K	LSI	AST X FS SPD UNC TCH10	120-277	LED	2061	15.0	1
X	VALUE -SERIES EXIT SIGN UNIVERSAL MOUNT EDGE-LIT LED	LSI	VE U 6 R/G U WB SD2	120-277	LED	N/A	5.0	

KEY NOTES
1. SEE PLANS FOR FIXTURE LENGTH.
2
3
4
5

GENERAL NOTES
A
B
C
D
H

SITE LUMINAIRE SCHEDULE

TAG	QTY	DESCRIPTION	MANUFACTURER	CATALOG NUMBER	VOLTS	TYPE	LUMENS	TOTAL FIXTURE WATTS	NOTES
A	4	LED AREA LIGHT, DIE-CAST ALUMINUM HOUSING, ACRYLIC OPTICS, INTEGRAL SHIELD, IP 66 RATED. FINISH SELECTED BY ARCHITECT.	LSI	VALM-42L-3W-40K8-IS	120-277	LED	27157	1044	Lumens value is per fixture head Each fixture head is 261W
P33	47	LED AREA LIGHT, DIE-CAST ALUMINUM HOUSING, ACRYLIC OPTICS, INTEGRAL SHIELD, IP 66 RATED, 3000K. FINISH SELECTED BY ARCHITECT.	LSI	VALS-12L-3W-30K8-IS	120-277	LED	7627	74	
P34	5	LED AREA LIGHT, DIE-CAST ALUMINUM HOUSING, ACRYLIC OPTICS, IP 66 RATED. FINISH SELECTED BY ARCHITECT.	LSI	VALS-12-4F-40K8	120-277	LED	9852	74	
P35	38	LED 2-HEADED AREA LIGHT, DIE-CAST ALUMINUM HOUSING, ACRYLIC OPTICS, IP 66 RATED. FINISH SELECTED BY ARCHITECT.	LSI	VALS-12-4F-40K8	120-277	LED	9852	148	Lumens value is per fixture head Each fixture head is 74W

GENERAL NOTES
A. 4000K STANDARD UNLESS OTHERWISE NOTED.

kasper architects + assoc.
10175 Fortune Parkway, Suite 701
Jacksonville, FL 32256
p 904.683.9201 f 904.683.9702
www.kasperarch.com
FL License No.: AA26000802

IMEG
formerly McVeigh & Mangum Engineering
www.IMEGCorp.com
9133 R.G. Skinner Parkway
Jacksonville, Florida 32256
Ph: (904) 483-5200 Fax: (904) 636-6700
email: mail@McVeighMangum.com
CA 6330
Eng. of Record: Thomas C. Nielsen
License No.: 53492

1

ALL DESIGN PRIOR TO 08/28/2025 WAS PERFORMED BY IMEG UNDER THE RESPONSIBLE CHARGE OF THOMAS C. NIELSEN, PE #53492.
ALL SUBSEQUENT DESIGN BY IMEG IS UNDER THE RESPONSIBLE CHARGE OF BRIAN J. LEAVITT, PE #87733.

BRIAN JOSEPH LEAVITT
LICENSE
No. 87733
STATE OF FLORIDA
PROFESSIONAL ENGINEER

Brian Leavitt

Digitally signed by Brian Leavitt
Reason: This item has been electronically signed and sealed by Brian J. Leavitt using a Digital Signature. Printed copies of this document are not considered signed and sealed and the signature must be verified on any electronic copies.
Date: 2025.08.28 14:52:18-05'00'

BUSY BEE
ELLISVILLE

136 SW WEBBS GLN
LAKE CITY, FL 32024

PROJECT NO.:	22024
DATE:	06/02/2025

PRIOR ISSUES:

1	08/24/2025	ASI #1

LUMINAIRE NOTES AND SCHEDULE

E0.3

DRAWN BY:	IMEG
CHECKED BY:	IMEG

100% CONSTRUCTION DOCUMENTS

© 2013

ALL REPORTS, SPECIFICATIONS, COMPUTER FILES, FIELD DATA, AND OTHER DOCUMENTATION PREPARED BY KASPER ARCHITECTURE & DEVELOPMENT, INC. (KAD) AS INSTRUMENTS OF SERVICE SHALL REMAIN THE PROPERTY OF KAD. KAD SHALL RETAIN ALL COMMON LAW, STATUTORY AND OTHER RESERVED RIGHTS, INCLUDING THE COPYRIGHT THERETO. THIS DRAWING SHALL NEVER BE REPRODUCED IN WHOLE OR IN PART WITHOUT THE EXPRESS WRITTEN PERMISSION OF KAD

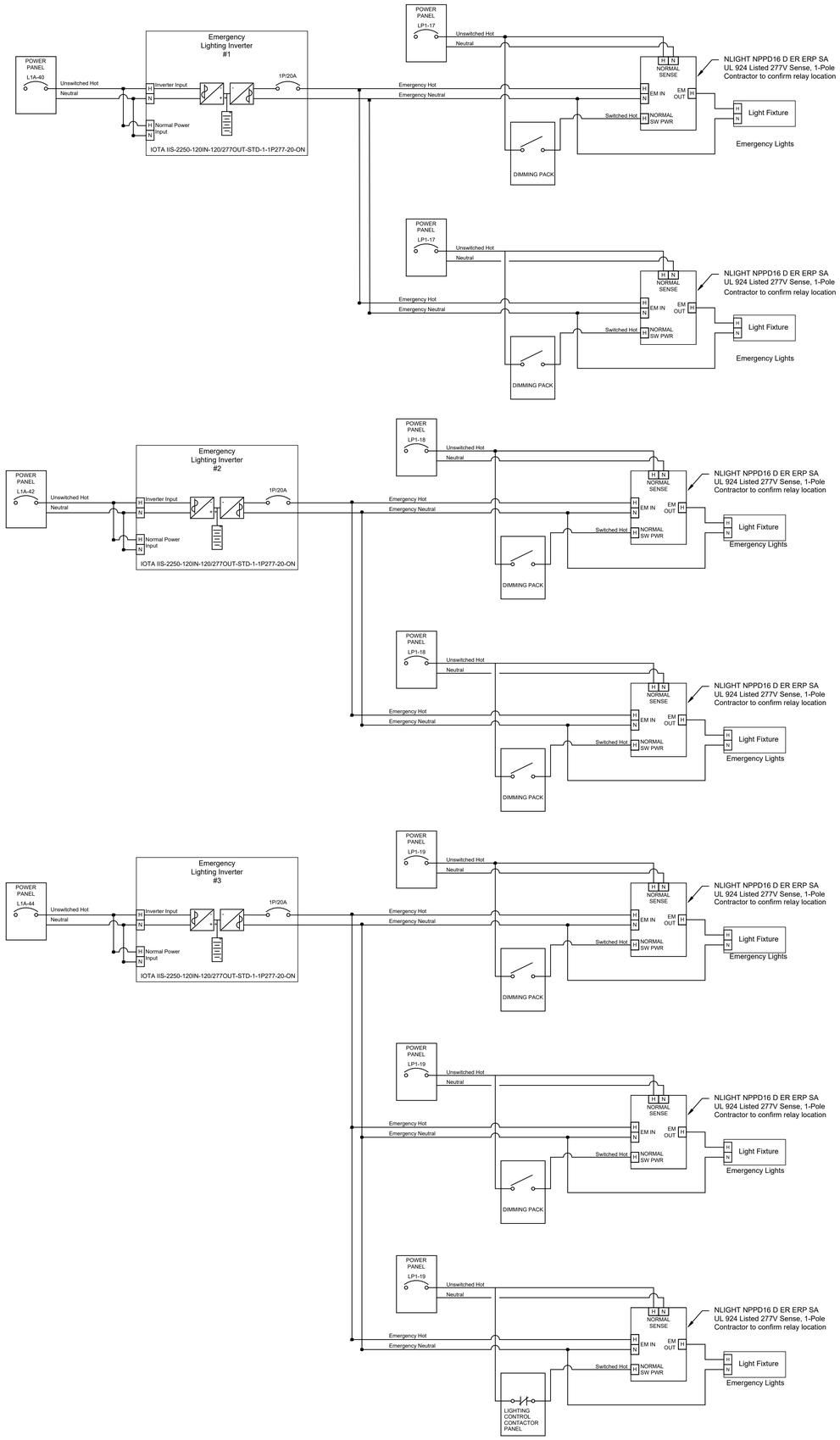

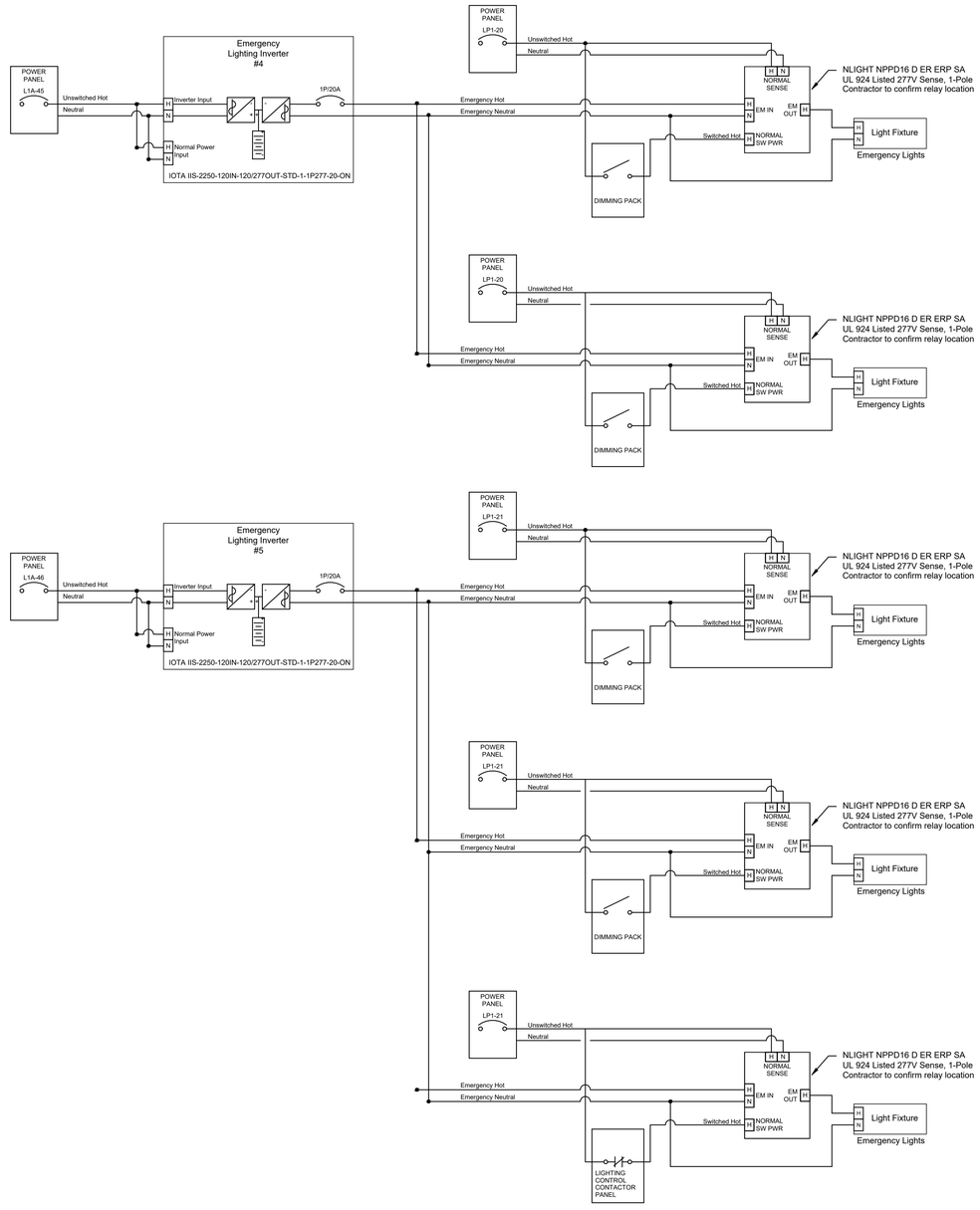

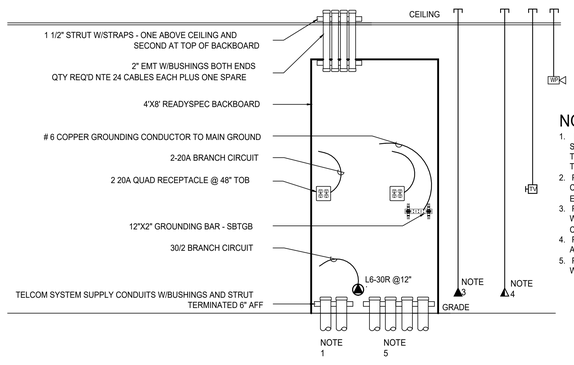

NOTES:

1. TWO 2"C TO PROPERTY LINE FOR TELECOM SERVICE. COORDINATE WITH BOTH TELECOM VENDORS FOR LOCATION OF TERMINATION POINT.
2. PROVIDE 3/4" EMT STUBBED ABOVE CEILING WITH INSULATING BUSHING FOR EACH TELEPHONE ONLY OUTLET.
3. PROVIDE 1" EMT STUBBED ABOVE CEILING WITH INSULATING BUSHING FOR EACH COMBINATION TELEPHONE/DATA OUTLET.
4. PROVIDE INSULATING BUSHING ON ENDS OF ALL CONDUITS
5. PROVIDE (2) 2"C EACH TO STARBUCKS AND WESTGATE SPACES.

TELECOM RISER DIAGRAM

kasper architects + assoc.
10175 Fortune Parkway, Suite 701
Jacksonville, FL 32256
p 904.683.9201 f 904.683.9702
www.kasperarch.com
FL License No.: AA26000802

IMEG
formerly McVeigh & Mangum Engineering
www.IMEGCorp.com
9133 R.G. Skinner Parkway
Jacksonville, Florida 32256
Ph: (904) 483-5200 Fax: (904) 636-6700
email: mail@McVeighMangum.com
CA 6330
Eng. of Record: Thomas C. Nielsen
License No.: 53492

1 ALL DESIGN PRIOR TO 08/28/2025 WAS PERFORMED BY IMEG UNDER THE RESPONSIBLE CHARGE OF THOMAS C. NIELSEN, PE #53492. ALL SUBSEQUENT DESIGN BY IMEG IS UNDER THE RESPONSIBLE CHARGE OF BRIAN J. LEAVITT, PE #87733.

BRIAN JOSEPH LEAVITT
LICENSE No. 87733
STATE OF FLORIDA
PROFESSIONAL ENGINEER

Brian Leavitt

Digitally signed by Brian Leavitt
Reason: This item has been electronically signed and sealed by Brian J. Leavitt using a Digital Signature and Seal. Printed copies of this document are not considered signed and sealed and the signature must be verified on any electronic copies.
Date: 2025.08.28 14:52:38-05'00'

BUSY BEE ELLISVILLE

136 SW WEBBS GLN
LAKE CITY, FL 32024

PROJECT NO.:	22024
DATE:	06/02/2025

PRIOR ISSUES:

1	08/24/2025	ASI #1

SYSTEM RISER DIAGRAM

E0.4

DRAWN BY:	IMEG
CHECKED BY:	IMEG

100% CONSTRUCTION DOCUMENTS

© 2013

ALL REPORTS, SPECIFICATIONS, COMPUTER FILES, FIELD DATA, AND OTHER DOCUMENTATION PREPARED BY KASPER ARCHITECTURE & DEVELOPMENT, INC. (KAD) AS INSTRUMENTS OF SERVICE SHALL REMAIN THE PROPERTY OF KAD. KAD SHALL RETAIN ALL COMMON LAW, STATUTORY AND OTHER RESERVED RIGHTS, INCLUDING THE COPYRIGHT THERETO. THIS DRAWING SHALL NEVER BE REPRODUCED IN WHOLE OR IN PART WITHOUT THE EXPRESS WRITTEN PERMISSION OF KAD

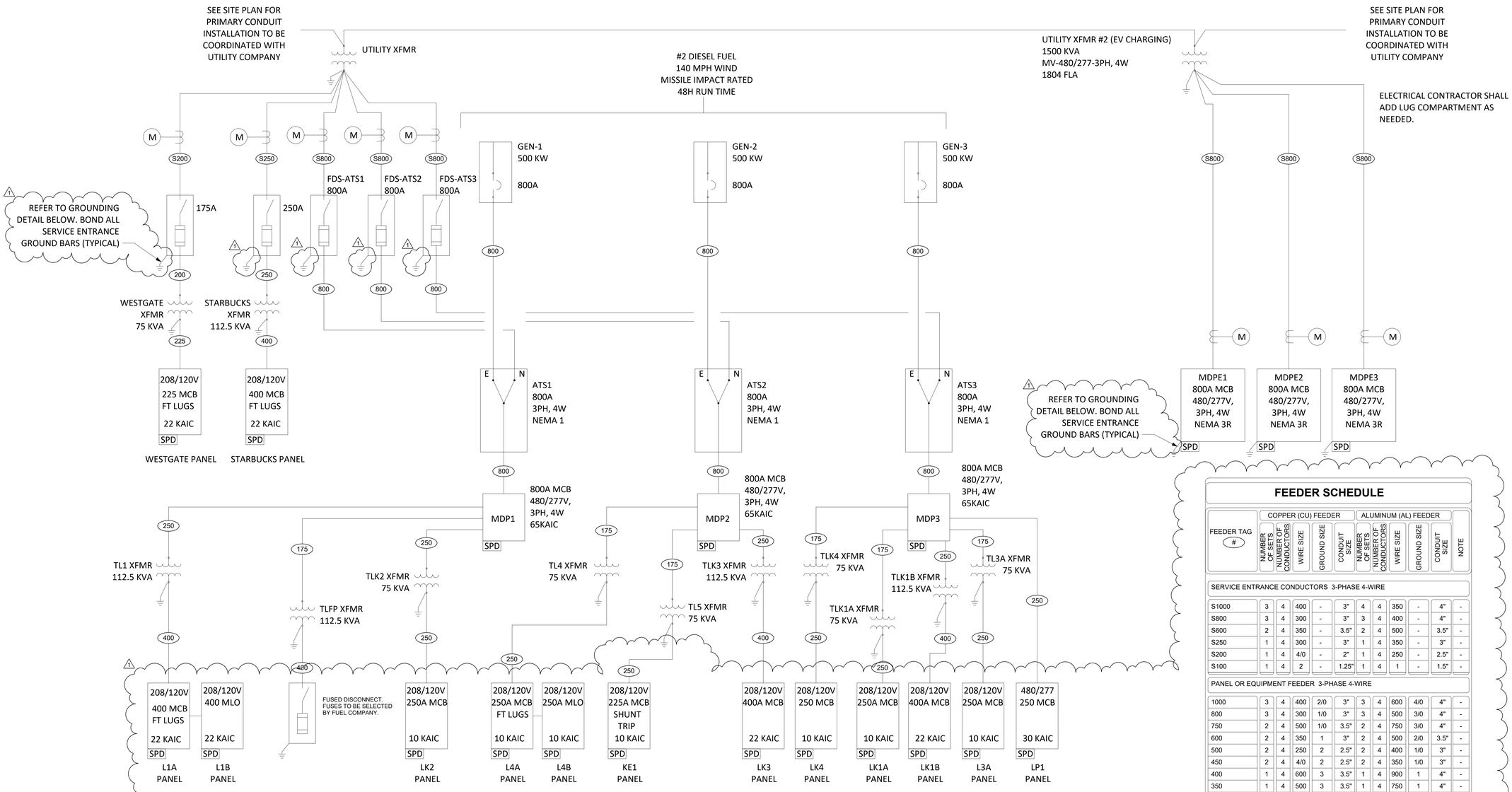

FEEDER SCHEDULE

FEEDER TAG #	COPPER (CU) FEEDER NUMBER OF SETS	COPPER (CU) FEEDER NUMBER OF CONDUCTORS	COPPER (CU) FEEDER WIRE SIZE	COPPER (CU) FEEDER GROUND SIZE	COPPER (CU) FEEDER CONDUIT SIZE	ALUMINUM (AL) FEEDER NUMBER OF SETS	ALUMINUM (AL) FEEDER NUMBER OF CONDUCTORS	ALUMINUM (AL) FEEDER WIRE SIZE	ALUMINUM (AL) FEEDER GROUND SIZE	ALUMINUM (AL) FEEDER CONDUIT SIZE	NOTE
SERVICE ENTRANCE CONDUCTORS 3-PHASE 4-WIRE											
S1000	3	4	400	-	3"	4	4	350	-	4"	-
S800	3	4	300	-	3"	3	4	400	-	4"	-
S600	2	4	350	-	3.5"	2	4	500	-	3.5"	-
S250	1	4	300	-	3"	1	4	350	-	3"	-
S200	1	4	4/0	-	2"	1	4	250	-	2.5"	-
S100	1	4	2	-	1.25"	1	4	1	-	1.5"	-
PANEL OR EQUIPMENT FEEDER 3-PHASE 4-WIRE											
1000	3	4	400	2/0	3"	3	4	600	4/0	4"	-
800	3	4	300	1/0	3"	3	4	500	3/0	4"	-
750	2	4	500	1/0	3.5"	2	4	750	3/0	4"	-
600	2	4	350	1	3"	2	4	500	2/0	3.5"	-
500	2	4	250	2	2.5"	2	4	400	1/0	3"	-
450	2	4	4/0	2	2.5"	2	4	350	1/0	3"	-
400	1	4	600	3	3.5"	1	4	900	1	4"	-
350	1	4	500	3	3.5"	1	4	750	1	4"	-
300	1	4	350	4	3"	1	4	500	2	3.5"	-
250	1	4	250	4	2.5"	1	4	400	2	3"	-
225	1	4	4/0	4	2.5"	1	4	350	2	3"	-
200	1	4	3/0	6	2"	1	4	250	4	2.5"	-
175	1	4	2/0	6	2"	1	4	4/0	4	2.5"	-
150	1	4	1/0	6	2"	1	4	3/0	4	2"	-
125	1	4	1	6	1.5"	1	4	2/0	4	2"	-
110	1	4	2	6	1.25"	1	4	2/0	4	2"	-

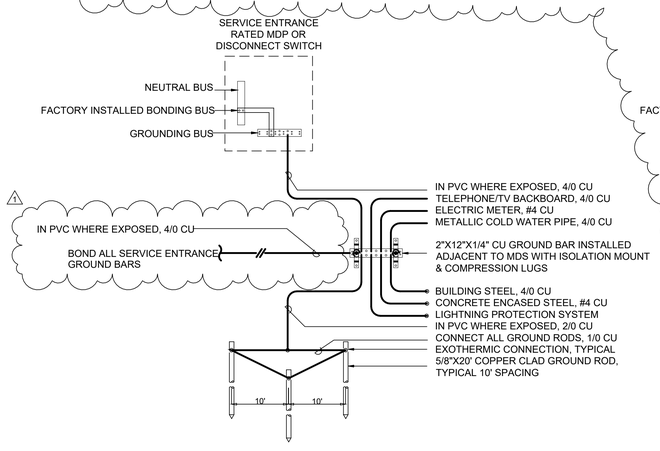

2 E0.5 BUILDING GROUNDING SYSTEM

SCALE: 1/4" = 1'-0"

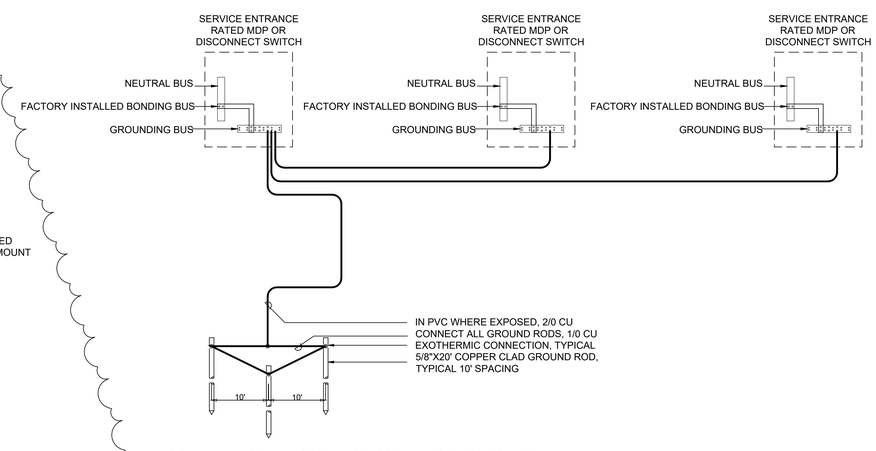

4 E0.5 EV CHARGIN GROUNDING SYSTEM

SCALE: 1/4" = 1'-0"

CONDUCTOR VOLTAGE DROP SUMMARY @3% VD; 75°C WIRE; 16A. Max. Current			
AWG (#)	SINGLE PHASE (V)	THREE PHASE (V)	MAXIMUM CONDUCTOR LENGTH (FT.)
12	120	-	57
12	208	-	99
12	-	208	114
12	277	-	132
12	-	480	262
10	120	-	91
10	208	-	157
10	-	208	182
10	277	-	209
10	-	480	419
8	120	-	145
8	208	-	251
8	-	208	289
8	277	-	333
8	-	480	668

kasper architects + assoc.
10175 Fortune Parkway, Suite 701
Jacksonville, FL 32256
p 904.683.9201 f 904.683.9702
www.kasperarch.com
FL License No.: AA26000802

IMEG
formerly McVeigh & Mangum Engineering
www.IMEGCorp.com
9133 R.G. Skinner Parkway
Jacksonville, Florida 32256
Ph: (904) 483-5200 Fax: (904) 636-6700
email: mail@McVeighMangum.com
CA 6330
Eng. of Record: Thomas C. Nielsen
License No.: 53492

1 ALL DESIGN PRIOR TO 08/28/2025 WAS PERFORMED BY IMEG UNDER THE RESPONSIBLE CHARGE OF THOMAS C. NIELSEN, PE #53492.
ALL SUBSEQUENT DESIGN BY IMEG IS UNDER THE RESPONSIBLE CHARGE OF BRIAN J. LEAVITT, PE #87733.

BRIAN JOSEPH LEAVITT
LICENSE
No. 87733
STATE OF FLORIDA
PROFESSIONAL ENGINEER

Digitally signed by Brian Leavitt
Reason: This item has been electronically signed and sealed by Brian J. Leavitt, PE using a Digital Signature. Printed copies of this document are not considered signed and sealed and the signature must be verified on any electronic copies.
Date: 2025.08.28 14:52:56-05'00'

BUSY BEE ELLISVILLE

136 SW WEBBS GLN
LAKE CITY, FL 32024

PROJECT NO.: 22024
DATE: 06/02/2025
PRIOR ISSUES:
1 08/24/2025 ASI #1

ELECTRICAL SINGLE LINE DIAGRAM

E0.5

DRAWN BY: IMEG
CHECKED BY: IMEG

100% CONSTRUCTION DOCUMENTS

© 2013

ALL REPORTS, SPECIFICATIONS, COMPUTER FILES, FIELD DATA, AND OTHER DOCUMENTATION PREPARED BY KASPER ARCHITECTURE & DEVELOPMENT, INC. (KAD) AS INSTRUMENTS OF SERVICE SHALL REMAIN THE PROPERTY OF KAD. KAD SHALL RETAIN ALL COMMON LAW, STATUTORY AND OTHER RESERVED RIGHTS, INCLUDING THE COPYRIGHT THERETO. THIS DRAWING SHALL NEVER BE REPRODUCED IN WHOLE OR IN PART WITHOUT THE EXPRESS WRITTEN PERMISSION OF KAD.

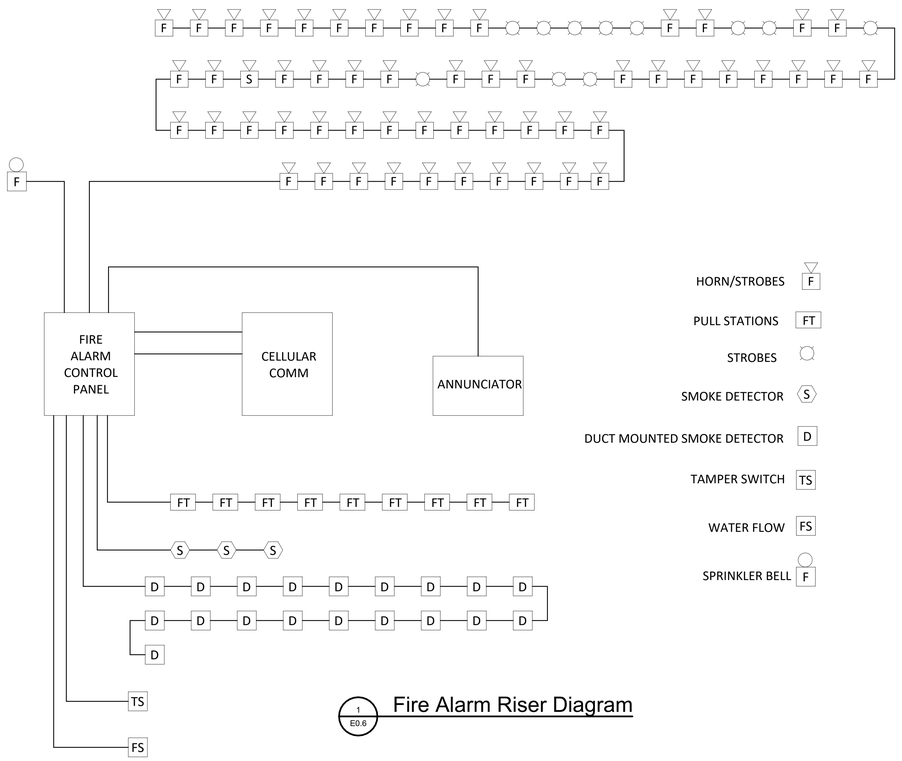

HORN/STROBES F
PULL STATIONS FT
STROBES
SMOKE DETECTOR S
DUCT MOUNTED SMOKE DETECTOR D
TAMPER SWITCH TS
WATER FLOW FS
SPRINKLER BELL F

1 / E0.6 Fire Alarm Riser Diagram

SYSTEM INPUTS \ SEQUENCE OF OPERATION		PANEL/ANNUNCIATOR ALARM INDICATION	PANEL/ANNUNCIATOR SUPERVISORY INDICATION	PANEL/ANNUNCIATOR TROUBLE INDICATION	AUDIBLE ALARMS SEQUENCE	VISUAL ALARMS SEQUENCE	## ELECTRIC SPRINKLER BELL SEQUENCE	## AHU & MECHANICAL FAN SHUTDOWN SEQUENCE	## RELEASE AGENT DISCHARGE SEQUENCE	## LIGHTING CONTROL OVERRIDE SEQUENCE	## ACCESS CONTROL OVERRIDE SEQUENCE
FIRE ALARM PANEL, TRANSPONDER, NAC PANEL LOW BATTERY			X								
FIRE ALARM PANEL, TRANSPONDER, NAC PANEL BATTERY OR CHARGER FAILURE				X							
FIRE ALARM PANEL, TRANSPONDER, NAC PANEL ABNORMAL SWITCH OR CONTROL POSITION.			X								
FIRE ALARM PANEL, TRANSPONDER, NAC PANEL GROUND FAULT, OPEN CIRCUIT, SHORT CIRCUIT				X							
FIRE ALARM PANEL, TRANSPONDER, NAC PANEL AC POWER LOSS OR IRREGULARITY				X							
NOTIFICATION APPLIANCE CIRCUIT OR SLC LOOP GROUND FAULT, OPEN CIRCUIT, SHORT CIRCUIT				X							
INITIATING DEVICE FAILURE OR COMMUNICATION ERROR				X							
FIRE ALARM PANEL MANUAL FIRE DRILL			X		X	X				X	X
MANUAL PULL STATION	FT F	X			X	X		X		X	X
SMOKE DETECTOR	S #/_ S #/_	X			X	X		X		X	X
HEAT DETECTOR	H #/_ H #/_ H #/_	X			X	X		X		X	X
SPRINKLER SYSTEM FLOW SWITCH	MM FS	X			X	X	X	X		X	X
SPRINKLER SYSTEM MONITOR SWITCH	MM TS PIV		X								
SMOKE DETECTOR FOR HVAC CONTROL	S #/ S #/_ S	X	X	X	X	X		X		X	X
KITCHEN HOOD SUPPRESSION SYSTEM ACTIVATION	MM	X	X	X	X	X					
RELEASE AGENT SYSTEM PANEL ALARM	MM	X			X	X		X	X	X	X
RELEASE AGENT SYSTEM PANEL TROUBLE	MM			X							
SPECIALTY DETECTOR (i.e., FLAME)	X	X			X	X		X		X	X

NOTES:

1. ALL SYSTEM EVENTS SHALL BE LOGGED AND DISPLAYED ON THE ANNUNCIATOR INTERFACE, IF APPLICABLE.
2. RELOCATION OF OCCUPANTS IS THE STANDARD OPERATING PROCEDURE FOR THIS FACILITY IN THE EVENT OF AN ALARM. THEREFORE, ALL NOTIFICATION APPLIANCE CIRCUITS MUST BE INSTALLED AND PROTECTED IN ACCORDANCE WITH THE CIRCUIT SURVIVABILITY REQUIREMENTS DESCRIBED IN NFPA 72.

KEYNOTES:

1. UTILIZE A GENERAL PURPOSE RELAY TO MONITOR POWER LOSS. CONNECT THE CONTACTS OF THE RELAY TO A FIRE ALARM MONITOR MODULE.
2. UTILIZE (3) GENERAL PURPOSE RELAYS AS SHOWN ON DRAWINGS WITH A COIL VOLTAGE THAT MATCHES THE MOTOR VOLTAGE TO MONITOR POWER LOSS. CONNECT EACH RELAY COIL TO ONE PHASE OF THE MOTOR FEEDER DOWNSTREAM OF THE DISCONNECTING MEANS, BUT AHEAD OF THE CONTROL CONTACTOR. CONNECT THE CONTACTS OF THE RELAYS IN SERIES TO A FIRE ALARM MONITOR MODULE.

3 / E0.6 FIRE ALARM OPERATION MATRIX

FAC 61G15-32 FIRE PROTECTION (ALARM) CRITERIA

61G15-32.008

(1) OVERALL DESCRIPTION

PROVIDE SUPERVISION OF WET-PIPE SPRINKLER SYSTEM VIA TAMPER AND FLOW SWITCHES. PROVIDE SUPERVISION OF THE FIRE ALARM CONTROL PANEL'S POWER FROM BOTH THE DEDICATED 120VAC LINE AND THE INTERNAL BATTERY LINE. PROVIDE ACTIVATION OF ALL DOOR LOCKS FOR SAFE EGRESS FROM THE BUILDING WHEN IN ALARM. PROVIDE ANNUNCIATION OF THE FIRE ALARM SYSTEM VIA AUDIBLE/VISUAL DEVICES LOCATED THROUGHOUT NORMALLY OCCUPIED SPACES.

(2) GOVERNING CODES

THE FIRE ALARM SYSTEM SHALL MEET ALL OF THE REQUIREMENTS OF THE LATEST APPLICABLE EDITIONS OF THE FLORIDA BUILDING CODE, THE FLORDIA FIRE PREVENTION CODE, NFPA 72, ADA, AND ALL LOCAL, NATIONAL, AND INTERNATIONAL CODES. THE FIRE ALARM SYSTEM SHALL MEET ALL OF THE REQUIREMENTS OF THE LOCAL AUTHORITY HAVING JURISDICTION.

(3) MINIMUM SYSTEM REQUIREMENTS

THE ENGINEERING DRAWINGS CONTAINED HEREIN IDENTIFY MINIMUM FIRE ALARM SYSTEM REQUIREMENTS. ALL FIRE ALARM SWITCHES, MODULES, AND WIRING SHALL BE PROVIDED BY THE FIRE ALARM SUB-CONTRACTOR. FIRE ALARM SYSTEM SUB-CONTRACTOR SHALL BE RESPONSIBLE TO SUBMIT DETAILED SYSTEM DRAWINGS, CUTSHEETS, WIRING DIAGRAMS, ETC. AS REQUIRED FOR FINAL PERMITTING.

(4) PLAN REQUIREMENTS

MINIMUM SYSTEM REQUIREMENTS ARE SHOWN ON THE ENGINEERING DRAWINGS CONTAINED HEREIN:

a. SYMBOLS LEGEND IS INDICATED ON E0.01a. SYSTEM RISER DIAGRAM WITH ALL INITIATION AND NOTIFICATION COMPONENTS AND CABLING REQUIREMENTS IS INDICATED IN DETAIL 1/0.06, THIS SHEET. ANY FIRE-RATED WALLS HAVE BEEN INDICATED BY LINE-TYPE OF THE WALLS ON THE ARCHITECTURALPLANS. THE BUILDING IS A 1-STORY MIXED USE BUILDING AND IS APPROX. 40,000SF NEW CONSTRUCTION..
b. LOCATIONS OF INITIATION AND NOTIFICATION DEVICES AND CONNECTIONS TO RELATED SYSTEMS ARE SHOWN IN PLAN 1/E1.5. EXTERIOR BELL (OR OTHER AUDIBLE DEVICE) REQUIRED BY NFPA 13 SHALL BE PROVIDED AT LOCATION ACCEPTABLE TO THE FIRE MARSHAL. ADDITIONAL DEVICES SHALL BE INCLUDED IN THE BID AND PROVIDED AS DIRECTED BY THE FIRE MARSHAL.
c. STROBE INTENSITY AND AUDIBLE OUTPUT RATINGS FOR ALL NOTIFICATION DEVICES ARE 75cd AND 90dBA, UON. STROBES MAY BE 15cd IN 20 FT WIDE OR NARROWER CORRIDORS. LOWER VISUAL INTENSITIES THAN 75cd ARE ALLOWED AS LONG AS THE ENTIRE NORMALLY OCCUPIED SPACE IS COVERED ACCORDING TO NFPA 72 VISUAL DEVICE CHARACTERISTICS. THE VISUAL AND AUDIBLE INTENSITY SHALL BE INCREASED WHERE REQUIRED FOR COMPLETE COVERAGE OF NORMALLY OCCUPIED SPACE.
d. INITIATING DEVICE CIRCUITS, SIGNAL LINE CIRCUITS, AND NOTIFICATION APPLIANCE CIRCUITS SHALL BE CLASS B.
e. THE ALARM SYSTEM SHALL RECEIVE INITIATION SIGNALS AND PROVIDE NOTIFICATION SIGNALS AS SHOWN IN THE FIRE ALARM RISER AND OPERATIONS MATRIX. THE TRANSMISSION OF EMERGENCY SIGNALS SHALL BE BY DUAL LINE TELEPHONE CONNECTION TO UL LISTED CENTRAL STATION. ALL ALARM, TROUBLE AND SUPERVISORY CONDITIONS SHALL BE TRANSMITTED TO THE CENTRAL STATION.
f. THE FIRE ALARM SYSTEM TYPE SHALL BE ADDRESSABLE, 24VDC, POWER LIMITED, FULLY SUPERVISED, WITH 5 MINUTE ALARM, 24 HOUR STANDBY BATTERY SYSTEM.
g. SURGE PROTECTIVE DEVICES SHALL BE LOCATED ON THE INCOMING AC POWER (ADJACENT TO OR WITHIN THE PANEL) AND THE POINT OF ENTRY TO THE BUILDING FOR ANY EXTERIOR CIRCUITS.
h. THE FIRE ALARM CONTROL PANEL SHALL BE LOCATED IN 32°F TO 104°F NON-CONDENSING. ANY OUTDOOR NOTIFICATION DEVICES SHALL BE WEATHER PROOF.
i. A SITE PLAN HAS BEEN PROVIDED ON E1.0.
j. SMOKE DETECTION IS REQUIRED FOR THIS BUILDING AT THE FIRE ALARM CONTROL PANEL AND HVAC SYSTEMS OVER 2,000 CFM.
k. SMOKE STRATIFICATION IS NOT APPLICABLE TO THIS CONSTRUCTION.
l. THIS PERFORMANCE BASED CRITERIA SHALL PROVIDE THE BASIS OF DESIGN FOR THE FULL FIRE ALARM PERMIT DOCUMENTS AND MEET THE LOCAL AHJ'S REQUIREMENTS. NOTE THAT FIRE ALARM PLANS SUBMITTED HEREIN FOR BUILDING PERMIT ARE NOT PART OF THE FIRE ALARM PERMIT REVIEW. A SEPARATE SUBMITTAL AND PERMIT IS REQUIRED TO BE PROVIDED BY THE CONTRACTOR FOR THE FIRE ALARM SYSTEM MEETING ALL OF THE LOCAL AHJ'S REQUIREMENTS. IF REQUIRED BY THE AHJ, FIRE ALARM PERMIT DRAWINGS SHALL BE SIGNED AND SEALED BY 3RD PARTY PROFESSIONAL ENGINEER.
m. THE CONSTRUCTION IS NOT HIGH-RISE OR MULTI-TENANT. THE ENTIRE BUILDING SHALL HAVE A GENERAL EVACUATION SIGNAL.
n. WIRING FOR UNDERGROUND AND WET LOCATIONS SHALL BE AS RECOMMENDED BY THE MANUFACTURER. ANY EXTERIOR CIRCUITS SHALL BE INSTALLED IN CONDUIT, MINIMUM 18" BELOW GRADE WITH ORANGE WARNING TAPE ABOVE THE CONDUIT.
o. SUBMIT OPERATION AND MAINTENANCE PROCEDURES AND MANUALS. VENDOR TO PROVIDE FULL OPERATION & MAINTENANCE MANUALS AND AS-BUILT PLANS FOR OWNER'S FUTURE USE. VENDOR TO SUBMIT TO OWNER PROPOSED CONTRACT FOR REQUIRED ANNUAL TESTING OF THE SYSTEM. A MINIMUM OF TWO, ONE-HOUR ON-SITE TRAINING SESSIONS FOR SYSTEM OPERATION SHALL BE PROVIDED TO THE OWNER.

(5) WIRING, BATTERY, VOLTAGE DROP RESPONSIBILTY:

THE FIRE ALARM SHOP DRAWINGS SHALL INDICATE THE WIRING TO BE PROVIDED, BATTERY AND VOLTAGE DROP (CIRCUIT ANALYSIS) CALCULATIONS. THE CALCULATIONS SHALL APPLY THE MANUFACTURER'S DATA AND APPLICABLE NFPA 72 PROCEDURES.

(6) SYSTEM TEST REQUIREMENTS:

VENDOR SHALL FULLY TEST AND CERTIFY THE FIRE ALARM SYSTEM DOCUMENTING PROPER FUNCTION OF ALL DEVICES, INTERLOCKS, PROGRAMMING AND COMMUNICATIONS PROVIDING A FIRE ALARM SYSTEM RECORD OF COMPLETION AS REQUIRED BY NFPA 72, CHAPTER 10.

(7) SPECIAL SYSTEM REQUIREMENTS:

PROVIDE FIRE ALARM DOCUMENT CABINET ADJACENT TO MAIN FIRE ALARM PANEL.

THERE ARE NO OWNER, INSURANCE UNDERWRITER, OR LOCAL FIRE CODE AMENDMENTS REQUIRED FOR THIS CONSTRUCTION.

2 / E0.6 Fire Alarm Criteria

kasper architects + assoc.
10175 Fortune Parkway, Suite 701
Jacksonville, FL 32256
p 904.683.9201 f 904.683.9702
www.kasperarch.com
FL License No.: AA26000802

IMEG
formerly McVeigh & Mangum Engineering
www.IMEGCorp.com
9133 R.G. Skinner Parkway
Jacksonville, Florida 32256
Ph: (904) 483-5200 Fax: (904) 636-6700
email: mail@McVeighMangum.com
CA 6330
Eng. of Record:
License No.:

1 ALL DESIGN PRIOR TO 08/28/2025 WAS PERFORMED BY IMEG UNDER THE RESPONSIBLE CHARGE OF THOMAS C. NIELSEN, PE #53492. ALL SUBSEQUENT DESIGN BY IMEG IS UNDER THE RESPONSIBLE CHARGE OF BRIAN J. LEAVITT, PE #87733.

BRIAN JOSEPH LEAVITT LICENSE No. 87733 STATE OF FLORIDA PROFESSIONAL ENGINEER

Brian Leavitt

Digitally signed by Brian Leavitt
Reason: This item has been electronically signed and sealed by Brian J. Leavitt PE using a Digital Signature and date. Printed copies of this document are not considered signed and sealed and the signature must be verified on any electronic copies.
Date: 2025.08.28 14:53:15-05'00'

BUSY BEE ELLISVILLE

136 SW WEBBS GLN
LAKE CITY, FL 32024

PROJECT NO.:	22024
DATE:	06/02/2025

PRIOR ISSUES:

1	08/24/2025	ASI #1

FIRE ALARM RISER DIAGRAM

E0.6

DRAWN BY:	IMEG
CHECKED BY:	IMEG

100% CONSTRUCTION DOCUMENTS

© 2013

ALL REPORTS, SPECIFICATIONS, COMPUTER FILES, FIELD DATA, AND OTHER DOCUMENTATION PREPARED BY KASPER ARCHITECTURE & DEVELOPMENT, INC. (KAD) AS INSTRUMENTS OF SERVICE SHALL REMAIN THE PROPERTY OF KAD. KAD SHALL RETAIN ALL COMMON LAW, STATUTORY AND OTHER RESERVED RIGHTS, INCLUDING THE COPYRIGHT THERETO. THIS DRAWING SHALL NEVER BE REPRODUCED IN WHOLE OR IN PART WITHOUT THE EXPRESS WRITTEN PERMISSION OF KAD.

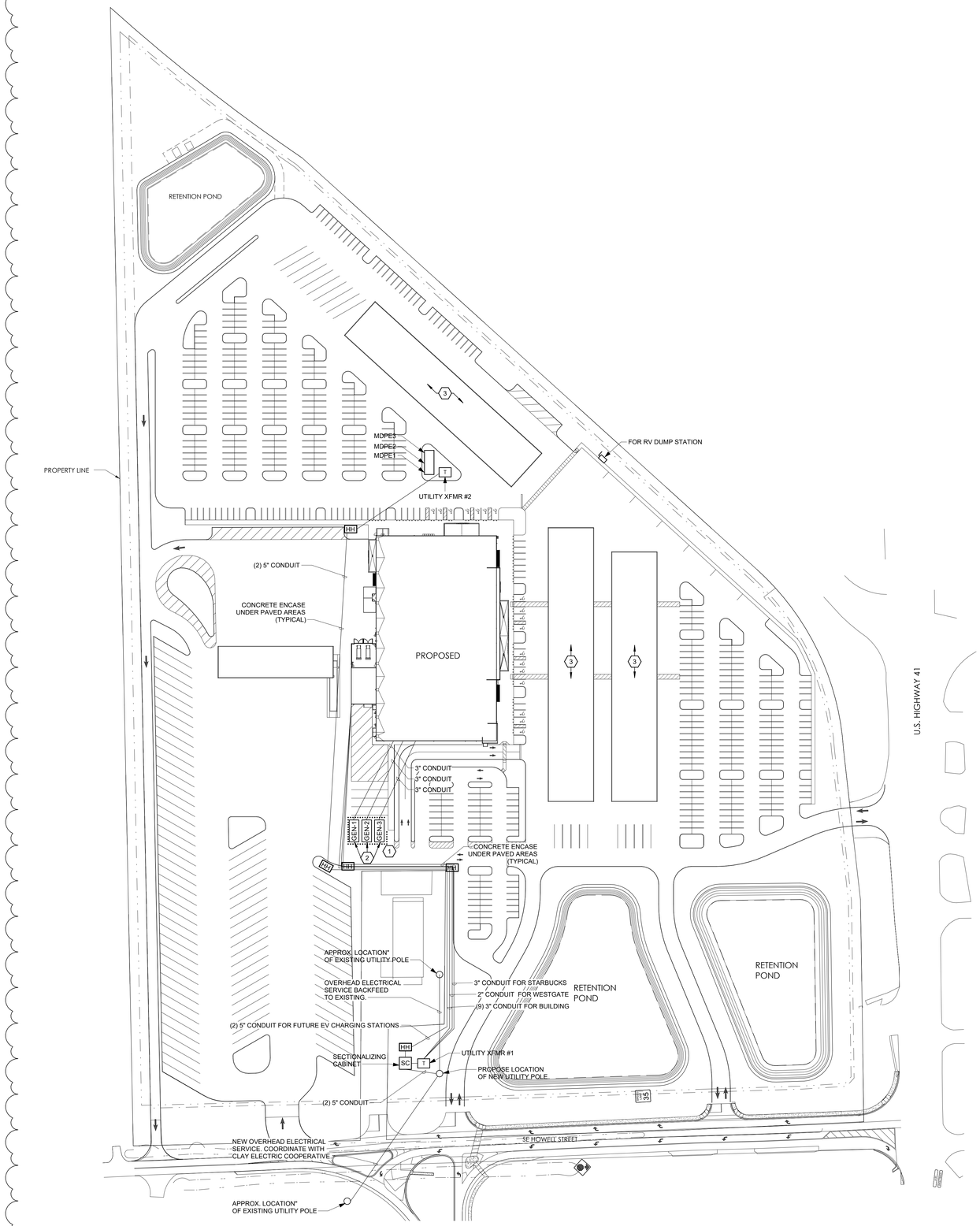

1 E1.0 ELECTRICAL SITE POWER PLAN

SCALE: 1" = 80'-0"

GENERAL NOTES:

A. COORDINATE WITH CIVIL AND VERIFY LOCATIONS OF ALL EXISTING AND PROPOSED UTILITIES PRIOR TO THE START OF WORK.
B. ALL CONDUITS UNDER PAVED AREAS TO BE CONCRETE ENCASED.

KEY NOTES:

1. 8" X 8'-0" ROUND STEEL CONCRETE FILLED BOLLARDS PAINTED D.O.T. YELLOW AND BURRIED 4'-0", TYPICAL.
2. PROVIDE 500KW STANDBY RATED GENERATORS WITH WEATHERPROOF ENCLOSURE AND INTEGRAL TANK SIZED FOR 48 HOUR RUNTIME. PROVIDE REMOTE ANNUNCIATOR IN MAIN ELECTRICAL ROOM. PROVIDE ALL CONTROL WIRING AND 120V CIRCUITS REQUIRED FOR BATTERY CHARGER, INTERNAL LIGHTS, LOCAL RECEPTACLE, AND BLOCK HEATER. COORDINATE PAD REQUIREMENTS WITH GENERATOR SUPPLIER.
3. FUELING ISLAND POWER AND LIGHTING PROVIDED UNDER SEPARATE CONTRACT.

kasper architects + assoc.
10175 Fortune Parkway, Suite 701
Jacksonville, FL 32256
p 904.683.9201 f 904.683.9702
www.kasperarch.com
FL License No.: AA26000802

IMEG
formerly McVeigh & Mangum Engineering
www.IMEGCorp.com
9133 R.G. Skinner Parkway
Jacksonville, Florida 32256
Ph: (904) 483-5200 Fax: (904) 636-6700
email: mail@McVeighMangum.com
CA 6330
Eng. of Record:
License No.:

1 ALL DESIGN PRIOR TO 08/28/2025 WAS PERFORMED BY IMEG UNDER THE RESPONSIBLE CHARGE OF THOMAS C. NIELSEN, PE #53492. ALL SUBSEQUENT DESIGN BY IMEG IS UNDER THE RESPONSIBLE CHARGE OF BRIAN J. LEAVITT, PE #87733.

BRIAN JOSEPH LEAVITT
LICENSE
No. 87733
STATE OF FLORIDA
PROFESSIONAL ENGINEER

Brian Leavitt

Digitally signed by Brian Leavitt
Reason: This document has been electronically signed and sealed by Brian J. Leavitt PE using a Digital Signature and Seal. Printed copies of this document are not considered signed and sealed and the signature must be verified on any electronic copies.
Date: 2025.08.28 14:53:34-05'00'

BUSY BEE ELLISVILLE

136 SW WEBBS GLN
LAKE CITY, FL 32024

PROJECT NO.:	22024
DATE:	06/02/2025
PRIOR ISSUES:	
1	08/24/2025 ASI #1

ELECTRICAL SITE POWER PLAN

E1.0

DRAWN BY:	IMEG
CHECKED BY:	IMEG

100% CONSTRUCTION DOCUMENTS

© 2013

ALL REPORTS, SPECIFICATIONS, COMPUTER FILES, FIELD DATA, AND OTHER DOCUMENTATION PREPARED BY KASPER ARCHITECTURE & DEVELOPMENT, INC. (KAD) AS INSTRUMENTS OF SERVICE SHALL REMAIN THE PROPERTY OF KAD. KAD SHALL RETAIN ALL COMMON LAW, STATUTORY AND OTHER RESERVED RIGHTS, INCLUDING THE COPYRIGHT THERETO. THIS DRAWING SHALL NEVER BE REPRODUCED IN WHOLE OR IN PART WITHOUT THE EXPRESS WRITTEN PERMISSION OF KAD.

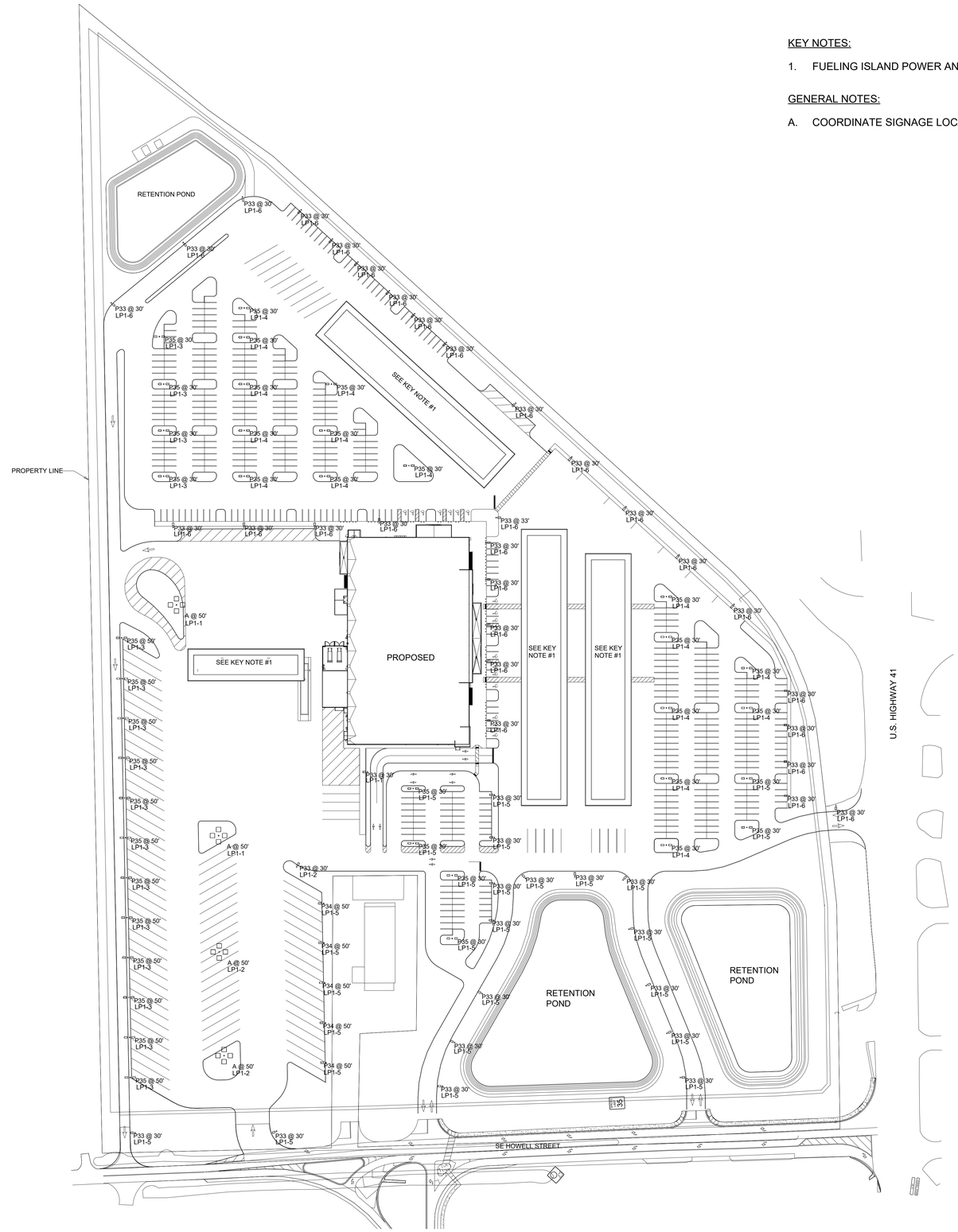

2 E1.1 SITE LIGHTING PLAN

SCALE: 1" = 80'-0"

KEY NOTES:

1. FUELING ISLAND POWER AND LIGHTING PROVIDED UNDER SEPARATE CONTRACT.

GENERAL NOTES:

A. COORDINATE SIGNAGE LOCATIONS AND REQUIREMENTS WITH OWNER.

kasper architects + assoc.
10175 Fortune Parkway, Suite 701
Jacksonville, FL 32256
p 904.683.9201 f 904.683.9702
www.kasperarch.com
FL License No.: AA26000802

IMEG
formerly McVeigh & Mangum Engineering
www.IMEGCorp.com
9133 R.G. Skinner Parkway
Jacksonville, Florida 32256
Ph: (904) 483-5200 Fax: (904) 636-6700
email: mail@McVeighMangum.com
CA 6330
Eng. of Record: Thomas C. Nielsen
License No.: 53492

1 ALL DESIGN PRIOR TO 08/28/2025 WAS PERFORMED BY IMEG UNDER THE RESPONSIBLE CHARGE OF THOMAS C. NIELSEN, PE #53492. ALL SUBSEQUENT DESIGN BY IMEG IS UNDER THE RESPONSIBLE CHARGE OF BRIAN J. LEAVITT, PE #87733.

BRIAN JOSEPH LEAVITT
LICENSE
No. 87733
STATE OF FLORIDA
PROFESSIONAL ENGINEER

Brian Leavitt

Digitally signed by Brian Leavitt
Reason: This item has been electronically signed and sealed by Brian J. Leavitt, PE using a Digital Signature on the date. Printed copies of this document are not considered signed and sealed and the signature must be verified on any electronic copies.
Date: 2025.08.28 14:53:51-05'00'

BUSY BEE ELLISVILLE

136 SW WEBBS GLN
LAKE CITY, FL 32024

PROJECT NO.:	22024
DATE:	06/02/2025

PRIOR ISSUES:

1	08/24/2025	ASI #1

SITE LIGHTING PLAN

E1.1

DRAWN BY:	IMEG
CHECKED BY:	IMEG

100% CONSTRUCTION DOCUMENTS

© 2013

ALL REPORTS, SPECIFICATIONS, COMPUTER FILES, FIELD DATA AND OTHER DOCUMENTATION PREPARED BY KASPER ARCHITECTURE & DEVELOPMENT, INC. (KAD) AS INSTRUMENTS OF SERVICE SHALL REMAIN THE PROPERTY OF KAD. KAD SHALL RETAIN ALL COMMON LAW, STATUTORY AND OTHER RESERVED RIGHTS, INCLUDING THE COPYRIGHT THERETO. THIS DRAWING SHALL NEVER BE REPRODUCED IN WHOLE OR IN PART WITHOUT THE EXPRESS WRITTEN PERMISSION OF KAD.

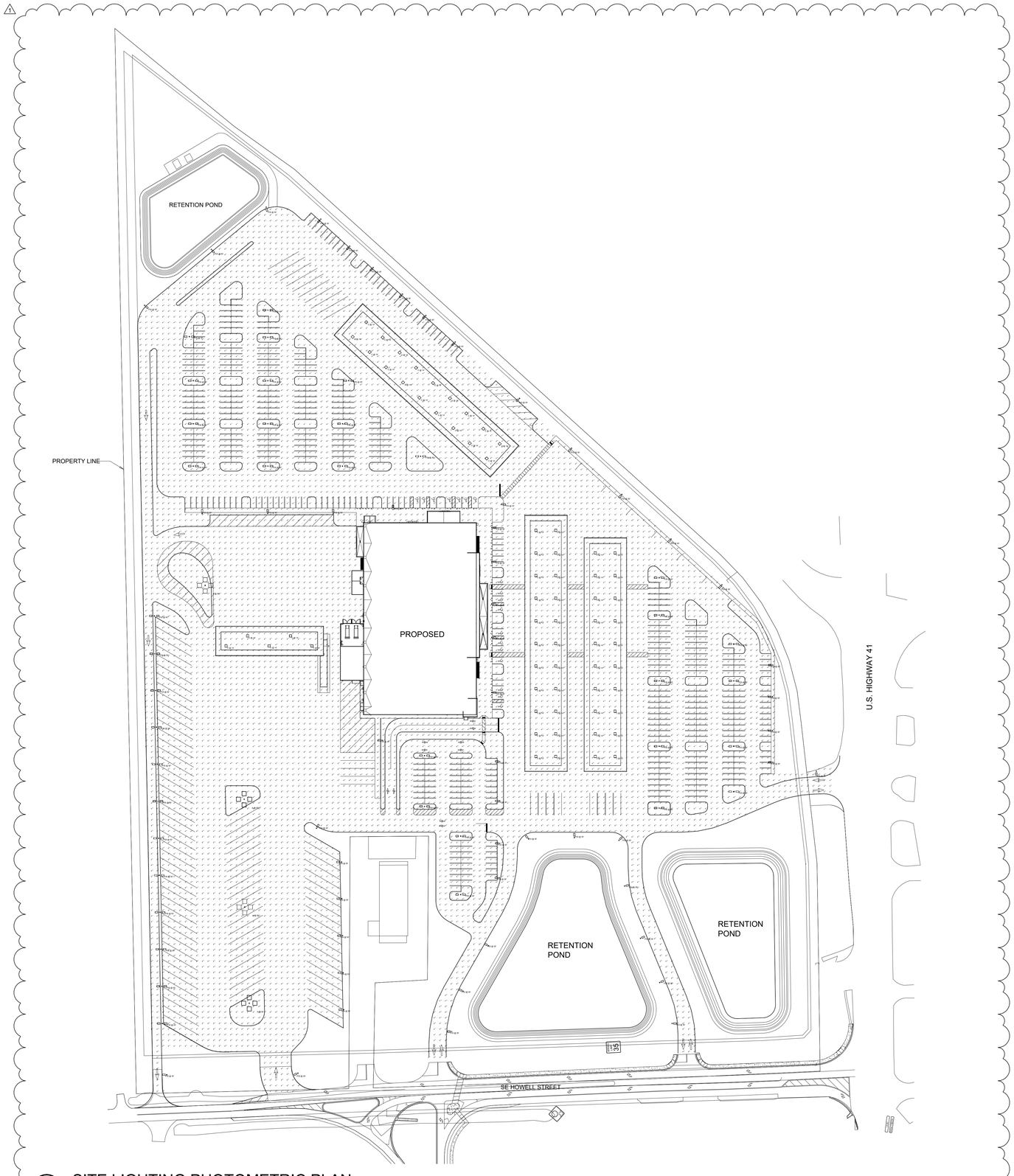

2
E1.2

SITE LIGHTING PHOTOMETRIC PLAN

SCALE: 1" = 80'-0"

kasper architects + assoc.
10175 Fortune Parkway, Suite 701
Jacksonville, FL 32256
p 904.683.9201 f 904.683.9702

www.kasperarch.com
FL License No.: AA26000802

IMEG
formerly McVeigh & Mangum Engineering
www.IMEGCorp.com
9133 R.G. Skinner Parkway
Jacksonville, Florida 32256
Ph: (904) 483-5200 Fax: (904) 636-6700
email: mail@McVeighMangum.com
CA 6330
Eng. of Record:
License No.:

1 ALL DESIGN PRIOR TO 08/28/2025 WAS PERFORMED BY IMEG UNDER THE RESPONSIBLE CHARGE OF THOMAS C. NIELSEN, PE #53492.
ALL SUBSEQUENT DESIGN BY IMEG IS UNDER THE RESPONSIBLE CHARGE OF BRIAN J. LEAVITT, PE #87733.

BRIAN JOSEPH LEAVITT
LICENSE
No. 87733
STATE OF FLORIDA
PROFESSIONAL ENGINEER

Brian Leavitt

Digitally signed by Brian Leavitt
Reason: This item has been electronically signed and sealed by Brian J. Leavitt, PE using a Digital Signature. Printed copies of this document are not considered signed and sealed and the signature must be verified on any electronic copies.
Date: 2025.08.28 14:54:07-05'00'

BUSY BEE ELLISVILLE

136 SW WEBBS GLN
LAKE CITY, FL 32024

PROJECT NO.:	22024
DATE:	06/02/2025
PRIOR ISSUES:	
1	08/24/2025 ASI #1

SITE LIGHTING PHOTOMETRIC PLAN

E1.2

DRAWN BY:	IMEG
CHECKED BY:	IMEG

100% CONSTRUCTION DOCUMENTS

© 2013

ALL REPORTS, SPECIFICATIONS, COMPUTER FILES, FIELD DATA, AND OTHER DOCUMENTATION PREPARED BY KASPER ARCHITECTURE & DEVELOPMENT, INC. (KAD) AS INSTRUMENTS OF SERVICE SHALL REMAIN THE PROPERTY OF KAD. KAD SHALL RETAIN ALL COMMON LAW, STATUTORY AND OTHER RESERVED RIGHTS, INCLUDING THE COPYRIGHT THERETO. THIS DRAWING SHALL NEVER BE REPRODUCED IN WHOLE OR IN PART WITHOUT THE EXPRESS WRITTEN PERMISSION OF KAD.

SHEET NOTES:
1. COORDINATE ALL TV RECEPTACLE EXACT LOCATION AND HEIGHTS WITH THE ARCHITECTURE PLANS.
2. COORDINATE SIGNAGE LOCATIONS AND REQUIREMENTS WITH OWNER. PROVIDE LOCAL DISCONNECT PER NEC.

KEY NOTES:
1. PROVIDE POWER CONNECTION TO COOLER CONDENSING UNITS FROM PANEL L1B. COORDINATE EXACT REQUIREMENTS WITH EQUIPMENT VENDOR.
2. FOR TENANT, PROVIDE 2-1/2"C FOR POWER TO MAIN ELECTRICAL ROOM, 2"C TO MAIN DATA ROOM, 1-1/2"C TO FIRE ALARM CONTROL PANEL. VERIFY LOCATIONS WITH LANDLORD PRIOR TO INSTALL.
3. PROVIDE 120V POWER CONNECTION TO SECURITY GRILLE OPERATOR. PROVIDE LOCAL DISCONNECT SWITCH PER NEC. COORDINATE EXACT LOCATIONS AND REQUIREMENTS WITH EQUIPMENT PROVIDER.
4. PROVIDE 120V POWER CONNECTION TO 'BUSY BEE' SIGN. PROVIDE LOCAL TOGGLE SWITCH AS DISCONNECT. COORDINATE EXACT LOCATIONS AND REQUIREMENTS WITH SIGN SUPPLIER.
5. PROVIDE POWER CONNECTION TO INDOOR SPLIT SYSTEM UNIT (DSS-1). UNIT TO BE POWERED FROM ASSOCIATED OUTDOOR UNIT (DCU-1). PROVIDE MOTOR RATED TOGGLE SWITCH AS DISCONNECT.
6. PROVIDE RECEPTACLE(S) OR HARD-WIRE CONNECTIONS FOR FAUCET/VALVE TRANSFORMERS. COORDINATE EXACT REQUIREMENTS AND LOCATIONS WITH PLUMBING CONTRACTOR. PROVIDE DISCONNECTS IF HARD-WIRED.

ALL DESIGN PRIOR TO 08/28/2025 WAS PERFORMED BY IMEG UNDER THE RESPONSIBLE CHARGE OF THOMAS C. NIELSEN, PE #53492.
ALL SUBSEQUENT DESIGN BY IMEG IS UNDER THE RESPONSIBLE CHARGE OF BRIAN J. LEAVITT, PE #87733.

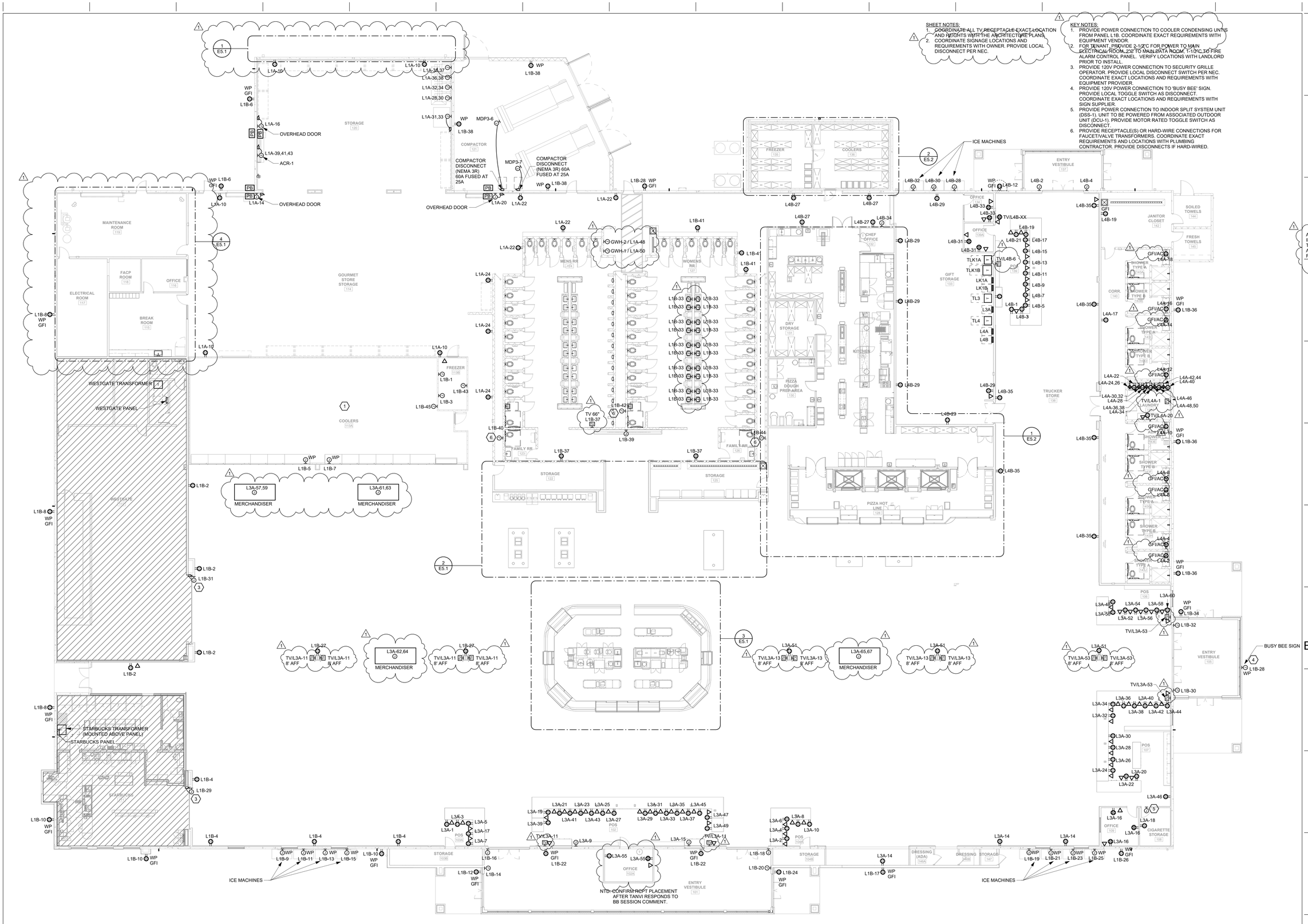

1 E1.3 ELECTRICAL POWER PLAN
SCALE: 3/32" = 1'-0"

kasper architects + assoc.
10175 Fortune Parkway, Suite 701
Jacksonville, FL 32256
p 904.683.9201 f 904.683.9702
www.kasperarch.com
FL License No.: AA26000802

IMEG
formerly McVeigh & Mangum Engineering
www.IMEGCorp.com
9133 R.G. Skinner Parkway
Jacksonville, Florida 32256
Ph: (904) 483-5200 Fax: (904) 636-6700
email: mail@McVeighMangum.com
CA 6330
Eng. of Record: Thomas C. Nielsen
License No.: 53492

BRIAN JOSEPH LEAVITT LICENSE No. 87733 STATE OF FLORIDA PROFESSIONAL ENGINEER
Digitally signed by Brian Leavitt
Reason: This item has been electronically signed and sealed by Brian J. Leavitt using a Digital Signature and Seal. Printed copies of this document are not considered signed and sealed and the signature must be verified on any electronic copies.
Date: 2025.08.28 14:54:48-05'00'

BUSY BEE ELLISVILLE

136 SW WEBBS GLN
LAKE CITY, FL 32024

PROJECT NO.:	22024
DATE:	06/02/2025
PRIOR ISSUES:	
1	08/24/2025 ASI #1

ELECTRICAL POWER PLAN

E1.3

DRAWN BY:	IMEG
CHECKED BY:	IMEG

100% CONSTRUCTION DOCUMENTS

© 2013

ALL REPORTS, SPECIFICATIONS, COMPUTER FILES, FIELD DATA, AND OTHER DOCUMENTATION PREPARED BY KASPER ARCHITECTURE & DEVELOPMENT, INC. (KAD) AS INSTRUMENTS OF SERVICE SHALL REMAIN THE PROPERTY OF KAD. KAD SHALL RETAIN ALL COMMON LAW, STATUTORY AND OTHER RESERVED RIGHTS, INCLUDING THE COPYRIGHT THERETO. THIS DRAWING SHALL NEVER BE REPRODUCED IN WHOLE OR IN PART WITHOUT THE EXPRESS WRITTEN PERMISSION OF KAD

LIGHTING SEQUENCE OF OPERATIONS:

A. PUBLIC AREAS AND VESTIBULES ARE 24 HOUR ON WITH DIMMING.
B. KITCHEN AREAS ARE CONTROLLED BY TIME CLOCK WITH STORE HOURS (VERIFY HOURS & PROGRAMMING WITH OWNER).
C. EMPLOYEE AREAS (STORAGE, MAINTENANCE, BREAKROOMS, OFFICES, ETC...) ARE CONTROLLED BY MANUAL AND OCCUPANCY CONTROLLED.
D. SHOWER AREAS ARE CONTROLLED WITH MANUAL CONTROLS.

KEY NOTES:

1. 200A FEED-THRU METER FOR WESTGATE RETAIL.
2. FOR TENANT. PROVIDE 2-1/2"C FOR POWER TO MAIN ELECTRICAL ROOM, 2"C TO MAIN DATA ROOM, 1-1/2"C TO FIRE ALARM CONTROL PANEL. VERIFY LOCATIONS WITH LANDLORD PRIOR TO INSTALL.
3. ALL EXIT SIGNS WILL BE ON PANEL LP1 CIRCUIT 16.

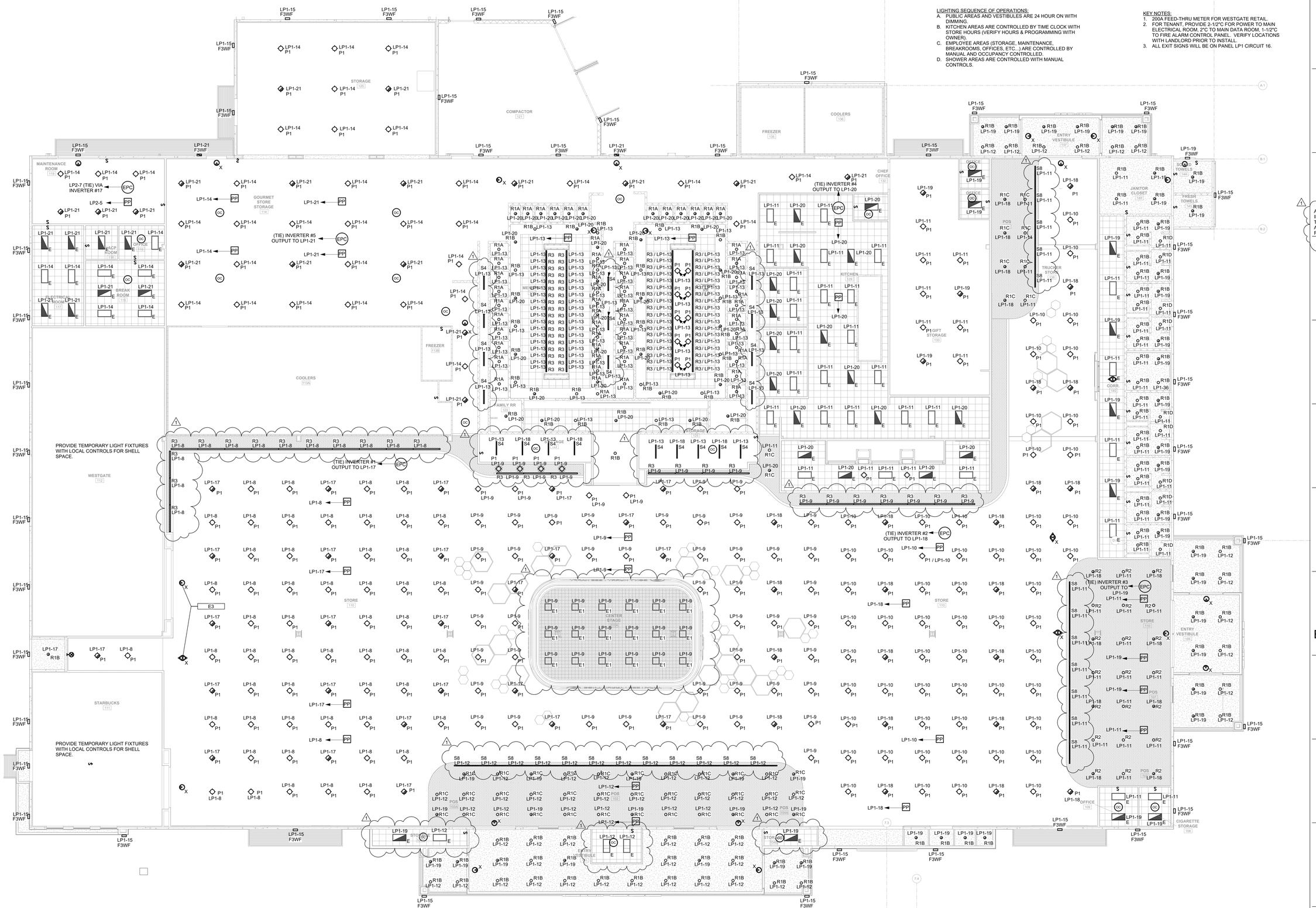

2 ELECTRICAL LIGHTING PLAN
E1.4
SCALE: 3/32" = 1'-0"

kasper architects + assoc.
10175 Fortune Parkway, Suite 701
Jacksonville, FL 32256
p 904.683.9201 f 904.683.9702
www.kasperarch.com
FL License No.: AA26000802

IMEG
formerly McVeigh & Mangum Engineering
www.IMEGCorp.com
9133 R.G. Skinner Parkway
Jacksonville, Florida 32256
Ph: (904) 483-5200 Fax: (904) 636-6700
email: mail@McVeighMangum.com
CA 6330
Eng. of Record: Thomas C. Nielsen
License No.: 53492

ALL DESIGN PRIOR TO 08/28/2025 WAS PERFORMED BY IMEG UNDER THE RESPONSIBLE CHARGE OF THOMAS C. NIELSEN, PE #53492. ALL SUBSEQUENT DESIGN BY IMEG IS UNDER THE RESPONSIBLE CHARGE OF BRIAN J. LEAVITT, PE #87733.

BRIAN JOSEPH LEAVITT
LICENSE
No. 87733
STATE OF FLORIDA
PROFESSIONAL ENGINEER

Brian Leavitt

Digitally signed by Brian Leavitt
Reason: This item has been electronically signed and sealed by Brian J. Leavitt PE using a Digital Signature and Seal. Printed copies of this document are not considered signed and sealed and the signature must be verified on any electronic copies.
Date: 2025.08.28 14:55:06-05'00'

BUSY BEE ELLISVILLE

136 SW WEBBS GLN
LAKE CITY, FL 32024

PROJECT NO.:	22024
DATE:	06/02/2025
PRIOR ISSUES:	
1	08/24/2025 ASI #1

ELECTRICAL LIGHTING PLAN

E1.4

DRAWN BY:	IMEG
CHECKED BY:	IMEG

100% CONSTRUCTION DOCUMENTS

© 2013

ALL REPORTS, SPECIFICATIONS, COMPUTER FILES, FIELD DATA, AND OTHER DOCUMENTATION PREPARED BY KASPER ARCHITECTURE & DEVELOPMENT, INC. (KAD) AS INSTRUMENTS OF SERVICE SHALL REMAIN THE PROPERTY OF KAD. KAD SHALL RETAIN ALL COMMON LAW, STATUTORY AND OTHER RESERVED RIGHTS, INCLUDING THE COPYRIGHT THERETO. THIS DRAWING SHALL NEVER BE REPRODUCED IN WHOLE OR IN PART WITHOUT THE EXPRESS WRITTEN PERMISSION OF KAD.

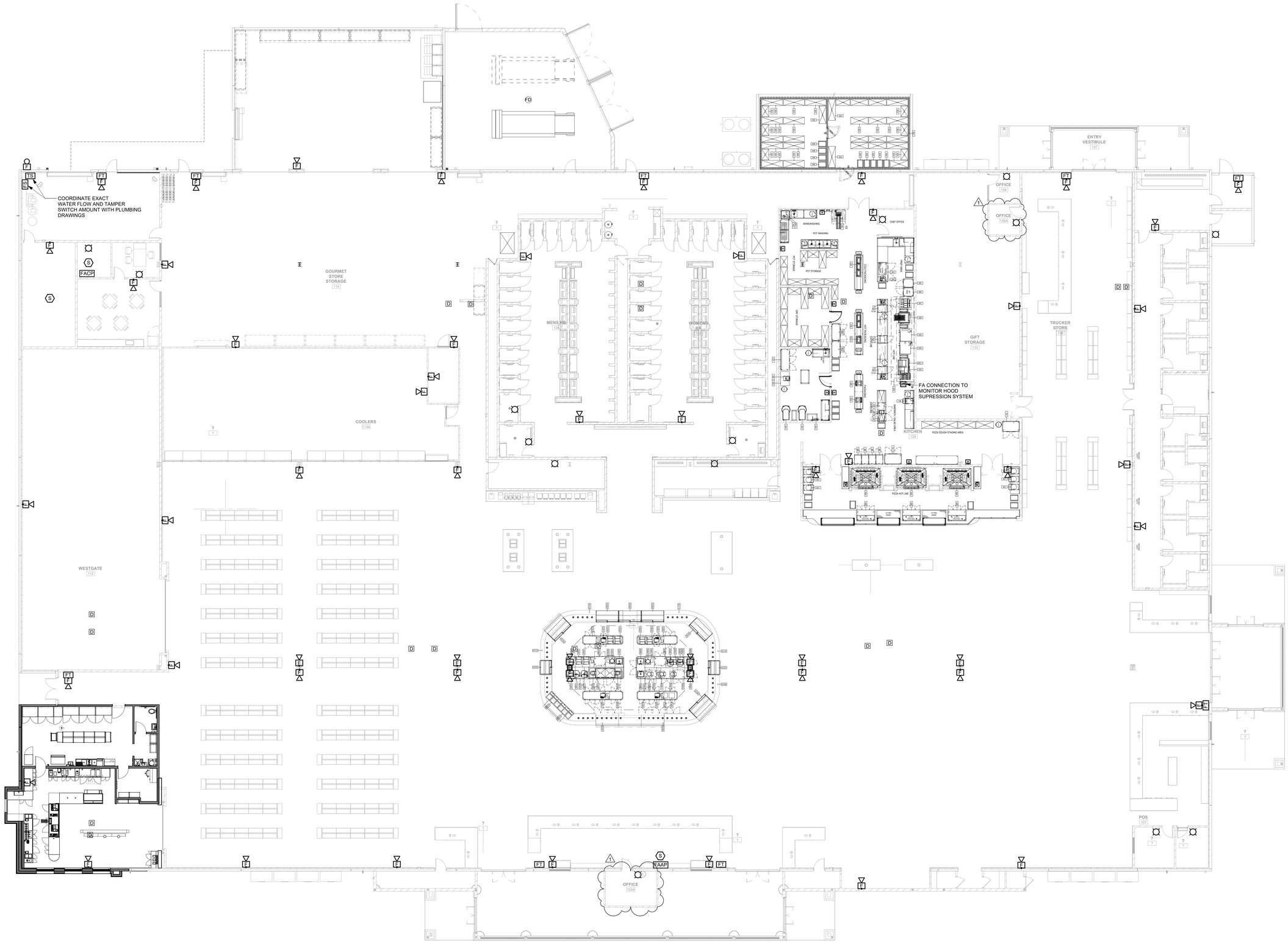

1 E1.5 FIRE ALARM PLAN
SCALE: 3/32" = 1'-0"

ALL REPORTS, SPECIFICATIONS, COMPUTER FILES, FIELD DATA AND OTHER DOCUMENTATION PREPARED BY KASPER ARCHITECTURE & DEVELOPMENT, INC. (KAD) AS INSTRUMENTS OF SERVICE SHALL REMAIN THE PROPERTY OF KAD. KAD SHALL RETAIN ALL COMMON LAW, STATUTORY AND OTHER RESERVED RIGHTS, INCLUDING THE COPYRIGHT THERETO. THIS DRAWING SHALL NEVER BE REPRODUCED IN WHOLE OR IN PART WITHOUT THE EXPRESS WRITTEN PERMISSION OF KAD.

kasper architects + assoc.
10175 Fortune Parkway, Suite 701
Jacksonville, FL 32256
p 904.683.9201 f 904.683.9702
www.kasperarch.com
FL License No.: AA26000802

IMEG
formerly McVeigh & Mangum Engineering
www.IMEGCorp.com
9133 R.G. Skinner Parkway
Jacksonville, Florida 32256
Ph: (904) 483-5200 Fax: (904) 636-6700
email: mail@McVeighMangum.com
CA 6330
Eng. of Record:
License No.:

1 ALL DESIGN PRIOR TO 08/28/2025 WAS PERFORMED BY IMEG UNDER THE RESPONSIBLE CHARGE OF THOMAS C. NIELSEN, PE #53492. ALL SUBSEQUENT DESIGN BY IMEG IS UNDER THE RESPONSIBLE CHARGE OF BRIAN J. LEAVITT, PE #87733.

BRIAN JOSEPH LEAVITT
LICENSE
No. 87733
STATE OF FLORIDA
PROFESSIONAL ENGINEER

Brian Leavitt

Digitally signed by Brian Leavitt
Reason: This item has been electronically signed and sealed by Brian J. Leavitt, PE using a Digital Signature and Seal. Printed copies of this document are not considered signed and sealed and the signature must be verified on any electronic copies.
Date: 2025.08.28 14:55:24-05'00'

BUSY BEE ELLISVILLE

136 SW WEBBS GLN
LAKE CITY, FL 32024

PROJECT NO.:	22024
DATE:	06/02/2025
PRIOR ISSUES:	
1	08/24/2025 ASI #1

FIRE ALARM PLAN

E1.5

DRAWN BY:	IMEG
CHECKED BY:	IMEG

100% CONSTRUCTION DOCUMENTS

© 2013

KEY NOTES:

1. PROVIDE POWER CONNECTION FOR EQUIPMENT - COORDINATE EXACT CONNECTION POINT WITH MECHANICAL CONTRACTOR. REFER TO PANEL SCHEDULE AND EQUIPMENT STARTERS AND DISCONNECTS SCHEDULE FOR ELECTRICAL REQUIREMENTS. DISCONNECT TO BE FACTORY MOUNTED BY MANUFACTURER.
2. PROVIDE POWER CONNECTION FOR EQUIPMENT - COORDINATE EXACT CONNECTION POINT WITH MECHANICAL CONTRACTOR. REFER TO PANEL SCHEDULE AND EQUIPMENT STARTERS AND DISCONNECTS SCHEDULE FOR ELECTRICAL REQUIREMENTS. PROVIDE NEMA 3R NON-FUSED DISCONNECT.
3. PROVIDE POWER CONNECTION FOR SPLIT SYSTEM EQUIPMENT - COORDINATE EXACT CONNECTION POINT WITH MECHANICAL CONTRACTOR. OUTDOOR UNIT DCU-1 TO POWER INDOOR UNIT DSS-1 REFER TO PANEL SCHEDULE AND EQUIPMENT STARTERS AND DISCONNECTS SCHEDULE FOR ELECTRICAL REQUIREMENTS. PROVIDE NEMA 3R DISCONNECT FOR OUTDOOR UNIT. PROVIDE MOTOR RATED TOGGLE SWITCH FOR INDOOR UNITY
4. PROVIDE NEMA 3R RATED JELLY JAR LED FIXTURE. 500 LUMENS. TIE INTO CIRCUIT BEING UTILIZED FOR RECEPTACLE.

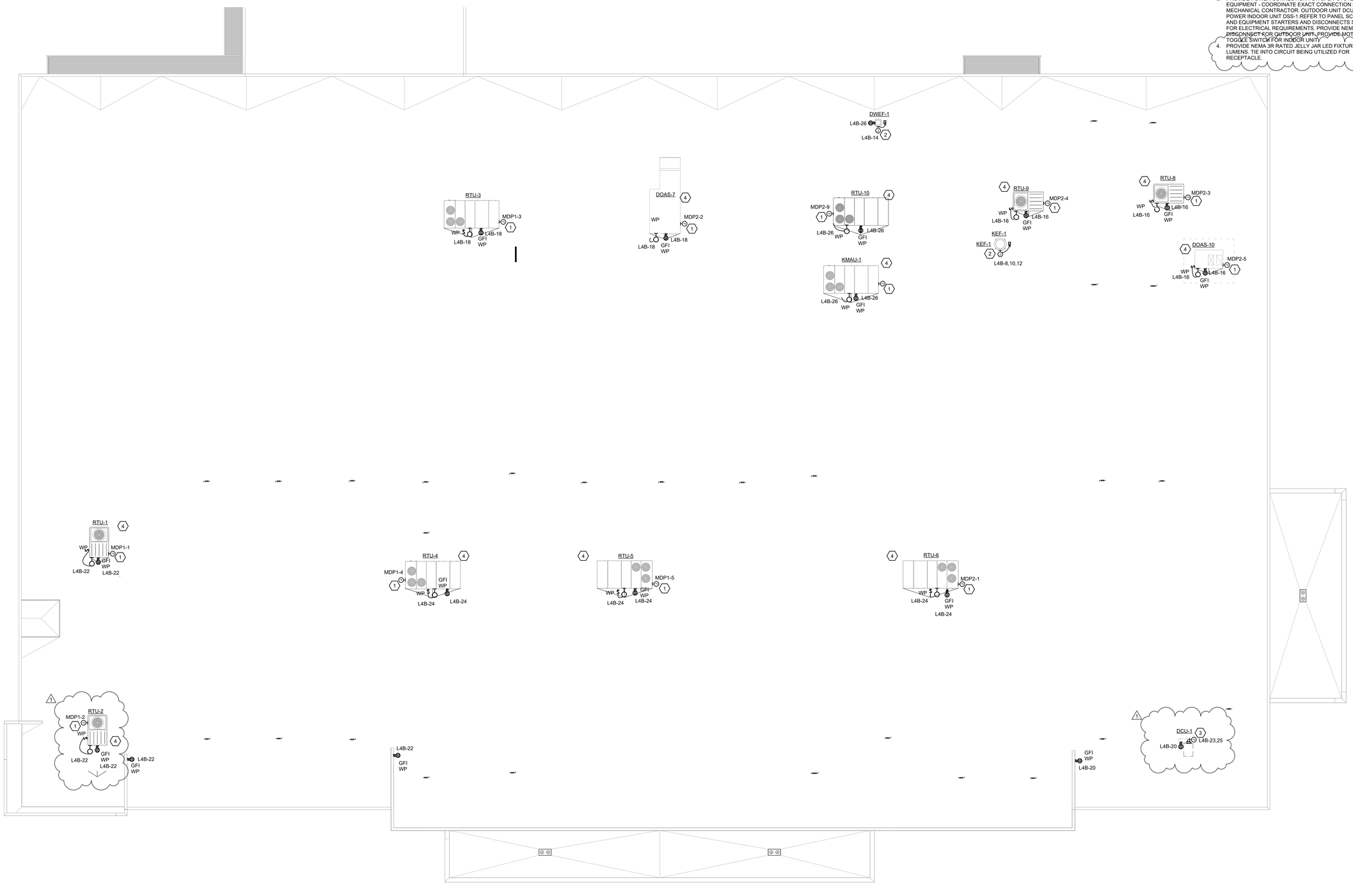

1 ALL DESIGN PRIOR TO 08/28/2025 WAS PERFORMED BY IMEG UNDER THE RESPONSIBLE CHARGE OF THOMAS C. NIELSEN, PE #53492. ALL SUBSEQUENT DESIGN BY IMEG IS UNDER THE RESPONSIBLE CHARGE OF BRIAN J. LEAVITT, PE #87733.

1 E4.1 ELECTRICAL ROOF PLAN

SCALE: 3/32" = 1'-0"

kasper architects + assoc.
10175 Fortune Parkway, Suite 701
Jacksonville, FL 32256
p 904.683.9201 f 904.683.9702
www.kasperarch.com
FL License No.: AA26000802

IMEG
formerly McVeigh & Mangum Engineering
www.IMEGCorp.com
9133 R.G. Skinner Parkway
Jacksonville, Florida 32256
Ph: (904) 483-5200 Fax: (904) 636-6700
email: mail@McVeighMangum.com
CA 6330
Eng. of Record: THOMAS J. FUGARD
License No.: 82121

BRIAN JOSEPH LEAVITT
LICENSE
No. 87733
STATE OF FLORIDA
PROFESSIONAL ENGINEER

Brian Leavitt

Digitally signed by Brian Leavitt
Reason: This item has been electronically signed and sealed by Brian J. Leavitt PE using a Digital Signature and Seal. Printed copies of this document are not considered signed and sealed and the signature must be verified on any electronic copies.
Date: 2025.08.28 14:55:43-05'00'

BUSY BEE ELLISVILLE

136 SW WEBBS GLN
LAKE CITY, FL 32024

PROJECT NO.:	22024
DATE:	06/02/2025

PRIOR ISSUES:

1	08/24/2025	ASI #1

ELECTRICAL ROOF PLAN

E4.1

DRAWN BY:	IMEG
CHECKED BY:	IMEG

100% CONSTRUCTION DOCUMENTS

© 2013

ALL REPORTS, SPECIFICATIONS, COMPUTER FILES, FIELD DATA, AND OTHER DOCUMENTATION PREPARED BY KASPER ARCHITECTURE & DEVELOPMENT, INC. (KAD) AS INSTRUMENTS OF SERVICE SHALL REMAIN THE PROPERTY OF KAD. KAD SHALL RETAIN ALL COMMON LAW, STATUTORY AND OTHER RESERVED RIGHTS, INCLUDING THE COPYRIGHT THERETO. THIS DRAWING SHALL NEVER BE REPRODUCED IN WHOLE OR IN PART WITHOUT THE EXPRESS WRITTEN PERMISSION OF KAD.

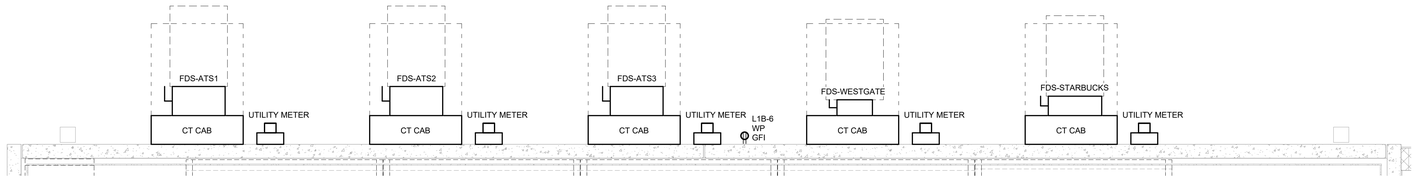

1 ENLARGED ELECTRICAL SERVICE DISCONNECTS
E5.1
SCALE: 3/8" = 1'-0"

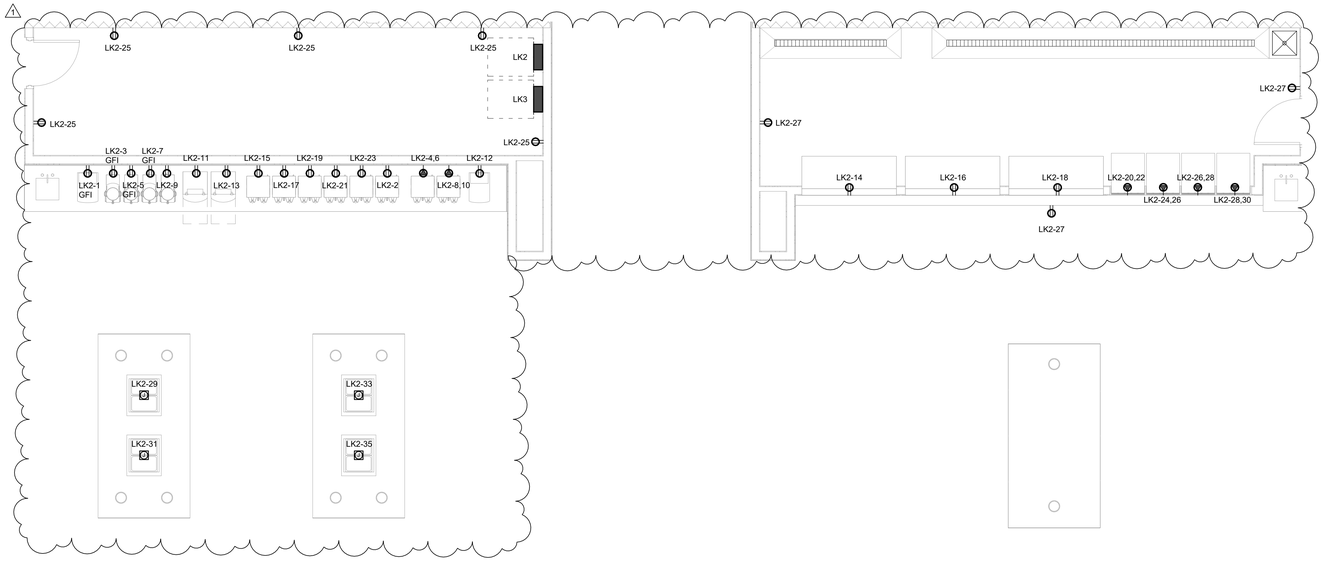

2 ENLARGED KITCHEN EQUIPMENT PLAN SOUTH - POWER
E5.1
SCALE: 1/4" = 1'-0"

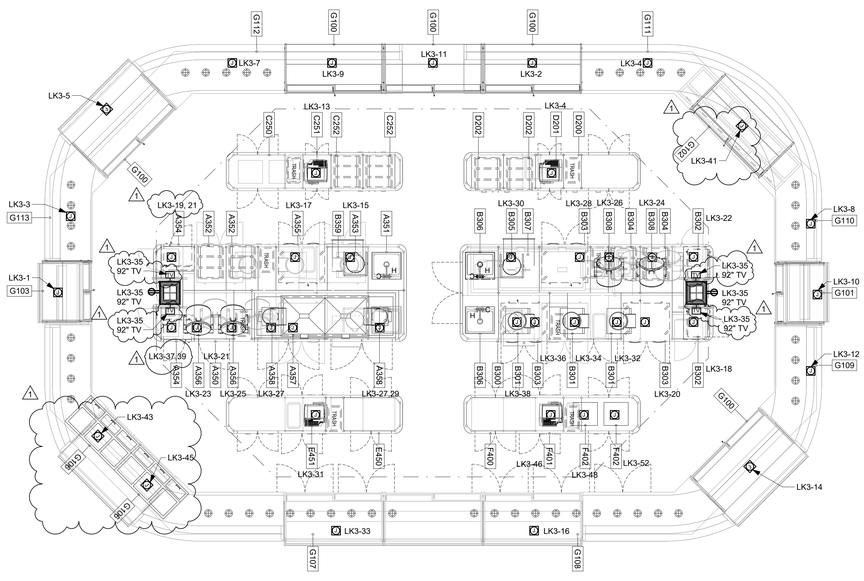

3 ENLARGED CENTER STAGE EQUIPMENT PLAN - POWER
E5.1
SCALE: 1/4" = 1'-0"

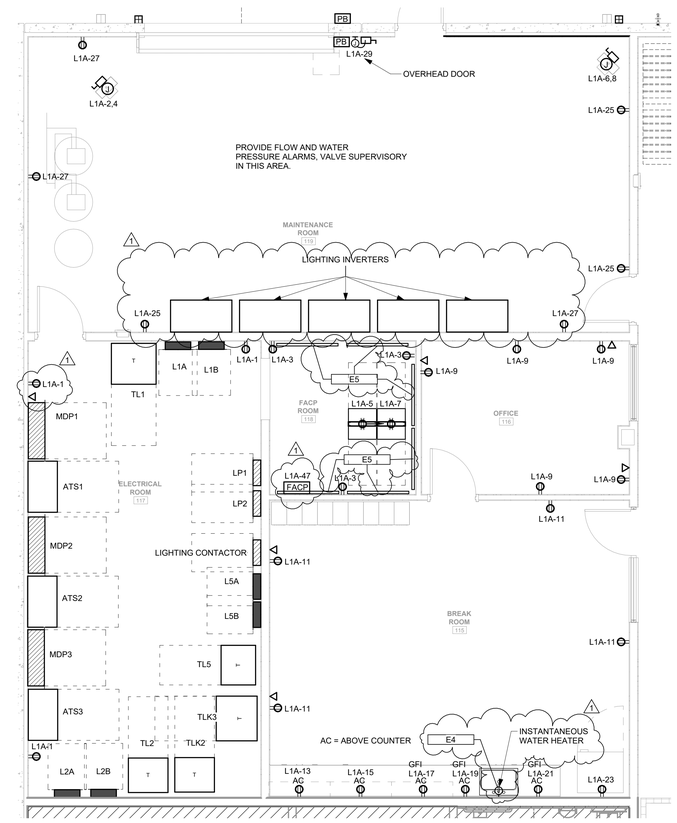

4 ENLARGED ELECTRICAL / MAINTENANCE ROOM
E5.1
SCALE: 1/4" = 1'-0"

KEYNOTES:

4. PROVIDE POWER TO SECURITY PANELS. UTILIZE PANEL "L1A". COORDINATE POWER SUPPLY WITH EQUIPMENT SUPPLIERS. UPDATE PANEL SCHEDULE WITH FINAL CIRCUIT INFORMATION.

5. PROVIDE POWER TO INSTANTANEOUS WATER HEATER. UTILIZE PANEL "L1A". COORDINATE POWER SUPPLY WITH EQUIPMENT SUPPLIERS. UPDATE PANEL SCHEDULE WITH FINAL CIRCUIT INFORMATION.

GENERAL NOTES:

A. CONFIRM POWER REQUIREMENTS FOR CENTER STAGE EQUIPMENT WITH EQUIPMENT SUPPLIER.

kasper architects + assoc.
10175 Fortune Parkway, Suite 701
Jacksonville, FL 32256
p 904.683.9201 f 904.683.9702
www.kasperarch.com
FL License No.: AA26000802

IMEG
formerly McVeigh & Mangum Engineering
www.IMEGCorp.com
9133 R.G. Skinner Parkway
Jacksonville, Florida 32256
Ph: (904) 483-5200 Fax: (904) 636-6700
email: mail@McVeighMangum.com
CA 6330
Eng. of Record: Thomas C. Nielsen
License No.: 53492

ALL DESIGN PRIOR TO 08/28/2025 WAS PERFORMED BY IMEG UNDER THE RESPONSIBLE CHARGE OF THOMAS C. NIELSEN, PE #53492.
ALL SUBSEQUENT DESIGN BY IMEG IS UNDER THE RESPONSIBLE CHARGE OF BRIAN J. LEAVITT, PE #87733.

BRIAN JOSEPH LEAVITT
LICENSE
No. 87733
STATE OF FLORIDA
PROFESSIONAL ENGINEER

Brian Leavitt

Digitally signed by Brian Leavitt
Reason: This item has been electronically signed and sealed by Brian J. Leavitt using a Digital Signature. Printed copies of this document are not considered signed and sealed and the signature must be verified on any electronic copies.
Date: 2025.08.28 14:56:04-05'00'

BUSY BEE ELLISVILLE

136 SW WEBBS GLN
LAKE CITY, FL 32024

PROJECT NO.:	22024
DATE:	06/02/2025
PRIOR ISSUES:	
1	08/24/2025 ASI #1

ENLARGED PLANS

E5.1

DRAWN BY:	IMEG
CHECKED BY:	IMEG

100% CONSTRUCTION DOCUMENTS

© 2013

ALL REPORTS, SPECIFICATIONS, COMPUTER FILES, FIELD DATA, AND OTHER DOCUMENTATION PREPARED BY KASPER ARCHITECTURE & DEVELOPMENT, INC. (KAD) AS INSTRUMENTS OF SERVICE SHALL REMAIN THE PROPERTY OF KAD. KAD SHALL RETAIN ALL COMMON LAW, STATUTORY AND OTHER RESERVED RIGHTS, INCLUDING THE COPYRIGHT THERETO. THIS DRAWING SHALL NEVER BE REPRODUCED IN WHOLE OR IN PART WITHOUT THE EXPRESS WRITTEN PERMISSION OF KAD.

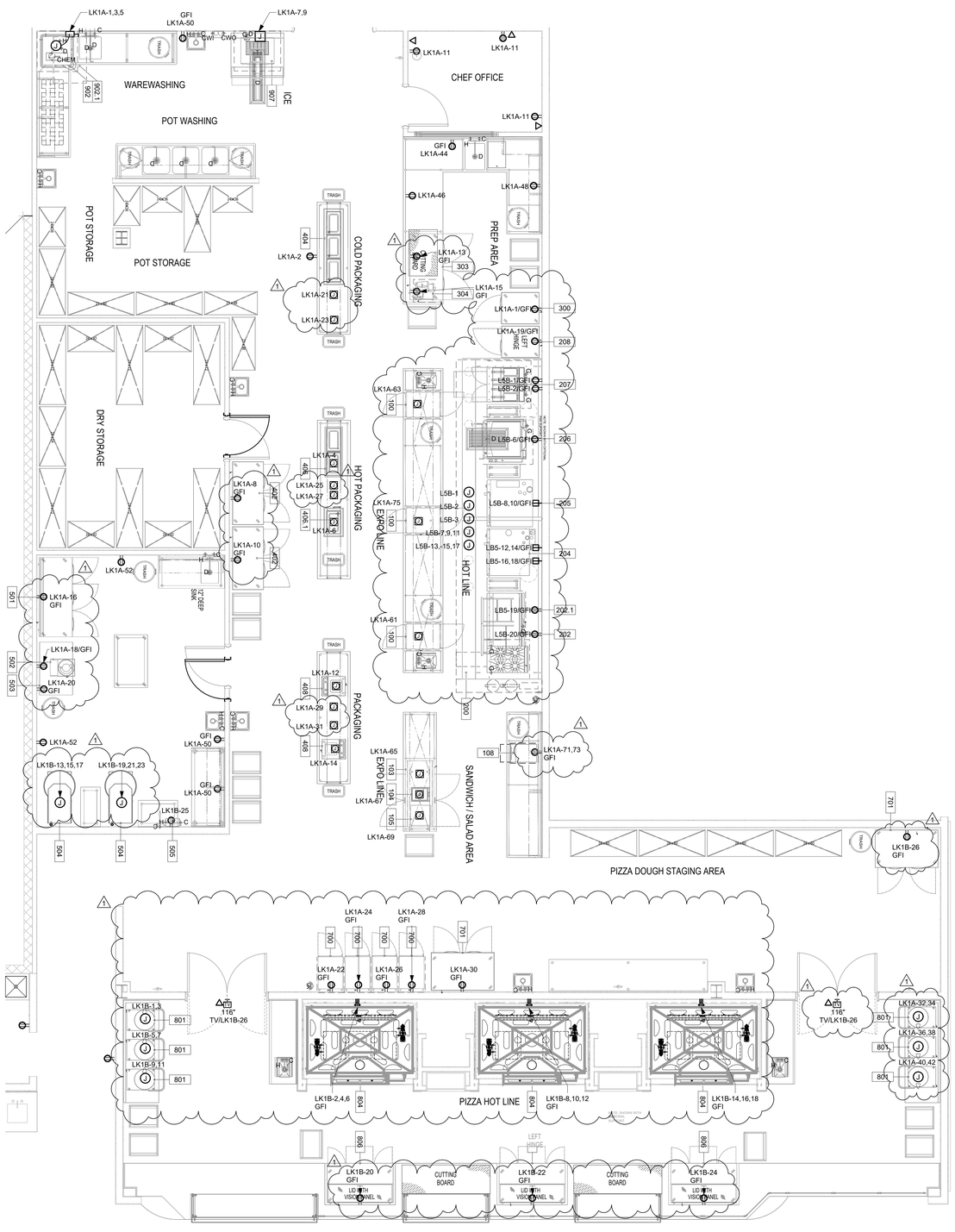

1 E5.2 ENLARGED KITCHEN EQUIPMENT PLAN NORTH - POWER
SCALE: 1/4" = 1'-0"

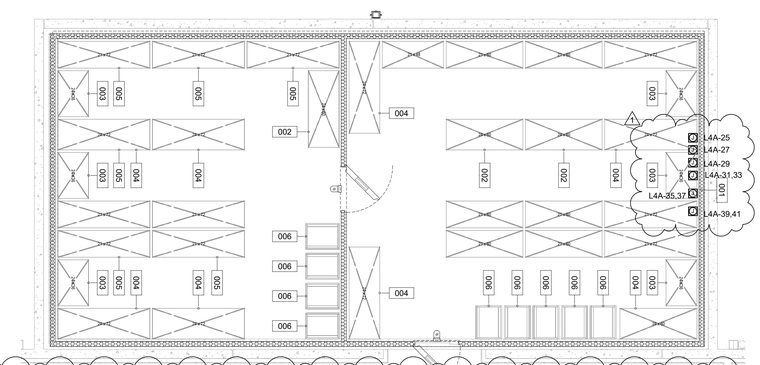

2 E5.2 ENLARGED OUTDOOR COOLER/FREEZER PLAN NORTH - POWER
SCALE: 1/4" = 1'-0"

GENERAL NOTES:

1. CONFIRM POWER REQUIREMENTS FOR KITCHEN EQUIPMENT, FREEZER, AND COOLER WITH EQUIPMENT SUPPLIER.

kasper architects + assoc.
10175 Fortune Parkway, Suite 701
Jacksonville, FL 32256
p 904.683.9201 f 904.683.9702
www.kasperarch.com
FL License No.: AA26000802

IMEG
formerly McVeigh & Mangum Engineering
www.IMEGCorp.com
9133 R.G. Skinner Parkway
Jacksonville, Florida 32256
Ph: (904) 483-5200 Fax: (904) 636-6700
email: mail@McVeighMangum.com
CA 6330
Eng. of Record: Thomas C. Nielsen
License No.: 53492

ALL DESIGN PRIOR TO 08/28/2025 WAS PERFORMED BY IMEG UNDER THE RESPONSIBLE CHARGE OF THOMAS C. NIELSEN, PE #53492.
ALL SUBSEQUENT DESIGN BY IMEG IS UNDER THE RESPONSIBLE CHARGE OF BRIAN J. LEAVITT, PE #87733.

BRIAN JOSEPH LEAVITT
LICENSE
No. 87733
STATE OF FLORIDA
PROFESSIONAL ENGINEER

Brian Leavitt

Digitally signed by Brian Leavitt
Reason: This item has been electronically signed and sealed by Brian J. Leavitt, PE using a Digital Signature and Date. Printed copies of this document are not considered signed and sealed and the signature must be verified on any electronic copies
Date: 2025.08.28 14:56:23-05'00'

BUSY BEE ELLISVILLE

136 SW WEBBS GLN
LAKE CITY, FL 32024

PROJECT NO.:	22024
DATE:	06/02/2025
PRIOR ISSUES:	
1	08/24/2025 ASI #1

ENLARGED PLANS

E5.2

DRAWN BY:	IMEG
CHECKED BY:	IMEG

100% CONSTRUCTION DOCUMENTS

© 2013

ALL REPORTS, SPECIFICATIONS, COMPUTER FILES, FIELD DATA AND OTHER DOCUMENTATION PREPARED BY KASPER ARCHITECTURE & DEVELOPMENT, INC. (KAD) AS INSTRUMENTS OF SERVICE SHALL REMAIN THE PROPERTY OF KAD. KAD SHALL RETAIN ALL COMMON LAW, STATUTORY AND OTHER RESERVED RIGHTS, INCLUDING THE COPYRIGHT THERETO. THIS DRAWING SHALL NEVER BE REPRODUCED IN WHOLE OR IN PART WITHOUT THE EXPRESS WRITTEN PERMISSION OF KAD

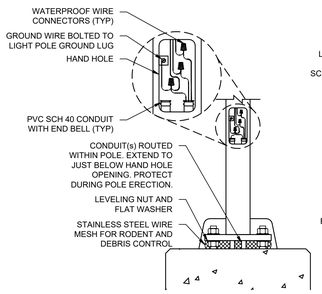

ANCHOR BOLTS:
ANCHOR BOLTS AND HARDWARE SHALL BE HOT DIPPED GALVANIZED STEEL. ANY DAMAGE TO FACTORY COATING OR FIELD CUTS SHALL BE THOROUGHLY CLEANED AND PAINTED IN THE FIELD WITH A COLD GALVANIZING ZINC COATING. AFTER POLE ERECTION, A MARINE GRADE ANTI-SEIZE AND ANTI-CORROSSION LUBRICANT SHALL BE APPLIED TO ANCHOR BOLT THREADS AND HARDWARE FOR CORROSION PROTECTION.

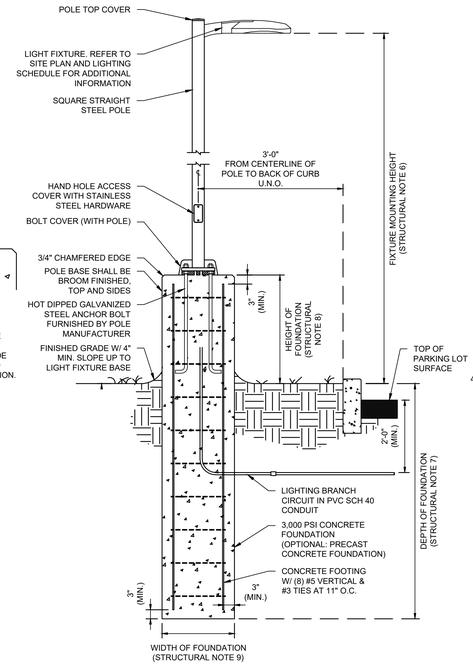

STRUCTURAL NOTES:		
1. THE COMPLETE LIGHT POLE ASSEMBLY INCLUDING POLE, CROSS ARM(S), LIGHT FIXTURES AND FOUNDATION MEET THE MINIMUM REQUIREMENTS OF FBC 2017 6th EDITION (INCLUDING HVHZ SECTION 1620 AND 1819.7 REQUIREMENTS), ASCE7-10 AND ACI318-14.		
2. WIND LOAD:	136 MPH	
3. RISK CATEGORY:	II	
4. EXPOSURE:	C	
5. MINIMUM POLE EPA RATING:	3	SF
6. FIXTURE MOUNTING HEIGHT	20	FT
7. DEPTH OF FOUNDATION	7	FT
8. HEIGHT OF FOUNDATION	3	FT
9. WIDTH OF FOUNDATION (ROUND)	2	FT

NOTE FOR THE CONTRACTOR:
CONTRACTOR HAS AN OPTION TO USE PRE-CAST POLE BASE THAT SATISFIES THE DESIGN CRITERIA AS LISTED IN THIS DETAIL. G.C. TO NOTIFY THE E.O.R. IN CASE OF ANY DISCREPANCY.

1 E6.1 POLE BASE

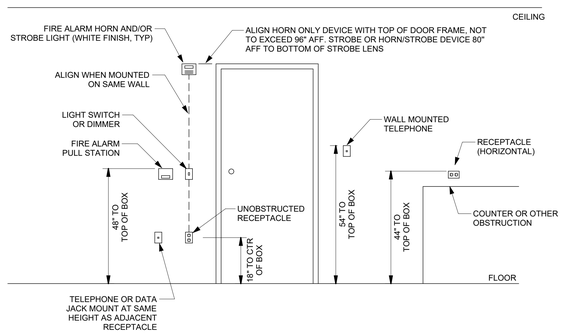

2 E6.1 MOUNTING HEIGHT DIAGRAM

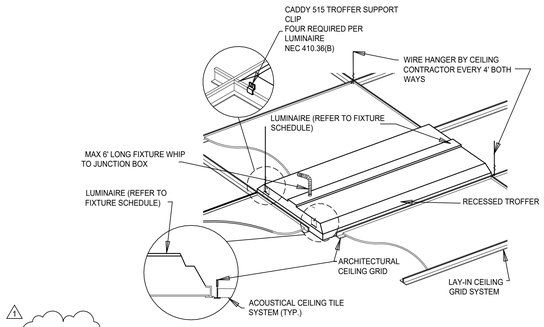

3 E6.1 TROFFER

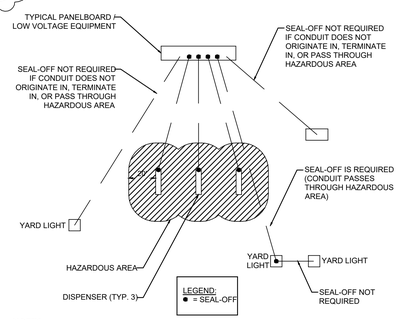

NOTES:
ELECTRICAL WIRING SHALL BE DONE IN ACCORDANCE WITH APPROVED LOCAL ELECTRICAL CODES AND BY A LICENSED ELECTRICIAN. THE PUMP SHALL BE PROPERLY GROUNDED. THE RGS CONDUIT SHALL BE USED WHEN INSTALLING ELECTRICAL WIRING.

4 E6.1 SEAL OFF DETAIL

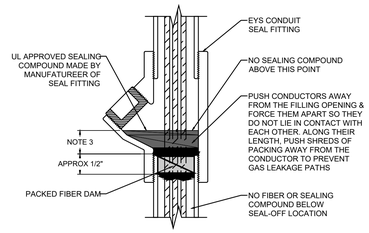

1. PROVIDE EXPLOSION PROOF SEALS-OFFS IN ACCORDANCE WITH ARTICLES 500, 501 AND 514 (CLASS 1, DIVISION 1 & 2) OF THE 2011 NEC. TYPICAL FOR ALL CONDUITS IN CLASS 1 LOCATIONS, INCLUDING LOW VOLTAGE CONDUITS.
2. CONDUIT FILL SHALL NOT EXCEED 25% OF SEAL-OFF AS PER NEC. 501.15(C)(6)
3. THE THICKNESS OF THE SEALING COMPOUND SHALL BE MINIMUM THE TRADE SIZE OF THE SEALING FITTING AND NO LESS THAN 5/8".

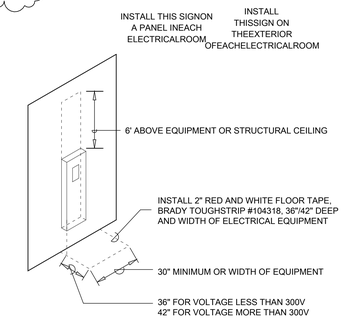

NEC 110.26(E)- THE SPACE EQUAL TO THE WIDTH AND DEPTH OFTHE EQUIPMENT AND EXTENDING TO A HEIGHT OF 6' ABOVE THEEQUIPMENT SHALL BE DEDICATED TO THE ELECTRICAL INSTALLATION.

5 E6.1 WORKING CLEARANCES

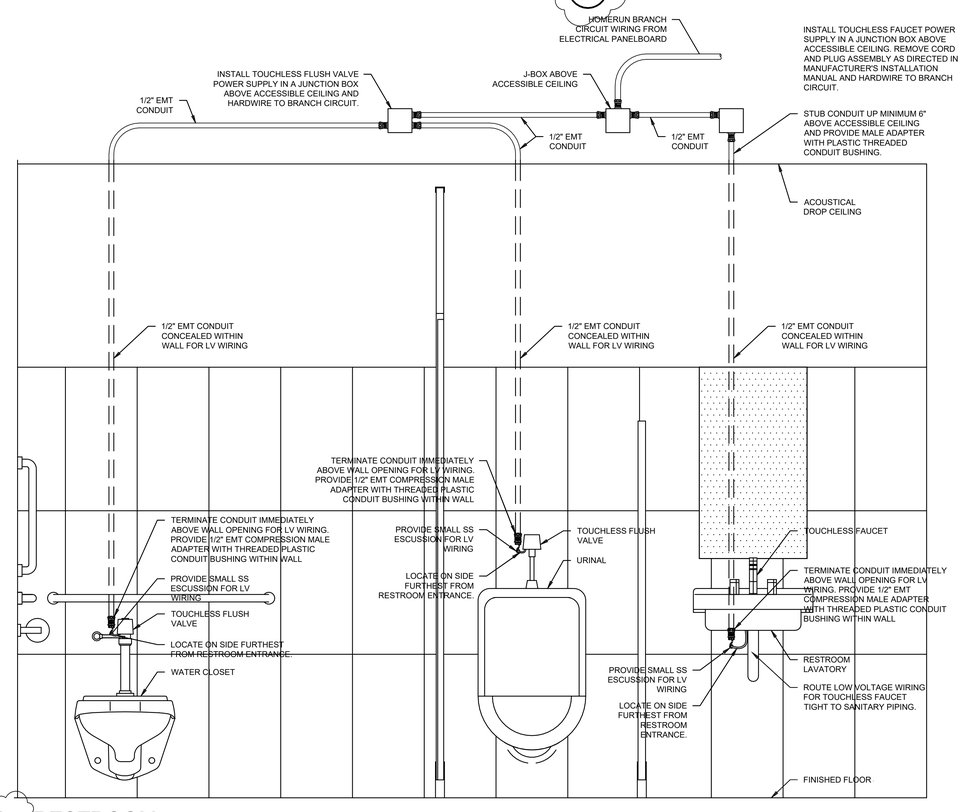

6 E6.1 RESTROOM

NORMAL BRANCH	WHITE
EQUIPMENT BRANCH	GREEN
LIFE SAFETY BRANCH	YELLOW
CRITICAL BRANCH	ORANGE
FIRE ALARM	RED
NURSE CALL	PURPLE
DATA	BLUE
ACCESS CONTROL	GRAY
CAMERAS & IPTV	BLACK

ALL CONDUIT AND MC CABLE SYSTEMSSHALL BE COLOR CODED AS INDICATED.

1 ALL EXTERNAL SIDES OF EACH BOX AND COVER.
2 A THREE INCH WIDE BAND AT LEAST EVERY 10FEET ON CONDUIT OR CABLE.
3 A THREE INCH WIDE BAND ON BOTH SIDES OFALL WALL PENETRATIONS WITHIN 12".

8 E6.1 COLOR CODING

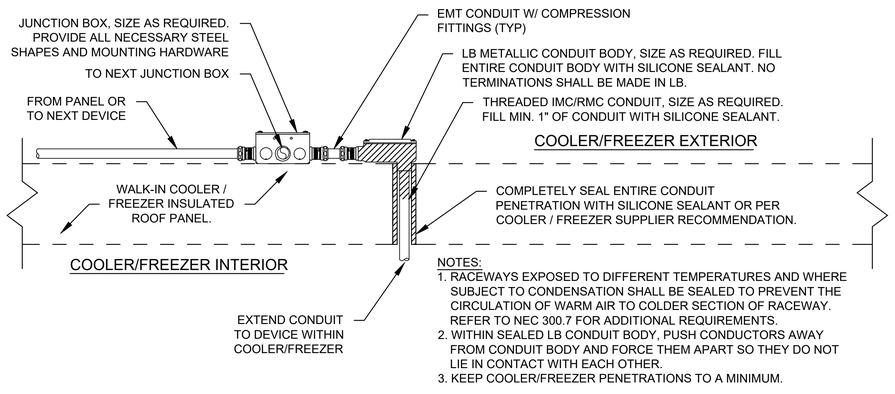

NOTES:
1. RACEWAYS EXPOSED TO DIFFERENT TEMPERATURES AND WHERE SUBJECT TO CONDENSATION SHALL BE SEALED TO PREVENT THE CIRCULATION OF WARM AIR TO COLDER SECTION OF RACEWAY. REFER TO NEC 300.7 FOR ADDITIONAL REQUIREMENTS.
2. WITHIN SEALED LB CONDUIT BODY, PUSH CONDUCTORS AWAY FROM CONDUIT BODY AND FORCE THEM APART SO THEY DO NOT LIE IN CONTACT WITH EACH OTHER.
3. KEEP COOLER/FREEZER PENETRATIONS TO A MINIMUM.

7 E6.1 FREEZER COOLER

kasper architects + assoc.
10175 Fortune Parkway, Suite 701
Jacksonville, FL 32256
p 904.683.9201 f 904.683.9702
www.kasperarch.com
FL License No.: AA26000802

IMEG
formerly McVeigh & Mangum Engineering
www.IMEGCorp.com
9133 R.G. Skinner Parkway
Jacksonville, Florida 32256
Ph: (904) 483-5200 Fax: (904) 636-6700
email: mail@McVeighMangum.com
CA 6330
Eng. of Record: Thomas C. Nielsen
License No.: 53492

ALL DESIGN PRIOR TO 08/28/2025 WAS PERFORMED BY IMEG UNDER THE RESPONSIBLE CHARGE OF THOMAS C. NIELSEN, PE #53492.
ALL SUBSEQUENT DESIGN BY IMEG IS UNDER THE RESPONSIBLE CHARGE OF BRIAN J. LEAVITT, PE #87733.

BRIAN JOSEPH LEAVITT
LICENSE No. 87733
PROFESSIONAL ENGINEER
STATE OF FLORIDA
Brian Leavitt
Digitally signed by Brian Leavitt
Reason: This item has been electronically signed and sealed by Brian J. Leavitt, PE using a Digital Signature. Printed copies of this document are not considered signed and sealed and the signature must be verified on any electronic copies.
Date: 2025.08.28 14:56:41-05'00'

BUSY BEE ELLISVILLE

136 SW WEBBS GLN
LAKE CITY, FL 32024

PROJECT NO.:	22024
DATE:	06/02/2025
PRIOR ISSUES:	
1	08/24/2025 ASI #1

ELECTRICAL DETAILS

E6.1

DRAWN BY:	IMEG
CHECKED BY:	IMEG

100% CONSTRUCTION DOCUMENTS

© 2013

ALL REPORTS, SPECIFICATIONS, COMPUTER FILES, FIELD DATA AND OTHER DOCUMENTATION PREPARED BY KASPER ARCHITECTURE & DEVELOPMENT, INC. (KAD) AS INSTRUMENTS OF SERVICE SHALL REMAIN THE PROPERTY OF KAD. KAD SHALL RETAIN ALL COMMON LAW, STATUTORY AND OTHER RESERVED RIGHTS, INCLUDING THE COPYRIGHT THERETO. THIS DRAWING SHALL NEVER BE REPRODUCED IN WHOLE OR IN PART WITHOUT THE EXPRESS WRITTEN PERMISSION OF KAD

\\Files\Active\Projects\2023\23000902.00\Design\Electrical\20250606 Task Force Reference\Panel Schedules\Electrical Panels.xls

PANEL: MDP1

CONN. LOAD: 404.3 KW DEMAND LOAD: 404.3 KVA I-LINE/QED TYPE
486.3 AMPS 486.3 AMPS SQUARE D
MAIN: 800A MCB VOLTAGE: 480|277 , 3PH, 4W. AIC: 65,000
MTG: SURFACE LOCATION: ACTUAL AIC: X

LOAD TYPE		BREAKER (AMP)		OPT	PHASE CON. LOAD A	B	C	CIRCUIT NUMBER	
M	RTU-1	50/3			10	10	10	1	(3)-#6, (1)-#10 GND IN 1" C
M	RTU-2	50/3			10	10	10	2	(3)-#6, (1)-#10 GND IN 1" C
M	RTU-3	80/3			18	18	18	3	(3)-#3, (1)-#8 GND IN 1-1/4" C
M	RTU-4	125/3			25	25	25	4	(3)-#1, (1)-#6 GND IN 1-1/2" C
M	RTU-5	125/3			25	25	25	5	(3)-#1, (1)-#6 GND IN 1-1/2" C
M	TL1	250/3			34.5	34.9	26.2	6	(3)-#250, (1)-#4 GND IN 2-1/2" C
M	TFP	250/3			0	0	0	7	(3)-#250, (1)-#4 GND IN 2-1/2" C
M	TLK2	175/3			16.7	15.5	12.5	8	(3)-#2/0, (1)-#6 GND IN 2" C
	SPACE	100/3						9	
	SPACE	100/3						10	
	SPACE	225/3						11	
	SPACE	60/3						12	
	SPACE	60/3						13	
	SPACE	60/3						14	

\\Files\Active\Projects\2023\23000902.00\Design\Electrical\20250606 Task Force Reference\Panel Schedules\Electrical Panels.xls

PANEL: MDP2

CONN. LOAD: 405.8 KW DEMAND LOAD: 327.9 KVA I-LINE/QED TYPE
488.1 AMPS 394.4 AMPS SQUARE D
MAIN: 800A MCB VOLTAGE: 480|277 , 3PH, 4W. AIC: 65,000
MTG: SURFACE LOCATION: ACTUAL AIC: X

LOAD TYPE		BREAKER (AMP)		OPT	PHASE CON. LOAD A	B	C	CIRCUIT NUMBER	
M	RTU-6	125/3			25	25	25	1	(3)-#6, (1)-#10 GND IN 1" C
M	DOAS-7	80/3			18	18	18	2	(3)-#3, (1)-#8 GND IN 1-1/4" C
M	RTU-8	40/3			9	9	9	3	(3)-#10, (1)-#10 GND IN 3/4" C
M	RTU-9	15/3			3	3	3	4	(3)-#10, (1)-#10 GND IN 3/4" C
M	DOAS-10	30/3			7	7	7	5	(3)-#10, (1)-#10 GND IN 3/4" C
R	TL4	175/3			19.7	14	20.1	6	(3)-#2/0, (1)-#6 GND IN 2" C
R	TLKE1	175/3			12.3	9.8	10.5	7	(3)-#2/0, (1)-#6 GND IN 2" C
R	TLK3	250/3			33.04	15.22	31.13	8	(3)-#250, (1)-#4 GND IN 2-1/2" C
M	RTU-10	80/3			18	18	18	9	(3)-#3, (1)-#8 GND IN 1-1/4" C
	SPACE	100/3						10	
	SPACE	225/3						11	
	SPACE	60/3						12	
	SPACE	60/3						13	
	SPACE	60/3						14	

\\Files\Active\Projects\2023\23000902.00\Design\Electrical\20250606 Task Force Reference\Panel Schedules\Electrical Panels.xls

PANEL: MDP3

CONN. LOAD: 335.9 KW DEMAND LOAD: 335.9 KVA I-LINE/QED TYPE
404.1 AMPS 404.1 AMPS SQUARE D
MAIN: 800A MCB VOLTAGE: 480|277 , 3PH, 4W. AIC: 65,000
MTG: SURFACE LOCATION: ACTUAL AIC: X

LOAD TYPE		BREAKER (AMP)		OPT	PHASE CON. LOAD A	B	C	CIRCUIT NUMBER	
M	TLK1A	175/3			21.2	19.5	19.6	1	(3)-#2/0, (1)-#6 GND IN 2" C
M	TLK1B	250/3			34.7	34.2	34.2	2	(3)-#250, (1)-#4 GND IN 2-1/2" C
M	TLK4	175/3			20	21.7	16.7	3	(3)-#2/0, (1)-#6 GND IN 2" C
M	TL3A	175/3			14.93	14.3	12.1	4	(3)-#2/0, (1)-#6 GND IN 2" C
L	PANEL LP1	225/3			16.8	19.1	13.5	5	(3)-#4/0, (1)-#4 GND IN 2" C
M	TRASH COMPACTOR 121	35/3			3.9	3.9	3.9	6	(3)-#3, (1)-#8 GND IN 1-1/2"C
M	TRASH COMPACTOR 121	35/3			3.9	3.9	3.9	7	(3)-#3, (1)-#8 GND IN 1-1/2"C
	SPARE	100/3						8	
	SPARE	100/3						9	
	SPACE	100/3						10	
	SPACE	100/3						11	
	SPACE	225/3						12	
	SPACE	60/3						13	
	SPACE	60/3						14	

\\Files\Active\Projects\2023\23000902.00\Design\Electrical\20250606 Task Force Reference\Panel Schedules\Electrical Panels.xls

PANEL: L1A

CONN. LOAD: 59.7 KW DEMAND LOAD: 57.4 KVA NQOD TYPE
165.8 AMPS 159.4 AMPS SQUARE D
MAIN: 400A MCB VOLTAGE: 208|120 , 3PH, 4W. AIC: 22,000
MTG: SURFACE LOCATION: ELECT ROOM 117 ACTUAL AIC: X

LOAD TYPE	REMARKS	KW	BKR.	OPT	CIRCUIT NUMBER AND PHASE			OPT	BKR.	KW	REMARKS	LOAD TYPE
R	RCPT ELEC RM	0.54	20/1		1	A	2		30/2	2.50	UNIT HEATER	H
R	RCPT FA RM	0.54	20/1		3	B	4			2.50		H
R	RCPT FA RM	0.36	20/1		5	C	6		30/2	2.50	UNIT HEATER	H
R	RCPT FA RM	0.36	20/1		7	A	8			2.50		H
R	RCPT RM 116	0.90	20/1		9	B	10		20/1	0.90	RCPT RM 110,114	R
R	RCPT RM 115	0.72	20/1		11	C	12		20/1		SPARE	
R	RCPT RM 115	0.36	20/1		13	A	14		20/1	1.50	OV DOOR RM 114	M
R	RCPT RM 115	0.36	20/1		15	B	16		20/1	1.50	OV DOOR RM 114	M
R	RCPT RM 115	0.36	20/1		17	C	18		20/1	1.50	OV DOOR RM 114	M
R	RCPT RM 115	0.36	20/1		19	A	20		20/1	1.50	OV DOOR RM 114	M
R	RCPT RM 115	0.36	20/1		21	B	22		20/1	0.90	RCPT RM 114	R
R	REFRIG RM 115	0.36	20/1		23	C	24		20/1	0.54	RCPT RM 114	R
R	RCPT RM 119	0.54	20/1		25	A	26		20/1		SPARE	
R	RCPT RM 119	0.72	20/1		27	B	28		20/2	1.50	ICE BAG MACH. STOR.	A
M	OV DOOR RM 119	1.50	20/1		29	C	30			1.50	120	A
M	CARDBOARD BALER	2.90	40/2		31	A	32		20/2	1.50	ICE BAG MACH. STOR.	A
M	STOR. 120	2.90			33	B	34			1.50	120	A
A	ICE BAG MACH. STOR.	1.50	20/2		35	C	36		20/2	1.50	ICE BAG MACH. STOR.	A
A	120	1.50			37	A	38			1.50	120	A
H	ACR-1	0.80	15/3		39	B	40		25/1	2.24	INVERTER #1	L
H		0.80	15/3		41	C	42		25/1	2.22	INVERTER #2	L
H		0.80	15/3		43	A	44		25/1	2.20	INVERTER #3	L
L	INVERTER #4	1.93	25/1		45	B	46		25/1	2.07	INVERTER #5	L
A	FACP	1.00	20/1		47	C	48		20/1	0.60	GWH-2	A
	SPARE		20/1		49	A	50		20/1	0.60	GWH-1	A
	SPARE		20/1		51	B	52		20/1		SPARE	
	SPARE		20/1		53	C	54		20/1		SPARE	
	SPARE		20/1		55	A	56		20/1		SPARE	
	SPARE		20/1		57	B	58		20/1		SPARE	
	SPARE		20/1		59	C	60		20/1		SPARE	
	SPARE		20/1		61	A	62		20/1		SPARE	
	SPARE		20/1		63	B	64		20/1		SPARE	
	SPARE		20/1		65	C	66		20/1		SPARE	

\\Files\Active\Projects\2023\23000902.00\Design\Electrical\20250606 Task Force Reference\Panel Schedules\Electrical Panels.xls

PANEL: L1B

CONN. LOAD: 35.7 KW DEMAND LOAD: 25.4 KVA NQOD TYPE
99.0 AMPS 70.6 AMPS SQUARE D
MAIN: 400A MLO VOLTAGE: 208|120 , 3PH, 4W. AIC: 22,000
MTG: SURFACE LOCATION: ELECT ROOM 117 ACTUAL AIC: X

LOAD TYPE	REMARKS	KW	BKR.	OPT	CIRCUIT NUMBER AND PHASE			OPT	BKR.	KW	REMARKS	LOAD TYPE
R	FREEZER 113B	1.80	15/1		1	A	2		20/1	0.72	RCPT RM 110	R
R	FREEZER 113B	1.80	15/1		3	B	4		20/1	0.72	RCPT RM 110	R
R	GLASS DR HTR	1.80	15/1		5	C	6		20/1	0.54	GFI RCPT OUTSIDE	R
R	GLASS DR HTR	1.80	15/1		7	A	8		20/1	0.72	GFI RCPT OUTSIDE	R
R	ICE MACHINE	1.50	20/1		9	B	10		20/1	0.54	GFI RCPT OUTSIDE	R
R	ICE MACHINE	1.50	20/1		11	C	12		20/1	0.18	GFI RCPT OUTSIDE	R
R	ICE MACHINE	1.50	20/1		13	A	14		20/1	0.36	J-BOX DOOR	R
R	ICE MACHINE	1.50	20/1		15	B	16		20/1	0.36	J-BOX DOOR	R
R	GFI RCPT OUTSIDE	0.18	20/1		17	C	18		20/1	0.36	J-BOX DOOR	R
R	ICE MACHINE	1.50	20/1		19	A	20		20/1	0.36	J-BOX DOOR	R
R	ICE MACHINE	1.50	20/1		21	B	22		20/1	0.36	GFI RCPT OUTSIDE	R
R	ICE MACHINE	1.50	20/1		23	C	24		20/1	0.18	GFI RCPT OUTSIDE	R
R	ICE MACHINE	1.50	20/1		25	A	26		20/1	0.18	GFI RCPT OUTSIDE	R
M	SECURITY GRILLE	1.20	20/1		27	B	28		20/1	1.60	BUSY BEE SIGN	R
M	SECURITY GRILLE	1.20	20/1		29	C	30		20/1	0.36	J-BOX DOOR	R
R	RCPT RM 114	0.54	20/1		31	A	32		20/1	0.36	J-BOX DOOR	R
L	LIGHTED MIRRORS	0.86	20/1		33	B	34		20/1	0.18	GFI RCPT OUTSIDE	R
	SPARE		20/1		35	C	36		20/1	0.54	GFI RCPT OUTSIDE	R
R	RCPT RR	0.54	20/1		37	A	38		20/1	0.54	RCPT RM 121	R
R	WATERWALL	0.18	20/1	GFI	39	B	40		20/1	0.36	RR PLUMB. XFMR	R
R	RCPT RR	0.54	20/1		41	C	42		20/1	0.36	RR PLUMB. XFMR	R
L	FREEZER LIGHTING	0.50	20/1		43	A	44		20/1	0.36	RR PLUMB. XFMR	R
L	COOLER LIGHTING	0.50	20/1		45	B	46		20/1		SPARE	
	SPARE		20/1		47	C	48		20/1		SPARE	
	SPARE		20/1		49	A	50		20/1		SPARE	
	SPARE		20/1		51	B	52		20/1		SPARE	
	SPARE		20/1		53	C	54		20/1		SPARE	
	SPARE		20/1		55	A	56		20/1		SPARE	
	SPARE		20/1		57	B	58		20/1		SPARE	
	SPARE		20/1		59	C	60		20/1		SPARE	
	SPARE		20/1		61	A	62		20/1		SPARE	
	SPARE		20/1		63	B	64		20/1		SPARE	
	SPARE		20/1		65	C	66		20/1		SPARE	

\\Files\Active\Projects\2023\23000902.00\Design\Electrical\20250606 Task Force Reference\Panel Schedules\Electrical Panels.xls

PANEL: L3A

CONN. LOAD: 41.3 KW DEMAND LOAD: 25.6 KVA NQOD TYPE
114.6 AMPS KITCHEN NORTH 71.2 AMPS SQUARE D
MAIN: 250A MCB VOLTAGE: 208|120 , 3PH, 4W. AIC: 10,000
MTG: SURFACE LOCATION: ACTUAL AIC: X

LOAD TYPE	REMARKS	KW	BKR.	OPT	CIRCUIT NUMBER AND PHASE			OPT	BKR.	KW	REMARKS	LOAD TYPE
R	RCPT U/C SAFE	0.20	20/1		1	A	2		20/1	0.20	RCPT U/C SAFE	R
R	RCPT PRINTER	0.40	20/1		3	B	4		20/1	0.40	RCPT PRINTER	R
R	RCPT POS SYSTEM	0.40	20/1		5	C	6		20/1	0.30	MISC FUEL EQUIP	R
R	MISC FUEL EQUIP	0.30	20/1		7	A	8		20/1	0.40	RCPT POS SYSTEM	R
R	RCPT DISPLAY	0.36	20/1		9	B	10		20/1	0.20	RCPT POS SYSTEM	R
R	RCPT TV	1.08	20/1		11	C	12		20/1	0.20	RCPT POS SYSTEM	R
R	RCPT TV	1.08	20/1		13	A	14		20/1	0.54	RCPT RM 110	R
R	RCPT DISPLAY	0.36	20/1		15	B	16		20/1	1.08	RCPT RM 109	R
R	RCPT POS SYSTEM	0.40	20/1		17	C	18		20/1	0.18	RCPT RM 108	R
R	RCPT POS SYSTEM	0.40	20/1		19	A	20		20/1	0.20	RCPT U/C SAFE	R
R	RCPT POS SYSTEM	0.40	20/1		21	B	22		20/1	0.40	RCPT PRINTER	R
R	RCPT POS SYSTEM	0.40	20/1		23	C	24		20/1	0.30	MISC FUEL EQUIP	R
R	RCPT POS SYSTEM	0.40	20/1		25	A	26		20/1	0.40	RCPT POS SYSTEM	R
R	RCPT POS SYSTEM	0.40	20/1		27	B	28		20/1	0.20	RCPT POS SYSTEM	R
R	RCPT POS SYSTEM	0.40	20/1		29	C	30		20/1	0.20	RCPT POS SYSTEM	R
R	RCPT POS SYSTEM	0.40	20/1		31	A	32		20/1	0.20	RCPT U/C SAFE	R
R	RCPT POS SYSTEM	0.40	20/1		33	B	34		20/1	0.40	RCPT PRINTER	R
R	RCPT POS SYSTEM	0.40	20/1		35	C	36		20/1	0.30	MISC FUEL EQUIP	R
R	RCPT POS SYSTEM	0.40	20/1		37	A	38		20/1	0.40	RCPT POS SYSTEM	R
R	RCPT U/C SAFE	0.20	20/1		39	B	40		20/1	0.20	RCPT POS SYSTEM	R
R	RCPT PRINTER	0.40	20/1		41	C	42		20/1	0.20	RCPT POS SYSTEM	R
R	MISC FUEL EQUIP	0.30	20/1		43	A	44		20/1	0.20	RCPT POS SYSTEM	R
R	RCPT U/C SAFE	0.20	20/1		45	B	46		20/1	0.18	RCPT RM 107	R
R	RCPT PRINTER	0.40	20/1		47	C	48		20/1	0.20	RCPT U/C SAFE	R
R	MISC FUEL EQUIP	0.30	20/1		49	A	50		20/1	0.40	RCPT PRINTER	R
R	RCPT RM 110	0.54	20/1		51	B	52		20/1	0.30	MISC FUEL EQUIP	R
R	RCPT TV	0.72	20/1		53	C	54		20/1	0.40	RCPT POS SYSTEM	R
R	RCPT OFFICE 102A	0.54	20/1		55	A	56		20/1	0.20	RCPT POS SYSTEM	R
R	MERCHANDISER	2.49	30/2		57	B	58		20/1	0.20	RCPT POS SYSTEM	R
R		2.49			59	C	60		20/1	0.20	RCPT POS SYSTEM	R
R	MERCHANDISER	2.49	30/2		61	A	62		30/2	2.49	MERCHANDISER	R
R		2.49			63	B	64			2.49		R
R	MERCHANDISER	2.49	30/2		65	C	66		20/1		SPARE	
R		2.49			67	A	68		20/1		SPARE	
	SPARE		20/1		69	B	70		20/1		SPARE	
	SPARE		20/1		71	C	72		20/1		SPARE	
	SPARE		20/1		73	A	74		20/1		SPARE	
	SPARE		20/1		75	B	76		20/1		SPARE	
	SPARE		20/1		77	C	78		20/1		SPARE	
	SPARE		20/1		79	A	80		20/1		SPARE	
	SPARE		20/1		81	B	82		20/1		SPARE	
	SPARE		20/1		83	C	84		20/1		SPARE	

\\Files\Active\Projects\2023\23000902.00\Design\Electrical\20250606 Task Force Reference\Panel Schedules\Electrical Panels.xls

PANEL: L4A

CONN. LOAD: 45.3 KW DEMAND LOAD: 41.1 KVA NQOD TYPE
125.6 AMPS 114.1 AMPS SQUARE D
MAIN: 250A MCB VOLTAGE: 208|120 , 3PH, 4W. AIC: 10,000
MTG: SURFACE LOCATION: KITCHEN NORTH ACTUAL AIC: X

LOAD TYPE	REMARKS	KW	BKR.	OPT	CIRCUIT NUMBER AND PHASE			OPT	BKR.	KW	REMARKS	LOAD TYPE
R	TV LAUNDRY 141	0.18	20/1		1	A	2		20/1	0.18	RCPT RM 143J	R
	SPARE		20/1		3	B	4		20/1	0.18	RCPT RM 143H	R
	SPARE		20/1		5	C	6		20/1	0.18	RCPT RM 143G	R
	SPARE		20/1		7	A	8		20/1	0.18	RCPT RM 143F	R
	SPARE		20/1		9	B	10		20/1	0.18	RCPT RM 143E	R
	SPARE		20/1		11	C	12		20/1	0.18	RCPT RM 143D	R
	SPARE		20/1		13	A	14		20/1	0.18	RCPT RM 143C	R
	SPARE		20/1		15	B	16		20/1	0.18	RCPT RM 143B	R
R	RCPT 140	0.18	20/1		17	C	18		20/1	0.18	RCPT RM 143A	R
R	RCPT 142	0.18	20/1		19	A	20		20/1	0.18	RCPT TV	R
R	RCPT 138	1.08	20/1		21	B	22		20/2	1.00	WASHER	M
	SPARE		20/1		23	C	24		30/2	2.50	DRYER	M
A	ITEM 001	1.80	20/1		25	A	26			2.50		M
A	ITEM 001	1.80	20/1		27	B	28		20/2	1.00	WASHER	M
A	ITEM 001.1	0.19	20/1		29	C	30		30/2	2.50	DRYER	M
A	ITEM 001.2	1.50	20/2		31	A	32			2.50		M
A		1.50			33	B	34		20/2	1.00	WASHER	M
A	ITEM 001.3	1.02	20/2		35	C	36		30/2	2.50	DRYER	M
A		1.02			37	A	38			2.50		M
A	ITEM 001.4	1.50	20/2		39	B	40		20/2	1.00	WASHER	M
A		1.50			41	C	42		30/2	2.50	DRYER	M
	SPARE		20/1		43	A	44			2.50		M
	SPARE		20/1		45	B	46		20/2	1.00	WASHER	M
	SPARE		20/1		47	C	48		30/2	2.50	DRYER	M
	SPARE		20/1		49	A	50			2.50		M
	SPARE		20/1		51	B	52		20/1		SPARE	
	SPARE		20/1		53	C	54		20/1		SPARE	
	SPARE		20/1		55	A	56		20/1		SPARE	
	SPARE		20/1		57	B	58		20/1		SPARE	
	SPARE		20/1		59	C	60		20/1		SPARE	
	SPARE		20/1		61	A	62		20/1		SPARE	
	SPARE		20/1		63	B	64		20/1		SPARE	
	SPARE		20/1		65	C	66		20/1		SPARE	

ALL REPORTS, SPECIFICATIONS, COMPUTER FILES, FIELD DATA AND OTHER DOCUMENTATION PREPARED BY KASPER ARCHITECTURE & DEVELOPMENT, INC. (KAD) AS INSTRUMENTS OF SERVICE SHALL REMAIN THE PROPERTY OF KAD. KAD SHALL RETAIN ALL COMMON LAW, STATUTORY AND OTHER RESERVED RIGHTS, INCLUDING THE COPYRIGHT THERETO. THIS DRAWING SHALL NEVER BE REPRODUCED IN WHOLE OR IN PART WITHOUT THE EXPRESS WRITTEN PERMISSION OF KAD

kasper architects + assoc.
10175 Fortune Parkway, Suite 701
Jacksonville, FL 32256
p 904.683.9201 f 904.683.9702
www.kasperarch.com
FL License No.: AA26000802

IMEG
formerly McVeigh & Mangum Engineering
www.IMEGCorp.com
9133 B.G. Skinner Parkway
Jacksonville, Florida 32256
Ph: (904) 493-5200 Fax: (904) 636-6700
email: mail@McVeighMangum.com
CA 6330
Eng. of Record:
License No.:

1 ALL DESIGN PRIOR TO 08/28/2025 WAS PERFORMED BY IMEG UNDER THE RESPONSIBLE CHARGE OF THOMAS C. NIELSEN, PE #53492. ALL SUBSEQUENT DESIGN BY IMEG IS UNDER THE RESPONSIBLE CHARGE OF BRIAN J. LEAVITT, PE #87733.

BRIAN J. LEAVITT LICENSE No. 87733 STATE OF FLORIDA PROFESSIONAL ENGINEER

Brian Leavitt

Digitally signed by Brian Leavitt
Reason: This item has been electronically signed and sealed by Brian J. Leavitt, PE using a Digital Signature and Seal. Printed copies of this document are not considered signed and sealed and the signature must be verified on any electronic copies.
Date: 2025.08.28 14:56:58-05'00'

BUSY BEE
ELLISVILLE

136 SW WEBBS GLN
LAKE CITY, FL 32024

PROJECT NO.: 22024
DATE: 06/02/2025
PRIOR ISSUES:
1 08/24/2025 ASI #1

ELECTRICAL
PANEL
SCHEDULES

E7.1

DRAWN BY: IMEG
CHECKED BY: IMEG

100%
CONSTRUCTION
DOCUMENTS

© 2013

\\Files\Active\Projects\2023\23000902.00\Design\Electrical\20250606 Task Force Reference\Panel Schedules\Electrical Panels.xls

PANEL: L4B

CONN. LOAD: 20.3 KW DEMAND LOAD: 18.1 KVA NQOD TYPE
56.3 AMPS 50.2 AMPS SQUARE D
MAIN: 250A MLO VOLTAGE: 208 120 , 3PH, 4W. AIC: 10,000
MTG: SURFACE LOCATION: KITCHEN NORTH ACTUAL AIC: X

LOAD TYPE	REMARKS	KW	BKR.	OPT	CIRCUIT NUMBER AND PHASE			OPT	BKR.	KW	REMARKS	LOAD TYPE
R	RCPT U/C SAFE	0.20	20/1		1	A	2		20/1	0.36	J-BOX DOOR	R
R	RCPT PRINTER	0.40	20/1		3	B	4		20/1	0.36	J-BOX DOOR	R
R	MISC FUEL EQUIP	0.30	20/1		5	C	6		20/1	0.18	TV POS 139	R
R	RCPT POS SYSTEM	0.40	20/1		7	A	8		20/1		SPARE	
R	RCPT POS SYSTEM	0.20	20/1		9	B	10		20/1		SPARE	
R	RCPT POS SYSTEM	0.20	20/1		11	C	12		20/1		SPARE	
R	RCPT POS SYSTEM	0.20	20/1		13	A	14		20/1	0.25	DWEF-1	H
R	RCPT POS SYSTEM	0.20	20/1		15	B	16		20/1	1.08	RCPT ROOF	R
R	RCPT U/C SAFE	0.20	20/1		17	C	18		20/1	0.72	RCPT ROOF	R
R	RCPT PRINTER	0.40	20/1		19	A	20		20/1	0.36	RCPT ROOF	R
R	MISC FUEL EQUIP	0.30	20/1		21	B	22		20/1	0.90	RCPT ROOF	R
H	DCU-1/DSS-1	1.00	20/2		23	C	24		20/1	0.72	RCPT ROOF	R
H		1.00			25	A	26		20/1	0.72	RCPT ROOF	R
R	RCPT CORR	0.72	20/1		27	B	28		20/1	1.50	ICE MACHINE	A
R	RCPT RM 133	1.08	20/1		29	C	30		20/1	1.50	ICE MACHINE	A
R	RCPT OFF 139A	0.72	20/1		31	A	32		20/1	1.50	ICE MACHINE	A
R	RCPT OFF 134	0.72	20/1		33	B	34		20/1	1.00	J-BOX CORR	R
R	RCPT RM 138	0.90	20/1		35	C	36		20/1		SPARE	
	SPARE		20/1		37	A	38		20/1		SPARE	
	SPARE		20/1		39	B	40		20/1		SPARE	
	SPARE		20/1		41	C	42		20/1		SPARE	
	SPARE		20/1		43	C	44		20/1		SPARE	
	SPARE		20/1		45	C	46		20/1		SPARE	
	SPARE		20/1		47	C	48		20/1		SPARE	
	SPARE		20/1		49	C	50		20/1		SPARE	
	SPARE		20/1		51	C	52		20/1		SPARE	
	SPARE		20/1		53	C	54		20/1		SPARE	
	SPARE		20/1		55	C	56		20/1		SPARE	
	SPARE		20/1		57	C	58		20/1		SPARE	
	SPARE		20/1		59	C	60		20/1		SPARE	
	SPARE		20/1		61	C	62		20/1		SPARE	
	SPARE		20/1		63	C	64		20/1		SPARE	
	SPARE		20/1		65	C	66		20/1		SPARE	

\\Files\Active\Projects\2023\23000902.00\Design\Electrical\20250606 Task Force Reference\Panel Schedules\Electrical Panels.xls

PANEL: LK1B

CONN. LOAD: 102.9 KW DEMAND LOAD: 68.9 KVA NQOD TYPE
285.7 AMPS 191.2 AMPS SQUARE D
MAIN: 400A MCB VOLTAGE: 208 120 , 3PH, 4W. AIC: 22,000
MTG: SURFACE LOCATION: KITCHEN NORTH ACTUAL AIC: X

LOAD TYPE	REMARKS	KW	BKR.	OPT	CIRCUIT NUMBER AND PHASE			OPT	BKR.	KW	REMARKS	LOAD TYPE
R	ITEM 801	2.00	25/2		1	A	2			6.92		R
R		2.00			3	B	4		30/3	6.92	ITEM 804	R
R	ITEM 801	2.00	25/2		5	C	6			6.92		R
R		2.00			7	A	8			6.92		R
R	ITEM 801	2.00	25/2		9	B	10		30/3	6.92	ITEM 804	R
R		2.00			11	C	12			6.92		R
M		4.14			13	A	14			6.92		R
M	ITEM 504	4.14	45/3		15	B	16		30/3	6.92	ITEM 804	R
M		4.14			17	C	18			6.92		R
M		4.14			19	A	20		20/1	1.11	ITEM 806	R
M	ITEM 504	4.14	45/3		21	B	22		20/1	1.11	ITEM 806	R
M		4.14			23	C	24		20/1	1.11	ITEM 806	R
R	ITEM 505	0.12	20/1		25	A	26		20/1	0.36	RCPT TV 128	R
	SPARE		20/1		27	B	28		20/1		SPARE	
	SPARE		20/1		29	C	30		20/1		SPARE	
	SPARE		20/1		31	A	32		20/1		SPARE	
	SPARE		20/1		33	B	34		20/1		SPARE	
	SPARE		20/1		35	C	36		20/1		SPARE	
	SPARE		20/1		37	A	38		20/1		SPARE	
	SPARE		20/1		39	B	40		20/1		SPARE	
	SPARE		20/1		41	C	42		20/1		SPARE	

\\Files\Active\Projects\2023\23000902.00\Design\Electrical\20250606 Task Force Reference\Panel Schedules\Electrical Panels.xls

PANEL: LK3

CONN. LOAD: 79.4 KW DEMAND LOAD: 48.2 KVA NQOD TYPE
220.4 AMPS 133.9 AMPS SQUARE D
MAIN: 400A MCB VOLTAGE: 208 120 , 3PH, 4W. AIC: 22,000
MTG: SURFACE LOCATION: KITCHEN SOUTH ACTUAL AIC: X

LOAD TYPE	REMARKS	KW	BKR.	OPT	CIRCUIT NUMBER AND PHASE			OPT	BKR.	KW	REMARKS	LOAD TYPE
R	ITEM G103	1.00	20/1		1	A	2		20/1	1.38	ITEM G100	M
R	ITEM G113	1.00	20/1		3	B	4		20/1	0.80	ITEM G111	R
R	ITEM G100	1.38	20/1		5	C	6		20/1	0.48	ITEM D201	R
R	ITEM G112	1.00	20/1		7	A	8		20/1	1.00	ITEM G110	R
R	ITEM G100	1.00	20/1		9	B	10		20/1	1.38	ITEM G101	M
R	ITEM G100	1.00	20/1		11	C	12		20/1	1.00	ITEM G109	R
R	ITEM C251	0.48	20/1		13	A	14		20/1	1.38	ITEM G100	M
R	ITEM A353	0.30	20/1		15	B	16		20/1	1.00	ITEM G108	R
R	ITEM A355	0.30	20/1		17	C	18		20/1	3.40	ITEM B302	R
R	ITEM A354	0.89	20/2		19	A	20		20/1	0.36	ITEM B303	M
R		0.89			21	B	22		20/1	0.36	ITEM B302	M
R	ITEM A356	3.80	20/1		23	C	24		20/1	2.16	ITEM 308	R
R	ITEM A356	3.80	20/1		25	A	26		20/1	2.16	ITEM 308	R
R	ITEM A358	2.70	30/2		27	B	28		20/1	0.36	ITEM B303	M
R		2.70			29	C	30		20/1	0.36	ITEM B305	R
R	ITEM E451	0.48	20/1		31	A	32		20/1	2.16	ITEM B301	R
R	ITEM G107	1.00	20/1		33	B	34		20/1	2.16	ITEM B301	R
R	TVS STORE 110	1.08	20/1		35	C	36		20/1	0.36	ITEM B303	M
R	ITEM A354	0.89	20/2		37	A	38		20/1	2.16	ITEM B301	R
R		0.89			39	B	40		20/1		SPARE	
A	ITEM G102	0.11	20/1		41	C	42		20/1		SPARE	
A	ITEM G106	0.90	20/1		43	A	44		20/1		SPARE	
A	ITEM G106	0.90	20/1		45	B	46		20/1	0.48	ITEM F401	R
	SPARE		20/1		47	C	48		20/1	13.00	ITEM F402	R
	SPARE		20/1		49	A	50		20/1	13.00	ITEM F402	R
	SPARE		20/1		51	B	52		20/1		SPARE	
	SPARE		20/1		53	C	54		20/1		SPARE	
	SPARE		20/1		55	A	56		20/1		SPARE	
	SPARE		20/1		57	B	58		20/1		SPARE	
	SPARE		20/1		59	C	60		20/1		SPARE	
	SPARE		20/1		61	A	62		20/1		SPARE	
	SPARE		20/1		63	B	64		20/1		SPARE	
	SPARE		20/1		65	C	66		20/1		SPARE	

\\Files\Active\Projects\2023\23000902.00\Design\Electrical\20250606 Task Force Reference\Panel Schedules\Electrical Panels.xls

PANEL: KE1

CONN. LOAD: 32.5 KW DEMAND LOAD: 32.5 KVA NQOD TYPE
90.2 AMPS 90.2 AMPS SQUARE D
225A MCB SHUNT VOLTAGE: 208 120 , 3PH, 4W. AIC: 10,000
SURFACE LOCATION: ACTUAL AIC: X

REMARKS	KW	BKR.	OPT	CIRCUIT NUMBER AND PHASE			OPT	BKR.	KW	REMARKS	LOAD TYPE
ITEM 200	1.80	20/1		1	A	2		15/1	0.84	ITEM 207	R
ITEM 200.1 CNTRL	1.80	20/1		3	B	4		15/1	0.24	ITEM 207	R
ITEM 200.1 LTG	1.80	20/1		5	C	6		15/1	1.08	ITEM 206	R
ITEM 200.1 EX	0.90	20/3		7	A	8		15/2	1.10	ITEM 205	R
FAN/KEF-1	0.90			9	B	10			1.10		R
	0.90			11	C	12		15/2	0.90	ITEM 204	R
ITEM 200.1 SP	4.86	70/3		13	A	14			0.90		R
FAN/KMAU-1	4.86			15	B	16		15/2	0.90	ITEM 204	R
	4.86			17	C	18			0.90		R
ITEM 202.1	0.06	15/1		19	A	20		20/1	1.80	ITEM 202	R
SPARE		20/1		21	B	22		20/1		SPARE	
SPARE		20/1		23	C	24		20/1		SPARE	
SPARE		20/1		25	A	26		20/1		SPARE	
SPARE		20/1		27	B	28		20/1		SPARE	
SPARE		20/1		29	C	30		20/1		SPARE	
SPARE		20/1		31	A	32		20/1		SPARE	
SPARE		20/1		33	B	34		20/1		SPARE	
SPARE		20/1		35	C	36		20/1		SPARE	
SPARE		20/1		37	A	38		20/1		SPARE	
SPARE		20/1		39	B	40		20/1		SPARE	
SPARE		20/1		41	C	42		20/1		SPARE	

\\Files\Active\Projects\2023\23000902.00\Design\Electrical\20250606 Task Force Reference\Panel Schedules\Electrical Panels.xls

PANEL: LK2

CONN. LOAD: 44.6 KW DEMAND LOAD: 27.3 KVA NQOD TYPE
123.8 AMPS 75.8 AMPS SQUARE D
MAIN: 250A MCB VOLTAGE: 208 120 , 3PH, 4W. AIC: 10,000
MTG: SURFACE LOCATION: KITCHEN SOUTH ACTUAL AIC: X

LOAD TYPE	REMARKS	KW	BKR.	OPT	CIRCUIT NUMBER AND PHASE			OPT	BKR.	KW	REMARKS	LOAD TYPE
R	ITEM E01	0.80	15/1		1	A	2		20/1	3.00	ITEM E04	R
R	ITEM E02	1.73	15/1		3	B	4		35/2	3.75	ITEM E05	R
R	ITEM E02	1.73	15/1		5	C	6			3.75		
R	ITEM E02	1.73	15/1		7	A	8		35/2	3.75	ITEM E05	R
R	ITEM E02	1.73	15/1		9	B	10			3.75		
R	ITEM E03	1.80	15/1		11	C	12		15/1	0.80	ITEM E01	R
R	ITEM E03	1.80	15/1		13	A	14		20/1	0.70	ITEM E06	R
R	ITEM E04	3.00	20/1		15	B	16		20/1	0.70	ITEM E06	R
R	ITEM E04	3.00	20/1		17	C	18		20/1	0.70	ITEM E06	R
R	ITEM E04	3.00	20/1		19	A	20		30/2	0.13	ITEM E07	R
R	ITEM E04	3.00	20/1		21	B	22			0.13		R
R	ITEM E04	3.00	20/1		23	C	24		30/2	0.13	ITEM E07	R
R	GENERAL RCPTS	0.90	20/1		25	A	26			0.13		R
R	GENERAL RCPTS	0.54	20/1		27	B	28		30/2	0.13	ITEM E07	R
R	ITEM E08	0.60	20/1		29	C	30			0.13		R
R	ITEM E08	0.60	20/1		31	A	32		30/2	0.13	ITEM E07	R
R	ITEM E08	0.60	20/1		33	B	34			0.13		R
R	ITEM E08	0.60	20/1		35	C	36		20/1		SPARE	
	SPARE		20/1		37	A	38		20/1		SPARE	
	SPARE		20/1		39	B	40		20/1		SPARE	
	SPARE		20/1		41	C	42		20/1		SPARE	
	SPARE		20/1		43	C	44		20/1		SPARE	
	SPARE		20/1		45	C	46		20/1		SPARE	
	SPARE		20/1		47	C	48		20/1		SPARE	
	SPARE		20/1		49	C	50		20/1		SPARE	
	SPARE		20/1		51	C	52		20/1		SPARE	
	SPARE		20/1		53	C	54		20/1		SPARE	
	SPARE		20/1		55	C	56		20/1		SPARE	
	SPARE		20/1		57	C	58		20/1		SPARE	
	SPARE		20/1		59	C	60		20/1		SPARE	
	SPARE		20/1		61	C	62		20/1		SPARE	
	SPARE		20/1		63	C	64		20/1		SPARE	
	SPARE		20/1		65	C	66		20/1		SPARE	

\\Files\Active\Projects\2023\23000902.00\Design\Electrical\20250606 Task Force Reference\Panel Schedules\Electrical Panels.xls

PANEL: LK4

CONN. LOAD: 58.2 KW DEMAND LOAD: 34.1 KVA NQOD TYPE
161.6 AMPS 94.7 AMPS SQUARE D
MAIN: 225A MCB VOLTAGE: 208 120 , 3PH, 4W. AIC: 10,000
MTG: SURFACE LOCATION: ACTUAL AIC: X

LOAD TYPE	REMARKS	KW	BKR.	OPT	CIRCUIT NUMBER AND PHASE			OPT	BKR.	KW	REMARKS	LOAD TYPE
R	ITEM # E2	0.97	20/1		1	A	2		20/1	0.30	ITEM # E9A	R
R	ITEM # E3	1.00	20/2		3	B	4		20/1	0.30	ITEM # E9B	R
		1.00			5	C	6		20/1	0.32	ITEM # E10	R
R	ITEM # E5A	0.36	20/1		7	A	8		40/2	3.10	ITEM # E11	R
R	ITEM # E5B	0.36	20/1		9	B	10			3.10		R
R	ITEM # E7A	0.50	20/1		11	C	12		50/3	4.66	ITEM # E12A	R
R	ITEM # E7B	0.50	20/1		13	A	14			4.66		R
R	ITEM # E13	1.70	20/1		15	B	16			4.66		R
R	ITEM # E16	0.85	20/2		17	C	18		50/3	4.66	ITEM # E12B	R
R		0.85			19	A	20			4.66		R
R	ITEM # E17A	1.00	20/1		21	B	22		20/1	0.75	ITEM # E19	R
R	ITEM # E17B	1.60	20/1		23	C	24			0.10		R
R	ITEM # E24	1.20	20/1		25	A	26		20/3	0.10	ITEM # E20	R
R	ITEM # E27	1.60	20/1		27	B	28			0.10		R
R	ITEM # E28	1.60	20/1		29	C	30		20/1	1.60	ITEM # E29A	
R	ITEM # E29A	1.60	20/1		31	A	32		20/1		SPARE	
R	ITEM # E29B	1.60	20/1		33	B	34		20/1		SPARE	
R	ITEM # E29C	1.60	20/1		35	C	36		20/1		SPARE	
R	ITEM # E29D	1.60	20/1		37	A	38		20/1		SPARE	
R	ITEM # E29E	1.60	20/1		39	B	40		20/1		SPARE	
	SPARE		20/1		41	C	42		20/1		SPARE	
	SPARE		20/1		43	C	44		20/1		SPARE	
	SPARE		20/1		45	C	46		20/1		SPARE	
	SPARE		20/1		47	C	48		20/1		SPARE	
	SPARE		20/1		49	C	50		20/1		SPARE	
	SPARE		20/1		51	C	52		20/1		SPARE	
	SPARE		20/1		53	C	54		20/1		SPARE	
	SPARE		20/1		55	C	56		20/1		SPARE	
	SPARE		20/1		57	C	58		20/1		SPARE	
	SPARE		20/1		59	C	60		20/1		SPARE	
	SPARE		20/1		61	C	62		20/1		SPARE	
	SPARE		20/1		63	C	64		20/1		SPARE	
	SPARE		20/1		65	C	66		20/1		SPARE	

\\Files\Active\Projects\2023\23000902.00\Design\Electrical\20250606 Task Force Reference\Panel Schedules\Electrical Panels.xls

PANEL: LK1A

CONN. LOAD: 60.2 KW DEMAND LOAD: 42.6 KVA NQOD TYPE
167.0 AMPS 118.1 AMPS SQUARE D
MAIN: 250A MCB VOLTAGE: 208 120 , 3PH, 4W. AIC: 22,000
MTG: SURFACE LOCATION: KITCHEN NORTH ACTUAL AIC: X

LOAD TYPE	REMARKS	KW	BKR.	OPT	CIRCUIT NUMBER AND PHASE			OPT	BKR.	KW	REMARKS	LOAD TYPE
R		5.88			1	A	2		20/1	0.56	ITEM 404	M
R	ITEM 902	5.88	70/3		3	B	4		20/1	0.24	ITEM 406	R
R		5.88			5	C	6		20/1	0.12	ITEM 406.1	R
R	ITEM 907	1.44	20/2		7	A	8		20/1	1.22	ITEM 402	M
R		1.44			9	B	10		20/1	1.22	ITEM 402	M
R	CHEF OFFICE	0.54	20/1		11	C	12		20/1	1.40	ITEM 408	M
M	ITEM 303	0.38	20/1		13	A	14		20/1	1.40	ITEM 408	M
M	ITEM 304	0.38	20/1		15	B	16		20/1	0.30	ITEM 501	M
M	ITEM 300	0.89	20/1		17	C	18		20/1	0.90	ITEM 502	M
M	ITEM 208	1.14	20/1		19	A	20		20/1	0.67	ITEM 503	R
A	LABEL MAKER	1.00	20/1		21	B	22		20/1	1.92	ITEM 700	R
A	WRAPPING	1.00	20/1		23	C	24		20/1	1.92	ITEM 700	R
A	LABEL MAKER	1.00	20/1		25	A	26		20/1	1.92	ITEM 700	R
A	WRAPPING	1.00	20/1		27	B	28		20/1	1.92	ITEM 700	R
A	LABEL MAKER	1.00	20/1		29	C	30		20/1	1.22	ITEM 701	M
A	WRAPPING	1.00	20/1		31	A	32		25/2	2.00	ITEM 801	R
	SPARE		20/1		33	B	34			2.00		R
	SPARE		20/1		35	C	36		25/2	2.00	ITEM 801	R
	SPARE		20/1		37	A	38			2.00		R
	SPARE		20/1		39	B	40		25/2	2.00	ITEM 801	R
M	ITEM 202	0.51	20/1		41	C	42			2.00		R
	SPARE		20/1		43	C	44		20/1	0.18	RCPT PREP AREA	R
	SPARE		20/1		45	C	46		20/1	0.18	RCPT PREP AREA	R
	SPARE		20/1		47	C	48		20/1	0.18	RCPT PREP AREA	R
	SPARE		20/1		49	C	50		20/1	0.36	RCPT	R
	SPARE		20/1		51	C	52		20/1		SPARE	
	SPARE		20/1		53	C	54		20/1		SPARE	
	SPARE		20/1		55	C	56		20/1		SPARE	
	SPARE		20/1		57	C	58		20/1		SPARE	
	SPARE		20/1		59	C	60		20/1		SPARE	
R	ITEM 100	0.12	20/1		61	C	62		20/1		SPARE	
R	ITEM 100	0.12	20/1		63	C	64		20/1		SPARE	
R	ITEM 103	0.42	20/1		65	C	66		20/1		SPARE	
R	ITEM 104	0.13	20/1		67	C	68		20/1		SPARE	
R	ITEM 105	0.48	20/1		69	C	70		20/1		SPARE	
R	ITEM 108	0.37	20/1		71	C	72		20/1		SPARE	
R		0.37	20/1		73	C	74		20/1		SPARE	
	ITEM 100	0.12	20/1		75	C	76		20/1		SPARE	
	SPARE		20/1		77	C	78		20/1		SPARE	
	SPARE		20/1		79	C	80		20/1		SPARE	
	SPARE		20/1		81	C	82		20/1		SPARE	
	SPARE		20/1		83	C	84		20/1		SPARE	

\\Files\Active\Projects\2023\23000902.00\Design\Electrical\20250606 Task Force Reference\Panel Schedules\Electrical Panels.xls

PANEL: LP1

CONN. LOAD: 49.3 KW DEMAND LOAD: 61.7 KVA NQOD TYPE
59.3 AMPS 74.2 AMPS SQUARE D
MAIN: 250A MCB VOLTAGE: 480 277 , 3PH, 4W. AIC: 30,000
MTG: SURFACE LOCATION: ACTUAL AIC: X

LOAD TYPE	REMARKS	KW	BKR.	OPT	CIRCUIT NUMBER AND PHASE			OPT	BKR.	KW	REMARKS	LOAD TYPE
L	SITE LTG	2.16	20/1		1	A	2		20/1	2.16	SITE LTG	L
L	SITE LTG	2.37	20/1		3	B	4		20/1	2.37	SITE LTG	L
L	SITE LTG	2.44	20/1		5	C	6		20/1	2.15	SITE LTG	L
L	FUTURE CANOPY		20/1		7	A	8		20/1	3.67	LTG STORE 110	L
L	LTG STORE 110	3.97	20/1		9	B	10		20/1	3.82	LTG STORE 110	L
L	LTG STORE	2.81	20/1		11	C	12		20/1	1.65	LTG VEST & 103B	L
L	LTG RESTROOMS	2.11	20/1		13	A	14		20/1	2.52	LTG BOH	L
L	LTG BLDG EXT.	4.36	20/1		15	B	16		20/1	0.10	EXIT SIGNS	L
L	LTG EMERGENCY	2.24	20/1		17	C	18		20/1	2.22	LTG EMERGENCY	L
L	LTG EMERGENCY	2.20	20/1		19	A	20		20/1	1.93	LTG EMERGENCY	L
L	LTG EMERGENCY	2.07	20/1		21	B	22		20/1		SPARE	
	SPARE		20/1		23	C	24		20/1		SPARE	
	SPARE		20/1		25	A	26		20/1		SPARE	
	SPARE		20/1		27	B	28		20/1		SPARE	
	SPARE		20/1		29	C	30		20/1		SPARE	
	SPARE		20/1		31	A	32		20/1		SPARE	
	SPARE		20/1		33	B	34		20/1		SPARE	
	SPARE		20/1		35	C	36		20/1		SPARE	
	SPARE		20/1		37	A	38		20/1		SPARE	
	SPARE		20/1		39	B	40		20/1		SPARE	
	SPARE		20/1		41	C	42		20/1		SPARE	

kasper architects + assoc.
10175 Fortune Parkway, Suite 701
Jacksonville, FL 32256
p 904.683.9201 f 904.683.9702
www.kasperarch.com
FL License No.: AA26000802

IMEG
formerly McVeigh & Mangum Engineering
www.IMEGCorp.com
9133 R.G. Skinner Parkway
Jacksonville, Florida 32256
Ph: (904) 483-5200 Fax: (904) 636-6700
email: mail@McVeighMangum.com
CA 6330
Eng. of Record: Thomas C. Nielsen
License No.: 53492

1 ALL DESIGN PRIOR TO 08/28/2025 WAS PERFORMED BY IMEG UNDER THE RESPONSIBLE CHARGE OF THOMAS C. NIELSEN, PE #53492. ALL SUBSEQUENT DESIGN BY IMEG IS UNDER THE RESPONSIBLE CHARGE OF BRIAN J. LEAVITT, PE #87733.

BRIAN JOSEPH LEAVITT LICENSE No. 87733 STATE OF FLORIDA PROFESSIONAL ENGINEER

Brian Leavitt

Digitally signed by Brian Leavitt
Reason: This item has been electronically signed and sealed by Brian J. Leavitt PE using a Digital Signature and Signature Date. Printed copies of this document are not considered signed and sealed and the signature must be verified on any electronic copies.
Date: 2025.08.28 14:57:17-05'00'

BUSY BEE
ELLISVILLE

136 SW WEBBS GLN
LAKE CITY, FL 32024

PROJECT NO.: 22024
DATE: 06/02/2025
PRIOR ISSUES:

1	08/24/2025	ASI #1

ELECTRICAL PANEL SCHEDULES

E7.2

DRAWN BY: IMEG
CHECKED BY: IMEG

100% CONSTRUCTION DOCUMENTS

© 2013

ALL REPORTS, SPECIFICATIONS, COMPUTER FILES, FIELD DATA, AND OTHER DOCUMENTATION PREPARED BY KASPER ARCHITECTURE & DEVELOPMENT, INC. (KAD) AS INSTRUMENTS OF SERVICE SHALL REMAIN THE PROPERTY OF KAD. KAD SHALL RETAIN ALL COMMON LAW, STATUTORY AND OTHER RESERVED RIGHTS, INCLUDING THE COPYRIGHT THERETO. THIS DRAWING SHALL NEVER BE REPRODUCED IN WHOLE OR IN PART WITHOUT THE EXPRESS WRITTEN PERMISSION OF KAD.

SECTION 26 05 00 - BASIC ELECTRICAL REQUIREMENTS

PART 1 - GENERAL

1.1 SECTION INCLUDES

A. Requirements applicable to all Division 26 Sections. Also refer to Division 1 - General Requirements.

B. All materials and installation methods shall conform to the applicable standards, guidelines and codes referenced herein and within each specification section.

1.2 SCOPE OF WORK

A. This Specification and the associated drawings govern furnishing, installing, testing and placing into satisfactory operation the Electrical Systems.

B. The Contractor shall furnish and install all new materials as indicated on the drawings, and/or in these specifications, and all items required to make the portion of the Electrical Work a finished and working system.

C. CONTRACTOR COORDINATION Definitions:

1. Contractor Coordination: A compilation of the pertinent layout and system drawings that show the sizes and locations, including elevations, of system components and required access areas to ensure that no two objects will occupy the same space.

D. General:

1. The contract drawings are schematic in nature and do not show every fitting and appurtenance for each utility. Each contractor is expected to have included in the bid sufficient fittings, material, and labor to allow for adjustments in routing of utilities made necessary by the coordination process and to provide a complete and functional system.

2. The contractors will not be allowed additional costs or time extensions due to participation in the coordination process.

3. The contractors will not be allowed additional costs or time extensions for additional fittings, reroutings or changes of duct size, that are essentially equivalent sizes to those shown on the drawings and determined necessary through the coordination process.

4. The Architect/Engineer reserves the right to determine space priority of equipment in the event of spatial conflicts or interference between equipment, piping, conduit, ducts, and equipment provided by the trades.

5. Changes to the contract documents that are necessary for systems installation and coordination shall be brought to the attention of the Architect/Engineer.

6. Access panels shall be provided where required for servicing electrical equipment. Coordinate work to minizine the number of access panels required.

1.3 QUALITY ASSURANCE{QUALITY ASSURANCE}

A. Contractor's Responsibility Prior to Submitting Pricing/Bid Data:

1. The Contractor is responsible for constructing complete and operating systems. The Contractor acknowledges and understands that the Contract Documents are a two-dimensional representation of a three-dimensional object, subject to human interpretation. This representation may include imperfect data, interpreted codes, utility guides, three-dimensional conflicts, and required field coordination items. Such deficiencies can be corrected when identified prior to ordering material and starting installation. The Contractor agrees to carefully study and compare the individual Contract Documents and report at once in writing to the Architect/Engineer any deficiencies the Contractor may discover. The Contractor further agrees to require each subcontractor to likewise study the documents and report at once any deficiencies discovered.

2. The Contractor shall resolve all reported deficiencies with the Architect/Engineer prior to awarding any subcontracts, ordering material, or starting any work with the Contractor's own employees. Any work performed prior to receipt of instructions from the Architect/Engineer will be done at the Contractor's risk.

B. Compliance with Codes, Laws, Ordinances:

1. Conform to all requirements of the State of Florida Codes, Laws, Ordinances and other regulations having jurisdiction.

2. If the Contractor notes, at the time of bidding, that any parts of the drawings or specifications do not comply with the codes or regulations, Contractor shall inform the Architect/Engineer in writing, requesting a clarification. If there is insufficient time for this procedure, Contractor shall submit with the proposal a separate price to make the system comply with the codes and regulations.

3. All changes to the system made after the letting of the contract to comply with codes or the requirements of the Inspector, shall be made by the Contractor without cost to the Owner.

4. If there is a discrepancy between manufacturer's recommendations and these specifications, the manufacturer's recommendations shall govern.

C. Permits, Fees, Taxes, Inspections:

1. Procure all applicable permits and licenses.

D. Examination of Drawings:

1. The drawings for the electrical work are completely diagrammatic, intended to convey the scope of the work and to indicate the general arrangements and locations of equipment, outlets, etc., and the approximate sizes of equipment.

2. Contractor shall determine the exact locations of equipment and rough-ins, and the exact routing of raceways to best fit the layout of the job. Conduit entry points for electrical equipment including, but not limited to, panelboards, switchboards, switchgear and unit substations, shall be determined by the Contractor unless noted in the contract documents.

3. Scaling of the drawings will not be sufficient or accurate for determining these locations.

4. Where job conditions require reasonable changes in arrangements and locations, such changes shall be made by the Contractor at no additional cost to the Owner.

5. Because of the scale of the drawings, certain basic items, such as junction boxes, pull boxes, conduit fittings, etc., may not be shown, but where required by other sections of the specifications or required for proper installation of the work, such items shall be furnished and installed.

6. If an item is either shown on the drawings or called for in the specifications, it shall be included in this contract.

7. The Contractor shall determine quantities and quality of material and equipment required from the documents. Where discrepancies arise between drawings, schedules and/or specifications, the greater and better-quality number shall govern.

8. Where used in electrical documents the word "furnish" shall mean supply for use, the word "install" shall mean connect up complete and ready for operation, and the word "provide" shall mean to supply for use and connect up complete and ready for operation.

9. Any item listed as furnished shall also be installed unless otherwise noted.

10. Any item listed as installed shall also be furnished unless otherwise noted.

1.4 SUBMITTALS[BR1] {SUBMITTALS}

A. Submittals shall be provided as described in Architectural Specifications. Submittals shall be required where required elsewhere in the specifications or on the drawings.

B. General Submittal Procedures: In addition to the provisions of Division 1, the following are required:

1.5 PRODUCT DELIVERY, STORAGE, HANDLING and MAINTENANCE

A. Equipment and components that are visibly damaged or have been subject to environmental conditions prior to building turnover to Owner that could shorten the life of the component (for example, water damage, humidity, dust and debris, excessive hot or cold storage location, etc,) shall be repaired or replaced with new equipment or components without additional cost to the building owner.

B. Contractor is responsible for moving equipment into the building and/or site. Contractor shall review site prior to bid for path locations and any required building modifications to allow movement of equipment. Contractor shall coordinate the work with other trades.

1.6 MATERIAL SUBSTITUTION

A. the first manufacturer for which a catalog number is given is the basis for job design and establishes the quality.

B. Equivalent equipment manufactured by the other listed manufacturers may be used. Contractor shall ensure that all items submitted by these other manufacturers meet all requirements of the drawings and specifications and fits in the allocated space. When using other listed manufacturers, the Contractor shall assume responsibility for any and all modifications necessary (including, but not limited to structural supports, electrical connections and rough-in, and regulatory agency approval, etc.) and coordinate such with other contractors. The Architect/Engineer shall make the final determination of whether a product is equivalent.

C. Any material, article or equipment of other unnamed manufacturers which will adequately perform the services and duties imposed by the design and is of a quality equal to or better than the material, article or equipment identified by the drawings and specifications may be used if approval is secured in writing from the Architect/Engineer via addendum. The Contractor assumes all costs incurred as a result of using the offered material, article or equipment, on the Contractors part or on the part of other Contractors whose work is affected.

PART 2 - PRODUCTS

2.1 GENERAL

A. All items of material having a similar function (e.g., safety switches, panelboards, switchboards, contactors, motor starters, dry type transformers) shall be of the same manufacturer unless specifically stated otherwise on drawings or elsewhere in specifications.

PART 3 - EXECUTION

3.1 JOBSITE SAFETY

A. Neither the professional activities of the Architect/Engineer, nor the presence of the Architect/Engineer or the employees and subconsultants at a construction site, shall relieve the Contractor and any other entity of their obligations, duties and responsibilities including, but not limited to, construction means, methods, sequence, techniques or procedures necessary for performing, superintending or coordinating all portions of the work of construction in accordance with the contract documents and any health or safety precautions required by any regulatory agencies. The Architect/Engineer and personnel have no authority to exercise any control over any construction contractor or other entity or their employees in connection with their work or any health or safety precautions. The Contractor is solely responsible for jobsite safety. The Architect/Engineer and the Architect/Engineer's consultants shall be indemnified and shall be made additional insureds under the Contractor's general liability insurance policy.

3.2 EXCAVATION, FILL, BACKFILL, COMPACTION

A. General:

1. Prior to the commencement of any excavation or digging, the Contractor shall verify all underground utilities with the regional utility locator. Provide prior notice to the locator before excavations. Contact information for most regional utility locaters can be found by calling 811.

2. The Contractor shall do all excavating, filling, backfilling, compacting, and restoration in connection with the work.

B. Excavation:

1. Make all excavations to accurate, solid, undisturbed earth, and to proper dimensions.

2. If excavations are carried in error below indicated levels, concrete of same strength as specified for the foundations or thoroughly compacted sand-gravel fill, as determined by the Architect/Engineer shall be placed in such excess excavations under the foundation. Place thoroughly compacted, clean, stable fill in excess excavations under slabs on grade, at the Contractor's expense.

3. Trim bottom and sides of excavations to grades required for foundations.

4. Protect excavations against frost and freezing.

5. Take care in excavating not to damage surrounding structures, equipment or buried pipe. Do not undermine footing or foundation.

6. Perform all trenching in a manner to prevent cave-ins and risk to workmen.

7. Where original surface is pavement or concrete, the surface shall be saw cut to provide clean edges and assist in the surface restoration.

8. If satisfactory bearing soil is not found at the indicated levels, immediately notify the Architect/Engineer or their representative, and do no further work until the Architect/Engineer or their representative gives further instructions.

9. Excavation shall be performed in all ground conditions, including rock, if encountered. Bidders shall visit the premises and determine the soil conditions by actual observations, borings, or other means. The cost of all such inspections, borings, etc., shall be borne by the bidder.

10. If a trench is excavated in rock, a compacted bed with a depth of 3" (minimum) of sand and gravel shall be used to support the conduit unless masonry cradles or encasements are used.

11. Mechanical excavation of the trench to line and grade of the conduit or to the bottom level of masonry cradles or encasements is permitted, unless otherwise indicated on the electrical drawings.

12. Mechanical excavation of the trench to line and grade where direct burial cables are to be installed is permitted provided the excavation is made to a depth to permit installation of the cable on a fine sand bed at least 3 inches deep.

C. Dewatering:

1. Furnish, install, operate and remove all dewatering pumps and pipes needed to keep trenches and pits free of water.

D. Fill and Backfilling:

1. Backfill materials (native soil material, sand, and/or CA6) shall be suitable for required compaction, clean and free of perishable materials, frozen earth, debris, earth with a high void content, and stones greater than 4 inches in diameter. Water is not permitted to rise in unbackfilled trenches.

E. Surface Restoration:

1. Where trenches are cut through graded, planted or landscaped areas, the areas shall be restored to the original condition. Replace all planting and landscaping features removed or damaged to its original condition. All lawn areas shall be sodded unless seeding is called out in the drawings or specifications.

2. Concrete or asphalt type pavement, seal coat, rock, gravel or earth surfaces removed or damaged shall be replaced with comparable materials and restored to original condition. Broken edges shall be saw cut and repaired as directed by Architect/Engineer.

INSTRUCTING THE OWNER'S REPRESENTATIVE

A. Adequately instruct the Owner's designated representatives in the maintenance, care, and operation of the complete systems installed under this contract.

3.3 RECORD DOCUMENTS

A. Maintain at the job site a separate and complete set of electrical drawings and specifications with all changes made to the systems clearly and permanently marked in complete detail.

3.4 ADJUST AND CLEAN

A. Thoroughly clean all equipment and systems prior to the Owner's final acceptance of the project.

3.5 SPECIAL REQUIREMENTS

A. Coordinate the installation of all equipment, controls, devices, etc., with other trades to maintain clear access area for servicing.

3.6 B. Install all equipment to maximize access to parts needing service or maintenance. Review the final location, placement, and orientation of equipment with the Owner's representative prior to setting equipment.

C. Installation of equipment or devices without regard to coordination of access requirements and confirmation with the Owner's representative will result in removal and reinstallation of the equipment at the Contractor's expense.

SYSTEM STARTING AND ADJUSTING

A. The electrical systems shall be complete and operating. System startup, testing, adjusting, and balancing to obtain satisfactory system performance is the responsibility of the Contractor. This includes all calibration and adjustment of electrical controls, balancing of loads, troubleshooting and verification of software, and final adjustments that may be needed.

3.7

B. Complete all manufacturer-recommended startup procedures and checklists to verify proper equipment operation and does not pose a danger to personnel or property.

C. All operating conditions and control sequences shall be tested during the start-up period. Testing all interlocks, safety shut-downs, controls, and alarms.

D. The Contractor, subcontractors, and equipment suppliers shall have skilled technicians to ensure that all systems perform properly. If the Architect/Engineer is requested to visit the job site for trouble shooting, assisting in start-up, obtaining satisfactory equipment operation, resolving installation and/or workmanship problems, equipment substitution issues or unsatisfactory system performance, including call backs during the warranty period, through no fault of the design; the Contractor shall reimburse the Owner on a time and materials basis for services rendered at the Architect/Engineer's standard hourly rates in effect when the services are requested. The Contractor shall pay the Owner for services required that are product, installation or workmanship related. Payment is due within 30 days after services are rendered.

FIELD QUALITY CONTROL

A. General:

3.8 1. Conduct all tests required during and after construction. Submit test results in NETA format, or equivalent form, that shows the test equipment used, calibration date, tester's name, ambient test conditions, humidity, conductor length, and results corrected to 40°C.

2. Supply necessary instruments, meters, etc., for the tests. Supply competent technicians with training in the proper testing techniques.

3. All cables and wires shall be tested for shorts and grounds following installation and connection to devices. Replace shorted or grounded wires and cables.

4. Any wiring device, electrical apparatus or luminaire, if grounded or shorted on any integral "live" part, shall have all defective parts or materials replaced.

5. Test cable insulation of service and panel feeder conductors for proper insulation values. Tests shall include the cable, all splices, and all terminations. Each conductor shall be tested and shall test free of short circuits and grounds and have an insulation value not less than Electrical Code Standards. Take readings between conductors, and between conductors and ground.

6. If the results obtained in the tests are not satisfactory, make adjustments, replacements, and changes as needed. Then repeat the tests, and make additional tests, as the Architect/Engineer or authority having jurisdiction deems necessary.

END OF SECTION 26 05 00

SECTION 26 05 13 - WIRE AND CABLE

PART 1 - GENERAL

PART 2 - PRODUCTS

2.1 BUILDING WIRE

A. Feeders and Branch Circuits 8 AWG and larger: Copper, stranded conductor, 600-volt insulation, THHN/THWN or XHHW-2.

B. Feeders and Branch Circuits 8 AWG and larger: Aluminum, AA-8000 series alloy, compact stranded conductor, 600-volt insulation, USE-2/RHH/RHW-2 or XHHW-2.

1. Aluminum conductors shall only be allowed for the following:

a. Service entrance when approved by power company.

b. Panel feeders.

C. Feeders and Branch Circuits 8 AWG and larger in Underground Conduit: Copper, stranded conductor, 600-volt insulation, XHHW-2.

D. Feeders 8 AWG and larger in Underground Conduit: Aluminum, AA-8000 series alloy, compact stranded conductor, 600-volt insulation, USE-2/RHH/RHW-2.

E. Feeders and Branch Circuits 10 AWG and Smaller: Copper, solid or stranded conductor, 600-volt insulation, THHN/THWN, unless otherwise noted on the drawings. Aluminum, compact stranded conductor is not acceptable for feeder and branch circuits 6 AWG and smaller.

F. Motor Feeder from Variable Frequency Drives: Copper conductor, 600-volt XHHW-2 insulation, stranded conductor, unless otherwise noted on the drawings.

G. Control Circuits: Copper, stranded conductor 600-volt insulation, THHN/THWN.

H. Aluminum conductors are not to be used for feeds to motor loads.

I. Each 120 and 277-volt branch circuit shall have a dedicated neutral conductor. Neutral conductors shall be considered current-carrying conductors for wire derating.

2.2 CABLING FOR REMOTE CONTROL, SIGNAL, AND POWER LIMITED CIRCUITS

A. Wire for the following specialized systems shall be as designated on the drawings, or elsewhere in these specifications. If not designated on the drawings or specifications, the system manufacturer's recommendations shall be followed.

1. Fire alarm

2. Low voltage switching and lighting control

3. Electronic control

B. Control Cable for Class 1 Remote Control and Signal Circuits: Copper conductor, 600-volt insulation, rated 60°C, individual conductors twisted together, shielded, and covered with a PVC jacket.

C. Control Cable for Class 2 or Class 3 Remote Control and Signal Circuits: Copper conductor, 300-volt insulation, rated 60°C, individual conductors twisted together, shielded, and covered with a PVC jacket; UL listed.

D. Plenum Cable for Class 2 or Class 3 Remote Control and Signal Circuits: Copper conductor, 300-volt insulation, rated 60°C, individual conductors twisted together, shielded, and covered with a nonmetallic jacket; UL listed for use in air handling ducts, hollow spaces used as ducts, and plenums.

2.3 METAL-CLAD CABLE (MC)

A. Conductors shall be copper, 600-volt insulation, THHN. Metal clad cable shall be constructed in strict accordance with Underwriters Laboratories, Inc. Standard for Metal-Clad Cables, UL 15694, exterior of metal interlocked armor.

B. Minimum conductor size for branch circuit wiring shall be 12 AWG, with larger wires used where specified.

C. Metal-clad cables may be used for branch circuit wiring as defined in the Electrical Code, subject to acceptance by State and local codes.

PART 3 - EXECUTION

3.1 CONTRACTOR CHANGES

A. The basis of design is copper conductors installed in raceway based on ambient temperature of 30°C, NEC Table 310.16 (2011 - 2017 edition 310.15(B)(16))

B. The Contractor shall be responsible for derating and sizing conductors and conduits to equal or exceed the ampacity of the basis of design circuits, if he/she chooses to use methods or materials other than the basis of design.

C. Conductor length(s) listed on plans and schedules. The drawings are diagrammatic with intent to convey the components of the electrical distribution system. Conductor length(s) when listed on plans and schedules are for engineering calculation purposes. Conductor length(s) shall NOT be used for bidding purposes.

END OF SECTION 26 05 13

SECTION 26 05 26 - GROUNDING AND BONDING

PART 1 - GENERAL

PART 2 - PRODUCTS

2.1 GROUNDING CONDUCTORS

A. For insulated conductors, comply with Division 26 Section 26 05 13 "Wire and Cable".

B. Material: Copper

C. Equipment Grounding Conductors: Insulated. Refer to Section 26 05 53 for insulation color.

D. Grounding Electrode Conductors: Stranded cable.

E. Underground Conductors: Bare, tinned, stranded, unless otherwise indicated.

F. Copper Bonding Conductors: As follows:

1. Bonding Cable: 28 kcmil, 14 strands of No. 17 AWG copper conductor, 1/4 inch in diameter.

2. Bonding Conductor: No. 4 or No. 6 AWG, stranded copper conductor.

3. Bonding Jumper: Bare copper tape, braided bare copper conductors, terminated with copper ferrules; 1-5/8 inches wide and 1/16 inch thick.

4. Tinned Bonding Jumper: Tinned-copper tape, braided copper conductors, terminated with copper ferrules; 1-5/8 inches wide and 1/16 inch thick.

G. GB; Grounding Bar:

1. Bare, annealed copper bars of rectangular cross section, with insulators. 1/4" x 2", length in technology or applicable room.

H. IBT; Intersystem Bonding Termination:

1. Copper bar, 1/4" x 2" x 24". Provide with wall mounting brackets, insulators and pre-tapped holes.

2. Manufacturers:

a. Harger GBI Series.

b. Erico EGB Series.

2.2 CONNECTOR PRODUCTS

A. Comply with UL 467; listed for use for specific types, sizes, and combinations of conductors and connected items.

PART 3 - EXECUTION

3.1 GROUNDING ELECTRODE SYSTEM

A. Ground Ring (Counterpoise):

1. Ground the steel framework of the building with a driven ground rod at the base of every corner column and at intermediate exterior columns at average distances not more than 60 feet (18 m) apart. Provide a grounding conductor, electrically connected to each ground rod and to each steel column, extending around the perimeter of the building. Use tinned-copper conductor not less than No. 2 AWG for ground ring and for tap to building steel. Bury conductor not less than 30 inches (760 mm) below grade, 24 inches (600 mm) from building foundation, and 18 inches (459 mm) outside of roof drip line.

B. Supplementary Grounding Electrode: Use driven ground rod on exterior of building.

C. Provide bonding at Utility Company's metering equipment and pad mounted transformer.

D. Ground Rods: Install at least two rods spaced at least 20 feet from each other and located at least the same distance from other grounding electrodes.

1. Drive ground rods until tops are 12 inches below finished floor or final grade, unless otherwise indicated.

2. Interconnect ground rods with grounding electrode conductors. Use exothermic welds, except at test wells and as otherwise indicated. Make connections without exposing steel or damaging copper coating.

E. Metal Water Service Pipe: Provide insulated copper grounding conductors, in conduit, from building's main service equipment, or grounding bus, to main metal water service entrances to building. Connect grounding conductors to main metal water service pipes by grounding clamp connectors. Where a dielectric main water fitting is installed, connect grounding conductor to street side of fitting. Bond metal grounding conductor conduit or sleeve to conductor at each end.

F. Water Meter Piping: Use braided-type bonding jumpers to electrically bypass water meters, filtering devices, and similar equipment. Connect to pipe with grounding clamp connectors.

G. Natural Gas Service Piping: Bond to natural gas main service with grounding clamp connectors. Bonding conductor shall be connected to the main service ground bar. Provide grounding jumpers around all breaks in metallic continuity.

H. Natural Gas Equipment Piping: Bond each aboveground portion of natural gas metallic piping system at each equipment location with grounding clamp connectors. Bonding shall be performed after any flexible attachment nearest the equipment. The equipment grounding conductors may serve as the bonding means.

3.2 FIELD QUALITY CONTROL

A. Inspect grounding and bonding system conductors and connections for tightness and proper installation.

END OF SECTION 26 05 26

SECTION 26 05 27 - SUPPORTING DEVICES

PART 1 - GENERAL

PART 2 - PRODUCTS

2.1 MANUFACTURERS

A. Allied Support Systems

B. Cooper B-Line

C. Erico, Inc.

D. Hilti

E. Power Fasteners

F. Orbit Industries

2.2 MATERIAL

A. Support Channel: Hot-dip galvanized for wet/damp locations; painted steel for interior/dry locations. All field cut ends shall be touched up with matching finish to inhibit rusting.

B. Hardware: Corrosion resistant.

C. Anchorage and Structural Attachment Components:

1. Strength: Defined in reports by ICBO Evaluation Service or another agency acceptable to Authorities Having Jurisdiction.

a. Structural Safety Factor: Strength in tension and shear of components used shall be at least two times the maximum seismic forces to which they will be subjected.

2. Through Bolts: Structural type, hex head, high strength. Comply with ASTM A 325.

3. Welding Lugs: Comply with MSS-SP-69, Type 57.

4. Beam clamps for Steel Beams and Joists: Double sided or concentric open web joist hangars. Single-sided type is not acceptable.

5. Bushings for Floor-Mounted Equipment Anchors: Neoprene units designed for seismically rated rigid equipment mountings, and matched to the type and size of anchor bolts and studs used.

6. Bushing Assemblies for Wall-Mounted Equipment Anchorage: Assemblies of neoprene elements and steel sleeves designed for seismically rated rigid equipment mountings, and matched to the type and size of attachment devices used.

7. Concrete Anchors: Fasten to concrete using cast-in or post-installed anchors designed per the requirements of Appendix D of ACI 318-05. Post-installed anchors shall be qualified for use in cracked concrete by ACI-355.2.

8. Masonry Anchors: Fasten to concrete masonry units with expansion anchors or self-tapping masonry screws. For expansion anchors into hollow concrete block, use sleeve-type anchors designed for the specific application. Do not fasten in masonry joints. Do not use powder actuated fasteners, wooden plugs, or plastic inserts.

D. Conduit Sleeves and Lintels:

1. Each Contractor shall provide, to the General Contractor for installation, lintels for all openings required for the Contractor's work in masonry walls and conduit sleeves for floors, unless specifically shown as being by others.

2. Refer to Structural General Notes for lintel requirements in masonry construction.

3. Refer to Structural plans and specifications for lintel requirements and sizes.

4. Lintels:

a. Lintels in non-bearing masonry wall openings can be sized in accordance with the note below. Lintels that occur in existing bearing walls are to be sized according to similar conditions and spans in the new construction and lintel schedule. Bottom plate size shall be a minimum of 3/8" thick. The width of the plate shall be 3/4" less than the field verified wall thickness. The plate shall be the full length of the lintel member. Lintels are not required over openings that are 12" wide or less and at least 1 course below the top of the wall.

b. All lintels shall have a minimum of 8" end bearing.

c. All lintels in exterior wall construction shall be hot-dip galvanized.

d. For all openings not otherwise detailed or scheduled, minimum lintels shall be for each 4 inch of masonry width:

1) 0 to 2'-0" span: 5/16" plate (3/4" less than wall width)

2) 2'-0" to 4'-0" span: L 3 1/2 x 3 1/2 x 1/4

3) 4'-0" to 6'-0" span: L4 x 3 1/2 x 5/16 (llv)

4) 6'-0" to 8'-0" span: L5 x 3 1/2 x 5/16 (llv)

e. All angles that are back to back shall be welded top and bottom 3" at 12" minimum.

5. Fabricate all lintels from structural steel shapes or as indicated on the drawings. All lintels and grouped wall openings shall be approved by the Architect or Structural Engineer.

6. Fabricate all sleeves from standard weight black steel pipe. Provide continuous sleeve. Cut or split sleeves are not acceptable. Sleeves through concrete walls may be high density polyethylene pipe penetration sleeve with a water stop collar, suitable for use with Link-Seal mechanical seals. Century-Line Model CS.

7. Sleeves through the floors on exposed risers shall be flush with the ceiling, with planed squared ends extending 1" above the floor in unfinished areas, and flush with the floor in finished areas, to accept spring closing floor plates.

8. Sleeves shall not penetrate structural members without approval from the Structural Engineer.

9. Openings through unexcavated floors and/or foundation walls below the floor shall have a smooth finish with sufficient annular space around material passing through opening so slight settling will not place stress on the material or building structure.

10. Install all sleeves concentric with conduits. Secure sleeves in concrete to wood forms. This Contractor is responsible for sleeves dislodged or moved when pouring concrete.

11. Where conduits rise through concrete floors that are on earthen grade, provide 3/4" resilient expansion joint material (asphalt and cork) wrapped around the pipe, the full depth of concrete, at the point of penetration. Secure to prevent shifting during concrete placement and finishing.

12. Size sleeves large enough to allow expansion and contraction movement.

E. Concrete Housekeeping Pads:

1. Concrete bases for all floor mounted equipment and wall mounted equipment which is surface mounted and extends to within 6" of the finished floor, unless shown otherwise on the drawings, shall be 3-1/2" thick concrete.

F. Rooftop Support System:

1. Provide pre-fabricated roof supports for all conduit and equipment installed above the roof. Support all conduit and equipment a minimum of 4" above roof.

2. Support system shall be compatible with single ply, bituminous, metal, and spray foam roof systems. The base shall be rounded to prevent damage to the roof, and drainage holes shall prevent ponding of water in the support.

3. All metal components shall be hot dipped galvanized. Mounting hardware shall be stainless steel or hot dipped galvanized. Support shall be UV, corrosion, and freeze/thaw resistant. Support shall include orange paint, reflective safety orange accents, or similar markings for increased visibility.

4. Products:

a. Anvil International HBS-Base Series

b. Cooper B-Line Dura-Blok

c. Erico Caddy Pyramid 50, 150, 300, or 600 (to match load).

G. Truss and Joist Support System: Provided the installation complies with all loading requirements of truss and joist manufacturers, the following practices are acceptable:

1. Loads of 100 lbs. (45 kg) or less may be attached anywhere along the top or bottom chords of trusses or joists with a minimum 3' (900 mm) spacing between loads.

2. Loads greater than 100 lbs. (45 kg) must be hung concentrically and may be hung from top or bottom chord, provided one of the following conditions is met:

a. The hanger is attached within 6" (150 mm) from a web/chord joint.

b. Additional L2x2x1/4 (L51x51x6.4 ASTM A36 structural steel) web reinforcement is installed per manufacturer's requirements.

3. It is prohibited to cantilever a load using an angle or other structural component that is attached to a truss or joist in such a fashion that a torsional force is applied to that structural member.

4. If conditions cannot be met, coordinate installation with truss or joist manufacturer and contact Architect/Engineer.

H. Cable Ties for Cable Management Systems:

1. Cables ties, UL Listed, Type 21 or Type 21S, and test to UL Standard 62275 for Cable Management Systems.

2. Acceptable Applications: Low Voltage Wire and Cabling.

a. Bundle wires and cables within cable trays, auxiliary gutters, and similar applications.

b. Organize and support wiring and cables within equipment and distribution systems.

END OF SECTION 26 05 27

SECTION 26 05 33 - CONDUIT AND BOXES

PART 1 - GENERAL

PART 2 - PRODUCTS

2.1 RIGID METALLIC CONDUIT (RMC) AND FITTINGS

A. Minimum Size Galvanized Steel: 3/4 inch (19mm), unless otherwise noted.

B. PVC Externally Coated Conduit: Compliant with NEMA RN 1; rigid galvanized steel conduit with external 40 mil PVC coating and internal 2 mil urethane coating surface. All fittings and conduit bodies shall be complete with coating.Threads shall be hot galvanized and coated with a clear coat of urethane. The PVC coated system shall include necessary PVC coated fittings, boxes and covers to form a complete encapsulated system.

2.2 INTERMEDIATE METALLIC CONDUIT (IMC) AND FITTINGS

A. Minimum Size Galvanized Steel: 3/4 inch, unless otherwise noted.

2.3 ELECTRICAL METALLIC TUBING (EMT) AND FITTINGS

A. Minimum Size Electrical Metallic Tubing: 3/4 inch, unless otherwise noted.

B. Fittings and Conduit Bodies:

1. 2" Diameter or Smaller: Compression or steel set screw type of steel designed for their specific application.

2. 1/2" and 3/4" Conduit: Push-on connectors and couplers with locking ring and washer of zinc plated steel, listed for use in dry locations.

3. Larger than 2": Compression or steel set screw type of steel designed for their specific application.

2.4 FLEXIBLE METALLIC CONDUIT (FMC) AND FITTINGS

A. Minimum Size Galvanized Steel: 3/4 inch, unless otherwise noted. Lighting branch circuit wiring to an individual luminaire may be a manufactured, UL listed 3/8" flexible metal conduit and fittings with #14 AWG THHN conductors and an insulated ground wire. Maximum length of 3/8" FMC shall be six (6) feet.

B. Construction: Flexible steel, approved for conduit ground, zinc coated, threadless type formed from a continuous length of spirally wound, interlocked zinc coated strip steel. Provide a separate equipment grounding conductor when used for equipment where flexibility is required.

C. Fittings and Conduit Bodies:

1. Threadless hinged clamp type, galvanized zinc coated cadmium plated malleable cast iron.

2. Fittings and conduit bodies shall include plastic or cast metal inserts supplied by the manufacturer to protect conductors from sharp edges.

2.5 LIQUIDTIGHT FLEXIBLE METALLIC CONDUIT (LFMC) AND FITTINGS

A. Construction: Flexible steel, approved for conduit ground, zinc coated, threadless type formed from a continuous length of spirally wound, interlocked zinc coated strip steel and an extruded PVC cover.

B. Fittings and Conduit Bodies:

1. Watertight, compression type, galvanized zinc coated cadmium plated malleable cast iron, UL listed.

2. Fittings and conduit bodies shall include plastic or cast metal inserts supplied by the manufacturer to protect conductors from sharp edges.

2.6 RIGID NON-METALLIC CONDUIT (PVC) AND FITTINGS

A. Minimum Size Rigid Smooth-Wall Nonmetallic Conduit: 3/4 inch, unless otherwise noted.

B. Construction: Schedule 40 and Schedule 80 rigid polyvinyl chloride (PVC), UL labeled for 90°C.

C. Fittings and Conduit Bodies: NEMA TC 3; sleeve type suitable for and manufactured especially for use with the conduit by the conduit manufacturer.

2.7 OUTLET BOXES

A. Sheet Metal Outlet Boxes: ANSI/NEMA OS 1; galvanized steel, 16 gauge (approximately 0.0625 inches), with 1/2-inch male fixture studs where required.

B. Cast Boxes: Nema FB1, Type FD, Aluminum, cast feralloy, or stainless steel deep type, gasketed cover, threaded hubs.

C. Outlet boxes for luminaires to be not less than 1-1/2" deep, deeper if required by the number of wires or construction. The box shall be coordinated with surface luminaires to conceal the box from view or provide a finished trim plate.

D. Switch outlet boxes for local light control switches, dimmers and occupancy sensors shall be 4 inches square by 2-1/8 inches deep, with raised cover to fit flush with finish wall line. Multiple gang switch outlets shall consist of the required number of gang boxes appropriate to the quantity of switches comprising the gang. Where walls are plastered, provide a plaster raised cover. Where switch outlet boxes occur in exposed concrete block walls, boxes shall be installed in the block cavity with a raised square edge tile cover of sufficient depth to extend out to face of block or masonry boxes.

E. Outlet boxes for telephone substations in walls and columns shall be 4 inches square and 2-1/8 inches deep with single gang raised cover to fit flush with finished wall line equipped with flush telephone plate.

F. Wall or column receptacle outlet boxes shall be 4 inches square with raised cover to fit flush with finished wall line. Boxes in concrete block walls shall be installed the same as for switch boxes in block walls.

2.8 ECONN; ELECTRICAL CONNECTION

A. Electrical connection to equipment and motors, sized per Electrical Code. Coordinate requirements with contractor furnishing equipment or motor. Refer to specifications and general installation notes for terminations to motors.

2.9 JB; PULL AND JUNCTION BOXES

A. Sheet Metal Boxes: ANSI/NEMA OS 1; galvanized steel.

B. Sheet metal boxes larger than 12 inches in any dimension that contain terminations or components: Continuous hinged enclosure with 1/4 turn latch and white back panel for mounting terminal blocks and electrical components.

C. Cast Metal Boxes for Outdoor and Wet Location Installations: NEMA 250; Type 4 and Type 6, flat-flanged, surface-mounted junction box, UL listed as raintight. Galvanized cast iron box and cover with ground flange, neoprene gasket, and stainless steel cover screws.

D. Cast Metal Boxes for Underground Installations: NEMA 250; Type 4, inside flanged, recessed cover box for flush mounting, UL listed as raintight. Galvanized cast iron box and plain cover with neoprene gasket and stainless steel cover screws.

E. Flanged type boxes shall be used where installed flush in wall.

2.10 ROUGH-IN

A. Provide with one (1) flush mount double gang box with single gang plaster ring and appropriate cover plate,

B. Conduit stubbed to above the lay-in ceiling.

2.11 HANDHOLES

A. Handhole, composite polymer concrete body and cover. Stainless steel hardware. Bolted non-skid cover rated for 5,000,10,000,20,000 pounds as required for each application/location where installed. Design load occasional non-deliberate vehicular traffic. Units in landscaped areas shall be green in color.11"W, 18"L, 18"D minimum or as required for each application.

B. Handhole, cast iron, hot dipped galvanized with checkered cover sidewalk weatherproof box, flat neoprene cover gasket. Stainless steel screw hardware. Mounted flush in concrete. 12"W, 18"L, 12"D minimum or as required for each application.

C. Handhole, concrete traffic box and galvanized steel checkered cover. Stainless steel hardware. Bolted cover and box rated for H/20 vehicular traffic. Reinforced concrete slab for bottom. 11"W, 18"L, 24"D minimum or as required for each application.

2.12 FOUNDATION - UNDERGROUND SLEEVES AND SEALS

A. Wall Seals ("Link-Seals"):

1. Raceways passing through foundation walls to an underground condition shall have their annual space (sleeve or drilled hole - not tapered hole made with knockout plug) sealed by properly sized sealing element consisting of a synthetic rubber material compounded to resist aging, ozone, sunlight, water and chemical action.

2. Sleeves, if used, shall be standard weight steel with primed finish and waterstop/anchor continuously welded to sleeve.

3. Sleeves shall be at least 2 trade sizes larger than the penetrating raceway.

4. Pressure shall be maintained by stainless steel bolts and accessories. Pressure plates may be of composite materials for Models S and OS.

5. Sealing Elements shall be as follows:

Model	Service	Element Material	Temperature Range
S	Standard (Stainless)	EPDM	-40°F (-40°C) to 250°F (121°C)
T	Fire Seals (1 hour)	Silicone	-67°F (-55°C) to 400°F (204°C)
FS	Fire Seals (3 hours)	Silicone	-67°F (-55°C) to 400°F (204°C)
OS	Oil Resistant / Stainless	Nitrile	-40°F (-40°C) to 210°F (99°C)

6. Approved Manufacturers:

a. Thunderline Corporation "Link-Seals"

b. O-Z/Gedney Company

c. Calpico, Inc

d. Innerlynx

e. Polywater PGKD Series

2.13 RACEWAY SEALS AND SEALANT

A. Duct Sealant: Field applied expandable duct sealant, closed cell field cured, water tight, air tight. Identified for use with electrical cables, conductors, and raceways. Minimum liquid withstanding of 10-feet head of water (5 PSI). Compatible with conductors and raceways, UL94 Flammability Certified.

1. NOT ALLOWED. Duct seal putty, all-purpose construction sealant.

2. Manufacturers:

a. Polywater FST / AFT Series

b. Approved equal

B. Duct Seal Bushing: Custom mechanical seal, liquid tight, gas tight, stainless steel hardware. Minimum liquid withstanding of 10-feet head of water (5 PSI). Coordinate product with raceway size, cable quantities, and cable sizes.

1. Manufacturers:

a. Polywater PHRD / PHSD Series Varia /PHSI Module Series

b. Jackmoon Commscope DuctPlug Series

c. CalAm Manufacturing WedgeSeal Series

2.14 ACCESSORIES

A. Fire Rated Moldable Pads: UL #9700, moldable sheet putty at required thickness on all five sides of back boxes. Kinetics Noise Control - IsoBacker Pad, SpecSeal - SSP Putty and Pads, 3M #MPP-4S or equal.

B. Sound Barrier Insulation Pads: Mastic, non-hardening, sheet material, minimum 1/8" thickness applied to all five sides of back boxes. Kinetics Noise Control - SealTight Backer Pad, L.H. DOTTIE Co., #68 or equal.

END OF SECTION 26 05 33

SECTION 26 05 53 - ELECTRICAL IDENTIFICATION

PART 1 - GENERAL

PART 2 - PRODUCTS

2.1 ADHESIVE MARKINGS AND FIELD LABELS

A. Underground Plastic Markers: Bright colored continuously printed plastic ribbon tape of not less than 6 inches wide by 4 mil thick, printed legend indicating type of underground line, manufactured for direct burial service. Tape shall contain a continuous metallic wire to allow location with a metal detector.

B. Indoor/Outdoor Number and Letters: Outdoor grade vinyl label with acrylic adhesive designed for permanent application in severe indoor and outdoor environments.

2.2 NAMEPLATES AND SIGNS

A. Engraved, Plastic-Laminated Labels, Signs and Instruction Plates: Engraving stock melamine plastic laminate, 1/16-inch (2mm) minimum thick for signs up to 20 square inches (13 square cm), or 8 inches (200mm) in length; 1/8 inch (3mm) thick for larger sizes. Labels shall be punched for mechanical fasteners.

B. Text Sizes:

1. The following information shall be used for text heights, fonts, and size, unless otherwise noted.

a. Text Height: 3/8 inch (10mm) minimum

C. Exterior, Metal-Backed, Butyrate Signs: Weather-resistant, nonfading, preprinted, cellulose-acetate butyrate signs with 0.0396 inch (10mm) galvanized-steel backing: and with colors, legend, and size required for application. Mounting 1/4" grommets in corners.

D. Safety Signs: Comply with 29 CFR, Chapter XVII, Part 1910.145.

E. Fasteners for Plastic-Laminated Signs; Self-tapping stainless steel screws or number 10/32 stainless steel machine screws with nuts and flat and lock washers.

2.3 PRODUCT COLORS

A. Adhesive Markings and Field Labels:

1. All Labels: Black letters on white face

2. Fire Alarm: Red letters on white face

3. Emergency: Red letters on white face

B. Nameplates and Signs:

1. NORMAL POWER: Black letters on white face

2. EMERGENCY: White letters on red face

3. GROUNDING: White letters on green face.

4. CAUTION or UPS: Black letters on yellow face

C. Box Covers:

1. Box covers shall be painted to correspond with system type as follows:

a. Normal Power and General: Silver

b. Fire Alarm System: Red

D. Conductor Color Identification: Refer to Part 3 for additional information.

PART 3 - EXECUTION

3.1 INSTALLATION

A. Lettering and Graphics: Coordinate names, abbreviations, colors, and other designations used in electrical identification work with corresponding designations specified or indicated. Install numbers, lettering, and colors as required by code.

B. Circuit Identification: Tag or label conductors as follows:

1. Multiple Power or Lighting Circuits in Same Enclosure: Where multiple branch circuits are terminated or spliced in a box or enclosure, label each conductor with source and circuit number.

2. Multiple Control Wiring and Communication/Signal Circuits in Same Enclosure: For control and communications/signal wiring, use wire/cable marking tape at terminations in wiring boxes, troughs, and control cabinets. Use consistent letter/number conductor designations throughout on wire/cable marking tape.

3. Match identification markings with designations used in panelboards shop drawings, Contract Documents, and similar previously established identification schemes for the facility's electrical installations.

C. Apply Danger, Warning, Caution and instruction signs as follows:

1. Install Danger, Warning, Caution or instruction signs where required by Electrical Code, where indicated, or where reasonably required to assure safe operation and maintenance of electrical systems and of the items to which they connect. Install engraved plastic-laminated instruction signs with approved legend where instructions or explanations are needed for system or equipment operation. Install metal-backed butyrate signs for outdoor items.

2. 'Danger' indicates a hazardous situation which, if not avoided, will result in death or serious injury. ANSI standard red background, white letters.

3. 'Warning' indicates a hazardous situation which, if not avoided, could result in death or serious injury. ANSI standard orange background, black letters.

4. 'Caution' indicates a hazardous situation which, if not avoided, may result in minor or moderate injury. ANSI standard yellow background, black letters.

5. Emergency Operating Signs: Install, where required by Electrical Code, where indicated, or where reasonably required to assure safe operation and maintenance of electrical systems and of the items to which they connect, engraved laminate signs with white legend on red background with minimum 3/8-inch (10mm) high lettering for emergency instructions on power transfer, load shedding, or other emergency operations.

D. Apply circuit/control/item designation labels of engraved plastic laminate for pushbuttons, pilot lights, alarm/signal components, and similar items, except where labeling is specified elsewhere.

E. Install labels parallel to equipment lines at locations as required and at locations for best convenience of viewing without interference with operation and maintenance of equipment.

F. Install ARC FLASH WARNING signs on all power distribution equipment per Section 26 05 73.

G. Underground Electrical Lines: For exterior underground power, control, signal, and communication lines, install continuous underground plastic line marker located directly above line at 6 (150mm) to 8 (205mm) inches below grade. A single plastic line marker is permitted when the width of the common trench does not exceed 16 inches (405mm); provide a second plastic line marker to mark each edge of the trench when 16 inches (405mm) of width is exceeded. Install line marker for underground wiring, both direct-buried cables and cables in raceway.

3.2 FEEDER AND BRANCH CIRCUIT DIRECTORIES

A. Product:

1. Adhesive labels and field markings

2. Nameplates and signs

B. Feeder Directories Branch: Provide each feeder, branch circuit, feeder modification, and branch circuit modification with a typed circuit directory label. Refer to technical equipment specification sections for additional requirements. Include the following with each label:

1. Load Description: Lighting, receptacles, specific equipment, spare, space, or similar description.

2. Location: Room name, number, location.

C. Provide a factory or custom clear plastic sleeve for each branch panel directory and secure to inside panel cover.

3.3 LIGHTING CONTROL AND RECEPTACLE COVER PLATES

A. Product:

1. Adhesive labels and field markings

2. Nameplates and signs

B. Identification material to be a clear, 3/8-inch (10mm) Kroy tape or Brother self-laminating vinyl label with black letters. Embossed Dymo-Tape labels are not acceptable. Permanently affix identification label to cover plates, centered above the receptacle openings.

C. Provide identification on all switch and receptacle cover plates. Identification shall indicate source and circuit number serving the device (e.g. "C1A #24"). Identification for switch cover plates shall be installed on the inside cover.

3.4 BOX LABELING

A. Products:

1. Adhesive labels and field markings

B. Identify Junction, Pull and Connection Boxes: Labeling shall be 3/8-inch (10mm) Kroy tape OR Brother self-laminating vinyl label, letters/numbers In rooms that are painted out, provide labeling on inside of cover.

C. All junction, pull, and connection boxes shall be identified as follows:

1. For power and lighting circuits, indicate system voltage and identity of contained circuits ("120V, 1LA1-3,5,7").

2. For other wiring, indicate system type and description of wiring ("FIRE ALARM NAC #1").

3.5 CONDUCTOR COLOR CODING

A. Products:

1. All wire and cables shall be color coded by the manufacturer.

B. Color coding shall be applied at all panels, switches, junction boxes, pull boxes, vaults, manholes etc., where the wires and cables are visible and terminations are made. The same color coding shall be used throughout the entire electrical system, therefore maintaining proper phasing throughout the entire project.

C. Colored cable ties shall be applied in groups of three ties of specified color to each conductor at each terminal or splice point starting 3 inches (76mm) from the termination and spaced at 3- inches (76mm) centers. Tighten to a snug fit, and cut off excess length.

D. Where more than one nominal voltage system exists in a building or facility, each ungrounded conductor of a multi-wire branch circuit, where accessible, shall be identified by phase and system.

3.6 EQUIPMENT IDENTIFICATION

A. Provide identification on the front of all control equipment such as combination starters, starters, VFDs, contactors, motor control centers, etc.

B. Labeling shall include:

1. Equipment type and contract documents designation of equipment being served.

2. Location of equipment being served if it is not located within sight.

3. Voltage and phase of circuit(s).

4. Panel and circuit number(s) serving the equipment.

END OF SECTION 26 05 53

kasper architects + assoc.
10175 Fortune Parkway, Suite 701
Jacksonville, FL 32256
p 904.683.9201 f 904.683.9702
www.kasperarch.com
FL License No.: AA26000802

IMEG
formerly McVeigh & Mangum Engineering
www.IMEGCorp.com
9133 R.G. Skinner Parkway
Jacksonville, Florida 32256
Ph: (904) 483-5200 Fax: (904) 636-6700
email: mail@McVeighMangum.com
CA 6330
Eng. of Record: Thomas C. Nielsen
License No.: 53492

1 ALL DESIGN PRIOR TO 08/28/2025 WAS PERFORMED BY IMEG UNDER THE RESPONSIBLE CHARGE OF THOMAS C. NIELSEN, PE #53492.
ALL SUBSEQUENT DESIGN BY IMEG IS UNDER THE RESPONSIBLE CHARGE OF BRIAN J. LEAVITT, PE #87733.

BRIAN JOSEPH LEAVITT LICENSE No. 87733 STATE OF FLORIDA PROFESSIONAL ENGINEER
Brian Leavitt
Digitally signed by Brian Leavitt
Reason: This item has been electronically signed and sealed by Brian J. Leavitt PE using a Digital Signature and date. Printed copies of this document are not considered signed and sealed and the signature must be verified on any electronic copies
Date: 2025.08.28 14:57:34-05'00'

BUSY BEE ELLISVILLE

136 SW WEBBS GLN
LAKE CITY, FL 32024

PROJECT NO.: 22024
DATE: 06/02/2025
PRIOR ISSUES:

1	08/24/2025	ASI #1

ELECTRICAL SPECIFICATIONS

E8.1

DRAWN BY: IMEG
CHECKED BY: IMEG

100% CONSTRUCTION DOCUMENTS

© 2013

ALL REPORTS, SPECIFICATIONS, COMPUTER FILES, FIELD DATA AND OTHER DOCUMENTATION PREPARED BY KASPER ARCHITECTURE & DEVELOPMENT, INC. (KAD) AS INSTRUMENTS OF SERVICE SHALL REMAIN THE PROPERTY OF KAD. KAD SHALL RETAIN ALL COMMON LAW, STATUATORY AND OTHER RESERVED RIGHTS, INCLUDING THE COPYRIGHT THERETO. THIS DRAWING SHALL NEVER BE REPRODUCED IN WHOLE OR IN PART WITHOUT THE EXPRESS WRITTEN PERMISSION OF KAD

SECTION 26 05 73 - POWER SYSTEM STUDY

PART 1 - GENERAL

1.1 SECTION INCLUDES

A. low voltage distribution system power study.

B. Short-circuit analysis and report.

C. Selective coordination analysis and report.

1.2 QUALITY ASSURANCE

A. Analyses shall be performed by an agent authorized by the manufacturer of equipment specified in the related specification sections.

1.3 SUBMITTALS

A. Documentation shall bear the seal/signature of the licensed Professional Engineer who performed the analysis.

B. The input for the power system study shall be based on the contract documents, with estimated conductor lengths provided by the Electrical Contractor.

C. Documentation of the analyses shall be submitted in a single bound electronic (PDF or equal) format and shall accompany the shop drawing submittals for equipment provided under the related work specification sections. The submittal of these related specification sections will not be reviewed without this documentation.

D. Power system study project model shall be submitted on electronic media for review and the Owner's operating and maintenance records.

1.4 SCOPE

A. Provide a power system study of the electrical system shown on the plans. The study shall include arc-fault analysis.

PART 2 - PRODUCTS

2.1 POWER SYSTEM STUDY

A. Power systems study shall be completed in Power Tools for Windows (PTW) version,EasyPower, Paladin DesignBase, Etap or pre-approved equivalent program.

B. Power system studies including, but not limited to short-circuit analysisand arc-flash analysis are inherently iterative in nature. The initial and subsequent analysis commonly requires engineering evaluation, equipment modification, setting adjustments, and revised analysis report. The power system analysis scope shall not be considered complete until all outstanding engineering, equipment and device setting solutions have been resolved and documented by a final report. The power system study vendor shall provide inclusive bid provisions for the initial, subsequent, final analysis and associated reports.

PART 3 - EXECUTION

3.1 SHORT-CIRCUIT ANALYSIS

A. Provide a complete short-circuit analysis from the utility service to and including the entire building distribution as shown on the drawings.

B. Analysis shall include the entire distribution system from the point of connection to the utility power source to the distribution panels and branch circuit panelboards.

C. Short-circuit analysis documentation shall be made in one-line diagram form showing the magnitude and location of each calculated fault. Fault current calculations shall be made at the main bus of each switchboard, distribution panel, and branch circuit panel. A summary of the fault currents available shall also be submitted and made available to the AHJ if requested.

D. The analysis shall include primary protective device, secondary main switchboard/switchgear device(s), switchboard/switchgear branch feeder devices, distribution panel, panelboard main devices, and branch feeder devices.

END OF SECTION 26 05 73

SECTION 26 09 33 - LIGHTING CONTROL SYSTEMS

PART 1 - GENERAL

1.1 RELATED SECTIONS

A. The lighting system design includes a combination of luminaire sources, lighting control components, programming sequences, and supplementary components for building and energy code compliance. The design uses performance-based specifications for portions of the lighting system to account for the limitation of directly comparable product solutions available by competitive manufacturers. The Contractor shall reference related specification sections, plans, schedules, and details prior to submitting pricing, submittals, and installation. The Contractor shall coordinate system component compatibility among various manufacturers and suppliers for a turnkey lighting system.

1.2 SUBMITTALS

A. Submit a comprehensive package including devices, hardware, software, product specification, finishes, dimensions, installation instructions, component replacement instructions, warranty, system software requirements.

B. Provide floor plan showing location, orientation, and coverage area of each control device, sensor, and controller/interface. For areas requiring multiple sensor devices for appropriate coverage, submit specific manufacturer-approved sensor layout as an overlay directly on the project drawings, either in print or approved electronic form. Sensor coverage patterns shall have a 20% overlap.

C. Submit project specific control wiring diagrams showing all equipment, line voltage, and control wiring requirements for all components including, but not limited to, dimmers, relays, low voltage switches, occupancy sensors, control stations, dimmer panels, relay panels, and communication interfaces and programming instructions for each sequence of operation. Include network cable specification and end-of-line termination details, if required.

D. Programming Sequences: Provide a copy of the initial lighting control programming sequences in narrative and manufacturer/vendor format.

E. Lighting Control Stations: The manufacturer/vendor shall provide control station shop drawings showing arrangement of controls, dimensioned elevations, wiring diagram, and recommended backboxes. Label each applicable submittal with the applicable Sequence Of Operation SOO description. Submit data sheets on the switches, dimmers, sensors, buttons, etc. contained in the control station.

1.3 SYSTEM DESCRIPTION

A. Performance Statement: The specification section and lighting design documents describe the minimum material quality, required features, and operational performance requirements of the lighting control system. The documents do not convey every component, relay, wire, and equipment connection required. The Contractor and lighting control manufacturer/vendor are solely responsible for determining all system components, wiring, and programming required for a complete and operational system based on the performance based requirements of the documents.

B. Lighting Sequence Of Operation (SOO): The Sequence Of Operation (SOO) describes the required lighting control operation and performance in each space. The Sequence Of Operation descriptions are included on the drawings.

C. Drawings: The drawings include the Sequence Of Operation (SOO), luminaire schedule, location of control devices, sensors, and identification of control zones, and branch power circuiting. Control wiring and manufacturer/vendor specific components are NOT shown, but shall be submitted with the shop drawing submittals.

D. .

1.4 COMMISSIONING

A. Commissioning of a system or systems specified in this section is part of the construction process. Documentation and testing of these systems, as well as training of the Owner's operation and maintenance personnel, is required in cooperation with the Owner's Representative and Architect/Engineer. Project closeout is dependent on successful completion of all commissioning procedures, documentation, and issue closure. Refer to Division 1 for detailed commissioning requirements.

B. The Contractor shall provide all services necessary for compliance with the IECC Section C408 Commissioning. The commissioning shall include, but not be limited to, a commissioning plan, preliminary commissioning report, construction documents, manuals, final commissioning report, and lighting system functional testing.

C. This project will have selected building systems commissioned. The Contractor is responsible to execute commissioning. The commissioning process, equipment, and systems to be commissioned are defined in Division 1.

D. The system shall be functionally tested by a factory-authorized engineer and comply with the Sequence of Operation prior to system commissioning. All loads shall be tested live for continuity and freedom from defects, and all control wiring shall be tested for continuity and connections prior to energizing the system.

1.5 WARRANTY

A. Manufacturer shall warrant products under normal use and service to be free from defects in materials and workmanship for a period of two (2) years from date of commissioning.

B. Occupancy, vacancy, daylight sensors and controls shall have a five (5) year warranty from date of Substantial Completion.

PART 2 - PRODUCTS

2.1 LIGHTING CONTROL OVERVIEW

A. Lighting Control System: As defined in the System Description, the design documents describe the operational performance requirements of the lighting control system. The Lighting Control System has been categorized into the following groups. Refer to the Electrical Symbol Key, this specification section, and the drawings to determine the appropriate lighting control category when more than one is applicable to the project:

1. Standalone Lighting Control Devices: Independent (standalone) devices traditionally operating at line or low voltage, field configurable with other standalone devices to provide an overall lighting control system.

2. Room-Based Lighting Controls: Integrated system comprised of switch stations, sensors, room controllers, control panels, and accessories, operating at line and/or low voltage, configured as an integrated overall 'intelligent' lighting control system. Lighting control zones and power circuits commonly align.

B. All system components and materials of similar function (e.g., switches, dimmers, sensors, contactors, relays, etc.) shall be of the same manufacturer, unless specifically stated otherwise on drawings or elsewhere in the specifications. Lighting control switches, systems, and components shall be listed.

2.2 DEVICE COLOR AND COVERPLATES

A. All switches and lighting controls shall be complete with coverplates that match material and color of the wiring device coverplates in the space. When the coverplate is proprietary to the device/manufacturer and do not match the wiring device coverplates, the architect shall select the coverplate color and materials from the standard coverplate options.

2.3 STANDALONE LINE AND LOW VOLTAGE LIGHTING CONTROLS

A. Overview:

1. Wall Switches and Wall Dimmers:

a. Dimmer compatibility and wiring with the load being controlled shall be verified by Contractor prior to purchase and installation.

B. SW-1P; Single Pole Switch:

1. Single throw, 120/277-volt, 20-amp maintained contact. Toggle handle, side and back wired.

2. Manufacturers:

a. Hubbell HBL1221

b. Leviton 1221-2

c. Pass & Seymour PS20AC1

d. Cooper AH1221

3. Single throw, 120/277-volt, 20-amp maintained contact. Rocker handle, side and back wired.

4. Manufacturers:

a. Hubbell DS120

b. Leviton 5621

c. Pass & Seymour 2621

d. Cooper 7601

C. SW-3W; Three-way Switch:

1. Single throw, 120/277 volt, 20 amp. Toggle handle, side and back wired.

2. Manufacturers:

a. Hubbell 1223

b. Leviton 1223-2

c. Pass & Seymour PS20AC3

d. Cooper AH1223

3. Single throw, 120/277-volt, 20-amp maintained contact. Rocker handle, side and back wired.

4. Manufacturers:

a. Hubbell DS320

b. Leviton 5623

c. Pass & Seymour 2623

d. Cooper 7623

D. SW-D; Dimmer (Standalone):

1. Contractor / vendor to provide dimmer based on rating required, compatible with wiring, lighting load being controlled. Verify compatibility with luminaire prior to light control prior to purchase and installation.

E. SW-DO; Dimmer - Vacancy Sensor Dual Technology (Standalone):

1. Contractor / vendor to provide dimmer based on rating required, compatible with wiring, lighting load being controlled. Verify compatibility with luminaire shop drawings prior to light control prior to purchase and installation.

2. Vacancy Dimmer with manual on/auto/off, dual technology ultrasonic/acoustic and PIR120/277 volt, automatic on/off, 0-10 V control. 120/277 V - 700 watt electronic ballast rated. Mounted in dedicated backbox.

a. Ratings/Manufacturers: Compatible with Luminaire Driver

1) Lutron Maestro Series

2) Acuity nLight Series

3) Hubbell LightHawk Series

4) Sensor Switch WSX D Series

b. .

F. SW-VC-#;Vacancy Sensors (Standalone):

1. Combination Devices: Subscripts identify combination type devices when applicable. The contractor shall provide the combination device or provide multiple device(s) to meet the functionality when the manufacturer does not offer the required functionality with a single device. Manufacturer verified layouts shall include a 20% overlap of coverage patterns.

2. Subscripts: Subscripts are used to define the device type.

a. Blank (or D) = Dual Technology

3. General Description: Wall- or ceiling-mounting, solid-state units with a separate power supply/relay unit.

a. Operation - Occupancy: Occupancy sensors turn lights 'on' when covered area is occupied and turn lights 'off' with a time delay when unoccupied, unless otherwise indicated.

b. Operation - Vacancy: Vacancy sensors require a manual switch operation to turn lights 'on' with a time delay when occupied to turn lights 'off'.

c. Time Delay 'Off': Field adjustable with a minimum range of 1-20 minutes.

d. Sensor Output: Contacts rated to operate the connected relay, complying with UL 773A. Sensor shall be powered from the relay unit.

e. Relay Unit: Dry contacts rated for 20 A ballast load at 120 and 277 VAC, for 13-amp tungsten at 120 VAC, and for 1 hp at 120 VAC. Power supply to sensor shall be 24 V dc, 150-mA, Class 2 power source as defined by Electrical Code.

f. Mounting:

1) Sensor: Suitable for mounting in any position on a standard outlet box.

2) Relay: Externally mounted through a 1/2-inch knockout in a standard electrical enclosure. Mount relay above accessible ceiling near entry door to room or area.

3) Time Delay and Sensitivity Adjustments: Recessed and concealed.

4. Indicator: LED to show when motion is being detected during testing and normal operation of the sensor.

5. Bypass Switch: Override the on function in case of sensor failure.

6. Power Supply and Child Packs: Provide as required for sensor quantity and switching scheme. Mount to standard 1/2" knockout on electrical box above accessible ceiling near entry door to room or area. Sensor power shall be from emergency circuit if emergency lighting is in the area.

7. Detection Coverage (Room): Detect occupancy anywhere in an area based on hand motion.

8. Detection Coverage (Corridor): Detect occupancy based on a half-step motion.

a. (A); Ultrasonic Two-Sided Corridor Coverage Occupancy/Vacancy Sensor: Frequency greater than 32 KHz solid state, adjustable sensitivity and time delay, temperature and humidity resistant receivers. Sensor shall control all circuits in area, unless noted otherwise.

1) Manufacturers:

a) Watt Stopper WT-2250 Series

b) Hubbell OMNI-US or ATU Series

c) Greengate ODC-U Series

b. Blank (or D); Dual Technology 360 Degree Coverage Occupancy/Vacancy Sensor: Combination of PIR and ultrasonic detection methods in area of coverage. Particular technology or combination of technologies that controls on and off functions shall be selectable in the field by operating controls on unit. Frequency greater than 40 KHz. Dual sensing verifications (requires both technologies to activate), either technology maintains on status. Integrated ambient light level sensor (2 to 200 FC range), adjustable sensitivity and time delay. Sensor shall control all circuits in area, unless noted otherwise.

1) Manufacturers:

a) Watt Stopper DT 300/200 Series

b) Hubbell OMNI-DT2000 / LODTRP / ATD2000C Series

c) Greengate OAC-DT Series

d) Leviton OSC-MOW / OSM12 Series

e) Sensor Switch CM PDT 10 / WvpDT 16 series (acoustic)

2.4 ROOM-BASED LIGHTING CONTROL SYSTEM ('INTELLIGENT CONTROLS)

A. Manufacturers: Manufacturers as listed below meet the qualifications as outlined in this specification. Contractor is responsible for verifying that selected manufacturer is capable of furnishing the complete system as specified herein.

1. Acuity Controls nLight Series

2. Eaton Greengate RC3 Series (room-based system)

3. Hubbell Automation NX Series

4. Legrand Watt Stopper DLM Series

5. Lutron

6. Osram Encelium Series

B. Room-Based Lighting Control System Description: The room-based lighting control system is a distributed network of devices, components, and accessories for lighting controls and integrated control with other systems. The system includes system room controllers (network hubs), control stations, sensors (occupancy, vacancy, daylighting, etc.), switching/dimming modules, programming, 365/7 day scheduling, and associated wiring.

C. The lighting control system manufacturer shall be responsible to assure coordination and network compatibility between all system devices, components, and accessories.

D. Global System Typography: The system shall be provided with the following global system characteristics. When multiple exclusive options are listed the manufacturer/vendor may submit a system based on either criterion unless otherwise noted. When the drawings identify a specific option (typically identified with a subscript) provide the specific option as scheduled on the drawings. (Example, a control station (SW-#B) shown with a "W" subscript on the plans shall be provided in a wireless configuration regardless if the following specification descriptions allow both low voltage or wireless network.).

1. System Controllers (Room Controllers): Room-based controllers located above accessible ceilings.

2. Power Source for System Devices, Components, and Accessories: AC power pack supply.

E. Lighting Control System Programming Protocol: Manufacturer's protocol.

F. Lighting Control System (Room-Based Controller):

1. Lighting Control System Room-Based Controller: Provide with data network to all lighting control system components, devices, and accessories. Provide network interface with other systems via BACnet IP communication or alternative protocol acceptable to the other system. System communication protocol shall be compatible with the building automation system.

G. Time Clock and Scheduling: Provide 24 astronomical hour-based scheduling for interior lighting controls.

H. Room-Based System Controllers (Room Controllers): Distributed room-based controller, integral switching relays and dimmers.

1. Installation: Provide a dedicated controller for each space; not shared with adjacent rooms. Locate the controller near the associated wall controller, near the entry door when applicable, and above the finished accessible ceiling. As an alternative, the controller may be mounted above the finished accessible ceiling of the adjacent space when the associated ceiling space is not accessible. Example, located in adjacent corridor.

I. Programming and Commissioning Dongle (Removable Style): Provide and permanently install a programming dongle for each room controller when a field removable dongle type device is required for programming and commissioning of the system. The programming dongle shall be permanently installed to allow for ease of programming the controller without above ceiling access.

J. Control Devices: All occupancy, vacancy sensors (ultrasonic, PIR, dual technology, daylighting, photocell, timers), control stations, and other system components shall be provided with the system and designed to operate on system network. Sensors shall be powered from power supplies, modules, packs, or Power Over Ethernet POE.

K. Power Supplies (Modules, Packs, etc.): Provide power supplies for control devices. Power supply shall provide physical separation of 120/277 volt line voltage wiring and low voltage control wiring. Provide supplementary power supplies when required for multiple control devices. Provide switch or dimmed control as required by the Sequence Of Operation SOO.

1. Installation: Install adjacent to wall room controller when applicable, near the entry door when applicable, and above the finished accessible ceiling. As an alternative, the controller may be mounted above the finished accessible ceiling of the adjacent space when the associated ceiling space is not accessible. Provide low voltage wiring to applicable control devices and control stations.

L. Device Relays: Mechanically held unless otherwise indicated; split-coil, momentary-pulsed type, rated 20 A, 125-volt AC for tungsten filaments and 20 A, 277-volt AC for electronic ballasts, minimum 50,000 cycles at rated capacity.

1. Receptacle Outlet Control: Provide auxiliary relay to control receptacle outlets located in the control space. Refer to the drawings and sequence of operation schedule for requirements.

2. Building Automation Interface: Provide auxiliary relay to report occupancy status of each individual space to the building automation system. Refer to the drawings and sequence of operation schedule for requirements.

M. SW-LCPR-#; Room-Based Lighting Control Panel (LCPR-#):

1. Room-Based type controllers are the preferred basis-of-design. Centralized wall or floor mounted panels may be required pending manufacturer specific product offerings. Panel is shown on floor plans for possible physical space planning purposes. Contractor shall coordinate final mounting location with available space and approved shop drawings. Refer to approved shop drawings for additional information.

2. Control Panel Configuration: Group mounted individual control zones (relay switch, dimmer, other), non-overcurrent protection type, with lighting control network-based communication. Overcurrent protection of circuits provided by scheduled panels and circuits shown on drawings. Panels configurations with branch overcurrent protection, main circuit breaker, main bus, and a single feeder-based power source are not acceptable in the base bid unless otherwise noted. The contractor may submit a voluntary alternate for a single feeder-based power source type lighting control panel with bid for consideration. The voluntary alternate must include provisions for the required feeder and associated post bid design modifications.

3. Dimmer / Relay capacity: Refer to plans for quantity required. The minimum quantity shall be24.

4. Dimmer / Relay Modules: Match load types and sequence of operation descriptions.

5. Cabinet: Steel with hinged, locking door. Barriers separate low-voltage and line-voltage components.

N. SW-#B; Lighting Control Station, Default Dimming Control Raise/Lower/Fade: The lighting control station shall comply with the performance requirements of the lighting sequence of operation. The control station may consist of switches, pushbuttons, sliders, dimming functions, etc. Provide a common coverplate for lighting control stations.

1. #B: The '#' indicates the minimum quantity of unique lighting control scenes when shown plus raise/lower and lights 'off' scene. Refer to the Lighting Sequence Of Operation (SOO) for the minimum quantity of scenes required (when a number is not designated) and a description of each control scene.

2. Subscripts:

a. (BLANK) = Dimming Control (Default)

b. S = Switch Control

c. W = Wireless w/ battery

d. # = Unique ID when applicable

3. Manufacturer: Room-Based Lighting Controller Manufacturer:

a. Dimming (Blank) or Switch (S) Control Station: Modular, momentary pushbutton, with addressable capabilities to control the scene or luminaires assigned to the switch. The switch shall be able to actuate the functions based on the described sequence of operation and intended functions.

1) Preset/fader stations shall operate using programmable buttons and/or faders as indicated on drawings.

2) Raise, Lower, Integral Fader Control: Provide control station with manual raise and lower fader control for each control zone of lighting control. Manual raise/lower shall be separate buttons from scene control; hold and dim scene control buttons not acceptable. Faders may be physical sliders or up/down buttons. Fader range shall provide continuous even dimming matching full range of dimmer specification.

3) Integral Pilot Light or LED: Indicate that controls are active or powered by being on continuously when powered or when pushbuttons are actuated.

4) Labeling of buttons and faders shall be engraved/screened by manufacturer, using approved text returned with shop drawing submittals.

5) Station control components shall be designed to operate standard default or custom system functions. Components shall operate default functions unless re-assigned via direct or network connection. Function options include: preset selection, manual mode, record mode, station lockout, raise/lower, macro, cue, and room join/separate.

6) Multiple stations (shown in same space): When multiple control stations are shown in the same space the sequence of operation shall be the same at all locations unless noted otherwise.

7) Multiple stations (movable partitions in same space): When multiple control stations are shown in the same space with movable partitions the sequence of operations shall be the same at all locations unless noted otherwise. A wall partition switch shall monitor the status of the movable partitions and automatically associated the control station(s) with the appropriate space based on the status of the wall partition.

PART 3 - EXECUTION

3.1 INSTALLATION

A. Install in accordance with manufacturer's instructions and approved shop drawings.

B. All wiring shall be installed in conduit

C. Low Voltage Cabling (less than 100 volts): Low voltage lighting control cabling shall be plenum listed. Low voltage cables in non-accessible areas shall be installed in conduit. Low voltage lighting control cable may be installed without conduit in accessible areas using the following types of cable supports. Cable support types/systems shall comply with the warranty requirements of the low voltage cable manufacturer.

1. J-hooks; batwing type.

2. Bridle rings with saddle supports.

3. Low voltage cable batwings supported by independent luminaire support systems (luminaire support cabling); use of batwings on ceiling support systems not allowed.

4. Listed cable ties. Low voltage cabling secured to exterior of luminaire power raceway.

3.2 Integration with other systems

A. The Room-Based lighting control system interacts, is controlled by, or controls the following other systems per the design documents and lighting sequence of operations descriptions. The contractor shall provide the necessary communication gateways, relays, cabling, and programming to interact with the following systems.

1. Building Automation System

3.3 Branch circuit power wiring for controllers

1. Branch circuit power for the following lighting control system components shall be provided from the following branches. Lighting control power shall originate from the same branch circuits serving the controlled luminaires:

a. Lighting Control System (Physical Server, Central Station, or Cloud-based Access): Emergency (Electrical Code Article 700).

b. Room controllers, lighting control power supplies, devices, components, and accessories when an associated (ALCR) device is applicable to the lighting control sequence of operation: Emergency (Electrical Code Article 700).

c. Room controllers, lighting control power supplies, devices, components, and accessories when an associated (BCELTS) device is applicable to the lighting control sequence of operation: The load side of the BCELTS device normal and emergency/life safety pending the status of the BCELTS.

d. The contractor shall coordinate the branch circuit power source required with the Engineer when required for unique lighting control system devices, components, and accessories.

3.4 Low voltage lighting Control Cabling

A. Control Cable Raceway Routing: All wiring shall be installed in conduit.

B. Control Cabling Installed with Line Voltage Wiring: When low voltage control cabling is installed with line-voltage wiring, the control wiring shall be, copper conductors, minimum 16 AWG or per manufacturer, with cable insulation equal to the line-voltage rating (voltage, temp rating, etc.) and comply with Specification Section 26 05 13 "Wire and Cable."

C. Splices and Taps: Tapping or wire trap connectors shall be used to splice all Class 1 and Class 2 control wiring. Twist-on, wire-nut type connectors are not allowed.

3.5 Automatic Load Control Relays (ALCR20, ALCR3) and Branch circuit emergency lighting transfer switch (bcelts)

A. Field install per manufacturer requirements.

B. Remote Test Switch: Provide connection to remote test switch.

C. Fire Alarm Override: Provide connection to addressable fire alarm relay.

3.6 SUPPORT SERVICES

A. System Startup:

1. Manufacturer shall provide factory authorized technician to confirm proper installation and operation of all system components.

B. Testing:

1. System shall be completely functional tested by a factory-authorized technician. All loads shall be tested live for continuity and freedom from defects, and all control wiring shall be tested for continuity and connections prior to energizing the system components.

C. Training:

1. Manufacturer shall provide competent factory-authorized technician to train Owner personnel in the operation, maintenance and programming of the lighting control system. Submit training plan with notification seven (7) days prior to proposed training dates.

END OF SECTION 26 09 33

SECTION 26 22 00 - DRY TYPE TRANSFORMERS

PART 1 - GENERAL

1.1 SUBMITTALS

A. Submit product data under provisions of Section 26 05 00.

B. Include outline and support point dimensions of enclosures and accessories, unit weight, voltage, KVA, and impedance ratings and characteristics, loss data, efficiency at 35, 50, 75 and 100 percent rated load, sound level, tap configurations, insulation system type, and rated temperature rise.

PART 2 - PRODUCTS

2.1 DRY TYPE TWO WINDING TRANSFORMERS

A. Acceptable Manufacturers:

1. Square D 7400 EX##T / SK300##KB Series

2. Eaton V48M / H48M / B48M Series

3. ABB 9T Series

4. Hammond SG / SMK Series

5. Siemens 3F3 Series

B. Dry Type Transformers: NEMA ST 20, factory-assembled, air-cooled dry type transformers; ratings as shown on the drawings. Transformers supplied under this project shall meet the US Department of Energy (DOE) 2016 Efficiency requirements or the most current DOE CFR in effect.

C. Case temperature shall not exceed 40°C rise above ambient at its warmest point.

D. Winding Taps, Transformers Less than 15 KVA: Two 5 percent below rated voltage, full capacity taps on primary winding.

E. Winding Taps, Transformers 15 KVA and Larger: Two (2) 2-1/2% below and two (2) 2-1/2% above rated voltage, full capacity taps on primary winding.

F. Ground core and coil assembly to enclosure by means of a visible flexible copper grounding strap.

G. Mounting: Transformers 75 KVA and less shall be suitable for wall, floor, or trapeze mounting; transformers larger than 75 KVA shall be suitable for floor or trapeze mounting.

H. Coil Conductors: Continuous windings with terminations brazed or welded.

I. Enclosure: NEMA ST 20; Type 1. Provide lifting eyes or brackets.

J. Isolate core and coil from enclosure using vibratio-absorbing mounts.

K. Nameplate: NEMA TP 3; Include transformer connection data and overload capacity based on rated allowable temperature rise.

PART 3 - EXECUTION

3.1 INSTALLATION

A. Mount transformers on four 3"x3"x1/2" thick, 50 durometer rubber vibration isolating pads suitable for isolating the transformer noise from the building structure.

B. Ventilated transformers: Provide factory label on horizontal surface to prohibit storage on top, front, or adjacent to transformer.

END OF SECTION 26 22 00

SECTION 26 24 16 - PANELBOARDS

PART 1 - GENERAL

1.1 SUBMITTALS

A. Submit shop drawings for equipment and component devices under provisions of Section 26 05 00.

B. Include outline and support point dimensions, voltage, main bus ampacity, integrated short circuit ampere rating, circuit breaker and fusible switch arrangement and sizes.

PART 2 - PRODUCTS

2.1 RATINGS

A. The panelboards for this project shall be fully rated unless otherwise specifically noted in the Drawings or Specifications.

2.2 BRANCH CIRCUIT PANELBOARDS

A. General

1. Manufacturers:

a. Square D NQ, NF

b. ABB ReliaGear Series

c. Siemens P1

d. Eaton PRL1, PRL2

B. Lighting and Appliance Branch Circuit Panelboards: NEMA PB 1; circuit breaker type.

C. Enclosure: NEMA PB 1; Type 1.

D. Provide cabinet front with door-in-door construction, concealed hinge, and flush lock all keyed alike. Door hardware shall provide swing clear operation (180-degree swing). Finish in manufacturer's standard gray enamel.

E. Provide panelboards withcopper bus, ratings as scheduled on the drawings. Provide copper ground bus in all panelboards.

F. All unlabeled circuits shown on the panelboard schedule shall be fully prepared spaces for future breakers.

G. Provide handle lock-on devices for all breakers serving exit sign and lighting circuits with emergency battery units. Provide handle lock-on devices and red handles for breakers serving fire alarm panels.

H. Molded Case Circuit Breakers: Bolt-on type thermal magnetic trip circuit breakers, with common trip handle for all poles. Provide circuit breakers UL listed as Type SWD for lighting circuits. Provide UL Class A ground fault interrupter circuit breakers where scheduled on the drawings. Do not use tandem circuit breakers.

I. Suitable for use as service entrance equipment. Provide line side (service style) barriers.

PART 3 - EXECUTION

3.1 INSTALLATION

A. Stub five (5) empty one-inch conduits to accessible location above ceiling out of each recessed panelboard and panelboards installed in electrical closets less than 36" deep.

END OF SECTION 26 24 16

SECTION 26 27 26 - WIRING DEVICES

PART 1 - GENERAL

1.1 SECTION INCLUDES

A. Device plates and box covers

B. Receptacles

1.2 SUBMITTALS

A. Submit product data under provisions of Section 26 05 00.

B. Provide product data showing configurations, finishes, dimensions, and manufacturer's instructions.

1.3 COORDINATION

A. Receptacles for Owner Furnished Equipment: Match plug configurations.

B. Cord and Plug Sets: Match equipment requirements.

C. Coordinate installation of receptacle assemblies in[countertops][and furniture] with the Contractor providing the[countertop][or furniture]. Contractor shall coordinate penetrations and conduit routing in[countertops][and furniture] with drawings and other obstacles below the installation surface.

PART 2 - PRODUCTS

2.1 DEVICE COLOR

A. All switch, receptacle, and outlet colors shall beverified with Architect, unless indicated otherwise.

2.2 COVERPLATES

A. All switches, receptacles, and outlets shall be complete with the following:

1. #302 stainless steelcoverplates.

2. Galvanized steel coverplates in unfinished spaces for surface mounted boxes.

B. Where several devices are ganged together, the coverplate shall be of the ganged style for the number of devices used.

C. Install nameplate identification as indicated in Section 26 05 53.

D. Plate securing screws shall be metal with head color matching the wall plate finish.

2.3 RECEPTACLES

A. Refer to Electrical Symbols List for device type.

B. Devices that are shaded on the drawings shall be red.

C. Devices that are shaded on the drawings shall be red and shall have an illuminated face or indicator light to indicate that there is power to the device.

D. REC-DUP: NEMA 5-20R Duplex Receptacle:

1. Spec Grade: 125-volt, 20 amp, 3-wire grounding type with impact resistant thermoplastic face and brass back strap.

a. Manufacturers:

1) Hubbell 5352

2) Leviton 5362-S

3) Pass & Seymour 5362

4) Cooper 5362

E. REC-DUP-GFI: NEMA 5-20R Ground Fault Duplex Receptacle:

1. Standard Grade: 125-volt, 20 amp, 3-wire grounding type with test and reset buttons in impact resistant thermoplastic face, listed.

a. Device shall perform self-test of GFCI circuitry in accordance with UL 943.

b. Manufacturers:

1) Hubbell GF20L

2) Leviton GFNT2

3) Pass & Seymour 2097

4) Cooper SGF20

F. REC-DUP-GFI-R: Remote Ground Fault Device:

1. Ground fault device for remote downstream receptacles. 125-volt, 20 amp. Test and reset buttons in impact resistance thermoplastic face, listed.

a. Manufacturers:

1) Hubbell GFBF20

2) Leviton 6895

3) Pass & Seymour 2085

4) Cooper VGFD20

G. REC-DUP-WP: NEMA 5-20R Weatherproof Ground Fault Duplex Receptacle:

1. 125-volt, 20 amp, 3-wire grounding type with test and reset buttons in impact resistant thermoplastic face, weather resistant WR listed. Provide extra-duty NEMA 3R rated while-in-use cast aluminum outlet box hood.

2. Device shall perform self-test of GFCI circuitry in accordance with UL 943.

a. Manufacturers:

1) Hubbell:

a) GFTWRST20 withaluminum housing WP826

2) Leviton GFWT2 withaluminum housing M5979

3) Pass & Seymour 2097TRWR withaluminum housing WIUCAST1

4) Cooper WRSGF20 withaluminum housing WIUMV-1

H. REC-USB: NEMA 5-20R Receptacle with USB Charger:

1. Standard Grade Type A USB: 125-volt, 20-amp, tamper resistant, 3-wire grounding type with impact resistant thermoplastic face. Type A USB charging rated at 5VDC 3.0A minimum. Mounted in double gang backbox.

a. Manufacturers:

1) Hubbell USB20X2

2) Pass & Seymour TR5362USB

3) Cooper TR7766

2. Standard Grade Type C USB: 125-volt, 20-amp, tamper resistant, 3-wire grounding type with impact resistant thermoplastic face.

a. One Type A USB charging rated at 5VDC 3.0A minimum and one Type C USB charging rated at 5VDC 5.0A. Mounted in double gang backbox.

b. Two Type C USB charging rated at 5VDC 5.0A. Mounted in double gang backbox.

c. Manufacturers:

1) Hubbell USB USB20C5

I. REC-TAMP: NEMA 5-20R Tamper Resistant Duplex Receptacle:

1. Standard Grade: 125-volt, 20 amp, 3-wire grounding type with impact resistant thermoplastic face.

a. Manufacturers:

1) Hubbell BR20TR

2) Leviton TBR20

3) Pass & Seymour TR5362

4) Cooper TRBR20

J. REC-TAMP-GFI: NEMA 5-20R GFI Tamper Resistant Receptacle:

1. Standard Grade: 125-volt, 20 amp, 3-wire grounding type tamper-resistant with test and reset buttons in impact resistant thermoplastic face, listed.

a. Device shall perform self-test of GFCI circuitry in accordance with UL 943.

b. Manufacturers:

1) Hubbell GFTR20

2) Cooper TRSGF20

3) Pass & Seymour 2097TR

4) Leviton GFTR2

K. REC-TAMP-QUAD: NEMA 5-20R Double Duplex Tamper Resistant Receptacle:

1. Consists of two duplex tamper resistant receptacles, double gang box, plaster ring and faceplate.

a. Manufacturers:

1) Refer to Tamper Resistant Receptacle above.

L. REC-QUAD: NEMA 5-20R Double Duplex Receptacle:

1. Consists of two duplex receptacles, double gang box, plaster ring and faceplate.

a. Manufacturers:

1) Refer to Duplex Receptacle above.

M. REC-QUAD-GFI: NEMA 5-20R Double Duplex GFI Receptacle:

1. Consists of two duplex GFI receptacles, double gang box, plaster ring and faceplate.

a. Manufacturers:

1) Refer to Duplex GFI Receptacle above.

N. Back wired devices shall be complete with eight holes that are screw activated with metal clamps for connection to #12 or #10 copper conductors.

O. Side wired devices shall have four binding screws that are undercut for positive wire retention.

P. Ground fault circuit interrupter (GFCI) receptacles shall be listed and comply with UL 943 requiring increased surge immunity, improved corrosion resistance, improved resistance to false tripping and diagnostic indication for miswiring if the line and load conductors are reversed during installation.

PART 3 - EXECUTION

3.1 INSTALLATION

A. Install convenience receptacles at elevations indicated in the General Installation Notes on the contract drawings.

B. Install specific-use receptacles at heights shown on the contract drawings. Install devices level, plumb, and square with building lines. Coordinate installation of adjacent devices of separate systems with common mounting heights, including lighting, power, systems, technology, and temperature control device rough-ins.

C. Ground Fault Protection: Provide ground fault protection for all branch circuit breakers serving 120/208 receptacles and electrical outlets rated 50 amps or less single-phase and 100 amps or less three-phase in the following locations, as shown on drawings, or required by adopted code:

1. Bathrooms, locker rooms, shower rooms

2. Kitchens' all 120-volt through 250-volt receptacles

3. Buffet, serving, food preparation areas; all 120-volt through 250-volt receptacles

4. Rooftops

5. Interior/Exterior locations subject to damp/wet conditions

6. When located within 6 feet of sinks, bathtubs, and shower stalls

7. Plug-and-cord receptacles when the utilization appliance is located within 6 feet of a sink edge.

8. Specific Appliances: Auto vacuum machines, water drink/bottle fill coolers, pressure staying machines, tire inflation machines, vending machines, sump pumps, dishwashers, electric ranges, ovens, clothes dryers, microwave ovens

9. Future Provisions: Provide a conduit raceway and backbox for the future addition of countertop pop-receptacle when receptacles are not installed in kitchen islands and peninsulas.

D. Tamper Resistant Protection: Provide tamper resistant protection for all 15 / 20-amp 120/208 straight blade wiring devices in the following locations, as shown on the drawings, or required by adopted code.

1. Public Buildings: Corridors, waiting rooms, common areas

E. Install receptacles vertically with ground slot up or where indicated on the drawings, horizontally with ground slot to the left.

F. Floor Box Installation:

1. Set boxes level and flush with finish flooring material.

2. Use cast iron floor boxes for installations in slab on grade. Trim shall match floor covering to be used.

3. Provide a minimum horizontal offset of 24 inches between boxes.

4. Provide saw-cutting and patching of existing concrete floors as necessary for floor box installations within existing floors.

END OF SECTION 26 27 26

kasper architects + assoc.

10175 Fortune Parkway, Suite 701
Jacksonville, FL 32256
p 904.683.9201 f 904.683.9702

www.kasperarch.com
FL License No.: AA26000802

IMEG
formerly McVeigh & Mangum Engineering
www.IMEGCorp.com
9133 R.G. Skinner Parkway
Jacksonville, Florida 32256
Ph: (904) 483-5200 Fax: (904) 636-6700
email: mail@McVeighMangum.com
CA 6330
Eng. of Record: Thomas C. Nielsen
License No.: 53492

1

ALL DESIGN PRIOR TO 08/28/2025 WAS PERFORMED BY IMEG UNDER THE RESPONSIBLE CHARGE OF THOMAS C. NIELSEN, PE #53492.
ALL SUBSEQUENT DESIGN BY IMEG IS UNDER THE RESPONSIBLE CHARGE OF BRIAN J. LEAVITT, PE #87733.

BRIAN JOSEPH LEAVITT
LICENSE
No. 87733
STATE OF FLORIDA
PROFESSIONAL ENGINEER

Brian Leavitt

Digitally signed by Brian Leavitt
Reason: This item has been electronically signed and sealed by Brian J. Leavitt PE using a Digital Signature and date. Printed copies of this document are not considered signed and sealed and the signature must be verified on any electronic copies
Date: 2025.08.28 14:57:54-05'00'

BUSY BEE
ELLISVILLE

136 SW WEBBS GLN
LAKE CITY, FL 32024

PROJECT NO.: 22024

DATE: 06/02/2025

PRIOR ISSUES:

1	08/24/2025	ASI #1

ELECTRICAL SPECIFICATIONS

E8.2

DRAWN BY: IMEG

CHECKED BY: IMEG

100% CONSTRUCTION DOCUMENTS

© 2013

ALL REPORTS, SPECIFICATIONS, COMPUTER FILES, FIELD DATA AND OTHER DOCUMENTATION PREPARED BY KASPER ARCHITECTURE & DEVELOPMENT, INC. (KAD) AS INSTRUMENTS OF SERVICE SHALL REMAIN THE PROPERTY OF KAD. KAD SHALL RETAIN ALL COMMON LAW, STATUTORY AND OTHER RESERVED RIGHTS, INCLUDING THE COPYRIGHT THERETO. THIS DRAWING SHALL NEVER BE REPRODUCED IN WHOLE OR IN PART WITHOUT THE EXPRESS WRITTEN PERMISSION OF KAD

SECTION 26 28 13 - FUSES

PART 1 - GENERAL

PART 2 - PRODUCTS

2.1 MANUFACTURERS - FUSES

A. Bussman, Division of Eaton, Edison Fuse - Division of Cooper Industries, Mersen, Littelfuse Inc.

2.2 FUSES

A. Dimensions and Performance: NEMA FU 1, Class as specified or indicated.

B. Voltage: Provide fuses with voltage rating suitable for circuit phas-to-phase voltage.

C. Fuses with ratings larger than 600 amperes: Class L (time delay), unless otherwise noted on the drawings.

D. Fuses with ratings larger than 200 amperes but equal to or less than 600 amperes: Class RK-1 (time delay), unless otherwise noted on the drawings.

E. Fuses with ratings less than or equal to 200 amperes (not including control transformer fuses): Class RK-5, unless otherwise noted on the drawings.

F. Control transformer fuses: Class CC (time delay).

G. Fuses for packaged equipment: Size and type as recommended by equipment manufacturer.

END OF SECTION 26 28 13

SECTION 26 28 16 - DISCONNECT SWITCHES

PART 1 - GENERAL

1.1 SUBMITTALS

A. Submit product data under provisions of Section 26 05 00.

B. Product Data: For each type of enclosed switch, circuit breakers, accessory and component indicated, include dimensions, weights, and manufacturer's technical data on features, performance, and ratings.

C. For each type of enclosed switch, enclosure types, current and voltage ratings, short-circuit current ratings, UL listing for series rating of installed devices, features, characteristics, ratings, and factory settings of individual overcurrent protective devices and auxiliary components.

PART 2 - PRODUCTS

2.1 FUSIBLE AND NON-FUSIBLE SWITCHES

A. Acceptable Manufacturers:

1. Square D 3110 Series

2. Eaton DH Series

3. ABB TH Series

4. Siemens HNF / HF Series

B. FDS; Fusible Switch Assemblies: NEMA KS 1; Type heavy duty, quick-make, quick-break, load interrupter enclosed knife switch with externally operable handle interlocked to prevent opening front cover with switch in ON position without a tool. Handle lockable in OFF position. Fuse Clips: Class 'R' fuse clips only, unless indicated otherwise on the drawings.

C. DS; Non-fusible Switch Assemblies: NEMA KS 1; Type heavy duty, quick-make, quick-break, load interrupter enclosed knife switch with externally operable handle interlocked to prevent opening front cover with switch in ON position without a tool. Handle lockable in OFF position.

D. Enclosures: Type as indicated on the disconnect schedule.

E. Accessories: Provide the following accessories. Refer to Disconnect Schedule for additional requirements for each application.

1. Lockable

2. Provide finger safe barriers for exposed line-side terminations and energized components when the switch is in the open position.

2.2 MOLDED CASE CIRCUIT BREAKERS AND SWITCHES

A. Acceptable Manufacturers:

1. Square D

2. Eaton

3. ABB

4. Siemens

B. Accessories: Provide the following accessories. Refer to Disconnect Schedule for additional requirements for each application.

1. Lockable

2. Provide finger safe barriers for exposed line-side terminations and energized components when the switch is in the open position.

2.3 MOTOR DISCONNECT SWITCH

A. Acceptable Manufacturers:

1. Square D 3110 Series

2. Eaton r5 Series

3. ABB ML Series

4. Siemens LBR Series

B. MD; Rotary Switch Assemblies: Rated for making and breaking loads, rotary type enclosed switch with externally operable handle interlocked to prevent opening front cover with switch in ON position without a tool. Handle lockable in OFF position.

C. Enclosures: Type as indicated on the Disconnect Schedule.

D. Ground lug connection provided in enclosure.

E. Accessories: Provide the following accessories. Refer to Disconnect Schedule for additional requirements for each application.

1. Lockable

2. Provide finger safe barriers for exposed line-side terminations and energized components when the switch is in the open position.

F. Listed UL 508 suitable for motor control.

PART 3 - EXECUTION

END OF SECTION 26 28 16

SECTION 26 43 00 - SURGE PROTECTION DEVICES

PART 1 - GENERAL

1.1 SUBMITTALS

A. Shop Drawings: Should include device dimensions, mounting requirements including wire size and over-current protection device rating, nameplate nomenclature, electrical ratings, short circuit current rating, and test results as indicated below under "Testing, Warranty and Life Expectancy" as provided by an independent test lab or a UL certified test lab for the category(ies) of suppression device(s) specified using the appropriate IEEE test wave. Product data sheets with installation instructions for each size and type of device are required. Shop drawings submitted without the testing data as required by section this section will be rejected.

1.2 TESTING, WARRANTY AND LIFE EXPECTANCY

A. Manufacturer must provide independent testing on repetitive capability and maximum surge current rating of service entrance suppressor units. This shall be performed at a nationally recognized lab not affiliated with the manufacturer.

1. Single pulse surge current capacity: Single pulse surge current tested in a mode at rated surge currents.

2. Single pulse surge current capacity test: An initial UL 1449 defined 1.2 x 50μs, 6000V open circuit voltage waveform and an 8 x 20μs, 500A and 3kA short circuit current waveform shall be applied to benchmark the unit's suppression voltage (VPR).

3. A single 8 x 20μs waveform pulse of maximum rated surge current per mode shall then be applied. To complete the test, another UL 1449 surge shall be applied to verify the unit's survival. Survival is achieved if the suppression voltage measured from the two UL1449 surges does not vary by more than 10%.

B. Minimum Repetitive Surge Current Capacity:

1. Service entrance suppressor units should be tested repetitively at an independent lab to verify repetitive capacity.

2. Minimum Repetitive Surge Current Capacity Test:

a. An initial UL 1449 surge defined as 1.2 x 50μs, 6000V open circuit voltage waveform and an 8 x 20μs, 500A and 3kA short circuit current waveform shall be applied to benchmark the unit's suppression voltage.

b. A repetitive number of ANSI/IEEE C62.41.2-2002 (Category C3) surges, defined as a 1.2 x 50μs 10kV or 20kV open circuit voltage waveform and an 8 x 20μs 10,000A short circuit current waveform, shall then be applied at one-minute intervals.

c. To complete the test, another UL 1449 surge shall be applied to verify the unit's survival.

3. Survival is achieved if the suppression voltage (VPR) does not vary by more than 10%.

4. Proof of such testing shall be the test log generated by the surge generator.

C. Provide UL 1449 classification white sheet pages indicating the VPR (voltage protection rating) for each SPD unit submitted for this product using the 6kV/3kA combination wave surge.

D. Warranty: Ten (10) years. Includes workmanship, installation and programming.

E. No scheduled parts replacement or preventative maintenance shall be required.

PART 2 - PRODUCTS

2.1 DESCRIPTION

A. General: The unit shall provide transient voltage suppression, surge current diversion and high-frequency noise attenuation, when connected in parallel to the facilities distribution system. The unit MCOV shall not be less than 115% of the nominal system voltage. Operating frequency shall be for a 60 Hz system. The unit shall provide protection in all normal modes for "wye" and "delta" systems.

B. Short Circuit Current Rating: Provide factory label for SCCR rating. The short circuit current rating shall be the larger of the listed value on the drawings or as required by the equipment protected.

2.2 RATINGS

A. SPDSecondary Distribution Suppressors:

1. For 277/480 and 120/208-volt, 3 phase, 4 wire, type 2, category B3/C1 unit.

a. Surge current capacity: 60,000/120,000amps per protection mode/phase

b. Nominal Discharge Current (IN): 20 kA.

c. Mounting: Refer to the drawings.

d. Voltage Protection Rating: Refer to requirements below.

e. Components: Minimum component size of 20mm metal thermally protected oxide varistors (MOV).

2. Manufacturers:

a. Square D Surgelogic EMA Series

b. Siemens TPS4 Series

c. Eaton SPD Series

d. Current Technology Current Guard Plus

e. ASCO Power Technologies 400 Series

f. LEA International CFS Series

B. Voltage Protection Rating:

1. Protection modes and UL 1449 voltage protection rating for surge suppression units per each mode (L-N, L-L, L-G, and N-G as appropriate).

a. 277/480 Volt, 3 phase, 4 wire.1200 Volt L-N, L-G, N-G and 1800 Volt L-L

b. 480 Volt, 3 phase, 3 wire. 2000 Volt L-G, L-L

c. 120/208 Volt, 3 phase, 4 wire. 700 Volt L-N, N-G, 800 Volt L-G and 1200 Volt L-L

C. EMI/RFI Noise Rejection or Filtering:

1. Each unit shall include a UL1283 first order, high-frequency filter for noise filtering between 10 KHz and 100 MHz.

D. Indication:

1. Each unit shall include solid-state indicators with externally mounted LED visual status indicators that indicate on-line status of each protection mode of the unit.

2. Each unit shall include a visual indicator that indicates the unit is functioning properly and providing protection.

3. Each unit shall include an audible alarm with silencing switch to indicate when protection has failed.

4. Provide each service entrance type unit(s) with a transient counter.

E. Fuses:

1. Use fuses recommended by the manufacturer to satisfy repetitive UL 1449 operation of the surge suppression unit.

2. Fuses shall be rated 200, 000 AIC minimum interrupting capacity.

PART 3 - EXECUTION

3.1 INSTALLATION

A. Mounting Location:

1. The unit shall be installed as close as practical to the panellugs in accordance with applicable national/Local Electrical Codes and the manufacturer's recommended installation instructions. Connect the unit to thepanel using a conduit nipple. Flush mount the unit in the front of the switchboard. Mount unit directly across from the breaker or disconnect serving it.

2. Integral surge protection devices mount between the main and branch circuit breakers.

3. Internal surge protection devices shall be installed in a barrier compartment isolated from other components.

B. Connections:

1. Contractor shall provide wire and circuit breakers sized per the approved manufacturer's requirements. Maximum lead length from protected bus to surge protection device shall be per manufacturer's requirements, but no greater than 5'-0".

2. The surge protection unit shall be isolatable from the electrical distribution system via 3 pole circuit breaker mounted in the switchboard/panelboardor be equipped with a factory supplied integral fused switch or circuit breaker. Single phase 120-volt units shall be hardwired without a disconnecting means.

3. Neutral and ground shall not be bonded together at secondary panelboard locations.

C. Additional Locations: Critical Load Protection - Fixed Equipment (120 Vac):

1. Install an A3surge protection device between each of the following equipment items and its power supply conductors.

a. Fire alarm master panel

b. Phone switch

c. Intercom master

d. Building management system master

e. Security system master

f. Telephone switch

g. TV head

END OF SECTION 26 43 00

SECTION 26 51 19 - LED LIGHTING

PART 1 - GENERAL

1.1 RELATED SECTIONS

A. The lighting system design includes a combination of luminaire sources, lighting control components, programming sequences, and supplementary components for building and energy code compliance. The design uses performance-based specifications for portions of the lighting system to account for the limitation of comparable product solutions available by competitive manufacturers. The Contractor shall reference related specification sections, plans, schedules, and details prior to submitting pricing, submittals, and installation. The Contractor shall coordinate system component compatibility among various manufacturers and suppliers for a turnkey lighting system.

1.2 SUBMITTALS

A. Submit product data under provisions of Section 26 05 00.

B. Basic Requirements of Submittal:

1. Submit product data sheets for luminaires, LED light engines, drivers and poles. Include complete product model number with all options as specified. Submittal shall be arranged with luminaires listed in ascending order, and with each luminaire's, LED light engine, driver, or pole information following luminaire's product data. Failure to organize submittal in this manner will result in the submittal being rejected.

2. Submit lens product data, dimensions and weights if not included in product data sheet submittal.

3. Include outline drawings, support points, weights, and accessory information for each luminaire.

C. LED Lighting - Control Compatibility Submittal:

1. Submit lighting control capability data for each LED luminaire. The submittal shall clearly identify device data proposed by the Contractor and approved by the luminaire manufacturer for dimming, switching, addressable, wireless, and similar control characteristics.

1.3 WARRANTY

A. LED Light Engines and Drivers:

1. LED Drivers and Dimming Drivers: Five (5) years

2. Light Emitting Diode (LED) Light Engines: Five (5) years

B. Emergency Lighting Units, drivers and Exit Signs:

1. Emergency Lighting Units and drivers: Three (3) year, non-prorated

2. Exit Signs: Three (3) year, non-prorated

3. Emergency Unit and Exit Sign Battery: Sealed lead acid or lead calcium cell, requiring no maintenance or replacement for ten (10) years under normal conditions.

C. Automatic Load Control Relay (ALCR): Five (5) year

PART 2 - PRODUCTS

2.1 INTERIOR LUMINAIRES AND ACCESSORIES - GENERAL

A. Lensed Troffers: Provide hinged frames with latches and 0.125-inch thick virgin acrylic lenses. Prismatic lenses shall have depth of no less than 0.080", KSH12 or equal. Other lenses as scheduled.

B. Recessed Luminaires: Confirm ceiling and wall type and furnish trim and accessories necessary to permit proper installation in each system. Where fire-rated ceiling or wall assemblies are specified, furnish and install listed enclosures around luminaires that maintain the system rating.

C. Luminaires: Louvers shall be anodized low iridescent specular aluminum with mitered corners and interlocking construction.

D. Suspended Luminaires: Coordinate power feed and suspension canopies with ceiling type and architectural RCP for proper fit and location. Ensure finished installations are plumb and level at elevations specified. Verify suspension length prior to submittal.

E. Painted reflector surfaces shall have a minimum reflectance of 90%.

F. All painted components shall be painted after fabrication.

2.2 EXTERIOR LUMINAIRES AND ACCESSORIES - GENERAL

A. Listed for wet or damp location as scheduled. Provide ingress protection (IP) rating when scheduled.

B. Provide low temperature LED drivers, with reliable starting to -20ºF.

C. In-grade luminaires shall have lamp/optic separation to prevent surface temperature from exceeding 115°F. Compartment separation of wire entry and control gear/lamp chamber.

D. Exterior LED luminaires shall contain separate, easily accessible and replaceable Category C surge protection device.

2.3 LIGHT EMITTING DIODE (LED) LUMINAIRE SYSTEMS

A. Light emitting diodes used in interior applications shall have a minimum color rendering index (CRI) of 80or as indicated on drawings Light emitting diodes used in exterior applications shall have a minimum color rendering index (CRI) of 70. Color temperature of the luminaires shall be as noted on the luminaire schedule. Provide light source color consistency by utilizing a binning tolerance within a maximum 3-step McAdam ellipse unless noted otherwise.

B. Rated life shall be minimum of 50,000 hours at L70.

C. LED chips shall be wired so that failure of one chip does not prohibit operation of the remainder of the chip array.

D. Luminaire delivered lumens is defined as the absolute lumens per the manufacturers LM-79-08 test report.

E. LED luminaires shall be designed for ease of component replacement including modular replaceable boards or Zhaga sockets. Luminaires that are factory sealed and do not have field replaceable parts shall provide a 10-year warranty.

F. LED light engine shall have a maximum LLD of 0.85 at 50,000hours at 25°C ambient.

G. LED Driver:

1. Solid state driver with integral heat sink. Driver shall have over-heat, short-circuit and overload protection, power factor 0.90 or above and maximum total harmonic distortion of20%. Driver shall have a voltage fluctuation tolerance of +/- 10%.

2. Drivers shall have dimming capabilities as outlined in the luminaire schedule for each luminaire type. Dimming shall control light output in a continuous curve from 100% to 10% unless noted otherwise.

3. Driver shall have a minimum of 50,000 hours rated life.

4. Driver shall be tested to ANSI C82-16 for input current inrush, total harmonic distortion (THD), and power factor. Driver start time shall be less than 0.5 seconds to 98% of initial light output. Flicker should be less than 30% throughout the operating range.

5. Driver shall be field replaceable without removal of the luminaire.

6. Class A sound rating; inaudible in a 27 dBA ambient.

7. Demonstrate no visible change in light output with a variation of plus or minus 10 percent change in line-voltage input.

2.4 LED EMERGENCY LIGHTING UNITS

A. Self-Powered Emergency Lighting Units: One-piece, self-contained unit with sealed, maintenance-free nickel cadmium battery, automatic charger and electronic circuitry. Relay automatically energizes lamp from battery when circuit voltage drops to 80 percent of nominal voltage or below. When normal voltage is restored, relay disconnects lamps from battery, and battery is automatically recharged and floated on charger.

B. Battery: Maintenance free lead calcium type, with 90 minute capacity to supply the connected lamp load.

C. Charger: Dual-rate solid state charger, capable of maintaining the battery in a full-charge state during normal conditions, and capable of recharging discharged battery to full charged within 168 hours. Low voltage disconnect to prevent deep discharge of battery.

D. Indicators: Provide lamps to indicate AC ON and RECHARGING.

E. Provide test switch to transfer unit from normal supply to battery supply.

F. Self-Diagnostics and Testing:

1. Unit shall be self-diagnostic with continuous monitoring of charger performance and battery voltage. Any malfunction of battery, charger, transfer circuit, or emergency lamps shall be detected and visually indicated.

2. Unit shall be programmed to exercise the battery and test emergency operation by performing a five-minute discharge/diagnostic cycle every six months. A manual test switch shall allow a five-minute discharge/diagnostic test at any time.

2.5 EMERGENCY EXIT SIGNS

A. Exit Signs: Stencil face, 6-inch high letters, directional arrows as indicated, universal mounting type as indicated on the drawings.

B. Self-Powered Exit Signs: Stencil face, 6-inch high letters, directional arrows as indicated, universal mounting type as indicated on the drawings. One-piece, self-contained unit with sealed, maintenance-free nickel cadmium battery, test switch, AC ON pilot light, automatic charger, and electronic circuitry. Power failure relay automatically energizes lamp from battery when circuit voltage drops to 80 percent of nominal voltage or below. When normal voltage is restored, relay disconnects lamps from battery, and battery is automatically recharged and floated on charger.

C. Directional Indicators: The directional indicator for exit signage shall be of a chevron type meeting all requirements of NFPA 101.

D. Self-Diagnostics and Testing:

1. Unit shall be self-diagnostic with continuous monitoring of charger performance and battery voltage. Any malfunction of battery, charger, transfer circuit, or emergency lamps shall be detected and visually indicated.

2. Unit shall be programmed to exercise the battery and test emergency operation by performing a five-minute discharge/diagnostic cycle every six months. A manual test switch shall allow a five minute discharge/diagnostic test at any time.

2.6 EMERGENCY INVERTER FOR LED LIGHT ENGINES (INDIVIDUAL LUMINAIRES - INTEGRAL)

A. Unit: Self-contained, with automatic transfer to battery supply on loss of normal power, UL 924 listed for factory or field installation, indoor and damp locations, 32ºF to 122ºF (0ºC to 50ºC) operating temperature. Compatible with switched, dimmed, and unswitched lighting controls. Compatible with LED light engines. The inverter output shall be sinusoidal with solid-state low voltage disconnect circuit.

B. Battery: Sealed, high temperature, maintenance free, nickel cadmium battery with capacity to provide 90minutes of emergency operation at full lumen and wattage output, with 24-hour recharge time. Refer to Luminaire Schedule for lumen and wattage requirements.

C. Features: Integral battery charger with LED charging indicator light, test switch, electronic circuitry for use with LED drivers. Test and monitor switch shall be integral to luminaire.

D. Factory and Field Installation: Listed for installation inside and adjacent to luminaire. Refer to Luminaire Schedule for individual luminaire requirements. Remote-mounted units shall be located above finished ceiling, adjacent to luminaire, and accessible from below through luminaire opening.

E. Self-Test Diagnostics and Testing: Provide with listed automatic monthly self-test diagnostics.

F. Manufacturers:

1. Myers LVU Series

PART 3 - EXECUTION

3.1 INSTALLATION

A. Securely fasten luminaires to the listed and labeled ceiling framing member by mechanical means such as bolts, screws, rivets or listed clips identified for use with the type of ceiling framing members. The architectural ceiling framing system may be used in lieu of independent support with prior written approval by the ceiling system manufacturer and Authority Having Jurisdiction (AHJ). Luminaires and wiring installed in fire-rated ceiling assemblies shall be independently supported for all applications.

1. Install recessed flanged luminaires to permit removal from below. Use manufacturer-supplied plaster frames and swing gate supports. Provide independent support as follows:

a. Luminaires less than 56 lbs: Provide a minimum of two (2) #12 gauge suspended ceiling support wires located on diagonal corners of the luminaires.

b. Luminaires 56 lbs or greater: Provide a minimum of four (4) #12 gauge suspended ceiling support wires located on diagonal corners of the luminaires. Support luminaire independent of the ceiling system.

c. Luminaires larger than eight square feet (8 ft2): Support luminaire independent of the ceiling system.

B. Do not fasten luminaire supports to piping, ductwork, mechanical equipment, or conduit, unless otherwise noted. Support wires shall be tightly wrapped (minimum of three turns within 3 inches of the connection) and sharply bend to prevent vertical movement.

C. Support suspended or pendant mounted luminaires independent of ceiling grid with adjustable stainless steel aircraft cables or per luminaire schedule mounting requirements. Suspension assembly and anchors shall be capable of supporting 300 pounds dead load at each suspension point.

D. Support wire used to independently support luminaires, raceways, and wiring systems shall be distinguishable from ceiling support systems by color (field paint), tagging or equivalent means.

E. Install lamps in lamp holders of luminaires.

F. Adjust aimable luminaires to obtain lighting levels on objects and areas as directed to obtain desired lighting levels.

G. Recessed luminaires and other optical accessories shall remain in protective wraps or films until construction in area is complete and area has been cleaned.

H. Industrial Pendant Luminaires: Usehangers rated 500 pounds minimum or provide safety chain between driver and structure. Provide safety chain between reflector and driver.

END OF SECTION 26 51 19

SECTION 28 31 00 - FIRE ALARM AND DETECTION SYSTEMS PERFORMANCE BASED

PART 1 - GENERAL

1.1 Refer to FIRE ALARM CRITERIA and OPERATION MATRIX provided on the FIRE ALARM RISER DIAGRAM drawing.

END OF SECTION 28 31 00

kasper architects + assoc.

10175 Fortune Parkway, Suite 701
Jacksonville, FL 32256
p 904.683.9201 f 904.683.9702

www.kasperarch.com
FL License No.: AA26000802

IMEG
formerly McVeigh & Mangum Engineering
www.IMEGCorp.com
9133 R.G. Skinner Parkway
Jacksonville, Florida 32256
Ph: (904) 483-5200 Fax: (904) 636-6700
email: mail@McVeighMangum.com
CA 6330
Eng. of Record: Thomas C. Nielsen
License No.: 53492

1

ALL DESIGN PRIOR TO 08/28/2025 WAS PERFORMED BY IMEG UNDER THE RESPONSIBLE CHARGE OF THOMAS C. NIELSEN, PE #53492.
ALL SUBSEQUENT DESIGN BY IMEG IS UNDER THE RESPONSIBLE CHARGE OF BRIAN J. LEAVITT, PE #87733.

BRIAN JOSEPH LEAVITT
LICENSE
No. 87733
STATE OF FLORIDA
PROFESSIONAL ENGINEER

Brian Leavitt

Digitally signed by Brian Leavitt
Reason: This item has been electronically signed and sealed by Brian J. Leavitt PE using a Digital Signature and Date. Printed copies of this document are not considered signed and sealed and the signature must be verified on any electronic copies
Date: 2025.08.28 14:58:14-05'00'

BUSY BEE
ELLISVILLE

136 SW WEBBS GLN
LAKE CITY, FL 32024

PROJECT NO.: 22024

DATE: 06/02/2025

PRIOR ISSUES:

1	08/24/2025	ASI #1

ELECTRICAL SPECIFICATIONS

E8.3

DRAWN BY: IMEG
CHECKED BY: IMEG

100% CONSTRUCTION DOCUMENTS

© 2013

ALL REPORTS, SPECIFICATIONS, COMPUTER FILES, FIELD DATA AND OTHER DOCUMENTATION PREPARED BY KASPER ARCHITECTURE & DEVELOPMENT, INC. (KAD) AS INSTRUMENTS OF SERVICE SHALL REMAIN THE PROPERTY OF KAD. KAD SHALL RETAIN ALL COMMON LAW, STATUATORY AND OTHER RESERVED RIGHTS, INCLUDING THE COPYRIGHT THERETO. THIS DRAWING SHALL NEVER BE REPRODUCED IN WHOLE OR IN PART WITHOUT THE EXPRESS WRITTEN PERMISSION OF KAD