Lumber design values are in accordance with ANSI/TPI 1 section 6.3
These truss designs rely on lumber values established by others.

RE: 0526-048 - AYOUB MARCUS

MiTek, Inc.
16023 Swingley Ridge Rd.
Chesterfield, MO 63017
314.434.1200

Site Information:

Customer Info: STEVE AYOUB Project Name: MARCUS AYOUB Model: .
Lot/Block: . Subdivision: .
Address: 369 SW BUFFALO AVE, .
City: FORT WHITE State: FL

Name Address and License # of Structural Engineer of Record, If there is one, for the building.

Name: License #:
Address:
City: State:

General Truss Engineering Criteria & Design Loads (Individual Truss Design Drawings Show Special Loading Conditions):

Design Code: FBC2023/TPI2014 Design Program: MiTek 20/20 8.8
Wind Code: ASCE 7-22 Wind Speed: 130 mph
Roof Load: 40.0 psf Floor Load: N/A psf

This package includes 25 individual, Truss Design Drawings and 0 Additional Drawings.
With my seal affixed to this sheet, I hereby certify that I am the Truss Design Engineer and this index sheet conforms to 61G15-31.003, section 5 of the Florida Board of Professional Engineers Rules.

No.	Seal#	Truss Name	Date	No.	Seal#	Truss Name	Date
1	T41656670	A01	6/24/26	23	T41656692	J04	6/24/26
2	T41656671	A01A	6/24/26	24	T41656693	J04A	6/24/26
3	T41656672	A02	6/24/26	25	T41656694	J04B	6/24/26
4	T41656673	A02A	6/24/26				
5	T41656674	A03	6/24/26				
6	T41656675	A03A	6/24/26				
7	T41656676	A04	6/24/26				
8	T41656677	A04A	6/24/26				
9	T41656678	A05	6/24/26				
10	T41656679	A05A	6/24/26				
11	T41656680	B01	6/24/26				
12	T41656681	B02	6/24/26				
13	T41656682	CJ01	6/24/26				
14	T41656683	CJ01B	6/24/26				
15	T41656684	J01	6/24/26				
16	T41656685	J01B	6/24/26				
17	T41656686	J02	6/24/26				
18	T41656687	J02A	6/24/26				
19	T41656688	J02B	6/24/26				
20	T41656689	J03	6/24/26				
21	T41656690	J03A	6/24/26				
22	T41656691	J03B	6/24/26				

The truss drawing(s) referenced above have been prepared by MiTek USA, Inc. under my direct supervision based on the parameters provided by Mayo Truss Company, Inc..

Truss Design Engineer's Name: Lee, Julius
My license renewal date for the state of Florida is February 28, 2027.

IMPORTANT NOTE: The seal on these truss component designs is a certification that the engineer named is licensed in the jurisdiction(s) identified and that the designs comply with ANSI/TPI 1. These designs are based upon parameters shown (e.g., loads, supports, dimensions, shapes and design codes), which were given to MiTek or TRENCO. Any project specific information included is for MiTek's or TRENCO's customers file reference purpose only, and was not taken into account in the preparation of these designs. MiTek or TRENCO has not independently verified the applicability of the design parameters or the designs for any particular building. Before use, the building designer should verify applicability of design parameters and properly incorporate these designs into the overall building design per ANSI/TPI 1, Chapter 2.

JULIUS LEE
LICENSE
No 34869
STATE OF
FLORIDA
PROFESSIONAL ENGINEER

Julius Lee PE No. 34869
MiTek Inc. DBA MiTek USA FL Cert 6634
16023 Swingley Ridge Rd. Chesterfield, MO 63017
Date:

June 24,2026

Lee, Julius

Job	Truss	Truss Type	Qty	Ply	AYOUB MARCUS
0526-048	A01	Common	4	1	T41656670 Job Reference (optional)

Mayo Truss Company, Inc., Mayo, FL - 32066,

Run: 8.83 S Mar 11 2026 Print: 8.830 S Mar 11 2026 MiTek Industries, Inc. Tue Jun 23 15:45:05 Page: 1
ID:MYOh6kgyWisJ90TPYvmd2FzBfsQ-RfC?PsB70Hq3NSgPqnL8w3uITXbGKWrCDoi7J4zJC?f

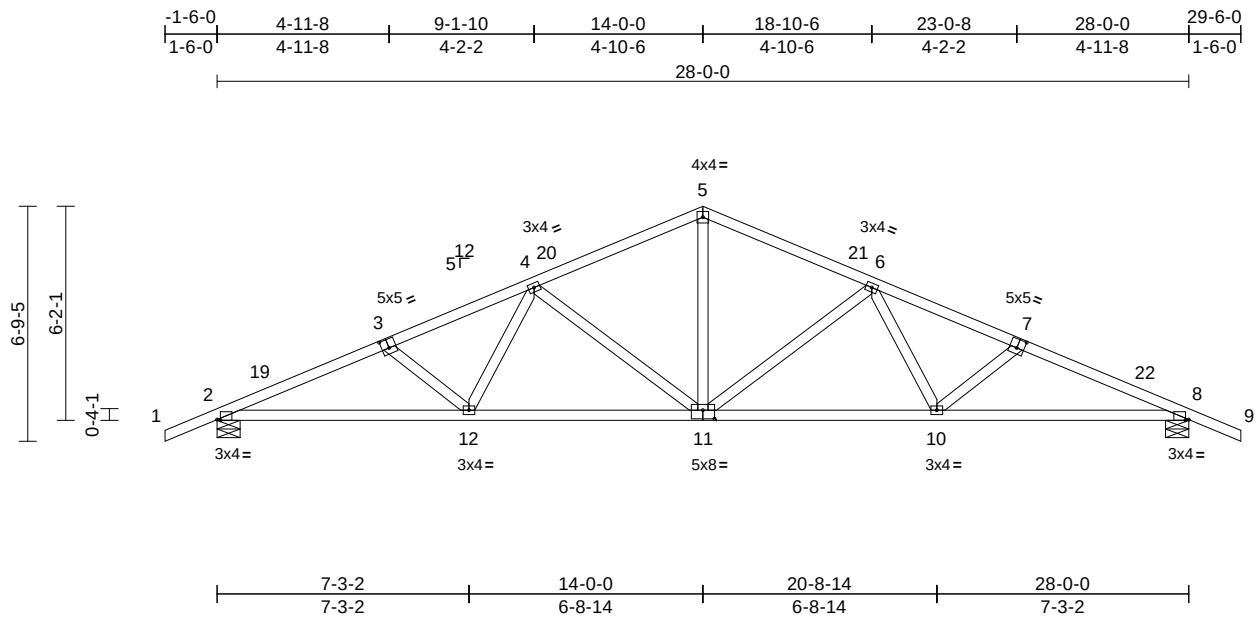

Scale = 1:66.4

Plate Offsets (X, Y): [2:0-1-2,Edge], [3:0-2-8,0-3-0], [7:0-2-8,0-3-0], [8:0-1-2,Edge], [11:0-4-0,0-3-0]

Loading	(psf)	Spacing	2-0-0	CSI		DEFL	in	(loc)	l/defl	L/d	PLATES	GRIP
TCLL (roof)	20.0	Plate Grip DOL	1.25	TC	0.27	Vert(LL)	-0.11	11	>999	240	MT20	244/190
TCDL	10.0	Lumber DOL	1.25	BC	0.62	Vert(CT)	-0.25	10-11	>999	180		
BCLL	0.0*	Rep Stress Incr	YES	WB	0.39	Horz(CT)	0.09	8	n/a	n/a		
BCDL	10.0	Code	FBC2023/TPI2014	Matrix-AS							Weight: 139 lb	FT = 20%

LUMBER
TOP CHORD 2x4 SP No.2
BOT CHORD 2x4 SP No.2
WEBS 2x4 SP No.2

BRACING
TOP CHORD Structural wood sheathing directly applied.
BOT CHORD Rigid ceiling directly applied.

REACTIONS (size) 2=0-8-0, 8=0-8-0
Max Horiz 2=-96 (LC 10)
Max Uplift 2=-35 (LC 12), 8=-35 (LC 12)
Max Grav 2=1210 (LC 1), 8=1210 (LC 1)

FORCES (lb) - Maximum Compression/Maximum Tension
TOP CHORD 1-2=0/35, 2-4=-2374/102, 4-5=-1523/126, 5-6=-1523/126, 6-8=-2374/102, 8-9=0/35
BOT CHORD 2-12=-28/2161, 10-12=-19/1798, 8-10=-41/2161
WEBS 5-11=0/837, 3-12=-275/60, 4-12=0/404, 4-11=-577/80, 6-11=-577/80, 6-10=0/404, 7-10=-275/60

NOTES
1) Unbalanced roof live loads have been considered for this design.
2) Wind: ASCE 7-22; Vult=130mph (3-second gust) Vasd=101mph; TCDL=6.0psf; BCDL=6.0psf; h=15ft; B=45ft; L=28ft; eave=4ft; Cat. II; Exp B; Enclosed; MWFRS (directional) and C-C Zone3 -1-6-0 to 1-6-0, Zone1 1-6-0 to 14-0-0, Zone2 14-0-0 to 18-2-15, Zone1 18-2-15 to 29-6-0 zone; cantilever left and right exposed ; end vertical left and right exposed;C-C for members and forces & MWFRS for reactions shown; Lumber DOL=1.60 plate grip DOL=1.60
3) Building Designer / Project engineer responsible for verifying applied roof live load shown covers rain loading requirements specific to the use of this truss component.
4) This truss has been designed for a 10.0 psf bottom chord live load nonconcurrent with any other live loads.
5) * This truss has been designed for a live load of 20.0psf on the bottom chord in all areas where a rectangle 3-06-00 tall by 2-00-00 wide will fit between the bottom chord and any other members.
6) Provide mechanical connection (by others) of truss to bearing plate capable of withstanding 35 lb uplift at joint 2 and 35 lb uplift at joint 8.
7) This truss design requires that a minimum of 7/16" structural wood sheathing be applied directly to the top chord and 1/2" gypsum sheetrock be applied directly to the bottom chord.

LOAD CASE(S) Standard

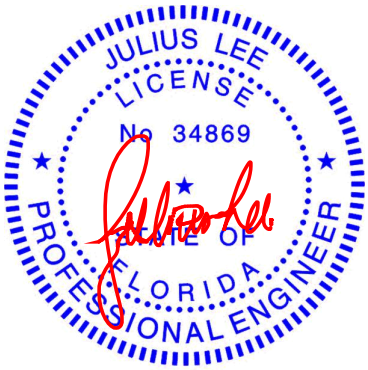

Julius Lee PE No. 34869
MiTek Inc. DBA MiTek USA FL Cert 6634
16023 Swingley Ridge Rd. Chesterfield, MO 63017
Date:

June 24,2026

WARNING - Verify design parameters and READ NOTES ON THIS AND INCLUDED MITEK REFERENCE PAGE MII-7473 rev. 1/2/2023 BEFORE USE.
Design valid for use only with MiTek® connectors. This design is based only upon parameters shown, and is for an individual building component, not a truss system. Before use, the building designer must verify the applicability of design parameters and properly incorporate this design into the overall building design. Bracing indicated is to prevent buckling of individual truss web and/or chord members only. Additional temporary and permanent bracing is always required for stability and to prevent collapse with possible personal injury and property damage. For general guidance regarding the fabrication, storage, delivery, erection and bracing of trusses and truss systems, see **ANSI/TPI1 Quality Criteria and DSB-22** available from Truss Plate Institute (www.tpinst.org) and **BCSI Building Component Safety Information** available from the Structural Building Component Association (www.sbcscomponents.com)

MiTek®
16023 Swingley Ridge Rd.
Chesterfield, MO 63017
314.434.1200 / MiTek-US.com

Job	Truss	Truss Type	Qty	Ply	AYOUB MARCUS
0526-048	A01A	Common	3	1	T41656671 Job Reference (optional)

Mayo Truss Company, Inc., Mayo, FL - 32066, Run: 8.83 S Mar 11 2026 Print: 8.830 S Mar 11 2026 MiTek Industries, Inc. Tue Jun 23 15:45:06 Page: 1
ID:UgrAF335R1L_ShmVnYKbCVzBfqd-RfC?PsB70Hq3NSgPqnL8w3uITXbGKWrCDoi7J4zJC?f

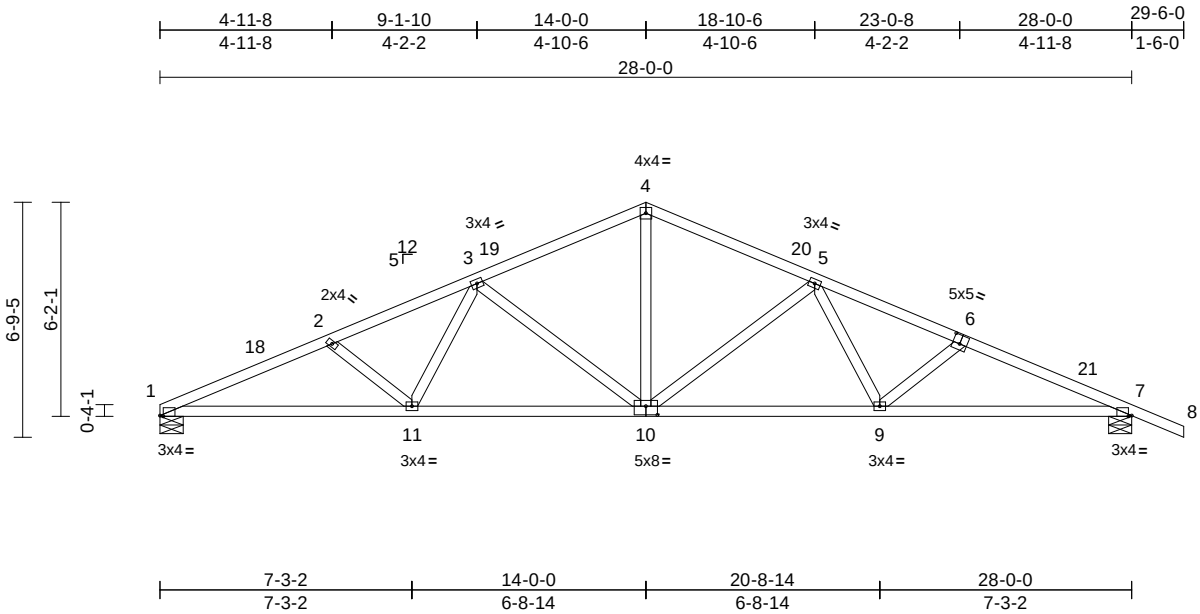

Scale = 1:66.4

Plate Offsets (X, Y): [1:0-1-2,Edge], [6:0-2-8,0-3-0], [7:0-1-2,Edge], [10:0-4-0,0-3-0]

Loading	(psf)	Spacing	2-0-0	CSI		DEFL	in	(loc)	l/defl	L/d	PLATES	GRIP
TCLL (roof)	20.0	Plate Grip DOL	1.25	TC	0.30	Vert(LL)	-0.12	9-10	>999	240	MT20	244/190
TCDL	10.0	Lumber DOL	1.25	BC	0.63	Vert(CT)	-0.25	9-10	>999	180		
BCLL	0.0*	Rep Stress Incr	YES	WB	0.39	Horz(CT)	0.09	7	n/a	n/a		
BCDL	10.0	Code	FBC2023/TPI2014	Matrix-AS							Weight: 136 lb	FT = 20%

LUMBER
TOP CHORD 2x4 SP No.2
BOT CHORD 2x4 SP No.2
WEBS 2x4 SP No.2

BRACING
TOP CHORD Structural wood sheathing directly applied.
BOT CHORD Rigid ceiling directly applied.

REACTIONS (size) 1=0-8-0, 7=0-8-0
Max Horiz 1=-95 (LC 10)
Max Uplift 7=-36 (LC 12)
Max Grav 1=1118 (LC 1), 7=1212 (LC 1)

FORCES (lb) - Maximum Compression/Maximum Tension
TOP CHORD 1-2=-2407/146, 2-3=-2187/125, 3-4=-1529/136, 4-5=-1529/127, 5-7=-2380/112, 7-8=0/35
BOT CHORD 1-11=-72/2197, 9-11=-28/1810, 7-9=-51/2167
WEBS 3-11=0/408, 4-10=-7/842, 5-10=-578/80, 6-9=-275/60, 2-11=-293/89, 3-10=-587/81, 5-9=0/404

NOTES
1) Unbalanced roof live loads have been considered for this design.
2) Wind: ASCE 7-22; Vult=130mph (3-second gust) Vasd=101mph; TCDL=6.0psf; BCDL=6.0psf; h=15ft; B=45ft; L=28ft; eave=4ft; Cat. II; Exp B; Enclosed; MWFRS (directional) and C-C Zone3 0-0-0 to 3-0-0, Zone1 3-0-0 to 14-0-0, Zone2 14-0-0 to 18-2-15, Zone1 18-2-15 to 29-6-0 zone; cantilever left and right exposed ; end vertical left and right exposed;C-C for members and forces & MWFRS for reactions shown; Lumber DOL=1.60 plate grip DOL=1.60
3) Building Designer / Project engineer responsible for verifying applied roof live load shown covers rain loading requirements specific to the use of this truss component.
4) This truss has been designed for a 10.0 psf bottom chord live load nonconcurrent with any other live loads.
5) * This truss has been designed for a live load of 20.0psf on the bottom chord in all areas where a rectangle 3-06-00 tall by 2-00-00 wide will fit between the bottom chord and any other members.
6) Provide mechanical connection (by others) of truss to bearing plate capable of withstanding 36 lb uplift at joint 7.
7) This truss design requires that a minimum of 7/16" structural wood sheathing be applied directly to the top chord and 1/2" gypsum sheetrock be applied directly to the bottom chord.

LOAD CASE(S) Standard

Julius Lee PE No. 34869
MiTek Inc. DBA MiTek USA FL Cert 6634
16023 Swingley Ridge Rd. Chesterfield, MO 63017
Date: June 24,2026

WARNING - Verify design parameters and READ NOTES ON THIS AND INCLUDED MITEK REFERENCE PAGE MII-7473 rev. 1/2/2023 BEFORE USE.
Design valid for use only with MiTek® connectors. This design is based only upon parameters shown, and is for an individual building component, not a truss system. Before use, the building designer must verify the applicability of design parameters and properly incorporate this design into the overall building design. Bracing indicated is to prevent buckling of individual truss web and/or chord members only. Additional temporary and permanent bracing is always required for stability and to prevent collapse with possible personal injury and property damage. For general guidance regarding the fabrication, storage, delivery, erection and bracing of trusses and truss systems, see **ANSI/TPI1 Quality Criteria and DSB-22** available from Truss Plate Institute (www.tpinst.org) and **BCSI Building Component Safety Information** available from the Structural Building Component Association (www.sbcscomponents.com)

MiTek®
16023 Swingley Ridge Rd.
Chesterfield, MO 63017
314.434.1200 / MiTek-US.com

Job	Truss	Truss Type	Qty	Ply	AYOUB MARCUS
0526-048	A02	Hip	1	1	T41656672 Job Reference (optional)

Mayo Truss Company, Inc., Mayo, FL - 32066,

Run: 8.83 S Mar 11 2026 Print: 8.830 S Mar 11 2026 MiTek Industries, Inc. Tue Jun 23 15:45:06 Page: 1
ID:0lpDcXG7gyMjN9_ajwcLstzBfqN-RfC?PsB70Hq3NSgPqnL8w3uITXbGKWrCDoi7J4zJC?f

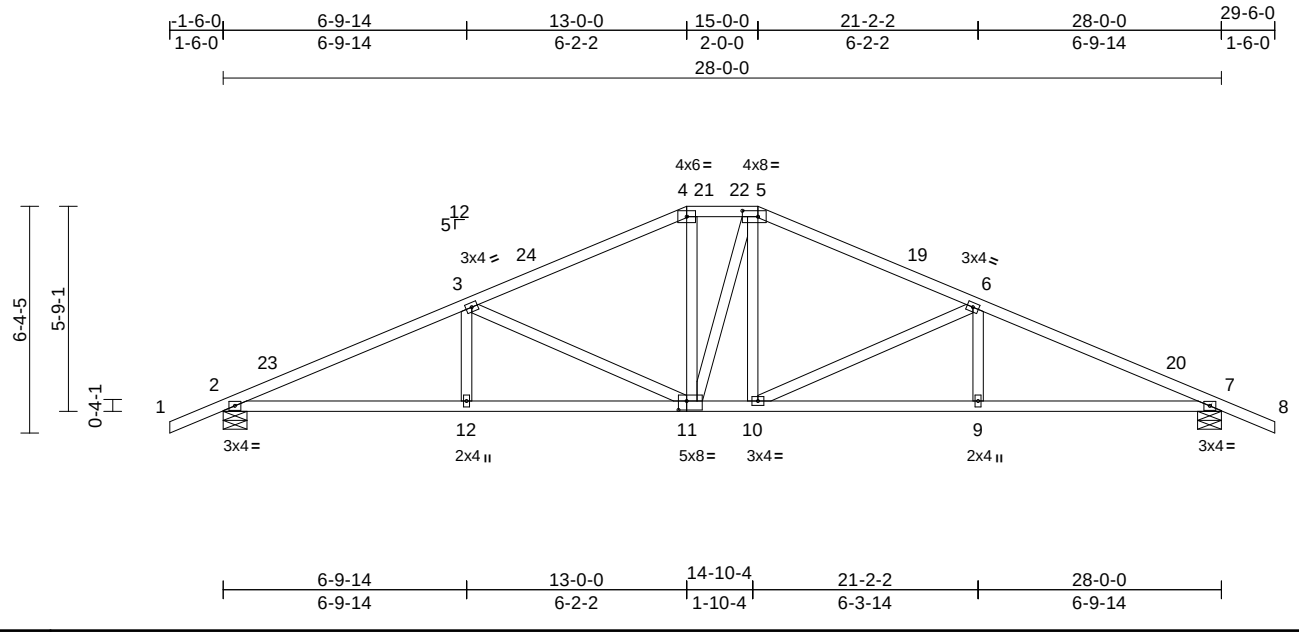

Scale = 1:64.6

Plate Offsets (X, Y): [5:0-5-4,0-2-0], [11:0-2-12,0-3-0]

Loading	(psf)	Spacing	2-0-0	CSI		DEFL	in	(loc)	l/defl	L/d	PLATES	GRIP
TCLL (roof)	20.0	Plate Grip DOL	1.25	TC	0.41	Vert(LL)	-0.11	10	>999	240	MT20	244/190
TCDL	10.0	Lumber DOL	1.25	BC	0.62	Vert(CT)	-0.25	9-10	>999	180		
BCLL	0.0*	Rep Stress Incr	YES	WB	0.61	Horz(CT)	0.09	7	n/a	n/a		
BCDL	10.0	Code	FBC2023/TPI2014	Matrix-AS							Weight: 142 lb	FT = 20%

LUMBER
TOP CHORD 2x4 SP No.2
BOT CHORD 2x4 SP No.2
WEBS 2x4 SP No.2

BRACING
TOP CHORD Structural wood sheathing directly applied.
BOT CHORD Rigid ceiling directly applied.

REACTIONS (size) 2=0-8-0, 7=0-8-0
Max Horiz 2=-90 (LC 10)
Max Uplift 2=-35 (LC 12), 7=-35 (LC 12)
Max Grav 2=1210 (LC 1), 7=1210 (LC 1)

FORCES (lb) - Maximum Compression/Maximum Tension
TOP CHORD 5-6=-1629/104, 6-7=-2311/84, 7-8=0/35, 4-5=-1439/118, 1-2=0/35, 2-3=-2310/85, 3-4=-1641/103
BOT CHORD 2-12=-6/2090, 10-12=-6/2090, 9-10=-15/2092, 7-9=-15/2092
WEBS 6-9=0/281, 6-10=-732/59, 5-10=0/382, 5-11=-154/158, 4-11=0/380, 3-11=-722/60, 3-12=0/277

NOTES
1) Unbalanced roof live loads have been considered for this design.
2) Wind: ASCE 7-22; Vult=130mph (3-second gust) Vasd=101mph; TCDL=6.0psf; BCDL=6.0psf; h=15ft; B=45ft; L=28ft; eave=4ft; Cat. II; Exp B; Enclosed; MWFRS (directional) and C-C Zone3 -1-6-0 to 1-6-0, Zone1 1-6-0 to 13-0-0, Zone3 13-0-0 to 15-0-0, Zone2 15-0-0 to 19-2-15, Zone1 19-2-15 to 29-6-0 zone; cantilever left and right exposed ; end vertical left and right exposed;C-C for members and forces & MWFRS for reactions shown; Lumber DOL=1.60 plate grip DOL=1.60
3) Building Designer / Project engineer responsible for verifying applied roof live load shown covers rain loading requirements specific to the use of this truss component.
4) Provide adequate drainage to prevent water ponding.
5) This truss has been designed for a 10.0 psf bottom chord live load nonconcurrent with any other live loads.
6) * This truss has been designed for a live load of 20.0psf on the bottom chord in all areas where a rectangle 3-06-00 tall by 2-00-00 wide will fit between the bottom chord and any other members.
7) Provide mechanical connection (by others) of truss to bearing plate capable of withstanding 35 lb uplift at joint 2 and 35 lb uplift at joint 7.
8) This truss design requires that a minimum of 7/16" structural wood sheathing be applied directly to the top chord and 1/2" gypsum sheetrock be applied directly to the bottom chord.

LOAD CASE(S) Standard

Julius Lee PE No. 34869
MiTek Inc. DBA MiTek USA FL Cert 6634
16023 Swingley Ridge Rd. Chesterfield, MO 63017

Date:

June 24,2026

WARNING - Verify design parameters and READ NOTES ON THIS AND INCLUDED MITEK REFERENCE PAGE MII-7473 rev. 1/2/2023 BEFORE USE.
Design valid for use only with MiTek® connectors. This design is based only upon parameters shown, and is for an individual building component, not a truss system. Before use, the building designer must verify the applicability of design parameters and properly incorporate this design into the overall building design. Bracing indicated is to prevent buckling of individual truss web and/or chord members only. Additional temporary and permanent bracing is always required for stability and to prevent collapse with possible personal injury and property damage. For general guidance regarding the fabrication, storage, delivery, erection and bracing of trusses and truss systems, see **ANSI/TPI1 Quality Criteria and DSB-22** available from Truss Plate Institute (www.tpinst.org) and **BCSI Building Component Safety Information** available from the Structural Building Component Association (www.sbcscomponents.com)

MiTek®
16023 Swingley Ridge Rd.
Chesterfield, MO 63017
314.434.1200 / MiTek-US.com

Job	Truss	Truss Type	Qty	Ply	AYOUB MARCUS
0526-048	A02A	Hip	1	1	T41656673 Job Reference (optional)

Mayo Truss Company, Inc., Mayo, FL - 32066, Run: 8.83 S Mar 11 2026 Print: 8.830 S Mar 11 2026 MiTek Industries, Inc. Tue Jun 23 15:45:06 Page: 1
ID:g3Xl7ePfret0p?vuQRq9LPzBfqB-RfC?PsB70Hq3NSgPqnL8w3uITXbGKWrCDoi7J4zJC?f

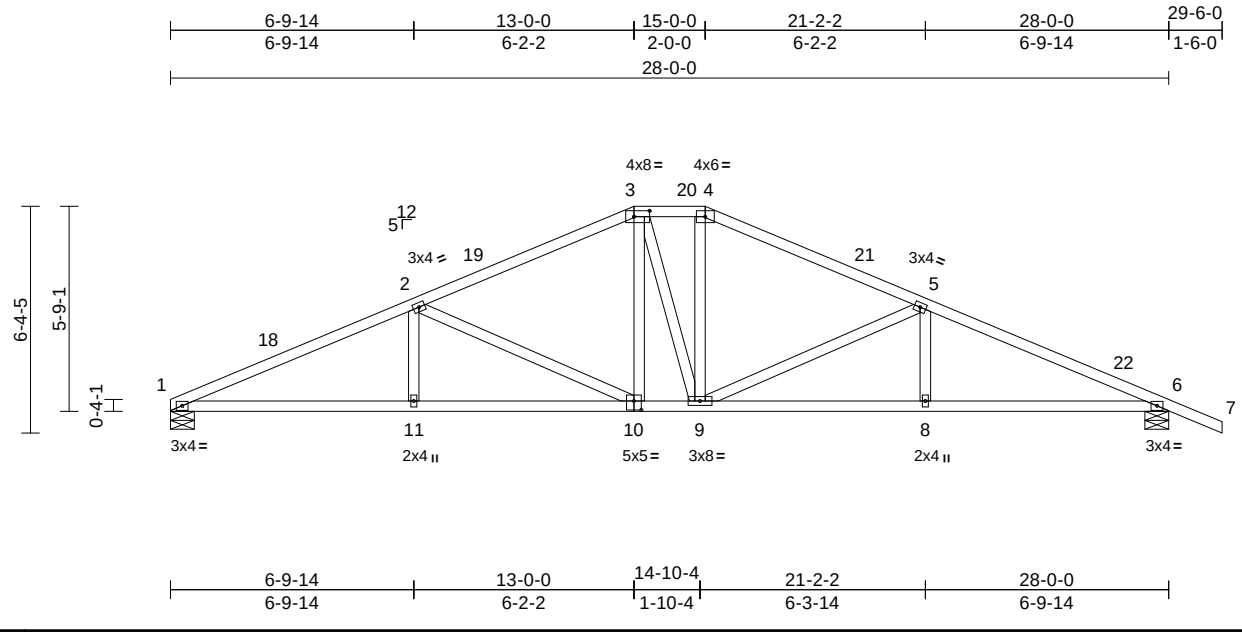

Scale = 1:64.6

Plate Offsets (X, Y): [3:0-5-4,0-2-0], [10:0-2-8,0-3-0]

Loading	(psf)	Spacing	2-0-0	CSI		DEFL	in	(loc)	l/defl	L/d	PLATES	GRIP
TCLL (roof)	20.0	Plate Grip DOL	1.25	TC	0.43	Vert(LL)	-0.11	10	>999	240	MT20	244/190
TCDL	10.0	Lumber DOL	1.25	BC	0.67	Vert(CT)	-0.24	10-11	>999	180		
BCLL	0.0*	Rep Stress Incr	YES	WB	0.62	Horz(CT)	0.09	6	n/a	n/a		
BCDL	10.0	Code	FBC2023/TPI2014	Matrix-AS							Weight: 140 lb	FT = 20%

LUMBER
TOP CHORD 2x4 SP No.2
BOT CHORD 2x4 SP No.2
WEBS 2x4 SP No.2

BRACING
TOP CHORD Structural wood sheathing directly applied.
BOT CHORD Rigid ceiling directly applied.

REACTIONS (size) 1=0-8-0, 6=0-8-0
Max Horiz 1=-89 (LC 10)
Max Uplift 6=-36 (LC 12)
Max Grav 1=1118 (LC 1), 6=1212 (LC 1)

FORCES (lb) - Maximum Compression/Maximum Tension
TOP CHORD 1-2=-2334/93, 2-3=-1645/110, 3-4=-1447/122, 4-5=-1637/109, 5-6=-2316/90, 6-7=0/35
BOT CHORD 1-11=-17/2115, 9-11=-16/2115, 8-9=-21/2096, 6-8=-21/2096
WEBS 2-11=0/281, 2-10=-745/63, 3-10=0/377, 3-9=-145/164, 4-9=0/377, 5-9=-729/59, 5-8=0/279

NOTES
1) Unbalanced roof live loads have been considered for this design.
2) Wind: ASCE 7-22; Vult=130mph (3-second gust) Vasd=101mph; TCDL=6.0psf; BCDL=6.0psf; h=15ft; B=45ft; L=28ft; eave=4ft; Cat. II; Exp B; Enclosed; MWFRS (directional) and C-C Zone3 0-0-0 to 3-0-0, Zone1 3-0-0 to 13-0-0, Zone3 13-0-0 to 15-0-0, Zone2 15-0-0 to 19-2-15, Zone1 19-2-15 to 29-6-0 zone; cantilever left and right exposed ; end vertical left and right exposed;C-C for members and forces & MWFRS for reactions shown; Lumber DOL=1.60 plate grip DOL=1.60
3) Building Designer / Project engineer responsible for verifying applied roof live load shown covers rain loading requirements specific to the use of this truss component.
4) Provide adequate drainage to prevent water ponding.
5) This truss has been designed for a 10.0 psf bottom chord live load nonconcurrent with any other live loads.
6) * This truss has been designed for a live load of 20.0psf on the bottom chord in all areas where a rectangle 3-06-00 tall by 2-00-00 wide will fit between the bottom chord and any other members.
7) Provide mechanical connection (by others) of truss to bearing plate capable of withstanding 36 lb uplift at joint 6.
8) This truss design requires that a minimum of 7/16" structural wood sheathing be applied directly to the top chord and 1/2" gypsum sheetrock be applied directly to the bottom chord.

LOAD CASE(S) Standard

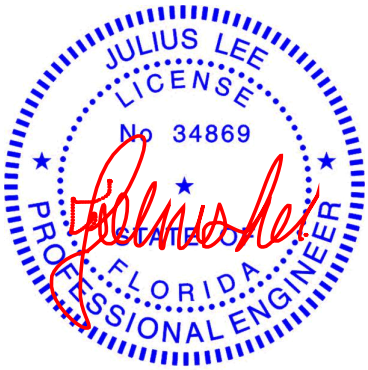

Julius Lee PE No. 34869
MiTek Inc. DBA MiTek USA FL Cert 6634
16023 Swingley Ridge Rd. Chesterfield, MO 63017
Date:

June 24,2026

WARNING - Verify design parameters and READ NOTES ON THIS AND INCLUDED MITEK REFERENCE PAGE MII-7473 rev. 1/2/2023 BEFORE USE.
Design valid for use only with MiTek® connectors. This design is based only upon parameters shown, and is for an individual building component, not a truss system. Before use, the building designer must verify the applicability of design parameters and properly incorporate this design into the overall building design. Bracing indicated is to prevent buckling of individual truss web and/or chord members only. Additional temporary and permanent bracing is always required for stability and to prevent collapse with possible personal injury and property damage. For general guidance regarding the fabrication, storage, delivery, erection and bracing of trusses and truss systems, see **ANSI/TPI1 Quality Criteria and DSB-22** available from Truss Plate Institute (www.tpinst.org) and **BCSI Building Component Safety Information** available from the Structural Building Component Association (www.sbcscomponents.com)

MiTek®
16023 Swingley Ridge Rd.
Chesterfield, MO 63017
314.434.1200 / MiTek-US.com

Job	Truss	Truss Type	Qty	Ply	AYOUB MARCUS
0526-048	A03	Hip	1	1	T41656674 Job Reference (optional)

Mayo Truss Company, Inc., Mayo, FL - 32066, Run: 8.83 S Mar 11 2026 Print: 8.830 S Mar 11 2026 MiTek Industries, Inc. Tue Jun 23 15:45:06 Page: 1
ID:cjBx68eZMUGJbwsX1wgccPzBfpu-RfC?PsB70Hq3NSgPqnL8w3uITXbGKWrCDoi7J4zJC?f

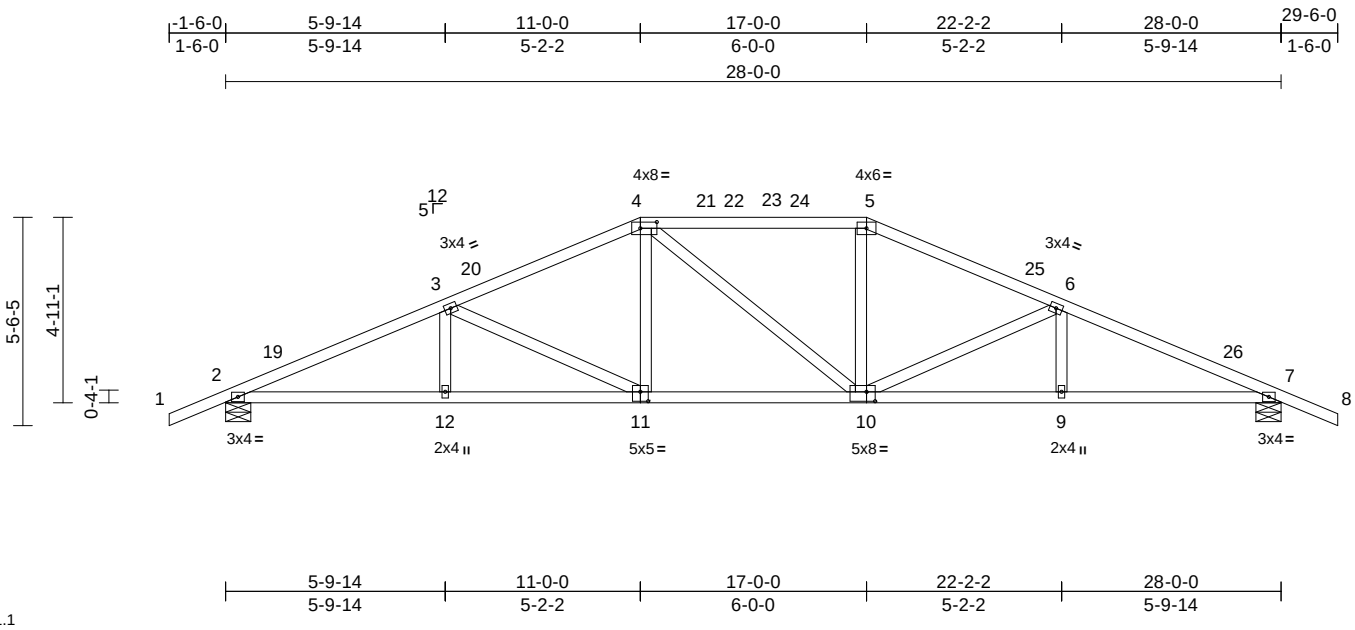

Scale = 1:61.1

Plate Offsets (X, Y): [4:0-5-4,0-2-0], [10:0-2-12,0-3-0], [11:0-2-8,0-3-0]

Loading	(psf)	Spacing	2-0-0	CSI		DEFL	in	(loc)	l/defl	L/d	PLATES	GRIP
TCLL (roof)	20.0	Plate Grip DOL	1.25	TC	0.42	Vert(LL)	-0.11	10-11	>999	240	MT20	244/190
TCDL	10.0	Lumber DOL	1.25	BC	0.57	Vert(CT)	-0.25	10-11	>999	180		
BCLL	0.0*	Rep Stress Incr	YES	WB	0.33	Horz(CT)	0.09	7	n/a	n/a		
BCDL	10.0	Code	FBC2023/TPI2014	Matrix-AS							Weight: 137 lb	FT = 20%

LUMBER
TOP CHORD 2x4 SP No.2
BOT CHORD 2x4 SP No.2
WEBS 2x4 SP No.2

BRACING
TOP CHORD Structural wood sheathing directly applied.
BOT CHORD Rigid ceiling directly applied.

REACTIONS (size) 2=0-8-0, 7=0-8-0
Max Horiz 2=77 (LC 11)
Max Uplift 2=-35 (LC 12), 7=-35 (LC 12)
Max Grav 2=1210 (LC 1), 7=1210 (LC 1)

FORCES (lb) - Maximum Compression/Maximum Tension
TOP CHORD 1-2=0/35, 2-3=-2370/99, 3-4=-1837/111, 4-5=-1639/123, 5-6=-1837/111, 6-7=-2370/99, 7-8=0/35
BOT CHORD 2-12=-26/2139, 9-12=-35/2139, 7-9=-35/2139
WEBS 3-12=0/215, 3-11=-557/52, 4-11=0/408, 4-10=-147/148, 5-10=0/408, 6-10=-556/53, 6-9=0/214

NOTES
1) Unbalanced roof live loads have been considered for this design.
2) Wind: ASCE 7-22; Vult=130mph (3-second gust) Vasd=101mph; TCDL=6.0psf; BCDL=6.0psf; h=15ft; B=45ft; L=28ft; eave=4ft; Cat. II; Exp B; Enclosed; MWFRS (directional) and C-C Zone3 -1-6-0 to 1-6-0, Zone1 1-6-0 to 11-0-0, Zone2 11-0-0 to 15-2-15, Zone1 15-2-15 to 17-0-0, Zone2 17-0-0 to 21-2-15, Zone1 21-2-15 to 29-6-0 zone; cantilever left and right exposed ; end vertical left and right exposed;C-C for members and forces & MWFRS for reactions shown; Lumber DOL=1.60 plate grip DOL=1.60
3) Building Designer / Project engineer responsible for verifying applied roof live load shown covers rain loading requirements specific to the use of this truss component.
4) Provide adequate drainage to prevent water ponding.
5) This truss has been designed for a 10.0 psf bottom chord live load nonconcurrent with any other live loads.
6) * This truss has been designed for a live load of 20.0psf on the bottom chord in all areas where a rectangle 3-06-00 tall by 2-00-00 wide will fit between the bottom chord and any other members.
7) Provide mechanical connection (by others) of truss to bearing plate capable of withstanding 35 lb uplift at joint 2 and 35 lb uplift at joint 7.
8) This truss design requires that a minimum of 7/16" structural wood sheathing be applied directly to the top chord and 1/2" gypsum sheetrock be applied directly to the bottom chord.

LOAD CASE(S) Standard

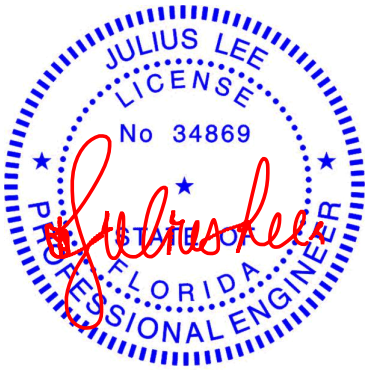

Julius Lee PE No. 34869
MiTek Inc. DBA MiTek USA FL Cert 6634
16023 Swingley Ridge Rd. Chesterfield, MO 63017
Date:

June 24,2026

WARNING - Verify design parameters and READ NOTES ON THIS AND INCLUDED MITEK REFERENCE PAGE MII-7473 rev. 1/2/2023 BEFORE USE.
Design valid for use only with MiTek® connectors. This design is based only upon parameters shown, and is for an individual building component, not a truss system. Before use, the building designer must verify the applicability of design parameters and properly incorporate this design into the overall building design. Bracing indicated is to prevent buckling of individual truss web and/or chord members only. Additional temporary and permanent bracing is always required for stability and to prevent collapse with possible personal injury and property damage. For general guidance regarding the fabrication, storage, delivery, erection and bracing of trusses and truss systems, see **ANSI/TPI1 Quality Criteria and DSB-22** available from Truss Plate Institute (www.tpinst.org) and **BCSI Building Component Safety Information** available from the Structural Building Component Association (www.sbcscomponents.com)

MiTek®
16023 Swingley Ridge Rd.
Chesterfield, MO 63017
314.434.1200 / MiTek-US.com

Job	Truss	Truss Type	Qty	Ply	AYOUB MARCUS
0526-048	A03A	Hip	1	1	T41656675 Job Reference (optional)

Mayo Truss Company, Inc., Mayo, FL - 32066, Run: 8.83 S Mar 11 2026 Print: 8.830 S Mar 11 2026 MiTek Industries, Inc. Tue Jun 23 15:45:07 Page: 1
ID:oqL5QumTnsfmPcCfAkMCYjzBfpj-RfC?PsB70Hq3NSgPqnL8w3uITXbGKWrCDoi7J4zJC?f

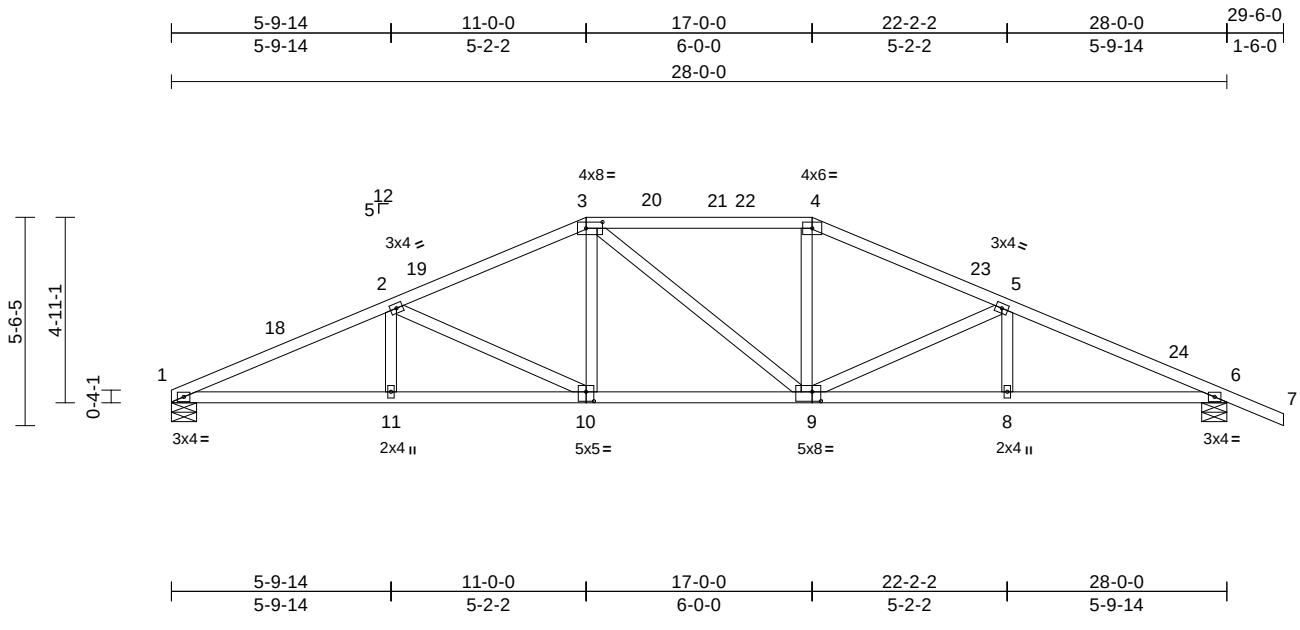

Scale = 1:61.1

Plate Offsets (X, Y): [3:0-5-4,0-2-0], [9:0-2-12,0-3-0], [10:0-2-8,0-3-0]

Loading	(psf)	Spacing	2-0-0	CSI		DEFL	in	(loc)	l/defl	L/d	PLATES	GRIP
TCLL (roof)	20.0	Plate Grip DOL	1.25	TC	0.42	Vert(LL)	-0.11	9-10	>999	240	MT20	244/190
TCDL	10.0	Lumber DOL	1.25	BC	0.61	Vert(CT)	-0.25	9-10	>999	180		
BCLL	0.0*	Rep Stress Incr	YES	WB	0.34	Horz(CT)	0.09	6	n/a	n/a		
BCDL	10.0	Code	FBC2023/TPI2014	Matrix-AS							Weight: 135 lb	FT = 20%

LUMBER
TOP CHORD 2x4 SP No.2
BOT CHORD 2x4 SP No.2
WEBS 2x4 SP No.2

BRACING
TOP CHORD Structural wood sheathing directly applied.
BOT CHORD Rigid ceiling directly applied.

REACTIONS (size) 1=0-8-0, 6=0-8-0
Max Horiz 1=-76 (LC 10)
Max Uplift 6=-36 (LC 12)
Max Grav 1=1118 (LC 1), 6=1212 (LC 1)

FORCES (lb) - Maximum Compression/Maximum Tension
TOP CHORD 1-2=-2387/104, 2-3=-1846/115, 3-4=-1645/128, 4-5=-1844/117, 5-6=-2376/104, 6-7=0/35
BOT CHORD 1-11=-32/2168, 8-11=-40/2168, 6-8=-40/2145
WEBS 2-11=0/218, 2-10=-580/57, 3-10=0/410, 3-9=-149/147, 4-9=0/408, 5-9=-556/52, 5-8=0/214

NOTES
1) Unbalanced roof live loads have been considered for this design.
2) Wind: ASCE 7-22; Vult=130mph (3-second gust) Vasd=101mph; TCDL=6.0psf; BCDL=6.0psf; h=15ft; B=45ft; L=28ft; eave=4ft; Cat. II; Exp B; Enclosed; MWFRS (directional) and C-C Zone3 0-0-0 to 3-0-0, Zone1 3-0-0 to 11-0-0, Zone2 11-0-0 to 15-2-15, Zone1 15-2-15 to 17-0-0, Zone2 17-0-0 to 21-2-15, Zone1 21-2-15 to 29-6-0 zone; cantilever left and right exposed ; end vertical left and right exposed;C-C for members and forces & MWFRS for reactions shown; Lumber DOL=1.60 plate grip DOL=1.60
3) Building Designer / Project engineer responsible for verifying applied roof live load shown covers rain loading requirements specific to the use of this truss component.
4) Provide adequate drainage to prevent water ponding.
5) This truss has been designed for a 10.0 psf bottom chord live load nonconcurrent with any other live loads.
6) * This truss has been designed for a live load of 20.0psf on the bottom chord in all areas where a rectangle 3-06-00 tall by 2-00-00 wide will fit between the bottom chord and any other members.
7) Provide mechanical connection (by others) of truss to bearing plate capable of withstanding 36 lb uplift at joint 6.
8) This truss design requires that a minimum of 7/16" structural wood sheathing be applied directly to the top chord and 1/2" gypsum sheetrock be applied directly to the bottom chord.

LOAD CASE(S) Standard

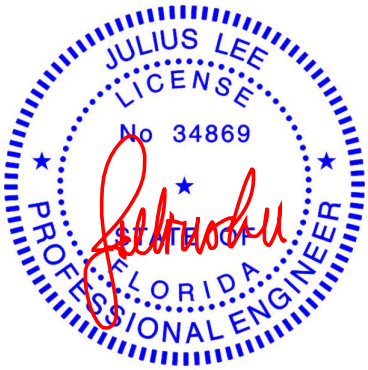

Julius Lee PE No. 34869
MiTek Inc. DBA MiTek USA FL Cert 6634
16023 Swingley Ridge Rd. Chesterfield, MO 63017
Date:

June 24,2026

WARNING - Verify design parameters and READ NOTES ON THIS AND INCLUDED MITEK REFERENCE PAGE MII-7473 rev. 1/2/2023 BEFORE USE.
Design valid for use only with MiTek® connectors. This design is based only upon parameters shown, and is for an individual building component, not a truss system. Before use, the building designer must verify the applicability of design parameters and properly incorporate this design into the overall building design. Bracing indicated is to prevent buckling of individual truss web and/or chord members only. Additional temporary and permanent bracing is always required for stability and to prevent collapse with possible personal injury and property damage. For general guidance regarding the fabrication, storage, delivery, erection and bracing of trusses and truss systems, see **ANSI/TPI1 Quality Criteria and DSB-22** available from Truss Plate Institute (www.tpinst.org) and **BCSI Building Component Safety Information** available from the Structural Building Component Association (www.sbcscomponents.com)

MiTek®
16023 Swingley Ridge Rd.
Chesterfield, MO 63017
314.434.1200 / MiTek-US.com

Job	Truss	Truss Type	Qty	Ply	AYOUB MARCUS
0526-048	A04	Hip	1	1	T41656676 Job Reference (optional)

Mayo Truss Company, Inc., Mayo, FL - 32066, Run: 8.83 S Mar 11 2026 Print: 8.830 S Mar 11 2026 MiTek Industries, Inc. Tue Jun 23 15:45:07 Page: 1
ID:ZeMYgR49uXoDvScS8UJ33?zBfpK-RfC?PsB70Hq3NSgPqnL8w3uITXbGKWrCDoi7J4zJC?f

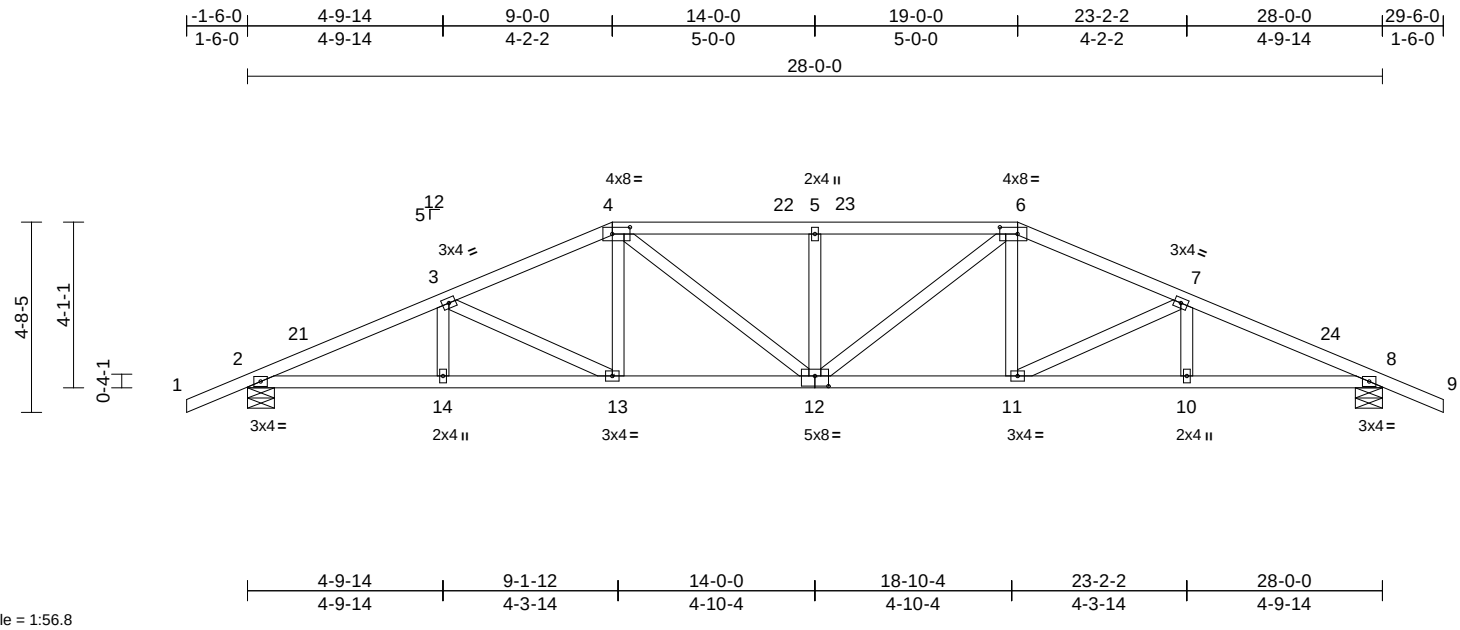

Scale = 1:56.8

Plate Offsets (X, Y): [4:0-5-4,0-2-0], [6:0-5-4,0-2-0], [12:0-4-0,0-3-0]

Loading	(psf)	Spacing	2-0-0	CSI		DEFL	in	(loc)	l/defl	L/d	PLATES	GRIP
TCLL (roof)	20.0	Plate Grip DOL	1.25	TC	0.26	Vert(LL)	-0.13	12	>999	240	MT20	244/190
TCDL	10.0	Lumber DOL	1.25	BC	0.52	Vert(CT)	-0.26	11-12	>999	180		
BCLL	0.0*	Rep Stress Incr	YES	WB	0.17	Horz(CT)	0.09	8	n/a	n/a		
BCDL	10.0	Code	FBC2023/TPI2014	Matrix-AS							Weight: 142 lb	FT = 20%

LUMBER
TOP CHORD 2x4 SP No.2
BOT CHORD 2x4 SP No.2
WEBS 2x4 SP No.2

BRACING
TOP CHORD Structural wood sheathing directly applied.
BOT CHORD Rigid ceiling directly applied.

REACTIONS (size) 2=0-8-0, 8=0-8-0
Max Horiz 2=65 (LC 11)
Max Uplift 2=-35 (LC 12), 8=-35 (LC 12)
Max Grav 2=1210 (LC 1), 8=1210 (LC 1)

FORCES (lb) - Maximum Compression/Maximum Tension
TOP CHORD 1-2=0/35, 2-3=-2416/93, 3-4=-2005/102, 4-5=-2090/117, 5-6=-2090/117, 6-7=-2005/102, 7-8=-2416/93, 8-9=0/35
BOT CHORD 2-14=-28/2189, 13-14=-28/2189, 11-13=0/1816, 10-11=-37/2189, 8-10=-37/2189
WEBS 3-13=-427/46, 4-13=0/329, 6-12=-18/444, 6-11=0/329, 7-11=-427/46, 3-14=0/170, 7-10=0/170, 5-12=-327/78, 4-12=-18/444

NOTES
1) Unbalanced roof live loads have been considered for this design.
2) Wind: ASCE 7-22; Vult=130mph (3-second gust) Vasd=101mph; TCDL=6.0psf; BCDL=6.0psf; h=15ft; B=45ft; L=28ft; eave=4ft; Cat. II; Exp B; Enclosed; MWFRS (directional) and C-C Zone3 -1-6-0 to 1-6-0, Zone1 1-6-0 to 9-0-0, Zone2 9-0-0 to 13-2-15, Zone1 13-2-15 to 19-0-0, Zone2 19-0-0 to 23-2-2, Zone1 23-2-2 to 29-6-0 zone; cantilever left and right exposed ; end vertical left and right exposed;C-C for members and forces & MWFRS for reactions shown; Lumber DOL=1.60 plate grip DOL=1.60
3) Building Designer / Project engineer responsible for verifying applied roof live load shown covers rain loading requirements specific to the use of this truss component.
4) Provide adequate drainage to prevent water ponding.
5) This truss has been designed for a 10.0 psf bottom chord live load nonconcurrent with any other live loads.
6) * This truss has been designed for a live load of 20.0psf on the bottom chord in all areas where a rectangle 3-06-00 tall by 2-00-00 wide will fit between the bottom chord and any other members.
7) Provide mechanical connection (by others) of truss to bearing plate capable of withstanding 35 lb uplift at joint 2 and 35 lb uplift at joint 8.
8) This truss design requires that a minimum of 7/16" structural wood sheathing be applied directly to the top chord and 1/2" gypsum sheetrock be applied directly to the bottom chord.

LOAD CASE(S) Standard

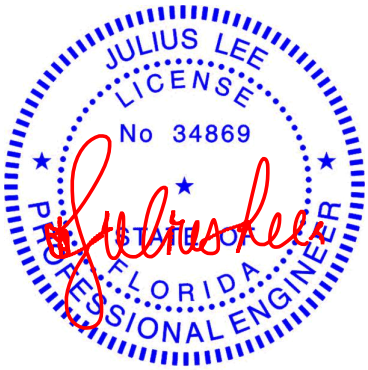

Julius Lee PE No. 34869
MiTek Inc. DBA MiTek USA FL Cert 6634
16023 Swingley Ridge Rd. Chesterfield, MO 63017
Date: June 24,2026

WARNING - Verify design parameters and READ NOTES ON THIS AND INCLUDED MITEK REFERENCE PAGE MII-7473 rev. 1/2/2023 BEFORE USE.
Design valid for use only with MiTek® connectors. This design is based only upon parameters shown, and is for an individual building component, not a truss system. Before use, the building designer must verify the applicability of design parameters and properly incorporate this design into the overall building design. Bracing indicated is to prevent buckling of individual truss web and/or chord members only. Additional temporary and permanent bracing is always required for stability and to prevent collapse with possible personal injury and property damage. For general guidance regarding the fabrication, storage, delivery, erection and bracing of trusses and truss systems, see **ANSI/TPI1 Quality Criteria and DSB-22** available from Truss Plate Institute (www.tpinst.org) and **BCSI Building Component Safety Information** available from the Structural Building Component Association (www.sbcscomponents.com)

MiTek®
16023 Swingley Ridge Rd.
Chesterfield, MO 63017
314.434.1200 / MiTek-US.com

Job	Truss	Truss Type	Qty	Ply	AYOUB MARCUS
0526-048	A04A	Hip	1	1	T41656677 Job Reference (optional)

Mayo Truss Company, Inc., Mayo, FL - 32066, Run: 8.83 S Mar 11 2026 Print: 8.830 S Mar 11 2026 MiTek Industries, Inc. Tue Jun 23 15:45:07 Page: 1
ID:ZwtzEFHpumxoS3PjeZ62FazBfp3-RfC?PsB70Hq3NSgPqnL8w3uITXbGKWrCDoi7J4zJC?f

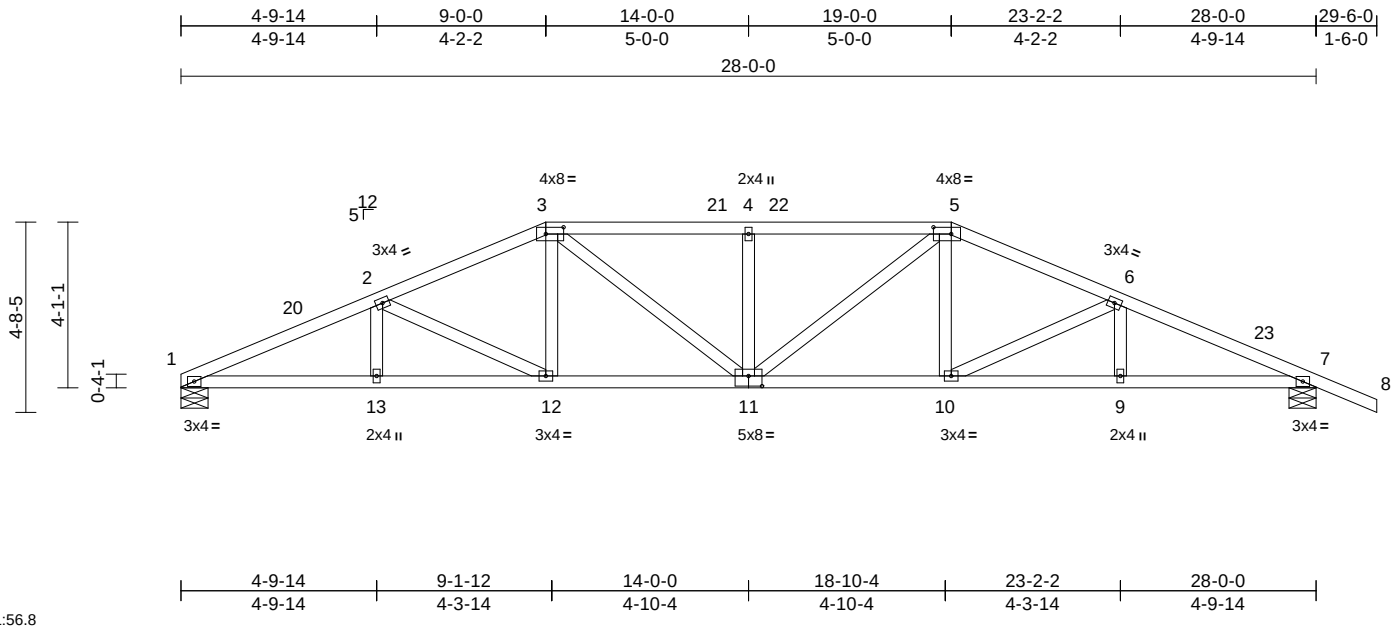

Scale = 1:56.8

Plate Offsets (X, Y): [3:0-5-4,0-2-0], [5:0-5-4,0-2-0], [11:0-4-0,0-3-0]

Loading	(psf)	Spacing	2-0-0	CSI		DEFL	in	(loc)	l/defl	L/d	PLATES	GRIP
TCLL (roof)	20.0	Plate Grip DOL	1.25	TC	0.27	Vert(LL)	-0.13	11	>999	240	MT20	244/190
TCDL	10.0	Lumber DOL	1.25	BC	0.56	Vert(CT)	-0.26	11-12	>999	180		
BCLL	0.0*	Rep Stress Incr	YES	WB	0.18	Horz(CT)	0.09	7	n/a	n/a		
BCDL	10.0	Code	FBC2023/TPI2014	Matrix-AS							Weight: 139 lb	FT = 20%

LUMBER
TOP CHORD 2x4 SP No.2
BOT CHORD 2x4 SP No.2
WEBS 2x4 SP No.2

BRACING
TOP CHORD Structural wood sheathing directly applied.
BOT CHORD Rigid ceiling directly applied.

REACTIONS (size) 1=0-8-0, 7=0-8-0
Max Horiz 1=-64 (LC 10)
Max Uplift 7=-36 (LC 12)
Max Grav 1=1118 (LC 1), 7=1212 (LC 1)

FORCES (lb) - Maximum Compression/Maximum Tension
TOP CHORD 1-2=-2442/102, 2-3=-2018/111, 3-4=-2099/125, 4-5=-2099/125, 5-6=-2011/108, 6-7=-2422/99, 7-8=0/35
BOT CHORD 1-13=-37/2224, 12-13=-37/2224, 10-12=0/1827, 9-10=-43/2194, 7-9=-43/2194
WEBS 2-12=-455/51, 3-12=0/332, 5-11=-19/448, 5-10=0/329, 6-10=-427/46, 2-13=0/174, 4-11=-328/78, 3-11=-16/443, 6-9=0/170

NOTES
1) Unbalanced roof live loads have been considered for this design.
2) Wind: ASCE 7-22; Vult=130mph (3-second gust) Vasd=101mph; TCDL=6.0psf; BCDL=6.0psf; h=15ft; B=45ft; L=28ft; eave=4ft; Cat. II; Exp B; Enclosed; MWFRS (directional) and C-C Zone3 0-0-0 to 3-0-0, Zone1 3-0-0 to 9-0-0, Zone2 9-0-0 to 13-2-15, Zone1 13-2-15 to 19-0-0, Zone2 19-0-0 to 23-2-2, Zone1 23-2-2 to 29-6-0 zone; cantilever left and right exposed ; end vertical left and right exposed;C-C for members and forces & MWFRS for reactions shown; Lumber DOL=1.60 plate grip DOL=1.60
3) Building Designer / Project engineer responsible for verifying applied roof live load shown covers rain loading requirements specific to the use of this truss component.
4) Provide adequate drainage to prevent water ponding.
5) This truss has been designed for a 10.0 psf bottom chord live load nonconcurrent with any other live loads.
6) * This truss has been designed for a live load of 20.0psf on the bottom chord in all areas where a rectangle 3-06-00 tall by 2-00-00 wide will fit between the bottom chord and any other members.
7) Provide mechanical connection (by others) of truss to bearing plate capable of withstanding 36 lb uplift at joint 7.
8) This truss design requires that a minimum of 7/16" structural wood sheathing be applied directly to the top chord and 1/2" gypsum sheetrock be applied directly to the bottom chord.

LOAD CASE(S) Standard

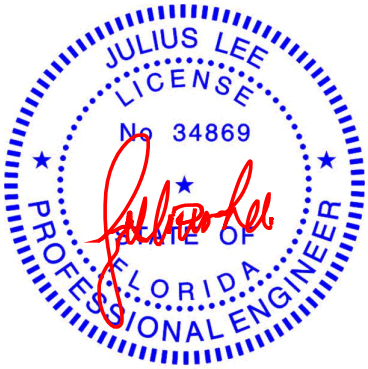

Julius Lee PE No. 34869
MiTek Inc. DBA MiTek USA FL Cert 6634
16023 Swingley Ridge Rd. Chesterfield, MO 63017
Date:

June 24,2026

WARNING - Verify design parameters and READ NOTES ON THIS AND INCLUDED MITEK REFERENCE PAGE MII-7473 rev. 1/2/2023 BEFORE USE.
Design valid for use only with MiTek® connectors. This design is based only upon parameters shown, and is for an individual building component, not a truss system. Before use, the building designer must verify the applicability of design parameters and properly incorporate this design into the overall building design. Bracing indicated is to prevent buckling of individual truss web and/or chord members only. Additional temporary and permanent bracing is always required for stability and to prevent collapse with possible personal injury and property damage. For general guidance regarding the fabrication, storage, delivery, erection and bracing of trusses and truss systems, see **ANSI/TPI1 Quality Criteria and DSB-22** available from Truss Plate Institute (www.tpinst.org) and **BCSI Building Component Safety Information** available from the Structural Building Component Association (www.sbcscomponents.com)

MiTek®
16023 Swingley Ridge Rd.
Chesterfield, MO 63017
314.434.1200 / MiTek-US.com

Job	Truss	Truss Type	Qty	Ply	AYOUB MARCUS
0526-048	A05	Hip Girder	1	2	T41656678 Job Reference (optional)

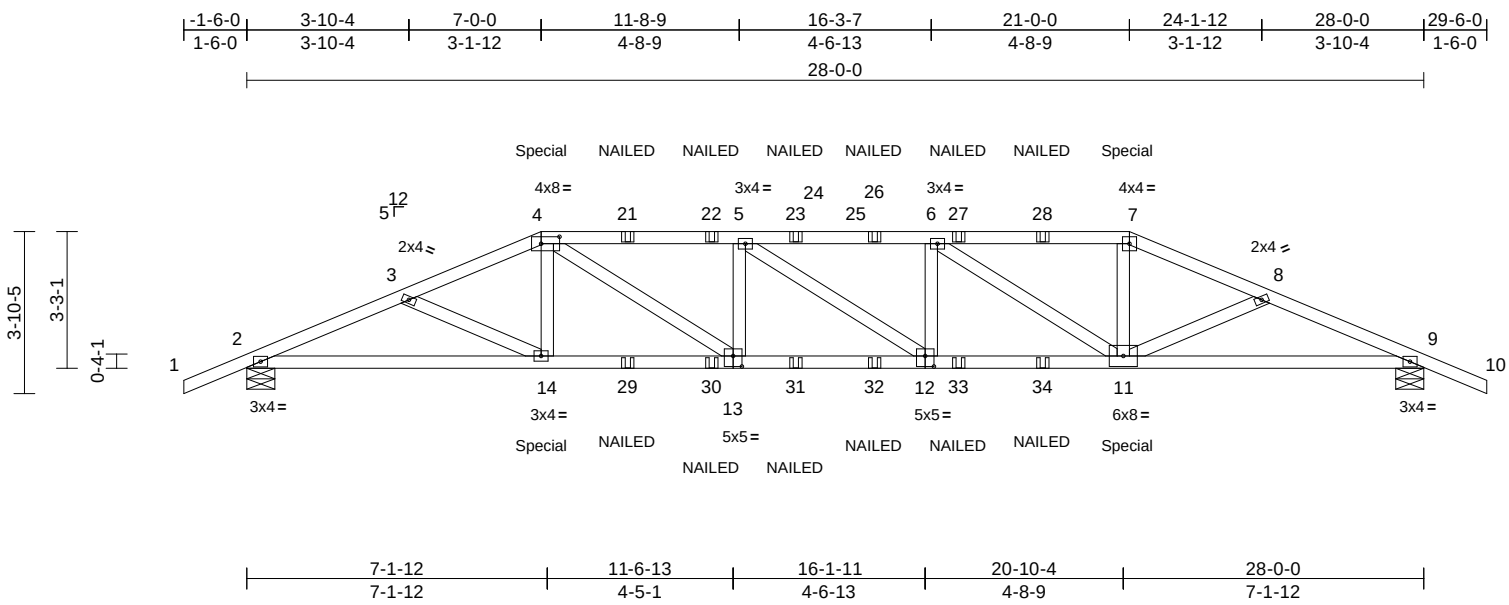

Scale = 1:54.8

Plate Offsets (X, Y): [4:0-5-4,0-2-0], [12:0-2-8,0-3-0], [13:0-2-8,0-3-0]

Loading	(psf)	Spacing	2-0-0	CSI		DEFL	in	(loc)	l/defl	L/d	PLATES	GRIP
TCLL (roof)	20.0	Plate Grip DOL	1.25	TC	0.50	Vert(LL)	-0.19	12-13	>999	240	MT20	244/190
TCDL	10.0	Lumber DOL	1.25	BC	0.80	Vert(CT)	-0.39	12-13	>862	180		
BCLL	0.0*	Rep Stress Incr	NO	WB	0.18	Horz(CT)	0.11	9	n/a	n/a		
BCDL	10.0	Code	FBC2023/TPI2014	Matrix-MS							Weight: 278 lb	FT = 20%

LUMBER
TOP CHORD 2x4 SP No.2
BOT CHORD 2x4 SP No.2
WEBS 2x4 SP No.2

BRACING
TOP CHORD Structural wood sheathing directly applied or 4-7-5 oc purlins.
BOT CHORD Rigid ceiling directly applied or 10-0-0 oc bracing.

REACTIONS (size) 2=0-8-0, 9=0-8-0
Max Horiz 2=-53 (LC 6)
Max Grav 2=2324 (LC 1), 9=2324 (LC 1)

FORCES (lb) - Maximum Compression/Maximum Tension
TOP CHORD 1-2=0/35, 2-3=-5221/0, 3-4=-5039/0, 4-5=-5947/0, 5-6=-5990/0, 6-7=-4705/0, 7-8=-5041/0, 8-9=-5220/0, 9-10=0/35
BOT CHORD 2-14=0/4772, 11-14=0/5978, 9-11=0/4771
WEBS 4-14=0/658, 7-11=0/1424, 3-14=-154/116, 8-11=-150/119, 6-11=-1561/14, 5-13=-626/118, 4-13=-7/1577, 5-12=-22/53, 6-12=0/366

NOTES
1) 2-ply truss to be connected together with 10d (0.131"x3") nails as follows:
Top chords connected as follows: 2x4 - 1 row at 0-9-0 oc.
Bottom chords connected as follows: 2x4 - 1 row at 0-9-0 oc.
Web connected as follows: 2x4 - 1 row at 0-9-0 oc.
2) All loads are considered equally applied to all plies, except if noted as front (F) or back (B) face in the LOAD CASE(S) section. Ply to ply connections have been provided to distribute only loads noted as (F) or (B), unless otherwise indicated.
3) Unbalanced roof live loads have been considered for this design.
4) Wind: ASCE 7-22; Vult=130mph (3-second gust) Vasd=101mph; TCDL=6.0psf; BCDL=6.0psf; h=15ft; B=45ft; L=28ft; eave=4ft; Cat. II; Exp B; Enclosed; MWFRS (directional); cantilever left and right exposed ; end vertical left and right exposed; Lumber DOL=1.60 plate grip DOL=1.60
5) Building Designer / Project engineer responsible for verifying applied roof live load shown covers rain loading requirements specific to the use of this truss component.
6) Provide adequate drainage to prevent water ponding.
7) This truss has been designed for a 10.0 psf bottom chord live load nonconcurrent with any other live loads.
8) * This truss has been designed for a live load of 20.0psf on the bottom chord in all areas where a rectangle 3-06-00 tall by 2-00-00 wide will fit between the bottom chord and any other members.
9) "NAILED" indicates 3-10d (0.148"x3") or 3-12d (0.148"x3.25") toe-nails per NDS guidlines.
10) Hanger(s) or other connection device(s) shall be provided sufficient to support concentrated load(s) 223 lb down and 73 lb up at 7-0-0, and 223 lb down and 73 lb up at 21-0-0 on top chord, and 374 lb down at 7-0-0, and 374 lb down at 20-11-4 on bottom chord. The design/selection of such connection device(s) is the responsibility of others.

LOAD CASE(S) Standard
1) Dead + Roof Live (balanced): Lumber Increase=1.25, Plate Increase=1.25
Uniform Loads (lb/ft)
Vert: 1-4=-60, 4-7=-60, 7-10=-60, 15-18=-20
Concentrated Loads (lb)
Vert: 4=-176 (F), 7=-176 (F), 14=-374 (F), 11=-374 (F), 21=-125 (F), 22=-125 (F), 23=-125 (F), 26=-125 (F), 27=-125 (F), 28=-125 (F), 29=-63 (F), 30=-63 (F), 31=-63 (F), 32=-63 (F), 33=-63 (F), 34=-63 (F)

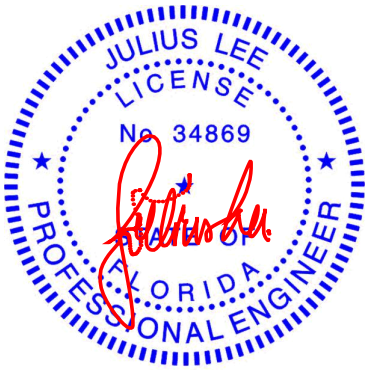

Julius Lee PE No. 34869
MiTek Inc. DBA MiTek USA FL Cert 6634
16023 Swingley Ridge Rd. Chesterfield, MO 63017
Date:

June 24,2026

WARNING - Verify design parameters and READ NOTES ON THIS AND INCLUDED MITEK REFERENCE PAGE MII-7473 rev. 1/2/2023 BEFORE USE.
Design valid for use only with MiTek® connectors. This design is based only upon parameters shown, and is for an individual building component, not a truss system. Before use, the building designer must verify the applicability of design parameters and properly incorporate this design into the overall building design. Bracing indicated is to prevent buckling of individual truss web and/or chord members only. Additional temporary and permanent bracing is always required for stability and to prevent collapse with possible personal injury and property damage. For general guidance regarding the fabrication, storage, delivery, erection and bracing of trusses and truss systems, see **ANSI/TPI1 Quality Criteria and DSB-22** available from Truss Plate Institute (www.tpinst.org) and **BCSI Building Component Safety Information** available from the Structural Building Component Association (www.sbcscomponents.com)

MiTek®
16023 Swingley Ridge Rd.
Chesterfield, MO 63017
314.434.1200 / MiTek-US.com

Job	Truss	Truss Type	Qty	Ply	AYOUB MARCUS
0526-048	A05A	Hip Girder	1	2	T41656679 Job Reference (optional)

Mayo Truss Company, Inc., Mayo, FL - 32066, Run: 8.83 S Mar 11 2026 Print: 8.830 S Mar 11 2026 MiTek Industries, Inc. Tue Jun 23 15:45:08 Page: 1
ID:5XvtkMuA67FiSlEKZ30mH7zBfoH-RfC?PsB70Hq3NSgPqnL8w3uITXbGKWrCDoi7J4zJC?f

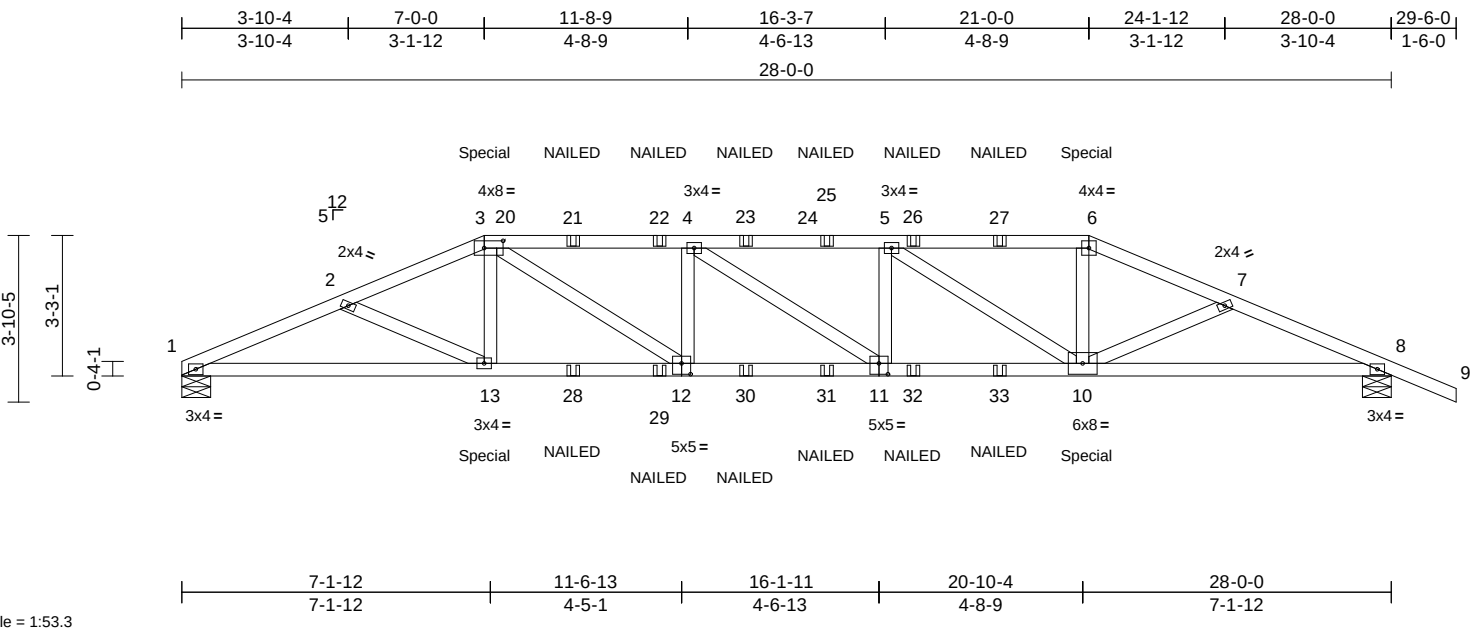

Scale = 1:53.3

Plate Offsets (X, Y): [3:0-5-4,0-2-0], [11:0-2-8,0-3-0], [12:0-2-8,0-3-0]

Loading	(psf)	Spacing	2-0-0	CSI		DEFL	in	(loc)	l/defl	L/d	PLATES	GRIP
TCLL (roof)	20.0	Plate Grip DOL	1.25	TC	0.50	Vert(LL)	-0.19	11-12	>999	240	MT20	244/190
TCDL	10.0	Lumber DOL	1.25	BC	0.80	Vert(CT)	-0.39	11-12	>859	180		
BCLL	0.0*	Rep Stress Incr	NO	WB	0.18	Horz(CT)	0.11	8	n/a	n/a		
BCDL	10.0	Code	FBC2023/TPI2014	Matrix-MS							Weight: 273 lb	FT = 20%

LUMBER
TOP CHORD 2x4 SP No.2
BOT CHORD 2x4 SP No.2
WEBS 2x4 SP No.2

BRACING
TOP CHORD Structural wood sheathing directly applied or 4-7-3 oc purlins.
BOT CHORD Rigid ceiling directly applied or 10-0-0 oc bracing.

REACTIONS (size) 1=0-8-0, 8=0-8-0
Max Horiz 1=-52 (LC 6)
Max Grav 1=2231 (LC 1), 8=2326 (LC 1)

FORCES (lb) - Maximum Compression/Maximum Tension
TOP CHORD 1-2=-5258/0, 2-3=-5060/0, 3-4=-5960/0, 4-5=-5999/0, 5-6=-4711/0, 6-7=-5047/0, 7-8=-5226/0, 8-9=0/35
BOT CHORD 1-13=0/4812, 10-13=0/5990, 8-10=0/4776
WEBS 3-13=0/663, 6-10=0/1427, 2-13=-178/128, 7-10=-150/119, 5-10=-1566/16, 4-12=-626/117, 3-12=-3/1574, 4-11=-26/52, 5-11=0/367

NOTES
1) 2-ply truss to be connected together with 10d (0.131"x3") nails as follows:
Top chords connected as follows: 2x4 - 1 row at 0-9-0 oc.
Bottom chords connected as follows: 2x4 - 1 row at 0-9-0 oc.
Web connected as follows: 2x4 - 1 row at 0-9-0 oc.
2) All loads are considered equally applied to all plies, except if noted as front (F) or back (B) face in the LOAD CASE(S) section. Ply to ply connections have been provided to distribute only loads noted as (F) or (B), unless otherwise indicated.
3) Unbalanced roof live loads have been considered for this design.
4) Wind: ASCE 7-22; Vult=130mph (3-second gust) Vasd=101mph; TCDL=6.0psf; BCDL=6.0psf; h=15ft; B=45ft; L=28ft; eave=4ft; Cat. II; Exp B; Enclosed; MWFRS (directional); cantilever left and right exposed ; end vertical left and right exposed; Lumber DOL=1.60 plate grip DOL=1.60
5) Building Designer / Project engineer responsible for verifying applied roof live load shown covers rain loading requirements specific to the use of this truss component.
6) Provide adequate drainage to prevent water ponding.
7) This truss has been designed for a 10.0 psf bottom chord live load nonconcurrent with any other live loads.
8) * This truss has been designed for a live load of 20.0psf on the bottom chord in all areas where a rectangle 3-06-00 tall by 2-00-00 wide will fit between the bottom chord and any other members.
9) "NAILED" indicates 3-10d (0.148"x3") or 3-12d (0.148"x3.25") toe-nails per NDS guidlines.
10) Hanger(s) or other connection device(s) shall be provided sufficient to support concentrated load(s) 223 lb down and 73 lb up at 7-0-0, and 223 lb down and 73 lb up at 21-0-0 on top chord, and 374 lb down at 7-0-0, and 374 lb down at 20-11-4 on bottom chord. The design/selection of such connection device(s) is the responsibility of others.

LOAD CASE(S) Standard
1) Dead + Roof Live (balanced): Lumber Increase=1.25, Plate Increase=1.25
Uniform Loads (lb/ft)
Vert: 1-3=-60, 3-6=-60, 6-9=-60, 14-17=-20
Concentrated Loads (lb)
Vert: 3=-176 (F), 6=-176 (F), 13=-374 (F), 10=-374 (F), 21=-125 (F), 22=-125 (F), 23=-125 (F), 25=-125 (F), 26=-125 (F), 27=-125 (F), 28=-63 (F), 29=-63 (F), 30=-63 (F), 31=-63 (F), 32=-63 (F), 33=-63 (F)

Julius Lee PE No. 34869
MiTek Inc. DBA MiTek USA FL Cert 6634
16023 Swingley Ridge Rd. Chesterfield, MO 63017
Date:

June 24,2026

WARNING - Verify design parameters and READ NOTES ON THIS AND INCLUDED MITEK REFERENCE PAGE MII-7473 rev. 1/2/2023 BEFORE USE.
Design valid for use only with MiTek® connectors. This design is based only upon parameters shown, and is for an individual building component, not a truss system. Before use, the building designer must verify the applicability of design parameters and properly incorporate this design into the overall building design. Bracing indicated is to prevent buckling of individual truss web and/or chord members only. Additional temporary and permanent bracing is always required for stability and to prevent collapse with possible personal injury and property damage. For general guidance regarding the fabrication, storage, delivery, erection and bracing of trusses and truss systems, see **ANSI/TPI1 Quality Criteria and DSB-22** available from Truss Plate Institute (www.tpinst.org) and **BCSI Building Component Safety Information** available from the Structural Building Component Association (www.sbcscomponents.com)

MiTek®
16023 Swingley Ridge Rd.
Chesterfield, MO 63017
314.434.1200 / MiTek-US.com

Job	Truss	Truss Type	Qty	Ply	AYOUB MARCUS
0526-048	B01	Common	2	1	T41656680 Job Reference (optional)

Mayo Truss Company, Inc., Mayo, FL - 32066, Run: 8.83 S Mar 11 2026 Print: 8.830 S Mar 11 2026 MiTek Industries, Inc. Tue Jun 23 15:45:09 Page: 1

ID:64yjt_lV6ZXtXzqtZCdlfIzBfnl-RfC?PsB70Hq3NSgPqnL8w3uITXbGKWrCDoi7J4zJC?f

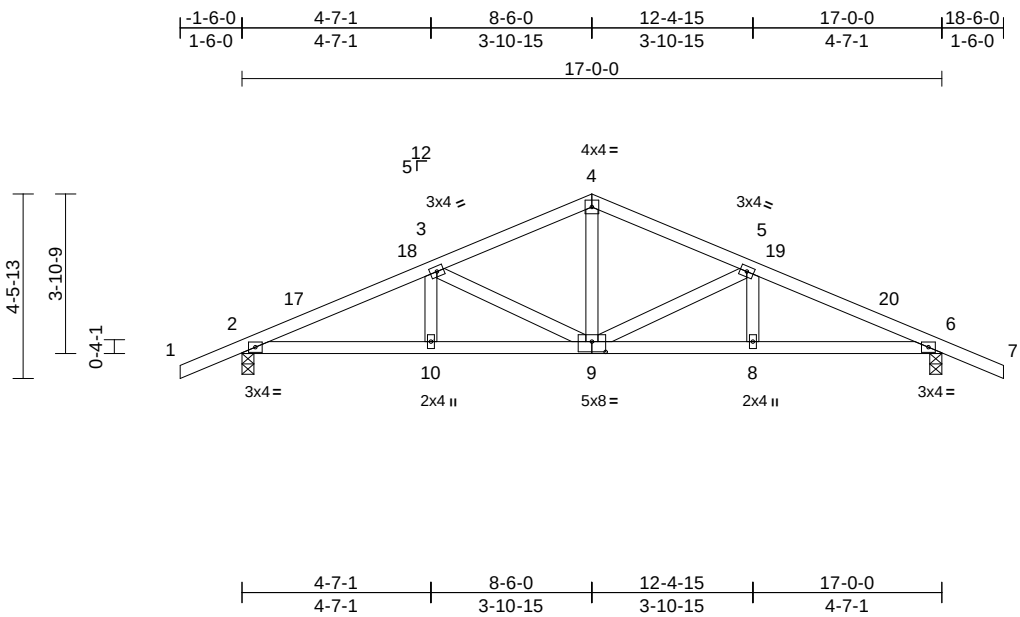

Scale = 1:56

Plate Offsets (X, Y): [9:0-4-0,0-3-0]

Loading	(psf)	Spacing	2-0-0	CSI		DEFL	in	(loc)	l/defl	L/d	PLATES	GRIP
TCLL (roof)	20.0	Plate Grip DOL	1.25	TC	0.16	Vert(LL)	-0.04	9	>999	240	MT20	244/190
TCDL	10.0	Lumber DOL	1.25	BC	0.32	Vert(CT)	-0.08	9-10	>999	180		
BCLL	0.0*	Rep Stress Incr	YES	WB	0.14	Horz(CT)	0.03	6	n/a	n/a		
BCDL	10.0	Code	FBC2023/TPI2014	Matrix-AS							Weight: 80 lb	FT = 20%

LUMBER

TOP CHORD 2x4 SP No.2
BOT CHORD 2x4 SP No.2
WEBS 2x4 SP No.2

BRACING

TOP CHORD Structural wood sheathing directly applied.
BOT CHORD Rigid ceiling directly applied.

REACTIONS (size) 2=0-3-8, 6=0-3-8
Max Horiz 2=-59 (LC 10)
Max Uplift 2=-115 (LC 12), 6=-115 (LC 12)
Max Grav 2=770 (LC 1), 6=770 (LC 1)

FORCES (lb) - Maximum Compression/Maximum Tension
TOP CHORD 1-2=0/35, 2-3=-1322/285, 3-4=-927/235, 4-5=-927/235, 5-6=-1322/285, 6-7=0/35
BOT CHORD 2-10=-184/1186, 8-10=-200/1186, 6-8=-200/1183
WEBS 3-10=0/168, 3-9=-441/137, 4-9=-62/451, 5-9=-442/137, 5-8=0/168

NOTES

1) Unbalanced roof live loads have been considered for this design.
2) Wind: ASCE 7-22; Vult=130mph (3-second gust) Vasd=101mph; TCDL=6.0psf; BCDL=6.0psf; h=15ft; B=45ft; L=24ft; eave=4ft; Cat. II; Exp B; Partially Enclosed; MWFRS (directional) and C-C Zone3 -1-6-0 to 1-6-0, Zone1 1-6-0 to 8-6-0, Zone2 8-6-0 to 12-8-15, Zone1 12-8-15 to 18-6-0 zone; cantilever left and right exposed ; end vertical left and right exposed;C-C for members and forces & MWFRS for reactions shown; Lumber DOL=1.60 plate grip DOL=1.60
3) Building Designer / Project engineer responsible for verifying applied roof live load shown covers rain loading requirements specific to the use of this truss component.
4) This truss has been designed for a 10.0 psf bottom chord live load nonconcurrent with any other live loads.
5) * This truss has been designed for a live load of 20.0psf on the bottom chord in all areas where a rectangle 3-06-00 tall by 2-00-00 wide will fit between the bottom chord and any other members.
6) Provide mechanical connection (by others) of truss to bearing plate capable of withstanding 115 lb uplift at joint 2 and 115 lb uplift at joint 6.
7) This truss design requires that a minimum of 7/16" structural wood sheathing be applied directly to the top chord and 1/2" gypsum sheetrock be applied directly to the bottom chord.

LOAD CASE(S) Standard

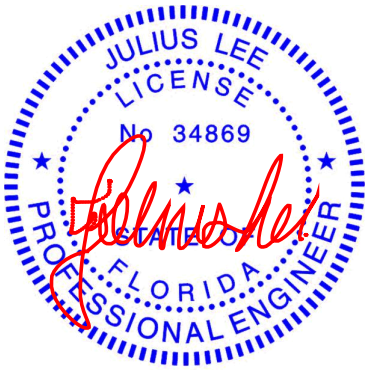

Julius Lee PE No. 34869
MiTek Inc. DBA MiTek USA FL Cert 6634
16023 Swingley Ridge Rd. Chesterfield, MO 63017
Date:

June 24,2026

WARNING - Verify design parameters and READ NOTES ON THIS AND INCLUDED MITEK REFERENCE PAGE MII-7473 rev. 1/2/2023 BEFORE USE.

Design valid for use only with MiTek® connectors. This design is based only upon parameters shown, and is for an individual building component, not a truss system. Before use, the building designer must verify the applicability of design parameters and properly incorporate this design into the overall building design. Bracing indicated is to prevent buckling of individual truss web and/or chord members only. Additional temporary and permanent bracing is always required for stability and to prevent collapse with possible personal injury and property damage. For general guidance regarding the fabrication, storage, delivery, erection and bracing of trusses and truss systems, see **ANSI/TPI1 Quality Criteria and DSB-22** available from Truss Plate Institute (www.tpinst.org) and **BCSI Building Component Safety Information** available from the Structural Building Component Association (www.sbcscomponents.com)

MiTek®
16023 Swingley Ridge Rd.
Chesterfield, MO 63017
314.434.1200 / MiTek-US.com

Job	Truss	Truss Type	Qty	Ply	AYOUB MARCUS
0526-048	B02	Hip Girder	1	1	T41656681 Job Reference (optional)

Mayo Truss Company, Inc., Mayo, FL - 32066, Run: 8.83 S Mar 11 2026 Print: 8.830 S Mar 11 2026 MiTek Industries, Inc. Tue Jun 23 15:45:09 Page: 1
ID:6i7HHsXU4vNPmedTXdSfopzBfm9-RfC?PsB70Hq3NSgPqnL8w3uITXbGKWrCDoi7J4zJC?f

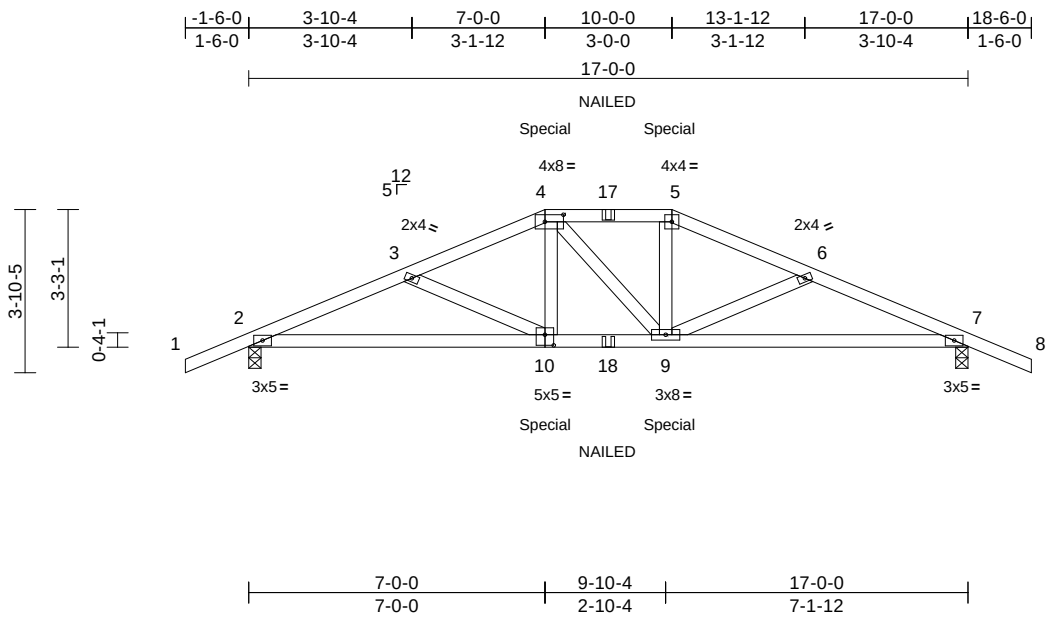

Scale = 1:54.5

Plate Offsets (X, Y): [4:0-5-4,0-2-0], [10:0-2-8,0-3-0]

Loading	(psf)	Spacing	2-0-0	CSI		DEFL	in	(loc)	l/defl	L/d	PLATES	GRIP
TCLL (roof)	20.0	Plate Grip DOL	1.25	TC	0.41	Vert(LL)	-0.09	9-10	>999	240	MT20	244/190
TCDL	10.0	Lumber DOL	1.25	BC	0.80	Vert(CT)	-0.19	9-16	>999	180		
BCLL	0.0*	Rep Stress Incr	NO	WB	0.14	Horz(CT)	0.07	7	n/a	n/a		
BCDL	10.0	Code	FBC2023/TPI2014	Matrix-MS							Weight: 81 lb	FT = 20%

LUMBER
TOP CHORD 2x4 SP No.2
BOT CHORD 2x4 SP No.2
WEBS 2x4 SP No.2

BRACING
TOP CHORD Structural wood sheathing directly applied or 3-3-4 oc purlins.
BOT CHORD Rigid ceiling directly applied or 10-0-0 oc bracing.

REACTIONS (size) 2=0-3-8, 7=0-3-8
Max Horiz 2=-50 (LC 6)
Max Uplift 2=-203 (LC 8), 7=-203 (LC 8)
Max Grav 2=1463 (LC 13), 7=1456 (LC 14)

FORCES (lb) - Maximum Compression/Maximum Tension
TOP CHORD 1-2=0/35, 2-3=-3092/397, 3-4=-2871/358, 4-5=-2643/345, 5-6=-2848/357, 6-7=-3073/397, 7-8=0/35
BOT CHORD 2-9=-301/2859, 7-9=-301/2805
WEBS 4-10=0/641, 4-9=-42/69, 5-9=0/632, 3-10=-249/144, 6-9=-252/146

NOTES
1) Unbalanced roof live loads have been considered for this design.
2) Wind: ASCE 7-22; Vult=130mph (3-second gust) Vasd=101mph; TCDL=6.0psf; BCDL=6.0psf; h=15ft; B=45ft; L=24ft; eave=4ft; Cat. II; Exp B; Partially Enclosed; MWFRS (directional); cantilever left and right exposed ; end vertical left and right exposed; Lumber DOL=1.60 plate grip DOL=1.60
3) Building Designer / Project engineer responsible for verifying applied roof live load shown covers rain loading requirements specific to the use of this truss component.
4) Provide adequate drainage to prevent water ponding.
5) This truss has been designed for a 10.0 psf bottom chord live load nonconcurrent with any other live loads.
6) * This truss has been designed for a live load of 20.0psf on the bottom chord in all areas where a rectangle 3-06-00 tall by 2-00-00 wide will fit between the bottom chord and any other members.
7) Provide mechanical connection (by others) of truss to bearing plate capable of withstanding 203 lb uplift at joint 2 and 203 lb uplift at joint 7.
8) "NAILED" indicates 3-10d (0.148"x3") or 3-12d (0.148"x3.25") toe-nails per NDS guidlines.
9) Hanger(s) or other connection device(s) shall be provided sufficient to support concentrated load(s) 261 lb down and 104 lb up at 7-0-0, and 261 lb down and 104 lb up at 10-0-0 on top chord, and 413 lb down and 4 lb up at 7-0-0, and 413 lb down and 4 lb up at 9-11-4 on bottom chord. The design/selection of such connection device(s) is the responsibility of others.
10) In the LOAD CASE(S) section, loads applied to the face of the truss are noted as front (F) or back (B).

LOAD CASE(S) Standard
1) Dead + Roof Live (balanced): Lumber Increase=1.25, Plate Increase=1.25
Uniform Loads (lb/ft)
Vert: 1-4=-60, 4-5=-60, 5-8=-60, 11-14=-20
Concentrated Loads (lb)
Vert: 4=-176 (F), 5=-176 (F), 10=-374 (F), 9=-374 (F), 17=-125 (F), 18=-63 (F)

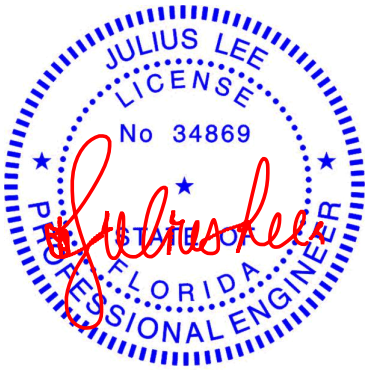

Julius Lee PE No. 34869
MiTek Inc. DBA MiTek USA FL Cert 6634
16023 Swingley Ridge Rd. Chesterfield, MO 63017
Date:

June 24,2026

WARNING - Verify design parameters and READ NOTES ON THIS AND INCLUDED MITEK REFERENCE PAGE MII-7473 rev. 1/2/2023 BEFORE USE.
Design valid for use only with MiTek® connectors. This design is based only upon parameters shown, and is for an individual building component, not a truss system. Before use, the building designer must verify the applicability of design parameters and properly incorporate this design into the overall building design. Bracing indicated is to prevent buckling of individual truss web and/or chord members only. Additional temporary and permanent bracing is always required for stability and to prevent collapse with possible personal injury and property damage. For general guidance regarding the fabrication, storage, delivery, erection and bracing of trusses and truss systems, see **ANSI/TPI1 Quality Criteria and DSB-22** available from Truss Plate Institute (www.tpinst.org) and **BCSI Building Component Safety Information** available from the Structural Building Component Association (www.sbcscomponents.com)

MiTek®
16023 Swingley Ridge Rd.
Chesterfield, MO 63017
314.434.1200 / MiTek-US.com

Job	Truss	Truss Type	Qty	Ply	AYOUB MARCUS
0526-048	CJ01	Diagonal Hip Girder	4	1	T41656682 Job Reference (optional)

Mayo Truss Company, Inc., Mayo, FL - 32066,

Run: 8.83 S Mar 11 2026 Print: 8.830 S Mar 11 2026 MiTek Industries, Inc. Tue Jun 23 15:45:09 Page: 1
ID:OLmf37ZETqrXibg8Uu1RhRzBfoi-RfC?PsB70Hq3NSgPqnL8w3uITXbGKWrCDoi7J4zJC?f

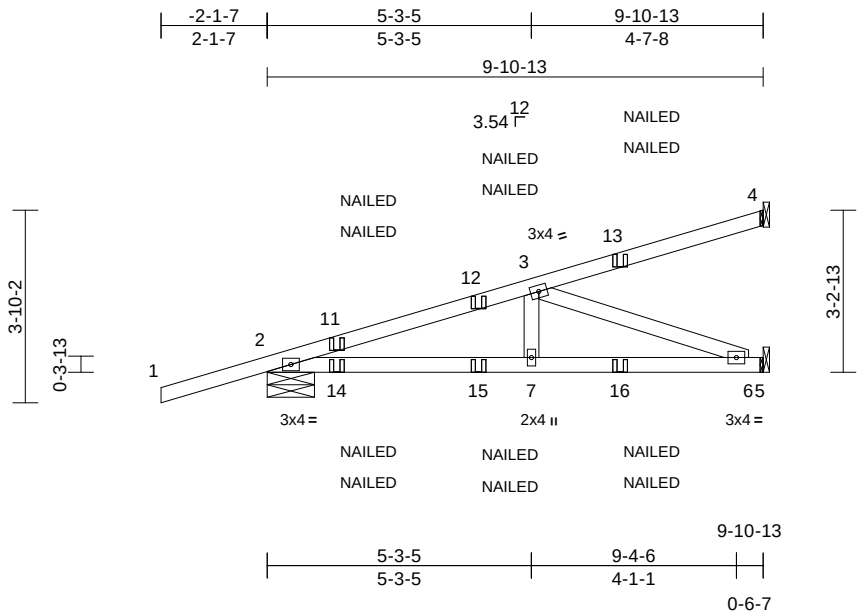

Scale = 1:46

Loading	(psf)	Spacing	2-0-0	CSI		DEFL	in	(loc)	l/defl	L/d	PLATES	GRIP
TCLL (roof)	20.0	Plate Grip DOL	1.25	TC	0.42	Vert(LL)	-0.03	7-10	>999	240	MT20	244/190
TCDL	10.0	Lumber DOL	1.25	BC	0.50	Vert(CT)	-0.08	6-7	>999	180		
BCLL	0.0*	Rep Stress Incr	NO	WB	0.34	Horz(CT)	0.01	5	n/a	n/a		
BCDL	10.0	Code	FBC2023/TPI2014	Matrix-MS							Weight: 42 lb	FT = 20%

LUMBER

TOP CHORD 2x4 SP No.2
BOT CHORD 2x4 SP No.2
WEBS 2x4 SP No.2

BRACING

TOP CHORD Structural wood sheathing directly applied or 6-0-0 oc purlins.
BOT CHORD Rigid ceiling directly applied or 10-0-0 oc bracing.

REACTIONS (size) 2=0-11-5, 4= Mechanical, 5= Mechanical
Max Horiz 2=92 (LC 25)
Max Uplift 2=-65 (LC 8), 4=-30 (LC 8)
Max Grav 2=526 (LC 1), 4=136 (LC 1), 5=340 (LC 1)

FORCES (lb) - Maximum Compression/Maximum Tension
TOP CHORD 1-2=0/36, 2-3=-897/0, 3-4=-63/31
BOT CHORD 2-7=-1/827, 6-7=0/827, 5-6=0/0
WEBS 3-7=0/275, 3-6=-880/0

NOTES

1) Wind: ASCE 7-22; Vult=130mph (3-second gust) Vasd=101mph; TCDL=6.0psf; BCDL=6.0psf; h=15ft; B=45ft; L=24ft; eave=4ft; Cat. II; Exp B; Enclosed; MWFRS (directional); cantilever left and right exposed ; end vertical left and right exposed; Lumber DOL=1.60 plate grip DOL=1.60
2) Building Designer / Project engineer responsible for verifying applied roof live load shown covers rain loading requirements specific to the use of this truss component.
3) This truss has been designed for a 10.0 psf bottom chord live load nonconcurrent with any other live loads.
4) * This truss has been designed for a live load of 20.0psf on the bottom chord in all areas where a rectangle 3-06-00 tall by 2-00-00 wide will fit between the bottom chord and any other members.
5) Refer to girder(s) for truss to truss connections.
6) Provide mechanical connection (by others) of truss to bearing plate capable of withstanding 30 lb uplift at joint 4 and 65 lb uplift at joint 2.
7) "NAILED" indicates 3-10d (0.148"x3") or 2-12d (0.148"x3.25") toe-nails per NDS guidlines.
8) In the LOAD CASE(S) section, loads applied to the face of the truss are noted as front (F) or back (B).

LOAD CASE(S) Standard

1) Dead + Roof Live (balanced): Lumber Increase=1.25, Plate Increase=1.25
   Uniform Loads (lb/ft)
   Vert: 1-4=-60, 5-8=-20
   Concentrated Loads (lb)
   Vert: 13=-81 (F=-41, B=-41), 14=62 (F=31, B=31), 15=-8 (F=-4, B=-4), 16=-60 (F=-30, B=-30)

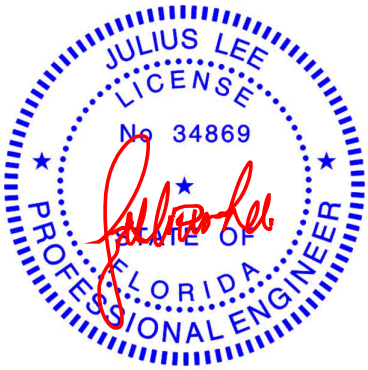

Julius Lee PE No. 34869
MiTek Inc. DBA MiTek USA FL Cert 6634
16023 Swingley Ridge Rd. Chesterfield, MO 63017
Date:

June 24,2026

WARNING - Verify design parameters and READ NOTES ON THIS AND INCLUDED MITEK REFERENCE PAGE MII-7473 rev. 1/2/2023 BEFORE USE.
Design valid for use only with MiTek® connectors. This design is based only upon parameters shown, and is for an individual building component, not a truss system. Before use, the building designer must verify the applicability of design parameters and properly incorporate this design into the overall building design. Bracing indicated is to prevent buckling of individual truss web and/or chord members only. Additional temporary and permanent bracing is always required for stability and to prevent collapse with possible personal injury and property damage. For general guidance regarding the fabrication, storage, delivery, erection and bracing of trusses and truss systems, see **ANSI/TPI1 Quality Criteria and DSB-22** available from Truss Plate Institute (www.tpinst.org) and **BCSI Building Component Safety Information** available from the Structural Building Component Association (www.sbcscomponents.com)

MiTek®
16023 Swingley Ridge Rd.
Chesterfield, MO 63017
314.434.1200 / MiTek-US.com

Job	Truss	Truss Type	Qty	Ply	AYOUB MARCUS
0526-048	CJ01B	Diagonal Hip Girder	2	1	T41656683 Job Reference (optional)

Mayo Truss Company, Inc., Mayo, FL - 32066,

Run: 8.83 S Mar 11 2026 Print: 8.830 S Mar 11 2026 MiTek Industries, Inc. Tue Jun 23 15:45:09 Page: 1
ID:6i7HHsXU4vNPmedTXdSfopzBfm9-RfC?PsB70Hq3NSgPqnL8w3uITXbGKWrCDoi7J4zJC?f

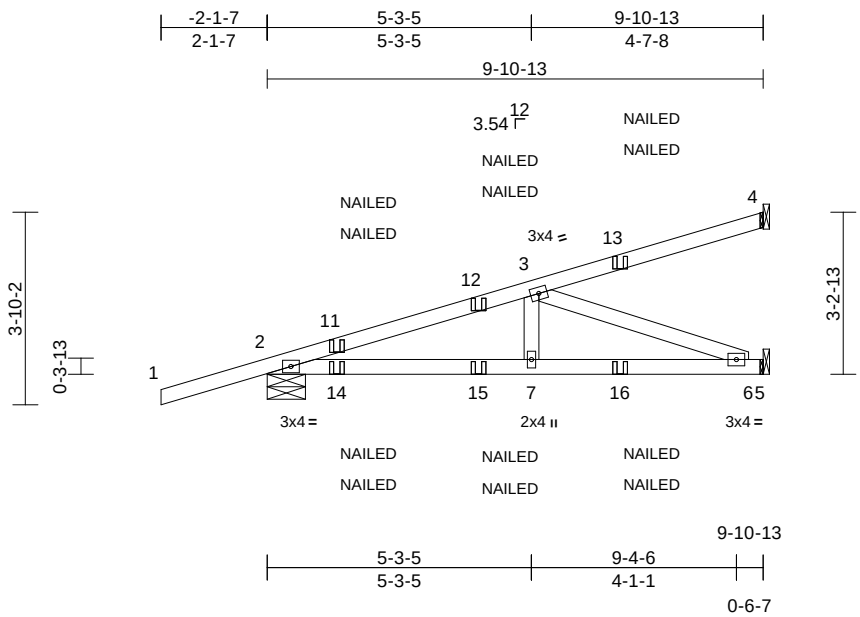

Scale = 1:46

Loading	(psf)	Spacing	2-0-0	CSI		DEFL	in	(loc)	l/defl	L/d	PLATES	GRIP
TCLL (roof)	20.0	Plate Grip DOL	1.25	TC	0.42	Vert(LL)	-0.04	7-10	>999	240	MT20	244/190
TCDL	10.0	Lumber DOL	1.25	BC	0.50	Vert(CT)	-0.08	6-7	>999	180		
BCLL	0.0*	Rep Stress Incr	NO	WB	0.37	Horz(CT)	0.01	5	n/a	n/a		
BCDL	10.0	Code	FBC2023/TPI2014	Matrix-MS							Weight: 42 lb	FT = 20%

LUMBER

TOP CHORD 2x4 SP No.2
BOT CHORD 2x4 SP No.2
WEBS 2x4 SP No.2

BRACING

TOP CHORD Structural wood sheathing directly applied or 5-10-13 oc purlins.
BOT CHORD Rigid ceiling directly applied or 10-0-0 oc bracing.

REACTIONS (size) 2=0-9-2, 4= Mechanical, 5= Mechanical
Max Horiz 2=119 (LC 25)
Max Uplift 2=-123 (LC 8), 4=-53 (LC 8), 5=-14 (LC 8)
Max Grav 2=559 (LC 13), 4=137 (LC 13), 5=372 (LC 13)

FORCES (lb) - Maximum Compression/Maximum Tension
TOP CHORD 1-2=0/36, 2-3=-991/65, 3-4=-77/32
BOT CHORD 2-7=-124/928, 6-7=-124/928, 5-6=0/0
WEBS 3-7=0/275, 3-6=-987/132

NOTES

1) Wind: ASCE 7-22; Vult=130mph (3-second gust) Vasd=101mph; TCDL=6.0psf; BCDL=6.0psf; h=15ft; B=45ft; L=24ft; eave=4ft; Cat. II; Exp B; Partially Enclosed; MWFRS (directional); cantilever left and right exposed ; end vertical left and right exposed; Lumber DOL=1.60 plate grip DOL=1.60
2) Building Designer / Project engineer responsible for verifying applied roof live load shown covers rain loading requirements specific to the use of this truss component.
3) This truss has been designed for a 10.0 psf bottom chord live load nonconcurrent with any other live loads.
4) * This truss has been designed for a live load of 20.0psf on the bottom chord in all areas where a rectangle 3-06-00 tall by 2-00-00 wide will fit between the bottom chord and any other members.
5) Refer to girder(s) for truss to truss connections.
6) Provide mechanical connection (by others) of truss to bearing plate capable of withstanding 53 lb uplift at joint 4, 123 lb uplift at joint 2 and 14 lb uplift at joint 5.
7) "NAILED" indicates 3-10d (0.148"x3") or 2-12d (0.148"x3.25") toe-nails per NDS guidlines.
8) In the LOAD CASE(S) section, loads applied to the face of the truss are noted as front (F) or back (B).

LOAD CASE(S) Standard

1) Dead + Roof Live (balanced): Lumber Increase=1.25, Plate Increase=1.25
   Uniform Loads (lb/ft)
   Vert: 1-4=-60, 5-8=-20
   Concentrated Loads (lb)
   Vert: 13=-81 (F=-41, B=-41), 14=62 (F=31, B=31), 15=-8 (F=-4, B=-4), 16=-60 (F=-30, B=-30)

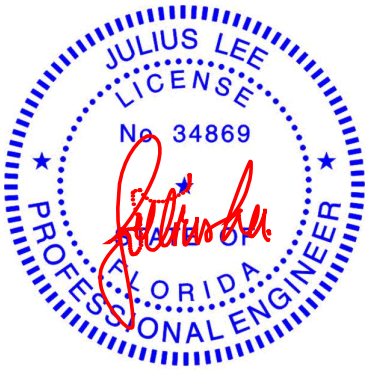

Julius Lee PE No. 34869
MiTek Inc. DBA MiTek USA FL Cert 6634
16023 Swingley Ridge Rd. Chesterfield, MO 63017
Date:

June 24,2026

WARNING - Verify design parameters and READ NOTES ON THIS AND INCLUDED MITEK REFERENCE PAGE MII-7473 rev. 1/2/2023 BEFORE USE.
Design valid for use only with MiTek® connectors. This design is based only upon parameters shown, and is for an individual building component, not a truss system. Before use, the building designer must verify the applicability of design parameters and properly incorporate this design into the overall building design. Bracing indicated is to prevent buckling of individual truss web and/or chord members only. Additional temporary and permanent bracing is always required for stability and to prevent collapse with possible personal injury and property damage. For general guidance regarding the fabrication, storage, delivery, erection and bracing of trusses and truss systems, see **ANSI/TPI1 Quality Criteria and DSB-22** available from Truss Plate Institute (www.tpinst.org) and **BCSI Building Component Safety Information** available from the Structural Building Component Association (www.sbcscomponents.com)

MiTek®
16023 Swingley Ridge Rd.
Chesterfield, MO 63017
314.434.1200 / MiTek-US.com

Job	Truss	Truss Type	Qty	Ply	AYOUB MARCUS
0526-048	J01	Jack-Open	16	1	Job Reference (optional) T41656684

Mayo Truss Company, Inc., Mayo, FL - 32066, Run: 8.83 S Mar 11 2026 Print: 8.830 S Mar 11 2026 MiTek Industries, Inc. Tue Jun 23 15:45:10 Page: 1
ID:w8DHsnYciWjg5R5ywAWC8DzBfoj-RfC?PsB70Hq3NSgPqnL8w3uITXbGKWrCDoi7J4zJC?f

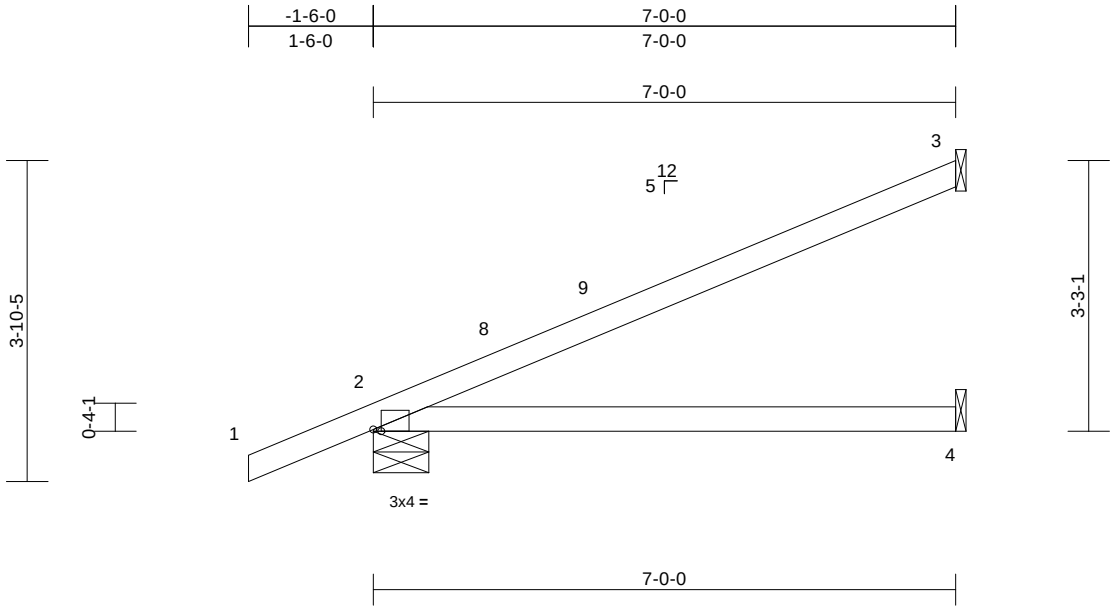

Scale = 1:27.7

Plate Offsets (X, Y): [2:0-1-2,Edge]

Loading	(psf)	Spacing	2-0-0	CSI		DEFL	in	(loc)	l/defl	L/d	PLATES	GRIP
TCLL (roof)	20.0	Plate Grip DOL	1.25	TC	0.59	Vert(LL)	-0.08	4-7	>992	240	MT20	244/190
TCDL	10.0	Lumber DOL	1.25	BC	0.49	Vert(CT)	-0.21	4-7	>404	180		
BCLL	0.0*	Rep Stress Incr	YES	WB	0.00	Horz(CT)	0.00	2	n/a	n/a		
BCDL	10.0	Code	FBC2023/TPI2014	Matrix-AS							Weight: 24 lb	FT = 20%

LUMBER
TOP CHORD 2x4 SP No.2
BOT CHORD 2x4 SP No.2

BRACING
TOP CHORD Structural wood sheathing directly applied.
BOT CHORD Rigid ceiling directly applied.

REACTIONS (size) 2=0-8-0, 3= Mechanical, 4= Mechanical
Max Horiz 2=92 (LC 12)
Max Uplift 2=-27 (LC 12), 3=-38 (LC 12)
Max Grav 2=377 (LC 1), 3=185 (LC 1), 4=124 (LC 3)

FORCES (lb) - Maximum Compression/Maximum Tension
TOP CHORD 1-2=0/35, 2-3=-116/57
BOT CHORD 2-4=-27/93

NOTES
1) Wind: ASCE 7-22; Vult=130mph (3-second gust) Vasd=101mph; TCDL=6.0psf; BCDL=6.0psf; h=15ft; B=45ft; L=24ft; eave=4ft; Cat. II; Exp B; Enclosed; MWFRS (directional) and C-C Zone3 -1-6-0 to 1-6-0, Zone1 1-6-0 to 6-11-4 zone; cantilever left and right exposed ; end vertical left and right exposed;C-C for members and forces & MWFRS for reactions shown; Lumber DOL=1.60 plate grip DOL=1.60
2) Building Designer / Project engineer responsible for verifying applied roof live load shown covers rain loading requirements specific to the use of this truss component.
3) This truss has been designed for a 10.0 psf bottom chord live load nonconcurrent with any other live loads.
4) * This truss has been designed for a live load of 20.0psf on the bottom chord in all areas where a rectangle 3-06-00 tall by 2-00-00 wide will fit between the bottom chord and any other members.
5) Refer to girder(s) for truss to truss connections.
6) Provide mechanical connection (by others) of truss to bearing plate capable of withstanding 38 lb uplift at joint 3 and 27 lb uplift at joint 2.
7) This truss design requires that a minimum of 7/16" structural wood sheathing be applied directly to the top chord and 1/2" gypsum sheetrock be applied directly to the bottom chord.

LOAD CASE(S) Standard

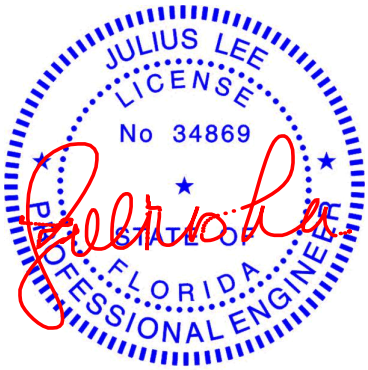

Julius Lee PE No. 34869
MiTek Inc. DBA MiTek USA FL Cert 6634
16023 Swingley Ridge Rd. Chesterfield, MO 63017

Date: June 24,2026

WARNING - Verify design parameters and READ NOTES ON THIS AND INCLUDED MITEK REFERENCE PAGE MII-7473 rev. 1/2/2023 BEFORE USE.
Design valid for use only with MiTek® connectors. This design is based only upon parameters shown, and is for an individual building component, not a truss system. Before use, the building designer must verify the applicability of design parameters and properly incorporate this design into the overall building design. Bracing indicated is to prevent buckling of individual truss web and/or chord members only. Additional temporary and permanent bracing is always required for stability and to prevent collapse with possible personal injury and property damage. For general guidance regarding the fabrication, storage, delivery, erection and bracing of trusses and truss systems, see **ANSI/TPI1 Quality Criteria and DSB-22** available from Truss Plate Institute (www.tpinst.org) and **BCSI Building Component Safety Information** available from the Structural Building Component Association (www.sbcscomponents.com)

MiTek®
16023 Swingley Ridge Rd.
Chesterfield, MO 63017
314.434.1200 / MiTek-US.com

Job	Truss	Truss Type	Qty	Ply	AYOUB MARCUS
0526-048	J01B	Jack-Open	3	1	Job Reference (optional) T41656685

Mayo Truss Company, Inc., Mayo, FL - 32066, Run: 8.83 S Mar 11 2026 Print: 8.830 S Mar 11 2026 MiTek Industries, Inc. Tue Jun 23 15:45:10 Page: 1
ID:eVZv3WWsJcFY8V2HzvxQFbzBfmA-RfC?PsB70Hq3NSgPqnL8w3uITXbGKWrCDoi7J4zJC?f

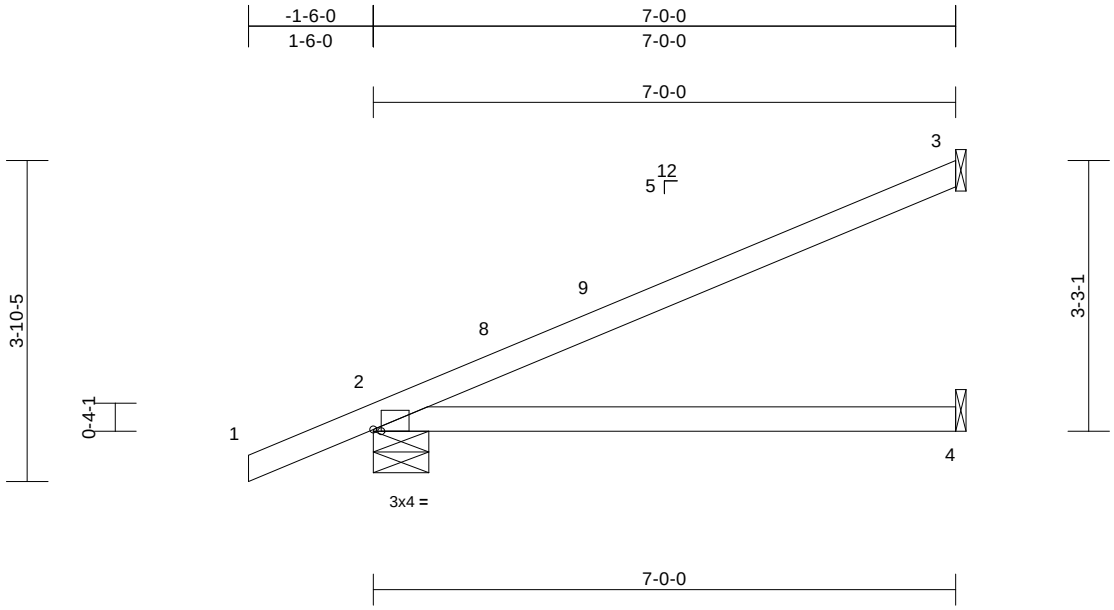

Scale = 1:27.7

Plate Offsets (X, Y): [2:0-1-2,Edge]

Loading	(psf)	Spacing	2-0-0	CSI		DEFL	in	(loc)	l/defl	L/d	PLATES	GRIP
TCLL (roof)	20.0	Plate Grip DOL	1.25	TC	0.59	Vert(LL)	0.10	4-7	>857	240	MT20	244/190
TCDL	10.0	Lumber DOL	1.25	BC	0.49	Vert(CT)	-0.21	4-7	>404	180		
BCLL	0.0*	Rep Stress Incr	YES	WB	0.00	Horz(CT)	0.00	2	n/a	n/a		
BCDL	10.0	Code	FBC2023/TPI2014	Matrix-AS							Weight: 24 lb	FT = 20%

LUMBER
TOP CHORD 2x4 SP No.2
BOT CHORD 2x4 SP No.2

BRACING
TOP CHORD Structural wood sheathing directly applied.
BOT CHORD Rigid ceiling directly applied.

REACTIONS (size) 2=0-8-0, 3= Mechanical, 4= Mechanical
Max Horiz 2=119 (LC 12)
Max Uplift 2=-53 (LC 12), 3=-71 (LC 12)
Max Grav 2=377 (LC 1), 3=196 (LC 17), 4=124 (LC 3)

FORCES (lb) - Maximum Compression/Maximum Tension
TOP CHORD 1-2=0/35, 2-3=-113/63
BOT CHORD 2-4=-48/114

NOTES
1) Wind: ASCE 7-22; Vult=130mph (3-second gust) Vasd=101mph; TCDL=6.0psf; BCDL=6.0psf; h=15ft; B=45ft; L=24ft; eave=4ft; Cat. II; Exp B; Partially Enclosed; MWFRS (directional) and C-C Zone3 -1-6-0 to 1-6-0, Zone1 1-6-0 to 6-11-4 zone; cantilever left and right exposed ; end vertical left and right exposed;C-C for members and forces & MWFRS for reactions shown; Lumber DOL=1.60 plate grip DOL=1.60
2) Building Designer / Project engineer responsible for verifying applied roof live load shown covers rain loading requirements specific to the use of this truss component.
3) This truss has been designed for a 10.0 psf bottom chord live load nonconcurrent with any other live loads.
4) * This truss has been designed for a live load of 20.0psf on the bottom chord in all areas where a rectangle 3-06-00 tall by 2-00-00 wide will fit between the bottom chord and any other members.
5) Refer to girder(s) for truss to truss connections.
6) Provide mechanical connection (by others) of truss to bearing plate capable of withstanding 71 lb uplift at joint 3 and 53 lb uplift at joint 2.
7) This truss design requires that a minimum of 7/16" structural wood sheathing be applied directly to the top chord and 1/2" gypsum sheetrock be applied directly to the bottom chord.

LOAD CASE(S) Standard

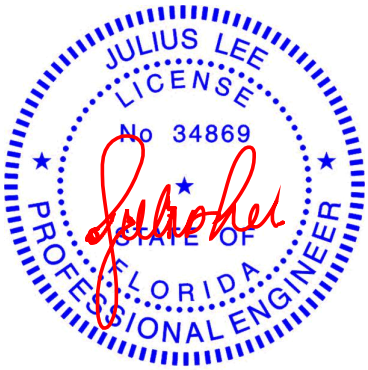

Julius Lee PE No. 34869
MiTek Inc. DBA MiTek USA FL Cert 6634
16023 Swingley Ridge Rd. Chesterfield, MO 63017
Date:

June 24,2026

WARNING - Verify design parameters and READ NOTES ON THIS AND INCLUDED MITEK REFERENCE PAGE MII-7473 rev. 1/2/2023 BEFORE USE.
Design valid for use only with MiTek® connectors. This design is based only upon parameters shown, and is for an individual building component, not a truss system. Before use, the building designer must verify the applicability of design parameters and properly incorporate this design into the overall building design. Bracing indicated is to prevent buckling of individual truss web and/or chord members only. Additional temporary and permanent bracing is always required for stability and to prevent collapse with possible personal injury and property damage. For general guidance regarding the fabrication, storage, delivery, erection and bracing of trusses and truss systems, see **ANSI/TPI1 Quality Criteria and DSB-22** available from Truss Plate Institute (www.tpinst.org) and **BCSI Building Component Safety Information** available from the Structural Building Component Association (www.sbcscomponents.com)

MiTek®
16023 Swingley Ridge Rd.
Chesterfield, MO 63017
314.434.1200 / MiTek-US.com

Job	Truss	Truss Type	Qty	Ply	AYOUB MARCUS
0526-048	J02	Jack-Open	7	1	T41656686 Job Reference (optional)

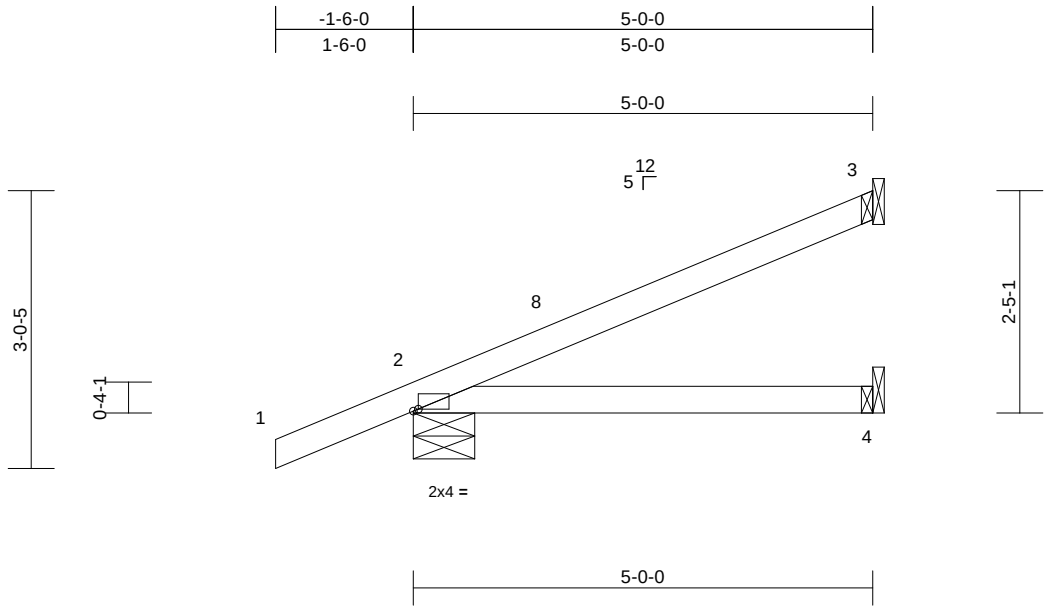

Scale = 1:25.1

Plate Offsets (X, Y): [2:0-0-10,Edge]

Loading	(psf)	Spacing	2-0-0	CSI		DEFL	in	(loc)	l/defl	L/d	PLATES	GRIP
TCLL (roof)	20.0	Plate Grip DOL	1.25	TC	0.28	Vert(LL)	0.03	4-7	>999	240	MT20	244/190
TCDL	10.0	Lumber DOL	1.25	BC	0.23	Vert(CT)	-0.05	4-7	>999	180		
BCLL	0.0*	Rep Stress Incr	YES	WB	0.00	Horz(CT)	0.00	2	n/a	n/a		
BCDL	10.0	Code	FBC2023/TPI2014	Matrix-AS							Weight: 18 lb	FT = 20%

LUMBER
TOP CHORD 2x4 SP No.2
BOT CHORD 2x4 SP No.2

BRACING
TOP CHORD Structural wood sheathing directly applied.
BOT CHORD Rigid ceiling directly applied.

REACTIONS (size) 2=0-8-0, 3= Mechanical, 4= Mechanical
Max Horiz 2=72 (LC 12)
Max Uplift 2=-33 (LC 12), 3=-25 (LC 12)
Max Grav 2=301 (LC 1), 3=125 (LC 1), 4=87 (LC 3)

FORCES (lb) - Maximum Compression/Maximum Tension
TOP CHORD 1-2=0/35, 2-3=-107/38
BOT CHORD 2-4=-19/62

NOTES
1) Wind: ASCE 7-22; Vult=130mph (3-second gust) Vasd=101mph; TCDL=6.0psf; BCDL=6.0psf; h=15ft; B=45ft; L=24ft; eave=4ft; Cat. II; Exp B; Enclosed; MWFRS (directional) and C-C Zone3 -1-6-0 to 1-6-0, Zone1 1-6-0 to 4-11-4 zone; cantilever left and right exposed ; end vertical left and right exposed;C-C for members and forces & MWFRS for reactions shown; Lumber DOL=1.60 plate grip DOL=1.60
2) Building Designer / Project engineer responsible for verifying applied roof live load shown covers rain loading requirements specific to the use of this truss component.
3) This truss has been designed for a 10.0 psf bottom chord live load nonconcurrent with any other live loads.
4) * This truss has been designed for a live load of 20.0psf on the bottom chord in all areas where a rectangle 3-06-00 tall by 2-00-00 wide will fit between the bottom chord and any other members.
5) Refer to girder(s) for truss to truss connections.
6) Provide mechanical connection (by others) of truss to bearing plate capable of withstanding 25 lb uplift at joint 3 and 33 lb uplift at joint 2.
7) This truss design requires that a minimum of 7/16" structural wood sheathing be applied directly to the top chord and 1/2" gypsum sheetrock be applied directly to the bottom chord.

LOAD CASE(S) Standard

Julius Lee PE No. 34869
MiTek Inc. DBA MiTek USA FL Cert 6634
16023 Swingley Ridge Rd. Chesterfield, MO 63017
Date:

June 24,2026

WARNING - Verify design parameters and READ NOTES ON THIS AND INCLUDED MITEK REFERENCE PAGE MII-7473 rev. 1/2/2023 BEFORE USE.
Design valid for use only with MiTek® connectors. This design is based only upon parameters shown, and is for an individual building component, not a truss system. Before use, the building designer must verify the applicability of design parameters and properly incorporate this design into the overall building design. Bracing indicated is to prevent buckling of individual truss web and/or chord members only. Additional temporary and permanent bracing is always required for stability and to prevent collapse with possible personal injury and property damage. For general guidance regarding the fabrication, storage, delivery, erection and bracing of trusses and truss systems, see **ANSI/TPI1 Quality Criteria and DSB-22** available from Truss Plate Institute (www.tpinst.org) and **BCSI Building Component Safety Information** available from the Structural Building Component Association (www.sbcscomponents.com)

MiTek®
16023 Swingley Ridge Rd.
Chesterfield, MO 63017
314.434.1200 / MiTek-US.com

Job	Truss	Truss Type	Qty	Ply	AYOUB MARCUS
0526-048	J02A	Jack-Open	1	1	T41656687 Job Reference (optional)

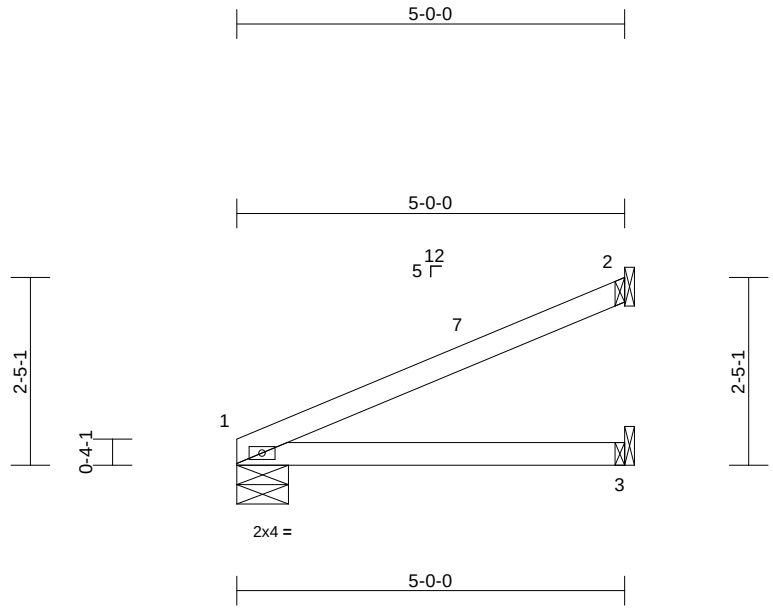

Scale = 1:29.7

Loading	(psf)	Spacing	2-0-0	CSI		DEFL	in	(loc)	l/defl	L/d	PLATES	GRIP
TCLL (roof)	20.0	Plate Grip DOL	1.25	TC	0.31	Vert(LL)	0.03	3-6	>999	240	MT20	244/190
TCDL	10.0	Lumber DOL	1.25	BC	0.26	Vert(CT)	-0.06	3-6	>966	180		
BCLL	0.0*	Rep Stress Incr	YES	WB	0.00	Horz(CT)	0.00	1	n/a	n/a		
BCDL	10.0	Code	FBC2023/TPI2014	Matrix-AS							Weight: 16 lb	FT = 20%

LUMBER
TOP CHORD 2x4 SP No.2
BOT CHORD 2x4 SP No.2

BRACING
TOP CHORD Structural wood sheathing directly applied.
BOT CHORD Rigid ceiling directly applied.

REACTIONS (size) 1=0-8-0, 2= Mechanical, 3= Mechanical
Max Horiz 1=49 (LC 12)
Max Uplift 2=-28 (LC 12)
Max Grav 1=198 (LC 1), 2=132 (LC 1), 3=90 (LC 3)

FORCES (lb) - Maximum Compression/Maximum Tension
TOP CHORD 1-2=-98/41
BOT CHORD 1-3=-60/87

NOTES
1) Wind: ASCE 7-22; Vult=130mph (3-second gust) Vasd=101mph; TCDL=6.0psf; BCDL=6.0psf; h=15ft; B=45ft; L=24ft; eave=4ft; Cat. II; Exp B; Enclosed; MWFRS (directional) and C-C Zone3 0-0-0 to 3-0-0, Zone1 3-0-0 to 4-11-4 zone; cantilever left and right exposed ; end vertical left and right exposed;C-C for members and forces & MWFRS for reactions shown; Lumber DOL=1.60 plate grip DOL=1.60
2) Building Designer / Project engineer responsible for verifying applied roof live load shown covers rain loading requirements specific to the use of this truss component.
3) This truss has been designed for a 10.0 psf bottom chord live load nonconcurrent with any other live loads.
4) * This truss has been designed for a live load of 20.0psf on the bottom chord in all areas where a rectangle 3-06-00 tall by 2-00-00 wide will fit between the bottom chord and any other members.
5) Refer to girder(s) for truss to truss connections.
6) Provide mechanical connection (by others) of truss to bearing plate capable of withstanding 28 lb uplift at joint 2.
7) This truss design requires that a minimum of 7/16" structural wood sheathing be applied directly to the top chord and 1/2" gypsum sheetrock be applied directly to the bottom chord.

LOAD CASE(S) Standard

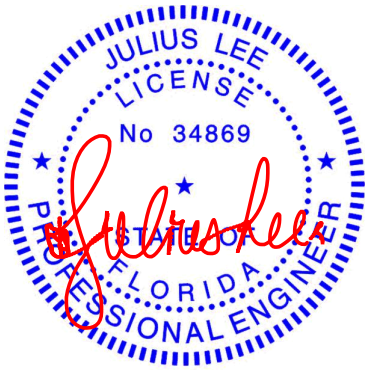

Julius Lee PE No. 34869
MiTek Inc. DBA MiTek USA FL Cert 6634
16023 Swingley Ridge Rd. Chesterfield, MO 63017
Date:

June 24,2026

WARNING - Verify design parameters and READ NOTES ON THIS AND INCLUDED MITEK REFERENCE PAGE MII-7473 rev. 1/2/2023 BEFORE USE.
Design valid for use only with MiTek® connectors. This design is based only upon parameters shown, and is for an individual building component, not a truss system. Before use, the building designer must verify the applicability of design parameters and properly incorporate this design into the overall building design. Bracing indicated is to prevent buckling of individual truss web and/or chord members only. Additional temporary and permanent bracing is always required for stability and to prevent collapse with possible personal injury and property damage. For general guidance regarding the fabrication, storage, delivery, erection and bracing of trusses and truss systems, see **ANSI/TPI1 Quality Criteria and DSB-22** available from Truss Plate Institute (www.tpinst.org) and **BCSI Building Component Safety Information** available from the Structural Building Component Association (www.sbcscomponents.com)

MiTek®
16023 Swingley Ridge Rd.
Chesterfield, MO 63017
314.434.1200 / MiTek-US.com

Job	Truss	Truss Type	Qty	Ply	AYOUB MARCUS
0526-048	J02B	Jack-Open	4	1	T41656688 Job Reference (optional)

Mayo Truss Company, Inc., Mayo, FL - 32066, Run: 8.83 S Mar 11 2026 Print: 8.830 S Mar 11 2026 MiTek Industries, Inc. Tue Jun 23 15:45:10 Page: 1
ID:eVZv3WWsJcFY8V2HzvxQFbzBfmA-RfC?PsB70Hq3NSgPqnL8w3uITXbGKWrCDoi7J4zJC?f

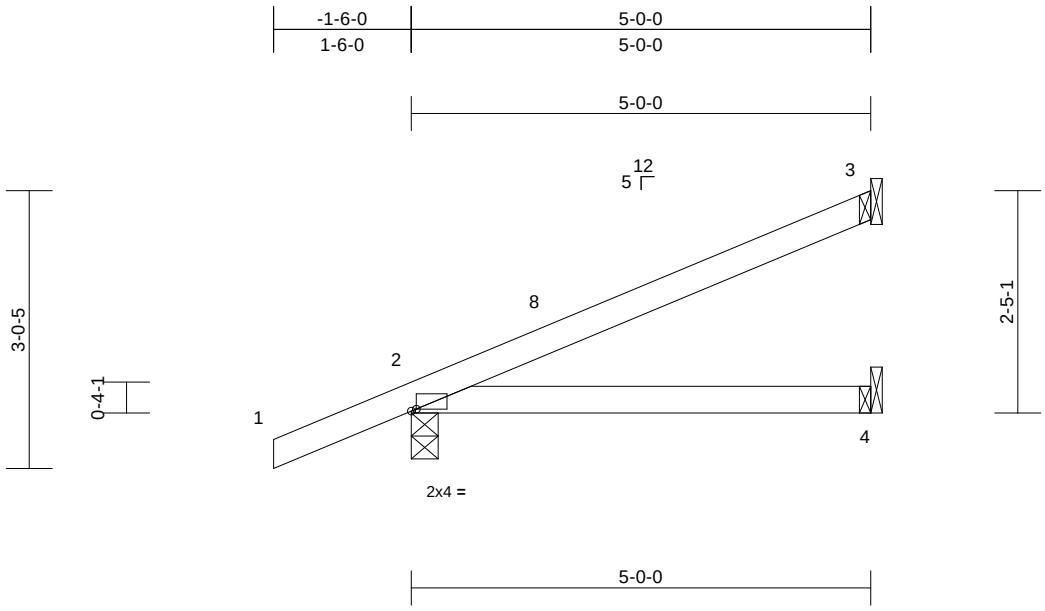

Scale = 1:25.1

Plate Offsets (X, Y): [2:0-0-10,Edge]

Loading	(psf)	Spacing	2-0-0	CSI		DEFL	in	(loc)	l/defl	L/d	PLATES	GRIP
TCLL (roof)	20.0	Plate Grip DOL	1.25	TC	0.28	Vert(LL)	0.03	4-7	>999	240	MT20	244/190
TCDL	10.0	Lumber DOL	1.25	BC	0.23	Vert(CT)	-0.05	4-7	>999	180		
BCLL	0.0*	Rep Stress Incr	YES	WB	0.00	Horz(CT)	0.00	3	n/a	n/a		
BCDL	10.0	Code	FBC2023/TPI2014	Matrix-AS							Weight: 18 lb	FT = 20%

LUMBER
TOP CHORD 2x4 SP No.2
BOT CHORD 2x4 SP No.2

BRACING
TOP CHORD Structural wood sheathing directly applied.
BOT CHORD Rigid ceiling directly applied.

REACTIONS (size) 2=0-3-8, 3= Mechanical, 4= Mechanical
Max Horiz 2=91 (LC 12)
Max Uplift 2=-52 (LC 12), 3=-47 (LC 12)
Max Grav 2=301 (LC 1), 3=133 (LC 17), 4=87 (LC 3)

FORCES (lb) - Maximum Compression/Maximum Tension
TOP CHORD 1-2=0/35, 2-3=-104/45
BOT CHORD 2-4=-34/76

NOTES
1) Wind: ASCE 7-22; Vult=130mph (3-second gust) Vasd=101mph; TCDL=6.0psf; BCDL=6.0psf; h=15ft; B=45ft; L=24ft; eave=4ft; Cat. II; Exp B; Partially Enclosed; MWFRS (directional) and C-C Zone3 -1-6-0 to 1-6-0, Zone1 1-6-0 to 4-11-4 zone; cantilever left and right exposed ; end vertical left and right exposed;C-C for members and forces & MWFRS for reactions shown; Lumber DOL=1.60 plate grip DOL=1.60
2) Building Designer / Project engineer responsible for verifying applied roof live load shown covers rain loading requirements specific to the use of this truss component.
3) This truss has been designed for a 10.0 psf bottom chord live load nonconcurrent with any other live loads.
4) * This truss has been designed for a live load of 20.0psf on the bottom chord in all areas where a rectangle 3-06-00 tall by 2-00-00 wide will fit between the bottom chord and any other members.
5) Refer to girder(s) for truss to truss connections.
6) Provide mechanical connection (by others) of truss to bearing plate capable of withstanding 47 lb uplift at joint 3 and 52 lb uplift at joint 2.
7) This truss design requires that a minimum of 7/16" structural wood sheathing be applied directly to the top chord and 1/2" gypsum sheetrock be applied directly to the bottom chord.

LOAD CASE(S) Standard

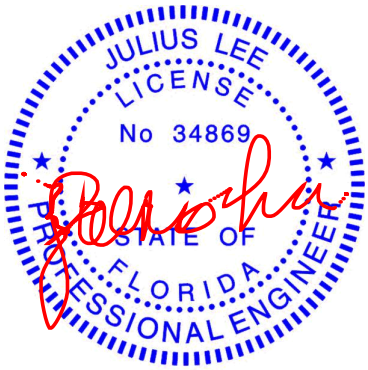

Julius Lee PE No. 34869
MiTek Inc. DBA MiTek USA FL Cert 6634
16023 Swingley Ridge Rd. Chesterfield, MO 63017

Date:

June 24,2026

WARNING - Verify design parameters and READ NOTES ON THIS AND INCLUDED MITEK REFERENCE PAGE MII-7473 rev. 1/2/2023 BEFORE USE.
Design valid for use only with MiTek® connectors. This design is based only upon parameters shown, and is for an individual building component, not a truss system. Before use, the building designer must verify the applicability of design parameters and properly incorporate this design into the overall building design. Bracing indicated is to prevent buckling of individual truss web and/or chord members only. Additional temporary and permanent bracing is always required for stability and to prevent collapse with possible personal injury and property damage. For general guidance regarding the fabrication, storage, delivery, erection and bracing of trusses and truss systems, see **ANSI/TPI1 Quality Criteria and DSB-22** available from Truss Plate Institute (www.tpinst.org) and **BCSI Building Component Safety Information** available from the Structural Building Component Association (www.sbcscomponents.com)

MiTek®
16023 Swingley Ridge Rd.
Chesterfield, MO 63017
314.434.1200 / MiTek-US.com

Job	Truss	Truss Type	Qty	Ply	AYOUB MARCUS
0526-048	J03	Jack-Open	7	1	Job Reference (optional) T41656689

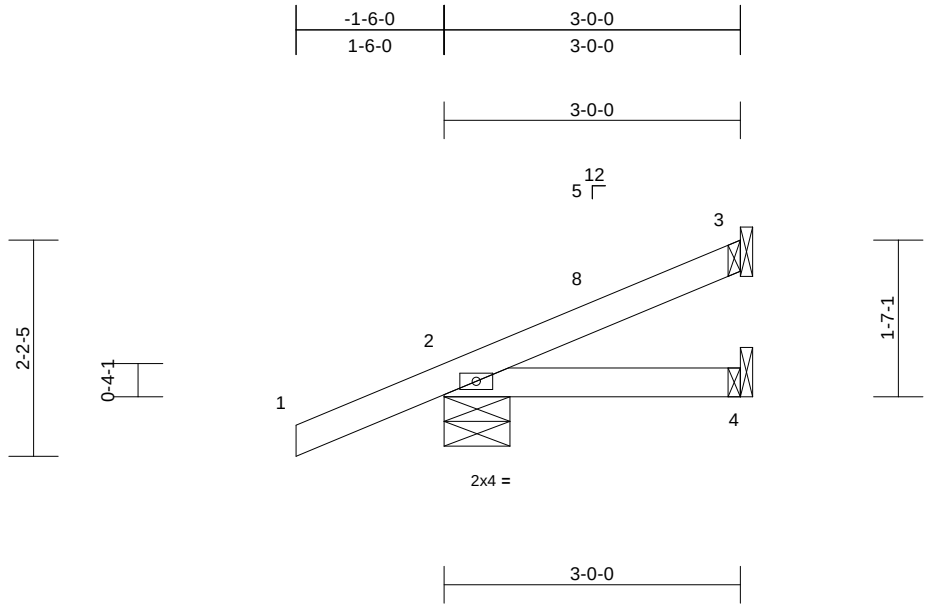

Scale = 1:23.3

Loading	(psf)	Spacing	2-0-0	CSI		DEFL	in	(loc)	l/defl	L/d	PLATES	GRIP
TCLL (roof)	20.0	Plate Grip DOL	1.25	TC	0.14	Vert(LL)	0.00	4-7	>999	240	MT20	244/190
TCDL	10.0	Lumber DOL	1.25	BC	0.07	Vert(CT)	-0.01	4-7	>999	180		
BCLL	0.0*	Rep Stress Incr	YES	WB	0.00	Horz(CT)	0.00	3	n/a	n/a		
BCDL	10.0	Code	FBC2023/TPI2014	Matrix-MP							Weight: 12 lb	FT = 20%

LUMBER
TOP CHORD 2x4 SP No.2
BOT CHORD 2x4 SP No.2

BRACING
TOP CHORD Structural wood sheathing directly applied or 3-0-0 oc purlins.
BOT CHORD Rigid ceiling directly applied or 10-0-0 oc bracing.

REACTIONS (size) 2=0-8-0, 3= Mechanical, 4= Mechanical
Max Horiz 2=52 (LC 12)
Max Uplift 2=-42 (LC 12), 3=-10 (LC 12)
Max Grav 2=230 (LC 1), 3=64 (LC 1), 4=50 (LC 3)

FORCES (lb) - Maximum Compression/Maximum Tension
TOP CHORD 1-2=0/35, 2-3=-93/28
BOT CHORD 2-4=-31/69

NOTES
1) Wind: ASCE 7-22; Vult=130mph (3-second gust) Vasd=101mph; TCDL=6.0psf; BCDL=6.0psf; h=15ft; B=45ft; L=24ft; eave=4ft; Cat. II; Exp B; Enclosed; MWFRS (directional) and C-C Zone3 -1-6-0 to 1-6-0, Zone1 1-6-0 to 2-11-4 zone; cantilever left and right exposed ; end vertical left and right exposed;C-C for members and forces & MWFRS for reactions shown; Lumber DOL=1.60 plate grip DOL=1.60
2) Building Designer / Project engineer responsible for verifying applied roof live load shown covers rain loading requirements specific to the use of this truss component.
3) This truss has been designed for a 10.0 psf bottom chord live load nonconcurrent with any other live loads.
4) * This truss has been designed for a live load of 20.0psf on the bottom chord in all areas where a rectangle 3-06-00 tall by 2-00-00 wide will fit between the bottom chord and any other members.
5) Refer to girder(s) for truss to truss connections.
6) Provide mechanical connection (by others) of truss to bearing plate capable of withstanding 10 lb uplift at joint 3 and 42 lb uplift at joint 2.

LOAD CASE(S) Standard

Julius Lee PE No. 34869
MiTek Inc. DBA MiTek USA FL Cert 6634
16023 Swingley Ridge Rd. Chesterfield, MO 63017
Date:

June 24,2026

WARNING - Verify design parameters and READ NOTES ON THIS AND INCLUDED MITEK REFERENCE PAGE MII-7473 rev. 1/2/2023 BEFORE USE.
Design valid for use only with MiTek® connectors. This design is based only upon parameters shown, and is for an individual building component, not a truss system. Before use, the building designer must verify the applicability of design parameters and properly incorporate this design into the overall building design. Bracing indicated is to prevent buckling of individual truss web and/or chord members only. Additional temporary and permanent bracing is always required for stability and to prevent collapse with possible personal injury and property damage. For general guidance regarding the fabrication, storage, delivery, erection and bracing of trusses and truss systems, see **ANSI/TPI1 Quality Criteria and DSB-22** available from Truss Plate Institute (www.tpinst.org) and **BCSI Building Component Safety Information** available from the Structural Building Component Association (www.sbcscomponents.com)

MiTek®
16023 Swingley Ridge Rd.
Chesterfield, MO 63017
314.434.1200 / MiTek-US.com

Job	Truss	Truss Type	Qty	Ply	AYOUB MARCUS
0526-048	J03A	Jack-Open	1	1	Job Reference (optional) T41656690

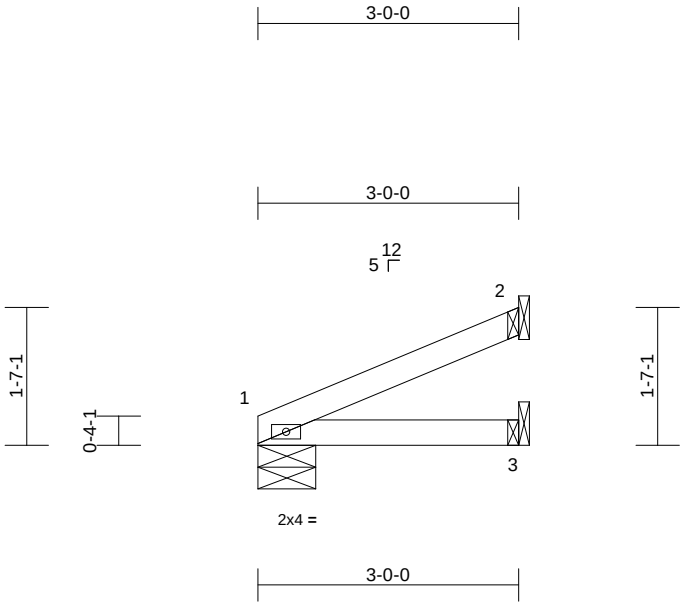

Scale = 1:26.5

Loading	(psf)	Spacing	2-0-0	CSI		DEFL	in	(loc)	l/defl	L/d	PLATES	GRIP
TCLL (roof)	20.0	Plate Grip DOL	1.25	TC	0.10	Vert(LL)	0.00	3-6	>999	240	MT20	244/190
TCDL	10.0	Lumber DOL	1.25	BC	0.10	Vert(CT)	-0.01	3-6	>999	180		
BCLL	0.0*	Rep Stress Incr	YES	WB	0.00	Horz(CT)	0.00	1	n/a	n/a		
BCDL	10.0	Code	FBC2023/TPI2014	Matrix-MP							Weight: 9 lb	FT = 20%

LUMBER
TOP CHORD 2x4 SP No.2
BOT CHORD 2x4 SP No.2

BRACING
TOP CHORD Structural wood sheathing directly applied or 3-0-0 oc purlins.
BOT CHORD Rigid ceiling directly applied or 10-0-0 oc bracing.

REACTIONS (size) 1=0-8-0, 2= Mechanical, 3= Mechanical
Max Horiz 1=29 (LC 12)
Max Uplift 2=-15 (LC 12)
Max Grav 1=118 (LC 1), 2=75 (LC 1), 3=54 (LC 3)

FORCES (lb) - Maximum Compression/Maximum Tension
TOP CHORD 1-2=-58/24
BOT CHORD 1-3=-34/48

NOTES
1) Wind: ASCE 7-22; Vult=130mph (3-second gust) Vasd=101mph; TCDL=6.0psf; BCDL=6.0psf; h=15ft; B=45ft; L=24ft; eave=4ft; Cat. II; Exp B; Enclosed; MWFRS (directional) and C-C Zone3 zone; cantilever left and right exposed ; end vertical left and right exposed;C-C for members and forces & MWFRS for reactions shown; Lumber DOL=1.60 plate grip DOL=1.60
2) Building Designer / Project engineer responsible for verifying applied roof live load shown covers rain loading requirements specific to the use of this truss component.
3) This truss has been designed for a 10.0 psf bottom chord live load nonconcurrent with any other live loads.
4) * This truss has been designed for a live load of 20.0psf on the bottom chord in all areas where a rectangle 3-06-00 tall by 2-00-00 wide will fit between the bottom chord and any other members.
5) Refer to girder(s) for truss to truss connections.
6) Provide mechanical connection (by others) of truss to bearing plate capable of withstanding 15 lb uplift at joint 2.

LOAD CASE(S) Standard

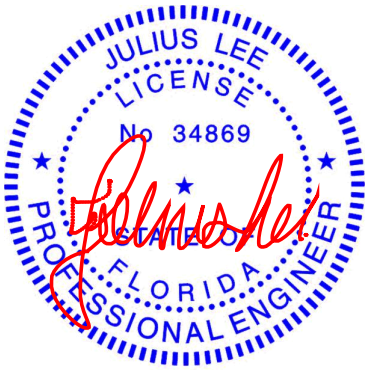

Julius Lee PE No. 34869
MiTek Inc. DBA MiTek USA FL Cert 6634
16023 Swingley Ridge Rd. Chesterfield, MO 63017
Date:

June 24,2026

WARNING - Verify design parameters and READ NOTES ON THIS AND INCLUDED MITEK REFERENCE PAGE MII-7473 rev. 1/2/2023 BEFORE USE.
Design valid for use only with MiTek® connectors. This design is based only upon parameters shown, and is for an individual building component, not a truss system. Before use, the building designer must verify the applicability of design parameters and properly incorporate this design into the overall building design. Bracing indicated is to prevent buckling of individual truss web and/or chord members only. Additional temporary and permanent bracing is always required for stability and to prevent collapse with possible personal injury and property damage. For general guidance regarding the fabrication, storage, delivery, erection and bracing of trusses and truss systems, see **ANSI/TPI1 Quality Criteria and DSB-22** available from Truss Plate Institute (www.tpinst.org) and **BCSI Building Component Safety Information** available from the Structural Building Component Association (www.sbcscomponents.com)

MiTek®
16023 Swingley Ridge Rd.
Chesterfield, MO 63017
314.434.1200 / MiTek-US.com

Job	Truss	Truss Type	Qty	Ply	AYOUB MARCUS
0526-048	J03B	Jack-Open	4	1	Job Reference (optional) T41656691

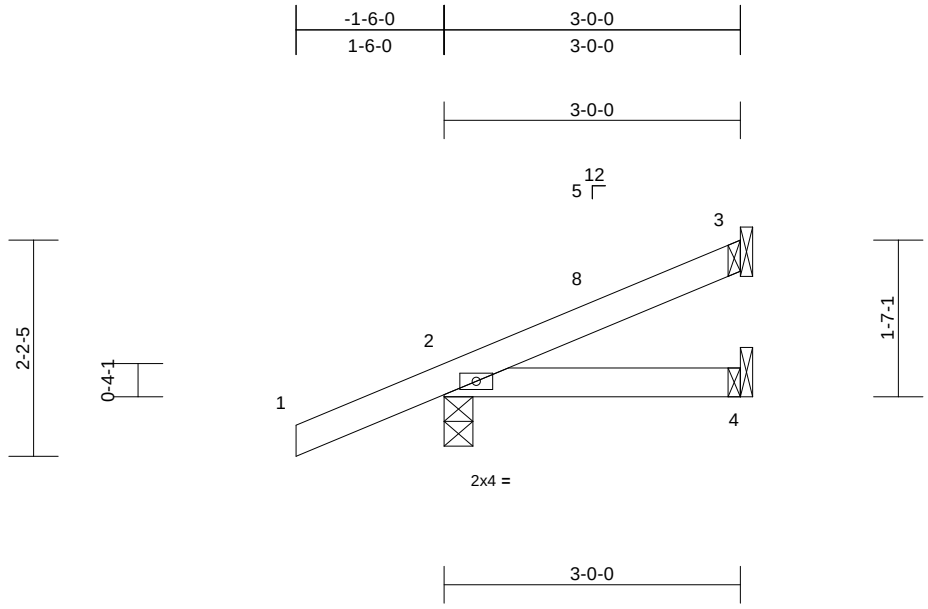

Scale = 1:23.3

Loading	(psf)	Spacing	2-0-0	CSI		DEFL	in	(loc)	l/defl	L/d	PLATES	GRIP
TCLL (roof)	20.0	Plate Grip DOL	1.25	TC	0.14	Vert(LL)	0.00	4-7	>999	240	MT20	244/190
TCDL	10.0	Lumber DOL	1.25	BC	0.07	Vert(CT)	-0.01	4-7	>999	180		
BCLL	0.0*	Rep Stress Incr	YES	WB	0.00	Horz(CT)	0.00	3	n/a	n/a		
BCDL	10.0	Code	FBC2023/TPI2014	Matrix-MP							Weight: 12 lb	FT = 20%

LUMBER
TOP CHORD 2x4 SP No.2
BOT CHORD 2x4 SP No.2

BRACING
TOP CHORD Structural wood sheathing directly applied or 3-0-0 oc purlins.
BOT CHORD Rigid ceiling directly applied or 10-0-0 oc bracing.

REACTIONS (size) 2=0-3-8, 3= Mechanical, 4= Mechanical
Max Horiz 2=64 (LC 12)
Max Uplift 2=-53 (LC 12), 3=-23 (LC 12)
Max Grav 2=230 (LC 1), 3=70 (LC 17), 4=50 (LC 3)

FORCES (lb) - Maximum Compression/Maximum Tension
TOP CHORD 1-2=0/35, 2-3=-90/28
BOT CHORD 2-4=-31/61

NOTES
1) Wind: ASCE 7-22; Vult=130mph (3-second gust) Vasd=101mph; TCDL=6.0psf; BCDL=6.0psf; h=15ft; B=45ft; L=24ft; eave=4ft; Cat. II; Exp B; Partially Enclosed; MWFRS (directional) and C-C Zone3 -1-6-0 to 1-6-0, Zone1 1-6-0 to 2-11-4 zone; cantilever left and right exposed ; end vertical left and right exposed;C-C for members and forces & MWFRS for reactions shown; Lumber DOL=1.60 plate grip DOL=1.60
2) Building Designer / Project engineer responsible for verifying applied roof live load shown covers rain loading requirements specific to the use of this truss component.
3) This truss has been designed for a 10.0 psf bottom chord live load nonconcurrent with any other live loads.
4) * This truss has been designed for a live load of 20.0psf on the bottom chord in all areas where a rectangle 3-06-00 tall by 2-00-00 wide will fit between the bottom chord and any other members.
5) Refer to girder(s) for truss to truss connections.
6) Provide mechanical connection (by others) of truss to bearing plate capable of withstanding 23 lb uplift at joint 3 and 53 lb uplift at joint 2.

LOAD CASE(S) Standard

Julius Lee PE No. 34869
MiTek Inc. DBA MiTek USA FL Cert 6634
16023 Swingley Ridge Rd. Chesterfield, MO 63017
Date:

June 24,2026

WARNING - Verify design parameters and READ NOTES ON THIS AND INCLUDED MITEK REFERENCE PAGE MII-7473 rev. 1/2/2023 BEFORE USE.
Design valid for use only with MiTek® connectors. This design is based only upon parameters shown, and is for an individual building component, not a truss system. Before use, the building designer must verify the applicability of design parameters and properly incorporate this design into the overall building design. Bracing indicated is to prevent buckling of individual truss web and/or chord members only. Additional temporary and permanent bracing is always required for stability and to prevent collapse with possible personal injury and property damage. For general guidance regarding the fabrication, storage, delivery, erection and bracing of trusses and truss systems, see **ANSI/TPI1 Quality Criteria and DSB-22** available from Truss Plate Institute (www.tpinst.org) and **BCSI Building Component Safety Information** available from the Structural Building Component Association (www.sbcscomponents.com)

MiTek®
16023 Swingley Ridge Rd.
Chesterfield, MO 63017
314.434.1200 / MiTek-US.com

Job	Truss	Truss Type	Qty	Ply	AYOUB MARCUS
0526-048	J04	Jack-Open	7	1	T41656692 Job Reference (optional)

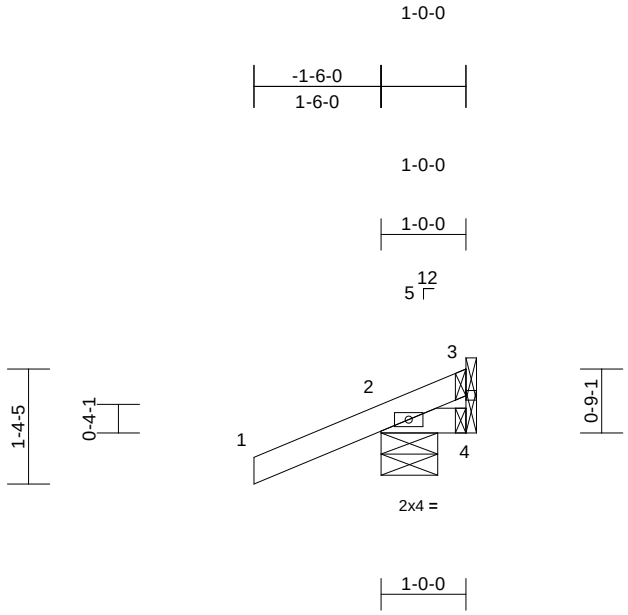

Scale = 1:27.2

Loading	(psf)	Spacing	2-0-0	CSI		DEFL	in	(loc)	l/defl	L/d	PLATES	GRIP
TCLL (roof)	20.0	Plate Grip DOL	1.25	TC	0.14	Vert(LL)	0.00	7	>999	240	MT20	244/190
TCDL	10.0	Lumber DOL	1.25	BC	0.02	Vert(CT)	0.00	7	>999	180		
BCLL	0.0*	Rep Stress Incr	YES	WB	0.00	Horz(CT)	0.00	4	n/a	n/a		
BCDL	10.0	Code	FBC2023/TPI2014	Matrix-MP							Weight: 6 lb	FT = 20%

LUMBER
TOP CHORD 2x4 SP No.2
BOT CHORD 2x4 SP No.2

BRACING
TOP CHORD Structural wood sheathing directly applied or 1-0-0 oc purlins.
BOT CHORD Rigid ceiling directly applied or 10-0-0 oc bracing.

REACTIONS (size) 2=0-8-0, 3= Mechanical, 4= Mechanical
Max Horiz 2=33 (LC 12)
Max Uplift 2=-69 (LC 12), 3=-6 (LC 1), 4=-23 (LC 1)
Max Grav 2=198 (LC 1), 3=11 (LC 12), 4=21 (LC 12)

FORCES (lb) - Maximum Compression/Maximum Tension
TOP CHORD 1-2=0/35, 2-3=-61/43
BOT CHORD 2-4=-47/64

NOTES
1) Wind: ASCE 7-22; Vult=130mph (3-second gust) Vasd=101mph; TCDL=6.0psf; BCDL=6.0psf; h=15ft; B=45ft; L=24ft; eave=4ft; Cat. II; Exp B; Enclosed; MWFRS (directional) and C-C Zone3 zone; cantilever left and right exposed ; end vertical left and right exposed;C-C for members and forces & MWFRS for reactions shown; Lumber DOL=1.60 plate grip DOL=1.60
2) Building Designer / Project engineer responsible for verifying applied roof live load shown covers rain loading requirements specific to the use of this truss component.
3) This truss has been designed for a 10.0 psf bottom chord live load nonconcurrent with any other live loads.
4) * This truss has been designed for a live load of 20.0psf on the bottom chord in all areas where a rectangle 3-06-00 tall by 2-00-00 wide will fit between the bottom chord and any other members.
5) Refer to girder(s) for truss to truss connections.
6) Provide mechanical connection (by others) of truss to bearing plate capable of withstanding 69 lb uplift at joint 2, 23 lb uplift at joint 4 and 6 lb uplift at joint 3.

LOAD CASE(S) Standard

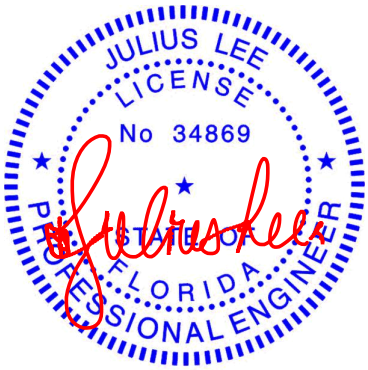

Julius Lee PE No. 34869
MiTek Inc. DBA MiTek USA FL Cert 6634
16023 Swingley Ridge Rd. Chesterfield, MO 63017
Date:

June 24,2026

WARNING - Verify design parameters and READ NOTES ON THIS AND INCLUDED MITEK REFERENCE PAGE MII-7473 rev. 1/2/2023 BEFORE USE.
Design valid for use only with MiTek® connectors. This design is based only upon parameters shown, and is for an individual building component, not a truss system. Before use, the building designer must verify the applicability of design parameters and properly incorporate this design into the overall building design. Bracing indicated is to prevent buckling of individual truss web and/or chord members only. Additional temporary and permanent bracing is always required for stability and to prevent collapse with possible personal injury and property damage. For general guidance regarding the fabrication, storage, delivery, erection and bracing of trusses and truss systems, see **ANSI/TPI1 Quality Criteria and DSB-22** available from Truss Plate Institute (www.tpinst.org) and **BCSI Building Component Safety Information** available from the Structural Building Component Association (www.sbcscomponents.com)

MiTek®
16023 Swingley Ridge Rd.
Chesterfield, MO 63017
314.434.1200 / MiTek-US.com

Job	Truss	Truss Type	Qty	Ply	AYOUB MARCUS
0526-048	J04A	Jack-Open	1	1	T41656693 Job Reference (optional)

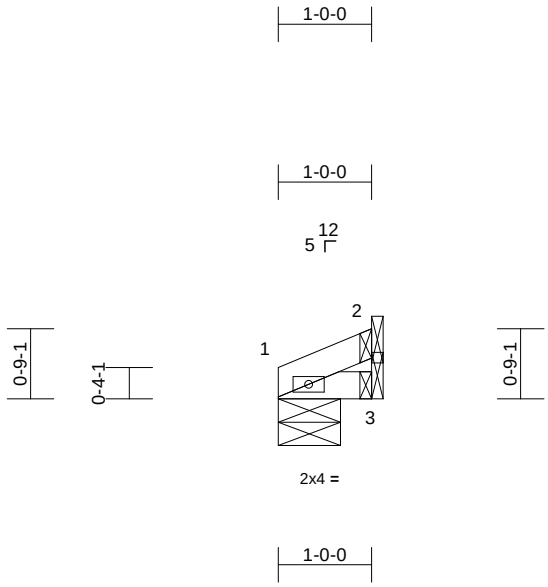

Scale = 1:24.7

Loading	(psf)	Spacing	2-0-0	CSI		DEFL	in	(loc)	l/defl	L/d	PLATES	GRIP
TCLL (roof)	20.0	Plate Grip DOL	1.25	TC	0.01	Vert(LL)	0.00	6	>999	240	MT20	244/190
TCDL	10.0	Lumber DOL	1.25	BC	0.01	Vert(CT)	0.00	4	>999	180		
BCLL	0.0*	Rep Stress Incr	YES	WB	0.00	Horz(CT)	0.00	3	n/a	n/a		
BCDL	10.0	Code	FBC2023/TPI2014	Matrix-MP							Weight: 3 lb	FT = 20%

LUMBER
TOP CHORD 2x4 SP No.2
BOT CHORD 2x4 SP No.2

BRACING
TOP CHORD Structural wood sheathing directly applied or 1-0-0 oc purlins.
BOT CHORD Rigid ceiling directly applied or 10-0-0 oc bracing.

REACTIONS (size) 1=0-8-0, 2= Mechanical, 3= Mechanical
Max Horiz 1=10 (LC 12)
Max Uplift 2=-3 (LC 12)
Max Grav 1=40 (LC 1), 2=21 (LC 1), 3=18 (LC 1)

FORCES (lb) - Maximum Compression/Maximum Tension
TOP CHORD 1-2=-17/7
BOT CHORD 1-3=-7/10

NOTES
1) Wind: ASCE 7-22; Vult=130mph (3-second gust) Vasd=101mph; TCDL=6.0psf; BCDL=6.0psf; h=15ft; B=45ft; L=24ft; eave=4ft; Cat. II; Exp B; Enclosed; MWFRS (directional) and C-C Zone3 zone; cantilever left and right exposed ; end vertical left and right exposed;C-C for members and forces & MWFRS for reactions shown; Lumber DOL=1.60 plate grip DOL=1.60
2) Building Designer / Project engineer responsible for verifying applied roof live load shown covers rain loading requirements specific to the use of this truss component.
3) This truss has been designed for a 10.0 psf bottom chord live load nonconcurrent with any other live loads.
4) * This truss has been designed for a live load of 20.0psf on the bottom chord in all areas where a rectangle 3-06-00 tall by 2-00-00 wide will fit between the bottom chord and any other members.
5) Refer to girder(s) for truss to truss connections.
6) Provide mechanical connection (by others) of truss to bearing plate capable of withstanding 3 lb uplift at joint 2.

LOAD CASE(S) Standard

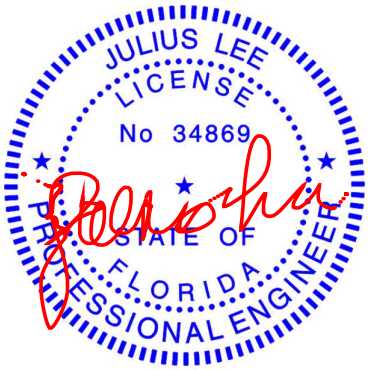

Julius Lee PE No. 34869
MiTek Inc. DBA MiTek USA FL Cert 6634
16023 Swingley Ridge Rd. Chesterfield, MO 63017
Date:

June 24,2026

WARNING - Verify design parameters and READ NOTES ON THIS AND INCLUDED MITEK REFERENCE PAGE MII-7473 rev. 1/2/2023 BEFORE USE.
Design valid for use only with MiTek® connectors. This design is based only upon parameters shown, and is for an individual building component, not a truss system. Before use, the building designer must verify the applicability of design parameters and properly incorporate this design into the overall building design. Bracing indicated is to prevent buckling of individual truss web and/or chord members only. Additional temporary and permanent bracing is always required for stability and to prevent collapse with possible personal injury and property damage. For general guidance regarding the fabrication, storage, delivery, erection and bracing of trusses and truss systems, see **ANSI/TPI1 Quality Criteria and DSB-22** available from Truss Plate Institute (www.tpinst.org) and **BCSI Building Component Safety Information** available from the Structural Building Component Association (www.sbcscomponents.com)

MiTek®
16023 Swingley Ridge Rd.
Chesterfield, MO 63017
314.434.1200 / MiTek-US.com

Job	Truss	Truss Type	Qty	Ply	AYOUB MARCUS
0526-048	J04B	Jack-Open	4	1	T41656694 Job Reference (optional)

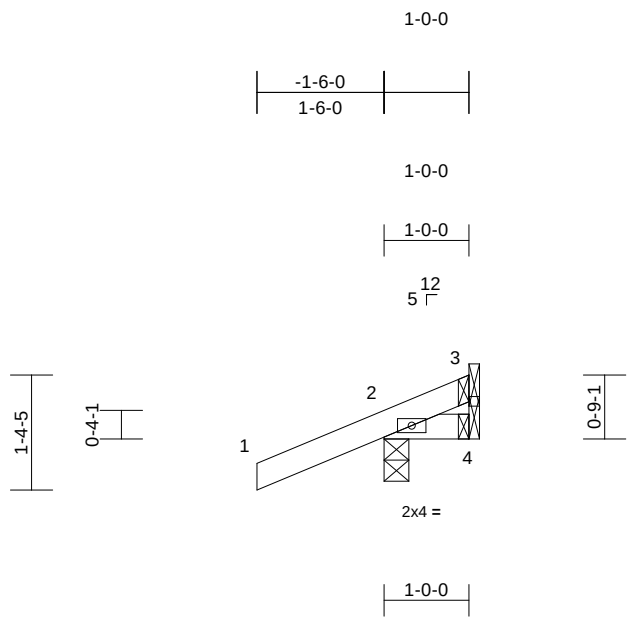

Scale = 1:27.2

Loading	(psf)	Spacing	2-0-0	CSI		DEFL	in	(loc)	l/defl	L/d	PLATES	GRIP
TCLL (roof)	20.0	Plate Grip DOL	1.25	TC	0.14	Vert(LL)	0.00	7	>999	240	MT20	244/190
TCDL	10.0	Lumber DOL	1.25	BC	0.02	Vert(CT)	0.00	7	>999	180		
BCLL	0.0*	Rep Stress Incr	YES	WB	0.00	Horz(CT)	0.00	4	n/a	n/a		
BCDL	10.0	Code	FBC2023/TPI2014	Matrix-MP							Weight: 6 lb	FT = 20%

LUMBER
TOP CHORD 2x4 SP No.2
BOT CHORD 2x4 SP No.2

BRACING
TOP CHORD Structural wood sheathing directly applied or 1-0-0 oc purlins.
BOT CHORD Rigid ceiling directly applied or 10-0-0 oc bracing.

REACTIONS (size) 2=0-3-8, 3= Mechanical, 4= Mechanical
Max Horiz 2=37 (LC 12)
Max Uplift 2=-72 (LC 12), 3=-6 (LC 1), 4=-23 (LC 1)
Max Grav 2=198 (LC 1), 3=8 (LC 12), 4=19 (LC 12)

FORCES (lb) - Maximum Compression/Maximum Tension
TOP CHORD 1-2=0/35, 2-3=-60/43
BOT CHORD 2-4=-47/63

NOTES
1) Wind: ASCE 7-22; Vult=130mph (3-second gust) Vasd=101mph; TCDL=6.0psf; BCDL=6.0psf; h=15ft; B=45ft; L=24ft; eave=4ft; Cat. II; Exp B; Partially Enclosed; MWFRS (directional) and C-C Zone3 zone; cantilever left and right exposed ; end vertical left and right exposed;C-C for members and forces & MWFRS for reactions shown; Lumber DOL=1.60 plate grip DOL=1.60
2) Building Designer / Project engineer responsible for verifying applied roof live load shown covers rain loading requirements specific to the use of this truss component.
3) This truss has been designed for a 10.0 psf bottom chord live load nonconcurrent with any other live loads.
4) * This truss has been designed for a live load of 20.0psf on the bottom chord in all areas where a rectangle 3-06-00 tall by 2-00-00 wide will fit between the bottom chord and any other members.
5) Refer to girder(s) for truss to truss connections.
6) Provide mechanical connection (by others) of truss to bearing plate capable of withstanding 72 lb uplift at joint 2, 23 lb uplift at joint 4 and 6 lb uplift at joint 3.

LOAD CASE(S) Standard

Julius Lee PE No. 34869
MiTek Inc. DBA MiTek USA FL Cert 6634
16023 Swingley Ridge Rd. Chesterfield, MO 63017
Date:

June 24,2026

WARNING - Verify design parameters and READ NOTES ON THIS AND INCLUDED MITEK REFERENCE PAGE MII-7473 rev. 1/2/2023 BEFORE USE.
Design valid for use only with MiTek® connectors. This design is based only upon parameters shown, and is for an individual building component, not a truss system. Before use, the building designer must verify the applicability of design parameters and properly incorporate this design into the overall building design. Bracing indicated is to prevent buckling of individual truss web and/or chord members only. Additional temporary and permanent bracing is always required for stability and to prevent collapse with possible personal injury and property damage. For general guidance regarding the fabrication, storage, delivery, erection and bracing of trusses and truss systems, see **ANSI/TPI1 Quality Criteria and DSB-22** available from Truss Plate Institute (www.tpinst.org) and **BCSI Building Component Safety Information** available from the Structural Building Component Association (www.sbcscomponents.com)

MiTek®
16023 Swingley Ridge Rd.
Chesterfield, MO 63017
314.434.1200 / MiTek-US.com

Symbols

PLATE LOCATION AND ORIENTATION

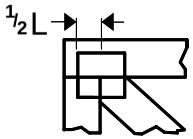

Center plate on joint unless x, y offsets are indicated. Dimensions are in ft-in-sixteenths. Apply plates to both sides of truss and fully embed teeth.

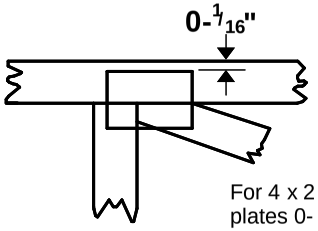

For 4 x 2 orientation, locate plates 0- 1/16" from outside edge of truss.

This symbol indicates the required direction of slots in connector plates.

* Plate location details available in MiTek software or upon request.

PLATE SIZE

4 x 4

The first dimension is the plate width measured perpendicular to slots. Second dimension is the length parallel to slots.

LATERAL BRACING LOCATION

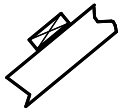

Indicated by symbol shown and/or by text in the bracing section of the output. Use T or I bracing if indicated.

BEARING

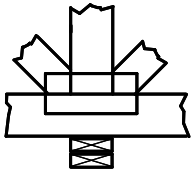

Indicates location where bearings (supports) occur. Icons vary but reaction section indicates joint number/letter where bearings occur. Min size shown is for crushing only.

Industry Standards:

ANSI/TPI1: National Design Specification for Metal Plate Connected Wood Truss Construction.
DSB-22: Design Standard for Bracing.
BCSI: Building Component Safety Information, Guide to Good Practice for Handling, Installing, Restraining & Bracing of Metal Plate Connected Wood Trusses.

Numbering System

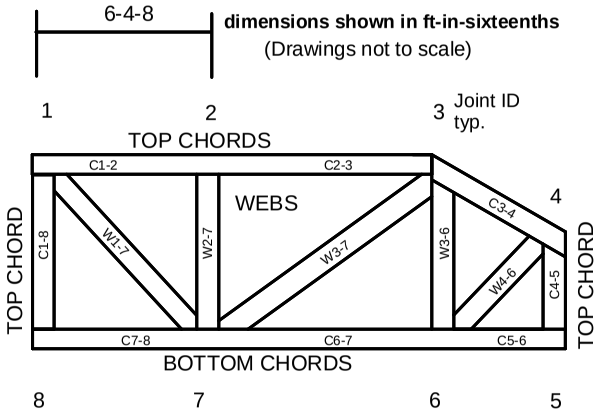

JOINTS ARE GENERALLY NUMBERED/LETTERED CLOCKWISE AROUND THE TRUSS STARTING AT THE JOINT FARTHEST TO THE LEFT.

CHORDS AND WEBS ARE IDENTIFIED BY END JOINT NUMBERS/LETTERS.

Product Code Approvals

ICC-ES Reports:

ESR-1988, ESR-2362, ESR-2685, ESR-3282
ESR-4722, ESL-1388

Design General Notes

Trusses are designed for wind loads in the plane of the truss unless otherwise shown.

Lumber design values are in accordance with ANSI/TPI 1 section 6.3 These truss designs rely on lumber values established by others.

© 2023 MiTek® All Rights Reserved

MiTek®

General Safety Notes

Failure to Follow Could Cause Property Damage or Personal Injury

1. Additional stability bracing for truss system, e.g. diagonal or X-bracing, is always required. See BCSI.
2. Truss bracing must be designed by an engineer. For wide truss spacing, individual lateral braces themselves may require bracing, or alternative Tor I bracing should be considered.
3. Never exceed the design loading shown and never stack materials on inadequately braced trusses.
4. Provide copies of this truss design to the building designer, erection supervisor, property owner and all other interested parties.
5. Cut members to bear tightly against each other.
6. Place plates on each face of truss at each joint and embed fully. Knots and wane at joint locations are regulated by ANSI/TPI 1.
7. Design assumes trusses will be suitably protected from the environment in accord with ANSI/TPI 1.
8. Unless otherwise noted, moisture content of lumber shall not exceed 19% at time of fabrication.
9. Unless expressly noted, this design is not applicable for use with fire retardant, preservative treated, or green lumber.
10. Camber is a non-structural consideration and is the responsibility of truss fabricator. General practice is to camber for dead load deflection.
11. Plate type, size, orientation and location dimensions indicated are minimum plating requirements.
12. Lumber used shall be of the species and size, and in all respects, equal to or better than that specified.
13. Top chords must be sheathed or purlins provided at spacing indicated on design.
14. Bottom chords require lateral bracing at 10 ft. spacing, or less, if no ceiling is installed, unless otherwise noted.
15. Connections not shown are the responsibility of others.
16. Do not cut or alter truss member or plate without prior approval of an engineer.
17. Install and load vertically unless indicated otherwise.
18. Use of green or treated lumber may pose unacceptable environmental, health or performance risks. Consult with project engineer before use.
19. Review all portions of this design (front, back, words and pictures) before use. Reviewing pictures alone is not sufficient.
20. Design assumes manufacture in accordance with ANSI/TPI 1 Quality Criteria.
21. The design does not take into account any dynamic or other loads other than those expressly stated.