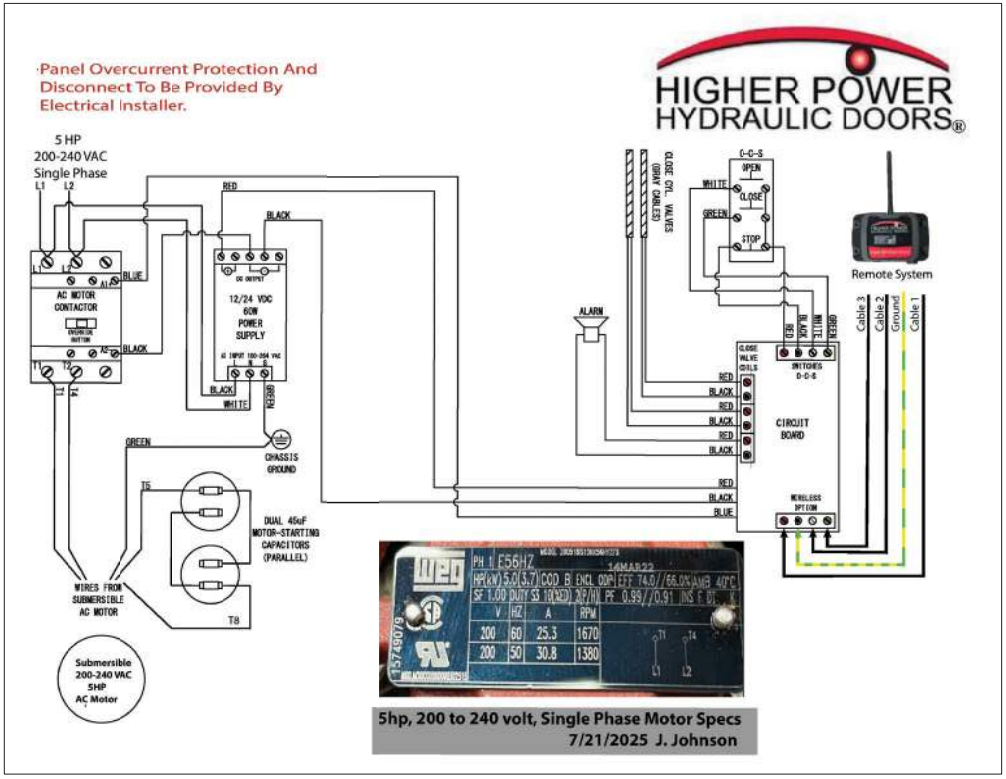

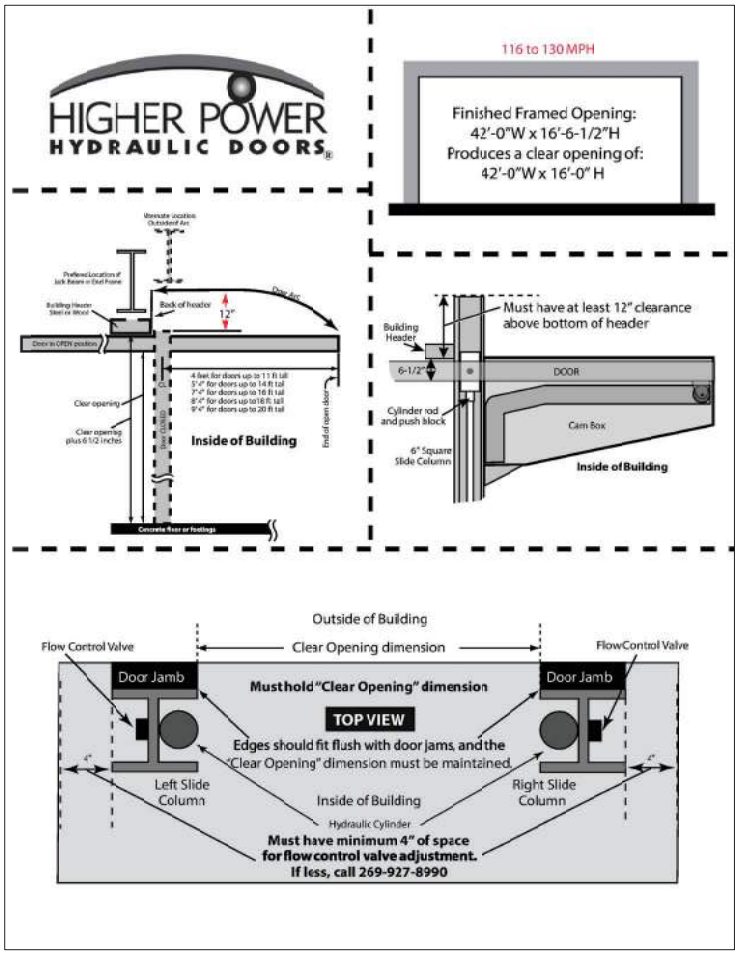

CUSTOM RESIDENCE and AIRCRAFT HANGER for:
DON DOWNS
CANNON CREEK AIRPARK, COLUMBIA COUNTY, FLORIDA
HIGHER POWER HANGER DOOR DETAILS

Celebrating 54 Years of Service
1972 - 2026
N.P. Geisler, Architect
AR0007005

CUSTOM ARCHITECTURAL DESIGN

NICHOLAS PAUL GEISLER ARCHITECT
1758 NW Brown Rd.
Lake City, FL 32055
386-365-4355

Copyright 2026 N.P. Geisler, Architect

DRAWN: rpg

DATE OF ISSUE: 02 FEB 2026

COMM: 2K2604

REVISIONS: 11 MAR 2026

SHEET: A.2

2 OF 7

AR0007005

These drawings, as instruments of service, are the sole property of the architect, and may not be used, copied or reproduced in whole or in part for use on or incorporated within any other job without specific and individual authorization by the architect.

All revised sheets shall supercede any previously issued version(s). Only the latest version shall be employed for this project. All previously issued versions of this sheet SHALL BE DISCARDED.