MARONDA *Homes*

LIVORNO

Elevation-J

Columbia County Building Department
Plans Reviewed for Code Compliance
State of Florida

FOR COUNTY USE ONLY

SCOTT A LEWKOWSKI
LICENSE
No. 78750
STATE OF FLORIDA
PROFESSIONAL ENGINEER

01 / 20 / 2025

This item has been digitally signed and sealed by Scott Allen Lewkowski, P.E. on the date adjacent to the seal.
Printed copies of this document are not considered signed and sealed and the signature must be verified on any electronic copies.
Engineer's S&S is only for the structural portions of the drawings. Any non-structural details or drawings (Electrical, HVAC, Waterproofing, Driveway layout, etc.) are for information only and are not part of the EOR review.

Signing Date: 01/22/2025

To the best of the Engineer's knowledge, information and belief, the structural plans and specifications contained within these drawings comply with the Florida Building Code 8th Edition (2023) Residential. Engineer's signature and seal is only for the structural engineering portions of the drawing pages bearing Engineer's signature and seal.

CA No. 9161 AA26003115

TSG Making Dreams Come True

TOTAL SOLUTIONS GROUP
258 Southhall Lane, Suite 200
Maitland, Florida, 32751
(407) 880 2333

100% Employee Owned
myTSGhome.com

MARONDA Homes
3999 West First Street
Sanford, FL 32771
(407)302-9871

Community: Forest Cove
Plan Name: Livorno
Elev - J
Garage Side: Left
Lot: 6
Block:
Address: TBD SW Cadence Glen Lake City, FL 32024
Renaissance Series
Job no. 9FC00601
Reference No. 25-00449
Sheet: CS
COVER SHEET

REVISIONS

DATE	MARK	DESCRIPTION

CARLOS.DAVILA 1/17/2025

ABBREVIATIONS

A.B.	Anchor Bolt	EXP	Expansion	MGT	Management	Sq.	Square
Abv.	Above	Ext.	Exterior	Micro.	Microwave	Sq Ft	Square Ft.
A/C	Air-Conditioner	Exp.	Expansion	Min	Minimum	STO	Storage
ADJ	Adjustable	FBC	Florida Building Code	ML	Microlam	S.W.	Shear Wall
A.F.F.	Above Finished Floor	FC	Filled Cell	Mir.	Mirror	SYP	Southern Yellow Pine
A.H.U.	Air Handler Unit	F.C.T.	Fiber Cement Trim	Mono	Monolithic	TB	Towel Bar
ALT	Alternate	Fdn.	Foundation	N.T.S.	Not to Scale	Temp.	Tempered
BC	Base Cabinet	F.G.	Fiber Glass	O.E.	Owner's Entry	Thik'n.	Thicken
BF	Bifold Door	FIN	Finished	OHGD	Overhead Garage Door	T.O.F.	Top of Block
Bk Sh	BookShelf	Fin. Flr.	Finished Floor	Opn'g.	Opening	T.O.M.	Top of Masonry
BLK	Block	FIX	Fixed	Opt.	Optional	T.O.P.	Top of Plate
BLW	Below	Flr.	Floor	Pc.	Piece	TP	Toilet Paper Holder
Bm.	Beam	Flr Sys	Floor System	PC	Pull Chain	TR	Towel Ring
Bot.	Bottom	F.O.T.	Face Of Masonry	Ped.	Pedestal	Trans.	Transom Window
B.P.	Bypass door	FP	Fireplace	PH	Phone	TS	Transition Strip
BRG.	Bearing	FR DR	French Door	Pkt.	Pocket	Typ.	Typical
C	Carpet	FRT	Front	PL	Parallam	U.C.	Under Counter
CAB	Cabinet	Ft.	Foot/ Feet	PLF	Pounds per linear foot	UCL	Under Cabinet Lighting
Cir.	Circle	Ftg.	Footing	Plt. Ht.	Plate Height	U.N.O.	Unless Noted Otherwise
CJ	Control Joint	FXD GL	Fixed Glass	Plt. Sh.	Plant Shelf	V	Shower Valves
CL	Coach Light	Galv.	Galvanized	PSF	Pounds per square foot	VB	Vanity Base
Clg.	Ceiling	G.C.	General Contractor	PT	Pressure Treated	Vert.	Vertical
CMU	Concrete Masonry Unit	G.F.C.	Ground Fault Interrupter	PW	Picture Window	VL	Versalam
Coff.	Coffered or Tray Ceiling	GT	Girder Truss	Pwd.	Powder Room	VTR	Vent through Roof/Exterior
Col.	Column	Gyp. Bd.	Gypsum Board	P.W.	Pre-wire	W	Washer
Comm.	Community	HB	Hose Bib	RA	Return Air	w/	With
Comp.	Compressor	HC	Hollow Core	Rad.	Radius	W.A.	Wedge Anchor
COND	Condenser	Hdr.	Header	Rag.	Return Air Grill	WC	Water Closet
CONN.	Connection	Hgt.	Height	Rec.	Recessed	Wd	Wood
Cont.	Continuous	H.H.	Hand Held	Recept.	Receptacle	WDW	Window
CSMT	Casement	HORIZ	Horizontal	Ref.	Refrigerator	WDW HDR	Window Header
CT	Ceramic Tile	HS	Hard Surface Flr.	REINF	Reinforcing	W.H.	Water Heater
D	Dryer	ILO	In Lieu Of	Req'd.	Required	W.I.C.	Walk-in Closet
DB	Door Bell	Insul.	Insulation	Rm.	Room	WM	Wall Mounted
Dbl.	Double	Int.	Interior	Rnd.	Round	WP	Water Proof
DCF	Decorative Cementitious Finish	K/Wall	Kneewall	R.P.	Rough Opening	WS	Water Softener
Dec.	Decorative	KS	Knee Space	R/S	Rod and Shelf	WWM/F	Welded Wire Mesh/Fiber
Ded.	Dedicated (outlet)	Laun.	Laundry	SC	Solid Core		
Dia.	Diameter	Lav.	Lavatory	SD	Smoke Detector		
Disp.	Disposal	LF	Linear Ft.	SGD	Sliding Glass Door		
Dist.	Distance	LL	Lintel Length	Sh.	Shelves		
DMF	Decorative Masonry Finish	LT	Laundry Tub	SHT	Sheet		
D.S.	Drawer Stack	Mas.	Masonry	Shwr.	Shower		
DTL	Detail	Max	Maximum	S.C.	Side Lights		
D.V.	Diverter Valve (Plumbing)	MC	Medicine Cabinet	SPECS	Specifications		
DV	Dryer Vent (Flr. Pln.)	Mfgr.	Manufacturer	SPF	Spruce Pine Fir		
DW	Dishwasher						
Ea.	Each						
Elec.	Electrical						
Elev.	Elevation						
EQ	Equal						
E.W.	Each Way						

NOTICE TO BUILDER & ALL SUB-CONTRACTORS

It is the intent of Designer/Engineer listed in the titleblock of these documents that these documents be accurate, providing Licensed Professionals clear information. Every attempt has been made to prevent error. The Builder and all subcontractors are required to review all the information contained in these documents, prior to the commencement of any work. The Designer/Engineer are not responsible for any plan errors, omissions,or misinterpretations undetected and not reported to the Designer / Engineer prior to construction. All construction MUST be in accordance to the information found in these documents. Any questions regarding the information found in these plans should be directed to our Office at (407) 880-2333 immediately. No backcharges will be considered for reimbursement by the Designer/Engineer without advanced notification and approval by the Designer/Engineer. Payments will be made in accordance to the terms of the agreement.

GENERAL NOTES

1. All exterior walls shall be assumed to be load bearing. See plans for load bearing wall requirements.
2. Window and door suppliers shall provide rough opening info which shall have precedence over the plan.
3. Cabinet Mfrs. shop drawings shall have precedence over the interior cabinet elevations shown.
4. Do not scale plans, dimensions are to be followed as noted. If plans are printed on 11x17 then listed scale is 1/2 as noted.
5. All glass located in hazardous locations shall comply with section R308.4 of the Florida Building Code 8th edition (2023).
6. Dryer vents to be placed behind the dryer location and the maximum allowable exhaust duct length shall be determined by one of the methods specified in sections M1502.4.5.1 through M1502.4.5.3.
7. If water based ceiling texture material is used, provide 1/2" gypsum board for 16" o.c. framing, or 5/8" gypsum board for 24" o.c. framing. note: 1/2" sag-resistant gypsum board may be used i.l.o. of 5/8" gypsum board.
8. Openings from a private garage directly into a room used for sleeping purposes shall not be permitted. Doors between garage and residence shall be equipped with solid doors not less than 1 3/8" in thickness, solid or honeycomb-core steel doors not less than 1 3/8" thick, or 20-minute fire-rated doors.
9. Ducts in the garage and ducts penetrating the walls or ceilings separating the dwelling from the garage shall be constructed of a minimum No. 26 gage (0.48 mm) sheet steel, 1 inch minimum rigid nonmetallic class 0 or class1 duct board, or other approved material and shall have no openings into the garage. Other penetrations shall be protected as required by section R302.11.
10. The garage shall be separated from the dwelling as per the following:
   - From the Residence & Attics - Not Less than 1/2" Gyp. Bd. or equivalent applied to garage side.
   - From Habitable Rooms Above Garage - Not Less than 5/8" Type-X Gyp. Bd. or equivalent.
   - Structure(s) Supporting Floor/Ceiling Assemblies - Not Less than 1/2" Gyp. Bd. or equivalent.
   - Garages Located Less Than 3 Feet From Dwelling On The Same Lot - Not Less than 1/2" Gyp. Bd. or equivalent applied to the interior side of exterior walls that are within this area.
11. Code references are summaries of code sections. See FBCR (current edition) for complete code information.
12. Energy Code Compliance Path is Performance Based path. The Code Cycle is FBC 8th Edition (2023).

Control of Construction Site: The Designer/Architect and engineer of record (EOR) have no control over the construction site and shall not be responsible in any manner for control of the construction site including, but not limited to, scheduling and sequencing of work, jobsite safety, and ventilation of the building and thereby shall not be responsible for the indoor air quality, or the effects thereof, for any reason whatsoever. The Designer/Architect and EOR has no duty to protect, without limitation, the residence, construction site, materials, or equipment, from moisture, mold, fungus, fire, theft, vandalism, trespass, or any other peril or condition, at any time, expressly including, but not limited to, the period of time before construction, during the construction of the project, or after construction and the Designer/Architect and EOR has no duty to take any action or preventive measures to protect such property against any such peril at any time for any reason.

Care and Maintenance: Yearly maintenance and inspections by the builder/homeowner are necessary for the future life of this home. Care must be taken to check windows and doors for caulking, remove leaves and debris off roofs, make sure that water flow is away from the house and have your home repainted every 3 - 5 years to protect the coatings. The designer and engineer of record are not responsible for instances that may occcur over the normal life of the home without proper maintenance.

AREA TABULATION-J

FIRST FLOOR LIVING	3130	SQ.FT.
LIVING TOTAL	3130	SQ.FT.
GARAGE	560	SQ.FT.
FRONT ENTRY	36	SQ.FT.
LANAI	400	SQ.FT.
TOTAL AREA	4126	SQ.FT.

INDEX

DRAWING INDEX

Sheet No.	SHEET TITLE	Sheet No.	SHEET TITLE
CS	Cover Sheet		
1.0	Foundation Plan		
1.1	Foundation Details		
2.0	1st Floor Plan		
3.0	Elevations: Front & Left		
3.1	Elevations: Rear & Right		
4.0	Building Section		
5.0	Framing Plan		
5.1	Strapping Plan		
6.0	Interior Elevations		
7.0	1st Floor Electrical Plan		
8.0	Ceiling Plan		
SN	Structural Notes		
WS-S1	Details		
WS-S2	Details		
SD-1	Details		
WP	Waterproofing		

Windspeed/Exposure Rating
Lot Specific per ASCE/SEI 7-22 140B BFS

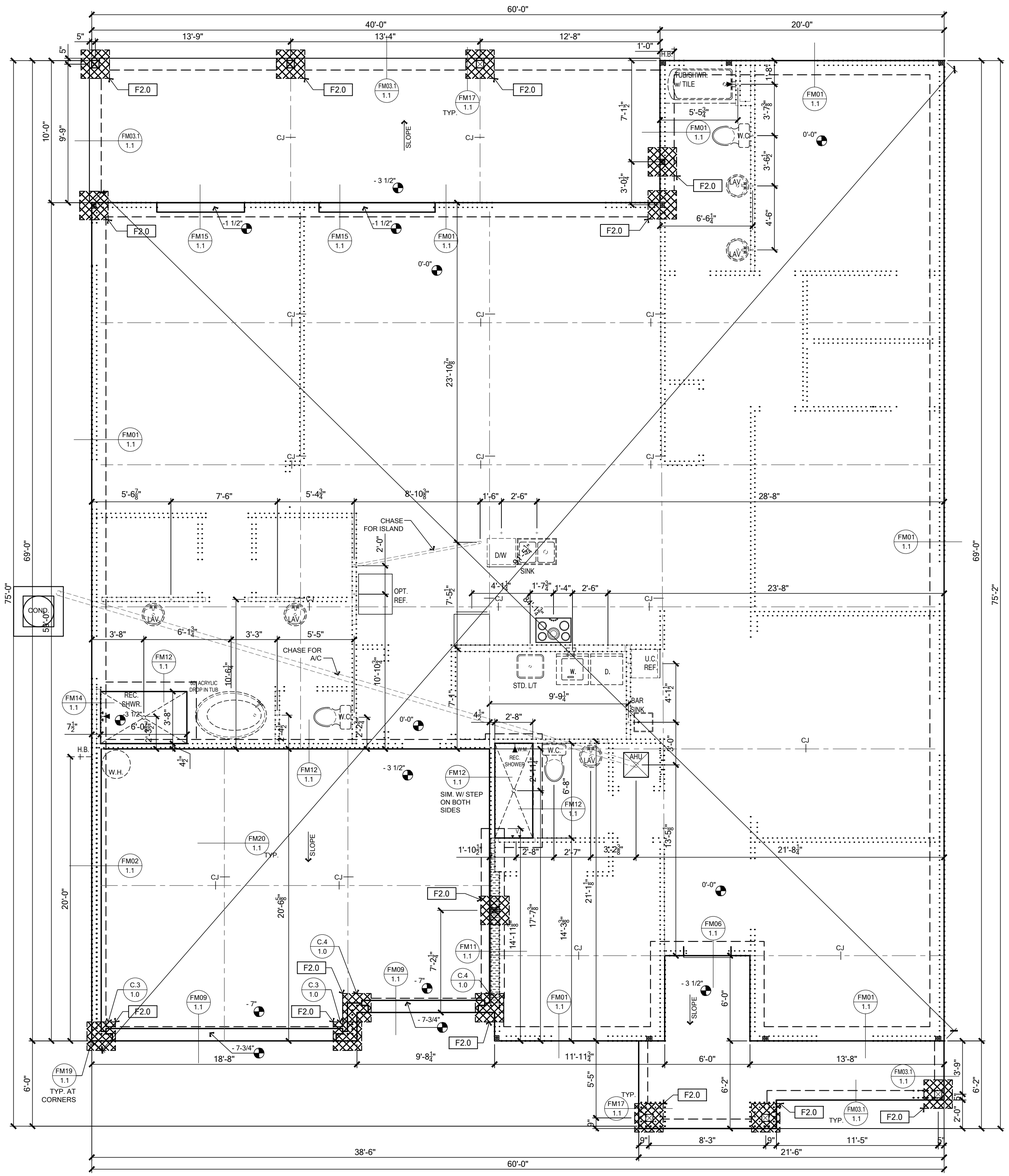

TERMITE SPECIFICATIONS:

SECTION R318 PROTECTION AGAINST TERMITES

GIVEN THAT STRUCTURE IS LOCATED IN A VERY HEAVY TERMITE INFESTATION AREA, TERMITE PROTECTION SHALL BE PROVIDED BY REGISTERED TERMITICIDES, INCLUDING SOIL APPLIED PESTICIDES, BAITING SYSTEMS, AND PESTICIDES APPLIED TO WOOD, OR OTHER APPROVED METHODS OF TERMITE PROTECTION LABELED FOR USE A PREVENTIVE TREATMENT TO NEW CONSTRUCTION (SEE SECTION 202, REGISTERED TERMITICIDE). UPON COMPLETION OF THE APPLICATION OF THE TERMITE PROTECTIVE TREATMENT, A CERTIFICATE OF COMPLIANCE SHALL BE ISSUED TO THE BUILDING DEPARTMENT BY THE LICENSED PEST CONTROL COMPANY THAT CONTAINS THE FOLLOWING STATEMENT: "THE BUILDING HAS RECEIVED A COMPLETE TREATMENT FOR THE PREVENTION OF SUBTERRANEAN TERMITES. TREATMENT IS IN ACCORDANCE WITH RULES AND LAWS ESTABLISHED BY THE FLORIDA DEPARTMENT OF AGRICULTURE AND CONSUMER SERVICES."

NOTE:
1. METHOD OF TREATMENT SHALL BE APPROVED BY THE GOVERNING JURISDICTION "LIQUID BORATE OR BORA-CARE" PRODUCT METHODS MUST BE DETERMINED AT PERMIT STAGE AND PRODUCT APPROVAL DATA MUST BE ON FILE WITH THE BUILDING DEPARTMENT.
2. PRESSURE TREATED LUMBER THAT HAS BEEN CUT OR DRILLED THAT EXPOSES UNTREATED PORTIONS OF WOOD ARE REQUIRED TO BE FIELD TREATED TO PREVENT INSECT INFESTATION.
3. OPTIONAL BORATE APPLIED TO ALL FRAME MEMBERS MIN. 24" A.F.F.

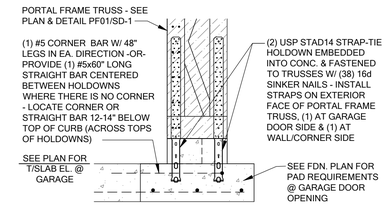

C.3 PORTAL FRAME BASE CONNECTOR DETAIL (2 STRAPS)

SCALE: N.T.S.
REFER TO DETAIL PF01/SD-1 FOR MORE INFO.

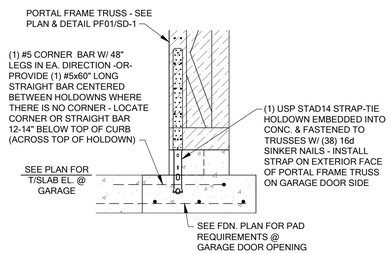

C.4 PORTAL FRAME BASE CONNECTOR DETAIL (1 STRAP)

SCALE: N.T.S.
REFER TO DETAIL PF01/SD-1 FOR MORE INFO.

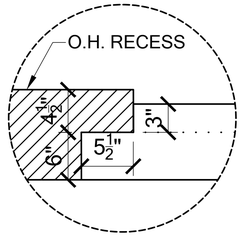

A GARAGE DOOR CURB DETAIL

SCALE: N.T.S.

FOUNDATION SCHEDULE

MARK	SIZE	DEPTH	REINFORCING	GRAVITY CAP. [lbs]
F2.0	2'-0" x 2'-0"	1'-0"	2 #5 E.W. BOT.	7200
F2.5	2'-6" x 2'-6"	1'-0"	3 #5 E.W. BOT.	11000
F3.0	3'-0" x 3'-0"	1'-0"	4 #5 E.W. BOT.	15600

FOUNDATION DEPTH NOTE:
- INTERIOR PAD DEPTHS AS LISTED IN THE SCHEDULE ARE THE TOTAL DEPTH AND MEASURED FROM THE TOP OF THE SLAB.
- EXTERIOR PAD DEPTHS AS LISTED IN THE SCHEDULE ARE TOTAL DEPTH WITH THE BOTTOM OF THE FOOTING TO MATCH THE BOTTOM OF THE CONTINUOUS MONOLITHIC POUR WHICH RUNS THROUGH IT.

GENERAL FOUNDATION NOTES

1 PROVIDE MIN. 6 MIL. APPROVED VAPOR BARRIER. ALL JOINTS TO BE LAPPED MIN. 6" AND SEALED.

2 3-1/2" 2500 PSI CONC. SLAB W/ 6X6 10/10 WWF, OR FIBERMESH /FIBERMIX ADDED TO THE CONCRETE. IN ACCORDANCE W/ MANUF'S INSTRUCTIONS AND NER-284 FOR FIBERMESH OR NER-414 FOR FIBERMIX, OVER 6 MIL VISQUEEN VAPOR BARRIER & TREATED FOR TERMITES.

3 CONSULT W/ MANUFACTURER SPECIFICATIONS PRIOR TO POURING OR RECESSING DOOR SILLS OR SLIDING GLASS DOOR SILLS.

4 EXTERIOR SLABS SHALL SLOPE MIN. 2% OR 1/4" PER FOOT AWAY FROM HOUSE U.N.O. ON PLAN.

5 CONTROL JOINTS (IF SHOWN) ARE NOT REQUIRED BY CODE BUT ARE SUGGESTED (ESPECIALLY WHEN USING FIBER REINF. CONCRETE OR IN EXTERIOR CONDITIONS). CONTROL JOINTS TO BE 1/8" SAW CUT A DEPTH OF 1/4 OF THE THICKNESS OF THE SLAB. FILL CUT W/APPROVED JOINT MATERIAL OR USE ALTERNATE APPROVED METHOD.

6 NO WOOD STAKES PERMITTED IN FOUNDATION.

7 MINIMUM LAP SPLICE FOR ALL FOUNDATION REINFORCING SHALL BE 25". SEE DETAIL FM19/1.1 FOR REINFORCING DETAIL AT FOUNDATION CORNER.

8 PENDING SITE CONDITIONS, FOUNDATION MAY HAVE TO BE STEPPED DOWN. SEE FM18 ON SHEET 1.1 FOR ADDITIONAL INFORMATION. G.C. TO DETERMINE STEP LOCATIONS IF REQUIRED

9 ANY EQUIPMENT AND/OR APPLIANCES HAVING AN IGNITION SOURCE SHALL BE ELEVATED A MIN. OF 18". CONTRACTOR TO PROVIDE SUCH PLATFORM w/ EITHER MASONRY OR WOOD CONSTRUCTION

10 ASSUMED ALLOWABLE SOIL BEARING PRESSURE AFTER COMPACTION: 2000PSF (SEE SOILS REPORT AND SPECIFICATION FOR COMPACTION REQUIREMENTS.) IF SOIL CONDITIONS IN THE PROJECT DO NOT MEET OR EXCEED THE CAPACITY, THE GENERAL CONTRACTOR SHALL CONTACT THE ENGINEER PRIOR TO FOUNDATION POUR FOR VERIFICATION OF FOUNDATION DESIGN. SOIL TO BE FREE OF ORGANIC MATERIAL AND COHESIVE SOILS; COMPACTED IN 12" LIFTS TO AT LEAST OF 95% OF MAX. DRY DENSITY AS DETERMINED BY ASTM1557 (MODIFIED PROCTOR).
THE FOUNDATION SIZES INDICATED IN THESE PLANS HAVE BEEN DESIGNED FOR AN ASSUMED MINIMUM ALLOWABLE SOIL BEARING PRESSURE OF 2,000 PSF.

FOUNDATION LEGEND

	- INDICATES SINGLE-STORY WALL FOUNDATION
	- INDICATES TWO-STORY WALL FOUNDATION
	- INDICATES CONCRETE PAD FOUNDATION

NOTE:
PRIOR TO COMMENCING FOOTER VERIFY WASTE SYSTEM DRAIN LOCATION WITH PLUMBING CONTRACTOR.
SEE DETAIL FM23/1.1 FOR STEM WALL FOUNDATION PENETRATIONS.

FOUNDATION PLAN

SCALE: 3/16 = 1'- 0"

FOR COUNTY USE ONLY

01/20/2025

To the best of the Engineer's knowledge, information and belief, the structural plans and specifications contained within these drawings comply with the Florida Building Code 8th Edition (2023) Residential. Engineer's signature and seal is only for the structural engineering portions of the drawing pages bearing Engineer's signature and seal.

CA No. 9161 AA26003115

TSG Making Dreams Come True
TOTAL SOLUTIONS GROUP
258 Southhall Lane, Suite 200
Maitland, Florida, 32751
(407) 880 2333
100% Employee Owned
myTSGhome.com

MARONDA Homes
3999 West First Street
Sanford, FL 32771
(407)302-9871

Community: Forest Cove
Plan Name: Livorno
Elev - J
Garage Side: Left
Lot: 6
Block:
Address: TBD SW Cadence Glen Lake City, FL 32024
Job no. 9FC00601
Renaissance Series
Reference No. 25-00449
Sheet: 1.0
FOUNDATION

1/17/2025
CARLOS.DAVILA

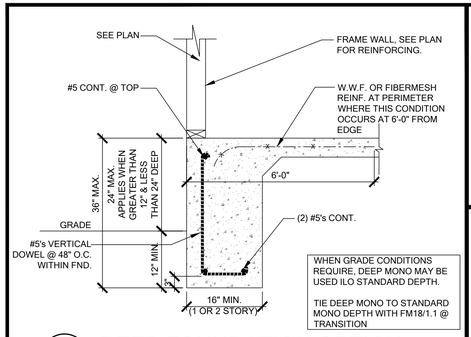

FM01.C DEEP FOUNDATION OPTION
SCALE: N.T.S.

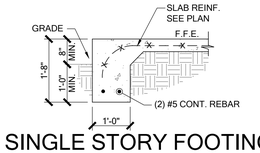

FM01 SINGLE STORY FOOTING
BEARING
SCALE: N.T.S.

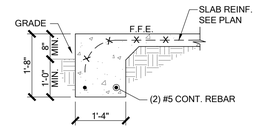

FM08 TWO STORY FOOTING
SCALE: N.T.S.

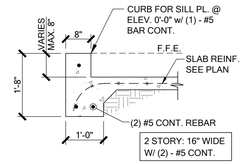

FM02 SECTION @ GARAGE
SCALE: N.T.S.

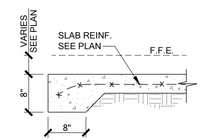

FM03 THICKENED EDGE
SCALE: 3/4"=1'-0"

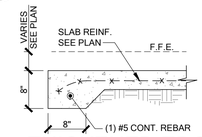

FM03.1 THICKENED EDGE
SCALE: N.T.S.

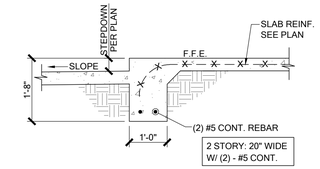

FM06 EXT. DOOR SILL
BEARING
SCALE: N.T.S.

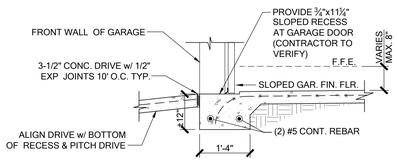

FM09 SLAB RECESS
AT OVERHEAD GARAGE DOOR
SCALE: N.T.S.

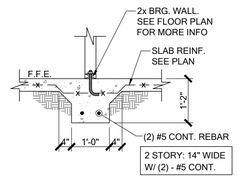

FM10 INT. BRG WALL
(ALSO SHEARWALL)
SCALE: N.T.S.

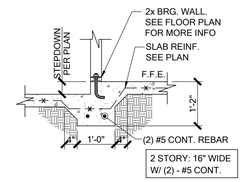

FM11 STEP DOWN BRG.
SCALE: N.T.S.

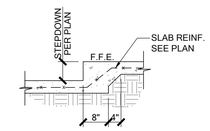

FM12 STEP DOWN NON BRG.
SCALE: N.T.S.

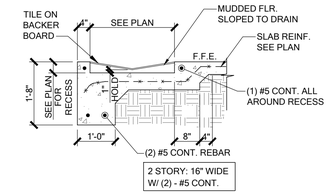

FM14 SECTION @ SHOWER
SCALE: N.T.S.

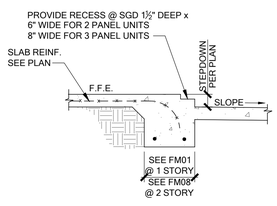

FM15 SL.GL.DR. SILL
BEARING
SCALE: N.T.S.

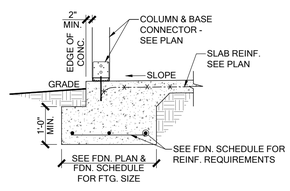

FM17 COLUMN PAD FTG. - MONO
SCALE: N.T.S.

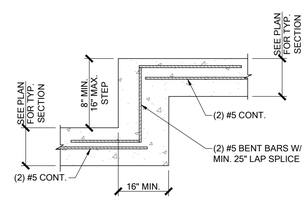

FM18 SECTION
TYPICAL STEP FOOTING
SCALE: N.T.S.

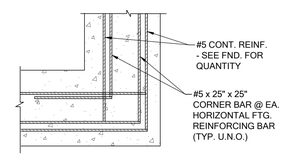

FM19 DETAIL
TYP. CORNER BAR PLAN
SCALE: NO SCALE

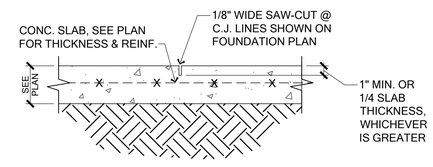

FM20 CONTROL JOINT DETAIL
SCALE: N.T.S.

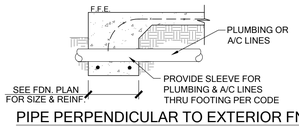

PIPE PERPENDICULAR TO EXTERIOR FND.

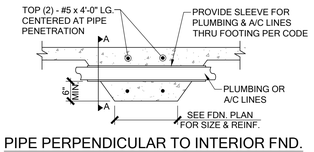

PIPE PERPENDICULAR TO INTERIOR FND.

FM23 DETAIL
TYPICAL FOUNDATION PENETRATIONS
SCALE: N.T.S.

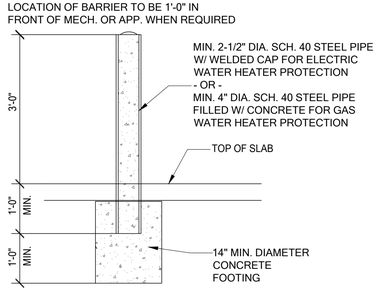

FM24 PROTECTION BARRIER DETAIL
SCALE: N.T.S.

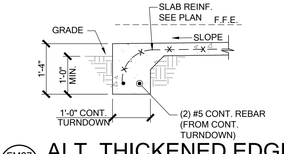

FM27 ALT. THICKENED EDGE
SCALE: N.T.S.

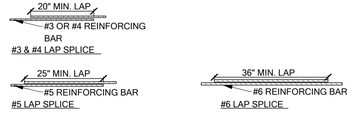

MS05 DETAIL
REBAR SPLICE DETAIL *GRADE 40 U.N.O.
SCALE: N.T.S.

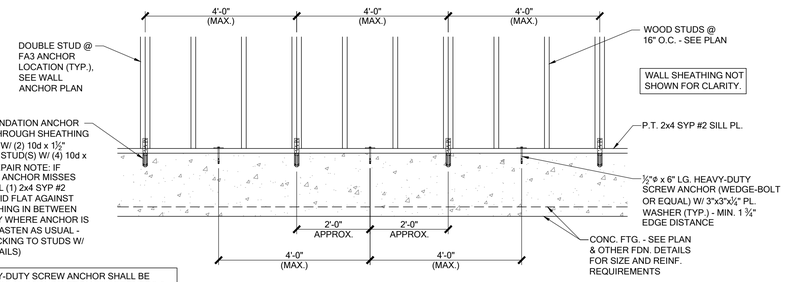

NOTE: HEAVY-DUTY SCREW ANCHOR SHALL BE INSTALLED MIN. 4" / MAX. 12" FROM ALL CORNERS & EITHER SIDE OF 1ST FLOOR WINDOW AND DOOR JAMBS - ANCHORS CAN BE OMITTED IF ANOTHER HOLDOWN ANCHOR IS INSTALLED AT THESE LOCATIONS. MIN. (2) WEDGE ANCHORS OR FOUNDATION ANCHORS SHALL BE INSTALLED IN EVERY SEPARATE PIECE OF SILL PL.

FM30 SILL PLATE FASTENING
SCALE: N.T.S.

FOR COURTESY USE ONLY

01/20/2025

To the best of the Engineer's knowledge, information and belief, the structural plans and specifications contained within these drawings comply with the Florida Building Code 8th Edition (2023) Residential. Engineer's signature and seal is only for the structural engineering portions of the drawing pages bearing Engineer's signature and seal.

CA No. 9161 AA26003115

TSG Making Dreams Come True

TOTAL SOLUTIONS GROUP
258 Southhall Lane, Suite 200
Maitland, Florida, 32751
(407) 880 2333

100% Employee Owned
myTSGhome.com

MARONDA Homes
3999 West First Street
Sanford, FL 32771
(407)302-9871

Community: Forest Cove	Garage Side: Left
Plan Name: Livorno	Elev - J
Lot: 6	Block:
Address: TBD SW Cadence Glen Lake City, FL 32024	
Job no. 9FC00601	Renaissance Series
Reference No. 25-00449	
Sheet: 1.1	

FND. DTLS.

1/17/2025

CARLOS.DAVILA

SEE SHEET 5.0 FOR BEAM SCHEDULE

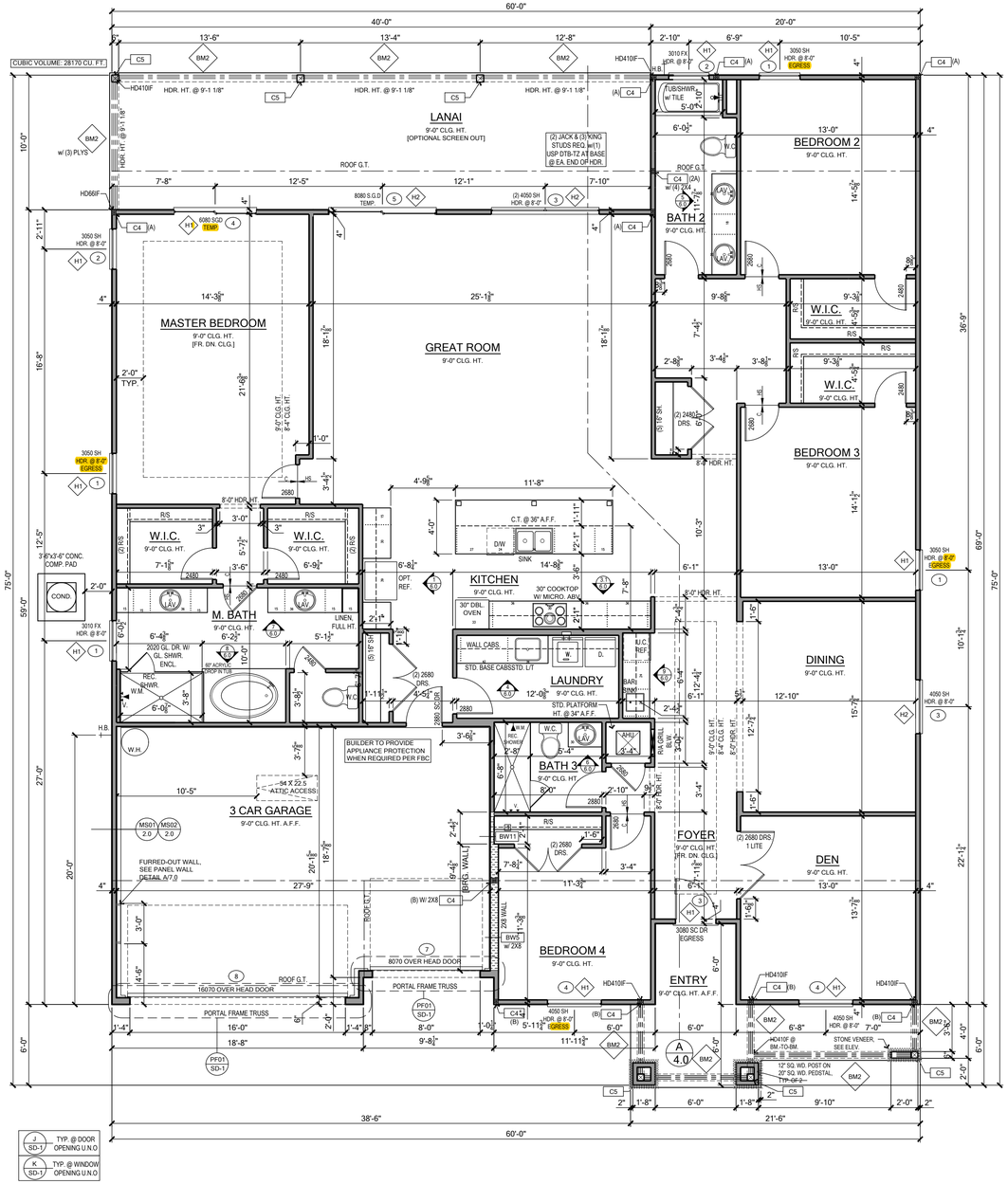

1 SIMILAR w/ (1) STUD UNDER EACH TRUSS AND (1) STUD IN BETWEEN

FLOOR PLAN

SCALE: 3/16" = 1'- 0"

WALL TYPES LEGEND

FRAMING	
	Standard 2x4 Framing
	Standard 2x6 Framing
	Interior Bearing Wall
	Frame Wall Located Below 48" A.F.F. w/ Cap
	Insulated Interior Partition

GENERAL NOTES

NOTE-1: OPTIONAL CROWN MOLDING TO BE INSTALLED ONLY IN THE FOLLOWINGS ROOMS:

- MASTER BEDROOM AND TRAY
- GREAT ROOM AND TRAY*
- LIVING ROOM AND TRAY*
- DINING ROOM AND TRAY*
- KITCHEN (INCLUDING NOOK)
- FLEX/DEN AND TRAY*
- FOYER AND TRAY*

* IF EXISTS IN BASE HOUSE

NOTE-2: 40 MIL PVC SHOWER LINER IS USED FOR ALL SHOWER RECEPTORS PER FBC-R P2709.2

NOTE-3: GLASS & DOOR OPTION ON RECESSED SHOWERS ONLY.

BEARING WOOD WALL SCHEDULE

MARK	STUD SPACING	CONNECTION & FASTENERS TOP	CONNECTION & FASTENERS BOTTOM	LUMBER SPECIES	UPLIFT CAP. [plf]
BW1	---	---	---	---	---
BW2	---	---	---	---	---
BW3	---	---	---	---	---
BW4	16"	(2) 16d TOENAILS	(2) 16d TOENAILS	SYP	NO UPLIFT
BW5	16"	(1) FRAMEFAST FMFF006 SCREW	(1) FRAMEFAST FMFF006 SCREW	SYP	498
BW6	16"	(2) FRAMEFAST FMFF006 SCREWS	(2) FRAMEFAST FMFF006 SCREWS	SYP	998
BW7	---	---	---	---	---
BW8	---	---	---	---	---
BW9	---	---	---	---	---
BW10	12"	(2) 16d TOENAILS	(2) 16d TOENAILS	SYP	NO UPLIFT
BW11	12"	(1) FRAMEFAST FMFF006 SCREW	(1) FRAMEFAST FMFF006 SCREW	SYP	665
BW12	12"	(2) FRAMEFAST FMFF006 SCREWS	(2) FRAMEFAST FMFF006 SCREWS	SYP	1338

DOUBLE 2x HEADER, SEE FLOOR PLAN FOR MIN SIZE. SEE J/SD-1 FOR CONNECTION INFO. IF HEADER IS WITHIN WALL INDICATED ABOVE WITH NO UPLIFT, CONNECTORS INDICATED IN 'J' CAN BE IGNORED.

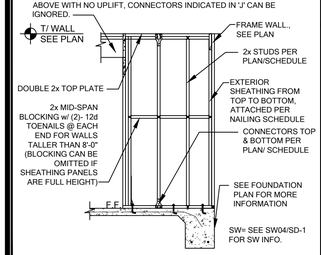

BEARING WALL DETAIL

GENERAL BEARING WALL NOTES

1. SEE FLOOR PLAN FOR WALL SIZE, ASSUME 2x4 STUDS USED UNO.
2. ALL STRUCTURAL LUMBER TO BE SYP #2 UNO ON PLAN.
3. CONNECTIONS TO BE INSTALLED TO EACH STUD AS INDICATED
4. CONTACT E.O.R. IF SP4'S, SP6'S OR SP8'S CONNECTORS ARE SUBSTITUTED, TO VERIFY THEY MEET THE STRUCTURAL REQUIREMENTS.
5. IF "BW" IS INDICATED ON SECOND FLOOR BASE CONNECTION TO BE IGNORED. SEE DETAIL INDICATED IN PLANS FOR PROPER CONNECTIONS FOR 2ND FLOOR TO FIRST FLOOR CONNECTIONS. (NOTE: THIS IS FOR 2 STORY PROJECTS ONLY).
6. ALL 2x EXTERIOR WALLS w/ EXTERIOR SHEATHING ATTACHED PER NAILING SCHEDULE ACT AS SHEARWALLS. SEE PLAN AND WALL SECTIONS FOR STUD SPACING AND GRADE.
7. IF THE BEARING WALL IS INDICATED WITH THE BW1, BW4, BW7, BW10, THESE WALLS ARE ONLY SUPPORTING THE FLOOR LOAD AND DO NOT HAVE UPLIFT, THE STUDS ARE TOE NAILED TO THE PLATE AND THE 2X PLATE CAN BE ATTACHED WITH HARD CASED NAILS (GUN NAILS) AND WILL NOT REQUIRE THE ANCHOR BOLT ATTACHMENT INDICATED IN THE BEARING WALL SCHEDULE.

COLUMN SCHEDULE

MARK	COLUMN SIZE	(BASE) CONN. & FASTENER	UPLIFT(Lb)
C3	(3) 2 x #2 SYP	(4) 16d TOENAILS	NO UPLIFT
C4	(3) 2 x #2 SYP	(A) HT145 w/ 5/8" ATR & (18) 16d X 2-1/2" NAILS	4215
		(B) ATTACH BASE w/ (2) LSTA24	2470
		(C) MSTCM60 w/(24) 10d & (14) 1/4" x 2-1/4" TAPCONS	3660
C5	4 x 4 P.T.#2 SYP POST	PAU44 w/ 5/8" ATR & (12) 16d NAILS	G = 6775 U = 2535
C6	6 x 6 P.T. #2 SYP POST	PAU66 w/ 5/8" ATR & (12) 16d NAILS	G = 16005 U = 2435
C9	4 x 6 P.T.#2 SYP POST	HTT45 W/ 5/8" ATR & (18) 16d NAILS	4215
C11	5.25"X5.25" P.L. 1.8E Fb=2400 (WOLMANIZED IF EXT.)	UPHD8 W/ 7/8" ATR & (24) 1/4"X2-1/2" WS3 WOOD SCREWS	8185

NOTE: P.T. LUMBER USE HOT DIP GALVANIZED OR STAINLESS STEEL CONNECTOR & FASTENERS.

GENERAL COLUMN NOTES

1. SEE FLOOR PLAN FOR WALL WIDTH. STUD PACKS TO MATCH WALL WIDTH UNO.
2. ALL STRUCTURAL LUMBER TO BE SYP#2 UNO ON PLAN.
3. NAIL BUILT UP STUDS PER DETAIL K/SD-1.
4. ALL HOLDOWN ANCHORS SHALL BE EPOXY ANCHORS W/ MINIMUM BOLT EMBEDMENT:
   - 5" EMBEDMENT FOR 1/2" ATR
   - 7" EMBEDMENT FOR 5/8" ATR
   - 8" EMBEDMENT FOR 7/8" ATR
5. SEE WOOD CONSTRUCTION NOTE #4 ON SN SHEET FOR CORROSION INFORMATION

WINDOW SCHEDULE

WINDOW TYPES	SIZE	ROUGH OPN'G	U-Value w/o Grids	SHGC w/o Grids	U-Value w/ Grids	SHGC w/ Grids
2020 SH	23 1/2" X 23 1/2"	24" X 24"	0.33	0.23	0.33	0.21
2024 SH	23 1/2" X 27 1/2"	24" X 28"	0.33	0.23	0.33	0.21
2030 SH	23 1/2" X 35 1/2"	24" X 36"	0.33	0.23	0.33	0.21
2040 SH	23 1/2" X 47 1/2"	24" X 48"	0.33	0.23	0.33	0.21
2050 SH	23 1/2" X 59 3/4"	24" X 60 1/4"	0.33	0.23	0.33	0.21
3030 SH	35 3/4" X 35 1/2"	36 1/4" X 36"	0.33	0.23	0.33	0.21
3040 SH	35 3/4" X 47 1/2"	36 1/4" X 48"	0.33	0.23	0.33	0.21
3050 SH	35 3/4" X 59 3/4"	36 1/4" X 60 1/4"	0.33	0.23	0.33	0.21
3060 SH	35 3/4" X 71"	36 1/4" X 72"	0.33	0.23	0.33	0.21
3450 SH	39 1/2" X 59 3/4"	40" X 60 1/4"	0.33	0.23	0.33	0.21
4030 SH	47 1/2" X 35 1/2"	48" X 36"	0.33	0.23	0.33	0.21
4050 SH	47 1/2" X 59 3/4"	48" X 60 1/4"	0.33	0.23	0.33	0.21
2020 PW	23 1/2" X 23 1/2"	24" X 24"	0.33	0.23	0.31	0.22
3010 PW	36" X 11 1/2"	36 1/4" X 12"	0.33	0.23	0.31	0.22
3012 PW	36" X 13 1/2"	36 1/4" X 14"	0.33	0.23	0.31	0.22
3017 PW	36" X 18 3/4"	36 1/4" X 19"	0.33	0.23	0.31	0.22
3050 PW	35 3/4" X 59 3/4"	36 1/4" X 60 1/4"	0.33	0.23	0.31	0.22
3060 PW	35 3/4" X 71 1/2"	36 1/4" X 72"	0.33	0.23	0.31	0.22
3070 PW	35 1/2" X 83 1/2"	36" X 84"	0.33	0.23	0.31	0.22
4010 PW	47 1/2" X 11 1/2"	48" X 12"	0.33	0.23	0.31	0.22
4020 PW	47 1/2" X 23 1/2"	48" X 24"	0.33	0.23	0.31	0.22
4040 PW	47 1/2" X 47 1/2"	48" X 48"	0.33	0.23	0.31	0.22
4064 PW	47 1/2" X 61 1/2"	48" X 62"	0.33	0.23	0.31	0.22
30 -1/2 ROUND	35 3/4" X 17 7/8"	36 1/4" X 18 3/8"	0.33	0.23	0.31	0.22
(2)-2830 SH	59 1/8" X 35 1/2"	59 5/8" X 36"	0.33	0.23	0.33	0.21
(2)-3030 SH	71 5/8" X 35 1/2"	72 1/8" X 36"	0.33	0.23	0.33	0.21
(2)-3040 SH	71 5/8" X 47 1/2"	72 1/8" X 48"	0.33	0.23	0.33	0.21
(2)-3050 SH	71 5/8" X 59 3/4"	72 1/8" X 60 1/4"	0.33	0.23	0.33	0.21
(2)-3060 SH	71 5/8" X 71 1/2"	72 1/8" X 72	0.33	0.23	0.33	0.21
(2)-4050 SH	95 1/8" X 59 3/4"	95 5/8" X 60 1/4"	0.33	0.23	0.33	0.21
(3)-3050 SH		108"x60 1/4"	0.33	0.23	0.33	0.21

FRAME

SEE MANUFACTURERS DETAILS FOR INSTALLATION AND NUMBER OF FASTENERS PER WINDOW.

DOOR SCHEDULE

ALL DOOR ARE INSWING AND IF YOU NEED OUT SWING -1 3/8" OFF HEIGHT

DOOR TYPE	SIZE	MASONRY OPN'G	FRAME OPN'G
2-0 X 6-8	25 1/2" X 82"	29" X 83 3/4"	26" X 82 1/2"
2-0 X 8-0	25 1/2" X 98"	29" X 99 3/4"	26" X 98 1/2"
2-4 X 6-8	29 1/2" X 82"	33" X 83 3/4"	30" X 82 1/2"
2-4 X 8-0	29 1/2" X 82"	33" X 99 3/4"	30" X 98 1/2"
2-6 X 6-8	31 1/2" X 82"	35" X 83 3/4"	32" X 82 1/2"
2-6 X 8-0	31 1/2" X 98"	35" X 99 3/4"	32" X 98 1/2"
3-0 X 6-8	37 1/2" X 82"	41" X 83 3/4"	38" X 82 1/2"
3-0 X 8-0	37 1/2" X 98"	41" X 99 3/4"	38" X 98 1/2"
3-0 w/(1) SL X 6-8	51 1/8" X 82"	54 1/2" X 83 3/4"	51 1/2" X 82 1/2"
3-0 w/(1) SL X 8-0	51 1/8" X 98"	54 1/2" X 99 3/4"	51 1/2" X 98 1/2"
3-0 w/(2) SL X 6-8	64 1/2 X 82"	68" X 83 3/4"	65" X 82 1/2"
3-0 w/(2) SL X 8-0	64 1/2 X 98"	68" X 99 3/4"	65" X 98 1/2"
3068 DBL. FR. DRS.	75" X 82"	76 1/4" X 83 3/4"	74 3/4"X82 1/2"
3080 DBL. FR. DRS.	75" X 98"	76 1/4" X 99 3/4"	74 3/4"X 98 1/2"
12080 SGD	141 1/8" X 96"	144 5/8" X 97 3/4"	141 5/8" X 96 1/2"
8'0" X 7'0" OHD	96" X 84"	96" X 84"	96" X 84"
16'-0" X 7'-0" OHD	192" X 84"	96" X 84"	96" X 84"

SLIDING GLASS DOORS

DOOR TYPE	SIZE	FRAME OPN'G	U-VALUE	SHGC
5068 SGD	60" X 80"	60 1/2" X 80 1/2"	0.54	0.25
6068 SGD	72" X 80"	72 1/2" X 80 1/2"	0.54	0.25
6080 SGD	72" X 96"	72 1/2" X 96 1/2"	0.54	0.25
8068 SGD	96" X 80"	96 1/2" X 80 1/2"	0.54	0.25
8080 SGD	96" X 96"	96 1/2" X 96 1/2"	0.54	0.25
9068 SGD	106 13/16" X 80"	108 5/16" X 80 1/2"	0.54	0.25
9080 SGD	106 13/16" X 96"	108 5/16" X 96 1/2"	0.54	0.25
12080 SGD	141 1/8" X 96"	141 5/8" X 96 1/2"	0.54	0.25

SEE MANUFACTURES DETAIL FOR INSTALLATION AND # OF FASTNERS PER DOOR.

HEADER SCHEDULE

MARK	HEADER SIZE	REMARKS
H1	(2) - 2X6 #2 SYP W/ 1/2" FLITCH PLATE	SEE NOTE #5
H2	(2) - 2X8 #2 SYP W/ 1/2" FLITCH PLATE	SEE NOTE #5
H3	(2) - 2X10 #2 SYP W/ 1/2" FLITCH PLATE	SEE NOTE #5
H4	(2) - 2X12 #2 SYP W/ 1/2" FLITCH PLATE	SEE NOTE #5
H5	3 1/2" X 7 1/4" GLULAM	(1.6E/Fb=1,500 PSI)

HEADER SUPPORT NO. OF JACKS & STUDS REQ. AT OPENINGS

OPENING SIZE	2x4 WALL JACKS EA END	2x4 WALL KINGS EA END	2x6 OR 2x8 WALL JACKS EA END	2x6 OR 2x8 WALL KINGS EA END
1'-0" - 3'-11"	(1)	(2)	(1)	(2)
>4'-0" BUT <9'-0"	(2)	(3)	(2)	(2)
10'-0" - 16'-0"	(3)	(4)	(3)	(4)

GENERAL HEADER NOTES

1. VERIFY W/ PLAN CORRECT LENGTH OF HEADER REQUIRED
2. IF HEADER IS ON THE 1ST FLOOR, SEE PLAN FOR BEARING WALL TYPE AND FOLLOW INSTRUCTIONS WITHIN BEARING WALL SCHEDULE FOR REQUIRED CORRECTIONS UNO ON PLAN.
3. IF HEADER IS ON THE 2ND FLOOR SEE PLAN FOR INDICATED HEADER CONNECTION FOR REQUIRED CONNECTIONS.
4. ALL HEADER JACK AND KING STUDS SHALL BE FASTENED TO EACH PER DETAIL J/SD-1.
5. FASTEN ALL MULTI-PLY HEADERS TOGETHER W/ (2) ROWS 10d COMMON NAILS AT 8" O.C. ALONG EACH EDGE OR (3) ROWS IF 2x10 OR LARGER.
6. FASTEN ALL HEADERS TO KING STUDS w/ (3) 10d TOENAILS PER SIDE.
7. IF HEADER IS NOT SPECIFIED CONTACT E.O.R.

AREA TABULATION-J

FIRST FLOOR LIVING	3130	SQ.FT.
LIVING TOTAL	3130	SQ.FT.
GARAGE	560	SQ.FT.
FRONT ENTRY	36	SQ.FT.
LANAI	400	SQ.FT.
TOTAL AREA	4126	SQ.FT.

140 MPH OPENING PRESSURES

C&C LOADING - ENCLOSED - EXPOSURE "B" - MEAN ROOF HT.: 1-STORY - 15' AND 2-STORY - 25'

EFFECTIVE WIND AREA (SQ. FT.)	INTERIOR WALL ZONE (4) (MORE THAN 4-FT. FROM BLDG. CORNER)	EXTERIOR WALL ZONE (5) (4-FT., OR CLOSER TO BLDG. CORNER)
0 - 19.99	(1) + 21.2 PSF / - 22.9 PSF	(2) + 21.2 PSF / - 28.3 PSF
20 - 49.99	(3) + 20.2 PSF / - 22.0 PSF	(4) + 20.2 PSF / - 26.4 PSF
50 - 99.99	(5) + 18.9 PSF / - 20.7 PSF	(6) + 18.9 PSF / - 23.9 PSF
SOFFITS (END ZONE)	+ 21.2 PSF / - 22.0 PSF	
GARAGE DOORS	(7) 8070: + 18.5 PSF / - 20.9 PSF	(8) 16070: + 17.7 PSF / - 19.7 PSF

DESIGNATED AREAS WHERE THE ULTIMATE WIND SPEED IS 140 MPH OR GREATER, CONTRACTOR TO PROVIDE ADDITIONAL INFORMATION AS REQUIRED FOR PERMITTING TO INCLUDE IMPACT GLAZING, SHUTTERS, OR WOOD STRUCTURE PANELS PER THE FBCR R301.2.1.2 PROTECTION OF OPENINGS.

FOR COUNTY USE ONLY

01/20/2025

To the best of the Engineer's knowledge, information and belief, the structural plans and specifications contained within these drawings comply with the Florida Building Code 8th Edition (2023) Residential. Engineer's signature and seal is only for the structural engineering portions of the drawing pages bearing Engineer's signature and seal.

CA No. 9161 AA26003115

TSG Making Dreams Come True

TOTAL SOLUTIONS GROUP
258 Southhall Lane, Suite 200
Maitland, Florida, 32751
(407) 880 2333

100% Employee Owned
myTSGhome.com

MARONDA Homes
3969 West First Street
Sanford, FL 32771
(407)302-9871

Community: Forest Cove
Plan Name: Livorno
Elev - J
Garage Side: Left
Renaissance Series
Lot: 6
Block:
Address: TBD SW Cadence Glen Lake City, FL 32024
Job no. 9FC00601
Reference No. 25-00449
Sheet: 2.0
FLOOR PLAN

1/17/2025

CARLOS.DAVILA

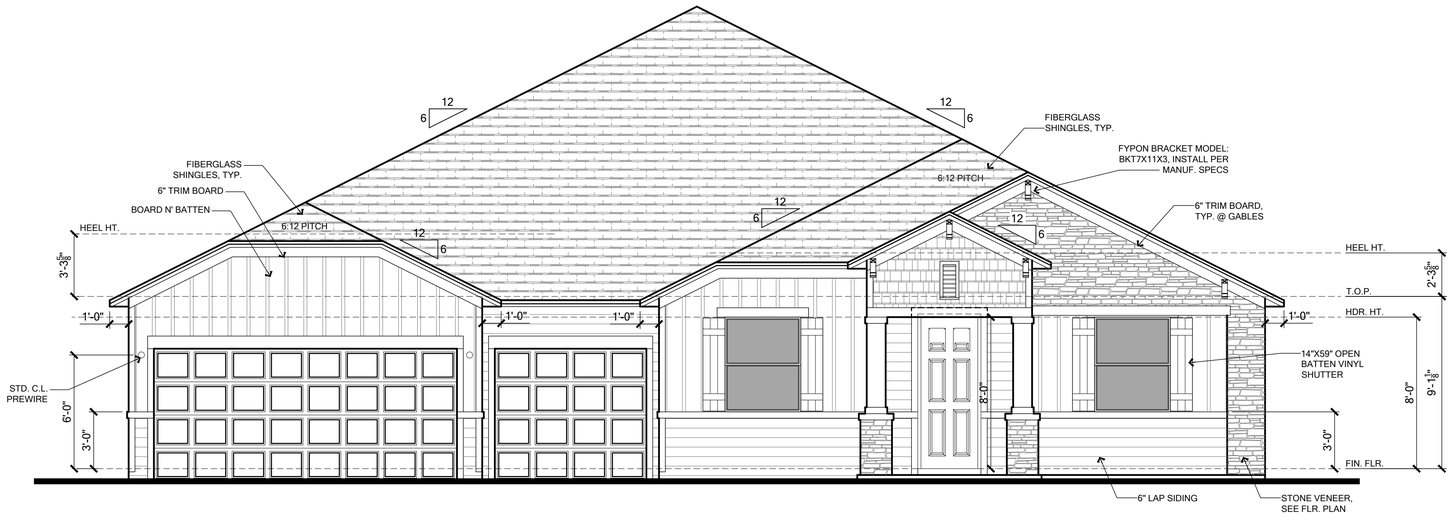

FRONT ELEVATION

SCALE: 1/4" = 1'- 0"

LEFT ELEVATION

SCALE: 1/4" = 1'- 0"

ELEVATION NOTES

EAVE OVERHANG 12" ALUM. FASCIA AND SOFFITS, AND SOFFITS AND GABLE OVERHANG 9" ALUM. FASCIA AND SOFFITS, U.N.O. PLUMB CUT WITH LEVEL RETURNS

Banding/Stucco General Notes
1. Etched Banding typical at Front Elevation.
2. Raised banding to return 1'-0" around corner.
3. Side and Rear elevations to have 4" etched banding unless otherwise noted.
4. When installed with stone/brick veneer increase thickness of banding by 2" typical.

R703.7 Exterior Plaster
Installation of these materials shall be in compliance with ASTM C926, ASTM C1063, or ASTM C1787 and the provisions of this code.

R703.7.1 Lath
Lath and Lath attachments shall be of corrosion-resistant materials. Expanded metal or woven wire lath shall be attached with 1-1/2" long, 11 gage nails having a 7/16" head, or 1-1/2" long, 16 gage staples, spaced in accordance with ASTM C1063 or C1787, or as otherwise approved. (Refer to Sheet SN for the engineered method for Lath attachment.)

Lathing Accessories
Attachments shall be of corrosion-resistant materials. Wood Application: 16 Ga.x1-1/2" long (3/4"-1" crown) staples @ 6" O.C. vertically/horizontally into the framing members. Masonry Application: Concrete stub nail, 3/8" (10 mm) head dia. Min. @ 6" O.C. vertically/horizontally or compatible adhesives, exterior gun-grade, construction adhesive with 1" dabs @ 6" O.C. or in a semi-continuous bead between the solid plaster base and the solid portion of the key attachment flange. Control Joints: Install control joint lathing accessories in conformance with C1063. Lath shall not be continuous through control joints, but shall be stopped and tied at each side. All accessories shall be in accordance with the latest ASTM C1063 & ASTM C1861.

R703.7.2 Plaster
Plastering with cement plaster shall be not less than three coats where applied over any type of code-approved lath and shall be not less than two coats where directly applied over masonry, concrete, clay brick, stone, or tile. If the plaster surface is completely covered by veneer or other facing material or is completely concealed, plaster application need be only two coats, provided total thickness is as set in Table R702.1(1).

Cement plaster shall be in accordance with ASTM C926 and material shall be in accordance with one of the types listed in R703.7.2.

R703.7.3 Water-Resistive Barriers
Water-resistive barriers shall be installed as required in Section R703.2 and, where applied over wood-based sheathing, shall include a water-resistive vapor-permeable barrier with a performance at least equivalent to two layers of Grade D paper. The individual layers shall be installed independently such that each layer provides a separate continuous plane and any flashing (installed in accordance with Section R703.4) intended to drain to the water-resistive barrier is directed between the layers.

R703.2 Water-Resistive Barrier
Not fewer than one layer of water-resistive barrier shall be applied over studs or sheathing of all exterior walls with flashing as indicated in Section R703.4, in such a manner as to provide a continuous water-resistive barrier behind the exterior wall veneer. The water-resistive barrier material shall be continuous to the top of walls and terminated at penetrations and building appendages in a manner to meet the requirements of the exterior wall envelope as described in Section R703.1.
Water-resistive barrier materials shall comply with one of the following:
1. No. 15 felt complying with ASTM D226, Type 1.
2. ASTM E2568, Type 1 or 2.
3. ASTM E331 in accordance with Section R703.11.
4. Other approved materials in accordance with the manufacturer's installation instructions.
   No. 15 asphalt felt and water-resistive barriers complying with ASTM E2556 shall be applied horizontally, with the upper layer lapped over the lower layer not less than 2 inches (51mm), and where joints occur, shall be lapped not less than 6 inches (152 mm).

R703.4 Flashing
Approved metal flashing, vinyl flashing, self-adhered membranes and mechanically attached flexible flashing shall be applied shingle-fashion or in accordance with the manufacturer's instructions. Metal flashing shall be corrosion resistant. Fluid-applied membranes used as flashing shall be applied in accordance with the manufacturer's instructions. All flashing shall be applied in a manner to prevent the entry of water into the wall cavity or penetration of water to the building structural framing components.

Self-adhered membranes used as flashing shall comply with AAMA 711. All exterior fenestration products shall be sealed at the juncture with the building wall with a sealant complying with AAMA 800 or ASTM C920 Class 25 Grade NS or greater for proper joint expansion and contraction, ASTM C1281, AAMA 812, or other approved standard as appropriate for the type of sealant. Fluid-applied membranes used as flashing in exterior walls shall comply with AAMA 714. The flashing shall extend to the surface of the exterior wall finish.

Approved flashings shall be installed at the following locations.
- Exterior window/door openings.
- Intersection of chimneys or other masonry construction with frame walls.
- Under and at the ends of masonry, wood or metal copings and sills.
- Continuously above all projecting wood trim.
- Where exterior porches, decks or stairs attach to a wall or floor assembly of wood-frame construction.
- At wall and roof intersection.
- At Built-in gutters.

R703.12 Adhered Masonry Veneer
Adhered masonry veneer [or stone veneer] -installation shall comply with the requirements of Section R703.7.3 and the requirements in Sections 12.1 and 12.3 of TMS 402/ACI 530/ASCE 5. Adhered masonry veneer shall be installed in accordance with Sections R703.7.1, Article 3.3C of TMS 602/ACI 530.1/ASCE 6 or the manufacturer's instructions.

Coastal Flashings: all flashing material for coastal locations (ex: within 3,000 feet of the ocean) shall be corrosion resistant material (ex: zinc and/or stainless steel) and shall be selected for compatibility with adjacent wood preservatives per the manufacturer's recommendations.

CALCULATIONS BASED ON THE FOLLOWING VALUES
- RIDGE VENTS - 15 SQ. IN. OF NET FREE AREA / LINEAR FT.
- OFF-RIDGE VENTS - 140 SQ. IN. OF NET FREE AREA / UNIT
- SOFFIT VENTS - 14.9 SQ. IN. OF NET FREE AREA / SQ. FT.

	ATTIC SPACE	1/150 Rule			1/300 Rule		
		SQ. IN. of ventilation required	SQ. FT. of vented soffit needed	LF of vented soffit provided	SQ. IN. of ventilation required	SQ. FT. of vented soffit needed	SQ. IN. of ventilation to be provided by upper ventilators
1st FLOOR PLAN	4218	4049.3	271.8	280	2024.6	45.4	1012.3
1/150 Rule used for required ventilation.							

VENTILATION PROVIDED		
	Amt.	Total Ventilation Provided (Sq. Inches)
Off-Ridge Vent (1st Floor)	2	280
Total Ventilation Provided by Upper Ventilators		280
1/150 Rule used; Off-Ridge Vents not part of Calculations		

FOR COUNTY USE ONLY

01/20/2025

To the best of the Engineer's knowledge, information and belief, the structural plans and specifications contained within these drawings comply with the Florida Building Code 8th Edition (2023) Residential. Engineer's signature and seal is only for the structural engineering portions of the drawing pages bearing Engineer's signature and seal.

CA No. 9161 AA26003115

TSG Making Dreams Come True
TOTAL SOLUTIONS GROUP
258 Southhall Lane, Suite 200
Maitland, Florida, 32751
(407) 880 2333
100% Employee Owned
myTSGhome.com

MARONDA Homes
3999 West First Street
Sanford, FL 32771
(407)302-9671

Community: Forest Cove
Plan Name: Livorno
Garage Side: Left
Elev - J
Lot: 6
Address: TBD SW Cadence Glen Lake City, FL 32024
Block:
Job no. 9FC00601
Renaissance Series
Reference No. 25-00449
Sheet: 3.0

ELEVATIONS

1/17/2025

CARLOS.DAVILA

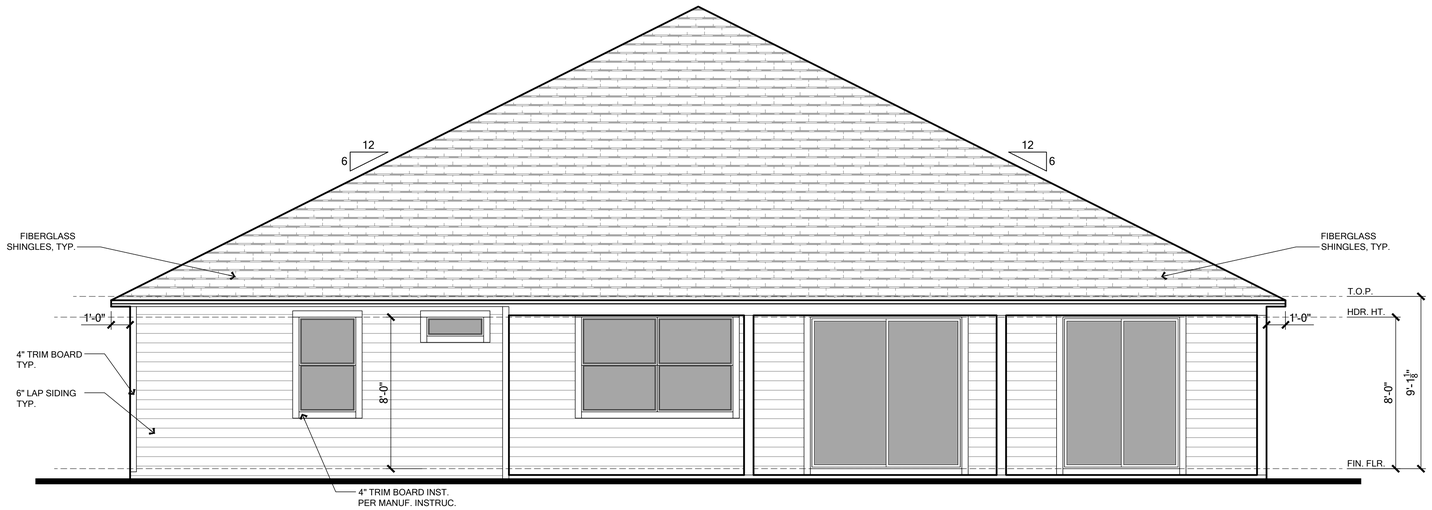

REAR ELEVATION

SCALE: 1/4" = 1'- 0"

RIGHT ELEVATION

SCALE: 1/4" = 1'- 0"

ELEVATION NOTES

EAVE OVERHANG 12" ALUM. FASCIA AND SOFFITS, AND SOFFITS AND GABLE OVERHANG 9" ALUM. FASCIA AND SOFFITS, U.N.O. PLUMB CUT WITH LEVEL RETURNS

Banding/Stucco General Notes
1. Etched Banding typical at Front Elevation.
2. Raised banding to return 1'-0" around corner.
3. Side and Rear elevations to have 4" etched banding unless otherwise noted.
4. When installed with stone/brick veneer increase thickness of banding by 2" typical.

R703.7 Exterior Plaster
Installation of these materials shall be in compliance with ASTM C926, ASTM C1063, or ASTM C1787 and the provisions of this code.

R703.7.1 Lath
Lath and Lath attachments shall be of corrosion-resistant materials. Expanded metal or woven wire lath shall be attached with 1-1/2" long, 11 gage nails having a 7/16" head, or 1-1/2" long, 16 gage staples, spaced in accordance with ASTM C1063 or C1787, or as otherwise approved. (Refer to Sheet SN for the engineered method for Lath attachment.)

Lathing Accessories
Attachments shall be of corrosion-resistant materials. Wood Application: 16 Ga.x1-1/2" long (3/4"-1" crown) staples @ 6" O.C. vertically/horizontally into the framing members. Masonry Application: Concrete stub nail, 3/8" (10 mm) head dia. Min. @ 6" O.C. vertically/horizontally or compatible adhesives, exterior gun-grade, construction adhesive with 1" dabs @ 6" O.C. or in a semi-continuous bead between the solid plaster base and the solid portion of the key attachment flange. Control Joints: Install control joint lathing accessories in conformance with C1063. Lath shall not be continuous through control joints, but shall be stopped and tied at each side. All accessories shall be in accordance with the latest ASTM C1063 & ASTM C1861.

R703.7.2 Plaster
Plastering with cement plaster shall be not less than three coats where applied over any type of code-approved lath and shall be not less than two coats where directly applied over masonry, concrete, clay brick, stone, or tile. If the plaster surface is completely covered by veneer or other facing material or is completely concealed, plaster application need be only two coats, provided total thickness is as set in Table R702.1(1).

Cement plaster shall be in accordance with ASTM C926 and material shall be in accordance with one of the types listed in R703.7.2.

R703.7.3 Water-Resistive Barriers
Water-resistive barriers shall be installed as required in Section R703.2 and, where applied over wood-based sheathing, shall include a water-resistive vapor-permeable barrier with a performance at least equivalent to two layers of Grade D paper. The individual layers shall be installed independently such that each layer provides a separate continuous plane and any flashing (installed in accordance with Section R703.4) intended to drain to the water-resistive barrier is directed between the layers.

R703.2 Water-Resistive Barrier
Not fewer than one layer of water-resistive barrier shall be applied over studs or sheathing of all exterior walls with flashing as indicated in Section R703.4, in such a manner as to provide a continuous water-resistive barrier behind the exterior wall veneer. The water-resistive barrier material shall be continuous to the top of walls and terminated at penetrations and building appendages in a manner to meet the requirements of the exterior wall envelope as described in Section R703.1.
Water-resistive barrier materials shall comply with one of the following:
1. No. 15 felt complying with ASTM D226, Type 1.
2. ASTM E2568, Type 1 or 2.
3. ASTM E331 in accordance with Section R703.11.
4. Other approved materials in accordance with the manufacturer's installation instructions.
   No. 15 asphalt felt and water-resistive barriers complying with ASTM E2556 shall be applied horizontally, with the upper layer lapped over the lower layer not less than 2 inches (51mm), and where joints occur, shall be lapped not less than 6 inches (152 mm).

R703.4 Flashing
Approved metal flashing, vinyl flashing, self-adhered membranes and mechanically attached flexible flashing shall be applied shingle-fashion or in accordance with the manufacturer's instructions. Metal flashing shall be corrosion resistant. Fluid-applied membranes used as flashing shall be applied in accordance with the manufacturer's instructions. All flashing shall be applied in a manner to prevent the entry of water into the wall cavity or penetration of water to the building structural framing components.

Self-adhered membranes used as flashing shall comply with AAMA 711. All exterior fenestration products shall be sealed at the juncture with the building wall with a sealant complying with AAMA 800 or ASTM C920 Class 25 Grade NS or greater for proper joint expansion and contraction, ASTM C1281, AAMA 812, or other approved standard as appropriate for the type of sealant. Fluid-applied membranes used as flashing in exterior walls shall comply with AAMA 714. The flashing shall extend to the surface of the exterior wall finish.

Approved flashings shall be installed at the following locations.
- Exterior window/door openings.
- Intersection of chimneys or other masonry construction with frame walls.
- Under and at the ends of masonry, wood or metal copings and sills.
- Continuously above all projecting wood trim.
- Where exterior porches, decks or stairs attach to a wall or floor assembly of wood-frame construction.
- At wall and roof intersection.
- At Built-in gutters.

R703.12 Adhered Masonry Veneer
Adhered masonry veneer [or stone veneer] -installation shall comply with the requirements of Section R703.7.3 and the requirements in Sections 12.1 and 12.3 of TMS 402/ACI 530/ASCE 5. Adhered masonry veneer shall be installed in accordance with Sections R703.7.1, Article 3.3C of TMS 602/ACI 530.1/ASCE 6 or the manufacturer's instructions.

Coastal Flashings: all flashing material for coastal locations (ex: within 3,000 feet of the ocean) shall be corrosion resistant material (ex: zinc and/or stainless steel) and shall be selected for compatibility with adjacent wood preservatives per the manufacturer's recommendations.

CALCULATIONS BASED ON THE FOLLOWING VALUES
- RIDGE VENTS - 15 SQ. IN. OF NET FREE AREA / LINEAR FT.
- OFF-RIDGE VENTS - 140 SQ. IN. OF NET FREE AREA / UNIT
- SOFFIT VENTS - 14.9 SQ. IN. OF NET FREE AREA / SQ. FT.

	ATTIC SPACE	1/150 Rule			1/300 Rule		
		SQ. IN. of ventilation required	SQ. FT. of vented soffit needed	LF of vented soffit provided	SQ. IN. of ventilation required	SQ. FT. of vented soffit needed	SQ. IN. of ventilation to be provided by upper ventilators
1st FLOOR PLAN	4218	4049.3	271.8	280	2024.6	45.4	1012.3
1/150 Rule used for required ventilation.							

VENTILATION PROVIDED		
	Amt.	Total Ventilation Provided (Sq. Inches)
Off-Ridge Vent (1st Floor)	2	280
Total Ventilation Provided by Upper Ventilators		280
1/150 Rule used; Off-Ridge Vents not part of Calculations		

FOR COUNTY USE ONLY

01/20/2025

To the best of the Engineer's knowledge, information and belief, the structural plans and specifications contained within these drawings comply with the Florida Building Code 8th Edition (2023) Residential. Engineer's signature and seal is only for the structural engineering portions of the drawing pages bearing Engineer's signature and seal.

CA No. 9161 AA26003115

TSG Making Dreams Come True
TOTAL SOLUTIONS GROUP
258 Southhall Lane, Suite 200
Maitland, Florida, 32751
(407) 880 2333
100% Employee Owned
myTSGhome.com

MARONDA Homes
3999 West First Street
Sanford, FL 32771
(407)302-9671

Garage Side: Left
Elev - J
Renaissance Series
Community: Forest Cove
Plan Name: Livorno
Block:
Lot: 6
Address: TBD SW Cadence Glen Lake City, FL 32024
Job no. 9FC00601
Reference No. 25-00449
Sheet: 3.1

ELEVATIONS

1/17/2025

CARLOS.DAVILA

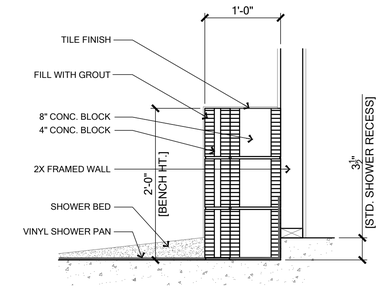

SHOWER BENCH DETAIL (B/4.0)

SCALE: 1/2" = 1'- 0"

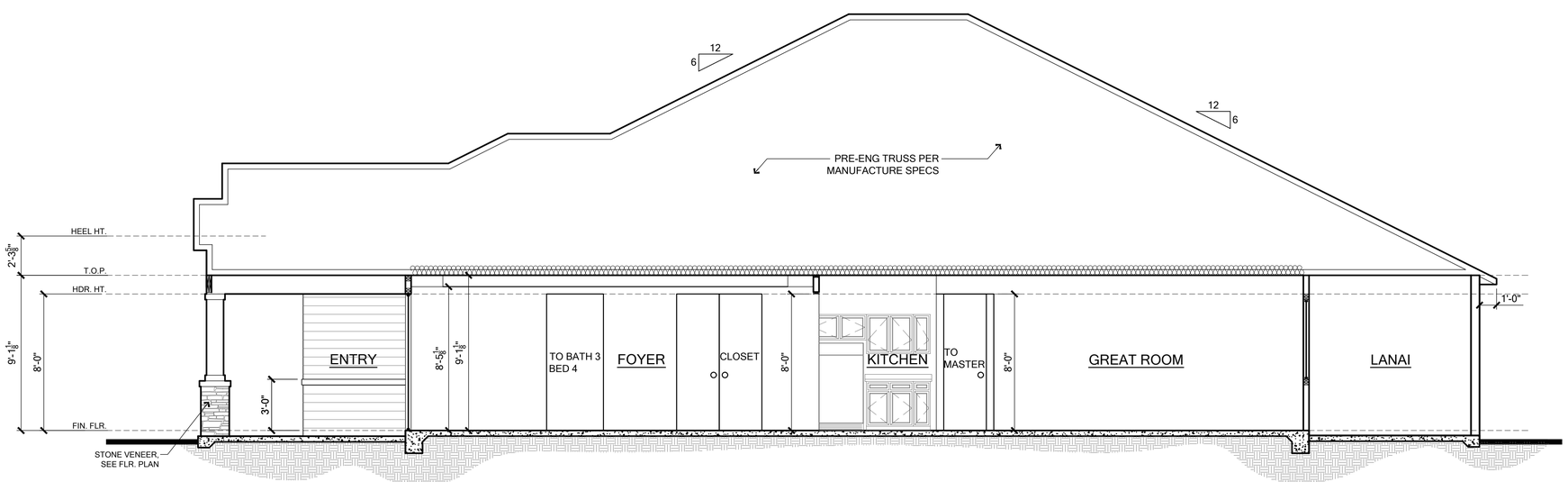

BUILDING SECTION (A/4.0)

SCALE: 1/4" = 1'- 0"

FOR COUNTY USE ONLY

01/20/2025

To the best of the Engineer's knowledge, information and belief, the structural plans and specifications contained within these drawings comply with the Florida Building Code 8th Edition (2023) Residential. Engineer's signature and seal is only for the structural engineering portions of the drawing pages bearing Engineer's signature and seal.

CA No. 9161 AA26003115

TOTAL SOLUTIONS GROUP
258 Southhall Lane, Suite 200
Maitland, Florida, 32751
(407) 880 2333

100% Employee Owned
myTSGhome.com

MARONDA Homes
3999 West First Street
Sanford, FL 32771
(407)302-9671

Community: Forest Cove
Plan Name: Livorno
Elev - J
Garage Side: Left
Block:
Lot: 6
Address: TBD SW Cadence Glen
Lake City, FL 32024
Job no. 9FC00601
Renaissance Series

Reference No. 25-00449

Sheet: 4.0

BLDG. SECTION

CARLOS.DAVILA 1/17/2025

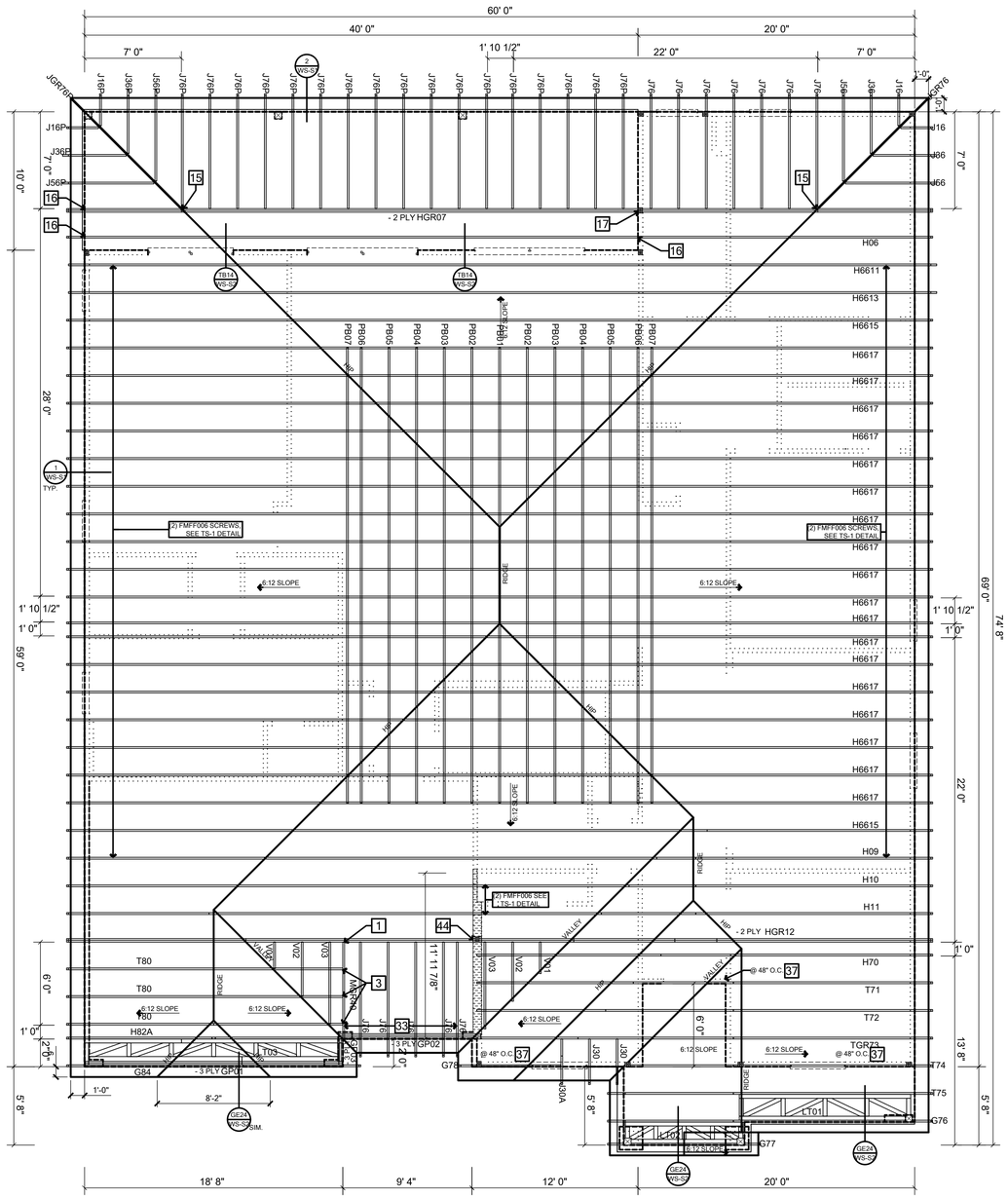

FRAMING PLAN

SCALE: 3/16" = 1'- 0"

BEAM SCHEDULE

MARK	BEAM SIZE	CONNECTIONS
BM1	(2) - 2 x 8 #2 SYP W/ 7/16" OSB FLITCH PLATE. NAIL BEAM TOGETHER USING (2) ROWS OF 12d NAILS @ 12" O.C. TYP EACH SIDE	PROVIDE (2) USP MSTA18 OR (2) USPHTW24 TO WOOD POST OR (2) USPTA18 TO CMU COL. U.N.O. ON ROOF OR FLOOR PLAN
BM2	(2) - 2 x 10 #2 SYP W/ 7/16" OSB FLITCH PLATE. NAIL BEAM TOGETHER USING (2) ROWS OF 12d NAILS @ 12" O.C. TYP EACH SIDE	PROVIDE (2) USP MSTA18 OR (2) USPHTW24 TO WOOD POST OR (2) USPTA18 TO CMU COL. U.N.O. ON ROOF OR FLOOR PLAN
BM3	(2) - 2 x 12 #2 SYP W/ 7/16" OSB FLITCH PLATE. NAIL BEAM TOGETHER USING (2) ROWS OF 12d NAILS @ 12" O.C. TYP EACH SIDE	PROVIDE (2) USP MSTA18 OR (2) USPHTW24 TO WOOD POST OR (2) USPTA18 TO CMU COL. U.N.O. ON ROOF OR FLOOR PLAN
BM4	3 ½" x 9 ¼" GLULAM (1.9E / Fb=2,400 PSI)	PROVIDE (2) USP MSTA18 OR (2) USPHTW24 TO WOOD POST OR (2) USPTA18 TO CMU COL. U.N.O. ON ROOF OR FLOOR PLAN
BM5	3 ½" x 11 ¼" GLULAM (1.9E / Fb=2,400 PSI)	PROVIDE (2) USP MSTA18 OR (2) USPHTW24 TO WOOD POST OR (2) USPTA18 TO CMU COL. U.N.O. ON ROOF OR FLOOR PLAN
BM6	3 ½" x 16" GLULAM (1.9E / Fb=2,400 PSI)	PROVIDE (2) USP MSTA18 OR (2) USPHTW24 TO WOOD POST OR (2) USPTA18 TO CMU COL. U.N.O. ON ROOF OR FLOOR PLAN
BM7	5 ½" x 16" GLULAM (1.9E / Fb=2,400 PSI)	PROVIDE (2) USP MSTA18 OR (2) USPHTW24 TO WOOD POST OR (2) USPTA18 TO CMU COL. U.N.O. ON ROOF OR FLOOR PLAN
BM8	3 ½" x 14" GLULAM (1.9E / Fb=2,400 PSI)	PROVIDE (2) USP MSTA18 OR (2) USPHTW24 TO WOOD POST OR (2) USPTA18 TO CMU COL. U.N.O. ON ROOF OR FLOOR PLAN

GENERAL BEAM NOTES

1. VERIFY WITH PLAN CORRECT LENGTH OF BEAMS REQUIRED (MIN 4" BEARING EACH END)
2. SEE PLAN FOR TOP OR BOTTOM OF BEAM INDICATIONS
3. BEAMS ARE NOT TO BE DRILLED OR NOTCHED IN ANY WAY WITHOUT WRITTEN APPROVAL FROM THE E.O.R.

TYPICAL TRUSS CONNECTION

U.N.O. ON ROOF FRAMING PLAN

- TRUSS TO WOOD FRAMING: (1) 6" LG. FRAMEFAST FMFFOO6 TRUSS SCREW w/ (2) 10d TOENAILS

JACK TRUSSES TO GIRDER TRUSS SHALL BE NAILED TOP/BOTTOM CHORD. FOR VALLEY SET TRUSSES, SEE ENGINEERING TRUSS PACKAGE FOR CORRECT CONNECTION [VC1]

ROOF FRAMING NOTES

SHINGLE, METAL OR TILE ROOFING SYSTEM (SEE ARCH.) OVER APPROVED UNDERLAYMENT, OVER SHEATHING PER ENGINEERED ROOF SPECIFICATIONS (SEE FRAMING PLAN) ON PRE-ENGINEERED WOOD TRUSSES AT 2'-0" O.C. MAX OR CONVENTIONAL FRAME ROOF. (SEE PLAN FOR SIZE, SPACING, TYPICAL ROOF SLOPE, AND OTHER INFORMATION)

ATTN: BUILDING DEPARTMENT

PLEASE NOTE THAT TRUSS LABELS MAY VARY BUT, IF THE TRUSS LAYOUT SHOWN DOES NOT MATCH THE TRUSS MANUFACTURERS LAYOUT PLEASE CONTACT THE ENGINEER OF RECORD PRIOR TO PLACEMENT OF ANY TRUSSES.

DRAFTSTOPPING DETAIL

R302.6 THE GARAGE SHALL BE SEPARATED FROM THE RESIDENCE AND ITS ATTIC BY NOT LESS THAN 1/2-INCH (12.7MM) GYPSUM BOARD APPLIED TO THE GARAGE SIDE. GARAGE BENEATH ROOMS SHALL BE SEPARATED FROM ALL HABITABLE ROOMS ABOVE BY NOT LESS THAN 5/8-INCH (15.9MM) TYPE X GYPSUM BOARD OR EQUIVALENT. WHERE THE SEPARATION IS A FLOOR CEILING ASSEMBLY, THE STRUCTURE SUPPORTING THE SEPARATION SHALL ALSO BE PROTECTED BY NOT LESS THAN 1/2-INCH (12.7MM) GYPSUM BOARD OR EQUIVALENT.

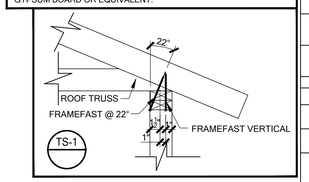

USP HARDWARE 160% 61ST EDITION CATALOG					REV FOR 8TH EDITION FLORIDA CODE
MARK	PRODUCT CODE	REF. NO.	FASTENERS	UPLIFT	ROOF 115%
HANGERS FOR TRUSS TO TRUSS CONECTION					DATE: 12-21-23
1	HUS 26	HUS26	HEADER: (14) 16d TRUSS: (6) 16d	2045	3140
2	HUS 28	HUS28	HEADER: (22) 16d TRUSS: (8) 16d	2990	4745
3	JUS 26	LUS26	HEADER: (4) 10d TRUSS: (4) 10d	1050	1000
12	THD 28-2	HTU28-2	HEADER: (28) 16d TRUSS: (16) 10d X 1-1/2"	2595	4560
13	THDH 28-3	HGUS28-3	HEADER: (36) 16d TRUSS: (12) 10d X 1-1/2"	4345	8175
14	THD 48	HHUS48	HEADER: (28) 16d TRUSS: (16) 10d X 1-1/2"	2595	4860
15	HJC26	THJU26	HIP: (5) 10d HEADER: (16) 16d JACK: (7) 10d	2345	3055
28	HJC26 - SK60	LTHJA26, THJA26, THJU26	HIP: (5) 10d HEADER: (16) 16d JACK: (7) 10d	2345	3055
60	HUS179	HUS1.81/10	HEADER: (30) 16d TRUSS: (10) 16d	4110	6060
71	HD410	HU410	HEADER: (20) 16d TRUSS: (10) 10d	1950	3475
72	THD210-3	HHUS210-3	HEADER: (38) 16d TRUSS: (20) 10d	4035	7255
73	HD48 IF	HU48	HEADER: (14) 3/16 X 1-3/4" CMU; (14) 16d FRM JOIST/BEAM; (8) 10d	2430	1170
74	HD410 IF	HU410	HEADER: (20) 3/16 X 1-3/4" CMU; (20) 16d FRM JOIST/BEAM; (10) 10d	3475	1950
75	LGUM410	LGUM410-SDS	SOLID POUR CMU: (8) 3/4 X 4" JOIST/BEAM; (8) WS3 SCREWS	3350	9905
76	HD26-2 IF	HU26-2	HEADER: (14) 3/16 X 1-3/4" CMU; (14) 16d FRM JOIST/BEAM; (6) 10d	1170	2430
CONNECTORS FOR TRUSS TO WALL					
N	16d NAILS - (2) TOP CHORD NAILS / (2) BOTTOMCHORD NAILS				
	6" LONG TRUSS SCREW	FMFF006 SDWC 15600	FASTEN MASTER FRAMEFAST SIMPSON STRONG DRIVE	690 / 2-1105 615	NA
	(2) 6" LONG TRUSS SCREW	FMFF006 SDWC 15600	FASTEN MASTER FRAMEFAST SIMPSON STRONG DRIVE	1105 615	NA
16	(2) MTW12	MTS12	(28) 10d	2370	
17	(2) MUGT 15	(2) MGT	CMU: (28) 10d (1) 5/8" THREADED ROD 12" EMBED. FRAME: (28) 10d, PHD4A W/ (10) WS3 SCREWS & (1) 5/8" THREADED ROD	8450	
18	(2) RT16-2	(2) H10-2	PLATE: (16) 8d TRUSS: (16) 8d	2120	
19	(2) MSTA24	(2) MSTA24	(18) 10d	3280	
20	RT8A	H8	PLATE: (8) 10d X 1-1/2" TRUSS: (8) 10d X 1-1/2"	750	
22	FA3	MA5	TOP: (4) 10d X 1-1/2" SIDE: (2) 10d X 1-1/2"	1350	
25	HTA20	HETA20	(10) 10d X 1-1/2"	1870	
26	(2) HTA20	(2) HETA20	(20) 10d X 1-1/2"	3430	
27	HTW24	HTS24	(20) 10d	1355	
31	LPTA	LTA2	(10) 10d X 1-1/2" FACE OF GABLE W/2X4	1470	
33	LTW12	LTS12	(12) 10d	625	
35	KST227	MST27	(34) 16d NAILS (4) 1/2 BOLTS	4215 2190	
36	LSTA24	LSTA24	(16) 10d NAILS	1235	
37	MSTA12	MSTA12	(10) 10d	935	
38	MSTA18	MSTA18	(14) 10d	1310	
39	MSTA24	MSTA24	(18) 10d	1640	
40	MSTA30	MSTA30	(22) 10d	2065	
41	MTW12	MTS12	(14) 10d	1185	
43	MSTAM36	MSTAM36	CONCRETE/CMU: (8) 1/4" X 2-1/4" TAPCON FRAME: (13) 10d	1945 TENSION	
44	MUGT 15	MGT	CMU: (28) 10d, (1) 5/8" THREADED ROD 12" EMBED. FRAME: (28) 10d, PHD4A W/ (10) WS3 SCREWS & (1) 5/8" THREADED ROD	4240	
46	MSTC40	MSTC40	(28) 16d NAILS TENSION (24) 16d NAILS	2690 2725	
47	MSTCM60	MSTCM60	CONCRETE/CMU: (14) 1/4" X 2-1/4" TAPCON FRAME: (24) 10d OR (20) 16d	3665 TENSION	
48	RT16A	H10A, H14	PLATE: (8) 8d TRUSS: (9) 10d X 1-1/2"	1025	
49	UPHD8	HDQ8-SDS3	(1) 7/8" THREADED ROD, 8" EPOXY EMBED. (24) WS3 SCREWS	9165	
50	DTB-TZ	DTT2Z	(1) 1/2" X 6" HD SCREW (PHD1411480) (8) WS15-EXT SCREWS	1835 TENSION	
51	PAU66	ABU44	(1) 5/8" X 8" HD SCREW (PHD1411680) (12) 16d NAILS OR (2) 1/2 BOLT	2455 - NAILS 3265 - BOLTS	
53	PAU44	ABU44	(1) 5/8" X 8" HD SCREW (PHD1411680) (12) 16d NAILS OR (2) 1/2 BOLT	2535 - NAILS 3265 - BOLTS	
54	PHD8	HDU8-SDS2.5	(1) 7/8" THREADED ROD, 8" EPOXY EMBED. (24) WS3 WOOD SCREWS	8185	
55	PHD4A	HDU4-SDS2.5	STRAP: (10) WS3 WOOD SCREWS CMU: 5/8" THREADED ROD, 8" EPOXY EMBED FND: 5/8" X 8" HD SCREW (PHD1411680)	5215	
56	HGAM 10KT	HGAM10KTA	RAFTER/TRUSS: (4) WS15 CMU BEAM: (4) 1/4 X 1-3/4" TAPCON	980	
57	LUGT4	LGT4-SDS3	FRM: (32) 16d SINKER CMU: (4) 3/8" X 5" TAPCON TOP PLATE: (5) 16d SINKER TRUSS: (14) WS3 SCREW	4725	
58	PHD2A	HDU2-SDS2.5	STRAP: (6) WS3 WOOD SCREWS CMU: 5/8" THREADED ROD, 8" EPOXY EMBED FND: 5/8" X 8" HD SCREW (PHD1411680)	3215	
59	KST218	ST6215	(28) 16d	2955	
64	HGA 10KT	HGA10KT	RAFTER/TRUSS: (4) WS15 TOP PLATE: (4) WS3	790	
65	LUGT2	LGT2	STUDS: (14) 10d TOP PLATE: (2) 10d TRUSS: (14) 10d	2020	
66	(2) LUGT2	(2) LGT2	STUDS: (14) 10d TOP PLATE: (2) 10d TRUSS: (14) 10d	4040	
67	LUGT3	LGT3-SDS2.5	FRM: (24) 16d SINKER CMU: (4) 3/8" X 5" TAPCON TOP PLATE: (4) 16d SINKER TRUSS: (12) WS15 SCREW	3500	
69	HTT4S	HTT4, HTT5	STRAP: (26) 10d or (26) 16d CMU: 5/8" THREADED ROD, 12" EPOXY EMBED FND: 5/8" X 8" HD SCREW (PHD1411680)	5795	

RSH	ENGINEERED ROOF PER ASCE 7-22 ROOF DESIGN ALLOWABLE COMPONENTS AND CLADDING WIND PRESSURES AND SUCTIONS FOR MEAN ROOF HEIGHT ≤ 25 ft
WIND SPEED (ULTIMATE)	140 MPH
WIND SPEED (ALLOWABLE)	108 MPH
EXPOSURE CATEGORY	B

EFFECTIVE WIND AREA (SQ FEET)	WIND PRESSURE AND SUCTION (PSF) (-) VALUE DENOTES SUCTION			
AREA	ROOF	1	2	3
10	HIP	-26.60	-36.75	-36.75
	GABLE	-28.29	-45.12	-53.58

ROOF NAILING SCHEDULE/ NAILING ZONES (SHINGLE AND TILE):
ZONE 1: ASTM F1667 RSRS-01 (8d) NAILS @ 6" O.C. ON EDGE & 6" O.C IN FIELD
ZONE 2: ASTM F1667 RSRS-01 (8d) NAILS @ 4" O.C. ON EDGE & 4" O.C IN FIELD
ZONE 3: ASTM F1667 RSRS-01 (8d) NAILS @ 4" O.C. ON EDGE & 4" O.C IN FIELD

ROOF SHEATHING:
SHINGLE/METAL: 7/16" STRUCT 1 ZIP ROOF SYSTEM
TILE: 15/32" STRUCT 1 ZIP ROOF SYSTEM
NOTE:
1. PER CODE ASTM F1667 RSRS-01 REFERENCE TO 8d (2 3/4" x 0.113") NAILS
2. WHERE THE SHEATHING THICKNESS IS GREATER THAN 15/32", SHEATHING SHALL BE FASTENED WITH ASTM F1667 RSRS-03 10d (2 1/2" x 0.131") NAILS OR ASTM F1667 RSRS-04 (3" x .120") NAILS
3. GABLES- DROP GABLE END & (1) ADDITIONAL DROPPED TRUSS 2x4 #2 SYP OUTLOOKER RAFTER W/ BLOCKING @ 16" O.C. IF NO DROPPED GABLE END, ATTACH 2x4 #2 SYP BLOCKING @ 16" O.C FIRST 4 BAYS WITH (2) 12d NAILS EA. END. ATTACH ROOF SHEATHING TO RAFTERS W/ BLOCKING PER NAILING SCHEDULE.

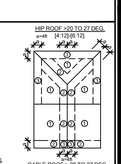

- IN ACCORDANCE WITH FBC RESIDENTIAL SECTION R301.1.3 ENGINEERED DESIGN, WE CONFIRM THAT THE PLYWOOD SHEATHING DESIGN IS ADEQUATE FOR THIS PROJECT AND CAN BE UTILIZED IN PLACE OF THE CODE PRESCRIPTIVE TABLE R803.2.2.
- WE HAVE REVIEWED THE ROOF SHEATHING REQUIREMENTS FOR THIS PROJECT IN ACCORDANCE WITH THE ASCE 7-22 WIND SPEED AND EXPOSURE CATEGORY DEFINED IN THE STRUCTURAL DOCUMENTS. WE APPROVE AND CERTIFY THE SHEATHING INDICATED ON THE PLAN TO BE ADEQUATE TO SUPPORT THE WIND LOADS FOR THIS ROOF.
- ENGINEERED DESIGN CALCULATIONS HAVE BEEN PERFORMED FOR USE IN AREAS NOT EXCEEDING THE WIND SPEED AND EXPOSURE OF 156 MPH, EXP. 'C'. IF THE WIND SPEED DESIGN EXCEEDS 156 MPH THE TABLE R803.2.2 WILL BE REFERENCED. THE NAILING LISTED IN THE RSH CHART HAS BEEN VERIFIED TO MEET OR EXCEED THE NAIL SIZE AND SPACING REQUIREMENTS LISTED IN TABLE R803.2.3.1.

FOR COUNTY USE ONLY

01/20/2025

To the best of the Engineer's knowledge, information and belief, the structural plans and specifications contained within these drawings comply with the Florida Building Code 8th Edition (2023) Residential. Engineer's signature and seal is only for the structural engineering portions of the drawing pages bearing Engineer's signature and seal.

CA No. 9161 AA26003115

TSG Making Dreams Come True
TOTAL SOLUTIONS GROUP
258 Southhall Lane, Suite 200
Maitland, Florida, 32751
(407) 880 2333
100% Employee Owned
myTSGhome.com

MARONDA Homes
3969 West First Street
Sanford, FL 32771
(407)302-9871

Community: Forest Cove
Plan Name: Livorno
Garage Side: Left
Elev - J
Lot: 6
Block:
Address: TBD SW Cadence Glen Lake City, FL 32024
Job no. 9FC00601
Renaissance Series
Reference No. 25-00449
Sheet: 5.0

FRAMING PLAN

CARLOS.DAVILA 1/17/2025

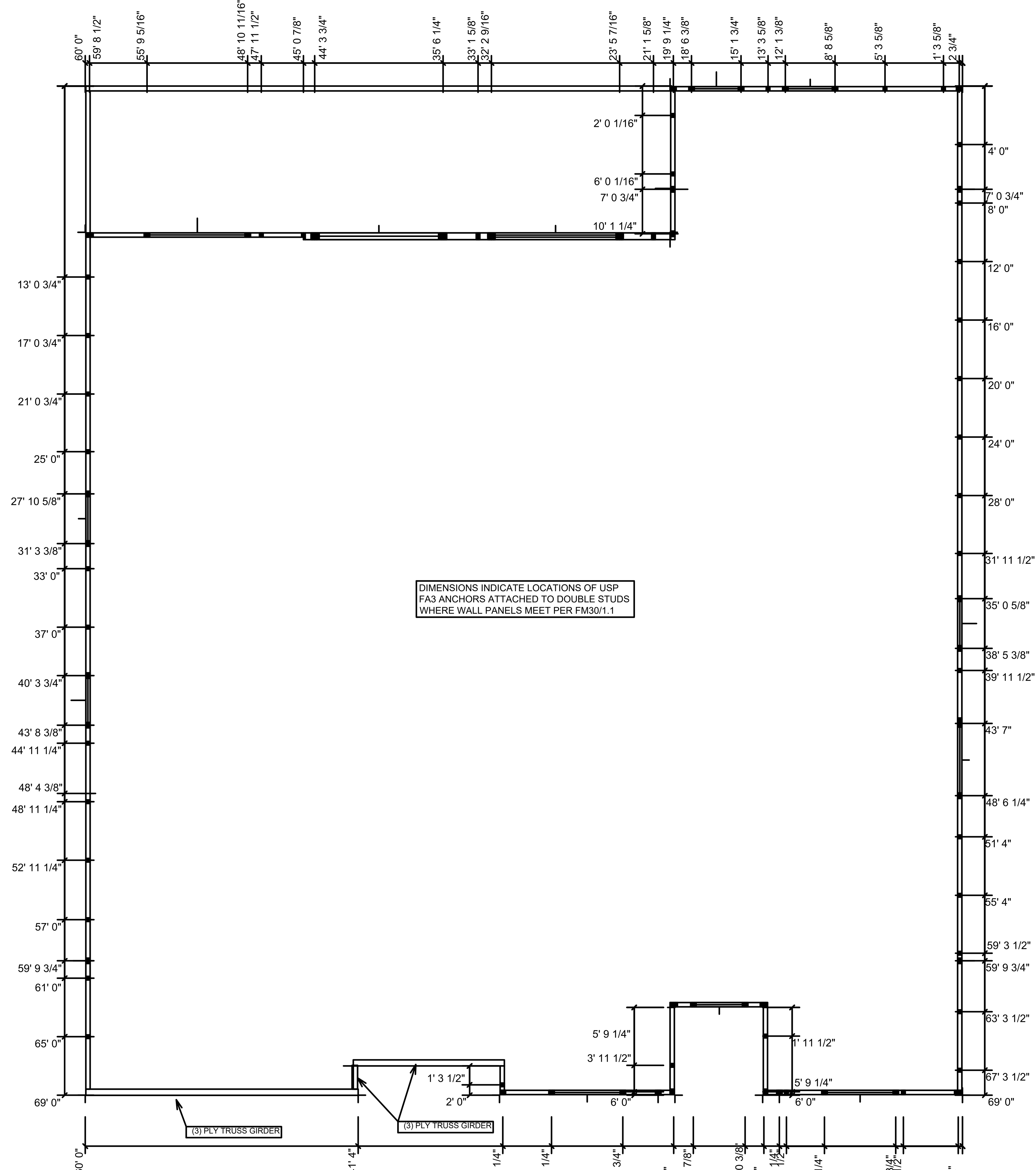

STRAPPING PLAN

SCALE: 3/16" = 1'- 0"

BEAM SCHEDULE

MARK	BEAM SIZE	CONNECTIONS
BM1	(2) - 2 x 8 #2 SYP W/ 7/16" OSB FLITCH PLATE. NAIL BEAM TOGETHER USING (2) ROWS OF 12d NAILS @ 12" O.C. TYP EACH SIDE	PROVIDE (2) USP MSTA18 OR (2) USPHTW24 TO WOOD POST OR (2) USPTA18 TO CMU COL. U.N.O. ON ROOF OR FLOOR PLAN
BM2	(2) - 2 x 10 #2 SYP W/ 7/16" OSB FLITCH PLATE. NAIL BEAM TOGETHER USING (2) ROWS OF 12d NAILS @ 12" O.C. TYP EACH SIDE	PROVIDE (2) USP MSTA18 OR (2) USPHTW24 TO WOOD POST OR (2) USPTA18 TO CMU COL. U.N.O. ON ROOF OR FLOOR PLAN
BM3	(2) - 2 x 12 #2 SYP W/ 7/16" OSB FLITCH PLATE. NAIL BEAM TOGETHER USING (2) ROWS OF 12d NAILS @ 12" O.C. TYP EACH SIDE	PROVIDE (2) USP MSTA18 OR (2) USPHTW24 TO WOOD POST OR (2) USPTA18 TO CMU COL. U.N.O. ON ROOF OR FLOOR PLAN
BM4	3 ½" x 9 ¼" GLULAM (1.9E / Fb=2,400 PSI)	PROVIDE (2) USP MSTA18 OR (2) USPHTW24 TO WOOD POST OR (2) USPTA18 TO CMU COL. U.N.O. ON ROOF OR FLOOR PLAN
BM5	3 ½" x 11 ¼" GLULAM (1.9E / Fb=2,400 PSI)	PROVIDE (2) USP MSTA18 OR (2) USPHTW24 TO WOOD POST OR (2) USPTA18 TO CMU COL. U.N.O. ON ROOF OR FLOOR PLAN
BM6	3 ½" x 16" GLULAM (1.9E / Fb=2,400 PSI)	PROVIDE (2) USP MSTA18 OR (2) USPHTW24 TO WOOD POST OR (2) USPTA18 TO CMU COL. U.N.O. ON ROOF OR FLOOR PLAN
BM7	5 ½" x 16" GLULAM (1.9E / Fb=2,400 PSI)	PROVIDE (2) USP MSTA18 OR (2) USPHTW24 TO WOOD POST OR (2) USPTA18 TO CMU COL. U.N.O. ON ROOF OR FLOOR PLAN
BM8	3 ½" x 14" GLULAM (1.9E / Fb=2,400 PSI)	PROVIDE (2) USP MSTA18 OR (2) USPHTW24 TO WOOD POST OR (2) USPTA18 TO CMU COL. U.N.O. ON ROOF OR FLOOR PLAN

GENERAL BEAM NOTES

1. VERIFY WITH PLAN CORRECT LENGTH OF BEAMS REQUIRED (MIN 4" BEARING EACH END)
2. SEE PLAN FOR TOP OR BOTTOM OF BEAM INDICATIONS
3. BEAMS ARE NOT TO BE DRILLED OR NOTCHED IN ANY WAY WITHOUT WRITTEN APPROVAL FROM THE E.O.R.

TYPICAL TRUSS CONNECTION

U.N.O. ON ROOF FRAMING PLAN

- TRUSS TO WOOD FRAMING: (1) 6" LG. FRAMEFAST FMFFOO6 TRUSS SCREW w/ (2) 10d TOENAILS

JACK TRUSSES TO GIRDER TRUSS SHALL BE NAILED TOP/BOTTOM CHORD. FOR VALLEY SET TRUSSES, SEE ENGINEERING TRUSS PACKAGE FOR CORRECT CONNECTION [VC1]

ROOF FRAMING NOTES

SHINGLE, METAL OR TILE ROOFING SYSTEM (SEE ARCH.) OVER APPROVED UNDERLAYMENT, OVER SHEATHING PER ENGINEERED ROOF SPECIFICATIONS (SEE FRAMING PLAN) ON PRE-ENGINEERED WOOD TRUSSES AT 2'-0" O.C. MAX OR CONVENTIONAL FRAME ROOF. (SEE PLAN FOR SIZE, SPACING, TYPICAL ROOF SLOPE, AND OTHER INFORMATION)

ATTN: BUILDING DEPARTMENT

PLEASE NOTE THAT TRUSS LABELS MAY VARY BUT, IF THE TRUSS LAYOUT SHOWN DOES NOT MATCH THE TRUSS MANUFACTURERS LAYOUT PLEASE CONTACT THE ENGINEER OF RECORD PRIOR TO PLACEMENT OF ANY TRUSSES.

DRAFTSTOPPING DETAIL

R302.6 THE GARAGE SHALL BE SEPARATED FROM THE RESIDENCE AND ITS ATTIC BY NOT LESS THAN 1/2-INCH (12.7MM) GYPSUM BOARD APPLIED TO THE GARAGE SIDE. GARAGE BENEATH ROOMS SHALL BE SEPARATED FROM ALL HABITABLE ROOMS ABOVE BY NOT LESS THAN 5/8-INCH (15.9MM) TYPE X GYPSUM BOARD OR EQUIVALENT. WHERE THE SEPARATION IS A FLOOR CEILING ASSEMBLY, THE STRUCTURE SUPPORTING THE SEPARATION SHALL ALSO BE PROTECTED BY NOT LESS THAN 1/2-INCH (12.7MM) GYPSUM BOARD OR EQUIVALENT.

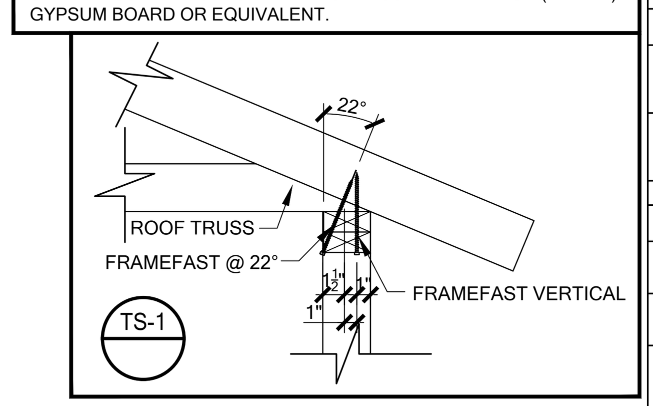

USP HARDWARE 160% 61ST EDITION CATALOG				REV FOR 8TH EDITION FLORIDA CODE	
MARK	PRODUCT CODE	REF. NO.	FASTENERS	UPLIFT	ROOF 115%
HANGERS FOR TRUSS TO TRUSS CONECTION					DATE: 10-25-23
1	HUS 26	HUS26	HEADER: (14) 16d TRUSS: (6) 16d	2045	3140
2	HUS 28	HUS28	HEADER: (22) 16d TRUSS: (8) 16d	2990	4745
3	JUS 26	LUS26	HEADER: (4) 10d TRUSS: (4) 10d	1050	1000
12	THD 28-2	HTU28-2	HEADER: (28) 16d TRUSS: (16) 10d X 1-1/2"	2595	4860
13	THDH 28-3	HGUS28-3	HEADER: (36) 16d TRUSS: (12) 10d X 1-1/2"	4345	8175
14	THD 48	HHUS48	HEADER: (28) 16d TRUSS: (16) 10d X 1-1/2"	2595	4860
15	HJC26	THJU26	HIP: (5) 10d HEADER: (16) 16d JACK: (7) 10d	2345	3055
28	HJC26 - SK60	LTHJA26, THJA26, THJU26	HIP: (5) 10d HEADER: (16) 16d JACK: (7) 10d	2345	3055
60	HUS179	HUS1.81/10	HEADER: (30) 16d TRUSS: (10) 16d	4110	6060
71	HD410	HU410	HEADER: (20) 16d TRUSS: (10) 10d	1950	3475
72	THD210-3	HHUS210-3	HEADER: (38) 16d TRUSS: (20) 10d	4035	7255
73	HD48 IF	HU48	HEADER: (14) 3/16 X 1-3/4" CMU; (14) 16d FRM JOIST/BEAM: (6) 10d	2430	1170
74	HD410 IF	HU410	HEADER: (20) 3/16 X 1-3/4" CMU; (20) 16d FRM JOIST/BEAM: (10) 10d	3475	1950
75	LGUM410	LGUM410-SDS	SOLID POUR CMU: (8) 3/4 X 4" JOIST/BEAM: (8) WS3 SCREWS	3350	9905
76	HD28-2 IF	HU28-2	HEADER: (14) 3/16 X 1-3/4" CMU; (14) 16d FRM JOIST/BEAM: (6) 10d	1170	2430
CONNECTORS FOR TRUSS TO WALL					
N	16d NAILS - (2) TOP CHORD NAILS / (2) BOTTOMCHORD NAILS				
	6" LONG TRUSS SCREW	FMFF006 SDWC 15600	FASTEN MASTER FRAMEFAST SIMPSON STRONG DRIVE	690 / 2-1105 615	NA
	(2) 6" LONG TRUSS SCREW	FMFF006 SDWC 15600	FASTEN MASTER FRAMEFAST SIMPSON STRONG DRIVE	1105 615	NA
16	(2) MTW12	MTS12	(28) 10d	2370	
17	(2) MUGT 15	(2) MGT	CMU: (28) 10d (1) 5/8" THREADED ROD 12" EMBED. FRAME: (28) 10d, PHD4A W/ (10) WS3 SCREWS & (1) 5/8" THREADED ROD	8480	
18	(2) RT16-2	(2) H10-2	PLATE: (16) 8d TRUSS: (16) 8d	2120	
19	(2) MSTA24	(2) MSTA24	(18) 10d	3280	
20	RT8A	H8	PLATE: (5) 10d X 1-1/2" TRUSS: (5) 10d X 1-1/2"	750	
22	FA3	MAS	TOP: (4) 10d X 1-1/2" SIDE: (2) 10d X 1-1/2"	1350	
25	HTA20	HETA20	(10) 10d X 1-1/2"	1870	
26	(2) HTA20	(2) HETA20	(20) 10d X 1-1/2"	2430	
27	HTW24	HTS24	(20) 10d	1355	
31	LPTA	LTA2	(10) 10d X 1-1/2" FACE OF GABLE W/2X4	1470	
33	LTW12	LTS12	(12) 10d	625	
35	KST227	MST27	(34) 16d NAILS (4) 1/2 BOLTS	4215 2190	
36	LSTA24	LSTA24	(16) 10d NAILS	1235	
37	MSTA12	MSTA12	(10) 10d	935	
38	MSTA18	MSTA18	(14) 10d	1310	
39	MSTA24	MSTA24	(18) 10d	1640	
40	MSTA30	MSTA30	(22) 10d	2065	
41	MTW12	MTS12	(14) 10d	1185	
43	MSTAM36	MSTAM36	CONCRETE/CMU: (8) 1/4" X 2-1/4" TAPCON FRAME: (13) 10d	1945 TENSION	
44	MUGT 15	MGT	CMU: (28) 10d, (1) 5/8" THREADED ROD 12" EMBED. FRAME: (28) 10d, PHD4A W/ (10) WS3 SCREWS & (1) 5/8" THREADED ROD	4240	
46	MSTC40	MSTC40	(28) 10d NAILS TENSION (24) 16d NAILS	2690 2725	
47	MSTCM60	MSTCM60	CONCRETE/CMU: (14) 1/4" X 2-1/4" TAPCON FRAME: (24) 10d OR (20) 16d	3665 TENSION	
48	RT16A	H10A, H14	PLATE: (8) 8d TRUSS: (9) 10d X 1-1/2"	1025	
49	UPHD8	HDQ8-SDS3	(1) 7/8" THREADED ROD, 8" EPOXY EMBED. (24) WS3 SCREWS	9165	
50	DTB-TZ	DTT2Z	(1) 1/2" X 6" HD SCREW (PHD1411480) (8) WS15-EXT SCREWS	1835 TENSION	
51	PAU66	ABU44	(1) 5/8" X 8" HD SCREW (PHD1411680) (12) 16d NAILS OR (2) 1/2 BOLT	2455 - NAILS 2265 - BOLTS	
53	PAU44	ABU44	(1) 5/8" X 8" HD SCREW (PHD1411680) (12) 16d NAILS OR (2) 1/2 BOLT	2535 - NAILS 2265 - BOLTS	
54	PHD8	HDU8-SDS2.5	(1) 7/8" THREADED ROD, 8" EPOXY EMBED. (24) WS3 WOOD SCREWS	8185	
55	PHD4A	HDU4-SDS2.5	STRAP: (10) WS3 WOOD SCREWS CMU: 5/8" THREADED ROD, 8" EPOXY EMBED FND: 5/8" X 8" HD SCREW (PHD1411680)	5215	
56	HGAM 10KT	HGAM10KTA	RAFTER/TRUSS: (4) WS15 CMU BEAM: (4) 1/4 X 1-3/4" TAPCON	980	
57	LUGT4	LGT4-SDS3	FRM: (32) 16d SINKER CMU: (4) 3/8" X 5" TAPCON TOP PLATE: (5) 16d SINKER TRUSS: (16) WS3 SCREW	4725	
58	PHD2A	HDU2-SDS2.5	STRAP: (6) WS3 WOOD SCREWS CMU: 5/8" THREADED ROD, 8" EPOXY EMBED FND: 5/8" X 8" HD SCREW (PHD1411680)	3215	
59	KST218	ST6215	(26) 16d	2955	
64	HGA 10KT	HGA10KT	RAFTER/TRUSS: (4) WS15 TOP PLATE: (4) WS3	790	
65	LUGT2	LGT2	STUDS: (14) 10d TOP PLATE: (2) 10d TRUSS: (16) 10d	2020	
66	(2) LUGT2	(2) LGT2	STUDS: (14) 10d TOP PLATE: (2) 10d TRUSS: (16) 10d	4040	
67	LUGT3	LGT3-SDS2.5	FRM: (24) 16d SINKER CMU: (4) 3/8" X 5" TAPCON TOP PLATE: (4) 16d SINKER TRUSS: (12) WS25 SCREW	3500	
69	HTT45	HTT4, HTT5	STRAP: (26) 10d or (26) 16d CMU: 5/8" THREADED ROD, 12" EPOXY EMBED FND: 5/8" X 8" HD SCREW (PHD1411680)	5795	

RSH — ENGINEERED ROOF PER ASCE 7-22 ROOF DESIGN ALLOWABLE COMPONENTS AND CLADDING WIND PRESSURES AND SUCTIONS FOR MEAN ROOF HEIGHT ≤ 25 ft

WIND SPEED (ULTIMATE)	140 MPH
WIND SPEED (ALLOWABLE)	108 MPH
EXPOSURE CATEGORY	B

EFFECTIVE WIND AREA (SQ FEET)	WIND PRESSURE AND SUCTION (PSF) (-) VALUE DENOTES SUCTION			
AREA	ROOF	1	2	3
10	HIP	-26.60	-36.75	-36.75
	GABLE	-28.29	-45.12	-53.58

HIP ROOF >20 TO 27 DEG. [4:12]-[6:12]

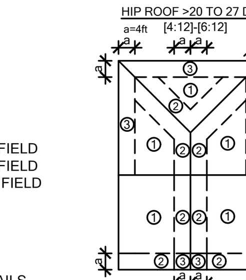

GABLE ROOF > 20 TO 27 DEG. [4:12]-[6:12]

ROOF NAILING SCHEDULE/ NAILING ZONES (SHINGLE AND TILE):
ZONE 1: ASTM F1667 RSRS-01 (8d) NAILS @ 6" O.C. ON EDGE & 6" O.C IN FIELD
ZONE 2: ASTM F1667 RSRS-01 (8d) NAILS @ 4" O.C. ON EDGE & 4" O.C IN FIELD
ZONE 3: ASTM F1667 RSRS-01 (8d) NAILS @ 4" O.C. ON EDGE & 4" O.C IN FIELD

ROOF SHEATHING:
SHINGLE/METAL: 7/16" STRUCT 1 ZIP ROOF SYSTEM
TILE: 15/32" STRUCT 1 ZIP ROOF SYSTEM

NOTE:
1. PER CODE ASTM F1667 RSRS-01 REFERENCE TO 8d (2 ⅜" x 0.113") NAILS
2. WHERE THE SHEATHING THICKNESS IS GREATER THAN 15/32", SHEATHING SHALL BE FASTENED WITH ASTM F1667 RSRS-03 10d (2½" x 0.131") NAILS OR ASTM F1667 RSRS-04 (3" x .120") NAILS
3. GABLES- DROP GABLE END & (1) ADDITIONAL DROPPED TRUSS 2x4 #2 SYP OUTLOOKER RAFTER W/ BLOCKING @ 16" O.C. IF NO DROPPED GABLE END, ATTACH 2x4 #2 SYP BLOCKING @ 16" O.C FIRST 4 BAYS WITH (2) 12d NAILS EA. END. ATTACH ROOF SHEATHING TO RAFTERS W/ BLOCKING PER NAILING SCHEDULE.

- IN ACCORDANCE WITH FBC RESIDENTIAL SECTION R301.1.3 ENGINEERED DESIGN, WE CONFIRM THAT THE PLYWOOD SHEATHING DESIGN IS ADEQUATE FOR THIS PROJECT AND CAN BE UTILIZED IN PLACE OF THE CODE PRESCRIPTIVE TABLE R803.2.2.
- WE HAVE REVIEWED THE ROOF SHEATHING REQUIREMENTS FOR THIS PROJECT IN ACCORDANCE WITH THE ASCE 7-22 WIND SPEED AND EXPOSURE CATEGORY DEFINED IN THE STRUCTURAL DOCUMENTS. WE APPROVE AND CERTIFY THE SHEATHING INDICATED ON THE PLAN TO BE ADEQUATE TO SUPPORT THE WIND LOADS FOR THIS ROOF.
- ENGINEERED DESIGN CALCULATIONS HAVE BEEN PERFORMED FOR USE IN AREAS NOT EXCEEDING THE WIND SPEED AND EXPOSURE OF 156 MPH, EXP. 'C'. IF THE WIND SPEED DESIGN EXCEEDS 156 MPH THE TABLE R803.2.2 WILL BE REFERENCED. THE NAILING LISTED IN THE RSH CHART HAS BEEN VERIFIED TO MEET OR EXCEED THE NAIL SIZE AND SPACING REQUIREMENTS LISTED IN TABLE R803.2.3.1.

FOR COUNTY USE ONLY

01 / 20 / 2025

To the best of the Engineer's knowledge, information and belief, the structural plans and specifications contained within these drawings comply with the Florida Building Code 8th Edition (2023) Residential. Engineer's signature and seal is only for the structural engineering portions of the drawing pages bearing Engineer's signature and seal.

CA No. 9161 AA26003115

TSG Making Dreams Come True
TOTAL SOLUTIONS GROUP
258 Southhall Lane, Suite 200
Maitland, Florida, 32751
(407) 880 2333
100% Employee Owned
myTSGhome.com

MARONDA Homes
3999 West First Street
Sanford, FL 32771
(407)302-9871

Community: Forest Cove
Plan Name: Livorno
Elev - J
Garage Side: Left
Lot: 6
Block:
Address: TBD SW Cadence Glen Lake City, FL 32024
Job no. 9FC00601
Renaissance Series
Reference No. 25-00449
Sheet: 5.1
STRAPPING PLAN

CARLOS.DAVILA 1/17/2025

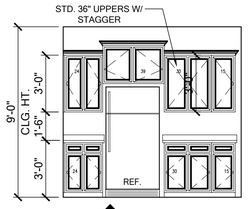

1 STD. KITCHEN

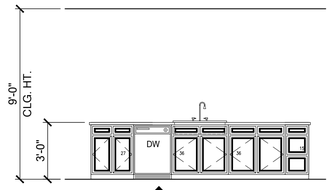

2 STD. KITCHEN ISLAND

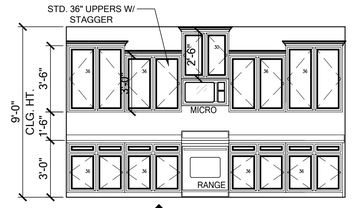

3 STD. KITCHEN

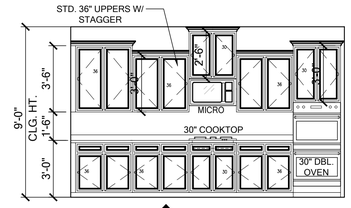

3.1 GOURMET KITCHEN

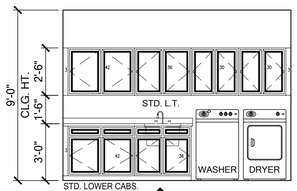

4 LAUNDRY

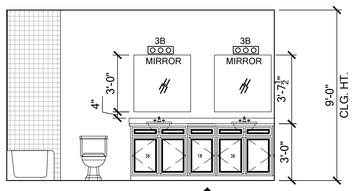

5 BATH 2

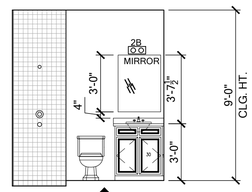

6 BATH 3

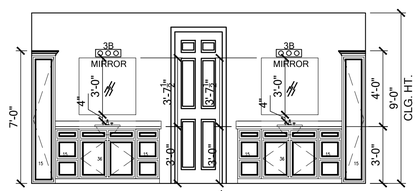

7 STD. MASTER BATH

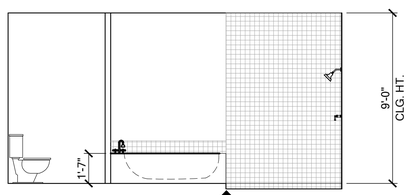

8 STD. MASTER BATH

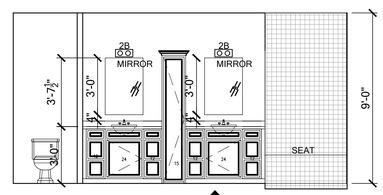

7.1 OPT. DELUXE MASTER BATH

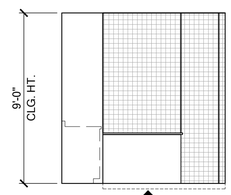

8.1 OPT. DELUXE MASTER BATH

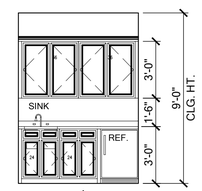

9 WET BAR

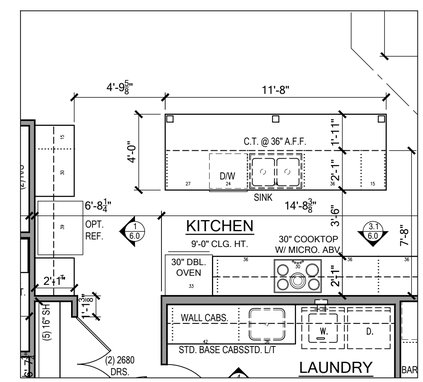

GOURMET KITCHEN PLAN

SCALE: 1/4" = 1'- 0"

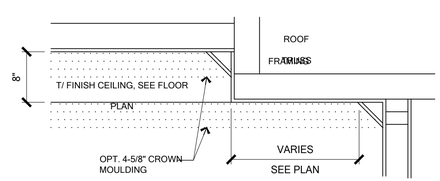

POP-UP ROOF TRUSS TRAY CEILING

SCALE: 1" = 1'- 0"

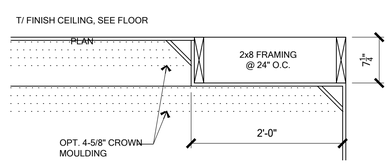

DROP DOWN TRAY CEILING

SCALE: 1" = 1'- 0"

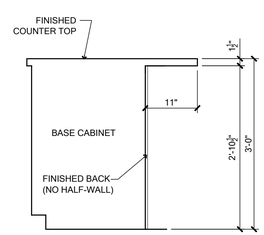

FLOW-THRU BAR SECTION w/ FINISHED BACK

SCALE: 3/4" = 1'- 0"

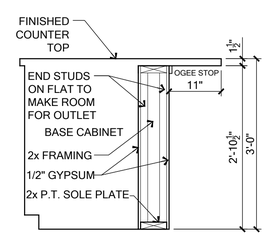

FLOW-THRU BAR SECTION w/ HALF WALL

SCALE: 3/4" = 1'- 0"

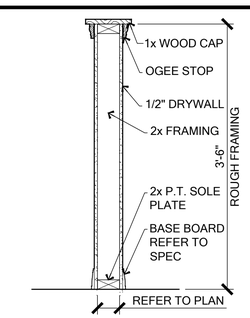

TYPICAL HALF-WALL

SCALE: 1" = 1'- 0"

FOR COUNTY USE ONLY

01/20/2025

To the best of the Engineer's knowledge, information and belief, the structural plans and specifications contained within these drawings comply with the Florida Building Code 6th Edition (2023) Residential. Engineer's signature and seal is only for the structural engineering portions of the drawing pages bearing Engineer's signature and seal.

CA No. 9161 AA26003115

TSG Making Dreams Come True

TOTAL SOLUTIONS GROUP
258 Southhall Lane, Suite 200
Maitland, Florida, 32751
(407) 880 2333

100% Employee Owned
myTSGhome.com

MARONDA Homes
3899 West First Street
Sanford, FL 32771
(407)302-9871

Community: Forest Cove
Plan Name: Livorno
Elev - J
Garage Side: Left
Renaissance Series
Address: TBD SW Cadence Glen Lake City, FL 32024
Block:
Lot: 6
Job no. 9FC00601
Reference No. 25-00449
Sheet: 6.0

INTERIOR ELEV

CARLOS.DAVILA 1/17/2025

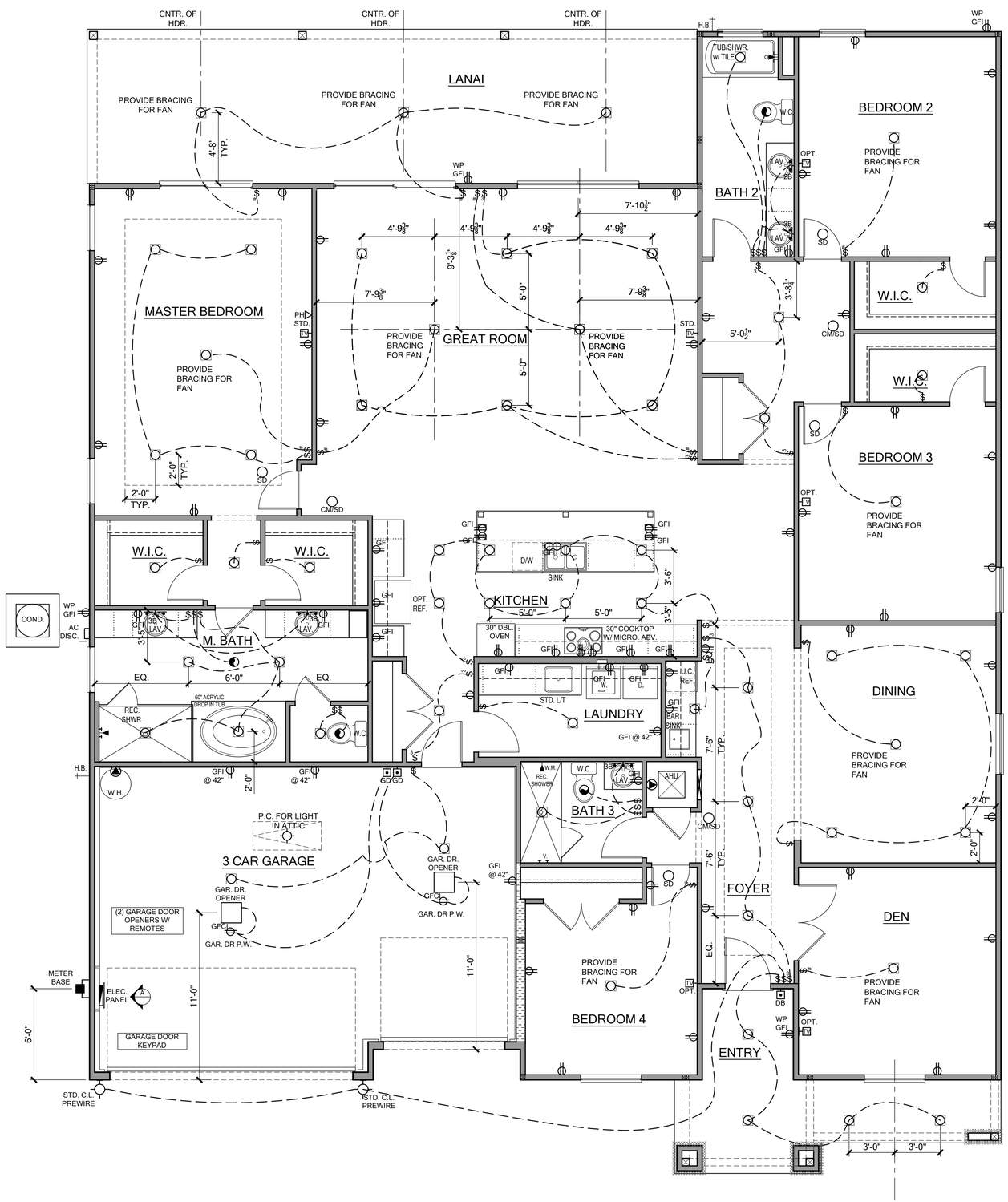

PANEL WALL DETAIL

A / 7.0

SCALE: 1/4" = 1'- 0"

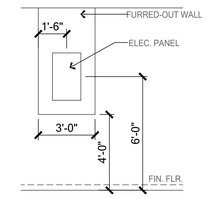

ELECTRICAL PLAN

SCALE: 1/4" = 1'- 0"

ELECTRICAL LEGEND

POWER SYMBOLS

	110-115 RECEPTACLE	WP	WEATHER PROOF
	SINGLE POLE RECEPTACLE	VP	VAPOR PROOF
	SWITCHED RECEPTACLE	GFI	GROUND FAULT INTERRUPT
	QUAD RECEPTACLE	A	ARC FAULT INTERRUPT
	CEILING / SOFFIT RECEPTACLE	48	MOUNTING HEIGHT
	FLOOR RECEPTACLE	GDO	GARAGE DOOR OPENER
	220 RECEPTACLE	PS	PULL STRING
SD	SMOKE DETECTOR		MOTOR
CM	CARBON MONOXIDE DETECTOR		BATH FAN
CM/SD	COMBINATION SMOKE AND CARBON MONOXIDE DETECTOR		BATH FAN AND LIGHT COMBINATION
ISO	ISOLATED CIRCUIT		SINGLE POLE SWITCH
	14/3 WIRE SWITCH		THREE WAY SWITCH
	OPTIONAL CEILING FAN PREWIRE		SPECIAL PURPOSE
	OPTIONAL LIGHT PRE-WIRE		DISCONNECT
	STANDARD CEILING FAN PREWIRE		ELECTRIC PANEL
	STANDARD LIGHT PRE-WIRE		METER BASE

LIGHTING SYMBOLS

	CEILING MNT LIGHT FIXTURE		2' FLOUR. SINGLE BULB
	WALL MNT LIGHT FIXTURE		4' FLOUR. SINGLE BULB
	WALL WASH FIXTURE		4' FLOUR. DOUBLE BULB
	LED LIGHT		4' FLOUR. WRAP
	BATH FAN AND LIGHT COMBINATION		ROPE LIGHTING
	DOUBLE FLOOD LIGHT		SCONCE LIGHT
	EMERGENCY LIGHT		EXIT LIGHT SIGN

LOW VOLTAGE SYMBOLS

	SPEAKER		PUSH BUTTON / DOOR BELL
TV	TV OUTLET		DATA OUTLET
	TELEPHONE	T	THERMOSTAT
CH	DOOR CHIME		

ELECTRICAL RISER DIAGRAM

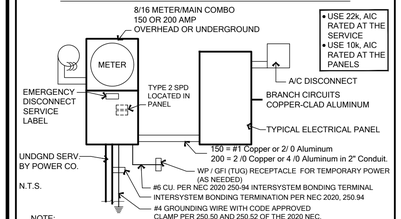

NOTE:
ELECTRICAL MATERIAL AND INSTALLATIONS SHALL COMPLY WITH APPLICABLE PROVISIONS OF THE NFPA 70, LOCAL CODES AND LOCAL POWER/UTILITY COMPANY

Notes: unless otherwise noted,

1. Electrical outlet heights as measured from finished floor to centered line of the box to be: 16" AFF (general). In a Flood Zone, all electrical equipment to be at or above DFE.

Kitchen	44" AFF	GFIs AT Front Entry	24" AFF
Bathroom	39" AFF	Door Bell Push Button	44" AFF
Laundry Room	36" AFF	Thermostat	60" AFF
Exterior Waterproof	12" AFF	To Chandelier Bottom	66" AFF
Garage General Purpose	42" AFF	Microwave Outlet	80" AFF
Range	2" AFF	Vented Hood	80" AFF

2. All trim plates and devices to be ganged, where possible.
3. Electrical switches to be at 42" centerline above finished floor.
4. Electrical plan is intended for bid purposes only. All work shall be done in strict accordance with the National Electric Code (NEC), latest edition, by a licensed electrical contractor who shall be responsible for the installation & sizing of all electrical, wiring & accessories.
5. Smoke alarms shall comply with NFPA 72 and Section R314 and shall be listed in accordance with UL 217. Combination smoke and carbon monoxide alarms shall be listed in accordance with UL 217 and UL 2034.
6. Provide AFCI's (Arc-Fault Circuit Interrupters) combination type installed to provide protection of the branch circuits in all dwelling units per NFPA 70 (Current Edition) and the NEC and as defined in UL 1699.
7. Provide Tamper Resistant Receptacles as required by the NFPA 70 (Current Edition).
8. Carbon Monoxide Protection: carbon monoxide alarms or detectors shall be installed in all dwelling units in accordance with FBC R315 and NFPA 70. Such devices shall be listed by the appropriate standard, either ANSI/UL 2034, standard for single and multiple station CO alarms or UL 2075, gas and vapor detector sensor, according to the installation.
9. R315.1.2 Combination Alarms: combination smoke/carbon monoxide alarms shall be listed and labeled by a Nationally Recognized Testing Laboratory.
10. Keep all smoke detectors minimum of 36" from bathroom doors.
11. In new construction, smoke detectors shall be hardwired into an A/C electrical power source and shall be equipped with a monitored battery backup.
12. Bathroom exhaust fans must vent to the exterior of the building, ventilation to attic space and soffits is not acceptable.
13. Chapter 45 Private Swimming Pools - Outdoor swimming pools shall be provided with a barrier complying with R4501.17.1.1 through R4501.17.1.14.
14. Add GFCI protection to receptacles in laundry rooms and utility rooms of dwellings where installed within 6' of the outside edge of a sink. This would include the receptacle installed for a washing machine. Receptacle outlets shall not be required on a wall directly behind a range or sink to fulfill the requirement of an outlet every 24". The width of the sink or range is not to be included in the spacing of the outlets unless the distance from the sink or range is greater than 12" for straight counter tops and 18" for sinks and ranges installed in corner counters.
15. Where more than one smoke alarm is required to be installed within an individual dwelling unit in accordance with section R314.3, the alarm devices shall be interconnected in such a manner that the actuation of one alarm will activate all of the alarms in the individual dwelling unit. Physical interconnection of smoke alarms shall not be required where listed wireless alarms are installed and all alarms sound upon activation of one alarm.
16. For one- and two-family dwelling units, all service conductors shall terminate in disconnecting means having a short-circuit current rating equal to or greater than the available fault current, installed in a readily accessible outdoor location. Each disconnect shall be one of the following:
    (1)Service disconnects marked as follows:
    EMERGENCY DISCONNECT,
    SERVICE DISCONNECT
    (2)Meter disconnects installed per 230.82(3) and marked as follows:
    EMERGENCY DISCONNECT,
    METER DISCONNECT,
    NOT SERVICE EQUIPMENT
    (3)Other listed disconnect switches or circuit breakers on the supply side of each service disconnect that are suitable for use as service equipment and marked as follows:
    EMERGENCY DISCONNECT,
    NOT SERVICE EQUIPMENT
    Markings shall comply with 110.21(B).
17. All permanently installed luminaries, excluding those in kitchen appliances, shall have an efficacy of at least 45 lumens-per-watt or shall utilize lamps with an efficacy of not less than 65 lumens-per-watt.

FOR COUNTY USE ONLY

01/20/2025

To the best of the Engineer's knowledge, information and belief, the structural plans and specifications contained within these drawings comply with the Florida Building Code 8th Edition (2023) Residential. Engineer's signature and seal is only for the structural engineering portions of the drawing pages bearing Engineer's signature and seal.

CA No. 9161 AA26003115

TSG Making Dreams Come True
TOTAL SOLUTIONS GROUP
258 Southhall Lane, Suite 200
Maitland, Florida, 32751
(407) 880 2333
100% Employee Owned
myTSGhome.com

MARONDA Homes
3909 West First Street
Sanford, FL 32771
(407)302-9871

Community: Forest Cove		Garage Side: Left	
Plan Name: Livorno	Elev - J		
Lot: 6	Block:		
Address: TBD SW Cadence Glen Lake City, FL 32024			
Job no: 9FC00601			Renaissance Series
Reference No. 25-00449			
Sheet: 7.0			

ELECTRICAL

1/17/2025

CARLOS.DAVILA

TERMITE SPECIFICATIONS

SECTION R318 PROTECTION AGAINST TERMITES

TERMITE PROTECTION SHALL BE PROVIDED BY REGISTERED TERMITICIDES, INCLUDING SOIL APPLIED PESTICIDES, BAITING SYSTEMS, AND PESTICIDES APPLIED TO WOOD, OR OTHER APPROVED METHODS OF TERMITE PROTECTION LABELED FOR USE A PREVENTIVE TREATMENT TO NEW CONSTRUCTION (SEE SECTION 202, REGISTERED TERMITICIDE). UPON COMPLETION OF THE APPLICATION OF THE TERMITE PROTECTIVE TREATMENT, A CERTIFICATE OF COMPLIANCE SHALL BE ISSUED TO THE BUILDING DEPARTMENT BY THE LICENSED PEST CONTROL COMPANY THAT CONTAINS THE FOLLOWING STATEMENT: "THE BUILDING HAS RECEIVED A COMPLETE TREATMENT FOR THE PREVENTION OF SUBTERRANEAN TERMITES. TREATMENT IS IN ACCORDANCE WITH RULES AND LAWS ESTABLISHED BY THE FLORIDA DEPARTMENT OF AGRICULTURE AND CONSUMER SERVICES."

NOTES:

1. METHOD OF TREATMENT SHALL BE APPROVED BY THE GOVERNING JURISDICTION "LIQUID BORATE OR BOR-A-COR" PRODUCT METHODS MUST BE DETERMINED AT PERMIT STAGE AND PRODUCT APPROVAL DATA MUST BE ON FILE WITH THE BUILDING DEPARTMENT.
2. PRESSURE TREATED LUMBER THAT HAS BEEN CUT OR DRILLED THAT EXPOSES UNTREATED PORTIONS OF WOOD ARE REQUIRED TO BE FIELD TREATED TO PREVENT INSECT INFESTATION.
3. OPTIONAL BORATE APPLIED TO ALL FRAME MEMBERS WITHIN 24" A.F.F.

NOTICE TO BUILDER AND ALL SUBCONTRACTORS

It is the intent of the Engineer listed in the titleblock of these documents that these documents be accurate, providing Licensed Professionals clear information. Every attempt has been made to prevent error. The Builder and all subcontractors are required to review all the information contained in these documents, prior to the commencement of any work. The Engineer are not responsible for any plan errors, omissions, or misinterpretations undetected and not reported to the Engineer prior to construction. All construction MUST be in accordance to the information found in these documents. Any questions regarding the information found in these plans should be directed to our Quality Assurance Manager at 321-972-0491 immediately. No backcharges will be considered for reimbursement by the Engineer without advanced notification and approval by the Engineer. Payments will be made in accordance to the terms of the agreement.

Care and Maintenance: Yearly maintenance and inspections by the builder/homeowner are necessary for the future life of this home. Care must be taken to check windows and doors for caulking, remove leaves and debris off roofs, make sure that water flow is away from the house and have your home repainted every 3 - 5 years to protect the coatings. The designer and engineer of record are not responsible for instances that may occcur over the normal life of the home without proper maintenance.

THIS DETAIL ONLY REFERS TO THE DIAMOND-MESH EXPANDED METAL LATH ATTACHMENT.

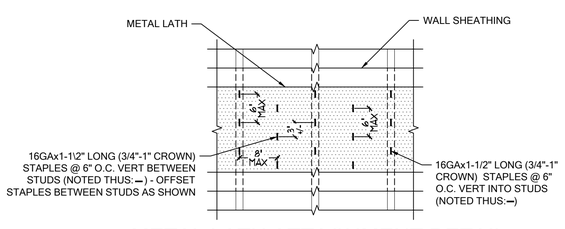

METAL LATH ATTACHMENT DETAIL

REV. 09.24.21 SCALE: 3/4" = 1'-0"

DETAIL EXCEEDS THE REQUIREMENTS FOR FBCR 703.7.1 LATH

GENERAL STRUCTURAL NOTES

CAST IN PLACE REINFORCED CONCRETE

1. ALL CONCRETE SHALL HAVE A MINIMUM COMPRESSIVE STRENGTH AT 28 DAYS OF 2500 PSI (SLABS) 3000 PSI (COLUMNS AND BEAMS), A SLUMP OF 5" PLUS OR MINUS 1", AND HAVE 2 TO 5% AIR ENTRAINMENT, AND A MAXIMUM WATER/CEMENT RATIO OF 0.63.
2. HOOKS SHALL BE PROVIDED AT DISCONTINUOUS ENDS OF ALL TOP BARS OF BEAMS.
3. HORIZONTAL FOOTING BARS SHALL BE BENT 25" AROUND CORNERS OR CORNER BARS WITH A 25" LAP PROVIDED EA. WAY.
4. CONCRETE COVER MIN. 3" WHEN EXPOSED TO EARTH OR 1 1/2" TO FORM U.N.O.
5. WELDED WIRE FABRIC SHALL CONFORM TO ASTM A1064A/ A1064M. WWF SHALL BE LAPPED AT LEAST 6" AND CONTAIN AT LEAST ONE CROSS WIRE WITHIN THE 6". POLYPROPYLENE FIBERS FOR SLABS ON GRADE TO BE MIN 1.5 LBS OF FIBER PER CUBIC YARD.
6. ALL REINFORCING STEEL / STIRRUPS AND TIES SHALL BE NEW DOMESTIC DEFORMED BARS FREE FROM RUST,SCALE & OIL & SHALL MEET ASTM A615, ASTM A706, OR ASTM A996 GRADE 40 U.N.O. REINFORCING FOR FOOTING SHALL BE SUPPORTED ON PRE-CAST CONCRETE PADS, STEEL WIRE OR PLASTIC SUPPORTS, TOP REINFORCING SHALL BE POSITIVELY SUPPORTED BY TEMPORARY STRINGERS. DOWELS FOR COLUMNS & FILLED CELLS SHALL BE SECURED IN PLACE BY USING ADDITIONAL CROSS- REINFORCING TIED TO FOOTING REINFORCING. SPLICES IN REINFORCING WHERE PERMITTED SHALL BE AS PER DETAIL MS05/1.1.
7. HIGH STRENGTH USP CIA-GEL, 7000-C ANCHORING, EPOXY ADHESIVE BINDER WAS USED IN THE DESIGN OF THIS PRODUCT. IF CONTRACTORS WISH TO USE A DIFFERENT EPOXY, THEY MUST FIRST CONTACT THE ENGINEER OF RECORD FOR WRITTEN APPROVAL.
8. WHERE PROJECT IS TO BE LOCATED IN KNOWN RADON GAS PREVALENT AREAS, APPENDIX "F" OF THE FLORIDA BUILDING CODE 8TH EDITION (2023) RESIDENTIAL IS TO BE IMPLEMENTED. F303.4 CONCRETE STRENGTH IN THESE AREAS ARE TO BE A MINIMUM OF 3000 P.S.I. THEREFORE, ANY AND ALL NOTES ON THESE PLANS THAT INDICATE 2500 P.S.I. SHALL BE REPLACED WITH 3000 P.S.I. FOR THE CONCRETE STRENGTH.

WOOD CONSTRUCTION

1. ALL EXTERIOR WOOD STUD WALLS, BEARING WALLS, SHEAR WALLS AND MISC. STRUCTURAL WOOD FRAMING MEMBERS, (I.E. BLOCKING OR GABLE END BRACING) SHALL BE EITHER AS SPECIFIED IN PLAN OR IN DETAILS. IF CONFLICTS OCCUR BETWEEN PLAN AND DETAILS, THE STRONGEST MATERIAL SHALL BE USED. AT A MINIMUM, ALL STRUCTURAL FRAMING MEMBERS SHALL BE S.P.F. #2.
2. ALL LUMBER SPECIFIED ON DRAWINGS ARE INTENDED FOR DRY USE ONLY (MOISTURE CONTENT 19% OR LESS), U.N.O. ALL WATERPROOFING AND FIRE SAFETY SYSTEMS ARE THE RESPONSIBILITY OF THE CONTRACTOR AND ARE TO BE DESIGNED AND DETAILED BY OTHERS.
3. ANY WOOD FRAME INTERIOR BEARING WALL STUDS THAT HAVE HOLES IN THE CENTER OF THE STUD UP TO 1" DIA. SHALL HAVE STUD PROTECTION SHIELDS. ALL HOLES OVER 1" IN DIA. FOR PLUMBING LINES, ETC. SHALL BE REPAIRED WITH SIMPSON HSS2 STUD SHOES,TYP., U.N.O.
4. MANY OF THE NEW PRESSURE TREATED WOODS USE CHEMICALS THAT ARE CORROSIVE TO STEEL. IT IS THE CONTRACTOR'S RESPONSIBILITY TO VERIFY THE TYPE OF WOOD TREATMENT AND TO SELECT APPROPRIATE CONNECTORS THAT RESIST CORROSION. FOR EXAMPLE, ACQ-C, ACQ-D, CBA-A OR CA-B REQUIRE HOT-DIPPED GALVANIZED OR STAINLESS STEEL FASTENERS. DOT SODIUM BORATE (SBX) DOES NOT.
5. ALL EXPOSED WOOD OR WOOD IN CONTACT WITH EARTH OR CONCRETE TO BE PRESSURE TREATED.
6. UNTREATED WOOD SHALL NOT BE IN DIRECT CONTACT WITH CONCRETE, OR MASONRY SEAT PLATES SHALL BE PROVIDED AT BEARING LOCATIONS WITHOUT WOODEN TOP PLATES.
7. SEE PLAN FOR STUD PACK AND BEAM NAILING PATTERNS.
8. ALL ENGINEERING LUMBER TO HAVE THE FOLLOWING MIN VALUES U.N.O.
   PARALLAM COLUMNS: 1.8E Fb = 2400 PSI
   MICROLAM (LVL)BEAMS: 2.0E Fb= 2600 PSI
   GLULAM BEAMS: SP/SP 24F-V5 LAYUP (1.7E Fb = 2400 PSI) MIN.
9. SEE PLAN NOTE FOR ADDITIONAL ROOF, WALL, SHEAR WALL AND FLOOR SHEATHING REQUIREMENTS ALONG W/ NAILING INFORMATION OTHERWISE:
   c. ROOF DECK: PLYWOOD C-C/C-D, EXTERIOR OR OSB
   FLOOR SHEATHING: 3/4" T&G WOOD DECKING GROUP 1 APA RATED (48/24) SHEATHING SHALL FINISH FLUSH TO EXTERIOR WALL FACE
   WALL SHEATHING: 7/16" STRUCTURAL I OSB (EXPOSURE 1)-OR-15/32" OSB PLYWOOD (C-C/C-D) (EXPOSURE1) MINIMUM OF 1/8" SPACE IS RECOMMENDED BETWEEN PANELS, AT EDGES, AND END JOINTS TO ALLOW FOR EXPANSION. SHEATHING SHALL NOT BE USED AS WEATHER RESISTANCE BARRIER UNLESS SPECIFIED.
10. LATH AND LATH ATTACHMENTS SHALL BE OF CORROSION-RESISTANT MATERIALS. EXPANDED METAL OR WOVEN WIRE LATH SHALL BE ATTACHED TO WOOD SHEATHING WITH 1-1/2" LONG, 11 GAUGE NAILS HAVING A 7/16" HEAD, OR 1 1/2" LONG, 16 GAUGE STAPLES SPACED IN ACCORDANCE WITH ASTM C1063 OR C1787, OR AS OTHERWISE APPROVED.

STRUCTURAL STEEL

1. MATERIAL SPECIFICATIONS: WIDE FLANGE SECTIONS: ASTM A992, GRADE 50, Fy=50 KSI TUBE STEEL (HSS): ASTM A500, GRADE B, Fy = 46 KSI PIPE STEEL: ASTM A53, TYPE E OR S, Fy = 35 KSI ALL OTHER STRUCTURAL & MISC. STEEL: A36 Fy=36 KSI STRUCTURAL CONNECTIONS: ALL STRUCTURAL BOLTS TO BE ASTM A325N U.N.O
2. STRUCTURAL BOLTS SMALLER THAN 5/8" DIA. TO BE A307 THREADED ROD SHALL CONFORM TO A36 OR A307 ANCHOR BOLTS SHALL CONFORM TO ASTM F1554 ALL BOLTS CAST IN CONCRETE: ASTM A36 OR ASTM A-307 SHOP AND FIELD WELDS: E70XX ELECTRODES STEEL REINFORCEMENT SHOP DRAWINGS TO BE PROVIDED TO ENGINEER OF RECORD BEFORE FABRICATION FOR REVIEW AND APPROVAL

UPLIFT CONNECTORS

1. UPLIFT CONNECTORS SUCH AS HURRICANE CLIPS, TRUSS ANCHORS AND ANCHOR BOLTS ARE ONLY REQUIRED ON MEMBERS IN WALLS THAT ARE EXPOSED TO UPLIFT OR LATERAL FORCES. INTERIOR LOAD BEARING WALLS ARE NOT ALWAYS EXPOSED TO UPLIFT FORCES. THE MEMBERS OF THESE WALLS WOULD NOT NEED TO HAVE CONNECTORS APPLIED. PLEASE COORDINATE WITH THE TRUSS ENGINEER FOR THE LOCATION OF THESE WALLS.AND STRUCTURAL PLANS FOR MORE INFO.

GYPSUM BOARD

1. GYPSUM BOARD MAY BE INSTALLED USING GWB54 NAILS TO SET IN PLACE. FIELD FASTENING SHOULD BE TYPE "W" 1 1/4" DRYWALL SCREWS AT 12" O.C. FOR CEILINGS AND 1 1/8" DRYWALL SCREWS AT 12" O.C. FOR WALLS. ALL ENDS AND EDGES OF WALLBOARD SHALL OCCUR OVER AND BE SCREWED TO SUPPORTS. MAXIMUM SCREW SPACING FOR WALLS SHALL BE 16" O.C. ALONG SUPPORTS. MAXIMUM SCREW SPACING FOR CEILINGS SHALL BE 12" O.C. ALONG SUPPORTS. MINIMUM SCREW / NAIL DISTANCE FROM EDGE SHALL BE 3/8". THIS SHALL APPLY TO BOTH CEILING AND WALL INSTALLATION. DRYWALL SHIMS SHALL BE USED ONLY WHERE NECESSARY. OPENINGS CUT FOR OUTLETS, SWITCHES, ETC., SHALL BE OF A TOLERANCE THAT CAN BE COVERED ADEQUATELY WITH NORMAL SWITCH PLATES AND COVERS WITHOUT ADDITIONAL TAPING OR CAULKING. DRYWALL SHALL NOT BE INSTALLED WITHOUT PROPER BACKING.

PRE ENGINEERED WOOD TRUSSES

1. ALL PREFABRICATED WOOD TRUSSES SHALL BE SECURELY FASTENED TO THEIR SUPPORTING WALLS OR BEAMS WITH HURRICANE CLIPS OR ANCHORS PER STRUCTURAL PLAN
2. PREFABRICATED WOOD TRUSSES SHALL BE DESIGNED IN ACCORDANCE WITH THE LATEST EDITION OF THE "NATIONAL DESIGN SPECIFICATION FOR STRESS-GRADE LUMBER AND ITS FASTENERS" AS RECOMMENDED BY THE NATIONAL FOREST PRODUCTS ASSOCIATION.
3. TRUSS MEMBERS AND CONNECTIONS SHALL BE PROPORTIONED (WITH A MAXIMUM ALLOWABLE STRESS INCREASE FOR LOAD DURATION OF 25%) TO WITHSTAND THE LIVE LOADS GIVEN IN THE NOTES AND TOTAL DEAD LOAD.
4. BRIDGING FOR PRE-ENGINEERED TRUSSES SHALL BE AS REQUIRED BY THE TRUSS MANUFACTURER UNLESS NOTED ON THE PLANS.
5. TRUSS ELEVATIONS AND SECTIONS ARE FOR GENERAL CONFIGURATION OF TRUSSES ONLY. WEB MEMBERS ARE NOT SHOWN, BUT SHALL BE DESIGNED BY THE TRUSS MANUFACTURER IN ACCORDANCE WITH THE FRAMING DESIGN LOADS:
6. DESIGN SPECIFICATIONS FOR LIGHT WEIGHT METAL PLATE CONNECTED WOOD TRUSSES PER THE TRUSS PLATE INSTITUTE TPI LATEST EDITION.
7. PRE-ENGINEERED WOOD TRUSSES SHALL BE DESIGNED BY THE MANUFACTURER IN ACCORDANCE WITH SPECIFIED LOADS AND GOVERNING CODES . SUBMITTALS SHALL INCLUDE TRUSS FRAMING PLANS AND DETAILS SHOWING MEMBER SIZES, BRACING, ANCHORAGE, CONNECTIONS, TRUSS LOCATIONS, AND PERMANENT BRACING AND/OR BRIDGING AS REQUIRED FOR ERECTION AND FOR THE PERMANENT STRUCTURE. EACH SUBMITTAL SHALL BE SIGNED AND SEALED BY A FLORIDA REGISTERED STRUCTURAL ENGINEER. SUBMIT 3 COPIES FOR REVIEW AND APPROVAL PRIOR TO FABRICATION.
8. THE TRUSS MANUFACTURER SHALL DETERMINE ALL SPANS WORKING POINTS, BEARING POINTS, AND SIMILAR CONDITIONS. TRUSS SHOP DRAWINGS SHALL SHOW ALL TRUSSES, ALL BRACING MEMBERS, AND ALL TRUSS TO TRUSS HANGERS.

FIELD REPAIR NOTES (WOOD)

1. MISSED FA3 FOUNDATION ANCHORS CAN BE REPAIRED WITH ⅜"ø x 6" LG. HEAVY-DUTY SCREW ANCHORS (WEDGE-BOLT OR EQUAL) W/ 3"x3"x¼" PL. WASHER W/ MIN. 1¾" EDGE DISTANCE. INSTALL HEAVY-DUTY SCREW ANCHOR WITHIN 3" OF WHERE FA3 FOUNDATION ANCHOR WAS TO BE LOCATED.
2. SHEATHING FASTENERS SHALL NOT BE OVERDRIVEN BY MORE THAN 1/16" UNDER DRY CONDITIONS (MOISTURE CONTENT LESS THAN 16 PERCENT). IF LESS THAN 20 PERCENT OF FASTENERS ARE OVERDRIVEN BY MORE THAN 1/16" AND 1/8" OR LESS THEN NO REPAIR IS REQUIRED. IF MORE THAN 20 PERCENT OF FASTENERS ARE OVERDRIVEN BY MORE THAN 1/16" AND 1/8" OR LESS -OR- IF ANY ONE FASTENER IS OVERDRIVEN MORE THAN 1/8" THEN REPAIR IS REQUIRED. FOLLOW REPAIR RECOMMENDATIONS BELOW:
   2.1. MULTIPLE ADJACENT FASTENERS OVERDRIVEN BY MORE THAN 1/16" AND 1/8" OR LESS: INSTALL (1) 8d NAIL FOR EVERY (2) OVERDRIVEN FASTENERS - LOCATE NEW 8d NAIL IN BETWEEN THE OVERDRIVEN FASTENERS
   2.2. SINGLE FASTENER OVERDRIVEN BY MORE THAN 1/16" AND 1/8" OR LESS SPACED MORE THAN 6" AWAY FROM NEXT ADJACENT OVERDRIVEN FASTENER: INSTALL (1) 8d NAIL AT EVERY OVERDRIVEN FASTENER - LOCATE APPROXIMATELY 1" AWAY FROM OVERDRIVEN FASTENER
   2.3. SINGLE FASTENER OVERDRIVEN MORE THAN 1/8": INSTALL (1) 8d NAIL AT EVERY OVERDRIVEN FASTENER - LOCATE APPROXIMATELY 1" AWAY FROM OVERDRIVEN FASTENER
   2.4. INSTALLATION OF ADDITIONAL NAILS SHALL NOT CAUSE WOOD FRAMING TO SPLIT. IF INSTALLATION OF REPAIR NAILS WOULD CAUSE THE NAIL SPACING OF A SINGLE ROW OF NAILS TO BE LESS THAN 3" THEN 16 GA. x 1 ¾" STAPLES SHALL BE USED FOR REPAIR FASTENERS AND BE INSTALLED AT A 1:1 RATE FOR OVERDRIVEN FASTENERS IN ALL CASES. IF SPLITTING OF WOOD FRAMING IS OBSERVED THEN STOP IMMEDIATELY AND CONTACT E.O.R. FOR RECOMMENDATIONS.
3. FOR ALL OTHER REPAIRS/MODIFICATIONS CONTACT E.O.R. FOR RECOMMENDATIONS.

STRUCTURAL DESIGN CRITERIA

CODE CRITERIA

- FLORIDA BUILDING CODE 8TH EDITION (2023) RESIDENTIAL
- FLORIDA FIRE PREVENTION CODE 8TH EDITION (2023)
- FLORIDA BUILDING CODE ACCESSIBILITY 8TH EDITION (2023) RESIDENTIAL
- NFPA 70-20, NATIONAL ELECTRICAL CODES (NEC 2020)
- BUILDING CODE REQUIREMENTS FOR STRUCTURAL CONCRETE - (ACI 318-19)
- SPECIFICATIONS FOR STRUCTURAL CONCRETE - (ACI 301-20)
- BUILDING CODE REQUIREMENTS FOR MASONRY STRUCTURES - (ACI 530-13)
- NATIONAL DESIGN SPECIFICATION FOR WOOD CONSTRUCTION - 2018 EDITION
- WOOD FRAMED CONSTRUCTION MANUAL 2018 EDITION
- APA PLYWOOD DESIGN SPECIFICATION E30-19
- AMERICAN SOCIETY OF CIVIL ENGINEERS: ASCE/SEI 7-22
- ALUMINUM DESIGN MANUAL - AAF-20 (AA ADM-2020)

Code references are summaries of code sections. See FBCR (Current Version) for complete information.

Scan QR Code for the complete FBCR

GENERAL ROOF LOADING

	SHINGLE ROOF (PSF)	METAL ROOF (PSF)	TILE ROOF (PSF)	HEAVY ROOF (PSF)
TOP CHORD LL TOP CHORD DL	16 7	20 10	20 15	20 25
BOTTOM CHORD LL* BOTTOM CHORD DL	0 10	0 10	0 10	0 10
TOTAL (PSF)	33	40	45	55
BOTTOM CHORD LL (OPT) ATTICS W/ LIMITED STORAGE ATTICS W/ HEAVY STORAGE * ATTICS W/ NO STORAGE (NON-CONCURRENT)	 20 50 10			

NOTE: LL REDUCTIONS ARE ALLOWED PER CODE BUT ONLY WITH WRITTEN APPROVAL FROM EOR OR INDICATED ON PLAN

GENERAL FLOOR LOADING

TOP CHORD LL TOP CHORD DL	40 (PSF) 10 (PSF)	COMMENTS:
BOTTOM CHORD LL BOTTOM CHORD DL	0 (PSF) 5 (PSF)	

SPECIAL FLOOR LOADING

GAME ROOM	60(PSF)	LIBRARY READING ROOMS	60(PSF)
BALCONIES/DECKS	40(PSF)	LIBRARY STACK ROOMS	150(PSF)
BALCONIES OVER 100 SQ. FT.	100(PSF)	NON-SLEEPING ROOMS	40(PSF)
LIGHT STORAGE	125(PSF)	SLEEPING ROOMS	30(PSF)
GUARDRAILS	200(LBS)(h,i)	HABITABLE ATTICS SERVED	
HANDRAILS(d)	200(LBS)(h)	w/ FIXED STAIRS	30(PSF)
GUARDRAIL IN-FILL COMP.(f)	50(LBS)(h)	PASSENGER VEH. GAR.	50(PSF) 2000(LBS)
STAIRS(c)	40 (PSF) 300(LBS)		

COMMENTS:
(PSF) = UNIFORM LOADS
(LBS) = CONCENTRATED LOADS
c. INDIVIDUAL STAIR TREADS SHALL BE CAPABLE OF SUPPORTING THE UNIFORMLY DISTRIBUTED LIVE LOAD OR A 300-POUND CONCENTRATED LOAD APPLIED ON AN AREA OF 2 INCHES BY 2 INCHES, WHICHEVER PRODUCES THE GREATER STRESSES.
d. A SINGLE CONCENTRATED LOAD APPLIED IN ANY DIRECTION AT ANY POINT ALONG THE TOP. FOR A GUARD NOT REQUIRED TO SERVE AS A HANDRAIL, THE LOAD NEED NOT BE APPLIED TO THE TOP ELEMENT OF THE GUARD IN A DIRECTION PARALLEL TO SUCH ELEMENT.
f. BALUSTERS AND PANELS FILLERS SHALL BE DESIGNED TO WITHSTAND A HORIZONTALLY APPLIED NORMAL LOAD OF 50 POUNDS ON AN AREA EQUAL TO 1 SQ. FT.
h. GLAZING USED IN HANDRAIL ASSEMBLIES AND GUARDS SHALL BE DESIGNED WITH A LOAD ADJUSTMENT FACTOR OF 4. THE LOAD ADJUSTMENT FACTOR SHALL BE APPLIED TO EACH OF THE CONCENTRATED LOADS APPLIED TO THE TOP OF THE RAIL, AND TO THE LOAD ON THE IN-FILL COMPONENTS. THESE LOADS SHALL BE DETERMINED INDEPENDENT OF ONE ANOTHER, AND LOADS ARE ASSUMED NOT TO OCCUR WITH ANY OTHER LIVE LOAD.
i. WHERE THE TOP OF A GUARD SYSTEM IS NOT REQUIRED TO SERVE AS A HANDRAIL, THE SINGLE CONCENTRATED LOAD SHALL BE APPLIED AT ANY POINT ALONG THE TOP, IN THE VERTICAL DOWNWARD DIRECTION AND IN THE HORIZONTAL DIRECTION AWAY FROM THE WALKING SURFACE. WHERE THE TOP OF A GUARD IS ALSO SERVING AS THE HANDRAIL, A SINGLE CONCENTRATED LOAD SHALL BE APPLIED IN ANY DIRECTION AT ANY POINT ALONG THE TOP. CONCENTRATED LOAD SHALL NOT BE APPLIED CONCURRENTLY.

DEFLECTION CRITERIA

ROOF TRUSSES* ROOF RAFTERS ROOF RAFTERS (W/O CLG) FLOOR TRUSSES/ BEAMS ** FLOOR I-JOIST***	LL/240 LL/180 LL/360 LL/360 LL/480	TL/180 TL/120 TL/240 TL/240 TL/240	COMMENTS:

*TL MAX 1 1/4" UP TO 40FT SPAN
**TL MAX 3/4"
***TL MAX 1/2"

WIND LOADING CRITERIA 140-B

WIND SPEED (ULTIMATE)	140 MPH
WIND SPEED (ALLOWABLE)	108.0 MPH
EXPOSURE CATEGORY	B
BUILDING CATEGORY	II
BUILDING TYPE	V
ENCLOSURE CLASSIFICATION	ENCLOSED
INTERNAL PRESSURE COEFFICIENT	+/- 0.18

NOTE: MEAN ROOF HEIGHT FOR TYPICAL SINGLE STORY HOME IS 15FT, AND FOR 2 STORY HOME IS 25FT

ASCE 7-22 WALL DESIGN ALLOWABLE COMPONENTS AND CLADDING WIND PRESSURES AND SUCTIONS

FOR MEAN ROOF HEIGHT ≤ 30 ft

GENERAL PRESSURE NOTES

NOTES:
1. MULTIPLY BY 1.67 TO GET ULTIMATE WIND PRESSURES.
2. "a" = END ZONE IS ONLY W/IN 4'-0" OF ALL EXTERIOR BUILDING CORNERS.
   * INDICATED PRESSURES CAN BE INTERPOLATED FOR OTHER DOOR SIZES, OTHERWISE USE LOAD ASSOCIATED WITH THE LOWER EFFECTIVE AREA.

DESIGNATED AREAS WHERE THE ULTIMATE WIND SPEED IS 140 MPH OR GREATER, CONTRACTOR TO PROVIDE ADDITIONAL INFORMATION AS REQUIRED FOR PERMITTING TO INCLUDE IMPACT GLAZING, SHUTTERS, OR WOOD STRUCTURE PANELS PER THE FBCR R301.2.1.2 PROTECTION OF OPENINGS.

FOR COUNTY USE ONLY

01/20/2025

To the best of the Engineer's knowledge, information and belief, the structural plans and specifications contained within these drawings comply with the Florida Building Code 8th Edition (2023) Residential. Engineer's signature and seal is only for the structural engineering portions of the drawing pages bearing Engineer's signature and seal.

CA No. 9161 AA26003115

TSG Making Dreams Come True
TOTAL SOLUTIONS GROUP
258 Southhall Lane, Suite 200
Maitland, Florida, 32751
(407) 880 2333
100% Employee Owned
myTSGhome.com

MARONDA Homes
3969 West First Street
Sanford, FL 32771
(407)302-9871

Community: Forest Cove
Plan Name: Livorno
Elev - J
Garage Side: Left
Lot: 6
Block:
Address: TBD SW Cadence Glen Lake City, FL 32024
Job no. 9FC00601
Renaissance Series
Reference No. 25-00449
Sheet: SN

STRUCT NOTES

CARLOS.DAVILA 1/17/2025

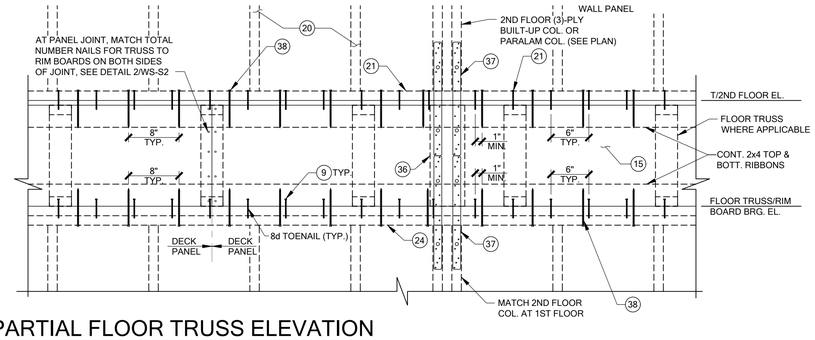

7 PARTIAL FLOOR TRUSS ELEVATION
SCALE: N.T.S.

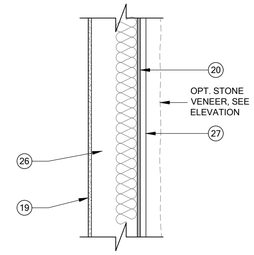

4 PARTIAL SECTION - TWO STORY OPENING
SCALE: N.T.S.

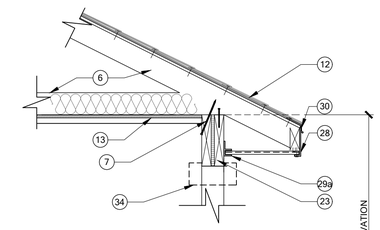

B. ROOF

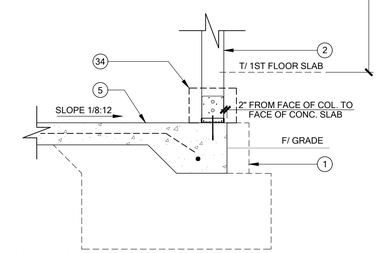

A. FOUNDATION

2 ONE STORY WALL SECTION - PORCH
SCALE: N.T.S.

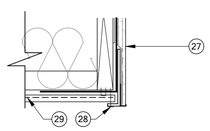

9A SOFFIT CONNECTION
SCALE: N.T.S.

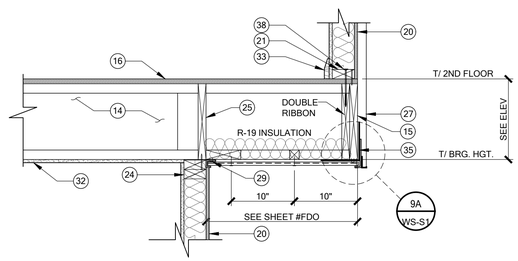

6 PARTIAL SECTION - FLOOR OVERHANG
SCALE: N.T.S.

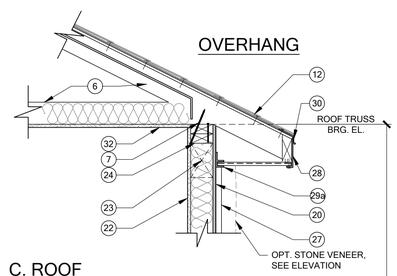

C. ROOF

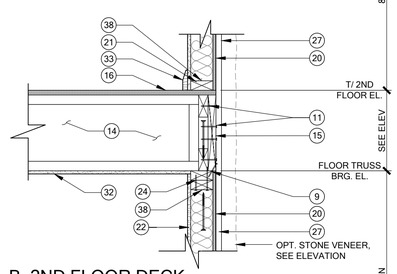

B. 2ND FLOOR DECK

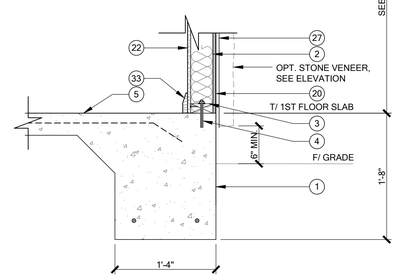

A. FOUNDATION

3 TWO STORY WALL SECTION - STANDARD
SCALE: N.T.S.

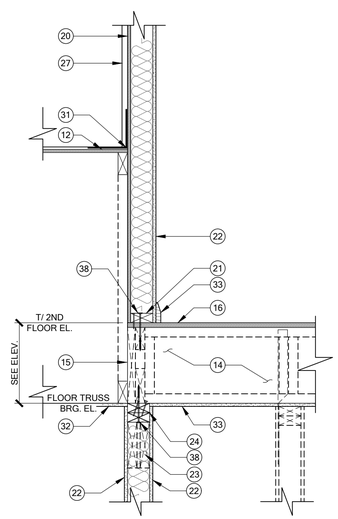

8 PARTIAL SECTION - FLOOR TRUSS TO ROOF
SCALE: N.T.S.

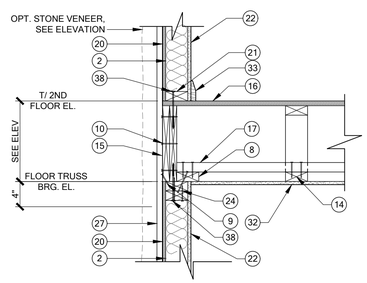

5 PARTIAL SECTION - SIDE WALL
SCALE: N.T.S.

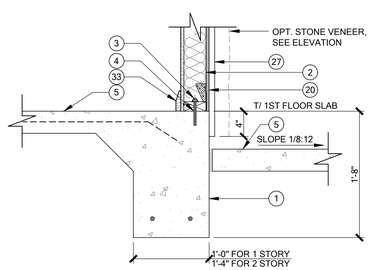

10 PARTIAL SECTION - SIDE WALL
SCALE: N.T.S.

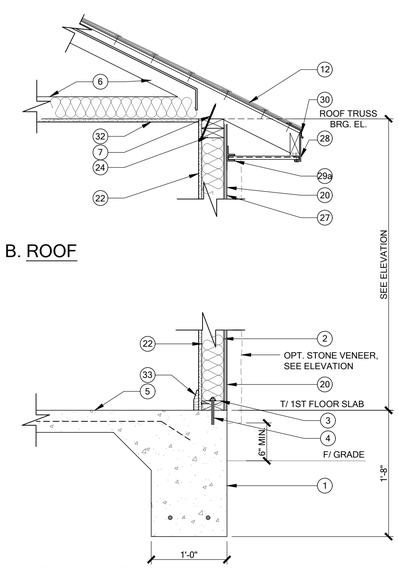

B. ROOF

A. FOUNDATION

1 ONE STORY WALL SECTION - STANDARD
SCALE: N.T.S.

WALL SECTION KEY NOTES

1. MONOLITHIC CONCRETE FOUNDATION, SEE FOUNDATION PLAN.
2. 2x4 SYP #2 WOOD WALL OR COLUMN, SEE PLAN FOR SIZE, SPACING & CONNECTORS.
3. (1) P.T. #2 SYP 2x4 SILL PLATE (UNLESS NOTED).
4. SEE FM30/1.1 FOR TYPICAL SILL PLATE FASTENING - ANCHORS OR HOLDOWNS SHALL BE INSTALLED 6"-12" FROM THE END OF ALL SILL PL.'S & MIN. (2) ANCHORS OR HOLDOWNS SHALL BE INSTALLED IN EVERY SEPARATE PIECE OF SILL PL.
5. CONCRETE SLAB (SEE PLAN)
6. PRE-ENGINEERED ROOF TRUSSES @ 24" O.C., MAX. INSULATION PER FBC AND ENERGY FORM SUBMITTED WITH PERMIT APPLICATION w/ OPEN BAFFLE. @ A/C SPACE LOCATIONS.
7. TRUSS CONNECTOR, SEE FRAMING PLAN.
8. CONT. 2x4 SYP #2 PLATE FASTENED TO TOP PL. W/ 12d TOENAILS @ 8" O.C.
9. TOENAIL RIM BOARD TO DOUBLE TOP PLATE W/ 8d NAILS @ 6" O.C.
10. FASTEN MULTIPLE PLY RIM BOARDS TOGETHER W/ (3) ROWS OF 8d NAILS @ 12" O.C.
11. FASTEN RIM BOARD TO TOP & BOTTOM RIBBONS W/ 8d NAILS @ 6" O.C. & FASTEN RIM BOARD TO EA. FLOOR TRUSS W/ (2) 8d NAILS
12. ROOF ASSEMBLY:
    UNDERLAYMENT SHALL CONFORM WITH R905.1.1.1. AND PER TABLE R905.1.1.1.
    FIBERGLASS SHINGLES, ASTM D 225, ASTM D 3462, ASTM D 3161
    ATTACH w/ (6) 1 1/4" 11-12GA. w/ 3/8" HEAD ROOFING THROUGH NAIL PER STRIP OR (2) PER INDIVIDUAL SHINGLE, ASPHALT SHINGLES OR FOLLOW MANUFACTURER INSTRUCTIONS FOR PRODUCT.

    METAL ROOF OPTION: C&C ROOF PRESSURES MRH 30'
    160/B HIP ZONE 1= -34.78, ZONE = -47.94, ZONE 3 = -47.94
    GABLE ZONE 2 = -59.03, ZONE 3 = -70.03
    160/C HIP ZONE 1= -49.95, ZONE 2 = -68.85, ZONE 3 = -68.85
    GABLE ZONE 1 = -49.95, ZONE 2 = -68.85, ZONE 3 = -68.85

    26GA. GALV. STEEL 4x4 L FLASHING

    UNDERLAYMENT SHALL BE PER FBC R905.1.1 OVER SHEATHING. SEE MANUFACTURER INSTALLATION INSTRUCTIONS.

    ROOF SHEATHING AND NAILING PER SPECIFICATION IN ENGINEERED ROOF SHEATHING & NAILING DETAIL(RSH) ON FRAMING PLAN FOR EACH ROOFING MATERIAL AND ZONE
13. PORCH CEILINGS
    FRONT PORCHES: 7/16" OSB ON UNDERSIDE OF ROOF TRUSSES. ATTACH OSB TO TRUSSES w/8d NAILS OR 7d SCREW SHANK @ 4" O.C. EDGES & FIELD. w/ EXTERIOR FINISH OF VENTED SOFFIT AND J-CHANNEL, STAPLE SOFFIT TO SUBSTRATE @ 8" O.C. INSTALL TRIM NAIL IN CENTER RIB OF PANEL @ 16" O.C.; ATTACH J-CHANNEL W/ 3/8" x 5/8" STAPLE @ 24" O.C. INTO OSB SUBSTRATE.

    REAR PORCHES: TEXTURED PAINTED: 1/2" EXTERIOR GYPSUM SOFFIT BOARD SHALL BE ATTACHED TO ALL FRAMING MEMBERS WITH 2X BLOCKING PROVIDED AT PERIMETER. THE GYPSUM BOARD SHALL BE ATTACHED w/ TYPE 'W' 1 1/4" DRYWALL SCREWS @ 8" O.C. IN FIELD AND EDGES
14. PRE-ENGINEERED WOOD FLOOR TRUSS @ 24" O.C. (MAX.). SEE SECOND FLOOR FRAMING PLAN.
15. WOOD RIM BOARD - SEE DETAIL 2/WS-S2 FOR CONNECTION REQUIREMENTS
16. 3/4" T&G WOOD DECKING GLUED AND ATTACHED w/ 8d X 2 1/2" SCREW SHANK NAIL @ 6" O.C. EDGES AND 12" O.C. FIELD OR16GA. X 1 3/4" STAPLE @ 2" O.C. EDGES AND 4" O.C. FIELD,SEE SECOND FLOOR FRAMING SHEET, GLUE BETWEEN SHT'G AND TRUSSES.
17. 2x4 #2 SYP HORIZ. FLAT BRACE @ 48" O.C. (EXTENDED MIN. (4) TRUSS BAYS) - FASTEN TO EA. TRUSS BOTTOM CHORD W/ (4) 10d NAILS
18. NOT USED
19. 1/2" DRYWALL ON 2X6 #2 SYP WOOD STUDS @ 16" O.C., U.N.O., SEE PLAN FOR SPACING, AND R-13 INSULATION AS REQUIRED
20. 7/16" STRUCTURAL I OSB EXPOSURE 1-OR-15/32" OSB SHEATHING ON EXT. WALLS w/ ALL EDGES BLOCKED ATTACH w/ 8d NAILS @ 3" O.C. EDGES AND 6" O.C. FIELD OR 16GA. X 1 3/4" STAPLE @ 2" O.C. EDGES AND 4" O.C. FIELD.
21. 2x4 #2 SYP BOTTOM PLATE, NAILED w/ 10d NAIL @ 6" O.C. TO 2x RIBBON OR INSIDE PLY OF DOUBLE PLY RIM BOARD.
22. 1/2" DRYWALL ON 2x4 #2 SYP WOOD STUDS @ 16" O.C. AND INSULATION PER FBC AND ENERGY FORM SUBMITTED WITH PERMIT APPLICATION.
23. 2X WOOD HEADER OR BEAM @ OPENING, SEE SECOND FLOOR PLAN FOR SIZE & CONNECTORS.
24. (2) 2x4 #2 SYP TOP PLATES
25. SOLID BLOCKING BETWEEN FLOOR TRUSSES.
26. 2x6 #1 SYP STUDS @ 16" O.C. OR 2x6 #2 SYP STUDS @ 12" O.C. @ AREAS OPEN FROM FIRST FLOOR TO 2ND FLOOR CEILING. STUDS SHALL BE CONT. FROM P.T. 2x6 SILL PL. TO (2) 2x6 TOP PL. ATTACHED STUDS TO TOP PL. & SILL PL. W/ (1) USP MP7 FRAMING ANGLE EA. END W/ (10) 10d x1 ½" NAILS.
27. VINYL SIDING OR HARDI PANEL (STONE VENEER DASHED) - SEE ARCH. DWG'S. FOR REQUIREMENTS & INSTALL ALL COVERINGS PER MANUFACTURER RECOMMENDATIONS.
28. R704.3 ALUMINUM FASCIA.

    ALUMINUM FASCIA SHALL HAVE A MINIMUM THICKNESS OF 0.019 INCHES AND BE INSTALLED IN ACCORDANCE WITH THE MANUFACTURER'S INSTRUCTIONS AND THIS CODE. FASTENERS SHALL BE ALUMINUM OR STAINLESS STEEL. ALUMINUM FASCIA SHALL BE ATTACHED IN ACCORDANCE WITH SECTION R704.3.1, R704.3.2 OR R704.3.3. THE DRIP EDGE SHALL COMPLY WITH R905.2.8.5, AND THE THICKNESS OF THE DRIP EDGE SHALL BE IN ACCORDANCE WITH TABLE R903.2.1.
29. VENTED SOFFIT AND J-CHANNEL, STAPLE SOFFIT TO SUB-FASCIA w/ 1/4" CROWN X 3/4" LEG STAPLE@ EACH OF THE FOLLOWING LOCATIONS, THE MALE & FEMALE LAP AND CENTER FLUTE. SUBSTRATE ATTACHMENT: J-CHANNEL: WOOD - ATTACH w/ 1/4" X 3/4" LEG STAPLE IN DIAMOND PATTERN @ 12" O.C.

29a. VENTED SOFFIT AND F-CHANNEL, STAPLE SOFFIT TO SUB-FASCIA w/ 1/4" CROWN X 3/4" LEG STAPLE @ 8" O.C. SUBSTRATE ATTACHMENT; F-CHANNEL; WOOD - ATTACH w/ 1/4" CROWN X 3/4" LEG STAPLE IN DIAMOND PATTERN @ 24" O.C. MASONRY - ATTACH w/ 14ga. 5/8" T-NAIL W/ 3/8" DIAMETER HEAD @ 8" O.C.

30. METAL DRIP EDGE.
31. VALLEY FLASHING, AS REQUIRED.
32. 1/2" CEILING BOARD INSULATION PER FBC AND ENERGY FORM SUBMITTED WITH PERMIT APPLICATION.
33. WOOD BASE (SEE ARCH. DWG'S.)
34. PIER BASE AND CAP TRIM, SEE EXTERIOR ELEVATIONS.
35. MSTA 12 @ END TRUSS AND 24" O.C., INSTALL 6" UP ON RIM BOARD AND 6" ON UNDERSIDE OF TRUSS.
36. PROVIDE (1) VERT. 2x6 BLOCK BETWEEN TOP & BOTT. RIBBONS & (1) ADDITIONAL VERT. 2x6 BLOCK TO INSIDE OF RIBBONS - FASTEN BLOCKS TOGETHER & TO TOP & BOTT. RIBBON W/ (4) 10d NAILS IN EACH (ONLY (1) VERT. 2x6 BLOCK REQ'D. @ DOUBLE RIM BOARD W/ SAME FASTENING)
37. FASTEN 2ND FLOOR COL. TO RIM BOARD W/ (2) MSTA18'S & FASTEN RIM BOARD TO 1ST FLOOR COL. W/ (2) MSTA18'S
38. FRAMEFAST F6.0FL SCREWS @ 8" O.C. MAX.

FOR COUNTY USE ONLY

01/20/2025

To the best of the Engineer's knowledge, information and belief, the structural plans and specifications contained within these drawings comply with the Florida Building Code 8th Edition (2023) Residential. Engineer's signature and seal is only for the structural engineering portions of the drawing pages bearing Engineer's signature and seal.

CA No. 9161 AA26003115

TSG Making Dreams Come True
TOTAL SOLUTIONS GROUP
258 Southhall Lane, Suite 200
Maitland, Florida, 32751
(407) 880 2333
100% Employee Owned
myTSGhome.com

MARONDA Homes
3999 West First Street
Sanford, FL 32771
(407)302-9671

Community: Forest Cove
Plan Name: Livorno
Elev - J
Garage Side: Left
Lot: 6
Block:
Address: TBD SW Cadence Glen Lake City, FL 32024
Job no.: 9FC00601
Renaissance Series
Reference No. 25-00449
Sheet: WS-S1
STANDARD

CARLOS.DAVILA 1/17/2025

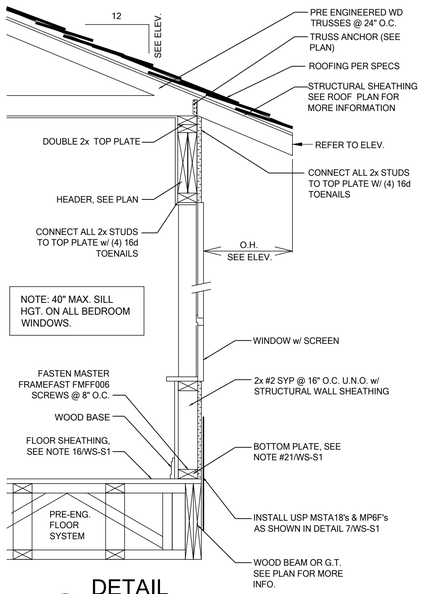

WF31 DETAIL
TYPICAL WALL SECTION
SCALE: N.T.S.

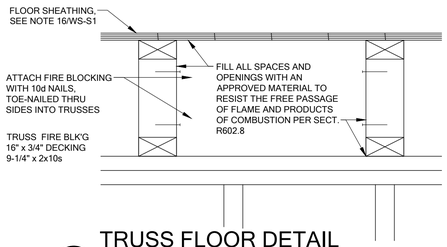

3 TRUSS FLOOR DETAIL
FIRE BLOCKING
SCALE: N.T.S.

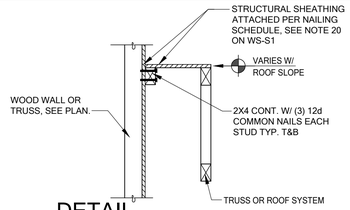

8 DETAIL
SHEAR TRANSFER EXTERIOR WALL
SCALE: N.T.S.

10 ALTERNATE NON-DROP GABLE END DETAIL
SCALE: N.T.S

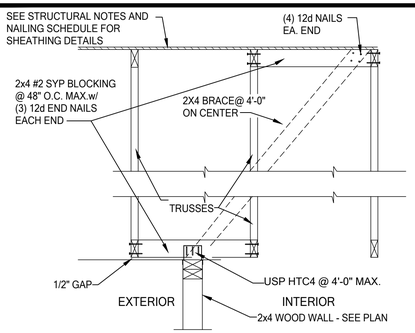

TB14 NON-BRG. EXTERIOR WALL
SCALE: N.T.S.

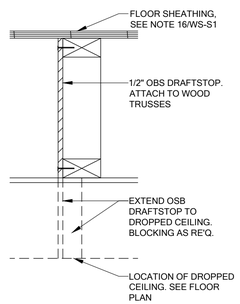

1 TRUSS FLOOR DETAIL
DRAFT STOPPING
SCALE: N.T.S.

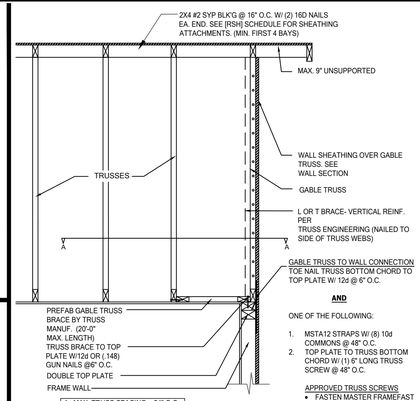

GE24 DETAIL
GABLE BRACING W/ WIND TRUSS
SCALE: N.T.S.

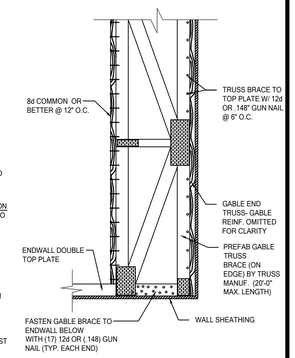

SECTION A-A @ TRUSS BRACING
PLAN VIEW

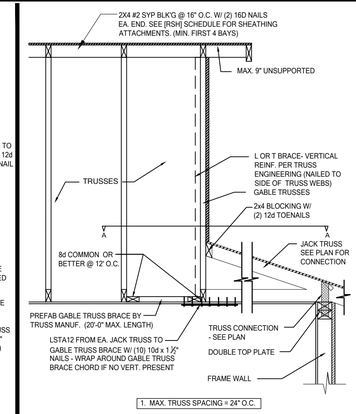

GE27 DETAIL
DUTCH GABLE BRACING W/ WIND TRUSS
SCALE: N.T.S.

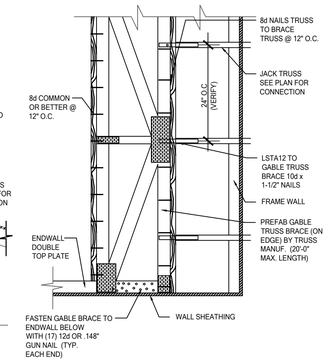

SECTION A-A @ TRUSS BRACING
PLAN VIEW

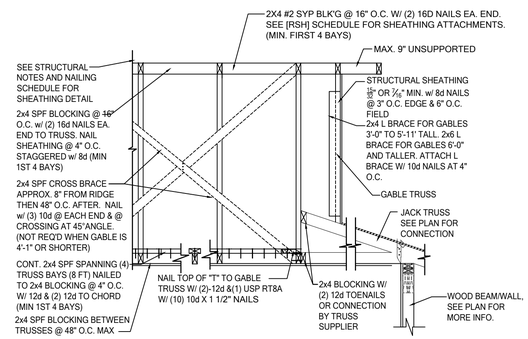

GE26 DETAIL
SECTION @ DUTCH GABLE W/ VALLEY TRUSS
SCALE: N.T.S.

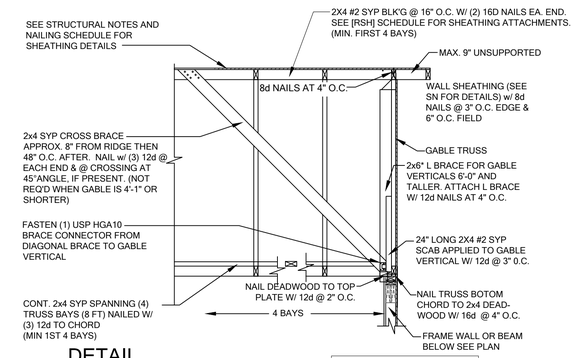

6 DETAIL
GABLE END WITHOUT VOLUME CEILING (FRAMING)
SCALE: N.T.S.

*T-BRACE OR L-BRACE MUST BE SAME SPECIES AND GRADE (OR BETTER) AS WEB MEMBER

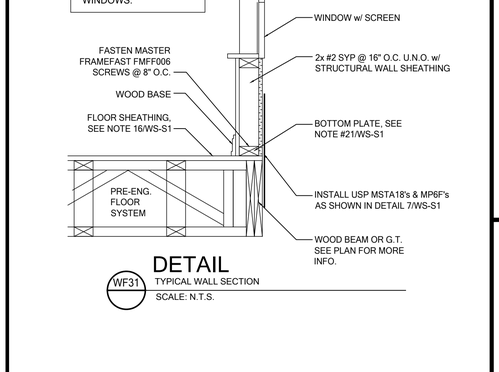

4 TRUSS FLOOR DETAIL
TYPICAL INTERIOR BEARING WALL
SCALE: N.T.S.

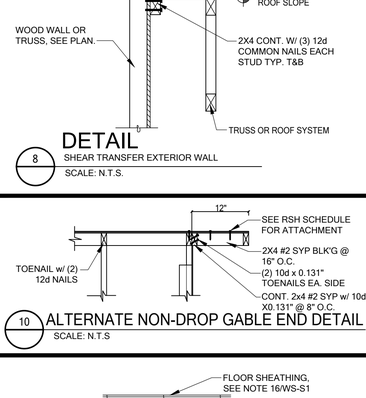

2 TRUSS FLOOR DETAIL
DECK CONNECTION @ PANEL JOINT
SCALE: N.T.S.

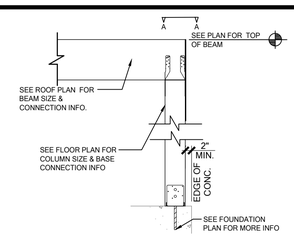

CD11 COMMON BM. ATTACHMENT
SCALE: N.T.S.

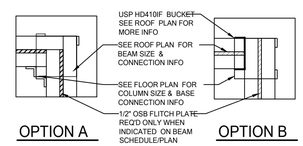

SECTION A-A - COMMON BM. TO POST ATTACHMENT

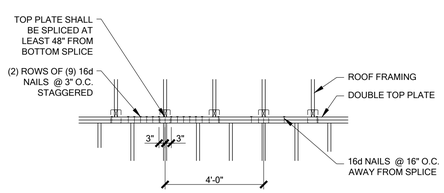

DBL. TOP PLATE SPLICE CONN.
SCALE: NTS

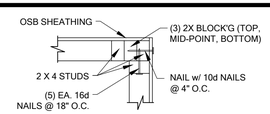

TOP CORNER DETAIL
SCALE: NTS

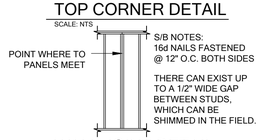

S/B NOTES:
16d NAILS FASTENED @ 12" O.C. BOTH SIDES

THERE CAN EXIST UP TO A 1/2" WIDE GAP BETWEEN STUDS, WHICH CAN BE SHIMMED IN THE FIELD.

WALL JOINT DETAIL
SCALE: NTS

N WALL DETAILS
SCALE: N.T.S.

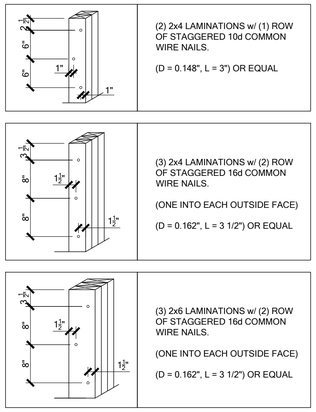

NOTES:
1 - ADJACENT NAILS ARE DRIVEN FROM OPPOSITE SIDE OF COLUMN.
2 - ALL NAILS PENETRATE AT LEAST 3/4" OF THE THICKNESS OF THE LAST LAMINATION.
3 - FOR 4-PLY, PROVIDE 1/4" DIA. X 5 1/2" LAG SCREWS OR EQUAL. (SPACE AS SHOWN FOR 3-PLY)
4 - REFER TO NDS SECTION 15.3 FOR ADDITIONAL INFORMATION.

K STD. NAILING FOR BUILT-UP COLUMNS

FOR COUNTY USE ONLY

01/20/2025

To the best of the Engineer's knowledge, information and belief, the structural plans and specifications contained within these drawings comply with the Florida Building Code 6th Edition (2023) Residential. Engineer's signature and seal is only for the structural engineering portions of the drawing pages bearing Engineer's signature and seal.

CA No. 9161 AA26003115

TSG Making Dreams Come True
TOTAL SOLUTIONS GROUP
258 Southhall Lane, Suite 200
Maitland, Florida, 32751
(407) 880 2333
100% Employee Owned
myTSGhome.com

MARONDA Homes
3969 West First Street
Sanford, FL 32771
(407)302-9871

Community: Forest Cove
Plan Name: Livorno
Elev - J
Garage Side: Left
Lot: 6
Block:
Address: TBD SW Cadence Glen Lake City, FL 32024
Job no. 9FC00601
Renaissance Series
Reference No. 25-00449
Sheet: WS-S2
DETAILS

CARLOS.DAVILA 1/17/2025

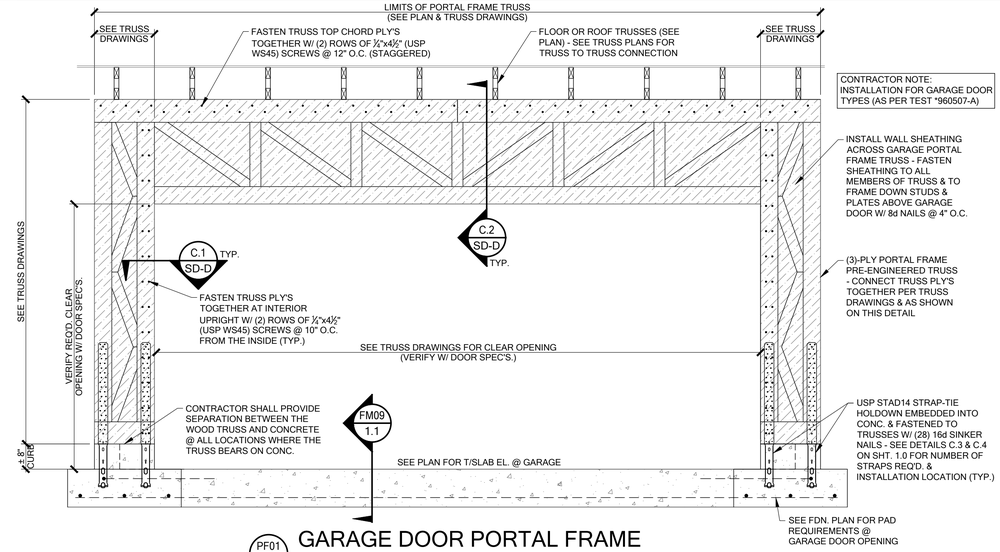

PF01 GARAGE DOOR PORTAL FRAME
SCALE: N.T.S.

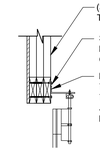

C.1 GARAGE DOOR JAMB DETAIL
SCALE: NTS

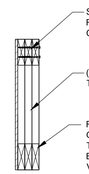

C.2 GARAGE DOOR HEAD DETAIL
SCALE: N.T.S.

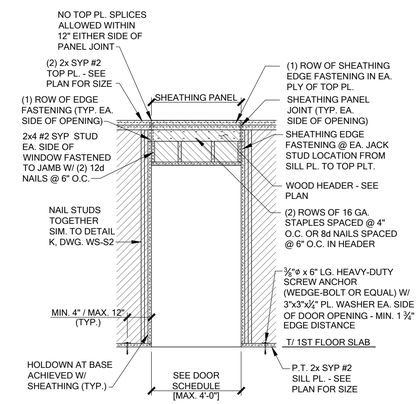

J TYP. EXT. MAN DOOR HEADER DETAIL - 1ST FLOOR FRAMING
SCALE: N.T.S.
MAXIMUM DOOR OPENING = 6'-4"

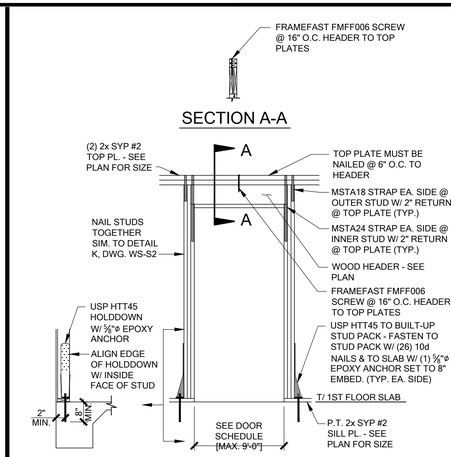

JJ EXT. MAN DOOR HEADER W/ JAMB HOLDOWN - 1ST FLOOR FRAMING
SCALE: N.T.S.
MAXIMUM DOOR OPENING = 6'-4"

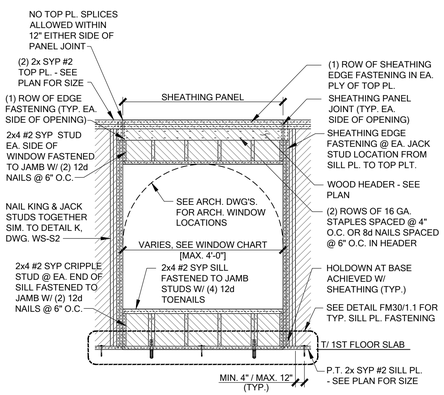

K TYP. EXT. WINDOW HEADER DETAIL - 1ST FLOOR FRAMING
SCALE: N.T.S.

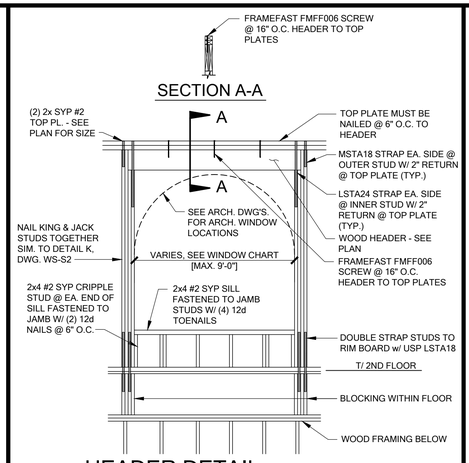

L HEADER DETAIL- 2ND FLOOR FRAMING
SCALE: N.T.S.

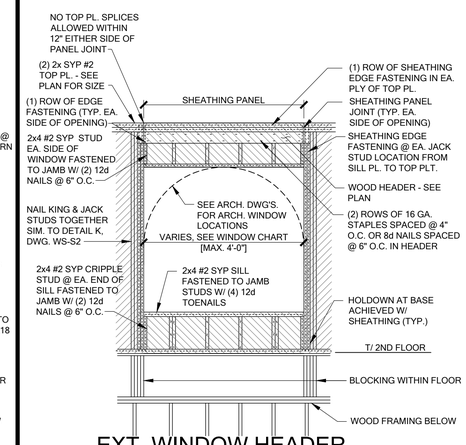

M EXT. WINDOW HEADER DETAIL - 2ND FLOOR FRAMING
4'-0" OR SMALLER
SCALE: N.T.S.

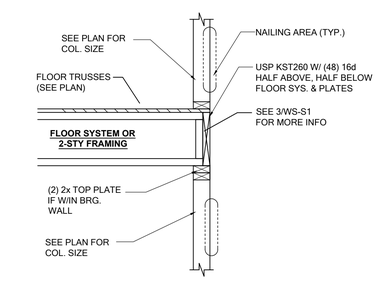

SG07 2-STORY COLUMN W/ CANT.
SCALE: N.T.S.

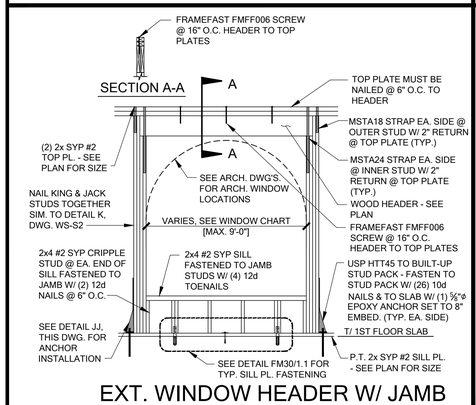

KK EXT. WINDOW HEADER W/ JAMB HOLDOWN - 1ST FLOOR FRAMING
SCALE: N.T.S.

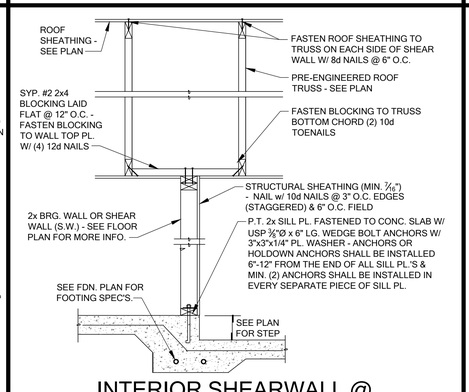

SW04 INTERIOR SHEARWALL @ STEP-DOWN (1-STORY)
SCALE: N.T.S.

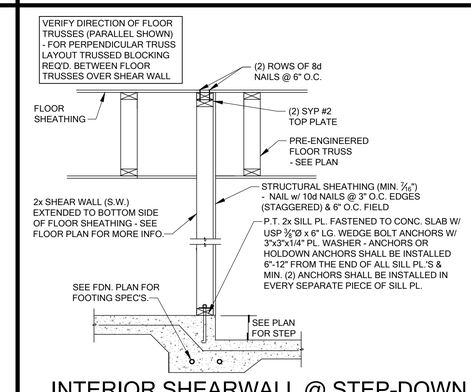

SW04A INTERIOR SHEARWALL @ STEP-DOWN (2-STORY PARALLEL TRUSSES)
SCALE: N.T.S.

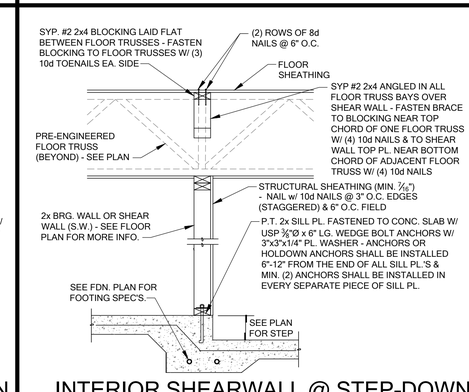

SW04B INTERIOR SHEARWALL @ STEP-DOWN (2-STORY PERPENDICULAR TRUSSES)
SCALE: N.T.S.

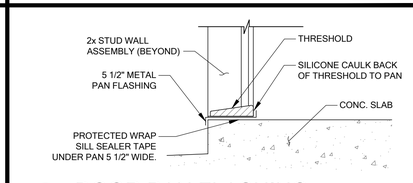

B DOOR PAN FLASHING
SCALE: N.T.S.

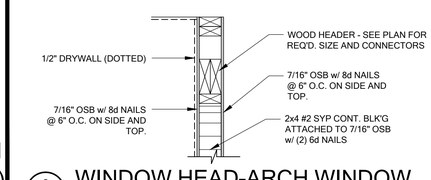

C WINDOW HEAD-ARCH WINDOW
SCALE: N.T.S.

FOR COUNTY USE ONLY

01/20/2025

To the best of the Engineer's knowledge, information and belief, the structural plans and specifications contained within these drawings comply with the Florida Building Code 8th Edition (2023) Residential. Engineer's signature and seal is only for the structural engineering portions of the drawing pages bearing Engineer's signature and seal.

CA No. 9161 AA26003115

TSG Making Dreams Come True
TOTAL SOLUTIONS GROUP
258 Southhall Lane, Suite 200
Maitland, Florida, 32751
(407) 880 2333
100% Employee Owned
myTSGhome.com

MARONDA Homes
3690 West First Street
Sanford, FL 32771
(407)302-9871

Community: Forest Cove	Garage Side: Left
Plan Name: Livorno	Elev - J
Lot: 6	Block:
Address: TBD SW Cadence Glen Lake City, FL 32024	Renaissance Series
Job no. 9FC00601	
Reference No. 25-00449	
Sheet: SD-1	
DETAILS	

CARLOS.DAVILA 1/17/2025

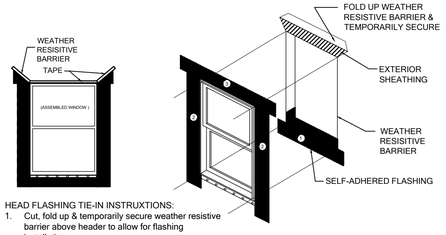

HEAD FLASHING TIE-IN INSTRUXTIONS:

1. Cut, fold up & temporarily secure weather resistive barrier above header to allow for flashing installation
2. Self-adhered flashing plus head flashing under weather resistive barrier
3. Fold weather resistive barrier back over head flashing and seal with tape

1 2

Scale: NTS

SELF-ADHERED FLASHING
FLANGED WINDOW
FLASHING INSTALLATION AFTER WEATHER RESISTIVE BARRIER

WP01

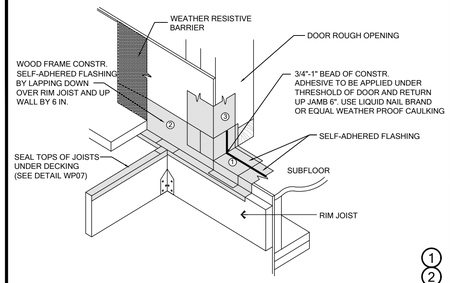

1 2

SELF-ADHERED FLASHING
EXTERIOR DOOR WITH DECK - SECTION A

WP02

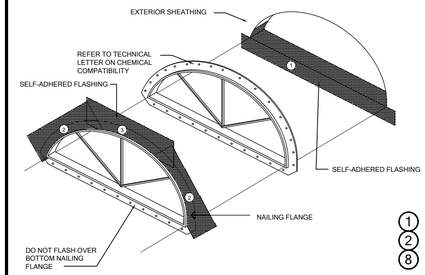

1 2 8

SELF-ADHERED FLASHING
HALF ROUND WINDOW

WP03

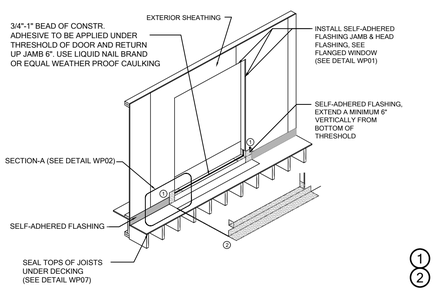

1 2

SELF-ADHERED FLASHING
EXTERIOR DOOR WITH DECK

WP04

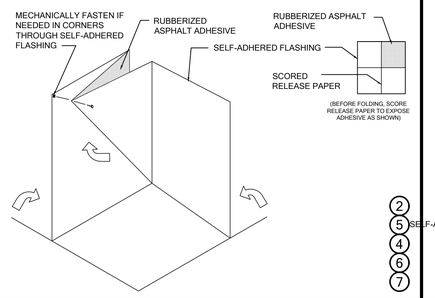

2 5 4 6 7

SELF-ADHERED FLASHING
INSIDE CORNER

WP05

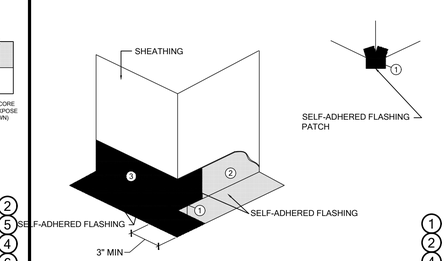

1 2 4 5

SELF-ADHERED FLASHING
OUTSIDE CORNER

WP06

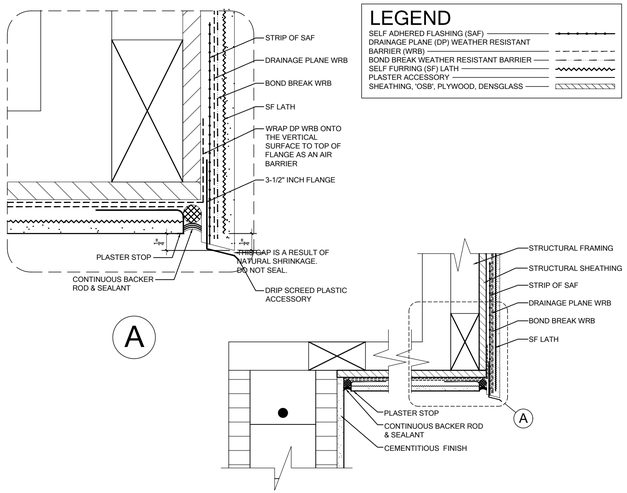

SOFFIT/CANTILEVER

WP07

SELF-ADHERED FLASHING PRODUCTS DETAILS

WATER RESISTIVE BARRIERS ARE REQUIRED BEHIND STUCCO. AS PER FBC-R (CURRENT EDITION)

Detail Instructions
Refer to the number marked as (#) in each detail that corresponds to the numbered items in the list of instructions below:

1. Install self-adhered flashing in order as shown by numbers
2. Install flashing and weather resistive barrier to form water shedding laps
3. Self-adhered flashing can be substituted for building paper
4. Split the release paper using the ripcord (Split release on demand, embedded in the adhesive layer) - for ease of installation and to minimize scoring cuts
5. Remove all release paper per standard installation instructions and adhere to substrate using a square piece of flashing material (6" x 6" Minimum)
6. Fold as shown by arrows
7. Angle of corner may vary, adjust folding of the flashing accordingly to fit tight to corner
8. Mechanically fasten as necessary

FLASHING REQUIREMENTS

R703.1 General. Exterior walls shall provide the building with a weather-resistant exterior wall envelope. The exterior wall envelope shall include flashing as described in Section R703.4.

R703.1.1 Water resistance. The exterior wall envelope shall be designed and constructed in a manner that prevents the accumulation of water within the wall assembly by providing a water-resistant barrier behind the exterior cladding as required by Section R703.2 and a means of draining to the exterior water that penetrates the exterior cladding.

R703.2 Water-resistive barrier. Not fewer than one layer of water-resistive barrier shall be applied over studs or sheathing of all exterior walls with flashing as indicated in Section R703.4, in such a manner as to provide a continuous water-resistive barrier behind the exterior wall veneer. The water-resistive barrier material shall be continuous to the top of walls and terminated at penetrations and building appendages in a manner to meet the requirements of the exterior wall envelope as described in Section R703.1. Water-resistive barrier materials shall comply with one of the following:

1. No. 15 felt complying with ASTM D226, Type 1.
2. ASTM E2568, Type 1 or 2.
3. ASTM E331 in accordance with Section R703.11.
4. Other approved materials in accordance with the manufacturer's installation instructions.

No. 15 asphalt felt and water-resistive barriers complying with ASTM E2556 shall be applied horizontally, with the upper layer lapped over the lower layer not less than 2 inches (51 mm), and where joints occur, shall be lapped not less than 6 inches (152 mm).

R703.7.3 Water-resistive barriers Water-resistive barriers shall be installed as required in Section R703.2 and, where applied over wood-based sheathing, shall include a water-resistive vapor-permeable barrier with a performance at least equivalent to two layers of Grade D paper. The individual layers shall be installed independently such that each layer provides a separate continuous plane and any flashing (installed in accordance with Section R703.4) intended to drain to the water-resistive barrier is directed between the layers.
Exception: Where the water-resistive barrier that is applied over wood-based sheathing has a water resistance equal to or greater than that of 60-minute Grade D paper and is separated from the stucco by an intervening, substantially nonwater-absorbing layer or designed drainage space.

R703.4 Flashing. Approved metal flashing, vinyl flashing, self-adhered membranes and mechanically attached flexible flashing shall be applied shingle-fashion or in accordance with the manufacturer's instructions. Metal flashing shall be corrosion resistant. Fluid-applied membranes used as flashing shall be applied in accordance with the manufacturer's instructions. All flashing shall be applied in a manner to prevent the entry of water into the wall cavity or penetration of water to the building structural framing components.
Self-adhered membranes used as flashing shall comply with AAMA 711. All exterior fenestration products shall be sealed at the juncture with the building wall with a sealant complying with AAMA 800 or ASTM C920 Class 25 Grade NS or greater for proper joint expansion and contraction, ASTMC1281, AAMA 812, or other approved standard as appropriate for the type of sealant. Fluid-applied membranes used as flashing in exterior walls shall comply with AAMA 714. The flashing shall extend to the surface of the exterior wall finish. Approved flashings shall be installed at the following locations:

1. Exterior window and door openings. Flashing at exterior window and door openings shall extend to the surface of the exterior wall finish or to the water-resistive barrier complying with Section 703.2 for subsequent drainage. Mechanically attached flexible flashings shall comply with AAMA 712. Flashing at exterior window and door openings shall be installed in accordance with one or more of the following:
   1.1 The fenestration manufacturer's installation and flashing instructions, or for applications not addressed in the fenestration manufacturer's instructions, in accordance with the flashing or water-resistive barrier manufacturer's instructions. Where flashing instructions or details are not provided, pan flashing shall be installed at the sill of exterior window and door openings. Pan flashing shall be sealed or sloped in such a manner as to direct water to the surface of the exterior wall finish or to the water resistive barrier for subsequent drainage. Openings using pan flashing shall incorporate flashing or protection at the head and sides.
   1.2 In accordance with the flashing design or method of a registered design professional.
   1.3 In accordance with other approved methods.
   1.4 In accordance with FMA/AAMA 100, FMA/ AAMA 200, FMA/WDMA 250, FMA/AAMA/ WDMA 300, FMA/AAMA/WDMA 400 or FMA/AAMA/WDMA 2710.
2. At the intersection of chimneys or other masonry construction with frame or stucco walls, with projecting lips on both sides under stucco copings.
3. Under and at the ends of masonry, wood or metal copings and sills.
4. Continuously above all projecting wood trim.
5. Where exterior porches, decks or stairs attach to a wall or floor assembly of wood-frame construction.
6. At wall and roof intersections.
7. At built-in gutters.

THESE DETAILS ARE GENERIC AND MEANT TO SHOW GENERAL FLASHING AND WATERPROOFING METHODS TO BE USED.

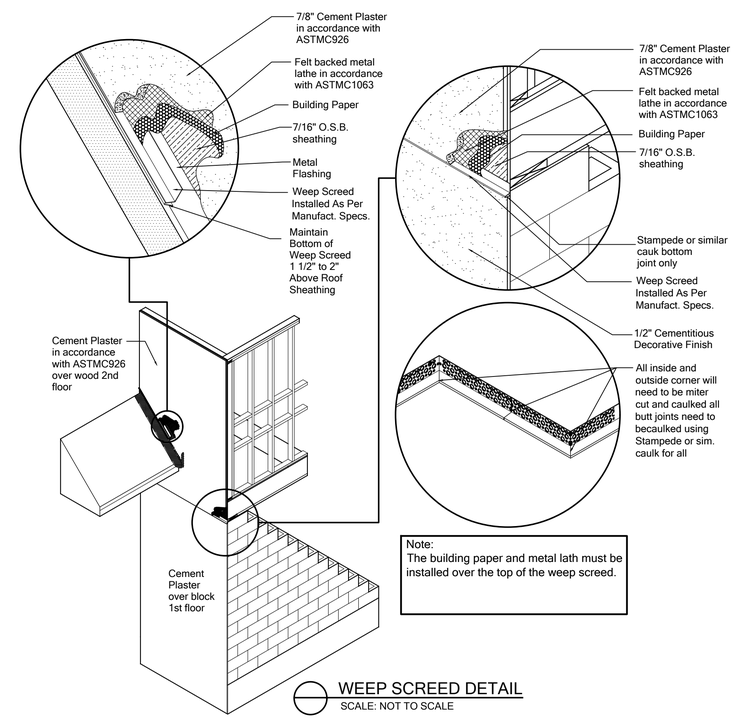

Note:
The building paper and metal lath must be installed over the top of the weep screed.

WEEP SCREED DETAIL
SCALE: NOT TO SCALE

FOR COUNTY USE ONLY

01/20/2025

To the best of the Engineer's knowledge, information and belief, the structural plans and specifications contained within these drawings comply with the Florida Building Code 8th Edition (2023) Residential. Engineer's signature and seal is only for the structural engineering portions of the drawing pages bearing Engineer's signature and seal.

CA No. 9161 AA26003115

TSG Making Dreams Come True
TOTAL SOLUTIONS GROUP
258 Southhall Lane, Suite 200
Maitland, Florida, 32751
(407) 880 2333
100% Employee Owned
myTSGhome.com

MARONDA Homes
3969 West First Street
Sanford, FL 32771
(407)302-9871

Community: Forest Cove
Plan Name: Livorno
Elev - J
Garage Side: Left
Lot: 6
Block:
Address: TBD SW Cadence Glen Lake City, FL 32024
Job no. 9FC00601
Renaissance Series
Reference No. 25-00449
Sheet: WP
WATERPROOFING

1/17/2025
CARLOS.DAVILA

ZIP SYSTEM® SHEATHING WALL AT TYPICAL ELECTRICAL PENETRATION — P-3

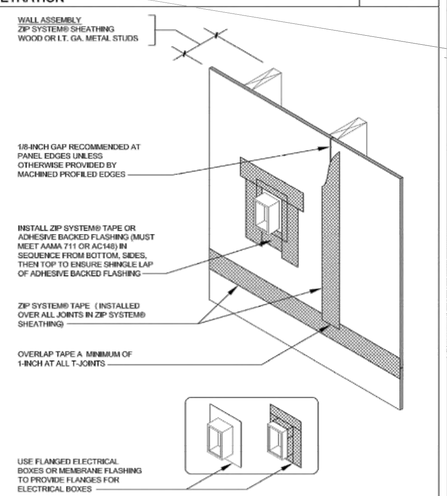

DRAWING NOT TO SCALE

ZIPsystem™ SHEATHING & TAPE | Sales Office: 10925 David Taylor Drive, Suite 300 - Charlotte, NC 28262, Telephone: 800.933.9220 - www.zipsystem.com | another innovation from HUBER ENGINEERED WOODS

These construction details are provided to assist in the installation of ZIP System® product(s) and may not apply to every situation. Manufacturer accepts no responsibility or liability for the use of these or other construction details.

ZIP SYSTEM® SHEATHING-WALL AT TYPICAL EXTERIOR CORNER — P-2

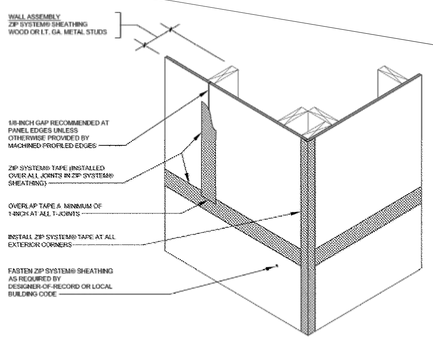

DRAWING NOT TO SCALE

ZIPsystem™ SHEATHING & TAPE | Sales Office: 10925 David Taylor Drive, Suite 300 - Charlotte, NC 28262, Telephone: 800.933.9220 - www.zipsystem.com | another innovation from HUBER ENGINEERED WOODS

These construction details are provided to assist in the installation of ZIP System® product(s) and may not apply to every situation. Manufacturer accepts no responsibility or liability for the use of these or other construction details.

ZIP SYSTEM® SHEATHING AT TYPICAL INTERIOR CORNER — P-1

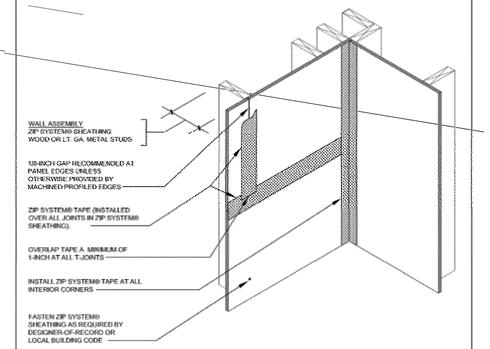

DRAWING NOT TO SCALE

ZIPsystem™ SHEATHING & TAPE | Sales Office: 10925 David Taylor Drive, Suite 300 - Charlotte, NC 28262, Telephone: 800.933.9220 - www.zipsystem.com | another innovation from HUBER ENGINEERED WOODS

These construction details are provided to assist in the installation of ZIP System® product(s) and may not apply to every situation. Manufacturer accepts no responsibility or liability for the use of these or other construction details.

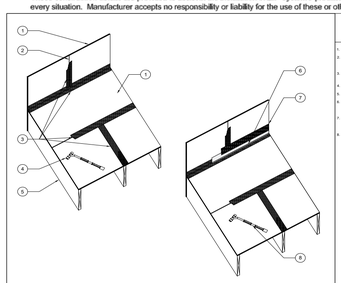

1. ZIP SYSTEM® SHEATHING.
2. 1/8-INCH GAP RECOMMENDED AT ALL PANEL EDGES UNLESS OTHERWISE PROVIDED BY TONGUE AND TONGUE (T&T) OR TONGUE AND GROOVE (T&G) PROFILE.
3. TAPE ALL PANEL SEAMS WITH ZIP SYSTEM™ FLASHING TAPE BEFORE INSTALLING DRIP EDGE.
4. ZIP SYSTEM® ROLLER. ROLL ALL TAPE.
5. FRAMING (BY OTHERS).
6. DRIP EDGE INSTALLED PER CODE OR BY DESIGNER OF RECORD INSTALLED OVER ROOF COVERING AS REQUIRED BY THE FINISHED ROOFING MANUFACTURER.
7. TAPE THE TOP EDGE OF DRIP EDGE FLASHING WITH ZIP SYSTEM™ TAPE OR ADHESIVE BACKED FLASHING MEETING AAMA 711 OR AC148.
8. ZIP SYSTEM® ROLLER. ROLL ALL TAPE.

ZIP SYSTEM® ROOF SHEATHING TO ZIP SYSTEM® WALL SHEATHING — TD-2.1

Questions? Call us at 800.933.9220 ext. 2716 or visit our website at zipsystem.com

ZIPsystem™ SHEATHING & TAPE

Technical Tip

Overdriven Fasteners in ZIP System® Sheathing

Nails used to attach ZIP System sheathing to supporting framing members may occasionally penetrate beyond the face of the ZIP System panels. An ideal installation would be where fastener heads are flush with the panel surface. For this correspondence, "Overdriven Fasteners," are defined as nails that are installed through the panel and into a framing member, like a wall stud or rafter, with the fastener head penetrating into the integrated moisture barrier.

For roof applications, ZIP System sheathing is code recognized in ICC-ES ESR-1473 as a combination roof sheathing and roof underlayment. When used on a wall, ZIP System sheathing is code-recognized in ICC-ES ESR-1474 as a combination wall sheathing, air barrier and water-resistive barrier. Both International and Residential Building codes have specific requirements on fastener types, size and spacing when attaching wood structural panels as roof or wall sheathing. Minimum required fastening and allowable shear values required by code are based on the assumption that fasteners are installed flush with the sheathing surface. Due to variations in materials and limitations on equipment, this may be difficult to achieve in some situations. According to the TECO Tech Tip, *Reduction in Shear Capacity Due to Overdriven Fasteners*, shear capacity could be reduced up to 25% depending on the depth and amount of fasteners that are overdriven. Please refer to technical bulletins published by APA and TECO at www.apawood.org and www.tecodesteel.com for more information about reduced shear capacity due to overdriven fasteners. Consult your local building official or design professional for any additional nailing that may be required due to overdriven fasteners.

ZIP System Sheathing has been tested against water penetration in both laboratory and field conditions using standard ASTM tests at specified pressures. Panels were tested with overdriven fasteners at various depths and then compared with panels that were tested with fastener heads flush. The panels with overdriven fasteners satisfied the same performance requirements as panels installed with fastener heads flush. Huber Engineered Woods does not require taping or sealing overdriven fasteners. ZIP System panels that are attached with overdriven fasteners will not void the ZIP System warranty.

Although overdriven fasteners do not affect ZIP System sheathing's ability to resist moisture, it may reduce the shear capacity of the fastener. Overdriven fasteners can reduce the amount of wind or earthquake loading a shear wall is designed to resist. This possible reduction in shear capacity is inherent with all diaphragms and shear walls constructed with structural OSB or plywood and is NOT specific to ZIP System products.

Please contact Huber Engineered Woods at 800-933-9220 with any questions or comments.

Huber Engineered Woods, LLC, 10925 David Taylor Drive, Suite 300, Charlotte, NC 28262
Tel: 800-933-9220, www.zipsystem.com

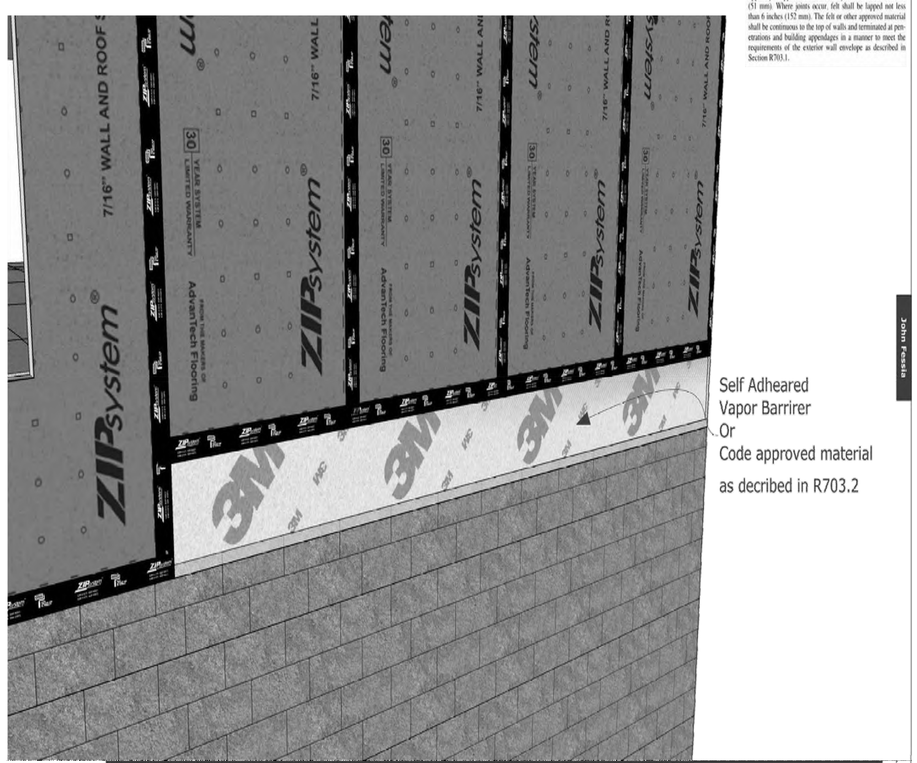

R703.2 Water-resistive barrier. One layer of No. 15 asphalt felt, free from holes and breaks, complying with ASTM D 226 for Type I felt or other approved water-resistive barrier shall be applied over studs or sheathing of all exterior walls. Such felt or material shall be applied horizontally, with the upper layer lapped over the lower layer not less than 2 inches (51 mm). Where joints occur, felt shall be lapped not less than 6 inches (152 mm). The felt or other approved material shall be continuous to the top of walls and terminated at penetrations and building appendages in a manner to meet the requirements of the exterior wall envelope as described in Section R703.1.

John Fessia

May 4, 2017 | Florida | Zip Wall RimProtection | A | 01

HUBER ENGINEERED WOODS

ZIP SYSTEM® ROOF SHEATHING CONTRACTOR CHECKLIST

General Contractor/Installer | Project Name | Project Location

Observer's Name | Jobsite Superintendent | Date of Observation

ZIP SYSTEM® ROOF SHEATHING CONTRACTOR CHECKLIST:

#	Item	YES	NO	N/A	Other*
ZIP System® roof sheathing and tape					
1	ZIP System™ tape roller or tape gun used at areas observed	☐	☐	☐	☐
2	ZIP System™ tape appears to extend a minimum of 1" at T-joint intersections (shingle style)	☐	☐	☐	☐
3	ZIP System™ tape appears to be lapped min 3" at horizontal seams	☐	☐	☐	☐
4	ZIP System™ tape appears firmly pressed onto panel surface	☐	☐	☐	☐
5	Shiners (fasteners that missed rafters/blocking) were identified and removed (if possible) and taped over	☐	☐	☐	☐
6	Proper H-clips are being used (if required)	☐	☐	☐	☐
7	Spacing between panels minimum of 1/8", maximum of ½"	☐	☐	☐	☐
8	Flush nailer attachment used to prevent over-driven fasteners, not required (best practice)	☐	☐	☐	☐
9	Code approved fasteners and proper spacing of fasteners meet project specifications	☐	☐	☐	☐
10	Long edge (8' side) of ZIP System® roof panel oriented perpendicular to the framing members	☐	☐	☐	☐
11	Short edge (4' side) of ZIP System® roof panels staggered: min 24"	☐	☐	☐	☐
12	ZIP System® roof panels span a minimum three framing members	☐	☐	☐	☐
13	Framing members support the entire edge of the panels	☐	☐	☐	☐
Mechanical and Electrical Penetrations (MEP's)					
14	MEP's flashed	☐	☐	☐	☐
15	ZIP System™ tape used to flash MEP's	☐	☐	☐	☐
16	Proper sequence of flashing (i.e., shingle style)	☐	☐	☐	☐
Transitions					
17	Ridge tape cut prior to the installation of ridge vents	☐	☐	☐	☐
18	ZIP System™ tape over the top of transitional step flashing at wall to roof locations	☐	☐	☐	☐
19	Ice and water barriers are installed where required by local code	☐	☐	☐	☐
20	Minimum 1 layer 6" ZIP System™ tape or 2 layers 3.75" ZIP System™ tape with 1" overlap for valley flashing	☐	☐	☐	☐
21	ZIP System™ tape over the top of transitional flashings (i.e., drip edge)	☐	☐	☐	☐
22	ZIP System® panels and tape installed on the front and back of parapets (dried in)	☐	☐	☐	☐
Safety & Repairs					
23	Holes from toe boards have been taped and rolled with ZIP System™ tape or ZIP System™ liquid flash	☐	☐	☐	☐
24	All ZIP System Sheathing® roofing panels seam are taped prior to any flashing or roofing membrane installation	☐	☐	☐	☐
25	Contractor checklist objectives to be completed in accordance with contract safety protocols	☐	☐	☐	☐

Additional Notes:

This observation report is being provided at your request and for your benefit and at no cost to you. This report is intended to be used only by you and is intended for general information purposes only; it is not a substitute for specific professional advice. In preparing this report, Huber Engineered Woods LLC (HEW) used reasonable efforts to provide information relating to the installation of ZIP System® products at the project site identified above. HEW DOES NOT WARRANT OR GUARANTEE THE ACCURACY, COMPLETENESS, OR ADEQUACY OF THE INFORMATION CONTAINED IN THE REPORT REGARDING YOUR PROJECT, AND HEW HEREBY SPECIFICALLY DISCLAIMS ANY LIABILITY FOR THE CONTENT OF THIS OBSERVATION REPORT AND FOR THE CONSEQUENCES OF ANY ACTIONS TAKEN ON THE BASIS OF THE INFORMATION PROVIDED. The observation was done and the report created during the construction process and as such, not all aspects of the installation may have been accessible, viewable or complete. Work executed after the completion of these forms may affect the installation as observed. Any reference to or mentioning of any other commercial product, process, or service (or provider of such product, process or service) by trade name, trademark, hyperlink, or otherwise, does not constitute or imply an endorsement or recommendation by Huber Engineered Woods LLC and is for informational purposes only. © 2018 Huber Engineered Woods LLC. ZIP System, and the accompanying design are trademarks of Huber Engineered Woods LLC. Huber is a trademark of J.M. Huber Corporation. Huber Engineered Woods products are covered by various patents. See ZIPSystem.com for details. HUB B1839-SP REV 10/18

***If checked other, please explain in additional notes. List the number of the item you are providing an explanation for.**

HUBER ENGINEERED WOODS

LISTA DE CONTROL DE REVESTIMIENTO DE TECHO ZIP SYSTEM® PARA CONTRATISTAS

Contratista general/instalador | Nombre del proyecto | Ubicación del proyecto

Nombre del observador | Superintendente de obra | Fecha de la observación

LISTA DE CONTROL DE REVESTIMIENTO DE TECHO ZIP SYSTEM® PARA CONTRATISTAS

#	Ítem	SÍ	NO	N/C	Otros*
Revestimiento de techo y cinta ZIP System®					
1	Se utilizó un rodillo o pistola dispensadora de cinta adhesiva ZIP System™ en las áreas observadas	☐	☐	☐	☐
2	La cinta adhesiva ZIP System™ parece prolongarse como mínimo 1" en las intersecciones de las juntas en T (estilo tejas)	☐	☐	☐	☐
3	La cinta adhesiva ZIP System™ parece estar superpuesta 3" como mínimo en las uniones horizontales	☐	☐	☐	☐
4	La cinta adhesiva ZIP System™ ha sido presionada con firmeza sobre la superficie del panel	☐	☐	☐	☐
5	En la medida de lo posible, se identificó y retiró todo sujetador mal colocado (fuera de viguetas/bloqueados) y se aplicó cinta sobre el área	☐	☐	☐	☐
6	Se utilizan sujetadores de tipo H apropiados (si fuese necesario)	☐	☐	☐	☐
7	Hay un espaciado mínimo de 1/8" y máximo de ½" entre paneles	☐	☐	☐	☐
8	Se utiliza un accesorio para clavar a ras de modo de evitar ajustar en exceso los sujetadores (si bien no es requisito, se considera una práctica óptima)	☐	☐	☐	☐
9	El uso de sujetadores aprobados y un correcto espaciado de los sujetadores permite cumplir con las certificaciones del proyecto	☐	☐	☐	☐
10	El borde largo (lateral de 8') del panel de techo ZIP System® está orientado en forma perpendicular a los bastidores	☐	☐	☐	☐
11	El borde corto (lateral de 4') de los paneles de techo ZIP System® está escalonado como mínimo 24"	☐	☐	☐	☐
12	Los paneles de techo ZIP System® abarcan al menos tres bastidores	☐	☐	☐	☐
13	Los bastidores sostienen el borde completo de los paneles	☐	☐	☐	☐
Instalaciones mecánicas y eléctricas					
14	Instalaciones mecánicas y eléctricas recubiertas	☐	☐	☐	☐
15	Se utilizó cinta adhesiva ZIP System™ para recubrir instalaciones mecánicas y eléctricas	☐	☐	☐	☐
16	Secuencia adecuada del recubrimiento (por ejemplo, estilo tejas)	☐	☐	☐	☐
Transiciones					
17	Corte de cinta en aristas antes de la instalación de cumbreras con ventilación	☐	☐	☐	☐
18	Cinta ZIP System™ sobre el recubrimiento de transición en zonas de unión de pared a techo	☐	☐	☐	☐
19	Instalación de protecciones contra hielo y agua de conformidad con el código local	☐	☐	☐	☐
20	Como mínimo, 1 capa de cinta adhesiva ZIP System™ de 6" o 2 capas de 3.75" con 1" de superposición para recubrimiento de limahoya	☐	☐	☐	☐
21	Cinta ZIP System™ sobre la parte superior de recubrimientos de transición (por ejemplo, borde de goteo)	☐	☐	☐	☐
22	Instalación de paneles y cinta adhesiva ZIP System® en la parte frontal y posterior de parapetos (seco)	☐	☐	☐	☐
Seguridad y reparaciones					
23	Los orificios de los tablones de pie están encintados y cubiertos con cinta adhesiva ZIP System™ o membrana Liquid Flash ZIP System™	☐	☐	☐	☐
24	Se aplicó cinta sobre todas las uniones de los paneles de techo ZIP System Sheathing® antes de cualquier instalación de membrana tapajuntas o de techo	☐	☐	☐	☐
25	Los objetivos de la lista de control del contratista deben ser completados según los protocolos de seguridad del contrato	☐	☐	☐	☐

Notas adicionales:

Se entrega este informe de observación a pedido, para su beneficio y sin costo. Este informe solo debe ser utilizado por usted con fines informativos generales únicamente; no pretende reemplazar el asesoramiento específico de profesionales. En la preparación de este informe, Huber Engineered Woods LLC (HEW) recurrió a medidas razonables para brindar información relacionada con la instalación de productos ZIP System® en el lugar del proyecto que se identifica más arriba. HEW NO GARANTIZA LA EXACTITUD, INTEGRIDAD O ADECUACIÓN DE LA INFORMACIÓN DEL INFORME EN RELACIÓN CON SU PROYECTO Y, POR MEDIO DEL PRESENTE, HEW SE EXIME ESPECÍFICAMENTE DE TODA RESPONSABILIDAD POR EL CONTENIDO DE ESTE INFORME DE OBSERVACIÓN Y POR LAS CONSECUENCIAS DE CUALQUIER ACCIÓN TOMADA SOBRE LA BASE DE LA INFORMACIÓN PROPORCIONADA. La observación se realizó durante el proceso de construcción y, como tal, no todos los aspectos de la instalación pueden estar accesibles, visibles o completos. Los otros ejecutadas con posterioridad a estos formularios pueden afectar a la instalación tal como se la observó. Toda referencia o mención de cualquier otro producto comercial, proceso o servicio (o proveedor de dicho producto, proceso o servicio) por nombre o marca comercial, enlace o de otro modo no representa ni implica el aval o la recomendación por parte de Huber Engineered Woods LLC y es para fines informativos únicamente. © 2018 Huber Engineered Woods LLC. ZIP System y el diseño que lo acompaña son marcas comerciales de Huber Engineered Woods LLC. Huber es una marca de J.M. Huber Corporation. Los productos Huber Engineered Woods están cubiertos por varias patentes. Visite ZIPSystem.com para más detalles. HUB B1839-SP REV 10/18

***Si coloca una marca en la columna Otros, explique en la sección de notas adicionales. Indique el número del ítem sobre el cual incluye una explicación.**

TSG — Making Dreams Come True
TOTAL SOLUTIONS GROUP
258 Southhall Lane, Suite 200
Maitland, Florida, 32751
(407) 880 2333
100% Employee Owned
myTSGhome.com
CA No. 9161 AA26003115

TO THE BEST OF THE ENGINEER'S KNOWLEDGE AND UNDERSTANDING, THE STRUCTURAL PLANS AND SPECIFICATIONS COMPLY WITH THE FLORIDA BUILDING CODE SIGNED AND SEALED FOR THE STRUCTURAL PORTION OF THIS DRAWING.

MARONDA Homes
3993 West First Street | Sanford, FL 32771 | (407) 302-9871

Plan Revisions Date:
1 1-1-'24 2023 8th Edition Code
2
3
4
5
6
7
8
9
10
11
12
13
14

Tech: ERAND

Job Information:
Plan Name: ZIP System Details
Garage Side:
Community:
Job no.
Lot:
Block:
Address:

Reference No.

Sheet: ZS-D

ZIP WALL DETAILS

ZIP System® ZIP SYSTEM® SHEATHING-ROOF W/ SHINGLES W/ CONTINUOUS FLASHING AT WALL **B-13**

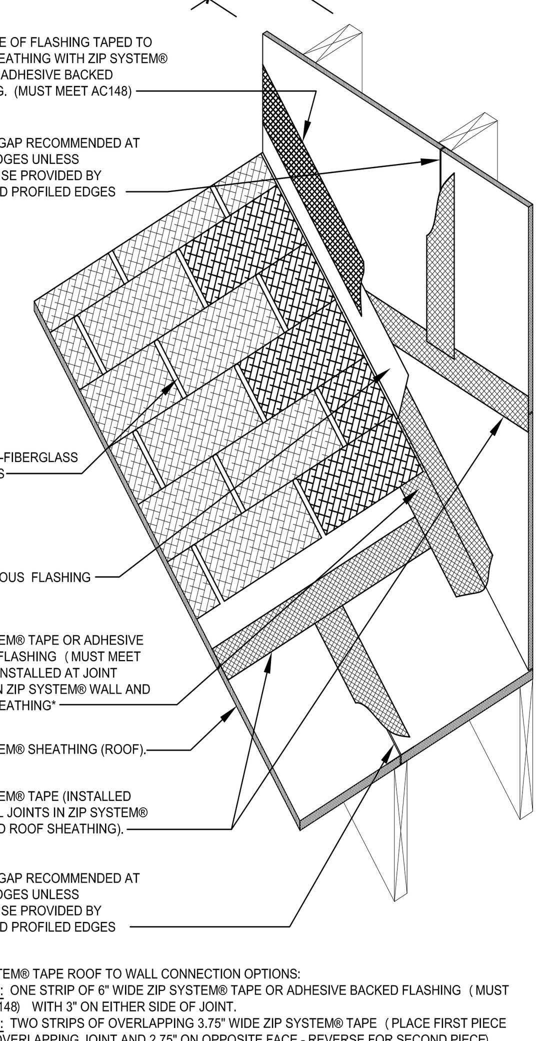

*ZIP SYSTEM® TAPE ROOF TO WALL CONNECTION OPTIONS:
OPTION 1: ONE STRIP OF 6" WIDE ZIP SYSTEM® TAPE OR ADHESIVE BACKED FLASHING (MUST MEET AC148) WITH 3" ON EITHER SIDE OF JOINT.
OPTION 2: TWO STRIPS OF OVERLAPPING 3.75" WIDE ZIP SYSTEM® TAPE (PLACE FIRST PIECE WITH 1" OVERLAPPING JOINT AND 2.75" ON OPPOSITE FACE - REVERSE FOR SECOND PIECE)

DRAWING NOT TO SCALE

03-14-2014

Sales Office: 10925 David Taylor Drive - Suite 300 - Charlotte, NC 28262
Telephone: 800.933.9220 - Facsimile: 704.547.9228 - www.zipsystem.com

another innovation from HUBER ENGINEERED WOODS

These construction details are provided to assist in the installation of ZIP System® product(s) and may not apply to every situation. Manufacturer accepts no responsibility or liability for the use of these or other construction details.

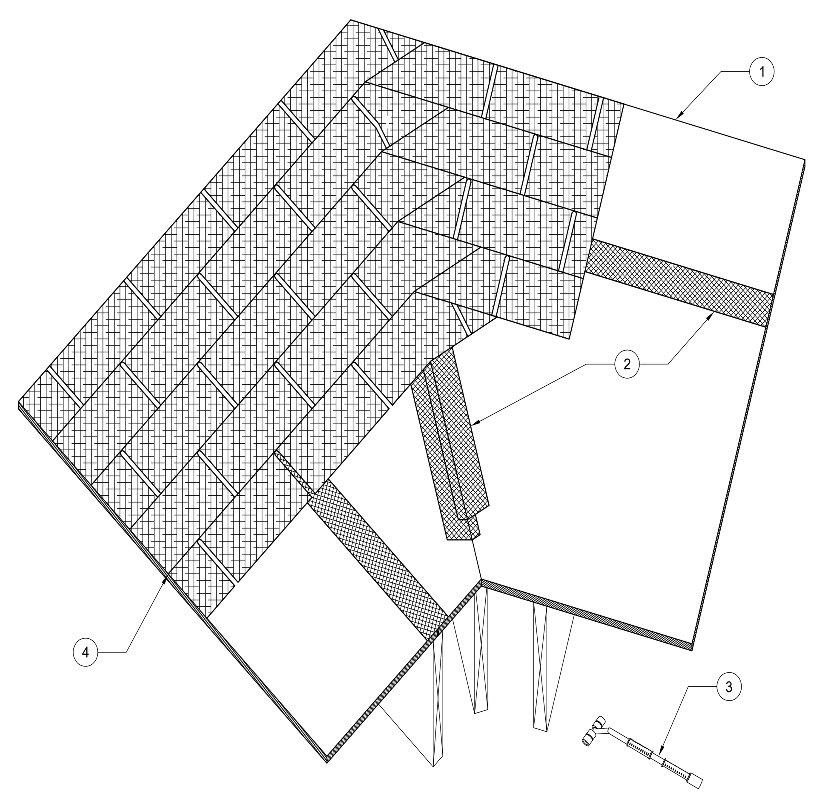

HUBER ENGINEERED WOODS

1. ZIP SYSTEM® SHEATHING*.
2. TAPE ALL PANEL SEAMS WITH ZIP SYSTEM™ FLASHING TAPE BEFORE INSTALLING DRIP EDGE.
3. ZIP SYSTEM ROLLER. ROLL ALL TAPE.
4. FINISHED ROOF COVERING. FOLLOW SIDING MANUFACTURER FOR PROPER INSTALLATION.

*ZIP SYSTEM® TAPE ROOF VALLEY OPTIONS:
OPTION 1: ONE STRIP OF 6" WIDE ZIP SYSTEM® TAPE OR ADHESIVE BACKED FLASHING (MUST MEET AC148) WITH 3" ON EITHER SIDE OF JOINT.
OPTION 2: TWO STRIPS OF OVERLAPPING 3.75" WIDE ZIP SYSTEM® TAPE (PLACE FIRST PIECE WITH 1" OVERLAPPING JOINT AND 2.75" ON OPPOSITE FACE - REVERSE FOR SECOND PIECE

NTS

03-04-2020 | ZIP SYSTEM® SHEATHING TAPED VALLEY FLASHING | TD-6.3 | Questions? Call us at 800.933.9220 ext. 2716 or visit our website at zipsystem.com | ZIP System® SHEATHING & TAPE

These construction details are provided to assist in the installation of ZIP System® product(s) and may not apply to every situation. Manufacturer accepts no responsibility or liability for the use of these or other construction details.

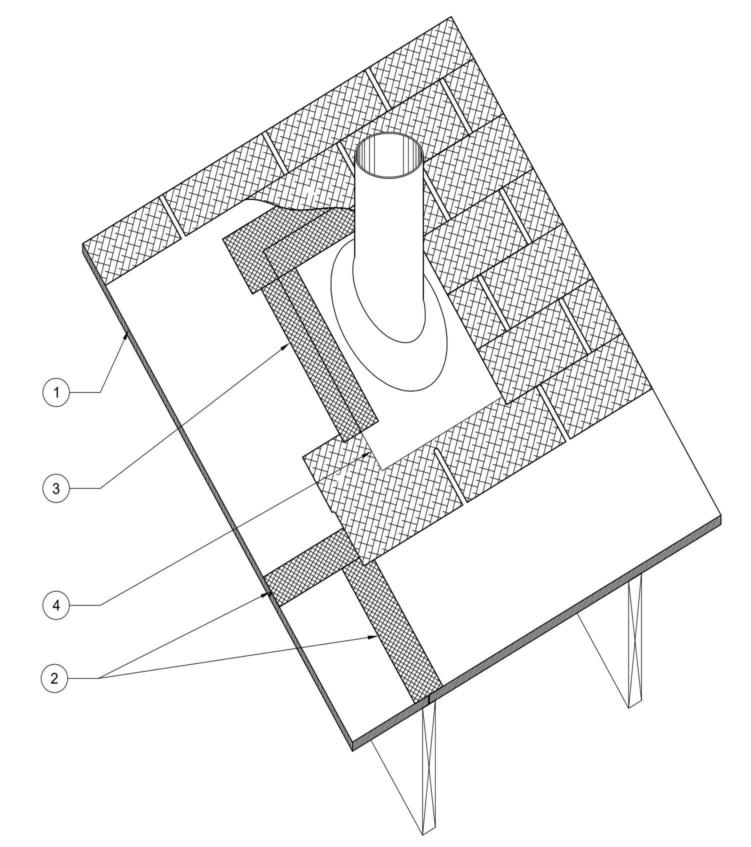

HUBER ENGINEERED WOODS

1. ZIP SYSTEM® SHEATHING.
2. TAPE ALL PANEL SEAMS WITH ZIP SYSTEM™ FLASHING TAPE BEFORE INSTALLING DRIP EDGE.
3. SEAL PREFORMED METAL ROOF VENT.
4. LAP PREFORMED METAL ROOF VENT OVER ROOF COVERING PER MANUFACTURER'S INSTALLATION RECOMMENDATIONS.

NTS

03-04-2020 | ZIP SYSTEM® SHEATHING AT PLUMBING VENT | TD-8.1 | Questions? Call us at 800.933.9220 ext. 2716 or visit our website at zipsystem.com | ZIP System® SHEATHING & TAPE

These construction details are provided to assist in the installation of ZIP System® product(s) and may not apply to every situation. Manufacturer accepts no responsibility or liability for the use of these or other construction details.

HUBER ENGINEERED WOODS

Technical Tip

Overdriven Fasteners in ZIP System® Sheathing

Nails used to attach ZIP System sheathing to supporting framing members may occasionally penetrate beyond the face of the ZIP System panels. An ideal installation would be where fastener heads are flush with the panel surface. For this correspondence, "Overdriven Fasteners," are defined as nails that are installed through the panel and into a framing member, like a wall stud or rafter, with the fastener head penetrating into the integrated moisture barrier.

For roof applications, ZIP System sheathing is code recognized in ICC-ES ESR-1473 as a combination roof sheathing and roof underlayment. When used on a wall, ZIP System sheathing is code recognized in ICC-ES ESR-1474 as a combination wall sheathing, air barrier and water-resistive barrier. Both International and Residential Building codes have specific requirements on fastener types, size and spacing when attaching wood structural panels as roof or wall sheathing. Minimum required fastening and allowable shear values required by code are based on the assumption that fasteners are installed flush with the sheathing surface. Due to variations in materials and limitations on equipment, this may be difficult to achieve in some situations. According to the TECO Tech Tip, *Reduction in Shear Capacity Due to Overdriven Fasteners*, shear capacity could be reduced up to 25% depending on the depth and amount of fasteners that are overdriven. Please refer to technical bulletins published by APA and TECO at www.apawood.org and www.tecotested.com for more information about reduced shear capacity due to overdriven fasteners. Consult your local building official or design professional for any additional nailing that may be required due to overdriven fasteners.

ZIP System Sheathing has been tested against water penetration in both laboratory and field conditions using standard ASTM tests at specified pressures. Panels were tested with overdriven fasteners at various depths and then compared with panels that were tested with fastener heads flush. The panels with overdriven fasteners satisfied the same performance requirements as panels installed with fastener heads flush. Huber Engineered Woods does not require taping or sealing overdriven fasteners. ZIP System panels that are attached with overdriven fasteners will not void the ZIP System warranty.

Although overdriven fasteners do not affect ZIP System sheathing's ability to resist moisture, it may reduce the shear capacity of the fastener. Overdriven fasteners can reduce the amount of wind or earthquake loading a shear wall is designed to resist. This possible reduction in shear capacity is inherent with all diaphragms and shear walls constructed with structural OSB or plywood and is NOT specific to ZIP System products.

Please contact Huber Engineered Woods at 800-933-9220 with any questions or comments.

Huber Engineered Woods, LLC, 10925 David Taylor Drive, Suite 300, Charlotte, NC 28262
Tel: 800-933-9220, www.zipsystem.com

UES® **EVALUATION REPORT** Number: 544

Originally Issued: 10/20/2017 Revised: 05/14/2024 Valid Through: 10/31/2024

HUBER ENGINEERED WOODS, LLC
10925 David Taylor Drive, Suite 300
Charlotte, NC 28262
800-933-9220
www.huberwood.com

ZIP SYSTEM® WALL SHEATHING

CSI Sections:
06 16 00 Sheathing
07 25 00 Water Resistive Barriers/Weather Barriers
07 27 00 Air Barriers

1.0 RECOGNITION

Huber Engineered Woods ZIP System® Wall Sheathing recognized in this report has been evaluated for use as a Water Resistive Barrier and Air Barrier. The water resistance and air resistance properties of the ZIP System® Wall Sheathing complies with the intent of the provisions of the following codes and regulations:

- 2024, 2021, 2018, and 2015 International Building Code® (IBC)
- 2024, 2021, 2018, and 2015 International Residential Code® (IRC)
- 2024, 2021, 2018, and 2015 International Energy Conservation Code® (IECC)
- 2023 and 2020 Florida Building Code, Building (FBC, Building– supplement attached
- 2023 and 2020 Florida Building Code, Residential (FBC, Residential) – supplement attached
- 2023 and 2020 Florida Building Code, Energy (FBC, Energy) – supplement attached
- 2022 California Building Code (CBC)-supplement attached
- 2022 California Residential Code (CRC) – supplement attached
- 2023 City of Los Angeles Building Code (LABC) – supplement attached
- 2023 City of Los Angeles Residential Code (LARC) – supplement attached

2.0 LIMITATIONS

Use of ZIP System® Wall Sheathing recognized in this report is subject to the following limitations:

2.1 ZIP System® Wall Sheathing shall be installed in accordance with the applicable code, the manufacturer's published installation instructions, and this report. Where there is a conflict, the most restrictive requirements shall govern.

2.2 ZIP System® Wall Sheathing panels are limited to code approved structural use for wood structural panels with a 24/16, 32/16, or 40/20 span rating, depending on the panel thickness.

2.3 Building envelope performance verification shall be performed as defined in Section C402.5.1.5 of the 2021 IECC, when the 2021 IECC is applicable.

2.4 ZIP System® Wall Sheathing is manufactured in Crystal Hill, VA; Commerce, GA; Broken Bow, OK; Easton, ME; Spring City, TN; and Shawinigan, QC.

3.0 PRODUCT USE

3.1 General: ZIP System® Wall Sheathing panels are used as wall sheathing in accordance with Section 2303.1.5 of the IBC, and Section R602.1.8 of the IRC. The panels are also used as a water-resistive barrier in accordance with Chapter 14 of the IBC and Chapter 7 of the IRC and as the water-resistive barrier required in accordance with IBC Section 2510.6. The sheathing is recognized for use in Type V construction in the IBC and buildings and structures constructed under the IRC.

3.2 Installation:

3.2.1 Installation General: Installation of the ZIP System® Wall Sheathing panels shall comply with the applicable code listed in Section 1.0 of this report, this report, and the manufacturer's published installation instructions. The installation instructions shall be available at the job site during installation. If there are any conflicts between the manufacturer's published instructions and this report, the more stringent requirements shall govern.

3.2.2 Installation of Sheathing Panel: The ZIP System® Wall Sheathing shall be installed with the laminated moisture barrier surface overlay facing the exterior. The panels shall be attached to the framing in accordance with the applicable code listed in Section 1.0 of this report for PS-2 wood structural panels, as applicable. Tongue-and-groove and machined edges are designed to provide the correct gap between panels during installation. Square-edged panels shall be spaced with a 1/8-inch (3.2 mm) minimum gap.

All ZIP System® Wall Sheathing seams shall be sealed with ZIP System™ Flexible Flashing Tape, a self-adhering sheet-type membrane consisting of acrylic adhesive laminated to a polyolefin backing, or ZIP System™ Liquid Flash. The ZIP System™ flashing products are outside the scope of recognition of this report and documentation demonstrating **code compliance shall be provided to the building official for approval upon request. All penetrations of the sheathing surface overlay such as cracking, openings, etc., caused by**

The product described in this Uniform Evaluation Service (UES) Report has been evaluated as an alternative material, design or method of construction in order to satisfy and comply with the intent of the provision of the code, as noted in this report, and for at least equivalence to that prescribed in the code in quality, strength, effectiveness, fire resistance, durability and safety, as applicable, in accordance with Section 104.2.3 of the 2024 IBC and Section 104.11 of previous editions. This document shall only be reproduced in its entirety.

Copyright © 2024 by International Association of Plumbing and Mechanical Officials. All rights reserved. Printed in the United States. Ph: 1-877-4IESRPT • Fax: 909.472.4171 web: www.uniform-es.org • 4755 East Philadelphia Street, Ontario, California 91761-2816 – USA

UES® **EVALUATION REPORT** Number: 544

Originally Issued: 10/20/2017 Revised: 05/14/2024 Valid Through: 10/31/2024

handling or construction work, also shall be sealed. Panel surfaces shall be dry and free from any significant presence of particles, sawdust, or other debris, or protrusions prior to sealing. The tape is available in rolls of varying lengths and widths and, when used for sealing panel seams, shall be a minimum of 3¾ inches (95 mm) wide. The tape shall be centered within ± ½ inch (12.7 mm) of all panel edge seam centers and shall extend a minimum of 1 inch (25.4 mm) past the panel edge T-joint intersections. Wrinkles in the ZIP System™ Flexible Flashing Tape are acceptable unless they create a leak path to the panel seam. If using ZIP System™ liquid flash in lieu of ZIP System™ Flexible Flashing Tape, a minimum of 1-inch of liquid flashing material shall be applied to each panel edge across the seams and T-joint intersections. ZIP System™ liquid flash shall be installed to a minimum thickness of 12 mils (0.305 mm).

3.2.3 Substrate Preparation for Application of Cement Plaster or Adhered Masonry Veneer: Figures 1, 2, and 3 depict stucco or adhered stone wall assembly details when utilizing ZIP System wall sheathing in accordance with the IBC or IRC.

3.3 Air Permeability: A code compliant air barrier assembly is provided by ZIP System® Wall Sheathing panels installed with minimum nominally 2x4 wood studs spaced at a maximum of 24 inches (610 mm) on center and sheathed with minimum 7/16-inch-thick (11.1 mm) ZIP System® Wall Sheathing panels fastened with 2-inch-long (51 mm) 6d common nails spaced at 6 inches (152 mm) on center at the perimeter and 12 inches (305 mm) on center in the field. The joints between the panels shall be sealed with ZIP System™ Flexible Flashing Tape. The air barrier assembly has an air leakage rate of infiltration of 0.006 cfm/ft² (0.0294 L/s·m²) and exfiltration of 0.0061cfm/ft² (0.0305 L/s·m²) under a pressure differential of 0.3-inch water gauge (75 Pa) when tested in accordance with ASTM E2357. The assembly meets the requirements for an air barrier assembly in accordance with Section C402.5 of the IECC.

4.0 PRODUCT DESCRIPTION

4.1 ZIP System® Wall Sheathing Panels. The ZIP System® Wall Sheathing panels are wood structural panels with a moisture barrier surface laminated on the exterior side. The panels are installed with ZIP System™ Flexible Flashing Tape or Zip System™ Liquid Flash sealing all seams, which allows the panels to be used to meet the water-resistive barrier requirements in Chapter 14 and Section 2510.6 of the IBC and Section R703.7.3 of the IRC. The wood structural panel substrate complies with US DOC PS-2, as applicable. The moisture barrier surface on the wood structural panel is a medium density phenolic-impregnated overlay with a water resistance equivalence to an ASTM E2556 Type II or 60 minute Grade D water-resistive barrier. The ZIP System Wall sheathing meets the minimum drainage efficiency of 90 percent when tested in accordance with ASTM E2273. The standard-size panels are nominally 4 feet by 8 feet (1219 mm by 2438 mm). Panels longer than 8 feet (2438 mm) in length are also produced. The panels are available in 7/16-, 15/32-, 1/2-, and 5/8-inch performance categories (11.1 mm, 11.9 mm, 12.7 mm, and 15.9 mm) with either a self-spacing or square edge profile, and with a tongue-and-groove edge profile also available for the 5/8-inch-thick (15.9 mm) panels.

5.0 IDENTIFICATION

Huber Engineered Woods ZIP System® Wall Sheathing is identified by the Huber Engineered Woods name and trademark, the product name, the evaluation report number (ER-544), and the DOC required certification mark for wood structural panels. Either IAPMO Uniform Evaluation Service Mark of Conformity may also be used as shown below:

IAPMO ES® or UES®

IAPMO UES ER-544

6.0 SUBSTANTIATING DATA

6.1 ICC-ES Acceptance Criteria for Water-resistive Membranes Factory-bonded to Wood-based Structural Sheathing, Used as Water Resistive Barriers (AC310) Approved January 2024.

6.2 Reports of Hygrothermal Analyses.

6.3 Report of air leakage rate testing in accordance with ASTM E2357.

6.4 Report of drainage efficiency of exterior wall installation in accordance with ASTM E2273.

6.5 Test reports are from laboratories in compliance with ISO/IEC 17025.

7.0 STATEMENT OF RECOGNITION

This evaluation report describes the results of research completed by IAPMO Uniform Evaluation Service on Huber Engineered Woods ZIP System® Wall Sheathing to assess conformance to the codes shown in Section 1.0 of this report and serves as documentation of the product certification. Huber Engineered Woods ZIP System Wall Sheathing is produced at locations noted in Section 2.4 of this report under a quality control program with periodic inspection under the supervision of IAPMO UES.

For additional information about this evaluation report please visit www.uniform-es.org or email us at info@uniform-es.org

UES® **EVALUATION REPORT** Number: 544

Originally Issued: 10/20/2017 Revised: 05/14/2024 Valid Through: 10/31/2024

FIGURE 1
ZIP System® Sheathing for use with Exterior Plaster with a rainscreen. The perform ace of Zip System Rainscreen is outside the scope of this report.

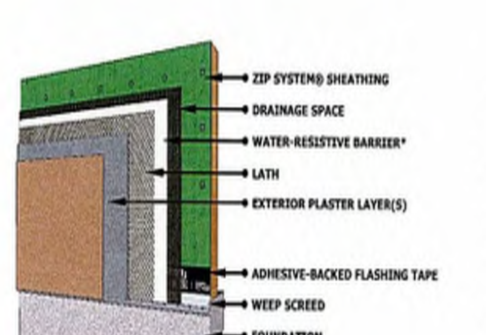

FIGURE 2
ZIP System® Sheathing with a drainage space and water resistive barrier. Integrity of the drainage space must be maintained by preventing mortor or plaster from entering the drainage space. Use either a fabric-backed drainage medium or a secondary water resitive barrier as a bond break.

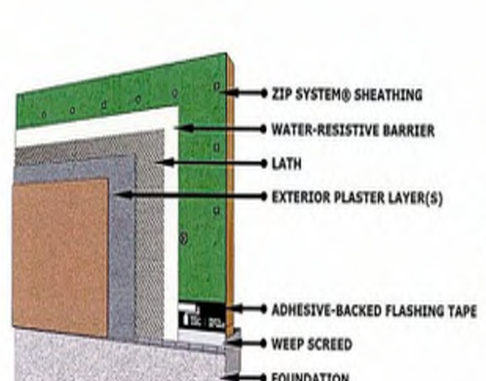

FIGURE 3
ZIP System® Sheathing for use with Exterior Stucco and a second water-Resistve Barrier.

UES® **EVALUATION REPORT** Number: 544

Originally Issued: 10/20/2017 Revised: 05/14/2024 Valid Through: 10/31/2024

FLORIDA SUPPLEMENT

HUBER ENGINEERED WOODS, LLC
One Source Square
10925 David Taylor Drive, Suite 300
Charlotte, NC 28262
(800) 933-9220
www.huberwood.com

ZIP SYSTEM® WALL SHEATHING

CSI Sections:
06 16 00 Sheathing
07 25 00 Water Resistive Barriers/Weather Barriers
07 27 00 Air Barriers

1.0 RECOGNITION

Huber Engineered Woods ZIP System® Wall Sheathing described in IAPMO UES Evaluation Report ER-544 is a satisfactory alternative to the sheathing prescribed in the following codes:

- 2023 and 2020 Florida Building Code, Building (FBC, Building)
- 2023 and 2020 Florida Building Code, Residential (FBC, Residential)
- 2023 and 2020 Florida Building Code, Energy (FBC, Energy)

2.0 LIMITATIONS

Use of the ZIP System® Wall Sheathing recognized in this report supplement is subject to the following limitations:

2.1 Installation shall be in accordance with the 2021 and 2018 International Building Code and the 2021 and 2018 International Residential Code, as applicable, as noted in ER-544, and the manufacturer's published installation instructions.

2.2 Use of the ZIP System® Wall Sheathing for compliance with the high-velocity hurricane zone provisions of the FBC, Building, and FBC, Residential, has not been evaluated and is outside the scope of this evaluation report.

2.3 Flashing shall comply with Section 1405.4 of the FBC, Building, and Section 703.4 of the FBC, Residential, codes, as applicable.

2.4 For products falling under Section (5)(d) of Florida Rule 61G20-3.008, verification is required that the report holder's quality assurance program is audited by a quality assurance entity, approved by the Florida Building Commission (or the building official when the report holder does not possess an approval by the Commission), to provide oversight and determine that the products are being manufactured as described in this evaluation report to establish continual product performance.

2.5 This supplement expires concurrently with ER-544.

For additional information about this evaluation report please visit www.uniform-es.org or email us at info@uniform-es.org

UES® **EVALUATION REPORT** Number: 544

Originally Issued: 10/20/2017 Revised: 05/14/2024 Valid Through: 10/31/2024

CALIFORNIA SUPPLEMENT

HUBER ENGINEERED WOODS, LLC
One Source Square
10925 David Taylor Drive, Suite 300
Charlotte, NC 28262
(800) 933-9220
www.huberwood.com

ZIP SYSTEM® WALL SHEATHING

CSI Sections:
06 16 00 Sheathing
07 25 00 Water Resistive Barriers/Weather Barriers
07 27 00 Air Barriers

1.0 RECOGNITION

Huber Engineered Woods ZIP System® Wall Sheathing described in IAPMO UES Evaluation Report ER-544 is a satisfactory alternative to the sheathing prescribed in the following codes:

- 2022 California Building Code (CBC)
- 2022 California Residential Code (CRC)

2.0 LIMITATIONS

Use of the ZIP System® Wall Sheathing recognized in this report supplement is subject to the following limitations:

2.1 Use and installation shall be in accordance with ER-544, the manufacturer's published installation instructions, and the California Building Code or California Residential Code, as applicable.

2.2 The site-specific design criteria for wind speed, exposure category, and seismic design category shall be determined in accordance with Chapter 16 of the CBC or Section R301 of the CRC, as applicable.

2.3 Special Inspections, where required for use of ZIP System® Wall Sheathing, shall be in accordance with CBC Chapter 17 or Chapter 17A, as applicable for the building application in accordance with the Matrix Adoption Tables of the CBC, including special inspections for light frame construction where required by the code.

2.4 This supplement expires concurrently with ER-544.

For additional information about this evaluation report please visit www.uniform-es.org or email at info@uniform-es.org

UES® **EVALUATION REPORT** Number: 544

Originally Issued: 10/20/2017 Revised: 05/14/2024 Valid Through: 10/31/2024

CITY OF LOS ANGELES SUPPLEMENT

HUBER ENGINEERED WOODS, LLC
One Source Square
10925 David Taylor Drive, Suite 300
Charlotte, NC 28262
(800) 933-9220
www.huberwood.com

ZIP SYSTEM® WALL SHEATHING

CSI Sections:
06 16 00 Sheathing
07 25 00 Water Resistive Barriers/Weather Barriers
07 27 00 Air Barriers

1.0 RECOGNITION

Huber Engineered Woods ZIP System® Wall Sheathing, described in IAPMO UES Evaluation Report ER-544 and this LABC and LARC Supplement, has been evaluated for water resistance and air leakage in accordance with the LABC and LARC. ZIP System® Wall Sheathing is recognized for use under the following codes:

- 2023 City of Los Angeles Building Code (LABC)
- 2023 City of Los Angeles Residential Code (LARC)

2.0 LIMITATIONS

Use of the ZIP System® Wall Sheathing recognized in this report supplement is subject to the following limitations:

2.1 Use and installation shall be in accordance with the California Supplement to ER-544, the manufacturer's published installation instructions, and the City of Los Angeles Building and Residential Codes, as applicable. A copy of the manufacturer's installation instructions shall be available on-site for Registered Deputy Inspectors. Where conflicts occur, the more restrictive shall govern.

2.2 Design criteria shall be determined in accordance with 2023 LABC Chapter 16 or 2023 LARC Section R301, as applicable.

2.3 Special inspections, where required, shall be in accordance with 2023 LABC Chapter 17, as applicable.

2.4 This supplement expires concurrently with ER-544.

For additional information about this evaluation report please visit www.uniform-es.org or email at info@uniform-es.org

TSG — Making Dreams Come True
TOTAL SOLUTIONS GROUP
258 Southhall Lane, Suite 200
Maitland, Florida, 32751
(407) 880 2333
100% Employee Owned
myTSGhome.com
CA No. 9161 AA26003115

TO THE BEST OF THE ENGINEER'S KNOWLEDGE AND UNDERSTANDING, THE STRUCTURAL PLANS AND SPECIFICATIONS COMPLY WITH THE FLORIDA BUILDING CODE SIGNED AND SEALED FOR THE STRUCTURAL PORTION OF THIS DRAWING.

MARONDA Homes
3993 West First Street | Sanford, FL 32771 | (407) 302-9871

Plan Revisions Date:	
1	1-25-21 Revised to 2020 7th Edition codes
2	1-1-24 2023 8th Edition Code
3	
4	
5	
6	
7	
8	
9	
10	
11	
12	
13	
14	

Tech: ERAND

Job Information:

Spec Home
Plan Name: ZIP System Details
Garage Side:
Community:
Lot: Block:
Job no.
Address:

Reference No.

Sheet: ZS-DR

ZIP ROOF DETAILS

Product Approval
MULLIONS
FL18504

MI WINDOWS AND DOORS, LLC — M-1926 VERTICAL MULLION 96" MULLION SPAN — NOTES

REVISIONS			
REV	DESCRIPTION	DATE	APPROVED
A	REVISED INSTALLATION DETAILS	08/07/15	R.L.
B	REVISED ANCHORING NOTES	05/10/17	R.L.
C	REVISED CHARTS	10/26/18	R.L.

NOTES:
1) THE PRODUCT SHOWN HEREIN IS DESIGNED AND MANUFACTURED TO COMPLY WITH REQUIREMENTS OF THE FLORIDA BUILDING CODE.
2) WOOD FRAMING TO BE DESIGNED AND ANCHORED TO PROPERLY TRANSFER ALL LOADS TO STRUCTURE. FRAMING IS THE RESPONSIBILITY OF THE ARCHITECT OR ENGINEER OF RECORD.
3) ALLOWABLE STRESS INCREASE OF 1/3 WAS NOT USED IN THE DESIGN OF THE PRODUCT SHOWN HEREIN. WIND LOAD DURATION FACTOR Cd=1.6 WAS USED FOR WOOD ANCHOR CALCULATIONS.
4) APPROVED IMPACT PROTECTIVE SYSTEM IS NOT REQUIRED FOR THIS PRODUCT IN WIND BORNE DEBRIS REGIONS UP TO WIND ZONE 3.
5) DESIGN PRESSURE AND INSTALLATION DETAILS SHOWN IN THIS DOCUMENT APPLY ONLY TO MULLION. WINDOWS MUST BE APPROVED UNDER SEPARATE APPROVAL.
6) SINGLE WINDOWS TO BE MULLED ARE NOT LIMITED TO THOSE SHOWN IN THIS DRAWING. WINDOWS MUST BE MANUFACTURED BY MI WINDOWS AND DOORS, INC.
7) DESIGN PRESSURE OF MULLED UNIT SHALL BE CONTROLLED BY THE LESSER DESIGN PRESSURE OF THE MULLION OR THE INDIVIDUAL WINDOW OR DOOR UNIT.
8) UNITS MAY BE MULLED TOGETHER INDEFINITELY AS LONG AS SINGLE UNIT WIDTH AND HEIGHT ARE NOT EXCEEDED AND MULLION IS ANCHORED AS SHOWN HEREIN.
9) MULLION VERTICAL INSTALLATION IS SHOWN, MULLION MAY BE USED IN HORIZONTAL APPLICATIONS AS LONG AS DIMENSIONS INDICATED HEREIN ARE NOT EXCEEDED AND MULLION IS ANCHORED ACCORDING TO THIS DOCUMENT.

ANCHORING NOTES:
1) FOR ANCHORING INTO WOOD FRAMING OR 2X BUCK USE #10 WOOD SCREW WITH SUFFICIENT LENGTH TO ACHIEVE A 1 3/8" MINIMUM EMBEDMENT. LOCATE ANCHORS AS SHOWN IN INSTALLATION DETAILS SHEET 3.
2) FOR ANCHORING INTO CONCRETE USE 3/16" ELCO ULTRACON TAPCON WITH SUFFICIENT LENGTH TO ACHIEVE A 1 1/4" MINIMUM EMBEDMENT WITH 1" MINIMUM EDGE DISTANCE. LOCATE ANCHORS AS SHOWN IN INSTALLATION DETAILS SHEET 4.
3) FOR ANCHORING INTO METAL FRAMING USE #10 SMS OR SELF DRILLING SCREW WITH SUFFICIENT LENGTH TO ACHIEVE A 3 THREADS MINIMUM BEYOND STRUCTURE INTERIOR WALL. LOCATE ANCHORS AS SHOWN IN ELEVATIONS AND INSTALLATION DETAILS.
4) ALL FASTENERS TO BE CORROSION RESISTANT.
5) INSTALLATION ANCHORS SHALL BE INSTALLED IN ACCORDANCE WITH ANCHOR MANUFACTURER'S INSTALLATION INSTRUCTIONS, AND ANCHORS SHALL NOT BE USED IN SUBSTRATES WITH STRENGTHS LESS THAN THE MINIMUM STRENGTH SPECIFIED BELOW:
A. WOOD – MINIMUM SPECIFIC GRAVITY OF G=0.42
B. CONCRETE – MINIMUM COMPRESSIVE STRENGTH OF 3,200 PSI.
C. MASONRY – STRENGTH CONFORMANCE TO ASTM C-90, GRADE N, TYPE 1 (OR GREATER).
D. METAL – STEEL 18GA (.048") FY=33KSI/FU=52KSI OR ALUMINUM 6063-T5 FU=30KSI .0625" THICK MINIMUM.

DESIGN PRESSURE TABLE INSTRUCTIONS:
1) DEFINE REQUIRED DESIGN LOAD PER FLORIDA BUILDING CODE CHAPTER 16.
2) DETERMINE TRIBUTARY WIDTH AND MULLION SPAN BASED ON PRODUCT TO BE INSTALLED. SEE FORMULA FOR TRIBUTARY WIDTH.
3) LOCATE MULLION SPAN (UNIT HEIGHT) AND TRIBUTARY WIDTH. AT THE INTERSECTION OF ROW AND COLUMN CONTAINING THE MULLION SPAN AND TRIBUTARY WIDTH RESPECTIVELY IS THE MULLION RATING FOR PRODUCT IN STEP 2.
MULLION RATING MUST BE EQUAL OR GREATER THAN REQUIRED DESIGN PRESSURE OBTAINED IN STEP 1.

$$\text{TRIBUTARY WIDTH} = \frac{W1 + W2}{2}$$

TABLE OF CONTENTS

SHEET NO.	DESCRIPTION
1	NOTES
2	CONFIGURATIONS AND DP CHART
3	INSTALLATION DETAILS
4	COMPONENTS

SIGNED: 10/25/2018

MI WINDOWS AND DOORS, LLC
650 WEST MARKET STREET
GRATZ, PA 17030
M-1926 VERTICAL MULLION
96" MULLION SPAN
NOTES
DRAWN: V.L. DWG NO. 08-01445 REV C
SCALE NTS DATE 01/11/12 SHEET 1 OF 4
L. ROBERTO LOMAS P.E.
1432 WOODFORD RD LEWISVILLE, NC 27023
434-688-0609 rllomas@lrlomaspe.com
Luis R. Lomas P.E.
FL No.: 62514

M-1926 VERTICAL MULLION 96" MULLION SPAN — CONFIGURATIONS AND DP CHARTS

REVISIONS			
REV	DESCRIPTION	DATE	APPROVED
A	REVISED INSTALLATION DETAILS	08/07/15	R.L.
B	REVISED ANCHORING NOTES	05/10/17	R.L.
C	REVISED CHARTS	10/26/18	R.L.

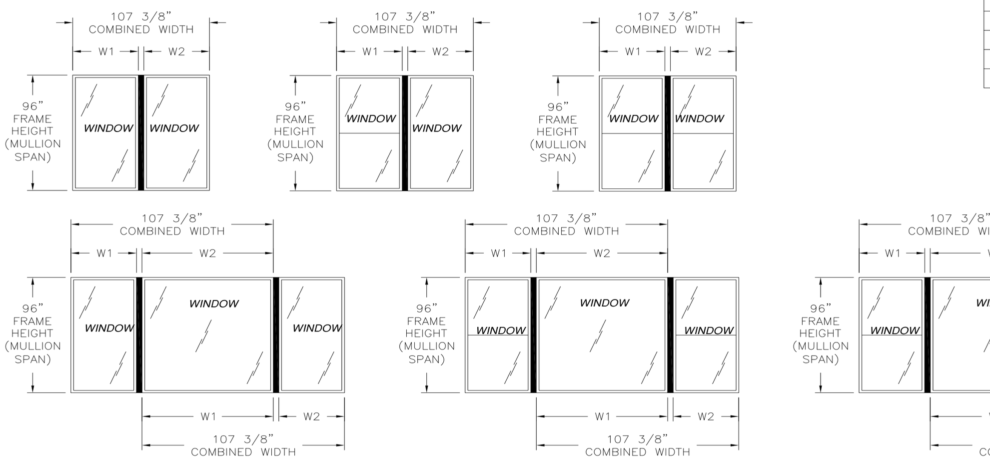

APPROVED CONFIGURATIONS
MULTIPLE UNITS MAYBE MULLED TOGETHER AS LONG AS COMBINED WIDTH DOES NOT EXCEED 107 3/8" AS SHOWN HEREIN.

Design pressure rating (psf)
Units anchored into wood and metal framing

Mullion span (in)	Tributary width (in) 18.13	25.50	36.00	42.00	48.00	52.13
25.00	120.0	120.0	120.0	120.0	120.0	120.0
37.38	120.0	120.0	120.0	120.0	120.0	120.0
49.63	120.0	98.3	81.2	76.9	75.2	75.1
62.00	96.4	73.6	58.4	53.7	50.7	49.4
65.63	90.2	68.6	53.9	49.3	46.3	44.8
72.00	81.0	61.2	47.6	43.2	40.1	38.6
84.00	62.1	45.0	33.1	29.1	26.3	24.9
90.00	50.4	36.4	26.6	23.4	21.0	19.8
96.00	41.4	29.9	21.8	19.1	17.1	16.0

Design pressure rating (psf)
Units anchored into masonry/concrete

Mullion span (in)	Tributary width (in) 18.13	25.50	36.00	42.00	48.00	52.13
25.00	120.0	120.0	120.0	120.0	120.0	120.0
37.38	120.0	120.0	120.0	120.0	120.0	120.0
49.63	120.0	109.2	90.2	85.4	83.5	83.4
62.00	107.1	81.8	64.8	59.7	56.3	54.8
65.63	100.2	76.2	59.9	54.8	51.4	49.8
72.00	90.0	68.0	52.8	48.0	44.0	42.0
84.00	62.1	45.0	33.1	29.1	26.3	24.9
90.00	50.4	36.4	26.6	23.4	21.0	19.8
96.00	41.4	29.9	21.8	19.1	17.1	16.0

LARGE AND SMALL MISSILE IMPACT, LEVEL D, WIND ZONE 3

SIGNED: 10/25/2018

MI WINDOWS AND DOORS, LLC
650 WEST MARKET STREET
GRATZ, PA 17030
M-1926 VERTICAL MULLION
96" MULLION SPAN
CONFIGURATIONS AND DP CHARTS
DRAWN: V.L. DWG NO. 08-01445 REV C
SCALE NTS DATE 01/11/12 SHEET 2 OF 4
L. ROBERTO LOMAS P.E.
1432 WOODFORD RD LEWISVILLE, NC 27023
434-688-0609 rllomas@lrlomaspe.com
Luis R. Lomas P.E.
FL No.: 62514

M-1926 VERTICAL MULLION 96" MULLION SPAN — INSTALLATION DETAILS

REVISIONS			
REV	DESCRIPTION	DATE	APPROVED
A	REVISED INSTALLATION DETAILS	08/07/15	R.L.
B	REVISED ANCHORING NOTES	05/10/17	R.L.
C	REVISED CHARTS	10/26/18	R.L.

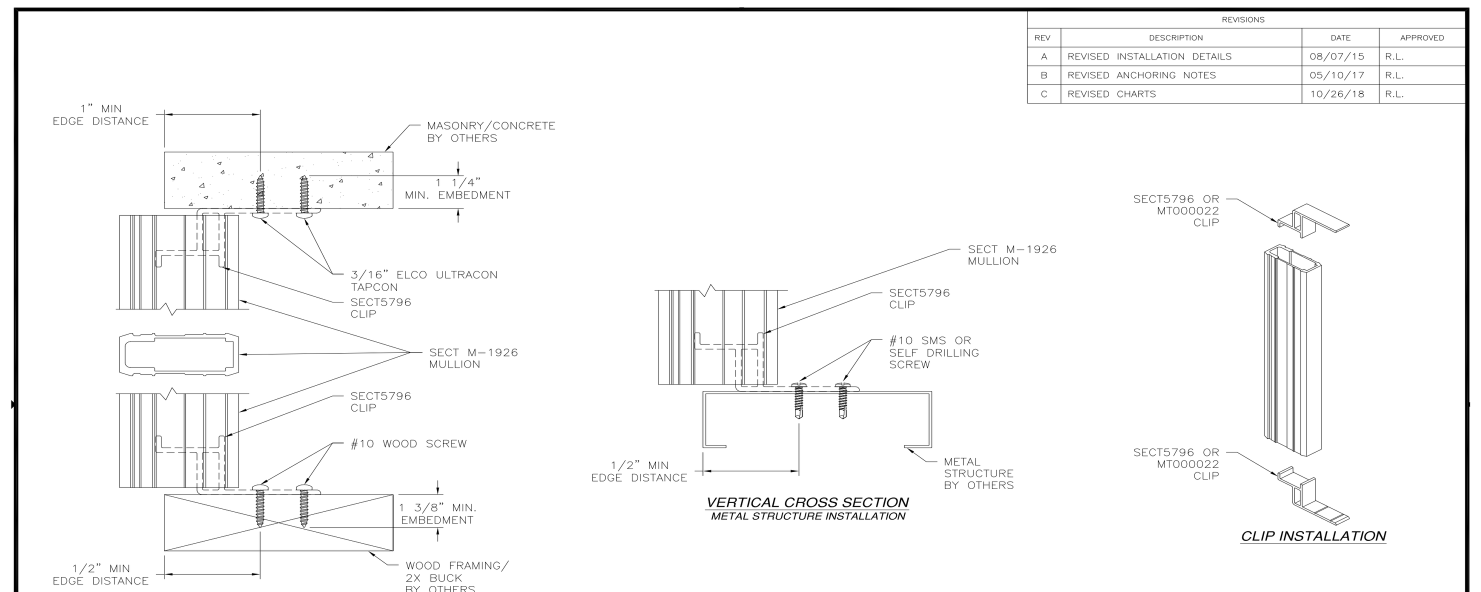

SIGNED: 10/25/2018

MI WINDOWS AND DOORS, LLC
650 WEST MARKET STREET
GRATZ, PA 17030
M-1926 VERTICAL MULLION
96" MULLION SPAN
INSTALLATION DETAILS
DRAWN: V.L. DWG NO. 08-01445 REV C
SCALE NTS DATE 01/11/12 SHEET 3 OF 4
L. ROBERTO LOMAS P.E.
1432 WOODFORD RD LEWISVILLE, NC 27023
434-688-0609 rllomas@lrlomaspe.com
Luis R. Lomas P.E.
FL No.: 62514

M-1926 VERTICAL MULLION 96" MULLION SPAN — COMPONENTS

REVISIONS			
REV	DESCRIPTION	DATE	APPROVED
A	REVISED INSTALLATION DETAILS	08/07/15	R.L.
B	REVISED ANCHORING NOTES	05/10/17	R.L.
C	REVISED CHARTS	10/26/18	R.L.

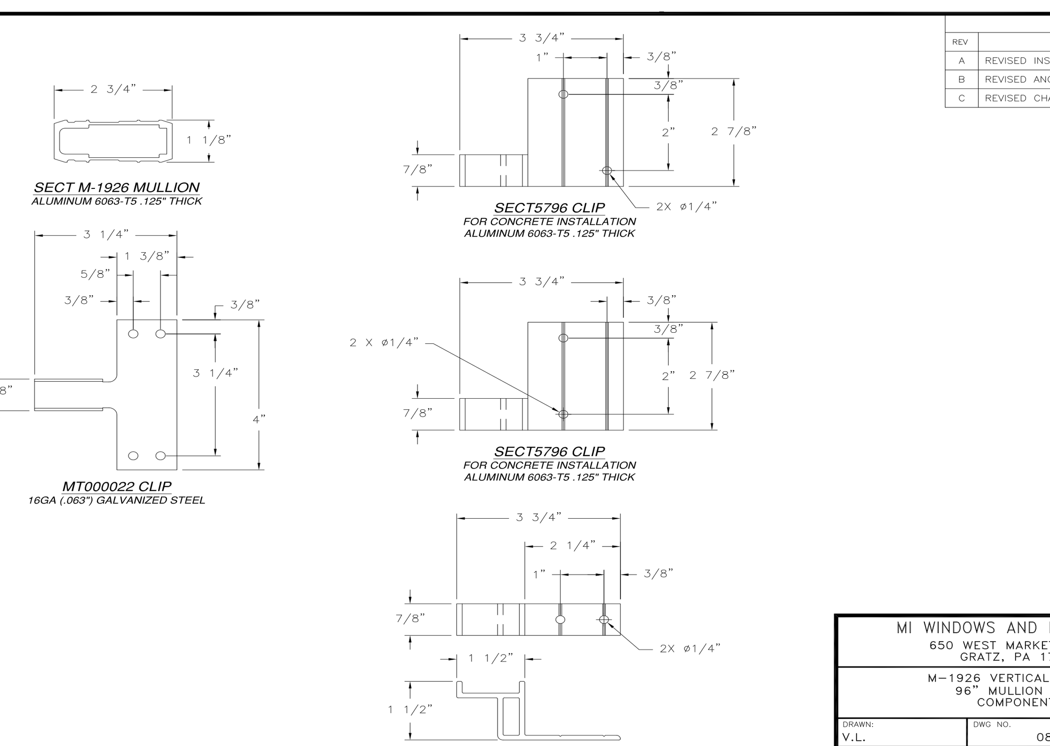

SIGNED: 10/25/2018

MI WINDOWS AND DOORS, LLC
650 WEST MARKET STREET
GRATZ, PA 17030
M-1926 VERTICAL MULLION
96" MULLION SPAN
COMPONENTS
DRAWN: V.L. DWG NO. 08-01445 REV C
SCALE NTS DATE 01/11/12 SHEET 4 OF 4
L. ROBERTO LOMAS P.E.
1432 WOODFORD RD LEWISVILLE, NC 27023
434-688-0609 rllomas@lrlomaspe.com
Luis R. Lomas P.E.
FL No.: 62514

M-1926 HORIZONTAL MULLION SINGLE, TWIN AND TRIPLE WITH TRANSOM — ELEVATION AND GENERAL NOTES

REVISIONS			
REV	DESCRIPTION	DATE	APPROVED
A	REVISED INSTALLATION DETAILS	08/07/15	R.L.
B	REVISED ANCHORING NOTES	10/17/17	R.L.

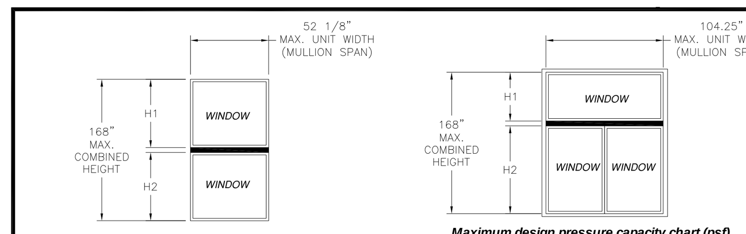

Maximum design presssure (psf)

Tributary height (in)	Mullion span (in) 18.00	24.00	30.00	36.00	42.00	48.00	52.13
18.00	120.0	120.0	120.0	120.0	120.0	120.0	119.1
24.00	120.0	120.0	120.0	120.0	120.0	107.0	96.0
30.00	120.0	120.0	120.0	120.0	114.1	93.4	83.0
36.00	120.0	120.0	120.0	120.0	107.0	85.6	75.3
42.00	120.0	120.0	120.0	120.0	104.8	81.5	70.7
48.00	120.0	120.0	120.0	120.0	104.8	80.3	68.5
54.00	120.0	120.0	120.0	120.0	104.8	80.3	68.1
60.00	120.0	120.0	120.0	120.0	104.8	80.3	68.1
66.00	120.0	120.0	120.0	120.0	104.8	80.3	68.1
72.00	120.0	120.0	120.0	120.0	104.8	80.3	68.1
78.00	120.0	120.0	120.0	120.0	104.8	80.3	68.1
84.00	120.0	120.0	120.0	120.0	104.8	80.3	68.1

LARGE AND SMALL MISSILE IMPACT, LEVEL D, WIND ZONE 3
DIMENSIONS IN CHART ARE FRAME DIMENSIONS AND DO NOT INCLUDE FLANGE

Maximum design pressure capacity chart (psf)

Tributary Height (in)	Mullion Span and individual unit width (in) 36.00 / 18.00	48.00 / 24.00	60.00 / 30.00	72.00 / 36.00	84.00 / 42.00	96.00 / 48.00	104.25 / 52.13
18.00	120.0	120.0	100.7	81.5	60.9	40.5	31.5
24.00	120.0	107.0	80.3	64.2	46.5	30.8	24.0
30.00	120.0	92.5	68.5	54.1	37.9	25.1	19.5
36.00	120.0	82.8	60.8	47.6	32.3	21.3	16.5
42.00	118.1	76.1	55.2	43.0	28.4	18.6	-
48.00	110.5	71.3	51.1	39.5	25.5	16.6	-
54.00	103.8	67.6	48.0	36.8	23.3	15.1	-
60.00	97.8	64.2	45.7	34.7	21.5	-	-
66.00	92.5	61.1	43.7	33.0	20.1	-	-
72.00	87.8	58.4	41.9	31.7	19.0	-	-
78.00	83.5	55.8	40.3	30.6	18.1	-	-
84.00	79.6	53.5	38.8	29.5	17.4	-	-

LARGE AND SMALL MISSILE IMPACT, LEVEL D, WIND ZONE 3
DIMENSIONS IN CHART ARE FRAME DIMENSIONS AND DO NOT INCLUDE FLANGE

NOTES:
1) THE PRODUCT SHOWN HEREIN IS DESIGNED AND MANUFACTURED TO COMPLY WITH REQUIREMENTS OF THE FLORIDA BUILDING CODE.
2) WOOD FRAMING AND MASONRY OPENING TO BE DESIGNED AND ANCHORED TO PROPERLY TRANSFER ALL LOADS TO STRUCTURE. FRAMING AND MASONRY OPENING IS THE RESPONSIBILITY OF THE ARCHITECT OR ENGINEER OF RECORD.
3) ALLOWABLE STRESS INCREASE OF 1/3 WAS NOT USED IN THE DESIGN OF THE PRODUCT SHOWN HEREIN. WIND LOAD DURATION FACTOR Cd=1.6 WAS USED FOR WOOD ANCHOR CALCULATIONS.
4) APPROVED IMPACT PROTECTIVE SYSTEM IS NOT REQUIRED FOR THIS PRODUCT IN WIND BORNE DEBRIS REGIONS UP TO WIND ZONE 3
5) DESIGN PRESSURE AND INSTALLATION DETAILS SHOWN IN THIS DOCUMENT APPLY ONLY TO THE MULLION. WINDOWS MUST BE APPROVED UNDER SEPARATE APPROVAL.
6) SINGLE WINDOWS TO BE MULLED ARE NOT LIMITED TO THOSE SHOWN IN THIS DRAWING. SINGLE UNITS TO BE MULLED TOGETHER MUST BE MANUFACTURED BY MI WINDOWS AND DOORS
7) DESIGN PRESSURE OF MULLED UNIT SHALL BE CONTROLLED BY THE LESSER DESIGN PRESSURE OF THE MULLION OR THE INDIVIDUAL WINDOW UNIT.
8) VERTICAL MULLIONS ARE NOT PART OF THIS APPROVAL. VERTICAL MULLIONS USED TO MULL UNITS SIDE BY SIDE MUST HAVE SEPARATE APPROVAL.
9) FOR ADDITIONAL APPROVED CONFIGURATIONS SEE SHEET 2.

DESIGN PRESSURE TABLE INSTRUCTIONS:
1) DEFINE REQUIRED DESIGN LOAD PER FLORIDA BUILDING CODE CHAPTER 16.
2) DETERMINE TRIBUTARY HEIGHT AND MULLION SPAN BASED ON PRODUCT TO BE INSTALLED. SEE FORMULA FOR TRIBUTARY HEIGHT.
3) LOCATE MULLION SPAN (UNIT WIDTH) AND TRIBUTARY HEIGHT. AT THE INTERSECTION OF COLUMN AND ROW CONTAINING THE MULLION SPAN AND TRIBUTARY WIDTH RESPECTIVELY IS THE MULLION RATING FOR PRODUCT IN STEP 2.
MULLION RATING MUST BE EQUAL OR GREATER THAN REQUIRED DESIGN PRESSURE OBTAINED IN STEP 1.

$$\text{TRIBUTARY HEIGHT} = \frac{H1 + H2}{2}$$

TABLE OF CONTENTS

SHEET NO.	DESCRIPTION
1, 2	ELEVATION, NOTES AND DESIGN PRESSURE CHARTS
3	INSTALLATION DETAILS

SIGNED: 10/17/2017

MI WINDOWS AND DOORS, LLC
650 WEST MARKET STREET
GRATZ, PA 17030-0370
M-1926 HORIZONTAL MULLION
SINGLE, TWIN AND TRIPLE WITH TRANSOM
ELEVATION AND GENERAL NOTES
DRAWN: V.L. DWG NO. 08-01455 REV B
SCALE NTS DATE 03/06/12 SHEET 1 OF 3
L. ROBERTO LOMAS P.E.
1432 WOODFORD RD LEWISVILLE, NC 27023
434-688-0609 rllomas@lrlomaspe.com
Luis R. Lomas P.E.
FL No.: 62514

M-1926 HORIZONTAL MULLION SINGLE, TWIN AND TRIPLE WITH TRANSOM — ELEVATION AND COMPONENTS

REVISIONS			
REV	DESCRIPTION	DATE	APPROVED
A	REVISED INSTALLATION DETAILS	08/07/15	R.L.
B	REVISED ANCHORING NOTES	10/17/17	R.L.

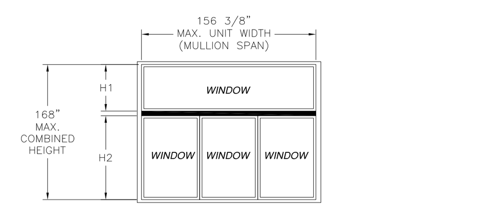

Maximum design pressure capacity chart (psf)

Tributary Height (in)	Mullion Span and individual unit width (in) 54.00 / 18.00	72.00 / 24.00	90.00 / 30.00	108.00 / 36.00	126.00 / 42.00	144.00 / 48.00	156.38 / 52.13
18.00	114.1	81.5	50.2	28.9	18.1	-	-
24.00	90.9	64.2	38.1	21.9	-	-	-
30.00	76.7	53.8	31.0	17.7	-	-	-
36.00	67.1	46.7	26.2	-	-	-	-
42.00	60.4	41.6	22.8	-	-	-	-
48.00	55.5	37.8	20.3	-	-	-	-
54.00	51.9	34.8	18.4	-	-	-	-
60.00	48.9	32.5	16.9	-	-	-	-
66.00	46.3	30.7	15.7	-	-	-	-
72.00	43.9	29.2	-	-	-	-	-
78.00	41.8	27.9	-	-	-	-	-
84.00	39.8	26.8	-	-	-	-	-

LARGE AND SMALL MISSILE IMPACT, LEVEL D, WIND ZONE 3
DIMENSIONS IN CHART ARE FRAME DIMENSIONS AND DO NOT INCLUDE FLANGE

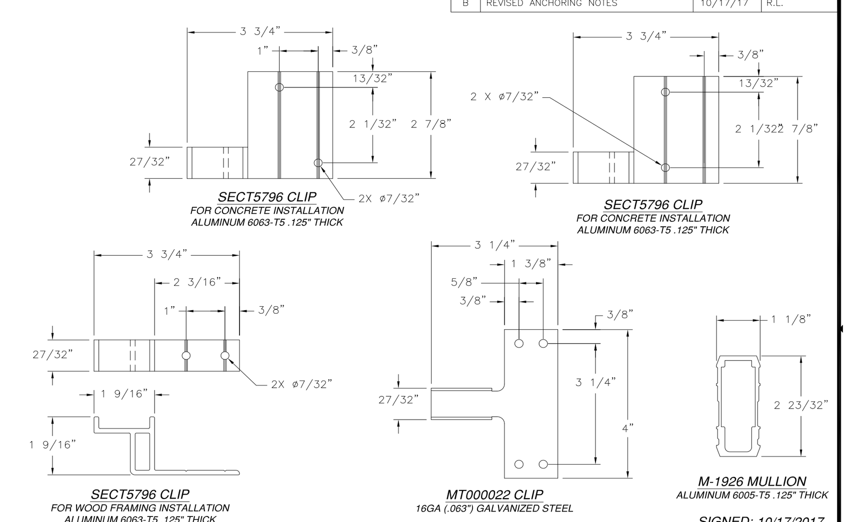

DESIGN PRESSURE TABLE INSTRUCTIONS:
1) DEFINE REQUIRED DESIGN LOAD PER FLORIDA BUILDING CODE CHAPTER 16.
2) DETERMINE TRIBUTARY HEIGHT AND MULLION SPAN BASED ON PRODUCT TO BE INSTALLED. SEE FORMULA FOR TRIBUTARY HEIGHT.
3) LOCATE MULLION SPAN (UNIT WIDTH) AND TRIBUTARY HEIGHT. AT THE INTERSECTION OF COLUMN AND ROW CONTAINING THE MULLION SPAN AND TRIBUTARY WIDTH RESPECTIVELY IS THE MULLION RATING FOR PRODUCT IN STEP 2.
MULLION RATING MUST BE EQUAL OR GREATER THAN REQUIRED DESIGN PRESSURE OBTAINED IN STEP 1.

$$\text{TRIBUTARY HEIGHT} = \frac{H1 + H2}{2}$$

SIGNED: 10/17/2017

MI WINDOWS AND DOORS, LLC
650 WEST MARKET STREET
GRATZ, PA 17030-0370
M-1926 HORIZONTAL MULLION
SINGLE, TWIN AND TRIPLE WITH TRANSOM
ELEVATION AND COMPONENTS
DRAWN: V.L. DWG NO. 08-01455 REV B
SCALE NTS DATE 03/06/12 SHEET 2 OF 3
L. ROBERTO LOMAS P.E.
1432 WOODFORD RD LEWISVILLE, NC 27023
434-688-0609 rllomas@lrlomaspe.com
Luis R. Lomas P.E.
FL No.: 62514

M-1926 HORIZONTAL MULLION SINGLE, TWIN AND TRIPLE WITH TRANSOM — INSTALLATION DETAILS

REVISIONS			
REV	DESCRIPTION	DATE	APPROVED
A	REVISED INSTALLATION DETAILS	08/07/15	R.L.
B	REVISED ANCHORING NOTES	10/17/17	R.L.

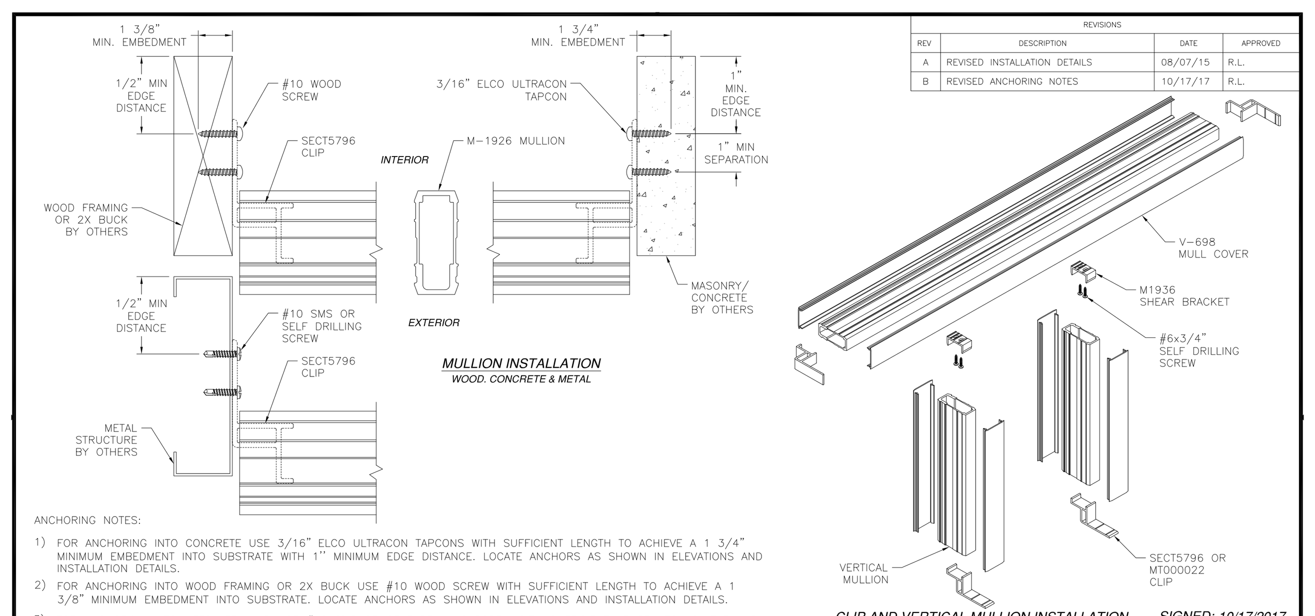

ANCHORING NOTES:
1) FOR ANCHORING INTO CONCRETE USE 3/16" ELCO ULTRACON TAPCONS WITH SUFFICIENT LENGTH TO ACHIEVE A 1 3/4" MINIMUM EMBEDMENT INTO SUBSTRATE WITH 1" MINIMUM EDGE DISTANCE. LOCATE ANCHORS AS SHOWN IN ELEVATIONS AND INSTALLATION DETAILS.
2) FOR ANCHORING INTO WOOD FRAMING OR 2X BUCK USE #10 WOOD SCREW WITH SUFFICIENT LENGTH TO ACHIEVE A 1 3/8" MINIMUM EMBEDMENT INTO SUBSTRATE. LOCATE ANCHORS AS SHOWN IN ELEVATIONS AND INSTALLATION DETAILS.
3) FOR ANCHORING INTO METAL FRAMING USE #10 SMS OR SELF DRILLING SCREW WITH SUFFICIENT LENGTH TO ACHIEVE A 3 THREADS MINIMUM BEYOND STRUCTURE INTERIOR WALL. LOCATE ANCHORS AS SHOWN IN ELEVATIONS AND INSTALLATION DETAILS.
4) FOR ATTACHING WINDOW UNITS TO MULLION USE #10 TEK SELF TAPPING SCREWS WITH SUFFICIENT LENGTH TO ACHIEVE A MINIMUM EMBEDMENT OF THREE THREADS PAST THE MULLION WALL. LOCATE SCREWS 6" FROM EACH MULLION END AND 12" MAX. O.C. THEREAFTER. STAGGER SCREWS AT EACH WINDOW.
5) FOR WINDOW UNITS ANCHORING SCHEDULE REFER TO WINDOW APPROVED INSTALLATION INSTRUCTIONS.
6) ALL FASTENERS TO BE CORROSION RESISTANT.
7) INSTALLATION ANCHORS SHALL BE INSTALLED IN ACCORDANCE WITH ANCHOR MANUFACTURER'S INSTALLATION INSTRUCTIONS, AND ANCHORS SHALL NOT BE USED IN SUBSTRATES WITH STRENGTHS LESS THAN THE MINIMUM STRENGTH SPECIFIED BELOW:
A. WOOD – MINIMUM SPECIFIC GRAVITY OF G=0.42
B. CONCRETE – MINIMUM COMPRESSIVE STRENGTH OF 3,200 PSI.
C. METAL – STEEL 18GA (.048") FY=33KSI/FU=52KSI OR ALUMINUM 6063-T5 FU=30KSI .0625" THICK MINIMUM.

SIGNED: 10/17/2017

MI WINDOWS AND DOORS, LLC
650 WEST MARKET STREET
GRATZ, PA 17030-0370
M-1926 HORIZONTAL MULLION
SINGLE, TWIN AND TRIPLE WITH TRANSOM
INSTALLATION DETAILS
DRAWN: V.L. DWG NO. 08-01455 REV B
SCALE NTS DATE 03/06/12 SHEET 3 OF 3
L. ROBERTO LOMAS P.E.
1432 WOODFORD RD LEWISVILLE, NC 27023
434-688-0609 rllomas@lrlomaspe.com
Luis R. Lomas P.E.
FL No.: 62514

M-2300 – HORIZONTAL MULLION IMPACT — NOTES

REVISIONS			
REV	DESCRIPTION	DATE	APPROVED
A	REVISED ANCHORING NOTES	06/05/17	R.L.

NOTES:
1) THE PRODUCT SHOWN HEREIN IS DESIGNED AND MANUFACTURED TO COMPLY WITH REQUIREMENTS OF THE FLORIDA BUILDING CODE.
2) WOOD FRAMING TO BE DESIGNED AND ANCHORED TO PROPERLY TRANSFER ALL LOADS TO STRUCTURE. FRAMING IS THE RESPONSIBILITY OF THE ARCHITECT OR ENGINEER OF RECORD.
3) ALLOWABLE STRESS INCREASE OF 1/3 WAS NOT USED IN THE DESIGN OF THE PRODUCT SHOWN HEREIN. WIND LOAD DURATION FACTOR Cd=1.6 WAS USED FOR WOOD ANCHOR CALCULATIONS.
4) APPROVED IMPACT PROTECTIVE SYSTEM IS NOT REQUIRED FOR THIS PRODUCT IN WIND BORNE DEBRIS REGIONS UP TO WIND ZONE 3.
5) DESIGN PRESSURE AND INSTALLATION DETAILS SHOWN IN THIS DOCUMENT APPLY ONLY TO MULLION. WINDOWS MUST BE APPROVED UNDER SEPARATE APPROVAL.
6) SINGLE WINDOWS TO BE MULLED ARE NOT LIMITED TO THOSE SHOWN IN THIS DRAWING. WINDOWS MUST BE MANUFACTURED BY MI WINDOWS AND DOORS, INC.
7) DESIGN PRESSURE OF MULLED UNIT SHALL BE CONTROLLED BY THE LESSER DESIGN PRESSURE OF THE MULLION OR THE INDIVIDUAL WINDOW OR DOOR UNIT.
8) UNITS MAY BE MULLED TOGETHER INDEFINITELY AS LONG AS SINGLE UNIT WIDTH AND HEIGHT ARE NOT EXCEEDED AND MULLION IS ANCHORED AS SHOWN HEREIN.
9) MULLION VERTICAL INSTALLATION IS SHOWN, MULLION MAY BE USED IN HORIZONTAL APPLICATIONS AS LONG AS DIMENSIONS INDICATED HEREIN ARE NOT EXCEEDED AND MULLION IS ANCHORED ACCORDING TO THIS DOCUMENT.

ANCHORING NOTES:
1) FOR ANCHORING INTO WOOD FRAMING OR 2X BUCK USE #12 WOOD SCREW WITH SUFFICIENT LENGTH TO ACHIEVE A 1 3/8" MINIMUM EMBEDMENT. LOCATE ANCHORS AS SHOWN IN INSTALLATION DETAILS SHEET 3.
2) FOR ANCHORING INTO CONCRETE USE 1/4" ELCO ULTRACON TAPCON WITH SUFFICIENT LENGTH TO ACHIEVE A 1 1/4" MINIMUM EMBEDMENT WITH 1" MINIMUM EDGE DISTANCE. LOCATE ANCHORS AS SHOWN IN INSTALLATION DETAILS SHEET 4.
3) FOR ANCHORING THROUGH FRAME INTO METAL STRUCTURE USE #12 SMS OR SELF DRILLING SCREWS WITH SUFFICIENT LENGTH TO ACHIEVE 3 THREADS MINIMUM BEYOND STRUCTURE INTERIOR WALL. LOCATE ANCHORS AS SHOWN IN ELEVATIONS AND INSTALLATION DETAILS.
4) FOR ATTACHING WINDOW UNITS TO MULLION USE #10 SELF TAPPING SCREWS WITH SUFFICIENT LENGTH TO ACHIEVE A MINIMUM EMBEDMENT OF THREE THREADS PAST THE MULLION WALL. LOCATE SCREWS 6" FROM EACH MULLION END AND 12" MAX. O.C. THEREAFTER. STAGGER SCREWS AT EACH WINDOW.
5) ALL FASTENERS TO BE CORROSION RESISTANT.
6) INSTALLATION ANCHORS SHALL BE INSTALLED IN ACCORDANCE WITH ANCHOR MANUFACTURER'S INSTALLATION INSTRUCTIONS, AND ANCHORS SHALL NOT BE USED IN SUBSTRATES WITH STRENGTHS LESS THAN THE MINIMUM STRENGTH SPECIFIED BELOW:
A. WOOD – MINIMUM SPECIFIC GRAVITY OF G=0.42
B. CONCRETE – MINIMUM COMPRESSIVE STRENGTH OF 5,200 PSI.
C. MASONRY – STRENGTH CONFORMANCE TO ASTM C-90, GRADE N, TYPE 1 (OR GREATER).
D. METAL STRUCTURE: STEEL 18GA (.048") FY=33KSI/FU=52KSI OR ALUMINUM 6063-T5 FU=30KSI .0625 THICK MINIMUM.

TABLE OF CONTENTS

SHEET NO.	DESCRIPTION
1	NOTES
2 – 5	CONFIGURATIONS AND DP CHART
6	INSTALLATION DETAILS
7	COMPONENTS

SIGNED: 10/17/2017

MI WINDOWS AND DOORS, LLC.
650 WEST MARKET STREET
GRATZ, PA 17030-0370
M-2300 – HORIZONTAL MULLION
IMPACT
NOTES
DRAWN: V.L. DWG NO. 08-01907 REV A
SCALE NTS DATE 10/20/15 SHEET 1 OF 7
L. ROBERTO LOMAS P.E.
1432 WOODFORD RD LEWISVILLE, NC 27023
434-688-0609 rllomas@lrlomaspe.com
Luis R. Lomas P.E.
FL No.: 62514

MULLIONS INSTALLED WITH MT000022 CLIP

REVISIONS			
REV	DESCRIPTION	DATE	APPROVED
A	REVISED ANCHORING NOTES	06/05/17	R.L.

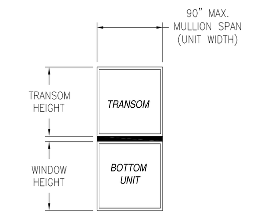

CHART 1
Maximum design pressure capacity chart (psf)
Units with a transom height of: 18"
Design pressures are positive and negative

Height (in) Window	Transom	Unit width (in) 18.0	24.0	30.0	36.0	42.0	48.0	54.0	60.0
24.0	18.0	120.0	120.0	120.0	120.0	120.0	120.0	120.0	120.0
30.0	18.0	120.0	120.0	120.0	120.0	120.0	120.0	120.0	114.3
36.0	18.0	120.0	120.0	120.0	120.0	120.0	120.0	120.0	106.7
42.0	18.0	120.0	120.0	120.0	120.0	120.0	120.0	118.0	101.4
48.0	18.0	120.0	120.0	120.0	120.0	120.0	120.0	115.2	98.0
54.0	18.0	120.0	120.0	120.0	120.0	120.0	120.0	114.3	96.0
60.0	18.0	120.0	120.0	120.0	120.0	120.0	120.0	114.3	95.4
66.0	18.0	120.0	120.0	120.0	120.0	120.0	120.0	114.3	95.4
72.0	18.0	120.0	120.0	120.0	120.0	120.0	120.0	114.3	95.4
78.0	18.0	120.0	120.0	120.0	120.0	120.0	120.0	114.3	95.4
84.0	18.0	120.0	120.0	120.0	120.0	120.0	120.0	114.3	95.4

IMPACT RATED UP TO WIND ZONE 3

CHART 2
Maximum design pressure capacity chart (psf)
Units with a transom height of: 24"
Design pressures are positive and negative

Height (in) Window	Transom	Unit width (in) 18.0	24.0	30.0	36.0	42.0	48.0	54.0	60.0
24.0	24.0	120.0	120.0	120.0	120.0	120.0	120.0	120.0	112.5
30.0	24.0	120.0	120.0	120.0	120.0	120.0	120.0	119.0	103.6
36.0	24.0	120.0	120.0	120.0	120.0	120.0	120.0	112.5	97.3
42.0	24.0	120.0	120.0	120.0	120.0	120.0	120.0	108.3	92.9
48.0	24.0	120.0	120.0	120.0	120.0	120.0	120.0	105.9	90.0
54.0	24.0	120.0	120.0	120.0	120.0	120.0	120.0	105.1	88.3
60.0	24.0	120.0	120.0	120.0	120.0	120.0	120.0	105.1	87.8
66.0	24.0	120.0	120.0	120.0	120.0	120.0	120.0	105.1	87.8
72.0	24.0	120.0	120.0	120.0	120.0	120.0	120.0	105.1	87.8
78.0	24.0	120.0	120.0	120.0	120.0	120.0	120.0	105.1	87.8
84.0	24.0	120.0	120.0	120.0	120.0	120.0	120.0	105.1	87.8

IMPACT RATED UP TO WIND ZONE 3

CHART 3
Maximum design pressure capacity chart (psf)
Units with a transom height of: 36"
Design pressures are positive and negative

Height (in) Window	Transom	Unit width (in) 18.0	24.0	30.0	36.0	42.0	48.0	54.0	60.0
24.0	36.0	120.0	120.0	120.0	120.0	120.0	120.0	112.5	97.3
30.0	36.0	120.0	120.0	120.0	120.0	120.0	120.0	105.1	90.6
36.0	36.0	120.0	120.0	120.0	120.0	120.0	120.0	100.0	85.7
42.0	36.0	120.0	120.0	120.0	120.0	120.0	117.1	96.6	82.3
48.0	36.0	120.0	120.0	120.0	120.0	120.0	116.1	94.7	80.0
54.0	36.0	120.0	120.0	120.0	120.0	120.0	116.1	94.1	78.7
60.0	36.0	120.0	120.0	120.0	120.0	120.0	116.1	94.1	78.3
66.0	36.0	120.0	120.0	120.0	120.0	120.0	116.1	94.1	78.3
72.0	36.0	120.0	120.0	120.0	120.0	120.0	116.1	94.1	78.3
78.0	36.0	120.0	120.0	120.0	120.0	120.0	116.1	94.1	78.3
84.0	36.0	120.0	120.0	120.0	120.0	120.0	116.1	94.1	78.3

IMPACT RATED UP TO WIND ZONE 3

CHART 4
Maximum design pressure capacity chart (psf)
Units with a transom height of: 48"
Design pressures are positive and negative

Height (in) Window	Transom	Unit width (in) 18.0	24.0	30.0	36.0	42.0	48.0	54.0	60.0
24.0	48.0	120.0	120.0	120.0	120.0	120.0	120.0	105.9	90.0
30.0	48.0	120.0	120.0	120.0	120.0	120.0	120.0	99.3	84.2
36.0	48.0	120.0	120.0	120.0	120.0	120.0	116.1	94.7	80.0
42.0	48.0	120.0	120.0	120.0	120.0	120.0	113.4	91.7	77.0
48.0	48.0	120.0	120.0	120.0	120.0	120.0	112.5	90.0	75.0
54.0	48.0	120.0	120.0	120.0	120.0	120.0	112.5	89.4	73.8
60.0	48.0	120.0	120.0	120.0	120.0	120.0	112.5	89.4	73.5
66.0	48.0	120.0	120.0	120.0	120.0	120.0	112.5	89.4	73.5
72.0	48.0	120.0	120.0	120.0	120.0	120.0	112.5	89.4	73.5
78.0	48.0	120.0	120.0	120.0	120.0	120.0	112.5	89.4	73.5
84.0	48.0	120.0	120.0	120.0	120.0	120.0	112.5	89.4	73.5

IMPACT RATED UP TO WIND ZONE 3

DESIGN PRESSURE TABLE INSTRUCTIONS:
1. DEFINE REQUIRED DESIGN LOAD PER FLORIDA BUILDING CODE CHAPTER 16.
2. DETERMINE UNIT WIDTH (MULLION SPAN) BASED ON PRODUCT TO BE INSTALLED.
3. TO DETERMINE MULLION RATING LOCATE UNIT WIDTH COLUMN AND WINDOW UNIT HEIGHT ROW. RATING FOR MULLION IS LOCATED AT INTERSECTION OF COLUMN (UNIT WIDTH) AND ROW (WINDOW UNIT HEIGHT).
4. MULLION RATING MUST BE EQUAL OR GREATER THAN REQUIRED DESIGN PRESSURE OBTAINED IN STEP 1.
5. IF TRANSOM TO BE INSTALLED IS NOT LISTED IN THESE CHARTS GO TO NEXT HIGHER TRANSOM CHART. FOR EXAMPLE IF TRANSOM TO BE INSTALLED IS 20" HIGH THEN USE CHART FOR 24" TRANSOM.
6. WINDOW/DOOR AND TRANSOMS TO BE ANCHORED ON ALL FOUR SIDES.

SIGNED: 10/17/2017

MI WINDOWS AND DOORS, LLC.
650 WEST MARKET STREET
GRATZ, PA 17030-0370
M-2300 – HORIZONTAL MULLION
IMPACT
CONFIGURATIONS AND DP CHARTS
DRAWN: V.L. DWG NO. 08-01907 REV A
SCALE NTS DATE 10/20/15 SHEET 2 OF 7
L. ROBERTO LOMAS P.E.
1432 WOODFORD RD LEWISVILLE, NC 27023
434-688-0609 rllomas@lrlomaspe.com
Luis R. Lomas P.E.
FL No.: 62514

M-2300 – HORIZONTAL MULLION IMPACT — INSTALLATION DETAILS

REVISIONS			
REV	DESCRIPTION	DATE	APPROVED
A	REVISED ANCHORING NOTES	06/05/17	R.L.

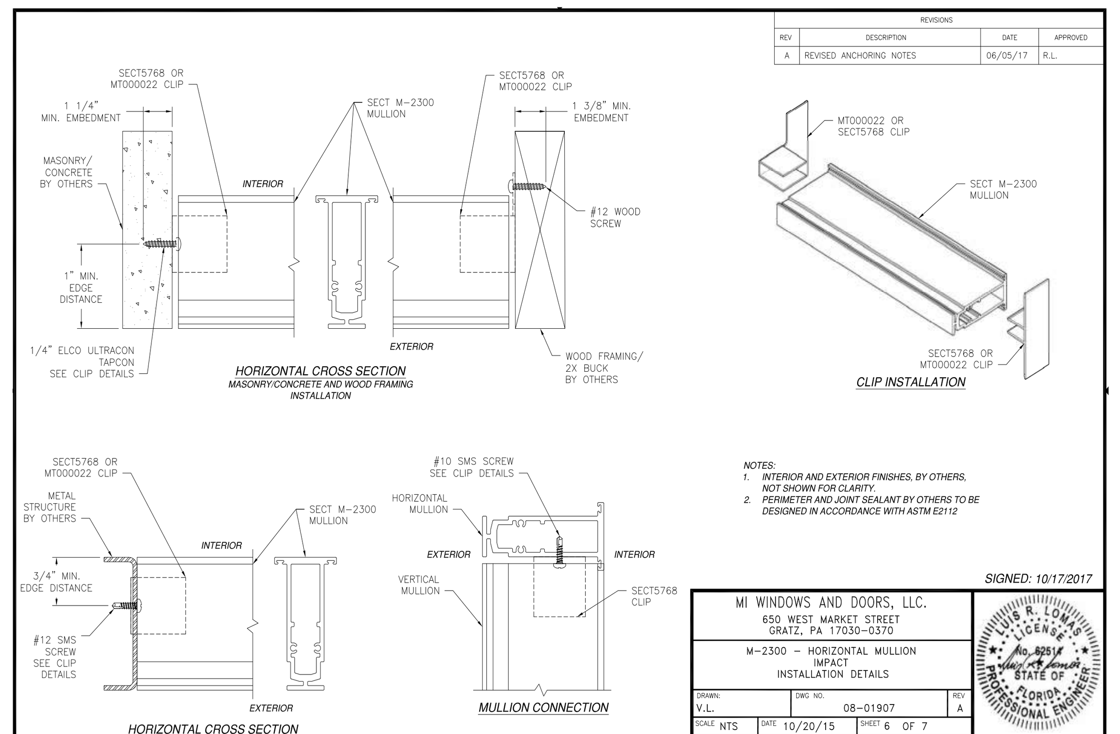

NOTES:
1. INTERIOR AND EXTERIOR FINISHES, BY OTHERS, NOT SHOWN FOR CLARITY.
2. PERIMETER AND JOINT SEALANT BY OTHERS TO BE DESIGNED IN ACCORDANCE WITH ASTM E2112

SIGNED: 10/17/2017

MI WINDOWS AND DOORS, LLC.
650 WEST MARKET STREET
GRATZ, PA 17030-0370
M-2300 – HORIZONTAL MULLION
IMPACT
INSTALLATION DETAILS
DRAWN: V.L. DWG NO. 08-01907 REV A
SCALE NTS DATE 10/20/15 SHEET 6 OF 7
L. ROBERTO LOMAS P.E.
1432 WOODFORD RD LEWISVILLE, NC 27023
434-688-0609 rllomas@lrlomaspe.com
Luis R. Lomas P.E.
FL No.: 62514

M-2300 – HORIZONTAL MULLION IMPACT — COMPONENTS

REVISIONS			
REV	DESCRIPTION	DATE	APPROVED
A	REVISED ANCHORING NOTES	06/05/17	R.L.

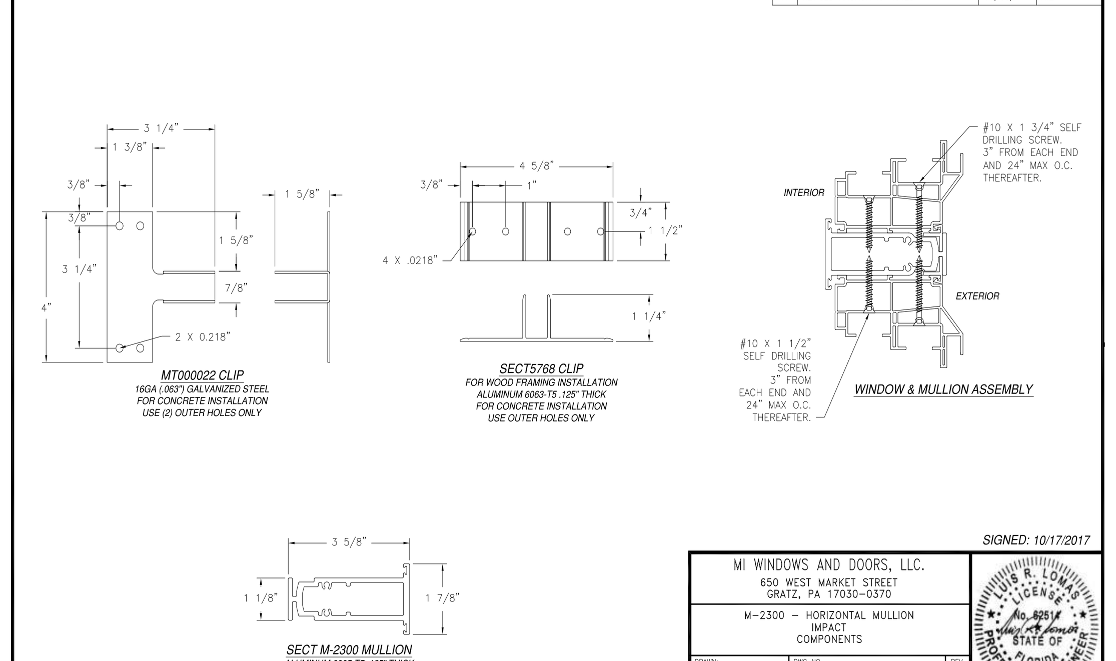

SIGNED: 10/17/2017

MI WINDOWS AND DOORS, LLC.
650 WEST MARKET STREET
GRATZ, PA 17030-0370
M-2300 – HORIZONTAL MULLION
IMPACT
COMPONENTS
DRAWN: V.L. DWG NO. 08-01907 REV A
SCALE NTS DATE 10/20/15 SHEET 7 OF 7
L. ROBERTO LOMAS P.E.
1432 WOODFORD RD LEWISVILLE, NC 27023
434-688-0609 rllomas@lrlomaspe.com
Luis R. Lomas P.E.
FL No.: 62514

M-2300 – VERTICAL MULLION 84" MULLION SPAN — GENERAL NOTES

REVISIONS			
REV	DESCRIPTION	DATE	APPROVED
A	REVISED INSTALLATION DETAILS	10/20/15	R.L.
B	REVISED ANCHORING NOTES	06/07/17	R.L.

NOTES:
1. THE PRODUCT SHOWN HEREIN IS DESIGNED AND MANUFACTURED TO COMPLY WITH REQUIREMENTS OF THE FLORIDA BUILDING CODE.
2. WOOD FRAMING TO BE DESIGNED AND ANCHORED TO PROPERLY TRANSFER ALL LOADS TO STRUCTURE. FRAMING IS THE RESPONSIBILITY OF THE ARCHITECT OR ENGINEER OF RECORD.
3. ALLOWABLE STRESS INCREASE OF 1/3 WAS NOT USED IN THE DESIGN OF THE PRODUCT SHOWN HEREIN. WIND LOAD DURATION FACTOR Cd=1.6 WAS USED FOR WOOD ANCHOR CALCULATIONS.
4. APPROVED IMPACT PROTECTIVE SYSTEM IS NOT REQUIRED FOR THIS PRODUCT IN WIND BORNE DEBRIS REGIONS UP TO WIND ZONE 3.
5. DESIGN PRESSURE AND INSTALLATION DETAILS SHOWN IN THIS DOCUMENT APPLY ONLY TO MULLION. WINDOWS MUST BE APPROVED UNDER SEPARATE APPROVAL.
6. SINGLE WINDOWS TO BE MULLED ARE NOT LIMITED TO THOSE SHOWN IN THIS DRAWING. WINDOWS MUST BE MANUFACTURED BY MI WINDOWS AND DOORS, INC.
7. DESIGN PRESSURE OF MULLED UNIT SHALL BE CONTROLLED BY THE LESSER DESIGN PRESSURE OF THE MULLION OR THE INDIVIDUAL WINDOW OR DOOR UNIT.
8. UNITS MAY BE MULLED TOGETHER INDEFINITELY AS LONG AS SINGLE UNIT WIDTH AND HEIGHT ARE NOT EXCEEDED AND MULLION IS ANCHORED AS SHOWN HEREIN.
9. MULLION VERTICAL INSTALLATION IS SHOWN, MULLION MAY BE USED IN HORIZONTAL APPLICATIONS AS LONG AS DIMENSIONS INDICATED HEREIN ARE NOT EXCEEDED AND MULLION IS ANCHORED ACCORDING TO THIS DOCUMENT.

ANCHORING NOTES:
1. FOR ANCHORING INTO WOOD FRAMING OR 2X BUCK USE #10 WOOD SCREW WITH SUFFICIENT LENGTH TO ACHIEVE A 1 3/8" MINIMUM EMBEDMENT. LOCATE ANCHORS AS SHOWN IN INSTALLATION DETAILS
2. FOR ANCHORING INTO CONCRETE USE 1/4" ELCO ULTRACON TAPCON WITH SUFFICIENT LENGTH TO ACHIEVE A 1 1/4" MINIMUM EMBEDMENT WITH 1" MINIMUM EDGE DISTANCE. LOCATE ANCHORS AS SHOWN IN INSTALLATION DETAILS.
3. FOR ANCHORING THROUGH FRAME INTO METAL STRUCTURE USE #10 SMS OR SELF DRILLING SCREWS WITH SUFFICIENT LENGTH TO ACHIEVE 3 THREADS MINIMUM BEYOND STRUCTURE INTERIOR WALL. LOCATE ANCHORS AS SHOWN IN ELEVATIONS AND INSTALLATION DETAILS.
4. FOR ATTACHING WINDOW UNITS TO MULLION USE #10 SELF TAPPING SCREWS WITH SUFFICIENT LENGTH TO ACHIEVE A MINIMUM EMBEDMENT OF THREE THREADS PAST THE MULLION WALL. LOCATE SCREWS 6" FROM EACH MULLION END AND 12" MAX. O.C. THEREAFTER. STAGGER SCREWS AT EACH WINDOW.
5. ALL FASTENERS TO BE CORROSION RESISTANT.
6. INSTALLATION ANCHORS SHALL BE INSTALLED IN ACCORDANCE WITH ANCHOR MANUFACTURER'S INSTALLATION INSTRUCTIONS, AND ANCHORS SHALL NOT BE USED IN SUBSTRATES WITH STRENGTHS LESS THAN THE MINIMUM STRENGTH SPECIFIED BELOW:
A. WOOD – MINIMUM SPECIFIC GRAVITY OF G=0.42
B. CONCRETE – MINIMUM COMPRESSIVE STRENGTH OF 4,200 PSI.
C. MASONRY – STRENGTH CONFORMANCE TO ASTM C-90, GRADE N, TYPE 1 (OR GREATER).
D. METAL STRUCTURE: STEEL 18GA (.048") FY=33KSI/FU=52KSI OR ALUMINUM 6063-T5 FU=30KSI .062" THICK MINIMUM

TABLE OF CONTENTS

SHEET NO.	DESCRIPTION
1	NOTES
2	CONFIGURATIONS AND DP CHART
3 – 4	INSTALLATION DETAILS

SIGNED: 10/16/2017

MI WINDOWS AND DOORS
650 WEST MARKET STREET
GRATZ, PA 17030-0370
M-2300 – VERTICAL MULLION
84" MULLION SPAN
GENERAL NOTES
DRAWN: V.L. DWG NO. 08-01906 REV B
SCALE NTS DATE 01/29/13 SHEET 1 OF 4
L. ROBERTO LOMAS P.E.
1432 WOODFORD RD LEWISVILLE, NC 27023
434-688-0609 rllomas@lrlomaspe.com
Luis R. Lomas P.E.
FL No.: 62514

M-2300 – VERTICAL MULLION 84" MULLION SPAN — CONFIGURATIONS AND DP CHARTS

REVISIONS			
REV	DESCRIPTION	DATE	APPROVED
A	REVISED INSTALLATION DETAILS	10/20/15	R.L.
B	REVISED ANCHORING NOTES	06/07/17	R.L.

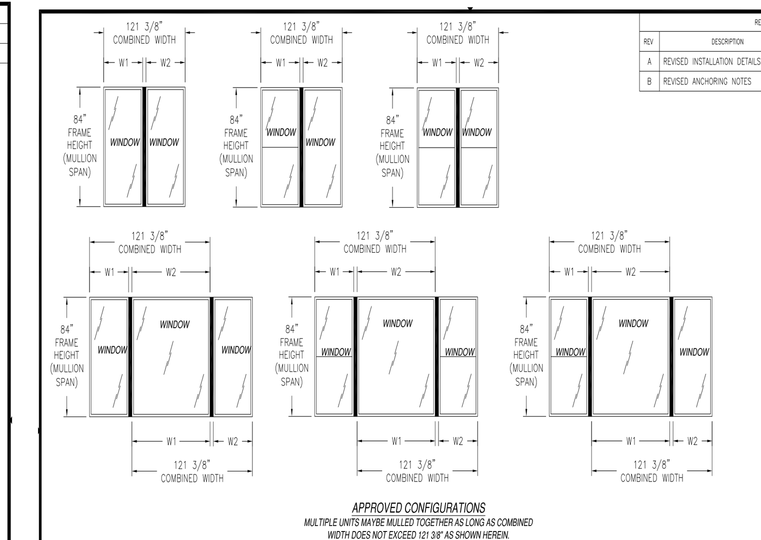

APPROVED CONFIGURATIONS
MULTIPLE UNITS MAYBE MULLED TOGETHER AS LONG AS COMBINED WIDTH DOES NOT EXCEED 121 3/8" AS SHOWN HEREIN.

Design pressure rating (psf)

Mullion span (in)	Tributary width (in) 24.00	30.00	36.00	42.00	48.00	54.00	60.00
24.00	120.0	120.0	120.0	120.0	120.0	120.0	120.0
30.00	120.0	120.0	120.0	120.0	120.0	120.0	120.0
36.00	120.0	120.0	120.0	120.0	120.0	120.0	120.0
42.00	120.0	120.0	120.0	120.0	120.0	120.0	120.0
48.00	120.0	120.0	120.0	120.0	114.3	112.5	112.5
54.00	120.0	110.8	100.0	93.5	90.0	88.9	88.9
60.00	112.5	96.0	85.7	79.1	75.0	72.7	72.0
66.00	100.0	84.7	75.0	68.6	64.3	61.5	60.0
72.00	90.0	75.8	66.7	60.5	56.3	53.3	51.4
78.00	81.8	68.6	60.0	54.1	50.0	47.1	45.0
84.00	75.0	62.6	54.5	49.0	45.0	42.1	40.0

LARGE & SMALL MISSILE IMPACT, LEVEL D, WIND ZONE 3

DIMENSIONS IN CHART ARE FRAME DIMENSIONS AND DO NOT INCLUDE FLANGE

DESIGN PRESSURE TABLE INSTRUCTIONS:
1) DEFINE REQUIRED DESIGN LOAD PER FLORIDA BUILDING CODE CHAPTER 16.
2) DETERMINE TRIBUTARY WIDTH AND MULLION SPAN BASED ON PRODUCT TO BE INSTALLED. SEE FORMULA FOR TRIBUTARY WIDTH.
3) LOCATE MULLION SPAN (UNIT HEIGHT) AND TRIBUTARY WIDTH. AT THE INTERSECTION OF ROW AND COLUMN CONTAINING THE MULLION SPAN AND TRIBUTARY WIDTH RESPECTIVELY IS THE MULLION RATING FOR PRODUCT IN STEP 2.
MULLION RATING MUST BE EQUAL OR GREATER THAN REQUIRED DESIGN PRESSURE OBTAINED IN STEP 1.

$$\text{TRIBUTARY WIDTH} = \frac{W1 + W2}{2}$$

SIGNED: 10/16/2017

MI WINDOWS AND DOORS
650 WEST MARKET STREET
GRATZ, PA 17030-0370
M-2300 – VERTICAL MULLION
84" MULLION SPAN
CONFIGURATIONS AND DP CHARTS
DRAWN: V.L. DWG NO. 08-01906 REV B
SCALE NTS DATE 01/29/13 SHEET 2 OF 4
L. ROBERTO LOMAS P.E.
1432 WOODFORD RD LEWISVILLE, NC 27023
434-688-0609 rllomas@lrlomaspe.com
Luis R. Lomas P.E.
FL No.: 62514

M-2300 – VERTICAL MULLION 84" MULLION SPAN — INSTALLATION DETAILS

REVISIONS			
REV	DESCRIPTION	DATE	APPROVED
A	REVISED INSTALLATION DETAILS	10/20/15	R.L.
B	REVISED ANCHORING NOTES	06/07/17	R.L.

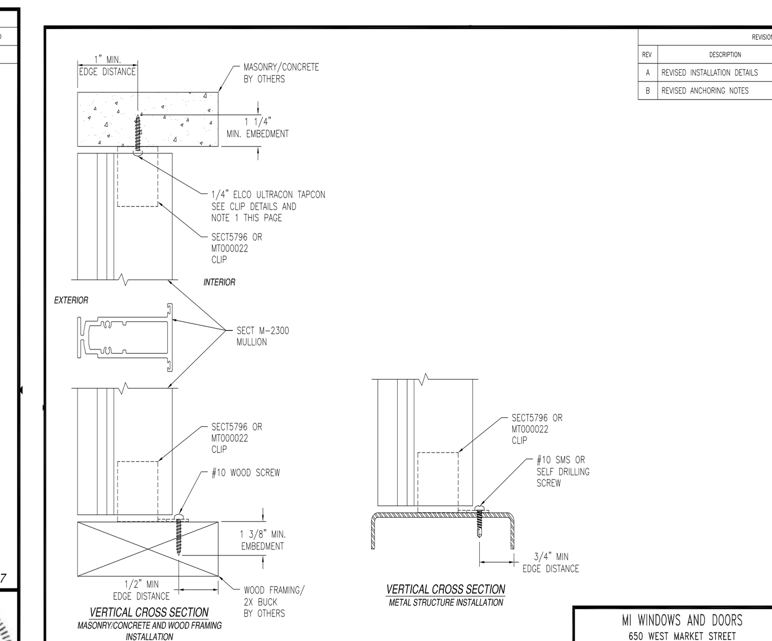

NOTE:
1. WHEN INSTALLING INTO MASONRY/CONCRETE USE ONLY (2) ANCHORS PER CLIP. LOCATE ANCHORS IN CLIP MOST OUTER HOLES.

SIGNED: 10/16/2017

MI WINDOWS AND DOORS
650 WEST MARKET STREET
GRATZ, PA 17030-0370
M-2300 – VERTICAL MULLION
84" MULLION SPAN
INSTALLATION DETAILS
DRAWN: V.L. DWG NO. 08-01906 REV B
SCALE NTS DATE 01/29/13 SHEET 3 OF 4
L. ROBERTO LOMAS P.E.
1432 WOODFORD RD LEWISVILLE, NC 27023
434-688-0609 rllomas@lrlomaspe.com
Luis R. Lomas P.E.
FL No.: 62514

M-2300 – VERTICAL MULLION 84" MULLION SPAN — INSTALLATION DETAILS

REVISIONS			
REV	DESCRIPTION	DATE	APPROVED
A	REVISED INSTALLATION DETAILS	10/20/15	R.L.
B	REVISED ANCHORING NOTES	06/07/17	R.L.

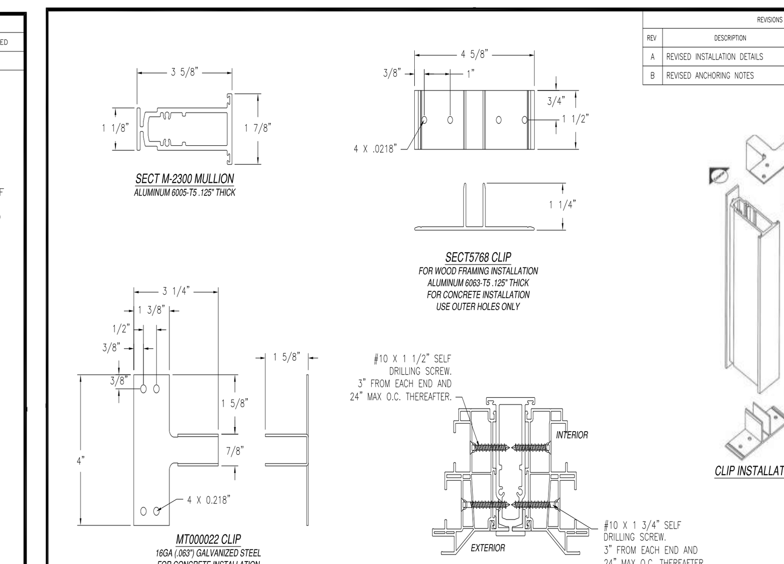

SIGNED: 10/16/2017

MI WINDOWS AND DOORS
650 WEST MARKET STREET
GRATZ, PA 17030-0370
M-2300 – VERTICAL MULLION
84" MULLION SPAN
INSTALLATION DETAILS
DRAWN: V.L. DWG NO. 08-01906 REV B
SCALE NTS DATE 01/29/13 SHEET 4 OF 4
L. ROBERTO LOMAS P.E.
1432 WOODFORD RD LEWISVILLE, NC 27023
434-688-0609 rllomas@lrlomaspe.com
Luis R. Lomas P.E.
FL No.: 62514

PRODUCT REL. DATE
1-1-24 Revised to 2023 8th Edition Codes
REVISIONS : 1 2 3 4 5 6 7 8

Maronda Homes
4005 MARONDA WAY
SANFORD, FL 32771
(407) 321-0064

FLORIDA:
THIS STRUCTURE WAS DESIGNED IN ACCORDANCE AND MEETS THE REQUIREMENTS OF SECTION R301 OF THE FLORIDA BUILDING CODE 8th EDITION (2023) : RESIDENTIAL. ALL CONNECTORS HAVE BEEN CHECK'D TO WITHSTAND ALL APPLICABLE LOADS AND DESIGN CRITERIA STATED ON THE COVER SHEET.

DESIGNED WIND SPEED
Vult = 160 MPH
Vasd = 124 MPH

Manufacture
MI Windows
Mullion
DRAWN BY:
GARAGE:
RELEASE DATE: JULY 6, 2015

SHEET:
WIN-M1

COPYRIGHT © 2012 MARONDA HOMES

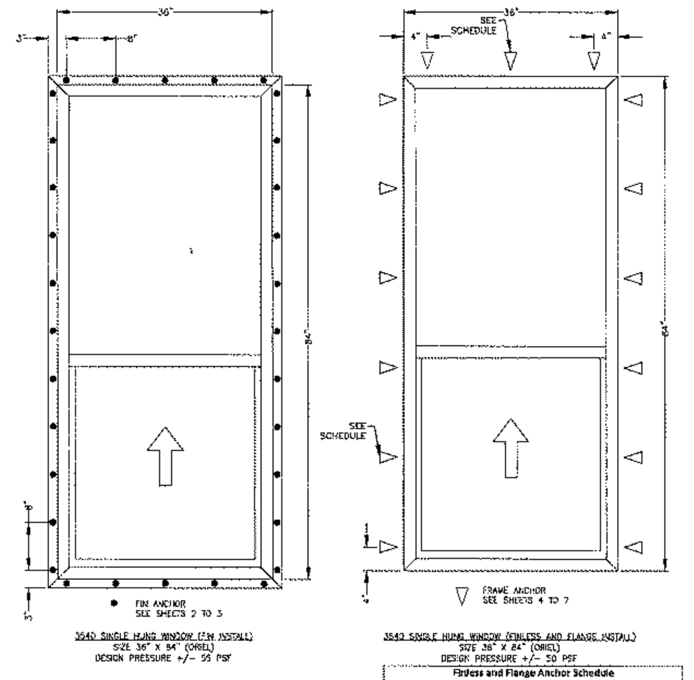

3540 SINGLE HUNG WINDOW (FIN INSTALL)
SIZE 36" X 84" (OREL)
DESIGN PRESSURE +/- 55 PSF

3540 SINGLE HUNG WINDOW (FINLESS AND FLANGE INSTALL)
SIZE 36" X 84" (OREL)
DESIGN PRESSURE +/- 50 PSF

Finless and Flange Anchor Schedule

Window Height (inch)	Jamb Anchors	Head Anchors Window Width (inch) 0 to 30	Head Anchors Window Width (inch) 30-1/8 to 52-1/8
0 to 30	2	2	3
30-1/8 to 42	3	2	3
42-1/8 to 54	4	2	3
54-1/8 to 66	5	2	3
66-1/8 to 84	6	2	3

NOTES:
1. Products and installations depicted satisfy the requirements of the Florida Building Code, Building 8th Edition (2023) for design wind pressures and overall sizes noted.
2. Wood bucks, wood framing, steel stud framing, concrete and concrete masonry are by others and shall be designed by the architect or engineer of record to resist the loads imparted to them.
3. Wood buck strips and wood frames are assumed S-P-F (G=0.42) or denser. Buck width shall be greater than the window frame width. Tapered or partial width buck strips are not allowed.
4. Concrete masonry installations are assumed at least ASTM C90 normal weight hollow masonry units with a 1-1/4" wall thickness or normal weight concrete with a minimum compressive strength of f'c = 3,000 psi.
5. Metal stud frames are assumed to be a minimum 18 gauge 33 KSI steel.
6. Wood screws shall be corrosion resistant and meet the requirements of ANSI/ASME B18.6.1
7. Tapcon masonry anchors shall have a minimum embedment of 1-1/2" or full penetration of concrete masonry unit shell. They shall also have a minimum of 2" edge distance. Install concrete masonry anchors per manufacturer's installation instructions.
8. TEKS screws shall be corrosion resistant and shall be ASTM A510 Grade 1018 or equivalent.
9. Maximum permitted shim thickness is 1/4". Shims shall be non-compressible and load bearing type. Every through-frame fastener shall have a shim.
10. Products are not impact resistant and require approved protection devices if used in wind-borne debris regions.
11. Not for use in High Velocity Hurricane Zone (HVHZ).

CONTENTS:

Sheet 1	Elevations and Notes
Sheet 2	Fin Install to Wood
Sheet 3	Fin Install to Steel Stud
Sheet 4	Finless Install to Wood
Sheet 5	Finless Install to Steel Stud
Sheets 6–7	Finless Install to Concrete or CMU
Sheet 8	Flange Install to Wood
Sheet 9	Flange Install to Steel Stud
Sheets 10–11	Flange Install to Concrete or CMU

2023.12.11 12:12:44 -05'00'

3540 Single Hung - non Impact
Elevations and Notes
MI Windows and Doors
702 W. Market St.
Gratz, PA 17030
Drawing No.: 27488.06-1001
Project No.: 27488.06-107-16
Drawn By: MDS Rev: - Date:12/11/23
Scale: NTS | Sheet 1 of 11

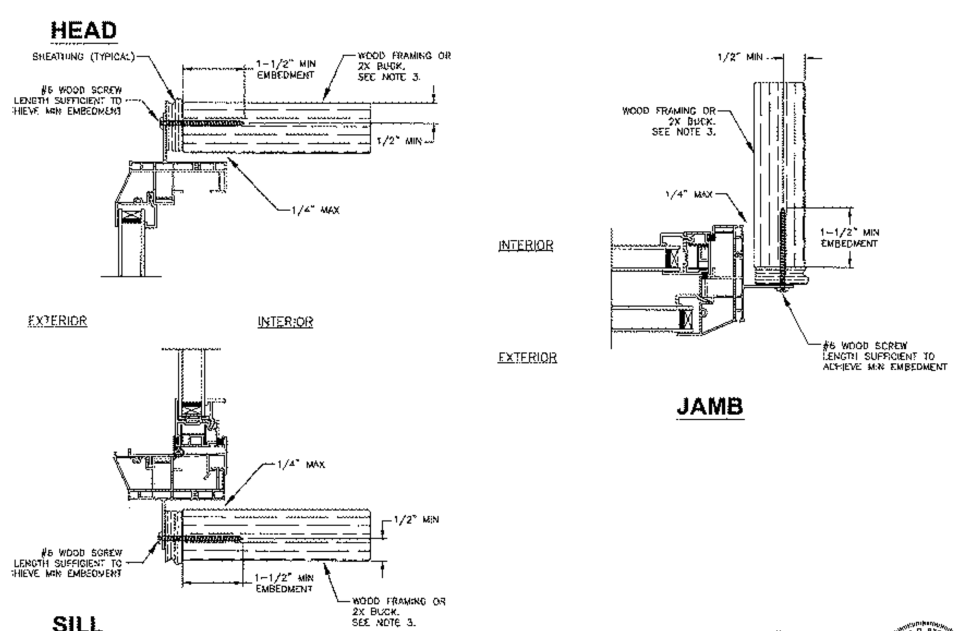

Note:
Waterproofing and interior finishes by others. Not shown for clarity.

3540 Single Hung - non Impact
Fin Install to Wood
MI Windows and Doors
702 W. Market St.
Gratz, PA 17030
Drawing No.: 27488.06-1001
Project No.: 27488.06-107-16
Drawn By: MDS Rev: - Date:12/11/23
Scale: NTS | Sheet 2 of 11

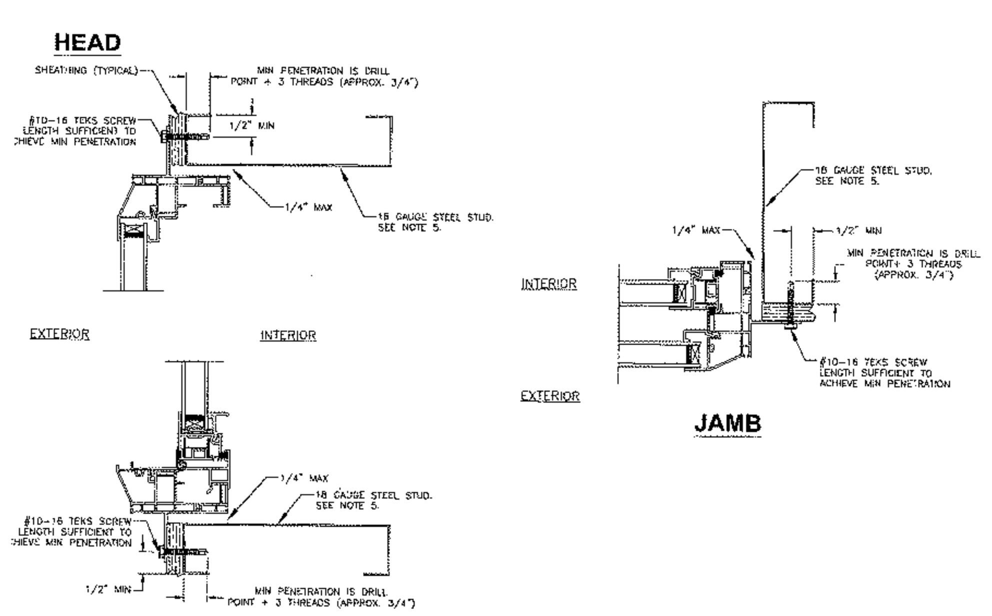

Note:
Waterproofing and interior finishes by others. Not shown for clarity.

3540 Single Hung - non Impact
Fin Install to Steel Stud
MI Windows and Doors
702 W. Market St.
Gratz, PA 17030
Drawing No.: 27488.06-1001
Project No.: 27488.06-107-16
Drawn By: MDS Rev: - Date:12/11/23
Scale: NTS | Sheet 3 of 11

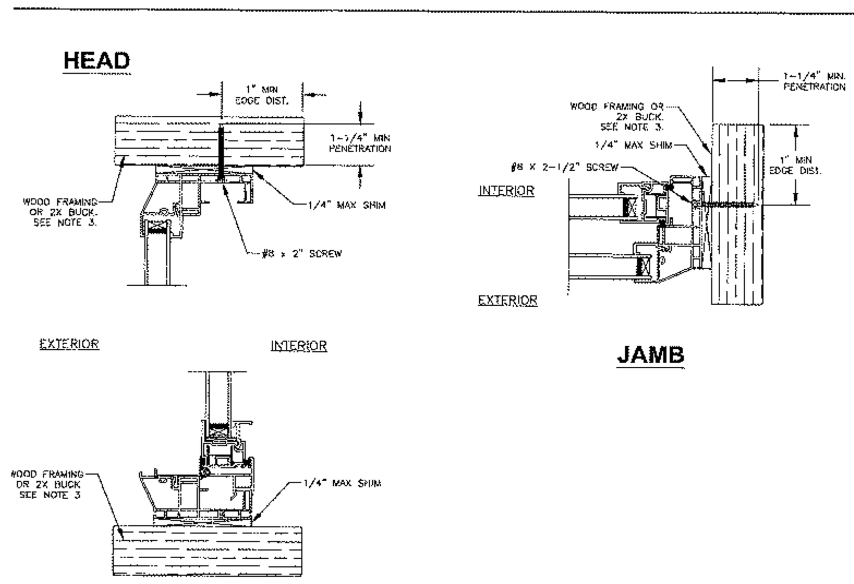

Note:
Waterproofing and interior finishes by others. Not shown for clarity.

3540 Single Hung - non Impact
Finless Install to Wood
MI Windows and Doors
702 W. Market St.
Gratz, PA 17030
Drawing No.: 27488.06-1001
Project No.: 27488.06-107-16
Drawn By: MDS Rev: - Date:12/11/23
Scale: NTS | Sheet 4 of 11

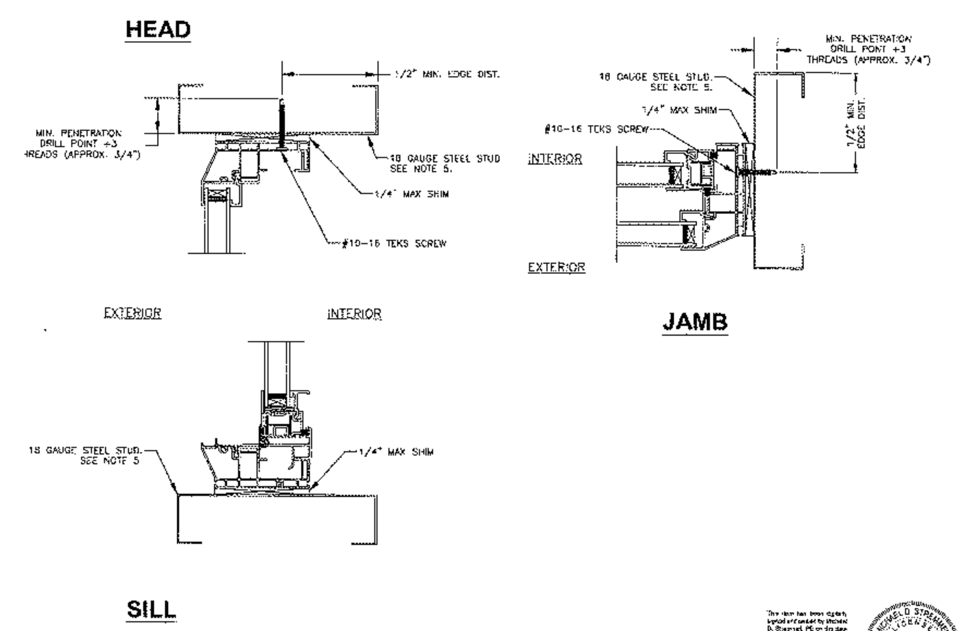

Note:
Waterproofing and interior finishes by others. Not shown for clarity.

3540 Single Hung - non Impact
Finless Install to Steel Stud
MI Windows and Doors
702 W. Market St.
Gratz, PA 17030
Drawing No.: 27488.06-1001
Project No.: 27488.06-107-16
Drawn By: MDS Rev: - Date:12/11/23
Scale: NTS | Sheet 5 of 11

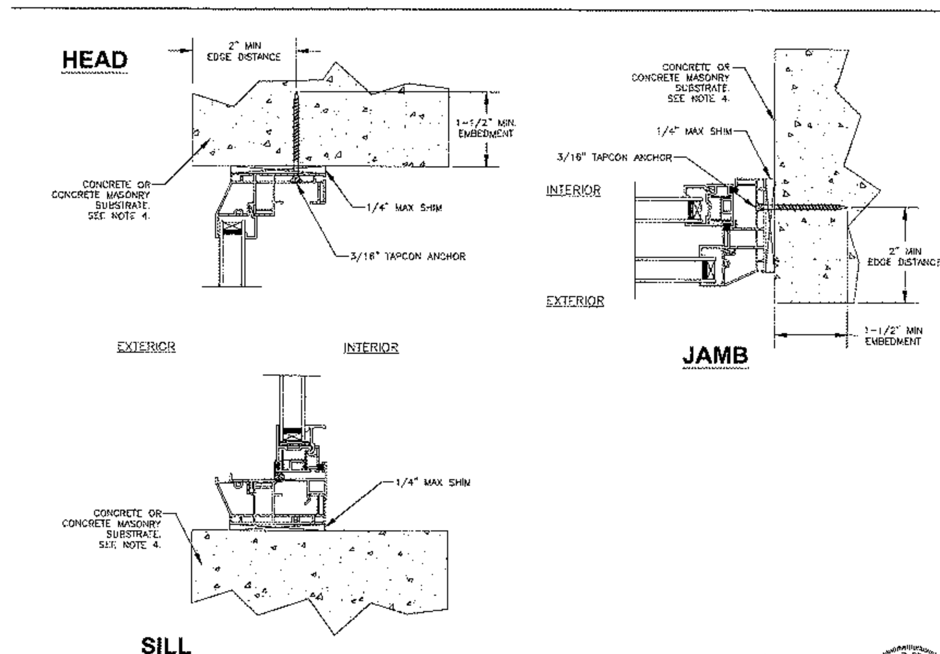

Note:
Waterproofing and interior finishes by others. Not shown for clarity.

3540 Single Hung - non Impact
Finless Install to Concrete/CMU
MI Windows and Doors
702 W. Market St.
Gratz, PA 17030
Drawing No.: 27488.06-1001
Project No.: 27488.06-107-16
Drawn By: MDS Rev: - Date:12/11/23
Scale: NTS | Sheet 6 of 11

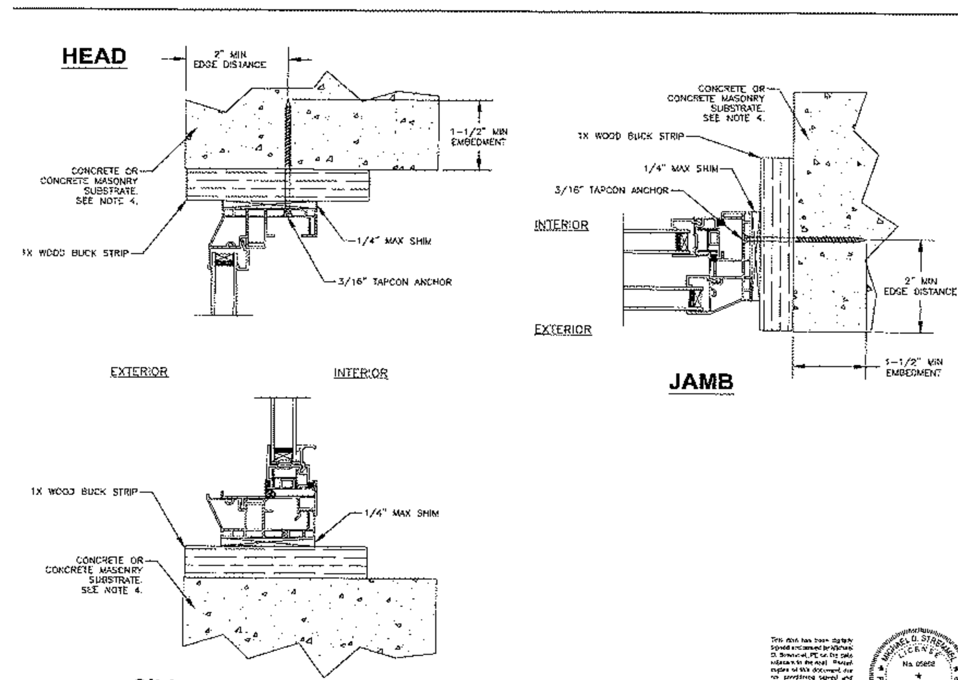

Note:
Waterproofing and interior finishes by others. Not shown for clarity

3540 Single Hung - non Impact
Finless Install to Concrete/CMU
MI Windows and Doors
702 W. Market St.
Gratz, PA 17030
Drawing No.: 27488.06-1001
Project No.: 27488.06-107-16
Drawn By: MDS Rev: - Date:12/11/23
Scale: NTS | Sheet 7 of 11

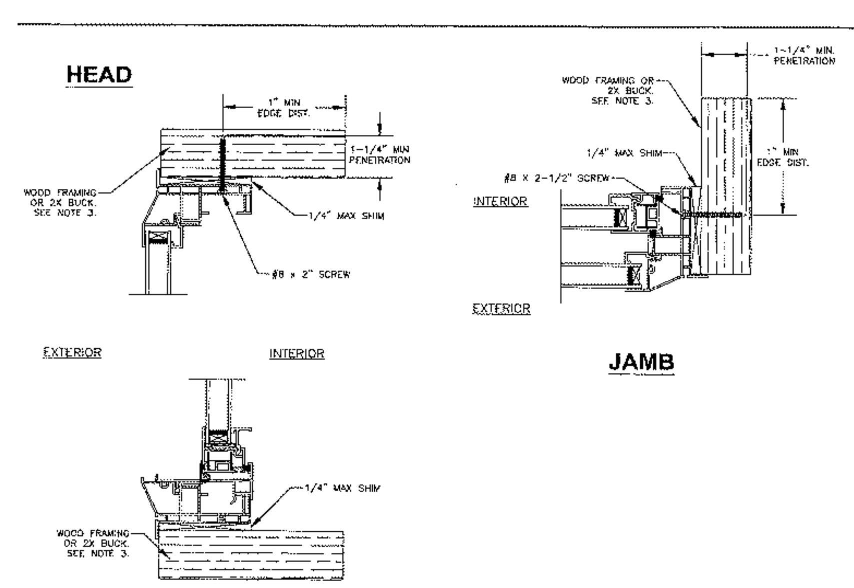

Note
Waterproofing and interior finishes by others. Not shown for clarity.

3540 Single Hung - non Impact
Flange Install to Wood
MI Windows and Doors
702 W. Market St.
Gratz, PA 17030
Drawing No.: 27488.06-1001
Project No.: 27488.06-107-16
Drawn By: MDS Rev: - Date:12/11/23
Scale: NTS | Sheet 8 of 11

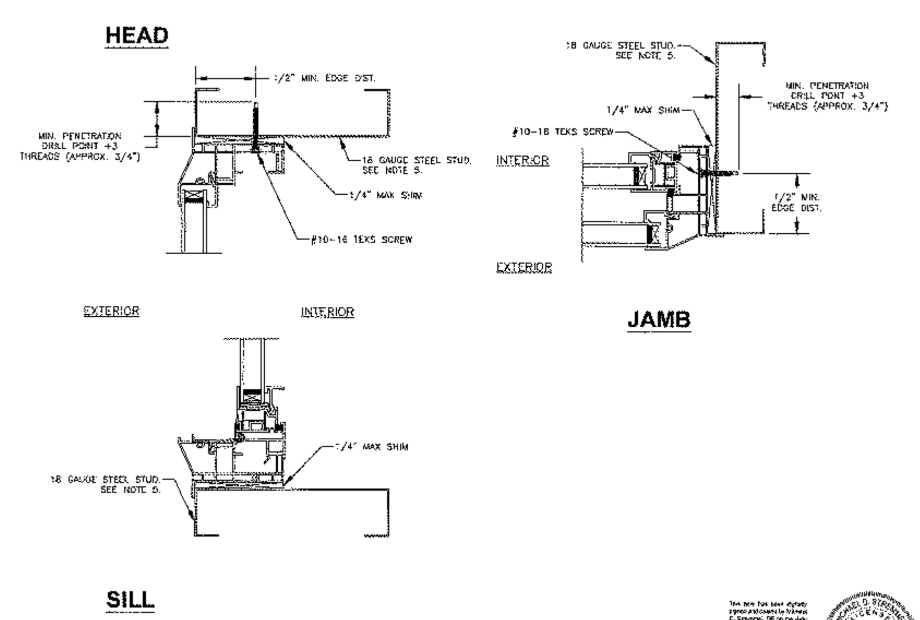

Note:
Waterproofing and interior finishes by others. Not shown for clarity.

3540 Single Hung - non Impact
Flange Install to Steel Stud
MI Windows and Doors
702 W. Market St.
Gratz, PA 17030
Drawing No.: 27488.06-1001
Project No.: 27488.06-107-16
Drawn By: MDS Rev: - Date:12/11/23
Scale: NTS | Sheet 9 of 11

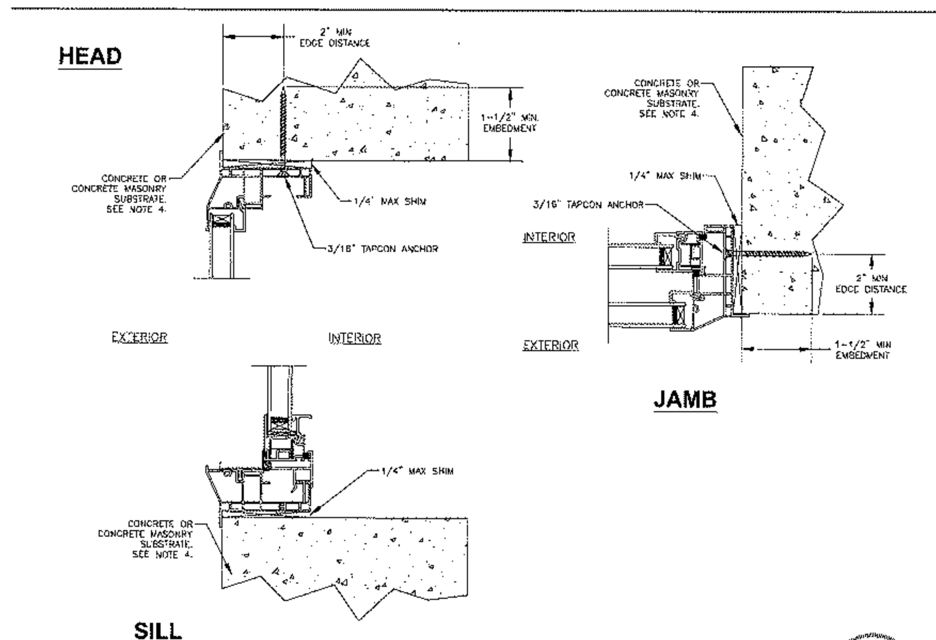

Note:
Waterproofing and interior finishes by others. Not shown for clarity.

3540 Single Hung - non Impact
Flange Install to Concrete/CMU
MI Windows and Doors
702 W. Market St.
Gratz, PA 17030
Drawing No.: 27488.06-1001
Project No.: 27488.06-107-16
Drawn By: MDS Rev: - Date:12/11/23
Scale: NTS | Sheet 10 of 11

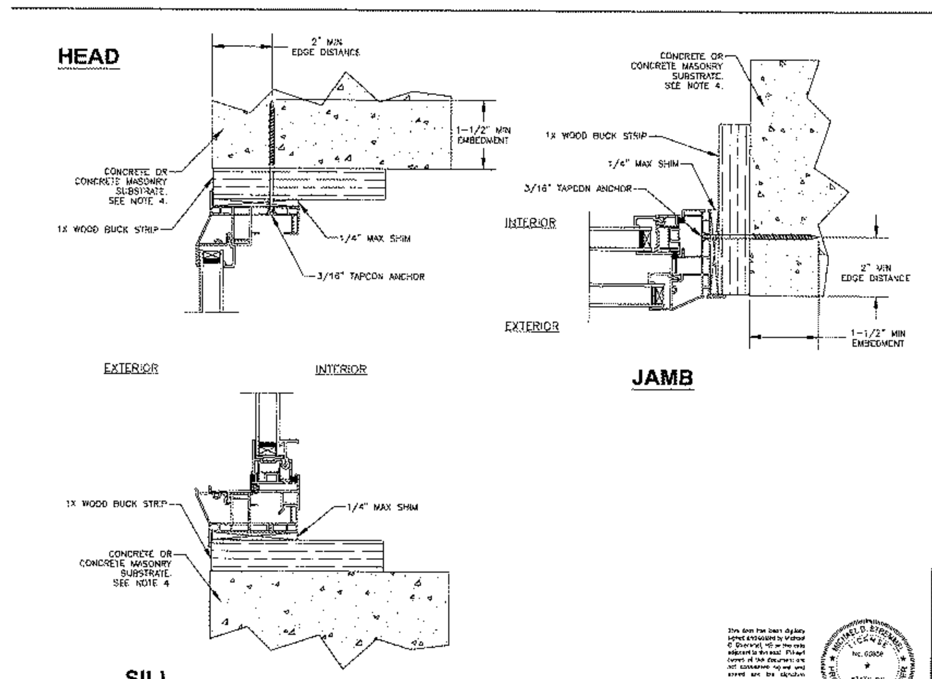

Note:
Waterproofing and interior finishes by others. Not shown for clarity.

3540 Single Hung - non Impact
Flange Install to Concrete/CMU
MI Windows and Doors
702 W. Market St.
Gratz, PA 17030
Drawing No.: 27488.06-1001
Project No.: 27488.06-107-16
Drawn By: MDS Rev: - Date:12/11/23
Scale: NTS | Sheet 11 of 11

FLORIDA PRODUCT APPROVAL #41886.16

PRODUCT REL. DATE
1 — 1-1-24 REVISED TO 8TH EDITION CODE 2023
2 — 7-1-24 REVISED SHEET
REVISIONS :

Maronda Homes
4005 MARONDA WAY
SANFORD, FL 32771
(407) 321-0064

FLORIDA:
THIS STRUCTURE WAS DESIGNED IN ACCORDANCE AND MEETS THE REQUIREMENTS OF SECTION R301 OF THE FLORIDA BUILDING CODE 8th EDITION (2023) : RESIDENTIAL. ALL CONNECTORS HAVE BEEN CHECK'D TO WITHSTAND ALL APPLICABLE LOADS AND DESIGN CRITERIA STATED ON THE COVER SHEET.

DESIGNED WIND SPEED
Vult = 160 MPH
Vasd = 124 MPH

Manufacture
MI Windows

GARAGE:
DRAWN BY:
RELEASE DATE: JULY 6, 2015

SHEET:
WIN-V1

COPYRIGHT © 2012 MARONDA HOMES

...\title_blks\24x36-standard.brd Mar. 16, 2012 13:34:20

FLORIDA PRODUCT APPROVAL FL #15332

REVISIONS			
REV	DESCRIPTION	DATE	APPROVED
A	ADDED FLANGE INSTALLATIONS	12/10/13	R.L.
B	REVISED INSTALLATION DETAILS	08/03/15	R.L.
C	REVISED INSTALLATION DETAILS	06/21/17	R.L.

NOTES:
1. THE PRODUCT SHOWN HEREIN IS DESIGNED AND MANUFACTURED TO COMPLY WITH REQUIREMENTS OF THE FLORIDA BUILDING CODE.
2. WOOD FRAMING AND MASONRY OPENING TO BE DESIGNED AND ANCHORED TO PROPERLY TRANSFER ALL LOADS TO STRUCTURE. FRAMING AND MASONRY OPENING IS THE RESPONSIBILITY OF THE ARCHITECT OR ENGINEER OF RECORD.
3. 1X BUCK OVER MASONRY/CONCRETE IS OPTIONAL. WHERE 1X BUCK IS NOT USED DISSIMILAR MATERIALS MUST BE SEPARATED WITH APPROVED COATING OR MEMBRANE. SELECTION OF COATING OR MEMBRANE IS THE RESPONSIBILITY OF THE ARCHITECT OR ENGINEER OF RECORD.
4. ALLOWABLE STRESS INCREASE OF 1/3 WAS NOT USED IN THE DESIGN OF THE PRODUCT SHOWN HEREIN. WIND LOAD DURATION FACTOR Cd=1.6 WAS USED FOR WOOD ANCHOR CALCULATIONS.
5. FRAME MATERIAL: EXTRUDED ALUMINUM 6063–T5.
6. UNITS MUST BE GLAZED PER ASTM E1300–04/09, WITH SAFETY GLASS.
7. APPROVED IMPACT PROTECTIVE SYSTEM IS REQUIRED FOR THIS PRODUCT IN WIND BORNE DEBRIS REGIONS.
8. SHIM AS REQUIRED AT EACH INSTALLATION ANCHOR WITH LOAD BEARING SHIM. SHIM WHERE SPACE OF 1/16" OR GREATER OCCURS. MAXIMUM ALLOWABLE SHIM STACK TO BE 1/4".
9. DOOR ASSEMBLIES INSTALLED WHERE OVERHANG RATIO IS EQUAL OR GREATER THAN 1.0 DO NOT REQUIRE WATER INFILTRATION RESISTANCE.
   OVERHANG RATIO = OVERHANG LENGTH/OVERHANG HEIGHT.
10. FOR ANCHORING INTO WOOD FRAMING OR 2X BUCK USE #10 WOOD SCREWS WITH SUFFICIENT LENGTH TO ACHIEVE A 1 3/8" MINIMUM EMBEDMENT INTO SUBSTRATE. LOCATE ANCHORS AS SHOWN IN ELEVATIONS AND INSTALLATION DETAILS.
11. FOR ANCHORING INTO MASONRY/CONCRETE USE 3/16" TAPCONS WITH SUFFICIENT LENGTH TO ACHIEVE A 1 1/4" MINIMUM EMBEDMENT INTO SUBSTRATE WITH 1'' MINIMUM EDGE DISTANCE. LOCATE ANCHORS AS SHOWN IN ELEVATIONS AND INSTALLATION DETAILS.
12. FOR ANCHORING INTO METAL STRUCTURE USE #10 SMS OR SELF DRILLING SCREWS WITH SUFFICIENT LENGTH TO ACHIEVE 3 THREADS MINIMUM BEYOND STRUCTURE INTERIOR WALL. LOCATE ANCHORS AS SHOWN IN ELEVATIONS AND INSTALLATION DETAILS.
13. ALL FASTENERS TO BE CORROSION RESISTANT.
14. INSTALLATION ANCHORS SHALL BE INSTALLED IN ACCORDANCE WITH ANCHOR MANUFACTURER'S INSTALLATION INSTRUCTIONS AND ANCHORS SHALL NOT BE USED IN SUBSTRATES WITH STRENGTHS LESS THAN THE MINIMUM STRENGTH SPECIFIED BELOW:
   A. WOOD – MINIMUM SPECIFIC GRAVITY OF G=0.42
   B. CONCRETE – MINIMUM COMPRESSIVE STRENGTH OF 3,192 PSI.
   C. MASONRY – STRENGTH CONFORMANCE TO ASTM C–90, GRADE N, TYPE 1 (OR GREATER).
   D. METAL STRUCTURE: STEEL 18GA, 33KSI OR ALUMINUM 6063–T5 .048" THICK MINIMUM

TABLE OF CONTENTS	
SHEET NO.	DESCRIPTION
1	NOTES
2	ELEVATION
3 – 9	INSTALLATION DETAILS

SIGNED: 06/21/2017

MI WINDOWS AND DOORS LLC
650 WEST MARKET STREET
GRATZ, PA 17030
SERIES 430/440 XIX SGD
143" x 96" REINFORCED WITHOUT ADAPTER
NOTES

DRAWN: V.L.	DWG NO. 08–02250	REV C
SCALE NTS	DATE 10/30/13	SHEET 1 OF 9

L. ROBERTO LOMAS P.E.
1432 WOODFORD RD LEWISVILLE, NC 27023
434-688-0609 rllomas@lrlomaspe.com

Luis R. Lomas P.E.
FL No.: 62514

REVISIONS			
REV	DESCRIPTION	DATE	APPROVED
A	ADDED FLANGE INSTALLATIONS	12/10/13	R.L.
B	REVISED INSTALLATION DETAILS	08/03/15	R.L.
C	REVISED INSTALLATION DETAILS	06/21/17	R.L.

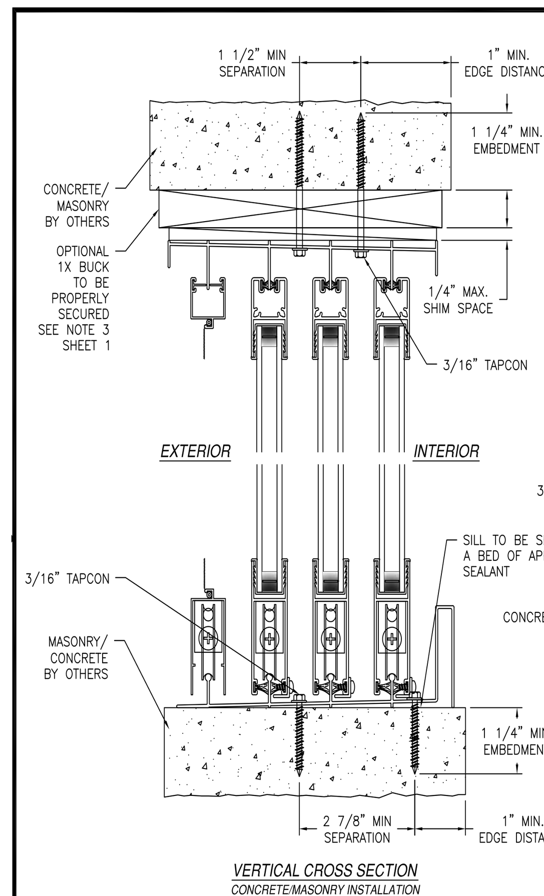

VERTICAL CROSS SECTION
CONCRETE/MASONRY INSTALLATION

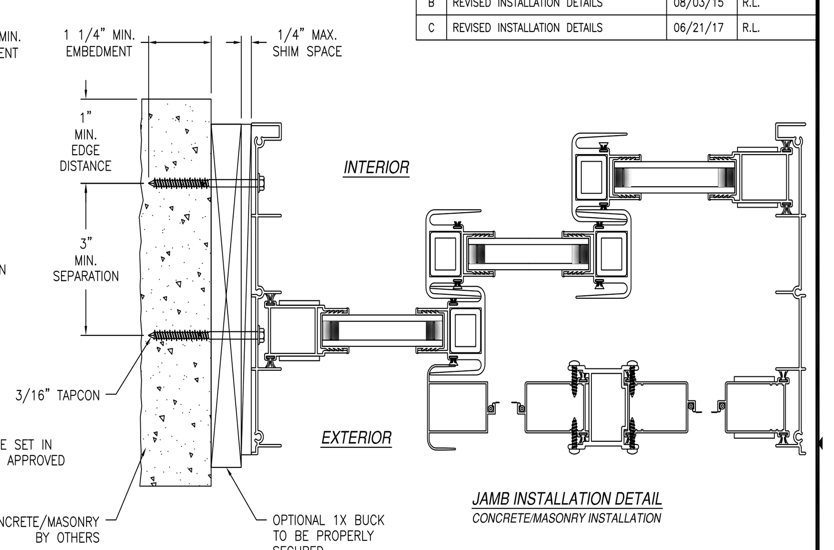

JAMB INSTALLATION DETAIL
CONCRETE/MASONRY INSTALLATION

NOTES:
1. INTERIOR AND EXTERIOR FINISHES, BY OTHERS, NOT SHOWN FOR CLARITY.
2. PERIMETER AND JOINT SEALANT BY OTHERS TO BE DESIGNED IN ACCORDANCE WITH ASTM E2112

SIGNED: 06/21/2017

MI WINDOWS AND DOORS LLC
650 WEST MARKET STREET
GRATZ, PA 17030
SERIES 430/440 XIX SGD
143" x 96" REINFORCED WITHOUT ADAPTER
FRAME INSTALLATION DETAILS

DRAWN: V.L.	DWG NO. 08–02250	REV C
SCALE NTS	DATE 10/30/13	SHEET 5 OF 9

L. ROBERTO LOMAS P.E.
1432 WOODFORD RD LEWISVILLE, NC 27023
434-688-0609 rllomas@lrlomaspe.com

Luis R. Lomas P.E.
FL No.: 62514

REVISIONS			
REV	DESCRIPTION	DATE	APPROVED
A	ADDED FLANGE INSTALLATIONS	12/10/13	R.L.
B	REVISED INSTALLATION DETAILS	08/03/15	R.L.
C	REVISED INSTALLATION DETAILS	06/21/17	R.L.

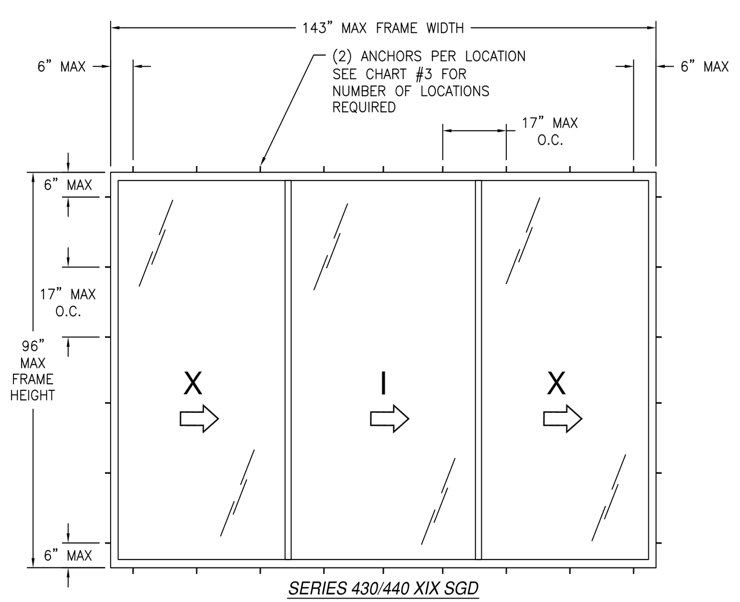

SERIES 430/440 XIX SGD
EXTERIOR VIEW

DESIGN PRESSURE RATING	IMPACT RATING
±35.0PSF	NONE

SEE CHARTS #1 AND #2 FOR OTHER UNITS RATINGS

CHART #1
WHERE WATER INFILTRATION RESISTANCE IS REQUIRED
SEE NOTE 9 SHEET 1

Design pressure chart (psf)								
Frame Height (in)	Single Panel and Total Frame Width (in)							
	30.0		36.0		42.0		47.7	
	90.00		108.00		126.00		143.00	
	Pos	Neg	Pos	Neg	Pos	Neg	Pos	Neg
84.0	40.0	58.2	40.0	50.7	40.0	45.5	40.0	42.0
88.0	40.0	55.0	40.0	47.8	40.0	42.8	39.4	39.4
92.0	40.0	52.1	40.0	45.2	40.0	40.4	37.1	37.1
96.0	40.0	49.5	40.0	42.9	38.2	38.2	35.0	35.0

CHART #2
WHERE WATER INFILTRATION RESISTANCE IS NOT REQUIRED
SEE NOTE 9 SHEET 1

Design pressure chart (psf)								
Frame Height (in)	Single Panel and Total Frame Width (in)							
	30.0		36.0		42.0		47.7	
	90.00		108.00		126.00		143.00	
	Pos	Neg	Pos	Neg	Pos	Neg	Pos	Neg
84.0	58.2	58.2	50.7	50.7	45.5	45.5	42.0	42.0
88.0	55.0	55.0	47.8	47.8	42.8	42.8	39.4	39.4
92.0	52.1	52.1	45.2	45.2	40.4	40.4	37.1	37.1
96.0	49.5	49.5	42.9	42.9	38.2	38.2	35.0	35.0

CHART #3

Number of anchor locations required								
Frame Height (in)	Single Panel and Total Frame Width (in)							
	30.0		36.0		42.0		47.7	
	90.0		108.0		126.0		143.0	
	H&S	Jamb	H&S	Jamb	H&S	Jamb	H&S	Jamb
84.0	6	6	7	6	8	6	9	6
88.0	6	6	7	6	8	6	9	6
92.0	6	6	7	6	8	6	9	6
96.0	6	6	7	6	8	6	9	6

NOTES:
1. MAXIMUM PANEL SIZE: 48 1/2" x 95"
2. MAXIMUM D.L.O.: 44 38" x 90 5/8"

HARDWARE SCHEDULE	
A.	(1) FLAT MOUNTED HANDLE SET (99-04-145) AT 37 3/4" ON CENTER FROM PANEL BOTTOM
B.	(1) METALLIC TANDEM ROLLERS (99-17-195) AT EACH END OF PANEL BOTTOM RAILS
C.	ALUMINUM 6063-T6 REINFORCEMENT (668) AT ALL PANEL INTERLOCKS

SIGNED: 06/21/2017

MI WINDOWS AND DOORS LLC
650 WEST MARKET STREET
GRATZ, PA 17030
SERIES 430/440 XIX SGD
143" x 96" REINFORCED WITHOUT ADAPTER
ELEVATIONS

DRAWN: V.L.	DWG NO. 08–02250	REV C
SCALE NTS	DATE 10/30/13	SHEET 2 OF 9

L. ROBERTO LOMAS P.E.
1432 WOODFORD RD LEWISVILLE, NC 27023
434-688-0609 rllomas@lrlomaspe.com

Luis R. Lomas P.E.
FL No.: 62514

REVISIONS			
REV	DESCRIPTION	DATE	APPROVED
A	ADDED FLANGE INSTALLATIONS	12/10/13	R.L.
B	REVISED INSTALLATION DETAILS	08/03/15	R.L.
C	REVISED INSTALLATION DETAILS	06/21/17	R.L.

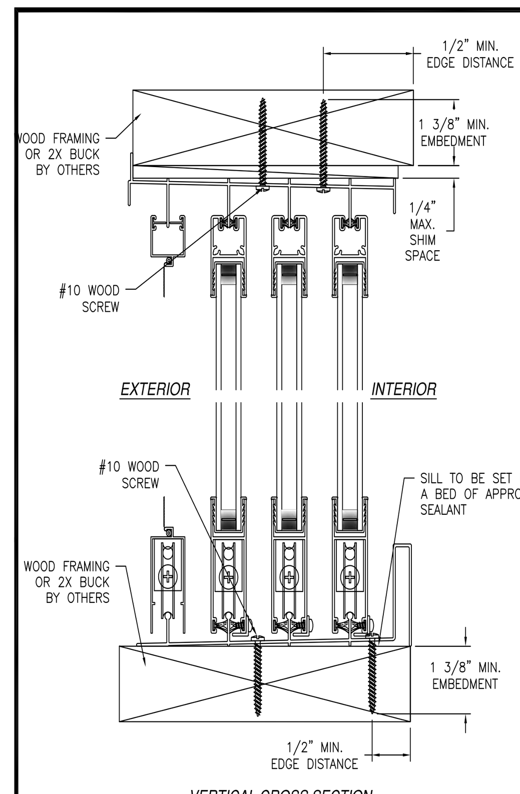

VERTICAL CROSS SECTION
WOOD FRAMING OR 2X BUCK INSTALLATION

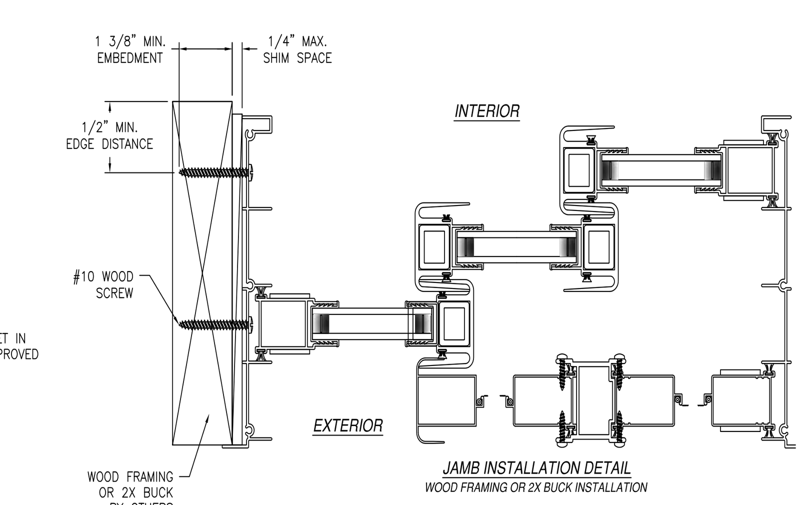

JAMB INSTALLATION DETAIL
WOOD FRAMING OR 2X BUCK INSTALLATION

NOTES:
1. INTERIOR AND EXTERIOR FINISHES, BY OTHERS, NOT SHOWN FOR CLARITY.
2. PERIMETER AND JOINT SEALANT BY OTHERS TO BE DESIGNED IN ACCORDANCE WITH ASTM E2112

SIGNED: 06/21/2017

MI WINDOWS AND DOORS LLC
650 WEST MARKET STREET
GRATZ, PA 17030
SERIES 430/440 XIX SGD
143" x 96" REINFORCED WITHOUT ADAPTER
FLANGE INSTALLATION DETAILS

DRAWN: V.L.	DWG NO. 08–02250	REV C
SCALE NTS	DATE 10/30/13	SHEET 6 OF 9

L. ROBERTO LOMAS P.E.
1432 WOODFORD RD LEWISVILLE, NC 27023
434-688-0609 rllomas@lrlomaspe.com

Luis R. Lomas P.E.
FL No.: 62514

REVISIONS			
REV	DESCRIPTION	DATE	APPROVED
A	ADDED FLANGE INSTALLATIONS	12/10/13	R.L.
B	REVISED INSTALLATION DETAILS	08/03/15	R.L.
C	REVISED INSTALLATION DETAILS	06/21/17	R.L.

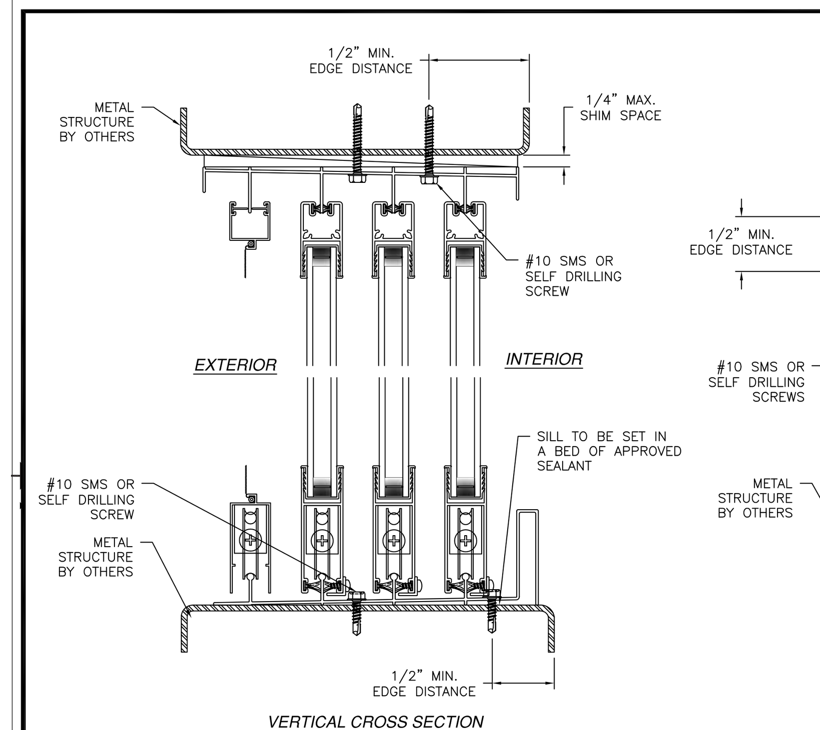

VERTICAL CROSS SECTION
METAL STRUCTURE INSTALLATION

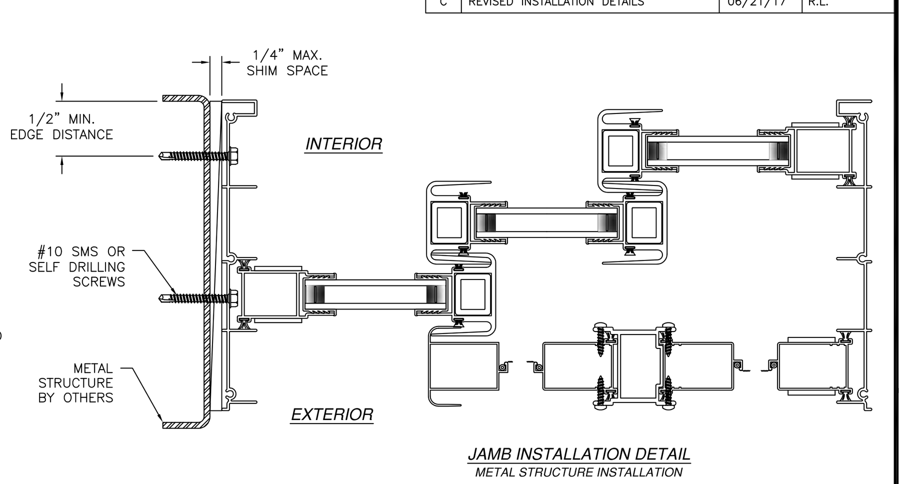

JAMB INSTALLATION DETAIL
METAL STRUCTURE INSTALLATION

NOTES:
1. INTERIOR AND EXTERIOR FINISHES, BY OTHERS, NOT SHOWN FOR CLARITY.
2. PERIMETER AND JOINT SEALANT BY OTHERS TO BE DESIGNED IN ACCORDANCE WITH ASTM E2112

SIGNED: 06/21/2017

MI WINDOWS AND DOORS LLC
650 WEST MARKET STREET
GRATZ, PA 17030
SERIES 430/440 XIX SGD
143" x 96" REINFORCED WITHOUT ADAPTER
FRAME INSTALLATION DETAILS

DRAWN: V.L.	DWG NO. 08–02250	REV C
SCALE NTS	DATE 10/30/13	SHEET 4 OF 9

L. ROBERTO LOMAS P.E.
1432 WOODFORD RD LEWISVILLE, NC 27023
434-688-0609 rllomas@lrlomaspe.com

Luis R. Lomas P.E.
FL No.: 62514

REVISIONS			
REV	DESCRIPTION	DATE	APPROVED
A	ADDED FLANGE INSTALLATIONS	12/10/13	R.L.
B	REVISED INSTALLATION DETAILS	08/03/15	R.L.
C	REVISED INSTALLATION DETAILS	06/21/17	R.L.

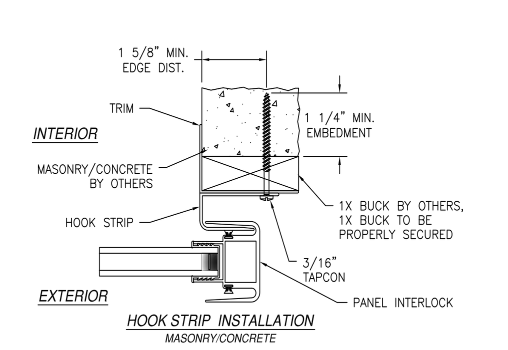

HOOK STRIP INSTALLATION
MASONRY/CONCRETE

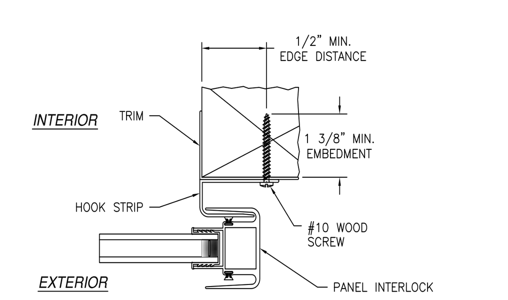

HOOK STRIP INSTALLATION
2X BUCK/WOOD FRAMING

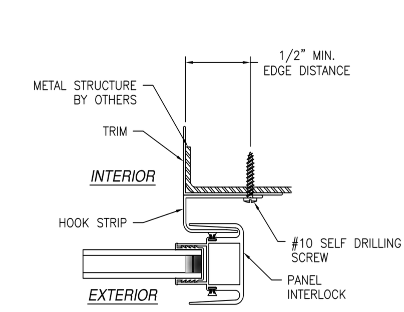

HOOK STRIP INSTALLATION
METAL STRUCTURE

NOTES:
1. INTERIOR AND EXTERIOR FINISHES, BY OTHERS, NOT SHOWN FOR CLARITY.
2. PERIMETER AND JOINT SEALANT BY OTHERS TO BE DESIGNED IN ACCORDANCE WITH ASTM E2112

SIGNED: 06/21/2017

MI WINDOWS AND DOORS LLC
650 WEST MARKET STREET
GRATZ, PA 17030
SERIES 430/440 XIX SGD
143" x 96" REINFORCED WITHOUT ADAPTER
HOOK INSTALLATION DETAILS

DRAWN: V.L.	DWG NO. 08–02250	REV C
SCALE NTS	DATE 10/30/13	SHEET 9 OF 9

L. ROBERTO LOMAS P.E.
1432 WOODFORD RD LEWISVILLE, NC 27023
434-688-0609 rllomas@lrlomaspe.com

Luis R. Lomas P.E.
FL No.: 62514

FLORIDA PRODUCT APPROVAL FL # 17894.3

ELEVATION

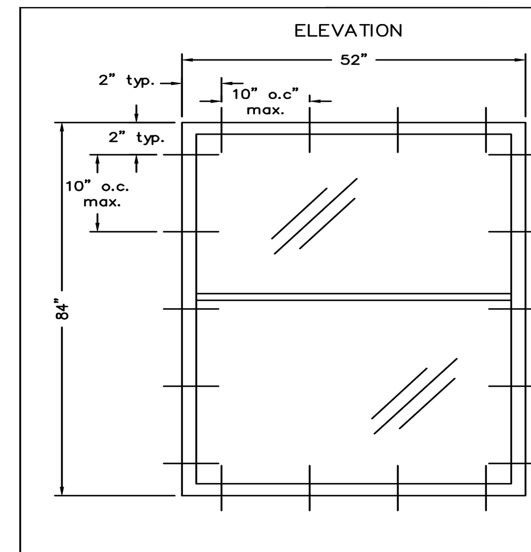

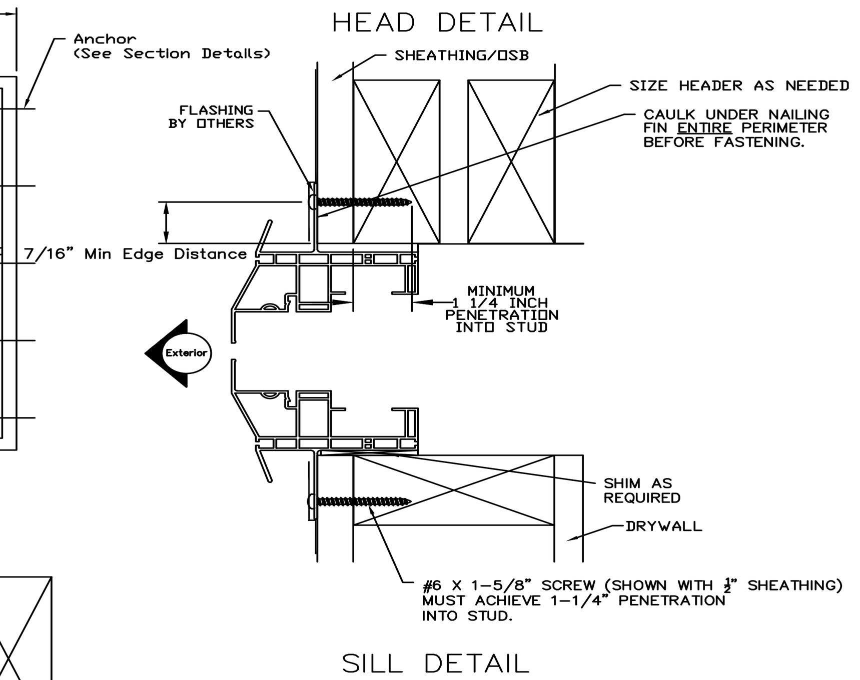

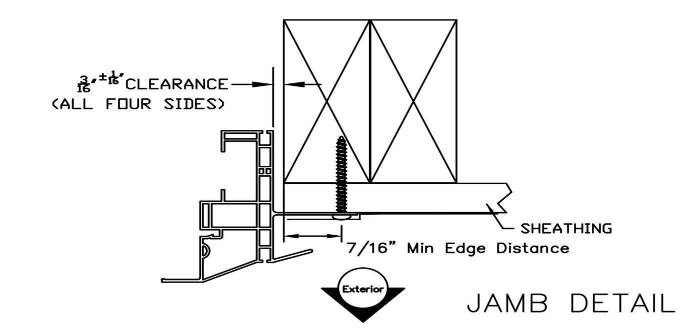

* 'NAIL FIN' IS A GENERIC TERM WHICH MEANS 'MOUNTING FLANGE'. (NOT TO BE CONFUSED WITH '1/2' FRONT FLANGE)

Notes:
1. Installation depicted based off of structural test report B9171.01.
2. Wood screws shall satify the National Design Specification for Wood Construction for material type and dimensional requirements.
3. Wood buck installations are assumed 2x S–P–F (G=0.42) or denser. Buck width shall be greater than the window frame width. Tapered or partial width bucks are not allowed. Wood buck shall be secured to the structure to resist all design loads.
4. Wood screw lengths shall be sufficient to guarantee 1–1/4" penetration into wood buck.
5. Maximum shim thickness of 1/4" permitted at each fastener location. Shims shall be load bearing, non–compressible type.
6. These drawings depict the details necessary to meet structural load requirements. They do not address the air infiltration, water penetration, intrusion or thermal performance requirements of the installation.
7. Installation shown is that of the test window for the size shown and the design pressure claimed. For window sizes smaller than shown, locate jamb fasteners 2" from corners and no more than 10" on center. Locate head/sill fasteners 2" from corners and no more than 10" on center. Design pressures of smaller window sizes are limited to that of the test window.

SIZE AND DESIGN PRESSURE CHART
FASTENER TYPE AND SPACING SHOWN WILL ALLOW DESIGN PRESSURES UP TO +50/–50 UNITS UP TO 52" x 84"
(SEE TEST REPORTS FOR INDIVIDUAL UNIT SIZE AND APPLICABLE DESIGN PRESSURE LIMITATIONS)

Windows & Doors
Gratz, PA

TITLE: INSTALLATION INSTRUCTIONS & FASTENER SCHEDULE — FIN—
PRODUCT: 3500HP Single Hung

DRAWN BY: Brent	DATE: 10/18/12
CHECKED:	DATE:
SCALE: NONE	SHEET: 1 OF 1
DWG. NO. ED12–10005A	REV. —

FLORIDA PRODUCT APPROVAL FL # 17894.4

REVISIONS			
REV	DESCRIPTION	DATE	APPROVED
A	REVISED ANCHORS	05/03/13	R.L.
B	REVISED INSTALLATION DETAILS	07/10/15	R.L.

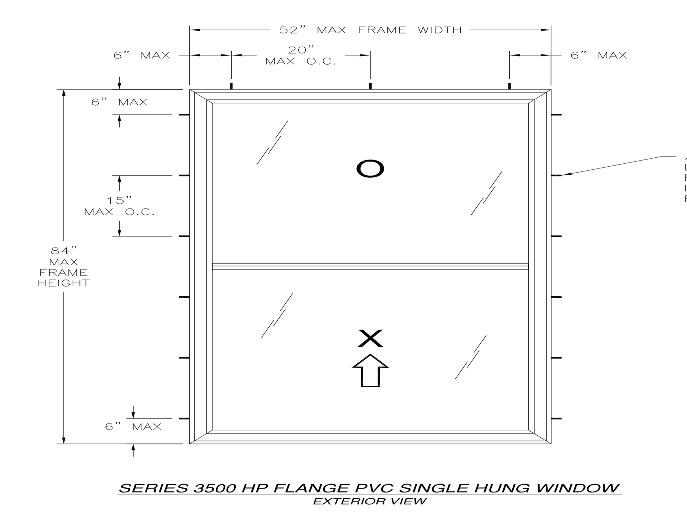

SERIES 3500 HP FLANGE PVC SINGLE HUNG WINDOW
EXTERIOR VIEW

DESIGN PRESSURE RATING	IMPACT RATING
±50.0PSF	NONE

Number of anchor locations required														
Frame Height (in)	Frame width (in)													
	18.00		24.00		30.00		36.00		42.00		48.00		52.00	
	Head	Jamb	Head	Jamb	Head	Jamb	Head	Jamb	Head	Jamb	Head	Jamb	Head	Jamb
24.00	2	2	2	2	2	2	3	2	3	2	3	2	3	2
30.00	2	2	2	2	2	2	3	2	3	2	3	2	3	2
36.00	2	3	2	3	2	3	3	3	3	3	3	3	3	3
42.00	2	3	2	3	2	3	3	3	3	3	3	3	3	3
48.00	2	4	2	4	2	4	3	4	3	4	3	4	3	4
54.00	2	4	2	4	2	4	3	4	3	4	3	4	3	4
60.00	2	5	2	5	2	5	3	5	3	5	3	5	3	5
66.00	2	5	2	5	2	5	3	5	3	5	3	5	3	5
72.00	2	6	2	6	2	6	3	6	3	6	3	6	3	6
78.00	2	6	2	6	2	6	3	6	3	6	3	6	3	6
84.00	2	6	2	6	2	6	3	6	3	6	3	6	3	6

SIGNED: 07/13/2015

MI WINDOWS AND DOORS
650 WEST MARKET ST
GRATZ, PA 17030–0370
SERIES 3500 HP FLANGE PVC SINGLE HUNG WINDOW
ALUMINUM REINFORCED – NON–IMPACT
ELEVATION AND NOTES

DRAWN: R.L.	DWG NO. 08–01730	REV B
SCALE NTS	DATE 06/06/12	SHEET 2 OF 5

REVISIONS			
REV	DESCRIPTION	DATE	APPROVED
A	REVISED ANCHORS	05/03/13	R.L.
B	REVISED INSTALLATION DETAILS	07/10/15	R.L.

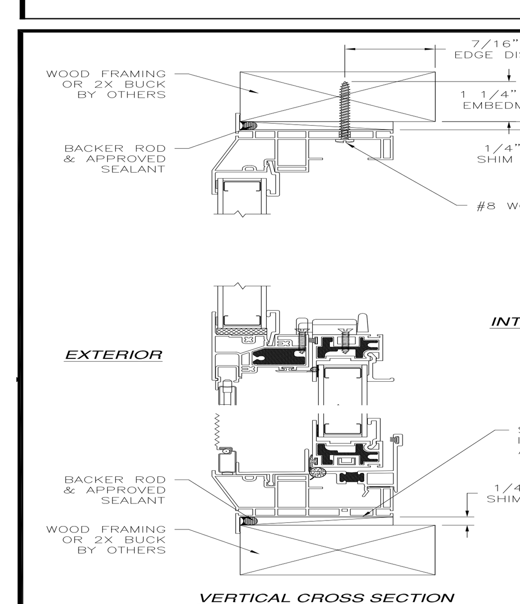

VERTICAL CROSS SECTION
WOOD FRAMING OR 2X BUCK INSTALLATION

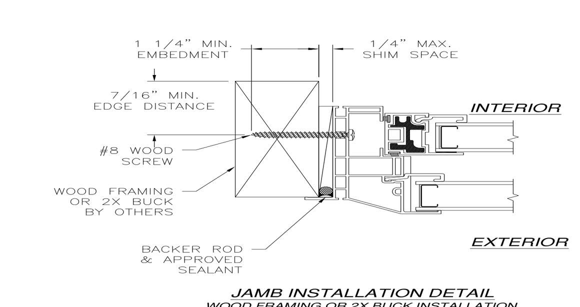

JAMB INSTALLATION DETAIL
WOOD FRAMING OR 2X BUCK INSTALLATION

NOTES:
1. INTERIOR AND EXTERIOR FINISHES, BY OTHERS, NOT SHOWN FOR CLARITY.
2. PERIMETER AND JOINT SEALANT BY OTHERS TO BE DESIGNED IN ACCORDANCE WITH ASTM E2112

SIGNED: 07/13/2015

MI WINDOWS AND DOORS
650 WEST MARKET ST
GRATZ, PA 17030–0370
SERIES 3500 HP FLANGE PVC SINGLE HUNG WINDOW
ALUMINUM REINFORCED – NON–IMPACT
ELEVATION AND NOTES

DRAWN: R.L.	DWG NO. 08–01730	REV B
SCALE NTS	DATE 06/06/12	SHEET 3 OF 5

REVISIONS			
REV	DESCRIPTION	DATE	APPROVED
A	REVISED ANCHORS	05/03/13	R.L.
B	REVISED INSTALLATION DETAILS	07/10/15	R.L.

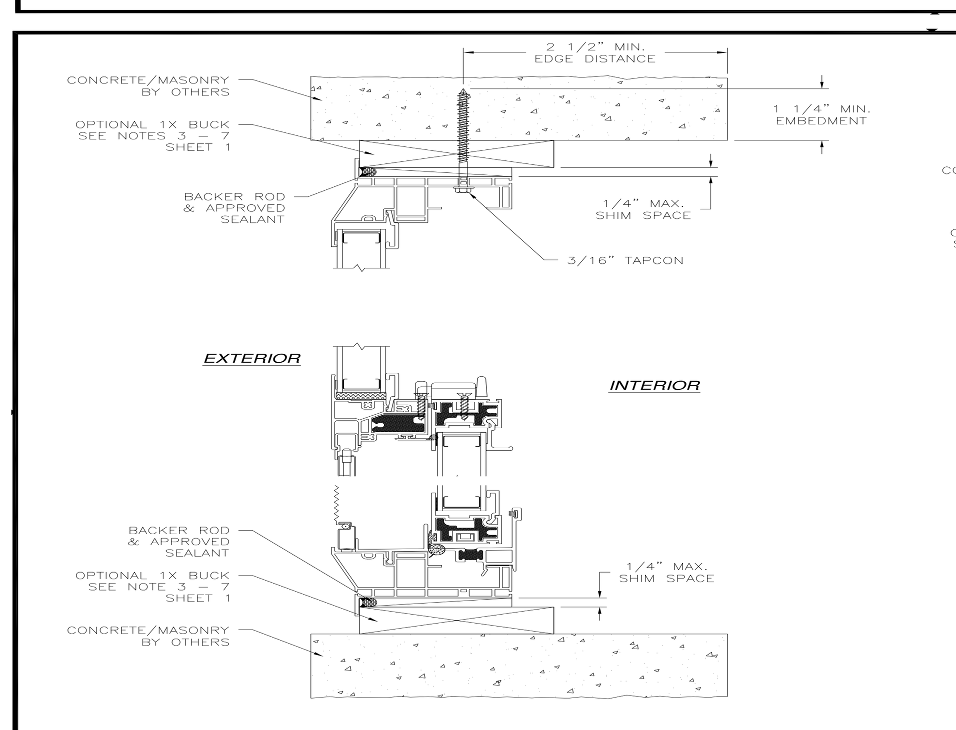

VERTICAL CROSS SECTION
CONCRETE/MASONRY INSTALLATION

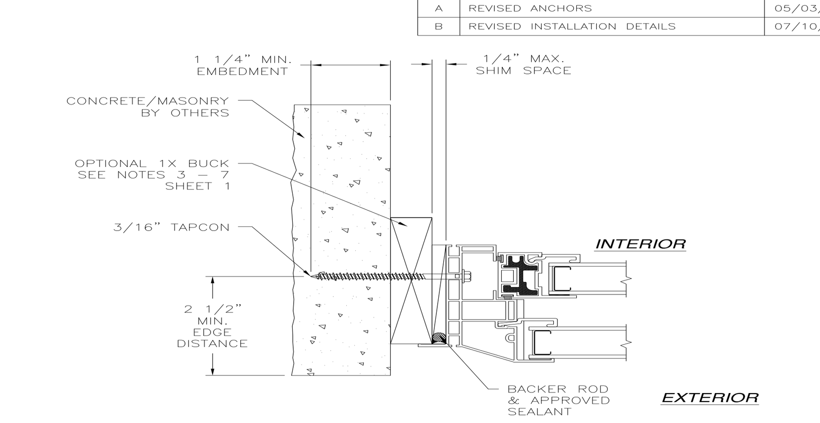

JAMB INSTALLATION DETAIL
CONCRETE/MASONRY INSTALLATION

NOTES:
1. INTERIOR AND EXTERIOR FINISHES, BY OTHERS, NOT SHOWN FOR CLARITY.
2. PERIMETER AND JOINT SEALANT BY OTHERS TO BE DESIGNED IN ACCORDANCE WITH ASTM E2112

SIGNED: 07/13/2015

MI WINDOWS AND DOORS
650 WEST MARKET ST
GRATZ, PA 17030–0370
SERIES 3500 HP FLANGE PVC SINGLE HUNG WINDOW
ALUMINUM REINFORCED – NON–IMPACT
ELEVATION AND NOTES

DRAWN: R.L.	DWG NO. 08–01730	REV B
SCALE NTS	DATE 06/06/12	SHEET 5 OF 5

COPYRIGHT © 2012 MARONDA HOMES

Product Approval
FL #15332
FL #17894

PRODUCT REL. DATE
1-1-24 revised 2023 Code
REVISIONS :

Maronda Homes
4005 MARONDA WAY
SANFORD, FL 32771
(407) 321–0064

FLORIDA:
THIS STRUCTURE WAS DESIGNED IN ACCORDANCE AND MEETS THE REQUIREMENTS OF SECTION R301 OF THE FLORIDA BUILDING CODE 8th EDITION (2023) ; RESIDENTIAL. ALL CONNECTORS HAVE BEEN CHECK'D TO WITHSTAND ALL APPLICABLE LOADS AND DESIGN CRITERIA STATED ON THE COVER SHEET.

DESIGNED WIND SPEED
Vult = 160 MPH
Vasd = 124 MPH

Manufacture
MI WINDOWS SLIDING GLASS DOORS
MI WINDOWS
DRAWN BY:
GARAGE:
RELEASE DATE: JULY 6, 2015

SHEET:
WIN-V2

MI WINDOWS 3500 SERIES PW

REVISIONS			
REV	DESCRIPTION	DATE	APPROVED
A	ADDED FIN INSTALLATION	10/22/19	R.L.

NOTES:
1. THE PRODUCT SHOWN HEREIN IS DESIGNED AND MANUFACTURED TO COMPLY WITH REQUIREMENTS OF THE FLORIDA BUILDING CODE.
2. WOOD FRAMING AND MASONRY OPENING TO BE DESIGNED AND ANCHORED TO PROPERLY TRANSFER ALL LOADS TO STRUCTURE. FRAMING AND MASONRY OPENING IS THE RESPONSIBILITY OF THE ARCHITECT OR ENGINEER OF RECORD.
3. 1X BUCK OVER MASONRY/CONCRETE IS OPTIONAL.
4. WHERE SHIM OR BUCK THICKNESS IS LESS THAN 1-1/2" WINDOW UNITS MUST BE ANCHORED THROUGH THE FRAME IN ACCORDANCE WITH MANUFACTURER'S PUBLISHED INSTALLATION INSTRUCTIONS. ANCHORS SHALL BE SECURELY FASTENED DIRECTLY INTO MASONRY, CONCRETE OR OTHER STRUCTURAL SUBSTRATE MATERIAL.
5. WHERE WOOD BUCK THICKNESS IS 1-1/2" OR GREATER, BUCK SHALL BE SECURELY FASTENED TO MASONRY, CONCRETE OR OTHER STRUCTURAL SUBSTRATE. WINDOW UNITS MAY BE ANCHORED THROUGH FRAME TO SECURED WOOD BUCK IN ACCORDANCE WITH MANUFACTURER'S PUBLISHED INSTALLATION INSTRUCTIONS.
6. WHERE 1X BUCK IS NOT USED DISSIMILAR MATERIALS MUST BE SEPARATED WITH APPROVED COATING OR MEMBRANE. SELECTION OF COATING OR MEMBRANE IS THE RESPONSIBILITY OF THE ARCHITECT OR ENGINEER OF RECORD.
7. BUCKS SHALL EXTEND BEYOND WINDOW INTERIOR FACE SO THAT FULL FRAME SUPPORT IS PROVIDED.
8. FOR FIN INSTALLATION SHIM AS NEEDED. FOR FRAME INSTALLATION SHIM AS REQUIRED AT EACH ANCHOR LOCATION WITH LOAD BEARING SHIM. SHIM WHERE SPACE OF 1/16" OR GREATER OCCURS. MAXIMUM ALLOWABLE SHIM STACK TO BE 1/4".
9. SHIMS SHALL BE LOCATED, APPLIED AND MADE FROM MATERIALS AND THICKNESS CAPABLE OF SUSTAINING APPLICABLE LOADS.
10. WIND LOAD DURATION FACTOR Cd=1.6 WAS USED FOR WOOD ANCHOR CALCULATIONS.
11. FRAME MATERIAL: EXTRUDED RIGID PVC.
12. UNITS MUST BE GLAZED PER ASTM E1300-04/09.
13. APPROVED IMPACT PROTECTIVE SYSTEM IS REQUIRED FOR THIS PRODUCT IN WIND BORNE DEBRIS REGIONS.
14. FOR ANCHORING THROUGH FIN INTO WOOD FRAMING OR 2X BUCK USE #8 WOOD SCREWS WITH SUFFICIENT LENGTH TO ACHIEVE A 1 1/8" MINIMUM EMBEDMENT INTO SUBSTRATE. LOCATE ANCHORS AS SHOWN IN ELEVATIONS AND INSTALLATION DETAILS.
15. FOR ANCHORING FIN INTO STEEL STUDS USE #8 SMS OR SELF DRILLING SCREWS WITH SUFFICIENT LENGTH TO ACHIEVE 3 THREADS MINIMUM BEYOND STRUCTURE INTERIOR WALL. LOCATE ANCHORS AS SHOWN IN ELEVATIONS AND INSTALLATION DETAILS.
16. FOR ANCHORING THROUGH FRAME INTO WOOD FRAMING OR 2X BUCK USE #8 WOOD SCREWS WITH SUFFICIENT LENGTH TO ACHIEVE A 1 1/4" MINIMUM EMBEDMENT INTO SUBSTRATE. LOCATE ANCHORS AS SHOWN IN ELEVATIONS AND INSTALLATION DETAILS.
17. FOR ANCHORING THROUGH FRAME INTO MASONRY/CONCRETE USE 3/16" TAPCONS WITH SUFFICIENT LENGTH TO ACHIEVE A 1 1/4" MINIMUM EMBEDMENT INTO SUBSTRATE WITH 2" MINIMUM EDGE DISTANCE. LOCATE ANCHORS AS SHOWN IN ELEVATIONS AND INSTALLATION DETAILS.
18. FOR ANCHORING THROUGH FRAME INTO METAL STRUCTURE USE #8 SMS OR SELF DRILLING SCREWS WITH SUFFICIENT LENGTH TO ACHIEVE 3 THREADS MINIMUM BEYOND STRUCTURE INTERIOR WALL. LOCATE ANCHORS AS SHOWN IN ELEVATIONS AND INSTALLATION DETAILS.
19. ALL FASTENERS TO BE CORROSION RESISTANT.
20. INSTALLATION ANCHORS SHALL BE INSTALLED IN ACCORDANCE WITH ANCHOR MANUFACTURER'S INSTALLATION INSTRUCTIONS AND ANCHORS SHALL NOT BE USED IN SUBSTRATES WITH STRENGTHS LESS THAN THE MINIMUM STRENGTH SPECIFIED BELOW:
A. WOOD – MINIMUM SPECIFIC GRAVITY OF G=0.42
B. CONCRETE – MINIMUM COMPRESSIVE STRENGTH OF 3,192 PSI.
C. MASONRY – STRENGTH CONFORMANCE TO ASTM C-90, GRADE N, TYPE 1 (OR GREATER).
D. METAL STRUCTURE: STEEL 16GA (.060" THICK), 33KSI OR ALUMINUM 6063-T5 .060" THICK MINIMUM
19. GEOMETRIC SHAPES ARE ALSO APPROVED. APPROVED GEOMETRIC SHAPES DIMENSIONS SHALL NOT EXCEED INSCRIBED DIMENSIONS OF APPROVED RECTANGULAR ASSEMBLY SHOWN IN SHEET 2. GEOMETRIC SHAPES ARE NOT LIMITED TO SHAPES SHOWN HEREIN.
20. THIS PRODUCT IS ALSO LABELED UNDER THE FOLLOWING NAMES: 3500PW, 3500PWCHS, 3500PWMULL, 3500SP, 3540PW, 3540PWMULL, 3540PWCHS, 3540SP, 3580PW, 3580PWMULL, 3580SP, S-3500PW, S-3500PWMULL, S-3500PWCHS, S-3500SP, S-3540PW, S-3540SP, S-3540PWCHS, 1255PW, 1255PWCHS, 1255PWMULL, 1280PW, 910SP, 3500HPPW, 3500HPPWMULL AND 3500HPSP.

SIGNED: 02/28/2020

TABLE OF CONTENTS	
SHEET NO.	DESCRIPTION
1	NOTES
2	ELEVATIONS
3	NUMBER OF ANCHORS CHARTS
4 – 11	INSTALLATION DETAILS
12	COMPONENTS

MI WINDOWS & DOORS, LLC.
650 WEST MARKET STREET
GRATZ, PA 17030-0370
SERIES 3500 PICTURE WINDOW
60" X 96" NON-IMPACT
NOTES
DRAWN: N.G. | DWG NO. 08-02858 | REV A
SCALE NTS | DATE 02/02/16 | SHEET 1 OF 12
L. ROBERTO LOMAS P.E.
1432 WOODFORD RD LEWISVILLE, NC 27023
434-688-0609 rllomas@lrlomaspe.com
LUIS R. LOMAS LICENSE No. 62514 STATE OF FLORIDA PROFESSIONAL ENGINEER
Luis R. Lomas P.E.
FL No.: 62514

REVISIONS			
REV	DESCRIPTION	DATE	APPROVED
A	ADDED FIN INSTALLATION	10/22/19	R.L.

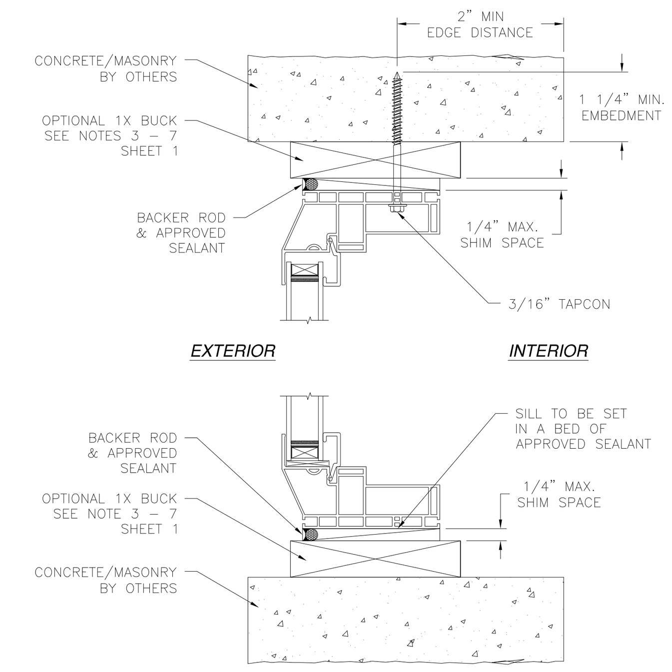

VERTICAL CROSS SECTION
CONCRETE/MASONRY INSTALLATION

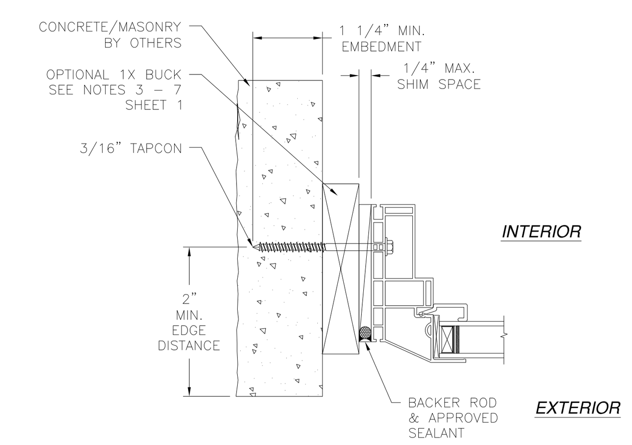

JAMB INSTALLATION DETAIL
CONCRETE/MASONRY INSTALLATION

NOTES:
1. INTERIOR AND EXTERIOR FINISHES, BY OTHERS, NOT SHOWN FOR CLARITY.
2. PERIMETER AND JOINT SEALANT BY OTHERS TO BE DESIGNED IN ACCORDANCE WITH ASTM E2112

SIGNED: 02/28/2020

MI WINDOWS & DOORS, LLC.
650 WEST MARKET STREET
GRATZ, PA 17030-0370
SERIES 3500 PICTURE WINDOW
60" X 96" NON-IMPACT
INSTALLATION DETAILS
DRAWN: N.G. | DWG NO. 08-02858 | REV A
SCALE NTS | DATE 02/02/16 | SHEET 5 OF 12
L. ROBERTO LOMAS P.E.
1432 WOODFORD RD LEWISVILLE, NC 27023
434-688-0609 rllomas@lrlomaspe.com
Luis R. Lomas P.E.
FL No.: 62514

REVISIONS			
REV	DESCRIPTION	DATE	APPROVED
A	ADDED FIN INSTALLATION	10/22/19	R.L.

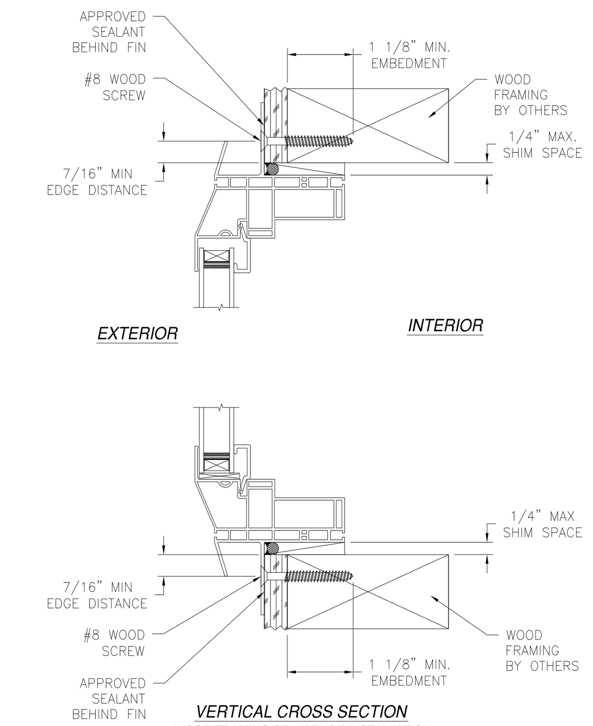

VERTICAL CROSS SECTION
WOOD FRAMING OR 2X BUCK INSTALLATION

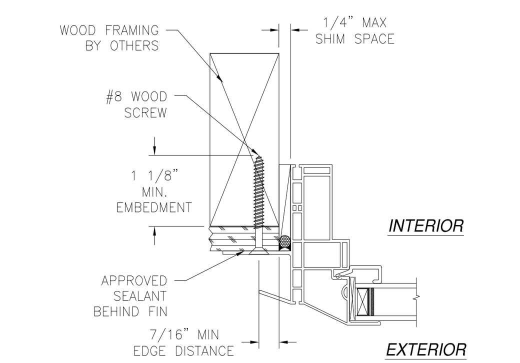

JAMB INSTALLATION DETAIL
WOOD FRAMING OR 2X BUCK INSTALLATION

NOTES:
1. INTERIOR AND EXTERIOR FINISHES, BY OTHERS, NOT SHOWN FOR CLARITY.
2. PERIMETER AND JOINT SEALANT BY OTHERS TO BE DESIGNED IN ACCORDANCE WITH ASTM E2112

SIGNED: 02/28/2020

MI WINDOWS & DOORS, LLC.
650 WEST MARKET STREET
GRATZ, PA 17030-0370
SERIES 3500 PICTURE WINDOW
60" X 96" NON-IMPACT
FIN INSTALLATION DETAILS W/J-CHANNEL
DRAWN: N.G. | DWG NO. 08-02858 | REV A
SCALE NTS | DATE 02/02/16 | SHEET 10 OF 12
L. ROBERTO LOMAS P.E.
1432 WOODFORD RD LEWISVILLE, NC 27023
434-688-0609 rllomas@lrlomaspe.com
Luis R. Lomas P.E.
FL No.: 62514

REVISIONS			
REV	DESCRIPTION	DATE	APPROVED
A	ADDED FIN INSTALLATION	10/22/19	R.L.

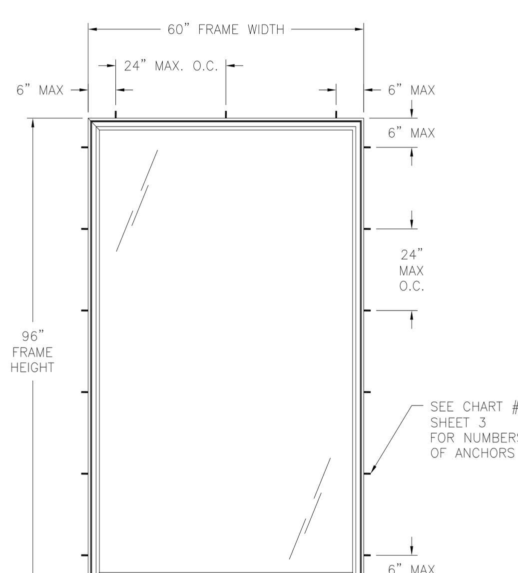

SERIES 3500 PICTURE WINDOW
EXTERIOR VIEW
FINLESS & FLANGE INSTALLATION

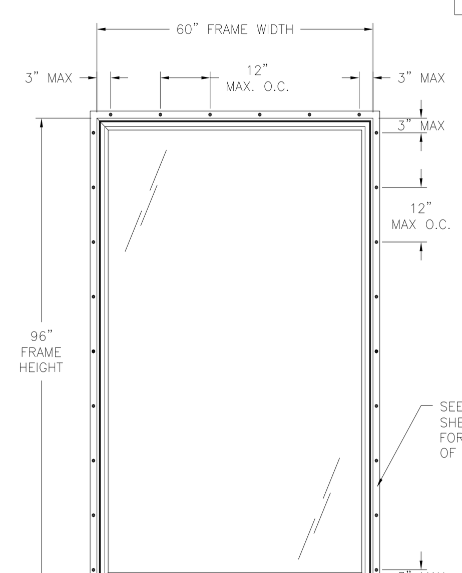

SERIES 3500 PICTURE WINDOW
EXTERIOR VIEW
FIN INSTALLATION

DESIGN PRESSURE RATING	IMPACT RATING
±50.0PSF	NONE

60" X 96" FRAME SIZE SHOWN. OTHER SIZES ARE APPROVED AS LONG AS INDIVIDUAL FRAME AREA DOES NOT EXCEED 40.0 FT²

NOTES:
1. MAXIMUM D.L.O.: 56" X 92"
2. (2) 1/4" X 1/2" WEEPSLOT AT 2 1/2" FROM END GLAZING CHANNEL.
3. (2) 1" X 1/8" WEEPSLOT AT 2 1/2" FROM EDGE OF SILL FACE

SIGNED: 02/28/2020

MI WINDOWS & DOORS, LLC.
650 WEST MARKET STREET
GRATZ, PA 17030-0370
SERIES 3500 PICTURE WINDOW
60" X 96" NON-IMPACT
ELEVATIONS
DRAWN: N.G. | DWG NO. 08-02858 | REV A
SCALE NTS | DATE 02/02/16 | SHEET 2 OF 12
L. ROBERTO LOMAS P.E.
1432 WOODFORD RD LEWISVILLE, NC 27023
434-688-0609 rllomas@lrlomaspe.com
Luis R. Lomas P.E.
FL No.: 62514

REVISIONS			
REV	DESCRIPTION	DATE	APPROVED
A	ADDED FIN INSTALLATION	10/22/19	R.L.

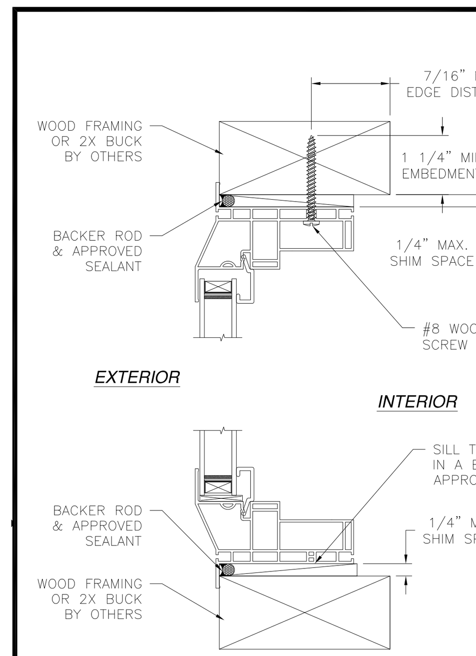

VERTICAL CROSS SECTION
WOOD FRAMING OR 2X BUCK INSTALLATION

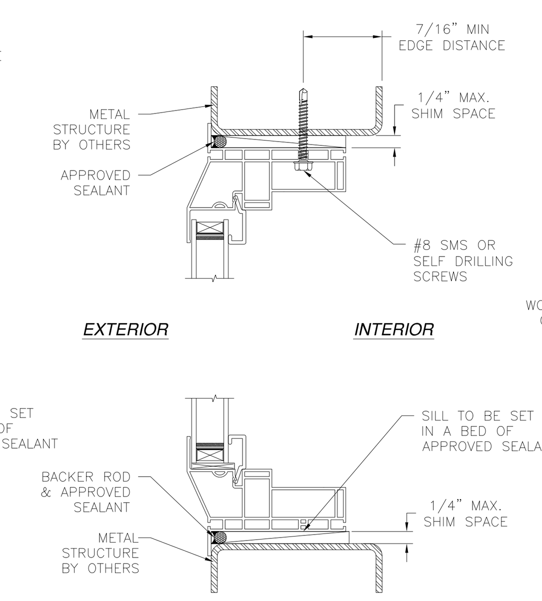

VERTICAL CROSS SECTION
METAL STRUCTURE INSTALLATION

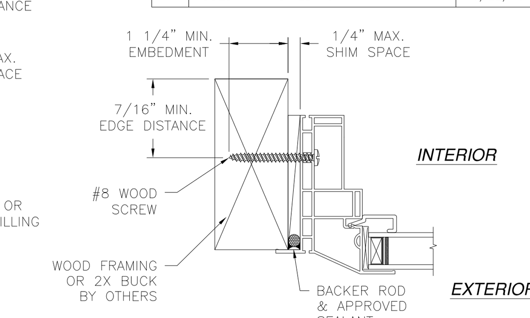

JAMB INSTALLATION DETAIL
WOOD FRAMING OR 2X BUCK INSTALLATION

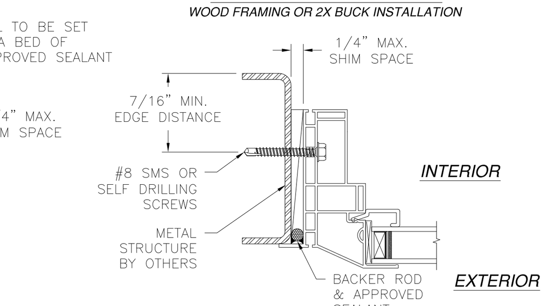

JAMB INSTALLATION DETAIL
METAL STRUCTURE INSTALLATION

NOTES:
1. INTERIOR AND EXTERIOR FINISHES, BY OTHERS, NOT SHOWN FOR CLARITY.
2. PERIMETER AND JOINT SEALANT BY OTHERS TO BE DESIGNED IN ACCORDANCE WITH ASTM E2112

SIGNED: 02/28/2020

MI WINDOWS & DOORS, LLC.
650 WEST MARKET STREET
GRATZ, PA 17030-0370
SERIES 3500 PICTURE WINDOW
60" X 96" NON-IMPACT
INSTALLATION DETAILS W/FLANGE
DRAWN: N.G. | DWG NO. 08-02858 | REV A
SCALE NTS | DATE 02/02/16 | SHEET 6 OF 12
L. ROBERTO LOMAS P.E.
1432 WOODFORD RD LEWISVILLE, NC 27023
434-688-0609 rllomas@lrlomaspe.com
Luis R. Lomas P.E.
FL No.: 62514

REVISIONS			
REV	DESCRIPTION	DATE	APPROVED
A	ADDED FIN INSTALLATION	10/22/19	R.L.

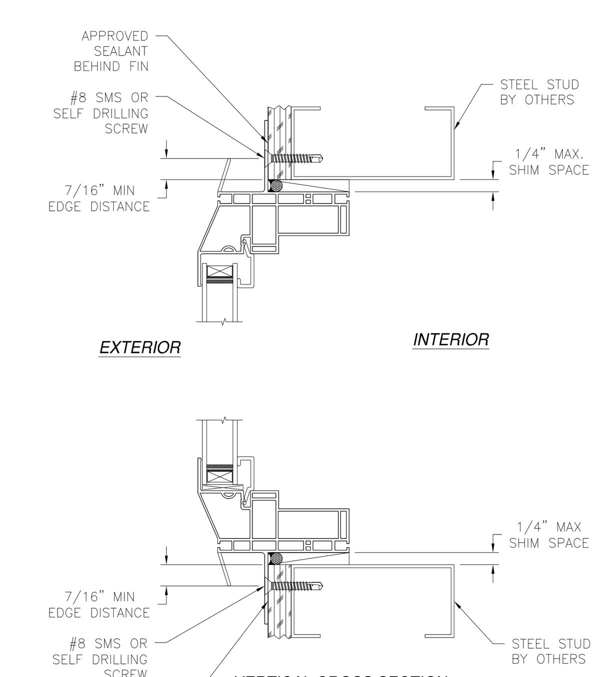

VERTICAL CROSS SECTION
STEEL STUDS INSTALLATION

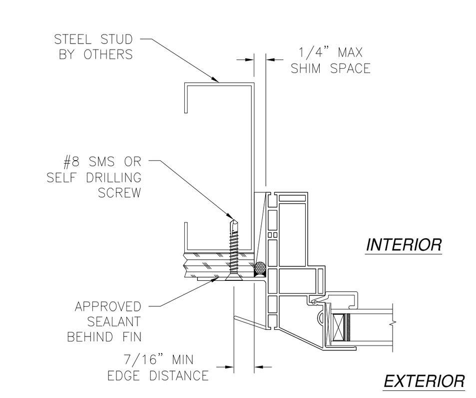

JAMB INSTALLATION DETAIL
STEEL STUDS INSTALLATION

NOTES:
1. INTERIOR AND EXTERIOR FINISHES, BY OTHERS, NOT SHOWN FOR CLARITY.
2. PERIMETER AND JOINT SEALANT BY OTHERS TO BE DESIGNED IN ACCORDANCE WITH ASTM E2112

SIGNED: 02/28/2020

MI WINDOWS & DOORS, LLC.
650 WEST MARKET STREET
GRATZ, PA 17030-0370
SERIES 3500 PICTURE WINDOW
60" X 96" NON-IMPACT
FIN INSTALLATION DETAILS W/J-CHANNEL
DRAWN: N.G. | DWG NO. 08-02858 | REV A
SCALE NTS | DATE 02/02/16 | SHEET 11 OF 12
L. ROBERTO LOMAS P.E.
1432 WOODFORD RD LEWISVILLE, NC 27023
434-688-0609 rllomas@lrlomaspe.com
Luis R. Lomas P.E.
FL No.: 62514

REVISIONS			
REV	DESCRIPTION	DATE	APPROVED
A	ADDED FIN INSTALLATION	10/22/19	R.L.

Chart #1
Number of anchor locations required

Frame Height (in)	24.00 Head	24.00 Jamb	30.00 Head	30.00 Jamb	36.00 Head	36.00 Jamb	42.00 Head	42.00 Jamb	48.00 Head	48.00 Jamb	54.00 Head	54.00 Jamb	60.00 Head	60.00 Jamb	66.00 Head	66.00 Jamb	72.00 Head	72.00 Jamb	78.00 Head	78.00 Jamb	84.00 Head	84.00 Jamb	90.00 Head	90.00 Jamb	96.00 Head	96.00 Jamb
24.00	2	2	2	2	2	2	3	2	3	2	3	2	3	2	4	2	4	2	4	2	4	2	5	2	5	2
30.00	2	2	2	2	2	2	3	2	3	2	3	2	3	2	4	2	4	2	4	2	4	2	5	2	5	2
36.00	2	2	2	2	2	2	3	2	3	2	3	2	3	2	4	2	4	2	4	2	4	2	5	2	5	2
42.00	2	3	2	3	2	3	3	3	3	3	3	3	3	3	4	3	4	3	4	3	4	3	5	3	5	3
48.00	2	3	2	3	2	3	3	3	3	3	3	3	3	3	4	3	4	3	4	3	4	3	5	3	5	3
54.00	2	3	2	3	2	3	3	3	3	3	3	3	3	3	4	3	4	3	4	3	4	3	5	3	5	3
60.00	2	3	2	3	2	3	3	3	3	3	3	3	3	3	4	3	4	3	4	3	5	3	5	3	6	3
66.00	2	4	2	4	2	4	3	4	3	4	3	4	3	4	4	4	4	4	4	4	5	4	5	4	6	4
72.00	2	4	2	4	2	4	3	4	3	4	3	4	3	4	4	4	4	4	4	4	5	4	5	4	6	4
78.00	2	4	2	4	2	4	3	4	3	4	3	4	3	4	4	4	4	4	4	4	5	4	6	4	6	4
84.00	2	4	2	4	2	4	3	4	3	4	3	4	3	5	4	5	4	5	4	5	5	5	6	5	6	5
90.00	2	5	2	5	2	5	3	5	3	5	3	5	3	5	4	5	4	5	4	6	5	6	6	6	6	6
96.00	2	5	2	5	2	5	3	5	3	5	3	5	3	6	4	6	4	6	4	6	5	6	6	6	6	6

Chart #2
Number of anchor locations required

Frame Height (in)	24.00 H & S	24.00 Jamb	30.00 H & S	30.00 Jamb	36.00 H & S	36.00 Jamb	42.00 H & S	42.00 Jamb	48.00 H & S	48.00 Jamb	54.00 H & S	54.00 Jamb	60.00 H & S	60.00 Jamb	66.00 H & S	66.00 Jamb	72.00 H & S	72.00 Jamb	78.00 H & S	78.00 Jamb	84.00 H & S	84.00 Jamb	90.00 H & S	90.00 Jamb	96.00 H & S	96.00 Jamb
24.00	3	3	3	3	4	3	4	3	5	3	5	3	6	3	6	3	7	3	7	3	8	3	8	3	9	3
30.00	3	3	3	3	4	3	4	3	5	3	5	3	6	3	6	3	7	3	7	3	8	3	8	3	9	3
36.00	3	4	3	4	4	4	4	4	5	4	5	4	6	4	6	4	7	4	7	4	8	4	8	4	9	4
42.00	3	4	3	4	4	4	4	4	5	4	5	4	6	4	6	4	7	4	7	4	8	4	8	4	9	4
48.00	3	5	3	5	4	5	4	5	5	5	5	5	6	5	6	5	7	5	7	5	8	5	8	5	9	5
54.00	3	5	3	5	4	5	4	5	5	5	5	5	6	5	6	5	7	5	7	5	8	5	8	5	9	5
60.00	3	6	3	6	4	6	4	6	5	6	5	6	6	6	6	6	7	6	7	6	8	6	8	6	9	6
66.00	3	6	3	6	4	6	4	6	5	6	5	6	6	6	6	6	7	6	7	6	8	6	8	6	9	6
72.00	3	7	3	7	4	7	4	7	5	7	5	7	6	7	6	7	7	7	7	7	8	7	8	7	9	7
78.00	3	7	3	7	4	7	4	7	5	7	5	7	6	7	6	7	7	7	7	7	8	7	8	7	9	7
84.00	3	8	3	8	4	8	4	8	5	8	5	8	6	8	6	8	7	8	7	8	8	8	8	8	9	8
90.00	3	8	3	8	4	8	4	8	5	8	5	8	6	8	6	8	7	8	7	8	8	8	8	8	9	8
96.00	3	9	3	9	4	9	4	9	5	9	5	9	6	9	6	9	7	9	7	9	8	9	8	9	9	9

SIGNED: 02/28/2020

MI WINDOWS & DOORS, LLC.
650 WEST MARKET STREET
GRATZ, PA 17030-0370
SERIES 3500 PICTURE WINDOW
60" X 96" NON-IMPACT
NUMBER OF ANCHORS CHARTS
DRAWN: N.G. | DWG NO. 08-02858 | REV A
SCALE NTS | DATE 02/02/16 | SHEET 3 OF 12
L. ROBERTO LOMAS P.E.
1432 WOODFORD RD LEWISVILLE, NC 27023
434-688-0609 rllomas@lrlomaspe.com
Luis R. Lomas P.E.
FL No.: 62514

REVISIONS			
REV	DESCRIPTION	DATE	APPROVED
A	ADDED FIN INSTALLATION	10/22/19	R.L.

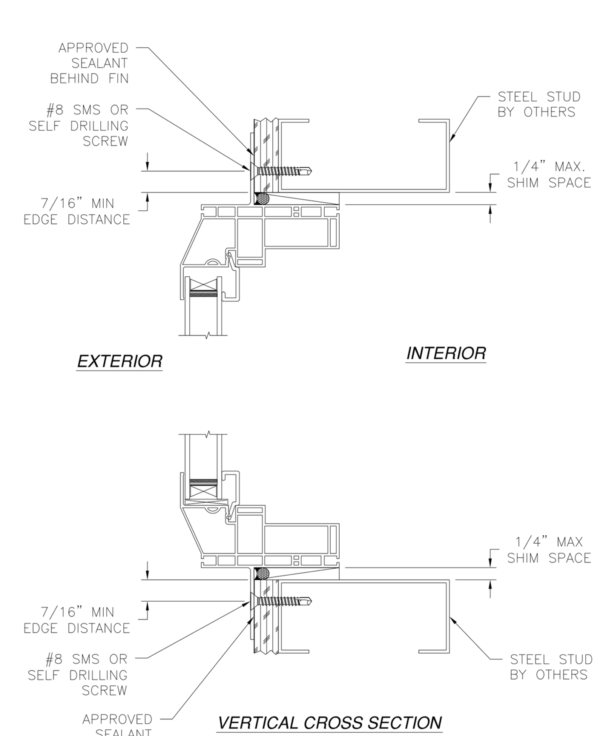

VERTICAL CROSS SECTION
STEEL STUDS INSTALLATION

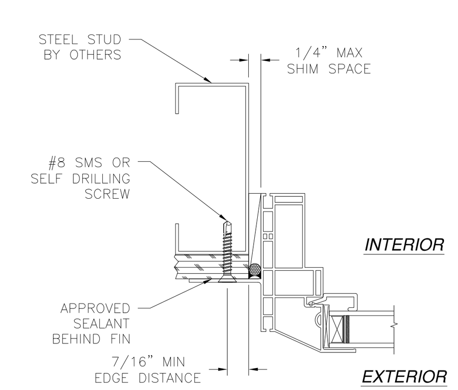

JAMB INSTALLATION DETAIL
STEEL STUDS INSTALLATION

NOTES:
1. INTERIOR AND EXTERIOR FINISHES, BY OTHERS, NOT SHOWN FOR CLARITY.
2. PERIMETER AND JOINT SEALANT BY OTHERS TO BE DESIGNED IN ACCORDANCE WITH ASTM E2112

SIGNED: 02/28/2020

MI WINDOWS & DOORS, LLC.
650 WEST MARKET STREET
GRATZ, PA 17030-0370
SERIES 3500 PICTURE WINDOW
60" X 96" NON-IMPACT
FIN INSTALLATION DETAILS
DRAWN: N.G. | DWG NO. 08-02858 | REV A
SCALE NTS | DATE 02/02/16 | SHEET 9 OF 12
L. ROBERTO LOMAS P.E.
1432 WOODFORD RD LEWISVILLE, NC 27023
434-688-0609 rllomas@lrlomaspe.com
Luis R. Lomas P.E.
FL No.: 62514

REVISIONS			
REV	DESCRIPTION	DATE	APPROVED
A	ADDED FIN INSTALLATION	10/22/19	R.L.

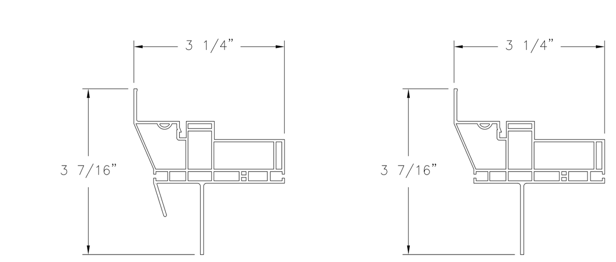

MAIN FRAME
FIN INSTALLATION W/ J-CHANNEL
EXTRUDED RIGID PVC (V-538)

MAIN FRAME
FIN INSTALLATION
EXTRUDED RIGID PVC (V-634)

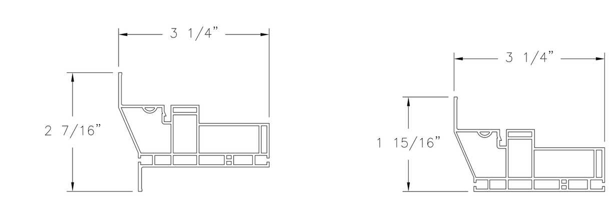

MAIN FRAME W/FLANGE
EXTRUDED RIGID PVC (V-768)

MAIN FRAME
EXTRUDED RIGID PVC (V-915)

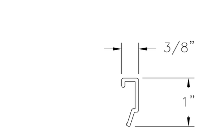

GLAZING BEAD
EXTRUDED RIGID PVC (V-819)

SIGNED: 02/28/2020

MI WINDOWS & DOORS, LLC.
650 WEST MARKET STREET
GRATZ, PA 17030-0370
SERIES 3500 PICTURE WINDOW
60" X 96" NON-IMPACT
COMPONENTS
DRAWN: N.G. | DWG NO. 08-02858 | REV A
SCALE NTS | DATE 02/02/16 | SHEET 12 OF 12
L. ROBERTO LOMAS P.E.
1432 WOODFORD RD LEWISVILLE, NC 27023
434-688-0609 rllomas@lrlomaspe.com
Luis R. Lomas P.E.
FL No.: 62514

Product Approval
FL 18644.3

PRODUCT REL. DATE
Revised to 20230 8th Edition Code
REVISIONS : 1 2 3 4 5 6 7 8

Maronda Homes
4005 MARONDA WAY
SANFORD, FL 32771
(407) 321-0064

FLORIDA:
THIS STRUCTURE WAS DESIGNED IN ACCORDANCE AND MEETS THE REQUIREMENTS OF SECTION R301 OF THE FLORIDA BUILDING CODE 8th EDITION (2023) : RESIDENTIAL. ALL CONNECTORS HAVE BEEN CHECK'D TO WITHSTAND ALL APPLICABLE LOADS AND DESIGN CRITERIA STATED ON THE COVER SHEET.

DESIGNED WIND SPEED
Vult = 160 MPH
Vasd = 124 MPH

Manufacture
MI Windows

RELEASE DATE:

SHEET:
WIN - 3

FL_GSE