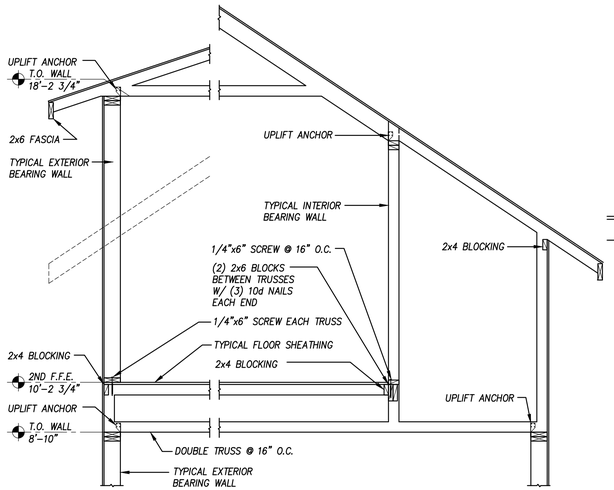


V **Roof Section**
1/2" = 1'-0" WOOD-R010

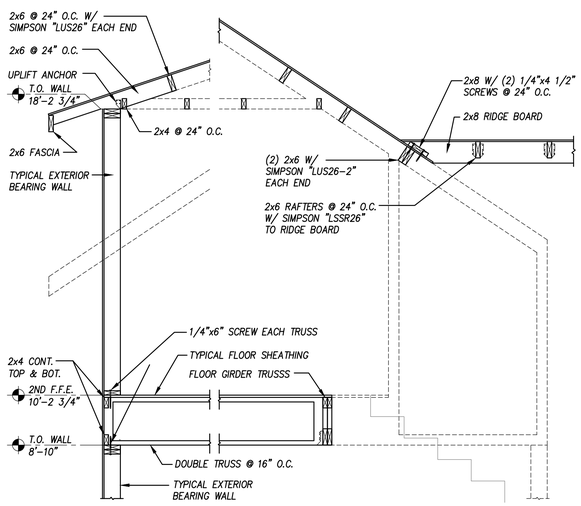


W **Roof Section**
1/2" = 1'-0" WOOD-R011

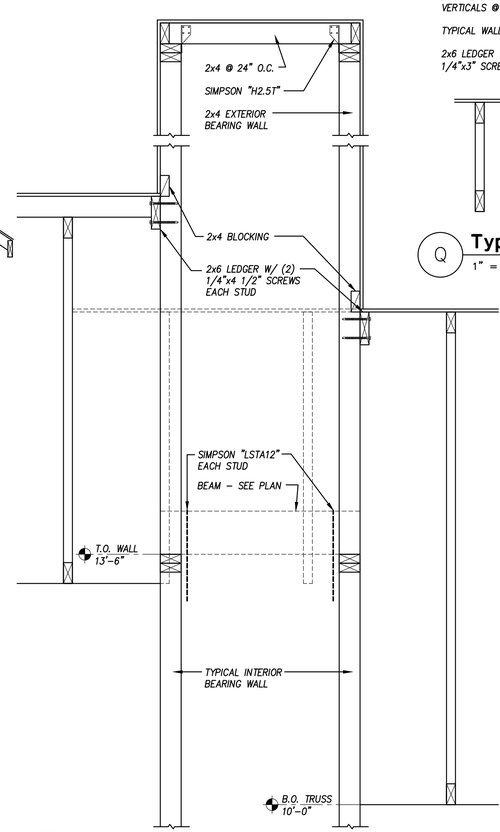


R **Roof Section**
1" = 1'-0" WOOD-R251

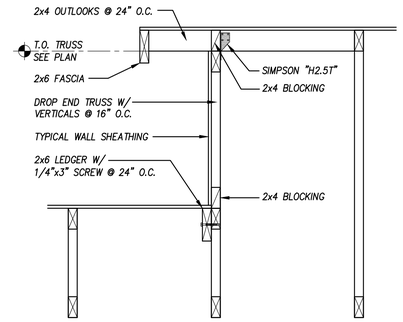


Q **Typical Roof Step**
1" = 1'-0" WOOD-R250Q

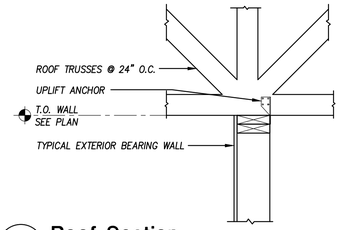


M **Roof Section**
1" = 1'-0" WOOD-R007

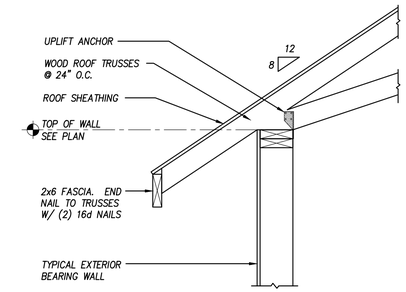


H **Roof Section**
1" = 1'-0" WOOD-R002

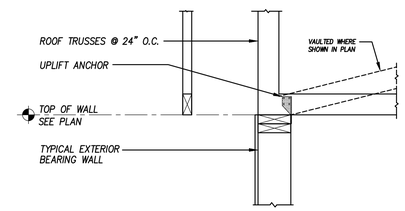


N **Roof Section**
1" = 1'-0" WOOD-R007Q

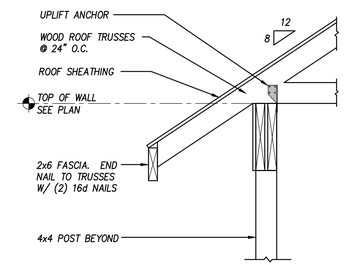


J **Roof Section**
1" = 1'-0" WOOD-R003

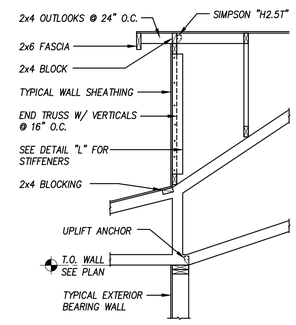


P **Roof Section**
1/2" = 1'-0" WOOD-R008

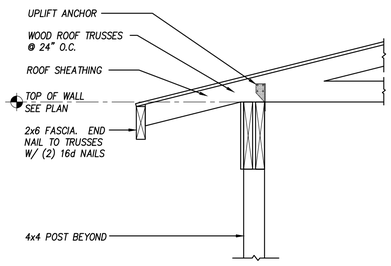


K **Roof Section**
1" = 1'-0" WOOD-R004

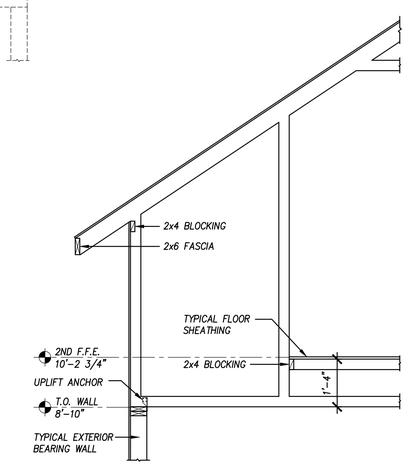


U **Roof Section**
1/2" = 1'-0" WOOD-R009

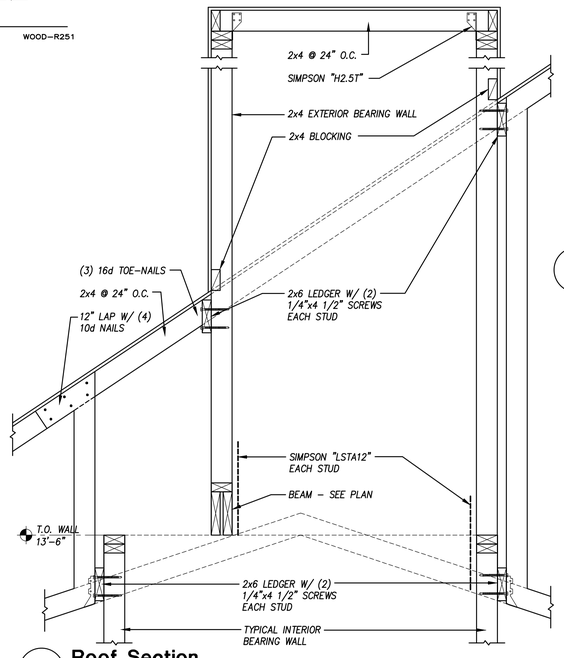


S **Roof Section**
1" = 1'-0" WOOD-R252

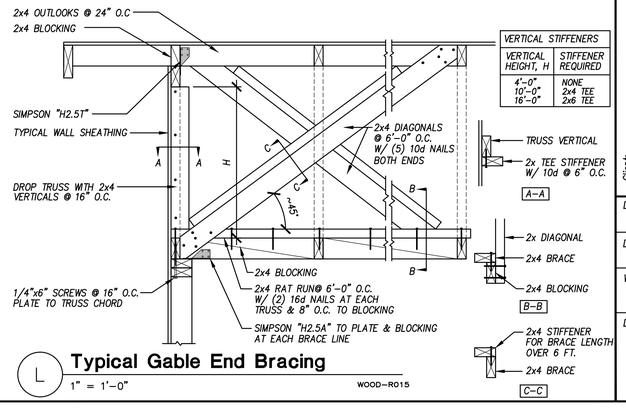


| VERTICAL STIFFENERS | |
|---|---|
| VERTICAL HEIGHT, H | STIFFENER REQUIRED |
| 4'-0" | NONE |
| 10'-0" | 2x4 TEE |
| 16'-0" | 2x6 TEE |

L **Typical Gable End Bracing**
1" = 1'-0" WOOD-R015

Columbia County Building Department
Plans Reviewed for Code Compliance
State of Florida

Drawing Status: **For Permit & Construction**

| Rev. No.: | Date: | Description: |
|---|---|---|
| | | |


WSE WAYLAND
STRUCTURAL ENGINEERING
2801 SW 81st Street Gainesville, FL 32608
Phone: 352-317-4120
Email: wsl@wsegroup.com
Florida COA: #8436


GS WAYLAND LICENSE No. 54586 STATE OF FLORIDA PROFESSIONAL ENGINEER

Gregory S Wayland
2025.03.31
11:32:28-04'00'

This item has been signed and sealed using Digital Signature. Printed copies of this document are not considered signed and sealed and the authentication code must be verified on any electronic copies.

Client: **Chase Gainey**

Project Name: **Gainey Residence 3181 SW CR 138 Fort White, FL 32038**

Drawing Name: **Structural Details**

Drawn by: GS WAYLAND

Date: MARCH 31, 2025

WSE Project No.: **24109**

Drawing No. **S2**