Lumber design values are in accordance with ANSI/TPI 1 section 6.3
These truss designs rely on lumber values established by others.

RE: 3371626 - CJ CONST. - CADY RES.

MiTek USA, Inc.
16023 Swingley Ridge Rd
Chesterfield, MO 63017

Site Information:

Customer Info: CHARLES JOHNSON CONST. Project Name: Cady Res. Model: Custom
Lot/Block: N/A Subdivision: N/A
Address: 433 SW Finley Little Lane, N/A
City: Columbia Cty State: FL

Name Address and License # of Structural Engineer of Record, If there is one, for the building.

Name: License #:
Address:
City: State:

General Truss Engineering Criteria & Design Loads (Individual Truss Design Drawings Show Special Loading Conditions):

Design Code: FBC2020/TPI2014 Design Program: MiTek 20/20 8.5
Wind Code: ASCE 7-16 Wind Speed: 130 mph
Roof Load: 37.0 psf Floor Load: N/A psf

This package includes 40 individual, Truss Design Drawings and 0 Additional Drawings.
With my seal affixed to this sheet, I hereby certify that I am the Truss Design Engineer and this index sheet conforms to 61G15-31.003, section 5 of the Florida Board of Professional Engineers Rules.

No.	Seal#	Truss Name	Date	No.	Seal#	Truss Name	Date
1	T30317741	EJ01	4/14/23	15	T30317755	T07	4/14/23
2	T30317742	PB01	4/14/23	16	T30317756	T08	4/14/23
3	T30317743	PB01G	4/14/23	17	T30317757	T09	4/14/23
4	T30317744	PB02	4/14/23	18	T30317758	T10	4/14/23
5	T30317745	PB03	4/14/23	19	T30317759	T10G	4/14/23
6	T30317746	PB03G	4/14/23	20	T30317760	T11	4/14/23
7	T30317747	T01	4/14/23	21	T30317761	T12	4/14/23
8	T30317748	T01G	4/14/23	22	T30317762	T13	4/14/23
9	T30317749	T02	4/14/23	23	T30317763	T13G	4/14/23
10	T30317750	T03	4/14/23	24	T30317764	T14	4/14/23
11	T30317751	T04	4/14/23	25	T30317765	T14G	4/14/23
12	T30317752	T05	4/14/23	26	T30317766	T15	4/14/23
13	T30317753	T06	4/14/23	27	T30317767	T16	4/14/23
14	T30317754	T06G	4/14/23	28	T30317768	T17	4/14/23

This item has been electronically signed and sealed by ORegan, Philip, PE using a Digital Signature.
Printed copies of this document are not considered signed and sealed and the signature must be verified on any electronic copies

The truss drawing(s) referenced above have been prepared by MiTek USA, Inc. under my direct supervision based on the parameters provided by Builders FirstSource-Lake City, FL.

Truss Design Engineer's Name: ORegan, Philip
My license renewal date for the state of Florida is February 28, 2025.

IMPORTANT NOTE: The seal on these truss component designs is a certification that the engineer named is licensed in the jurisdiction(s) identified and that the designs comply with ANSI/TPI 1. These designs are based upon parameters shown (e.g., loads, supports, dimensions, shapes and design codes), which were given to MiTek or TRENCO. Any project specific information included is for MiTek's or TRENCO's customers file reference purpose only, and was not taken into account in the preparation of these designs. MiTek or TRENCO has not independently verified the applicability of the design parameters or the designs for any particular building. Before use, the building designer should verify applicability of design parameters and properly incorporate these designs into the overall building design per ANSI/TPI 1, Chapter 2.

PHILIP J. O'REGAN
LICENSE
No 58126
STATE OF FLORIDA
PROFESSIONAL ENGINEER

Philip J. O'Regan PE No.58126
MiTek Inc. DBA MiTek USA FL Cert 6634
16023 Swingley Ridge Rd. Chesterfield, MO 63017
Date:

April 14,2023

ORegan, Philip

RE: 3371626 - CJ CONST. - CADY RES.

MiTek USA, Inc.
16023 Swingley Ridge Rd
Chesterfield, MO 63017

Site Information:

Customer Info: CHARLES JOHNSON CONST. Project Name: Cady Res. Model: Custom
Lot/Block: N/A Subdivision: N/A
Address: 433 SW Finley Little Lane, N/A
City: Columbia Cty State: FL

No.	Seal#	Truss Name	Date
29	T30317769	T18	4/14/23
30	T30317770	T18G	4/14/23
31	T30317771	TG01	4/14/23
32	T30317772	TG02	4/14/23
33	T30317773	V01	4/14/23
34	T30317774	V02	4/14/23
35	T30317775	V03	4/14/23
36	T30317776	V04	4/14/23
37	T30317777	V05	4/14/23
38	T30317778	V06	4/14/23
39	T30317779	V07	4/14/23
40	T30317780	V08	4/14/23

Job	Truss	Truss Type	Qty	Ply	CJ CONST. - CADY RES.
3371626	EJ01	Jack-Open	19	1	T30317741 Job Reference (optional)

Builders FirstSource (Lake City,FL), Lake City, FL - 32055, 8.530 s Mar 9 2023 MiTek Industries, Inc. Thu Apr 13 14:24:43 2023 Page 1
ID:Ys8zlwKNmTR0LjtaCjYR7AyUufK-xcLxjsuqI4QA_WMiuzv6EQx2JHHNyY2oTBY5RXzR642

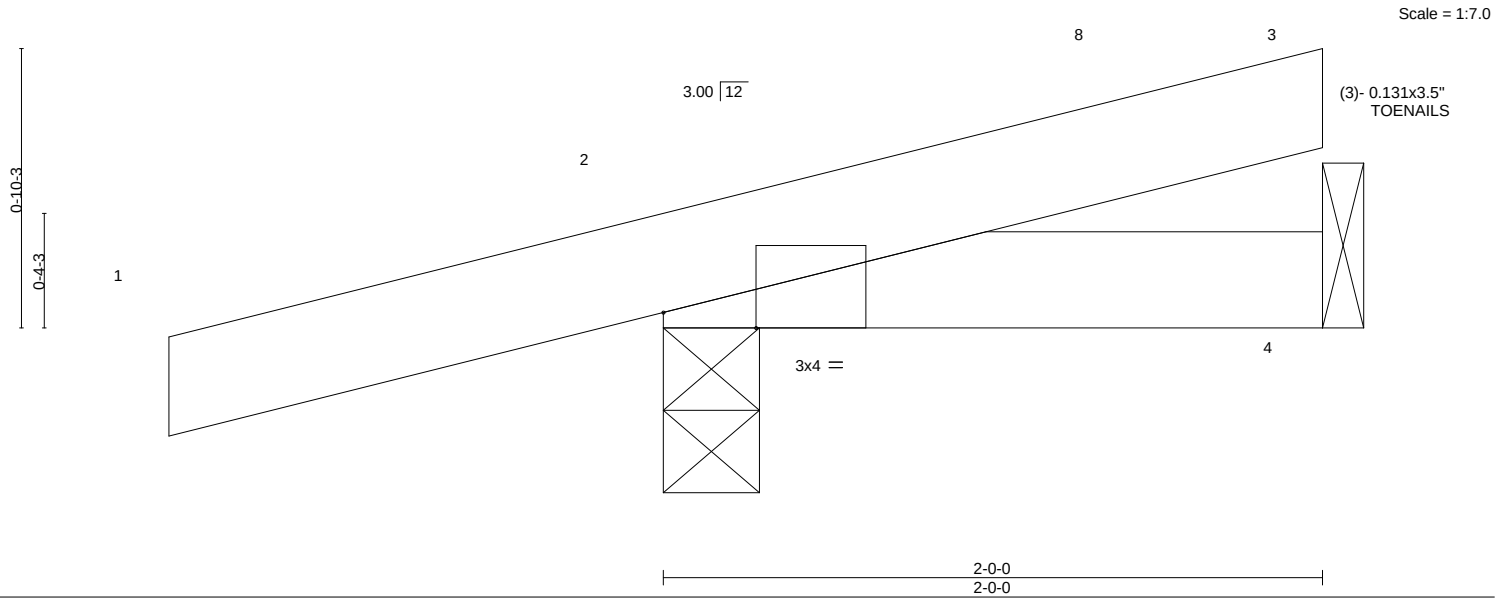

Plate Offsets (X,Y)-- [2:0-3-6,Edge]

LOADING (psf)		SPACING- 2-0-0		CSI.		DEFL. in (loc) l/defl L/d		PLATES GRIP
TCLL	20.0	Plate Grip DOL	1.25	TC	0.12	Vert(LL) -0.00 7 >999 240		MT20 244/190
TCDL	7.0	Lumber DOL	1.25	BC	0.07	Vert(CT) -0.00 7 >999 180		
BCLL	0.0 *	Rep Stress Incr	YES	WB	0.00	Horz(CT) 0.00 4 n/a n/a		
BCDL	10.0	Code FBC2020/TPI2014		Matrix-MP				Weight: 8 lb FT = 20%

LUMBER-
TOP CHORD 2x4 SP No.2
BOT CHORD 2x4 SP No.2

BRACING-
TOP CHORD Structural wood sheathing directly applied or 2-0-0 oc purlins.
BOT CHORD Rigid ceiling directly applied or 10-0-0 oc bracing.

REACTIONS. (size) 2=0-3-8, 4=Mechanical
Max Horz 2=33(LC 8)
Max Uplift 2=-95(LC 8), 4=-14(LC 9)
Max Grav 2=185(LC 1), 4=46(LC 3)

FORCES. (lb) - Max. Comp./Max. Ten. - All forces 250 (lb) or less except when shown.

NOTES-
1) Wind: ASCE 7-16; Vult=130mph (3-second gust) Vasd=101mph; TCDL=4.2psf; BCDL=3.0psf; h=20ft; Cat. II; Exp B; Encl., GCpi=0.18; MWFRS (envelope) gable end zone and C-C Exterior(2E) -1-6-0 to 1-6-0, Interior(1) 1-6-0 to 2-0-0 zone;C-C for members and forces & MWFRS for reactions shown; Lumber DOL=1.60 plate grip DOL=1.60
2) Building Designer / Project engineer responsible for verifying applied roof live load shown covers rain loading requirements specific to the use of this truss component.
3) This truss has been designed for a 10.0 psf bottom chord live load nonconcurrent with any other live loads.
4) * This truss has been designed for a live load of 20.0psf on the bottom chord in all areas where a rectangle 3-6-0 tall by 2-0-0 wide will fit between the bottom chord and any other members.
5) Refer to girder(s) for truss to truss connections.
6) Provide mechanical connection (by others) of truss to bearing plate capable of withstanding 100 lb uplift at joint(s) 2, 4.

This item has been electronically signed and sealed by ORegan, Philip, PE using a Digital Signature. Printed copies of this document are not considered signed and sealed and the signature must be verified on any electronic copies.

Philip J. O'Regan PE No.58126
MiTek Inc. DBA MiTek USA FL Cert 6634
16023 Swingley Ridge Rd. Chesterfield, MO 63017
Date:

April 14,2023

WARNING - Verify design parameters and READ NOTES ON THIS AND INCLUDED MITEK REFERENCE PAGE MII-7473 rev. 5/19/2020 BEFORE USE.
Design valid for use only with MiTek® connectors. This design is based only upon parameters shown, and is for an individual building component, not a truss system. Before use, the building designer must verify the applicability of design parameters and properly incorporate this design into the overall building design. Bracing indicated is to prevent buckling of individual truss web and/or chord members only. Additional temporary and permanent bracing is always required for stability and to prevent collapse with possible personal injury and property damage. For general guidance regarding the fabrication, storage, delivery, erection and bracing of trusses and truss systems, see ***ANSI/TPI1 Quality Criteria, DSB-89 and BCSI Building Component Safety Information*** available from Truss Plate Institute, 2670 Crain Highway, Suite 203 Waldorf, MD 20601

MiTek
16023 Swingley Ridge Rd
Chesterfield, MO 63017

Job	Truss	Truss Type	Qty	Ply	CJ CONST. - CADY RES.
3371626	PB01	Piggyback	25	1	T30317742 Job Reference (optional)

Builders FirstSource (Lake City,FL), Lake City, FL - 32055, 8.530 s Mar 9 2023 MiTek Industries, Inc. Thu Apr 13 14:24:44 2023 Page 1
ID:Ys8zlwKNmTR0LjtaCjYR7AyUufK-QovJxCvS3OY0cgxuShQLndTDrge6h_6xirHfz_zR641

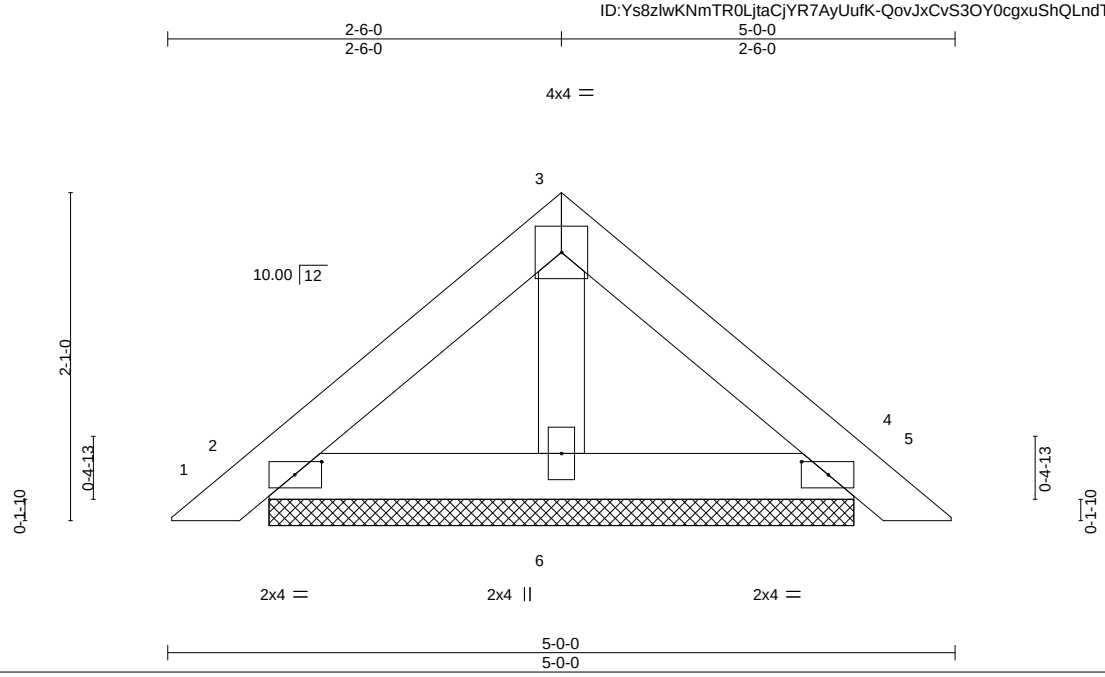

Plate Offsets (X,Y)-- [2:0-2-1,0-1-0], [4:0-2-1,0-1-0]

LOADING (psf)		SPACING-	2-0-0	CSI.		DEFL.	in	(loc)	l/defl	L/d	PLATES	GRIP
TCLL	20.0	Plate Grip DOL	1.25	TC	0.07	Vert(LL)	0.00	4	n/r	120	MT20	244/190
TCDL	7.0	Lumber DOL	1.25	BC	0.04	Vert(CT)	0.00	5	n/r	120		
BCLL	0.0 *	Rep Stress Incr	YES	WB	0.01	Horz(CT)	0.00	4	n/a	n/a		
BCDL	10.0	Code FBC2020/TPI2014		Matrix-P							Weight: 17 lb	FT = 20%

LUMBER-
TOP CHORD 2x4 SP No.2
BOT CHORD 2x4 SP No.2
OTHERS 2x4 SP No.3

BRACING-
TOP CHORD Structural wood sheathing directly applied or 5-0-0 oc purlins.
BOT CHORD Rigid ceiling directly applied or 10-0-0 oc bracing.

REACTIONS. (size) 2=3-8-9, 4=3-8-9, 6=3-8-9
Max Horz 2=-41(LC 10)
Max Uplift 2=-32(LC 12), 4=-37(LC 13), 6=-4(LC 12)
Max Grav 2=102(LC 1), 4=102(LC 1), 6=115(LC 1)

FORCES. (lb) - Max. Comp./Max. Ten. - All forces 250 (lb) or less except when shown.

NOTES-
1) Unbalanced roof live loads have been considered for this design.
2) Wind: ASCE 7-16; Vult=130mph (3-second gust) Vasd=101mph; TCDL=4.2psf; BCDL=3.0psf; h=20ft; Cat. II; Exp B; Encl., GCpi=0.18; MWFRS (envelope) gable end zone and C-C Exterior(2E) zone;C-C for members and forces & MWFRS for reactions shown; Lumber DOL=1.60 plate grip DOL=1.60
3) Building Designer / Project engineer responsible for verifying applied roof live load shown covers rain loading requirements specific to the use of this truss component.
4) Gable requires continuous bottom chord bearing.
5) This truss has been designed for a 10.0 psf bottom chord live load nonconcurrent with any other live loads.
6) * This truss has been designed for a live load of 20.0psf on the bottom chord in all areas where a rectangle 3-6-0 tall by 2-0-0 wide will fit between the bottom chord and any other members.
7) Provide mechanical connection (by others) of truss to bearing plate capable of withstanding 100 lb uplift at joint(s) 2, 4, 6.
8) See Standard Industry Piggyback Truss Connection Detail for Connection to base truss as applicable, or consult qualified building designer.

This item has been electronically signed and sealed by ORegan, Philip, PE using a Digital Signature. Printed copies of this document are not considered signed and sealed and the signature must be verified on any electronic copies.

Philip J. O'Regan PE No.58126
MiTek Inc. DBA MiTek USA FL Cert 6634
16023 Swingley Ridge Rd. Chesterfield, MO 63017
Date:

April 14,2023

WARNING - Verify design parameters and READ NOTES ON THIS AND INCLUDED MITEK REFERENCE PAGE MII-7473 rev. 5/19/2020 BEFORE USE.
Design valid for use only with MiTek® connectors. This design is based only upon parameters shown, and is for an individual building component, not a truss system. Before use, the building designer must verify the applicability of design parameters and properly incorporate this design into the overall building design. Bracing indicated is to prevent buckling of individual truss web and/or chord members only. Additional temporary and permanent bracing is always required for stability and to prevent collapse with possible personal injury and property damage. For general guidance regarding the fabrication, storage, delivery, erection and bracing of trusses and truss systems, see ***ANSI/TPI1 Quality Criteria, DSB-89 and BCSI Building Component Safety Information*** available from Truss Plate Institute, 2670 Crain Highway, Suite 203 Waldorf, MD 20601

MiTek
16023 Swingley Ridge Rd
Chesterfield, MO 63017

Job	Truss	Truss Type	Qty	Ply	CJ CONST. - CADY RES.
3371626	PB01G	PIGGYBACK	2	1	T30317743 Job Reference (optional)

Builders FirstSource (Lake City,FL), Lake City, FL - 32055, 8.530 s Mar 9 2023 MiTek Industries, Inc. Thu Apr 13 14:24:45 2023 Page 1
ID:Ys8zlwKNmTR0LjtaCjYR7AyUufK-u_Ti8Yw4qhgtDqW5?OxaJr0P54_aQRP5wV1CWQzR640

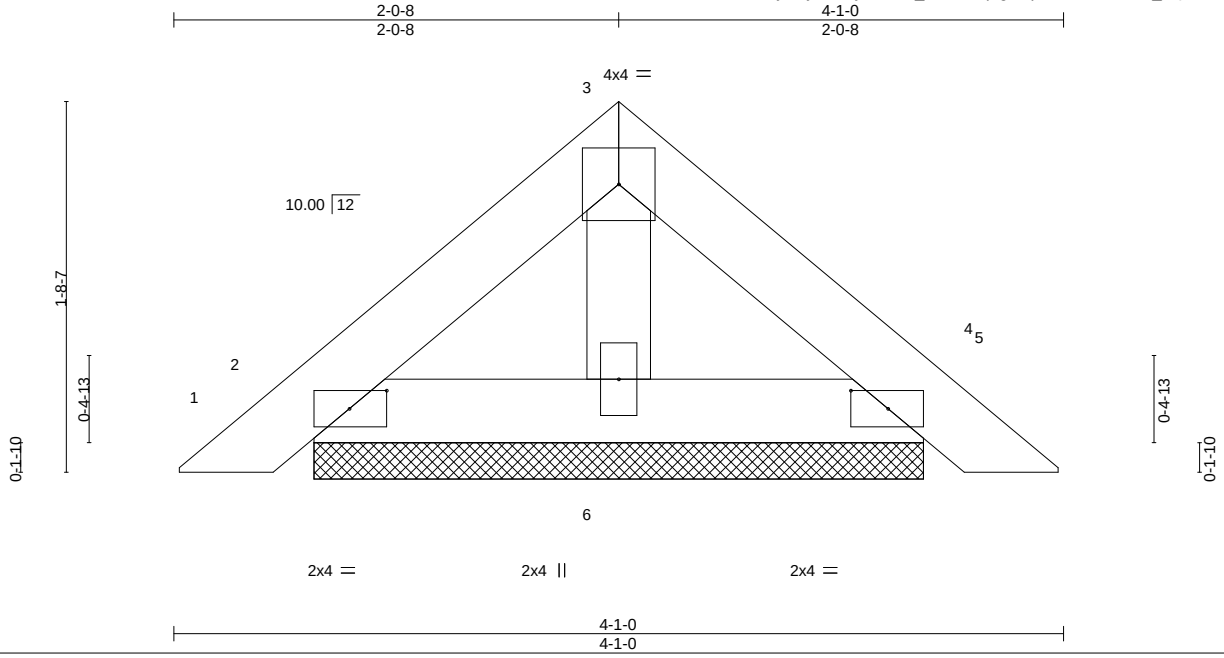

Plate Offsets (X,Y)-- [2:0-2-1,0-1-0], [4:0-2-1,0-1-0]

LOADING (psf)		SPACING-	2-0-0	CSI.		DEFL.	in	(loc)	l/defl	L/d	PLATES	GRIP
TCLL	20.0	Plate Grip DOL	1.25	TC	0.04	Vert(LL)	0.00	4	n/r	120	MT20	244/190
TCDL	7.0	Lumber DOL	1.25	BC	0.02	Vert(CT)	0.00	4	n/r	120		
BCLL	0.0 *	Rep Stress Incr	YES	WB	0.01	Horz(CT)	0.00	4	n/a	n/a		
BCDL	10.0	Code FBC2020/TPI2014		Matrix-P							Weight: 13 lb	FT = 20%

LUMBER-
TOP CHORD 2x4 SP No.2
BOT CHORD 2x4 SP No.2
OTHERS 2x4 SP No.3

BRACING-
TOP CHORD Structural wood sheathing directly applied or 4-1-0 oc purlins.
BOT CHORD Rigid ceiling directly applied or 10-0-0 oc bracing.

REACTIONS. (size) 2=2-9-9, 4=2-9-9, 6=2-9-9
Max Horz 2=-33(LC 10)
Max Uplift 2=-27(LC 12), 4=-31(LC 13), 6=-2(LC 12)
Max Grav 2=83(LC 1), 4=83(LC 1), 6=85(LC 1)

FORCES. (lb) - Max. Comp./Max. Ten. - All forces 250 (lb) or less except when shown.

NOTES-
1) Unbalanced roof live loads have been considered for this design.
2) Wind: ASCE 7-16; Vult=130mph (3-second gust) Vasd=101mph; TCDL=4.2psf; BCDL=3.0psf; h=20ft; Cat. II; Exp B; Encl., GCpi=0.18; MWFRS (envelope) gable end zone and C-C Exterior(2E) zone;C-C for members and forces & MWFRS for reactions shown; Lumber DOL=1.60 plate grip DOL=1.60
3) Building Designer / Project engineer responsible for verifying applied roof live load shown covers rain loading requirements specific to the use of this truss component.
4) Gable requires continuous bottom chord bearing.
5) This truss has been designed for a 10.0 psf bottom chord live load nonconcurrent with any other live loads.
6) * This truss has been designed for a live load of 20.0psf on the bottom chord in all areas where a rectangle 3-6-0 tall by 2-0-0 wide will fit between the bottom chord and any other members.
7) Provide mechanical connection (by others) of truss to bearing plate capable of withstanding 100 lb uplift at joint(s) 2, 4, 6.
8) See Standard Industry Piggyback Truss Connection Detail for Connection to base truss as applicable, or consult qualified building designer.

This item has been electronically signed and sealed by ORegan, Philip, PE using a Digital Signature. Printed copies of this document are not considered signed and sealed and the signature must be verified on any electronic copies.

Philip J. O'Regan PE No.58126
MiTek Inc. DBA MiTek USA FL Cert 6634
16023 Swingley Ridge Rd. Chesterfield, MO 63017
Date:

April 14,2023

WARNING - Verify design parameters and READ NOTES ON THIS AND INCLUDED MITEK REFERENCE PAGE MII-7473 rev. 5/19/2020 BEFORE USE.
Design valid for use only with MiTek® connectors. This design is based only upon parameters shown, and is for an individual building component, not a truss system. Before use, the building designer must verify the applicability of design parameters and properly incorporate this design into the overall building design. Bracing indicated is to prevent buckling of individual truss web and/or chord members only. Additional temporary and permanent bracing is always required for stability and to prevent collapse with possible personal injury and property damage. For general guidance regarding the fabrication, storage, delivery, erection and bracing of trusses and truss systems, see ***ANSI/TPI1 Quality Criteria, DSB-89 and BCSI Building Component Safety Information*** available from Truss Plate Institute, 2670 Crain Highway, Suite 203 Waldorf, MD 20601

MiTek
16023 Swingley Ridge Rd
Chesterfield, MO 63017

Job	Truss	Truss Type	Qty	Ply	CJ CONST. - CADY RES.
3371626	PB02	Piggyback	4	1	T30317744 Job Reference (optional)

Builders FirstSource (Lake City,FL), Lake City, FL - 32055, 8.530 s Mar 9 2023 MiTek Industries, Inc. Thu Apr 13 14:24:46 2023 Page 1
ID:Ys8zlwKNmTR0LjtaCjYR7AyUufK-MB04Muxib?okrz5HZ6Sps2ZZ3UKH9unE99mm2szR64?

Scale = 1:9.4

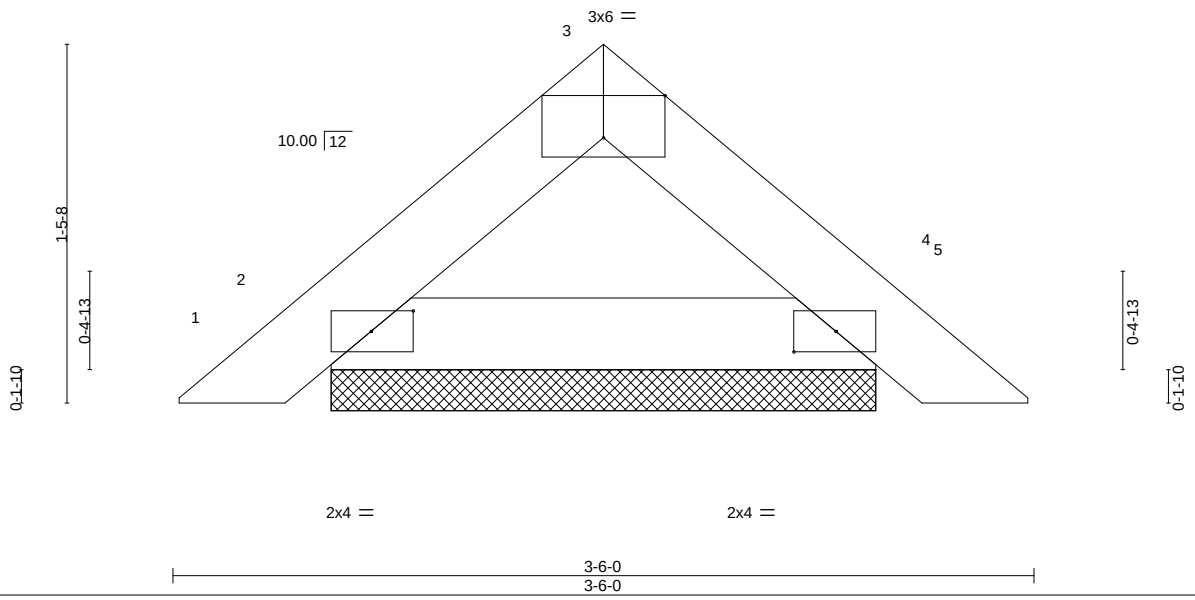

Plate Offsets (X,Y)-- [2:0-2-1,0-1-0], [3:0-3-0,Edge], [4:0-2-1,0-1-0]

LOADING (psf)		SPACING-	2-0-0	CSI.		DEFL.	in	(loc)	l/defl	L/d	PLATES	GRIP
TCLL	20.0	Plate Grip DOL	1.25	TC	0.03	Vert(LL)	0.00	4	n/r	120	MT20	244/190
TCDL	7.0	Lumber DOL	1.25	BC	0.05	Vert(CT)	0.00	4	n/r	120		
BCLL	0.0 *	Rep Stress Incr	YES	WB	0.00	Horz(CT)	0.00	4	n/a	n/a		
BCDL	10.0	Code FBC2020/TPI2014		Matrix-P							Weight: 10 lb	FT = 20%

LUMBER-
TOP CHORD 2x4 SP No.2
BOT CHORD 2x4 SP No.2

BRACING-
TOP CHORD Structural wood sheathing directly applied or 3-6-0 oc purlins.
BOT CHORD Rigid ceiling directly applied or 10-0-0 oc bracing.

REACTIONS. (size) 2=2-2-9, 4=2-2-9
Max Horz 2=-28(LC 10)
Max Uplift 2=-24(LC 12), 4=-24(LC 13)
Max Grav 2=104(LC 1), 4=104(LC 1)

FORCES. (lb) - Max. Comp./Max. Ten. - All forces 250 (lb) or less except when shown.

NOTES-
1) Unbalanced roof live loads have been considered for this design.
2) Wind: ASCE 7-16; Vult=130mph (3-second gust) Vasd=101mph; TCDL=4.2psf; BCDL=3.0psf; h=20ft; Cat. II; Exp B; Encl., GCpi=0.18; MWFRS (envelope) gable end zone and C-C Exterior(2E) zone;C-C for members and forces & MWFRS for reactions shown; Lumber DOL=1.60 plate grip DOL=1.60
3) Building Designer / Project engineer responsible for verifying applied roof live load shown covers rain loading requirements specific to the use of this truss component.
4) Gable requires continuous bottom chord bearing.
5) This truss has been designed for a 10.0 psf bottom chord live load nonconcurrent with any other live loads.
6) * This truss has been designed for a live load of 20.0psf on the bottom chord in all areas where a rectangle 3-6-0 tall by 2-0-0 wide will fit between the bottom chord and any other members.
7) Provide mechanical connection (by others) of truss to bearing plate capable of withstanding 100 lb uplift at joint(s) 2, 4.
8) See Standard Industry Piggyback Truss Connection Detail for Connection to base truss as applicable, or consult qualified building designer.

This item has been electronically signed and sealed by ORegan, Philip, PE using a Digital Signature. Printed copies of this document are not considered signed and sealed and the signature must be verified on any electronic copies.

Philip J. O'Regan PE No.58126
MiTek Inc. DBA MiTek USA FL Cert 6634
16023 Swingley Ridge Rd. Chesterfield, MO 63017
Date:

April 14,2023

WARNING - Verify design parameters and READ NOTES ON THIS AND INCLUDED MITEK REFERENCE PAGE MII-7473 rev. 5/19/2020 BEFORE USE.
Design valid for use only with MiTek® connectors. This design is based only upon parameters shown, and is for an individual building component, not a truss system. Before use, the building designer must verify the applicability of design parameters and properly incorporate this design into the overall building design. Bracing indicated is to prevent buckling of individual truss web and/or chord members only. Additional temporary and permanent bracing is always required for stability and to prevent collapse with possible personal injury and property damage. For general guidance regarding the fabrication, storage, delivery, erection and bracing of trusses and truss systems, see ***ANSI/TPI1 Quality Criteria, DSB-89 and BCSI Building Component Safety Information*** available from Truss Plate Institute, 2670 Crain Highway, Suite 203 Waldorf, MD 20601

MiTek
16023 Swingley Ridge Rd
Chesterfield, MO 63017

Job	Truss	Truss Type	Qty	Ply	CJ CONST. - CADY RES.
3371626	PB03	Piggyback	15	1	T30317745 Job Reference (optional)

Builders FirstSource (Lake City,FL), Lake City, FL - 32055, 8.530 s Mar 9 2023 MiTek Industries, Inc. Thu Apr 13 14:24:48 2023 Page 1
ID:Ys8zlwKNmTR0LjtaCjYR7AyUufK-IZ8qmZyy7c2S4HFfhXUHxTet9Iz7dodXcTFs5lzR63z

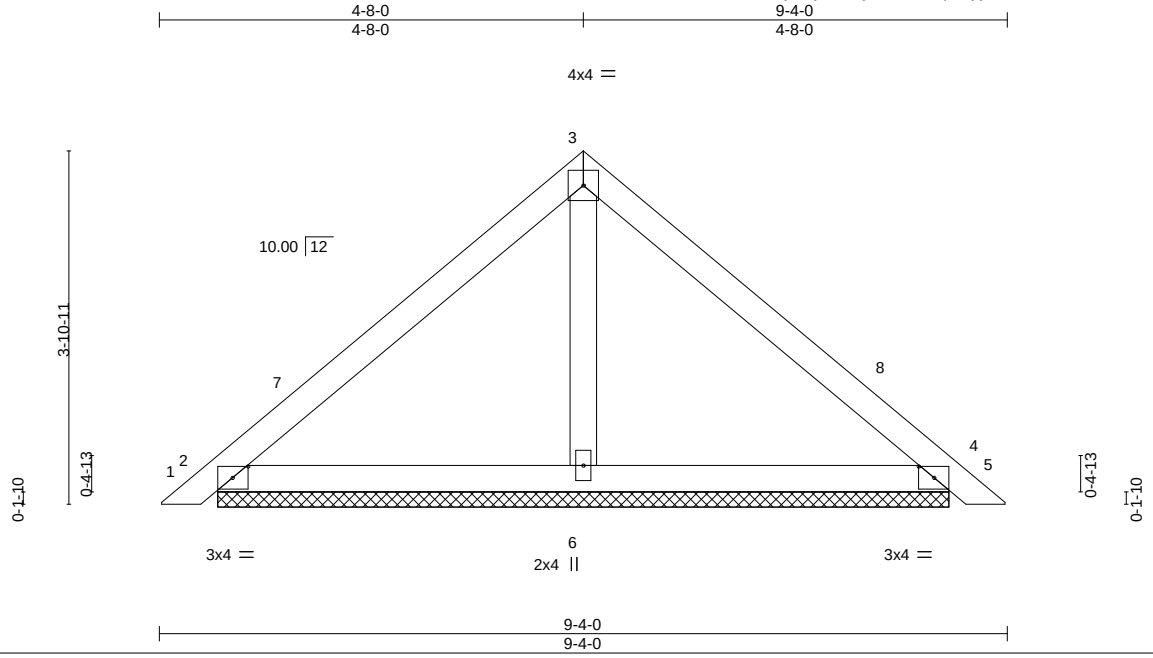

Plate Offsets (X,Y)-- [2:0-2-1,0-1-8], [4:0-2-1,0-1-8]

LOADING (psf)		SPACING-	2-0-0	CSI.		DEFL.	in	(loc)	l/defl	L/d	PLATES	GRIP
TCLL	20.0	Plate Grip DOL	1.25	TC	0.18	Vert(LL)	0.00	5	n/r	120	MT20	244/190
TCDL	7.0	Lumber DOL	1.25	BC	0.16	Vert(CT)	0.01	5	n/r	120		
BCLL	0.0 *	Rep Stress Incr	YES	WB	0.04	Horz(CT)	0.00	4	n/a	n/a		
BCDL	10.0	Code FBC2020/TPI2014		Matrix-S							Weight: 35 lb	FT = 20%

LUMBER-
TOP CHORD 2x4 SP No.2
BOT CHORD 2x4 SP No.2
OTHERS 2x4 SP No.3

BRACING-
TOP CHORD Structural wood sheathing directly applied or 6-0-0 oc purlins.
BOT CHORD Rigid ceiling directly applied or 10-0-0 oc bracing.

REACTIONS. (size) 2=8-0-9, 4=8-0-9, 6=8-0-9
Max Horz 2=81(LC 11)
Max Uplift 2=-45(LC 12), 4=-55(LC 13), 6=-37(LC 12)
Max Grav 2=179(LC 1), 4=179(LC 1), 6=282(LC 1)

FORCES. (lb) - Max. Comp./Max. Ten. - All forces 250 (lb) or less except when shown.

NOTES-
1) Unbalanced roof live loads have been considered for this design.
2) Wind: ASCE 7-16; Vult=130mph (3-second gust) Vasd=101mph; TCDL=4.2psf; BCDL=3.0psf; h=20ft; Cat. II; Exp B; Encl., GCpi=0.18; MWFRS (envelope) gable end zone and C-C Exterior(2E) 0-2-14 to 3-2-14, Interior(1) 3-2-14 to 4-8-0, Exterior(2R) 4-8-0 to 7-8-0, Interior(1) 7-8-0 to 9-1-2 zone;C-C for members and forces & MWFRS for reactions shown; Lumber DOL=1.60 plate grip DOL=1.60
3) Building Designer / Project engineer responsible for verifying applied roof live load shown covers rain loading requirements specific to the use of this truss component.
4) Gable requires continuous bottom chord bearing.
5) This truss has been designed for a 10.0 psf bottom chord live load nonconcurrent with any other live loads.
6) * This truss has been designed for a live load of 20.0psf on the bottom chord in all areas where a rectangle 3-6-0 tall by 2-0-0 wide will fit between the bottom chord and any other members.
7) Provide mechanical connection (by others) of truss to bearing plate capable of withstanding 100 lb uplift at joint(s) 2, 4, 6.
8) See Standard Industry Piggyback Truss Connection Detail for Connection to base truss as applicable, or consult qualified building designer.

This item has been electronically signed and sealed by ORegan, Philip, PE using a Digital Signature. Printed copies of this document are not considered signed and sealed and the signature must be verified on any electronic copies.

Philip J. O'Regan PE No.58126
MiTek Inc. DBA MiTek USA FL Cert 6634
16023 Swingley Ridge Rd. Chesterfield, MO 63017
Date:

April 14,2023

WARNING - Verify design parameters and READ NOTES ON THIS AND INCLUDED MITEK REFERENCE PAGE MII-7473 rev. 5/19/2020 BEFORE USE.
Design valid for use only with MiTek® connectors. This design is based only upon parameters shown, and is for an individual building component, not a truss system. Before use, the building designer must verify the applicability of design parameters and properly incorporate this design into the overall building design. Bracing indicated is to prevent buckling of individual truss web and/or chord members only. Additional temporary and permanent bracing is always required for stability and to prevent collapse with possible personal injury and property damage. For general guidance regarding the fabrication, storage, delivery, erection and bracing of trusses and truss systems, see ***ANSI/TPI1 Quality Criteria, DSB-89 and BCSI Building Component Safety Information*** available from Truss Plate Institute, 2670 Crain Highway, Suite 203 Waldorf, MD 20601

MiTek
16023 Swingley Ridge Rd
Chesterfield, MO 63017

Job	Truss	Truss Type	Qty	Ply	CJ CONST. - CADY RES.
3371626	PB03G	GABLE	2	1	T30317746 Job Reference (optional)

Builders FirstSource (Lake City,FL), Lake City, FL - 32055, 8.530 s Mar 9 2023 MiTek Industries, Inc. Thu Apr 13 14:24:49 2023 Page 1
ID:Ys8zlwKNmTR0LjtaCjYR7AyUufK-mmiC_vzauwAJiRpsEE0WUhB4zhLOMFnhr7?QeBzR63y

Scale = 1:22.9

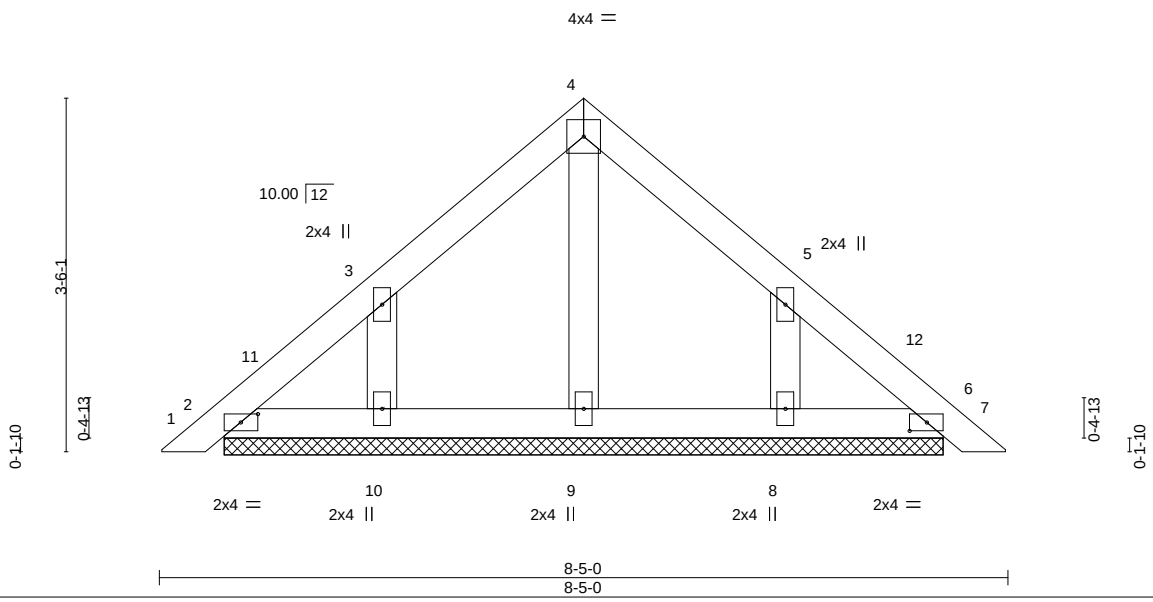

Plate Offsets (X,Y)-- [2:0-2-1,0-1-0], [6:0-2-1,0-1-0]

LOADING (psf)		SPACING-	2-0-0	CSI.		DEFL.	in	(loc)	l/defl	L/d	PLATES	GRIP
TCLL	20.0	Plate Grip DOL	1.25	TC	0.05	Vert(LL)	0.00	6	n/r	120	MT20	244/190
TCDL	7.0	Lumber DOL	1.25	BC	0.03	Vert(CT)	0.00	6	n/r	120		
BCLL	0.0 *	Rep Stress Incr	YES	WB	0.05	Horz(CT)	0.00	6	n/a	n/a		
BCDL	10.0	Code FBC2020/TPI2014		Matrix-S							Weight: 34 lb	FT = 20%

LUMBER-
TOP CHORD 2x4 SP No.2
BOT CHORD 2x4 SP No.2
OTHERS 2x4 SP No.3

BRACING-
TOP CHORD Structural wood sheathing directly applied or 6-0-0 oc purlins.
BOT CHORD Rigid ceiling directly applied or 10-0-0 oc bracing.

REACTIONS. All bearings 7-1-9.
(lb) - Max Horz 2=-73(LC 10)
Max Uplift All uplift 100 lb or less at joint(s) 2, 6, 10, 8
Max Grav All reactions 250 lb or less at joint(s) 2, 6, 9, 10, 8

FORCES. (lb) - Max. Comp./Max. Ten. - All forces 250 (lb) or less except when shown.

NOTES-
1) Unbalanced roof live loads have been considered for this design.
2) Wind: ASCE 7-16; Vult=130mph (3-second gust) Vasd=101mph; TCDL=4.2psf; BCDL=3.0psf; h=20ft; Cat. II; Exp B; Encl., GCpi=0.18; MWFRS (envelope) gable end zone and C-C Exterior(2E) 0-2-14 to 3-2-14, Interior(1) 3-2-14 to 4-2-8, Exterior(2R) 4-2-8 to 7-2-8, Interior(1) 7-2-8 to 8-2-2 zone;C-C for members and forces & MWFRS for reactions shown; Lumber DOL=1.60 plate grip DOL=1.60
3) Truss designed for wind loads in the plane of the truss only. For studs exposed to wind (normal to the face), see Standard Industry Gable End Details as applicable, or consult qualified building designer as per ANSI/TPI 1.
4) Building Designer / Project engineer responsible for verifying applied roof live load shown covers rain loading requirements specific to the use of this truss component.
5) Gable requires continuous bottom chord bearing.
6) Gable studs spaced at 2-0-0 oc.
7) This truss has been designed for a 10.0 psf bottom chord live load nonconcurrent with any other live loads.
8) * This truss has been designed for a live load of 20.0psf on the bottom chord in all areas where a rectangle 3-6-0 tall by 2-0-0 wide will fit between the bottom chord and any other members.
9) Provide mechanical connection (by others) of truss to bearing plate capable of withstanding 100 lb uplift at joint(s) 2, 6, 10, 8.
10) See Standard Industry Piggyback Truss Connection Detail for Connection to base truss as applicable, or consult qualified building designer.

This item has been electronically signed and sealed by ORegan, Philip, PE using a Digital Signature. Printed copies of this document are not considered signed and sealed and the signature must be verified on any electronic copies.

Philip J. O'Regan PE No.58126
MiTek Inc. DBA MiTek USA FL Cert 6634
16023 Swingley Ridge Rd. Chesterfield, MO 63017
Date:

April 14,2023

WARNING - Verify design parameters and READ NOTES ON THIS AND INCLUDED MITEK REFERENCE PAGE MII-7473 rev. 5/19/2020 BEFORE USE.
Design valid for use only with MiTek® connectors. This design is based only upon parameters shown, and is for an individual building component, not a truss system. Before use, the building designer must verify the applicability of design parameters and properly incorporate this design into the overall building design. Bracing indicated is to prevent buckling of individual truss web and/or chord members only. Additional temporary and permanent bracing is always required for stability and to prevent collapse with possible personal injury and property damage. For general guidance regarding the fabrication, storage, delivery, erection and bracing of trusses and truss systems, see ***ANSI/TPI1 Quality Criteria, DSB-89 and BCSI Building Component Safety Information*** available from Truss Plate Institute, 2670 Crain Highway, Suite 203 Waldorf, MD 20601

MiTek
16023 Swingley Ridge Rd
Chesterfield, MO 63017

Job	Truss	Truss Type	Qty	Ply	CJ CONST. - CADY RES.
3371626	T01	Attic	4	1	T30317747 Job Reference (optional)

Builders FirstSource (Lake City,FL), Lake City, FL - 32055, 8.530 s Mar 9 2023 MiTek Industries, Inc. Thu Apr 13 14:24:51 2023 Page 1
ID:Ys8zlwKNmTR0LjtaCjYR7AyUufK-i8qzPb?rQXQ1xlzEMf2_Z6GEhVo8q0MzJRUWi4zR63w

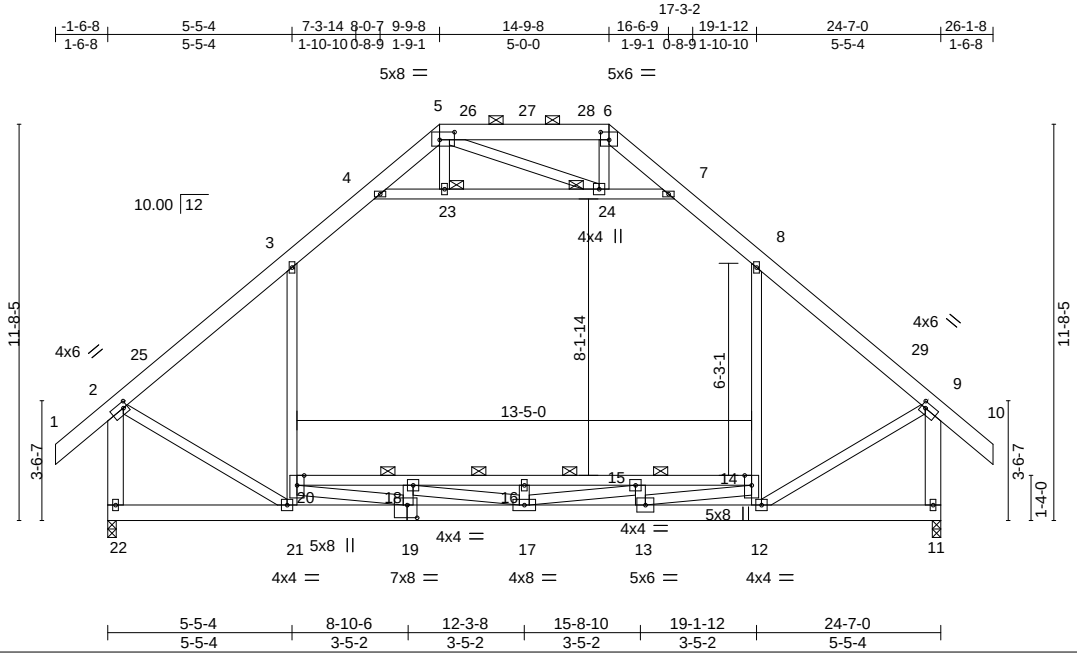

Plate Offsets (X,Y)-- [2:0-1-8,0-2-0], [5:0-5-4,0-2-12], [6:0-3-0,0-2-12], [9:0-1-8,0-2-0], [19:0-3-8,0-4-8]

LOADING (psf)		SPACING-	2-0-0	CSI.		DEFL.	in	(loc)	l/defl	L/d	PLATES	GRIP
TCLL	20.0	Plate Grip DOL	1.25	TC	0.80	Vert(LL)	-0.20	16	>999	240	MT20	244/190
TCDL	7.0	Lumber DOL	1.25	BC	0.97	Vert(CT)	-0.36	16	>801	180		
BCLL	0.0 *	Rep Stress Incr	YES	WB	0.62	Horz(CT)	0.03	11	n/a	n/a		
BCDL	10.0	Code FBC2020/TPI2014		Matrix-MS		Attic	-0.13	14-20	1217	360	Weight: 257 lb	FT = 20%

LUMBER-
TOP CHORD 2x6 SP No.2
BOT CHORD 2x6 SP No.2 *Except*
14-20: 2x4 SP No.1
WEBS 2x4 SP No.3 *Except*
2-22,9-11: 2x6 SP No.2, 19-20,17-18,15-17,13-14: 2x4 SP No.2

BRACING-
TOP CHORD Structural wood sheathing directly applied or 4-5-2 oc purlins, except end verticals, and 2-0-0 oc purlins (6-0-0 max.): 5-6.
BOT CHORD Rigid ceiling directly applied or 10-0-0 oc bracing. Except:
3-4-0 oc bracing: 14-20
JOINTS 1 Brace at Jt(s): 23, 24

REACTIONS. (size) 22=0-3-0, 11=0-3-0
Max Horz 22=-313(LC 10)
Max Grav 22=1655(LC 2), 11=1655(LC 2)

FORCES. (lb) - Max. Comp./Max. Ten. - All forces 250 (lb) or less except when shown.
TOP CHORD 2-3=-1373/0, 3-4=-962/101, 4-5=-288/153, 5-6=-145/280, 6-7=-279/156, 7-8=-962/101, 8-9=-1373/0, 2-22=-1637/21, 9-11=-1636/22
BOT CHORD 21-22=-289/350, 19-21=-91/1099, 17-19=0/2994, 13-17=0/2924, 12-13=0/942, 18-20=-2061/0, 16-18=-2903/0, 15-16=-2903/0, 14-15=-2083/0
WEBS 20-21=-346/54, 3-20=0/630, 12-14=-351/58, 8-14=0/628, 4-23=-1136/74, 23-24=-1131/75, 7-24=-1155/76, 2-21=0/1099, 9-12=0/1101, 16-17=-380/0, 18-19=-677/0, 19-20=0/2176, 17-18=-96/922, 13-15=-676/0, 15-17=-111/933, 13-14=0/2195

NOTES-
1) Unbalanced roof live loads have been considered for this design.
2) Wind: ASCE 7-16; Vult=130mph (3-second gust) Vasd=101mph; TCDL=4.2psf; BCDL=3.0psf; h=20ft; Cat. II; Exp B; Encl., GCpi=0.18; MWFRS (envelope) gable end zone and C-C Exterior(2E) -1-6-8 to 1-5-8, Interior(1) 1-5-8 to 9-9-8, Exterior(2R) 9-9-8 to 14-0-7, Interior(1) 14-0-7 to 14-9-8, Exterior(2R) 14-9-8 to 19-1-12, Interior(1) 19-1-12 to 26-1-8 zone; end vertical left and right exposed;C-C for members and forces & MWFRS for reactions shown; Lumber DOL=1.60 plate grip DOL=1.60
3) Building Designer / Project engineer responsible for verifying applied roof live load shown covers rain loading requirements specific to the use of this truss component.
4) Provide adequate drainage to prevent water ponding.
5) All plates are 2x4 MT20 unless otherwise indicated.
6) This truss has been designed for a 10.0 psf bottom chord live load nonconcurrent with any other live loads.
7) * This truss has been designed for a live load of 20.0psf on the bottom chord in all areas where a rectangle 3-6-0 tall by 2-0-0 wide will fit between the bottom chord and any other members.
8) Ceiling dead load (5.0 psf) on member(s). 3-4, 7-8, 4-23, 23-24, 7-24; Wall dead load (5.0psf) on member(s).3-20, 8-14
9) Bottom chord live load (40.0 psf) and additional bottom chord dead load (10.0 psf) applied only to room. 18-20, 16-18, 15-16, 14-15
10) Graphical purlin representation does not depict the size or the orientation of the purlin along the top and/or bottom chord.
11) Attic room checked for L/360 deflection.

This item has been electronically signed and sealed by ORegan, Philip, PE using a Digital Signature. Printed copies of this document are not considered signed and sealed and the signature must be verified on any electronic copies.

Philip J. O'Regan PE No.58126
MiTek Inc. DBA MiTek USA FL Cert 6634
16023 Swingley Ridge Rd. Chesterfield, MO 63017
Date:

April 14,2023

WARNING - Verify design parameters and READ NOTES ON THIS AND INCLUDED MITEK REFERENCE PAGE MII-7473 rev. 5/19/2020 BEFORE USE.
Design valid for use only with MiTek® connectors. This design is based only upon parameters shown, and is for an individual building component, not a truss system. Before use, the building designer must verify the applicability of design parameters and properly incorporate this design into the overall building design. Bracing indicated is to prevent buckling of individual truss web and/or chord members only. Additional temporary and permanent bracing is always required for stability and to prevent collapse with possible personal injury and property damage. For general guidance regarding the fabrication, storage, delivery, erection and bracing of trusses and truss systems, see ***ANSI/TPI1 Quality Criteria, DSB-89 and BCSI Building Component Safety Information*** available from Truss Plate Institute, 2670 Crain Highway, Suite 203 Waldorf, MD 20601

MiTek
16023 Swingley Ridge Rd
Chesterfield, MO 63017

Job	Truss	Truss Type	Qty	Ply	CJ CONST. - CADY RES.
3371626	T01G	GABLE	1	1	T30317748 Job Reference (optional)

Builders FirstSource (Lake City,FL), Lake City, FL - 32055, 8.530 s Mar 9 2023 MiTek Industries, Inc. Thu Apr 13 14:24:54 2023 Page 1
ID:Ys8zlwKNmTR0LjtaCjYR7AyUufK-7jV51d1jjSocoCip1nbhBkuuNir01HmQ?PjBJOzR63t

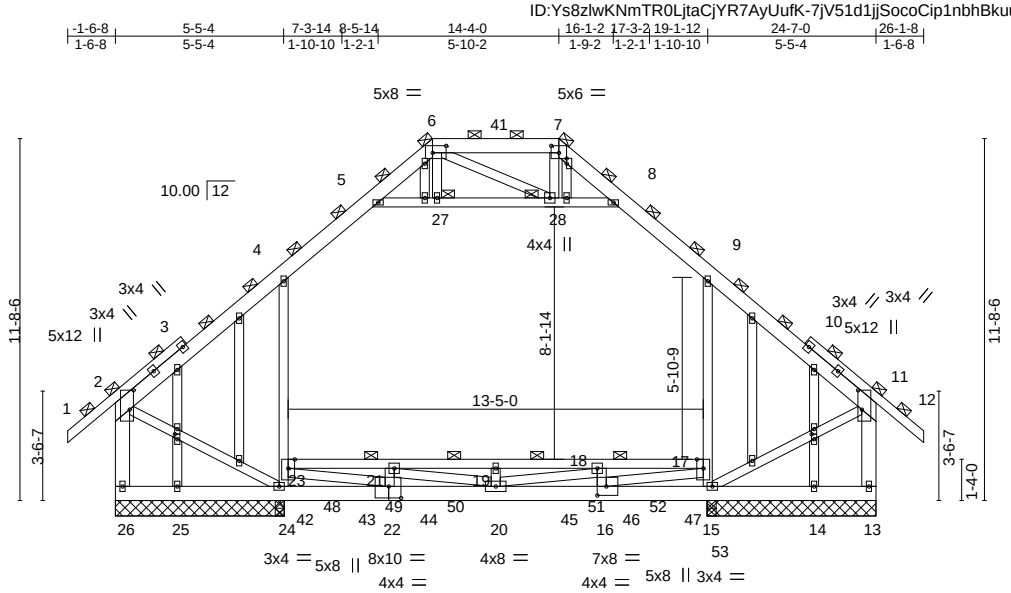

Plate Offsets (X,Y)-- [2:0-7-8,0-1-8], [6:0-5-4,0-2-12], [7:0-3-0,0-2-12], [11:0-7-8,0-1-8], [16:0-3-8,0-3-8], [22:0-4-12,0-4-8], [30:0-1-15,0-1-0], [34:0-2-0,0-0-0], [35:0-1-15,0-1-0]

LOADING (psf)		SPACING-	2-0-0	CSI.		DEFL.	in	(loc)	l/defl	L/d	PLATES	GRIP
TCLL	20.0	Plate Grip DOL	1.25	TC	0.20	Vert(LL)	-0.13	19	>999	240	MT20	244/190
TCDL	7.0	Lumber DOL	1.25	BC	0.89	Vert(CT)	-0.23	19	>723	180		
BCLL	0.0 *	Rep Stress Incr	NO	WB	0.96	Horz(CT)	0.02	13	n/a	n/a		
BCDL	10.0	Code FBC2020/TPI2014		Matrix-MS		Attic	-0.12	17-23	1308	360	Weight: 286 lb	FT = 20%

LUMBER-

TOP CHORD	2x6 SP No.2 *Except* 1-3,10-12: 2x4 SP No.2
BOT CHORD	2x6 SP No.2 *Except* 17-23: 2x4 SP No.1
WEBS	2x4 SP No.3 *Except* 2-26,11-13: 2x6 SP No.2
OTHERS	2x4 SP No.3

BRACING-

TOP CHORD	2-0-0 oc purlins (6-0-0 max.), except end verticals.
BOT CHORD	Rigid ceiling directly applied or 10-0-0 oc bracing. Except: 3-4-0 oc bracing: 17-23
JOINTS	1 Brace at Jt(s): 2, 6, 7, 11, 27, 28

REACTIONS. All bearings 5-5-8.
(lb) - Max Horz 26=-306(LC 6)
Max Uplift All uplift 100 lb or less at joint(s) 26, 13 except 24=-153(LC 8), 15=-153(LC 9), 14=-205(LC 14), 25=-206(LC 14)
Max Grav All reactions 250 lb or less at joint(s) 14, 25 except 26=753(LC 1), 24=1402(LC 34), 24=829(LC 1), 15=1395(LC 35), 15=829(LC 1), 13=753(LC 1)

FORCES. (lb) - Max. Comp./Max. Ten. - All forces 250 (lb) or less except when shown.

TOP CHORD	2-4=-505/102, 4-5=-537/114, 5-6=-376/75, 6-7=-283/91, 7-8=-373/74, 8-9=-537/114, 9-11=-505/95, 2-26=-678/80, 11-13=-678/74
BOT CHORD	25-26=-282/275, 24-25=-282/275, 22-24=-106/435, 20-22=0/2134, 16-20=0/2128, 15-16=-64/405, 21-23=-1978/0, 19-21=-2859/0, 18-19=-2859/0, 17-18=-1997/0
WEBS	23-24=-1055/95, 4-23=-419/225, 15-17=-1055/96, 9-17=-415/225, 2-24=-94/369, 11-15=-92/369, 19-20=-369/0, 21-22=-697/0, 22-23=0/1998, 20-21=0/892, 16-18=-697/0, 18-20=0/895, 16-17=0/2017

NOTES-
1) Unbalanced roof live loads have been considered for this design.
2) Wind: ASCE 7-16; Vult=130mph (3-second gust) Vasd=101mph; TCDL=4.2psf; BCDL=3.0psf; h=20ft; Cat. II; Exp B; Encl., GCpi=0.18; MWFRS (envelope) gable end zone; end vertical left and right exposed; Lumber DOL=1.60 plate grip DOL=1.60
3) Truss designed for wind loads in the plane of the truss only. For studs exposed to wind (normal to the face), see Standard Industry Gable End Details as applicable, or consult qualified building designer as per ANSI/TPI 1.
4) Building Designer / Project engineer responsible for verifying applied roof live load shown covers rain loading requirements specific to the use of this truss component.
5) Provide adequate drainage to prevent water ponding.
6) All plates are 2x4 MT20 unless otherwise indicated.
7) Gable studs spaced at 2-0-0 oc.
8) This truss has been designed for a 10.0 psf bottom chord live load nonconcurrent with any other live loads.
9) * This truss has been designed for a live load of 20.0psf on the bottom chord in all areas where a rectangle 3-6-0 tall by 2-0-0 wide will fit between the bottom chord and any other members.
10) Ceiling dead load (5.0 psf) on member(s). 4-5, 8-9, 5-27, 27-28, 8-28; Wall dead load (5.0psf) on member(s).4-23, 9-17
11) Bottom chord live load (40.0 psf) and additional bottom chord dead load (10.0 psf) applied only to room. 21-23, 19-21, 18-19, 17-18

This item has been electronically signed and sealed by ORegan, Philip, PE using a Digital Signature. Printed copies of this document are not considered signed and sealed and the signature must be verified on any electronic copies.

Philip J. O'Regan PE No.58126
MiTek Inc. DBA MiTek USA FL Cert 6634
16023 Swingley Ridge Rd. Chesterfield, MO 63017
Date:

April 14,2023

Continued on page 2

WARNING - Verify design parameters and READ NOTES ON THIS AND INCLUDED MITEK REFERENCE PAGE MII-7473 rev. 5/19/2020 BEFORE USE.
Design valid for use only with MiTek® connectors. This design is based only upon parameters shown, and is for an individual building component, not a truss system. Before use, the building designer must verify the applicability of design parameters and properly incorporate this design into the overall building design. Bracing indicated is to prevent buckling of individual truss web and/or chord members only. Additional temporary and permanent bracing is always required for stability and to prevent collapse with possible personal injury and property damage. For general guidance regarding the fabrication, storage, delivery, erection and bracing of trusses and truss systems, see ***ANSI/TPI1 Quality Criteria, DSB-89 and BCSI Building Component Safety Information*** available from Truss Plate Institute, 2670 Crain Highway, Suite 203 Waldorf, MD 20601

MiTek
16023 Swingley Ridge Rd
Chesterfield, MO 63017

NOTES-

12) Provide mechanical connection (by others) of truss to bearing plate capable of withstanding 100 lb uplift at joint(s) 26, 13 except (jt=lb) 24=153, 15=153, 14=205, 25=206.
13) Graphical purlin representation does not depict the size or the orientation of the purlin along the top and/or bottom chord.
14) Hanger(s) or other connection device(s) shall be provided sufficient to support concentrated load(s) 26 lb down and 23 lb up at 6-0-4, 26 lb down and 23 lb up at 8-0-4, 26 lb down and 23 lb up at 10-0-4, 26 lb down and 23 lb up at 12-0-4, 26 lb down and 23 lb up at 12-6-12, 26 lb down and 23 lb up at 14-6-12, and 26 lb down and 23 lb up at 16-6-12, and 26 lb down and 23 lb up at 18-6-12 on bottom chord. The design/selection of such connection device(s) is the responsibility of others.
15) Attic room checked for L/360 deflection.
16) In the LOAD CASE(S) section, loads applied to the face of the truss are noted as front (F) or back (B).

LOAD CASE(S) Standard

1) Dead + Roof Live (balanced): Lumber Increase=1.25, Plate Increase=1.25
   Uniform Loads (plf)
   Vert: 1-2=-54, 2-4=-54, 4-5=-64, 5-6=-54, 6-7=-54, 7-8=-54, 8-9=-64, 9-11=-54, 11-12=-54, 13-26=-20, 17-23=-40, 5-8=-10
   Drag: 4-23=-10, 9-17=-10
   Concentrated Loads (lb)
   Vert: 20=-47(B) 42=-24(B) 43=-24(B) 44=-24(B) 45=-24(B) 46=-24(B) 47=-24(B)

WARNING - Verify design parameters and READ NOTES ON THIS AND INCLUDED MITEK REFERENCE PAGE MII-7473 rev. 5/19/2020 BEFORE USE.
Design valid for use only with MiTek® connectors. This design is based only upon parameters shown, and is for an individual building component, not a truss system. Before use, the building designer must verify the applicability of design parameters and properly incorporate this design into the overall building design. Bracing indicated is to prevent buckling of individual truss web and/or chord members only. Additional temporary and permanent bracing is always required for stability and to prevent collapse with possible personal injury and property damage. For general guidance regarding the fabrication, storage, delivery, erection and bracing of trusses and truss systems, see ***ANSI/TPI1 Quality Criteria, DSB-89 and BCSI Building Component Safety Information*** available from Truss Plate Institute, 2670 Crain Highway, Suite 203 Waldorf, MD 20601

MiTek
16023 Swingley Ridge Rd
Chesterfield, MO 63017

Job	Truss	Truss Type	Qty	Ply	CJ CONST. - CADY RES.
3371626	T02	ATTIC	4	1	T30317749
					Job Reference (optional)

Builders FirstSource (Lake City,FL), Lake City, FL - 32055, 8.530 s Mar 9 2023 MiTek Industries, Inc. Thu Apr 13 14:24:56 2023 Page 1
ID:Ys8zlwKNmTR0LjtaCjYR7AyUufK-36dsSI2zE42J2WsC9Ce9G9z5EWVOVHciSjCHNHzR63r

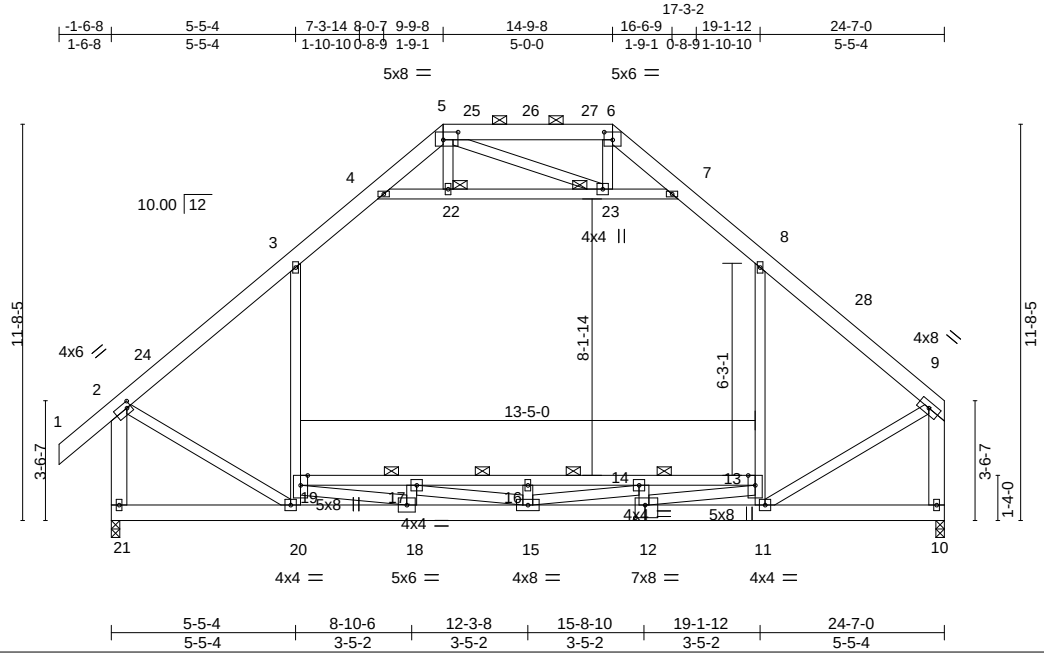

Plate Offsets (X,Y)-- [2:0-1-8,0-2-0], [5:0-5-4,0-2-12], [6:0-3-0,0-2-12], [12:0-3-8,0-4-8]

LOADING (psf)		SPACING- 2-0-0		CSI.		DEFL.	in	(loc)	l/defl	L/d	PLATES	GRIP
TCLL	20.0	Plate Grip DOL	1.25	TC	0.81	Vert(LL)	-0.20	16	>999	240	MT20	244/190
TCDL	7.0	Lumber DOL	1.25	BC	0.96	Vert(CT)	-0.36	16	>797	180		
BCLL	0.0 *	Rep Stress Incr	YES	WB	0.62	Horz(CT)	0.03	10	n/a	n/a		
BCDL	10.0	Code FBC2020/TPI2014		Matrix-MS		Attic	-0.13	13-19	1217	360	Weight: 252 lb	FT = 20%

LUMBER-
TOP CHORD 2x6 SP No.2
BOT CHORD 2x6 SP No.2 *Except*
13-19: 2x4 SP No.1
WEBS 2x4 SP No.3 *Except*
2-21,9-10: 2x6 SP No.2, 18-19,15-17,14-15,12-13: 2x4 SP No.2

BRACING-
TOP CHORD Structural wood sheathing directly applied or 4-4-9 oc purlins, except end verticals, and 2-0-0 oc purlins (6-0-0 max.): 5-6.
BOT CHORD Rigid ceiling directly applied or 10-0-0 oc bracing. Except: 3-4-0 oc bracing: 13-19
JOINTS 1 Brace at Jt(s): 22, 23

REACTIONS. (size) 21=0-3-0, 10=0-3-0
Max Horz 21=302(LC 9)
Max Grav 21=1658(LC 2), 10=1574(LC 2)

FORCES. (lb) - Max. Comp./Max. Ten. - All forces 250 (lb) or less except when shown.
TOP CHORD 2-3=-1378/0, 3-4=-965/98, 4-5=-286/154, 5-6=-137/285, 6-7=-273/158, 7-8=-966/100, 8-9=-1373/0, 2-21=-1643/18, 9-10=-1564/0
BOT CHORD 20-21=-296/327, 18-20=-104/1082, 15-18=0/2970, 12-15=0/2936, 11-12=0/955, 17-19=-2077/0, 16-17=-2905/0, 14-16=-2905/0, 13-14=-2072/0
WEBS 19-20=-339/55, 3-19=0/632, 11-13=-378/70, 8-13=0/615, 4-22=-1148/67, 22-23=-1142/69, 7-23=-1168/74, 2-20=0/1104, 9-11=0/1102, 15-16=-380/0, 17-18=-678/0, 18-19=0/2192, 15-17=-93/938, 12-14=-674/0, 14-15=-116/915, 12-13=0/2180

NOTES-
1) Unbalanced roof live loads have been considered for this design.
2) Wind: ASCE 7-16; Vult=130mph (3-second gust) Vasd=101mph; TCDL=4.2psf; BCDL=3.0psf; h=20ft; Cat. II; Exp B; Encl., GCpi=0.18; MWFRS (envelope) gable end zone and C-C Exterior(2E) -1-6-8 to 1-5-8, Interior(1) 1-5-8 to 9-9-8, Exterior(2R) 9-9-8 to 14-0-7, Interior(1) 14-0-7 to 14-9-8, Exterior(2R) 14-9-8 to 19-1-12, Interior(1) 19-1-12 to 24-4-4 zone; end vertical left and right exposed;C-C for members and forces & MWFRS for reactions shown; Lumber DOL=1.60 plate grip DOL=1.60
3) Building Designer / Project engineer responsible for verifying applied roof live load shown covers rain loading requirements specific to the use of this truss component.
4) Provide adequate drainage to prevent water ponding.
5) All plates are 2x4 MT20 unless otherwise indicated.
6) This truss has been designed for a 10.0 psf bottom chord live load nonconcurrent with any other live loads.
7) * This truss has been designed for a live load of 20.0psf on the bottom chord in all areas where a rectangle 3-6-0 tall by 2-0-0 wide will fit between the bottom chord and any other members.
8) Ceiling dead load (5.0 psf) on member(s). 3-4, 7-8, 4-22, 22-23, 7-23; Wall dead load (5.0psf) on member(s).3-19, 8-13
9) Bottom chord live load (40.0 psf) and additional bottom chord dead load (10.0 psf) applied only to room. 17-19, 16-17, 14-16, 13-14
10) Graphical purlin representation does not depict the size or the orientation of the purlin along the top and/or bottom chord.
11) Attic room checked for L/360 deflection.

This item has been electronically signed and sealed by ORegan, Philip, PE using a Digital Signature. Printed copies of this document are not considered signed and sealed and the signature must be verified on any electronic copies.

Philip J. O'Regan PE No.58126
MiTek Inc. DBA MiTek USA FL Cert 6634
16023 Swingley Ridge Rd. Chesterfield, MO 63017
Date:

April 14,2023

WARNING - Verify design parameters and READ NOTES ON THIS AND INCLUDED MITEK REFERENCE PAGE MII-7473 rev. 5/19/2020 BEFORE USE.
Design valid for use only with MiTek® connectors. This design is based only upon parameters shown, and is for an individual building component, not a truss system. Before use, the building designer must verify the applicability of design parameters and properly incorporate this design into the overall building design. Bracing indicated is to prevent buckling of individual truss web and/or chord members only. Additional temporary and permanent bracing is always required for stability and to prevent collapse with possible personal injury and property damage. For general guidance regarding the fabrication, storage, delivery, erection and bracing of trusses and truss systems, see ***ANSI/TPI1 Quality Criteria, DSB-89 and BCSI Building Component Safety Information*** available from Truss Plate Institute, 2670 Crain Highway, Suite 203 Waldorf, MD 20601

MiTek
16023 Swingley Ridge Rd
Chesterfield, MO 63017

Job	Truss	Truss Type	Qty	Ply	CJ CONST. - CADY RES.
3371626	T03	ATTIC	1	2	T30317750 Job Reference (optional)

Builders FirstSource (Lake City,FL), Lake City, FL - 32055, 8.530 s Mar 9 2023 MiTek Industries, Inc. Thu Apr 13 14:24:59 2023 Page 1
ID:Ys8zlwKNmTR0LjtaCjYR7AyUufK-ThJ_4K5sX?RuvzanqKBsuobgOjXyic298hQy_czR63o

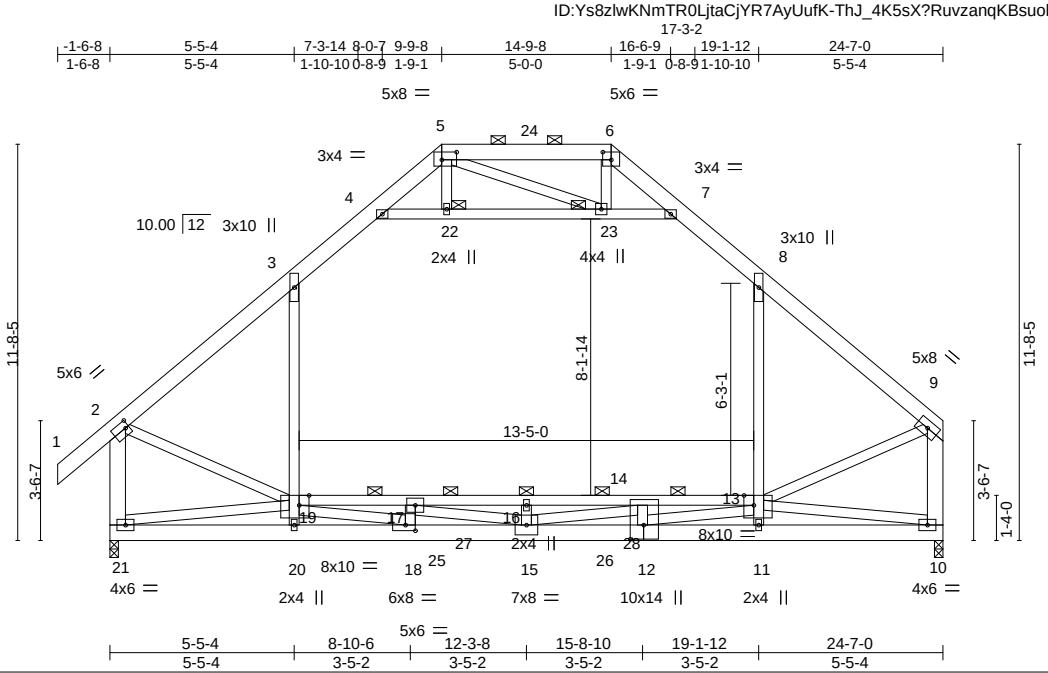

Plate Offsets (X,Y)-- [2:0-1-4,0-2-8], [5:0-5-4,0-2-12], [6:0-3-0,0-2-12], [12:0-5-0,0-4-12], [13:0-3-8,Edge], [18:0-3-8,0-2-0], [19:0-3-8,Edge]

LOADING (psf)		SPACING- 2-0-0		CSI.		DEFL.	in	(loc)	l/defl	L/d	PLATES	GRIP
TCLL	20.0	Plate Grip DOL	1.25	TC	0.56	Vert(LL)	-0.33	16-17	>891	240	MT20	244/190
TCDL	7.0	Lumber DOL	1.25	BC	0.97	Vert(CT)	-0.50	16-17	>579	180		
BCLL	0.0 *	Rep Stress Incr	NO	WB	0.77	Horz(CT)	0.01	10	n/a	n/a		
BCDL	10.0	Code FBC2020/TPI2014		Matrix-MS		Attic	-0.23	13-19	701	360	Weight: 532 lb	FT = 20%

LUMBER-

TOP CHORD 2x6 SP M 26 *Except*
5-6: 2x6 SP No.2
BOT CHORD 2x6 SP M 26 *Except*
13-19: 2x4 SP No.2, 10-12: 2x6 SP No.2
WEBS 2x4 SP No.3 *Except*
2-21,9-10: 2x6 SP No.2, 18-19,15-17,14-15,12-13: 2x4 SP No.1

BRACING-

TOP CHORD Structural wood sheathing directly applied or 6-0-0 oc purlins, except end verticals, and 2-0-0 oc purlins (10-0-0 max.): 5-6.
BOT CHORD Rigid ceiling directly applied or 6-0-0 oc bracing. Except:
2-8-0 oc bracing: 13-19
JOINTS 1 Brace at Jt(s): 22, 23

REACTIONS. (size) 21=0-3-0, 10=0-3-0
Max Horz 21=302(LC 27)
Max Uplift 21=-528(LC 8), 10=-472(LC 9)
Max Grav 21=3845(LC 34), 10=3656(LC 34)

FORCES. (lb) - Max. Comp./Max. Ten. - All forces 250 (lb) or less except when shown.
TOP CHORD 2-3=-4030/612, 3-4=-2399/423, 4-5=-113/792, 5-6=-191/1324, 6-7=-125/875, 7-8=-2438/426, 8-9=-4097/601, 2-21=-4146/600, 9-10=-4114/584
BOT CHORD 20-21=-1717/880, 18-20=-1862/908, 15-18=-1406/7672, 12-15=-1095/6721, 11-12=-2193/817, 10-11=-2044/788, 17-19=-4716/983, 16-17=-8653/1397, 14-16=-8653/1397, 13-14=-3924/851
WEBS 19-20=-67/550, 3-19=-449/2501, 11-13=-41/458, 8-13=-440/2435, 4-22=-4065/716, 22-23=-4054/717, 7-23=-4215/734, 2-19=-403/2871, 9-13=-426/3003, 15-16=-1429/105, 17-18=-1922/215, 18-19=-1620/9267, 15-17=-852/4370, 12-14=-2000/250, 14-15=-1049/5152, 12-13=-1584/9148, 19-21=-643/1736, 10-13=-818/2199

NOTES-

1) 2-ply truss to be connected together with 10d (0.131"x3") nails as follows:
Top chords connected as follows: 2x6 - 2 rows staggered at 0-9-0 oc.
Bottom chords connected as follows: 2x6 - 2 rows staggered at 0-9-0 oc, 2x4 - 1 row at 0-9-0 oc.
Webs connected as follows: 2x4 - 1 row at 0-9-0 oc.
2) All loads are considered equally applied to all plies, except if noted as front (F) or back (B) face in the LOAD CASE(S) section. Ply to ply connections have been provided to distribute only loads noted as (F) or (B), unless otherwise indicated.
3) Unbalanced roof live loads have been considered for this design.
4) Wind: ASCE 7-16; Vult=130mph (3-second gust) Vasd=101mph; TCDL=4.2psf; BCDL=3.0psf; h=20ft; Cat. II; Exp B; Encl., GCpi=0.18; MWFRS (envelope) gable end zone; end vertical left and right exposed; Lumber DOL=1.60 plate grip DOL=1.60
5) Building Designer / Project engineer responsible for verifying applied roof live load shown covers rain loading requirements specific to the use of this truss component.
6) Provide adequate drainage to prevent water ponding.
7) This truss has been designed for a 10.0 psf bottom chord live load nonconcurrent with any other live loads.
8) * This truss has been designed for a live load of 20.0psf on the bottom chord in all areas where a rectangle 3-6-0 tall by 2-0-0 wide will fit between the bottom chord and any other members.
9) Ceiling dead load (5.0 psf) on member(s). 3-4, 7-8, 4-22, 22-23, 7-23; Wall dead load (5.0psf) on member(s).3-19, 8-13
10) Bottom chord live load (40.0 psf) and additional bottom chord dead load (10.0 psf) applied only to room. 17-19, 16-17, 14-16, 13-14

Continued on page 2

This item has been electronically signed and sealed by ORegan, Philip, PE using a Digital Signature. Printed copies of this document are not considered signed and sealed and the signature must be verified on any electronic copies.

Philip J. O'Regan PE No.58126
MiTek Inc. DBA MiTek USA FL Cert 6634
16023 Swingley Ridge Rd. Chesterfield, MO 63017
Date:

April 14,2023

WARNING - Verify design parameters and READ NOTES ON THIS AND INCLUDED MITEK REFERENCE PAGE MII-7473 rev. 5/19/2020 BEFORE USE.
Design valid for use only with MiTek® connectors. This design is based only upon parameters shown, and is for an individual building component, not a truss system. Before use, the building designer must verify the applicability of design parameters and properly incorporate this design into the overall building design. Bracing indicated is to prevent buckling of individual truss web and/or chord members only. Additional temporary and permanent bracing is always required for stability and to prevent collapse with possible personal injury and property damage. For general guidance regarding the fabrication, storage, delivery, erection and bracing of trusses and truss systems, see ***ANSI/TPI1 Quality Criteria, DSB-89 and BCSI Building Component Safety Information*** available from Truss Plate Institute, 2670 Crain Highway, Suite 203 Waldorf, MD 20601

MiTek
16023 Swingley Ridge Rd
Chesterfield, MO 63017

NOTES-

11) Provide mechanical connection (by others) of truss to bearing plate capable of withstanding 100 lb uplift at joint(s) except (jt=lb) 21=528, 10=472.
12) Graphical purlin representation does not depict the size or the orientation of the purlin along the top and/or bottom chord.
13) Hanger(s) or other connection device(s) shall be provided sufficient to support concentrated load(s) 547 lb down and 324 lb up at 9-6-12, and 559 lb down and 319 lb up at 14-6-4 on bottom chord. The design/selection of such connection device(s) is the responsibility of others.
14) Attic room checked for L/360 deflection.

LOAD CASE(S) Standard

1) Dead + Roof Live (balanced): Lumber Increase=1.25, Plate Increase=1.25
   Uniform Loads (plf)
   Vert: 1-2=-54, 2-3=-54, 3-4=-64, 4-5=-54, 5-6=-54, 6-7=-54, 7-8=-64, 8-9=-54, 21-25=-20, 25-26=-195, 10-26=-20, 19-27=-40, 27-28=-215, 13-28=-40, 4-7=-10
   Drag: 3-19=-10, 8-13=-10
   Concentrated Loads (lb)
   Vert: 25=-472(F) 26=-533(F)

WARNING - Verify design parameters and READ NOTES ON THIS AND INCLUDED MITEK REFERENCE PAGE MII-7473 rev. 5/19/2020 BEFORE USE.
Design valid for use only with MiTek® connectors. This design is based only upon parameters shown, and is for an individual building component, not a truss system. Before use, the building designer must verify the applicability of design parameters and properly incorporate this design into the overall building design. Bracing indicated is to prevent buckling of individual truss web and/or chord members only. Additional temporary and permanent bracing is always required for stability and to prevent collapse with possible personal injury and property damage. For general guidance regarding the fabrication, storage, delivery, erection and bracing of trusses and truss systems, see ***ANSI/TPI1 Quality Criteria, DSB-89 and BCSI Building Component Safety Information*** available from Truss Plate Institute, 2670 Crain Highway, Suite 203 Waldorf, MD 20601

MiTek
16023 Swingley Ridge Rd
Chesterfield, MO 63017

Job	Truss	Truss Type	Qty	Ply	CJ CONST. - CADY RES.
3371626	T04	Jack-Partial	5	1	T30317751 Job Reference (optional)

Builders FirstSource (Lake City,FL), Lake City, FL - 32055, 8.530 s Mar 9 2023 MiTek Industries, Inc. Thu Apr 13 14:25:00 2023 Page 1
ID:Ys8zlwKNmTR0LjtaCjYR7AyUufK-yttNIg6UIIZlX79zO2i5Q?8wJ7_kR7?INLAVX2zR63n

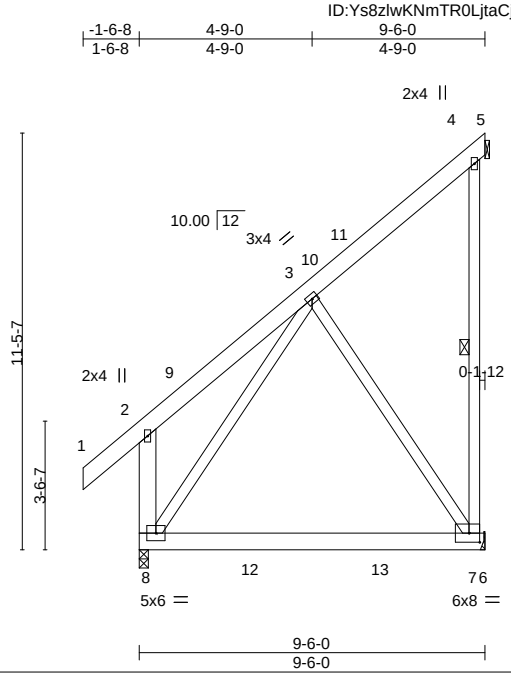

Plate Offsets (X,Y)-- [7:0-3-8,0-3-0]

LOADING (psf)		SPACING- 2-0-0		CSI.		DEFL. in (loc) l/defl L/d		PLATES	GRIP
TCLL	20.0	Plate Grip DOL	1.25	TC	0.23	Vert(LL) -0.12 7-8 >895 240		MT20	244/190
TCDL	7.0	Lumber DOL	1.25	BC	0.49	Vert(CT) -0.20 7-8 >551 180			
BCLL	0.0 *	Rep Stress Incr	YES	WB	0.46	Horz(CT) -0.01 5 n/a n/a			
BCDL	10.0	Code FBC2020/TPI2014		Matrix-MS				Weight: 102 lb	FT = 20%

LUMBER-
TOP CHORD 2x6 SP No.2
BOT CHORD 2x6 SP No.2
WEBS 2x4 SP No.3 *Except*
2-8: 2x6 SP No.2

BRACING-
TOP CHORD Structural wood sheathing directly applied or 6-0-0 oc purlins, except end verticals.
BOT CHORD Rigid ceiling directly applied or 10-0-0 oc bracing.
WEBS 1 Row at midpt 4-7

REACTIONS. (size) 5=Mechanical, 8=0-3-0, 7=Mechanical
Max Horz 8=240(LC 12)
Max Uplift 5=-7(LC 12), 7=-234(LC 12)
Max Grav 5=2(LC 10), 8=467(LC 2), 7=506(LC 19)

FORCES. (lb) - Max. Comp./Max. Ten. - All forces 250 (lb) or less except when shown.
TOP CHORD 2-8=-306/219
WEBS 3-8=-375/161, 3-7=-251/359

NOTES-
1) Wind: ASCE 7-16; Vult=130mph (3-second gust) Vasd=101mph; TCDL=4.2psf; BCDL=3.0psf; h=20ft; Cat. II; Exp B; Encl., GCpi=0.18; MWFRS (envelope) gable end zone and C-C Exterior(2E) -1-6-8 to 1-5-8, Interior(1) 1-5-8 to 9-5-4 zone; end vertical left exposed;C-C for members and forces & MWFRS for reactions shown; Lumber DOL=1.60 plate grip DOL=1.60
2) Building Designer / Project engineer responsible for verifying applied roof live load shown covers rain loading requirements specific to the use of this truss component.
3) N/A
4) This truss has been designed for a 10.0 psf bottom chord live load nonconcurrent with any other live loads.
5) * This truss has been designed for a live load of 20.0psf on the bottom chord in all areas where a rectangle 3-6-0 tall by 2-0-0 wide will fit between the bottom chord and any other members, with BCDL = 10.0psf.
6) Refer to girder(s) for truss to truss connections.
7) Refer to girder(s) for truss to truss connections.
8) Provide mechanical connection (by others) of truss to bearing plate capable of withstanding 100 lb uplift at joint(s) 5 except (jt=lb) 7=234.

This item has been electronically signed and sealed by ORegan, Philip, PE using a Digital Signature. Printed copies of this document are not considered signed and sealed and the signature must be verified on any electronic copies.

Philip J. O'Regan PE No.58126
MiTek Inc. DBA MiTek USA FL Cert 6634
16023 Swingley Ridge Rd. Chesterfield, MO 63017
Date:

April 14,2023

WARNING - Verify design parameters and READ NOTES ON THIS AND INCLUDED MITEK REFERENCE PAGE MII-7473 rev. 5/19/2020 BEFORE USE.
Design valid for use only with MiTek® connectors. This design is based only upon parameters shown, and is for an individual building component, not a truss system. Before use, the building designer must verify the applicability of design parameters and properly incorporate this design into the overall building design. Bracing indicated is to prevent buckling of individual truss web and/or chord members only. Additional temporary and permanent bracing is always required for stability and to prevent collapse with possible personal injury and property damage. For general guidance regarding the fabrication, storage, delivery, erection and bracing of trusses and truss systems, see ***ANSI/TPI1 Quality Criteria, DSB-89 and BCSI Building Component Safety Information*** available from Truss Plate Institute, 2670 Crain Highway, Suite 203 Waldorf, MD 20601

MiTek
16023 Swingley Ridge Rd
Chesterfield, MO 63017

Job	Truss	Truss Type	Qty	Ply	CJ CONST. - CADY RES.
3371626	T05	Jack-Closed	2	1	T30317752 Job Reference (optional)

Builders FirstSource (Lake City,FL), Lake City, FL - 32055, 8.530 s Mar 9 2023 MiTek Industries, Inc. Thu Apr 13 14:25:01 2023 Page 1
ID:Ys8zlwKNmTR0LjtaCjYR7AyUufK-Q3QlV0663chc8Hk9xlDKzDg3aXJvAdhSc?v23UzR63m

Scale = 1:65.6

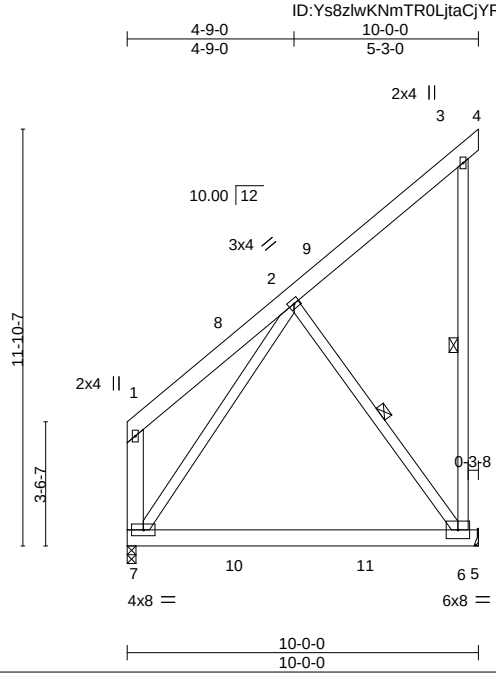

LOADING (psf)		SPACING-	2-0-0	CSI.		DEFL.	in	(loc)	l/defl	L/d	PLATES	GRIP
TCLL	20.0	Plate Grip DOL	1.25	TC	0.33	Vert(LL)	-0.15	6-7	>758	240	MT20	244/190
TCDL	7.0	Lumber DOL	1.25	BC	0.56	Vert(CT)	-0.26	6-7	>453	180		
BCLL	0.0 *	Rep Stress Incr	YES	WB	0.31	Horz(CT)	-0.00	5	n/a	n/a		
BCDL	10.0	Code FBC2020/TPI2014		Matrix-MS							Weight: 100 lb	FT = 20%

LUMBER-

TOP CHORD	2x6 SP No.2
BOT CHORD	2x6 SP No.2
WEBS	2x4 SP No.3 *Except* 1-7: 2x6 SP No.2

BRACING-

TOP CHORD	Structural wood sheathing directly applied or 6-0-0 oc purlins, except end verticals.
BOT CHORD	Rigid ceiling directly applied or 10-0-0 oc bracing.
WEBS	1 Row at midpt 3-6, 2-6

REACTIONS. (size) 5=Mechanical, 7=0-3-0
Max Horz 7=241(LC 12)
Max Uplift 5=-233(LC 12)
Max Grav 5=512(LC 19), 7=423(LC 20)

FORCES. (lb) - Max. Comp./Max. Ten. - All forces 250 (lb) or less except when shown.
WEBS 2-6=-254/326

NOTES-

1) Wind: ASCE 7-16; Vult=130mph (3-second gust) Vasd=101mph; TCDL=4.2psf; BCDL=3.0psf; h=20ft; Cat. II; Exp B; Encl., GCpi=0.18; MWFRS (envelope) gable end zone and C-C Exterior(2E) 0-2-12 to 3-2-12, Interior(1) 3-2-12 to 10-0-0 zone;C-C for members and forces & MWFRS for reactions shown; Lumber DOL=1.60 plate grip DOL=1.60
2) Building Designer / Project engineer responsible for verifying applied roof live load shown covers rain loading requirements specific to the use of this truss component.
3) This truss has been designed for a 10.0 psf bottom chord live load nonconcurrent with any other live loads.
4) * This truss has been designed for a live load of 20.0psf on the bottom chord in all areas where a rectangle 3-6-0 tall by 2-0-0 wide will fit between the bottom chord and any other members, with BCDL = 10.0psf.
5) Refer to girder(s) for truss to truss connections.
6) Provide mechanical connection (by others) of truss to bearing plate capable of withstanding 100 lb uplift at joint(s) except (jt=lb) 5=233.

This item has been electronically signed and sealed by ORegan, Philip, PE using a Digital Signature. Printed copies of this document are not considered signed and sealed and the signature must be verified on any electronic copies.

Philip J. O'Regan PE No.58126
MiTek Inc. DBA MiTek USA FL Cert 6634
16023 Swingley Ridge Rd. Chesterfield, MO 63017
Date:

April 14,2023

WARNING - Verify design parameters and READ NOTES ON THIS AND INCLUDED MITEK REFERENCE PAGE MII-7473 rev. 5/19/2020 BEFORE USE.
Design valid for use only with MiTek® connectors. This design is based only upon parameters shown, and is for an individual building component, not a truss system. Before use, the building designer must verify the applicability of design parameters and properly incorporate this design into the overall building design. Bracing indicated is to prevent buckling of individual truss web and/or chord members only. Additional temporary and permanent bracing is always required for stability and to prevent collapse with possible personal injury and property damage. For general guidance regarding the fabrication, storage, delivery, erection and bracing of trusses and truss systems, see ***ANSI/TPI1 Quality Criteria, DSB-89 and BCSI Building Component Safety Information*** available from Truss Plate Institute, 2670 Crain Highway, Suite 203 Waldorf, MD 20601

MiTek
16023 Swingley Ridge Rd
Chesterfield, MO 63017

Job	Truss	Truss Type	Qty	Ply	CJ CONST. - CADY RES.
3371626	T06	Piggyback Base	9	1	T30317753 Job Reference (optional)

Builders FirstSource (Lake City,FL), Lake City, FL - 32055, 8.530 s Mar 9 2023 MiTek Industries, Inc. Thu Apr 13 14:25:03 2023 Page 1
ID:Ys8zlwKNmTR0LjtaCjYR7AyUufK-MSYVwi8MbDxKObuY3AGo2emMcL1OeOok3IO97NzR63k

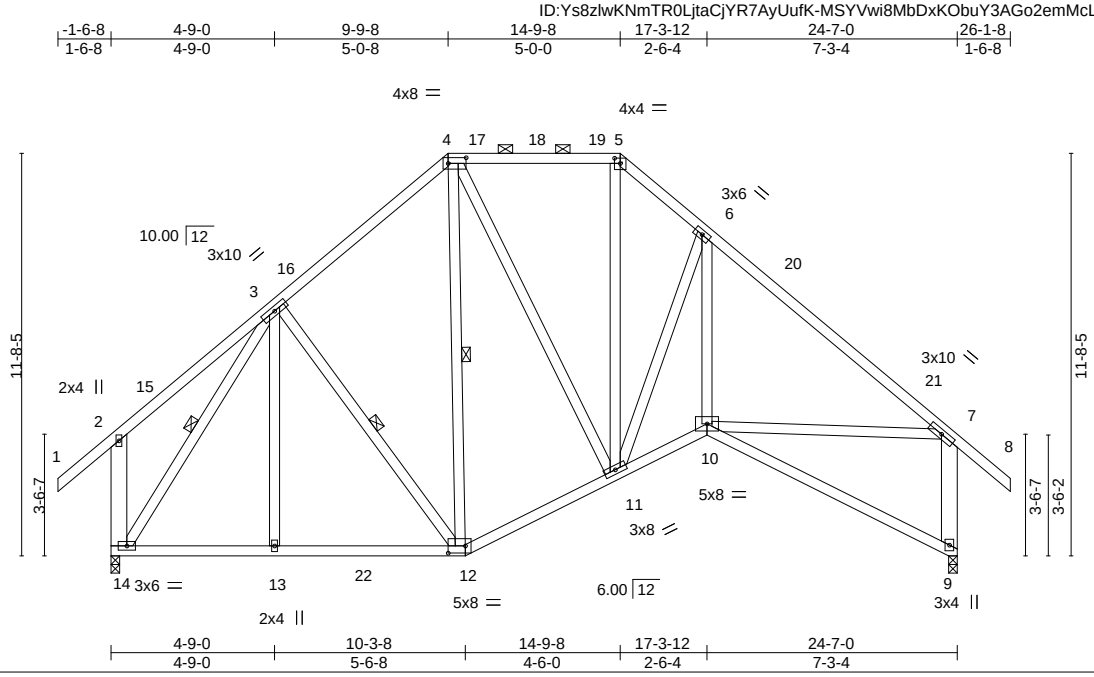

Plate Offsets (X,Y)-- [4:0-6-4,0-2-0], [5:0-2-0,0-1-13], [12:0-6-0,0-2-8]

LOADING (psf)		SPACING- 2-0-0		CSI.		DEFL.	in	(loc)	l/defl	L/d	PLATES	GRIP
TCLL	20.0	Plate Grip DOL	1.25	TC	0.49	Vert(LL)	-0.10	9-10	>999	240	MT20	244/190
TCDL	7.0	Lumber DOL	1.25	BC	0.43	Vert(CT)	-0.21	9-10	>999	180		
BCLL	0.0 *	Rep Stress Incr	YES	WB	0.78	Horz(CT)	0.07	9	n/a	n/a		
BCDL	10.0	Code FBC2020/TPI2014		Matrix-MS							Weight: 215 lb	FT = 20%

LUMBER-
TOP CHORD 2x4 SP No.2
BOT CHORD 2x4 SP No.2
WEBS 2x4 SP No.3 *Except*
2-14,7-9: 2x6 SP No.2

BRACING-
TOP CHORD Structural wood sheathing directly applied or 4-11-10 oc purlins, except end verticals, and 2-0-0 oc purlins (6-0-0 max.): 4-5.
BOT CHORD Rigid ceiling directly applied or 10-0-0 oc bracing.
WEBS 1 Row at midpt 3-12, 4-12, 3-14

REACTIONS. (size) 14=0-3-0, 9=0-3-0
Max Horz 14=-318(LC 10)
Max Uplift 14=-203(LC 12), 9=-203(LC 13)
Max Grav 14=1059(LC 2), 9=1040(LC 2)

FORCES. (lb) - Max. Comp./Max. Ten. - All forces 250 (lb) or less except when shown.
TOP CHORD 3-4=-717/239, 4-5=-609/228, 5-6=-849/292, 6-7=-1225/249, 2-14=-261/159, 7-9=-945/267
BOT CHORD 13-14=-208/670, 12-13=-208/670, 11-12=-166/676, 10-11=-131/1042
WEBS 4-11=-35/282, 5-11=-138/414, 6-11=-725/250, 6-10=-47/677, 3-14=-967/105, 7-10=-107/840, 3-13=0/273

NOTES-
1) Unbalanced roof live loads have been considered for this design.
2) Wind: ASCE 7-16; Vult=130mph (3-second gust) Vasd=101mph; TCDL=4.2psf; BCDL=3.0psf; h=20ft; Cat. II; Exp B; Encl., GCpi=0.18; MWFRS (envelope) gable end zone and C-C Exterior(2E) -1-6-8 to 1-5-8, Interior(1) 1-5-8 to 9-9-8, Exterior(2R) 9-9-8 to 14-0-7, Interior(1) 14-0-7 to 14-9-8, Exterior(2R) 14-9-8 to 19-0-7, Interior(1) 19-0-7 to 26-1-8 zone; end vertical left and right exposed;C-C for members and forces & MWFRS for reactions shown; Lumber DOL=1.60 plate grip DOL=1.60
3) Building Designer / Project engineer responsible for verifying applied roof live load shown covers rain loading requirements specific to the use of this truss component.
4) Provide adequate drainage to prevent water ponding.
5) This truss has been designed for a 10.0 psf bottom chord live load nonconcurrent with any other live loads.
6) * This truss has been designed for a live load of 20.0psf on the bottom chord in all areas where a rectangle 3-6-0 tall by 2-0-0 wide will fit between the bottom chord and any other members, with BCDL = 10.0psf.
7) Bearing at joint(s) 9 considers parallel to grain value using ANSI/TPI 1 angle to grain formula. Building designer should verify capacity of bearing surface.
8) Provide mechanical connection (by others) of truss to bearing plate capable of withstanding 100 lb uplift at joint(s) except (jt=lb) 14=203, 9=203.
9) Graphical purlin representation does not depict the size or the orientation of the purlin along the top and/or bottom chord.

This item has been electronically signed and sealed by ORegan, Philip, PE using a Digital Signature. Printed copies of this document are not considered signed and sealed and the signature must be verified on any electronic copies.

Philip J. O'Regan PE No.58126
MiTek Inc. DBA MiTek USA FL Cert 6634
16023 Swingley Ridge Rd. Chesterfield, MO 63017
Date:

April 14,2023

WARNING - Verify design parameters and READ NOTES ON THIS AND INCLUDED MITEK REFERENCE PAGE MII-7473 rev. 5/19/2020 BEFORE USE.
Design valid for use only with MiTek® connectors. This design is based only upon parameters shown, and is for an individual building component, not a truss system. Before use, the building designer must verify the applicability of design parameters and properly incorporate this design into the overall building design. Bracing indicated is to prevent buckling of individual truss web and/or chord members only. Additional temporary and permanent bracing is always required for stability and to prevent collapse with possible personal injury and property damage. For general guidance regarding the fabrication, storage, delivery, erection and bracing of trusses and truss systems, see ***ANSI/TPI1 Quality Criteria, DSB-89 and BCSI Building Component Safety Information*** available from Truss Plate Institute, 2670 Crain Highway, Suite 203 Waldorf, MD 20601

MiTek
16023 Swingley Ridge Rd
Chesterfield, MO 63017

Job	Truss	Truss Type	Qty	Ply	CJ CONST. - CADY RES.
3371626	T06G	GABLE	1	1	T30317754 Job Reference (optional)

Builders FirstSource (Lake City,FL), Lake City, FL - 32055, 8.530 s Mar 9 2023 MiTek Industries, Inc. Thu Apr 13 14:25:06 2023 Page 1
ID:Ys8zlwKNmTR0LjtaCjYR7AyUufK-m1EeYjAFu8JvF2d7kIpVgGOwLY7irv0BlGdpkizR63h

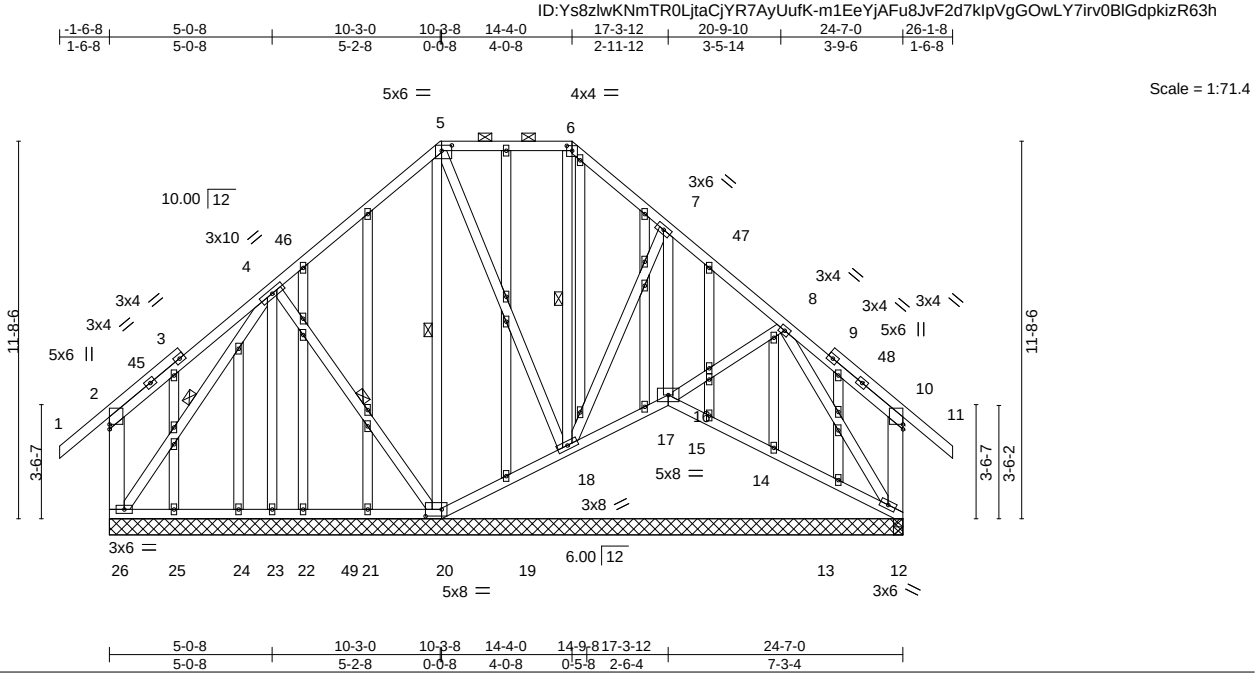

Plate Offsets (X,Y)-- [5:0-3-12,0-2-0], [6:0-2-0,0-1-13], [20:0-6-0,0-2-8]

LOADING (psf)		SPACING-	2-0-0	CSI.		DEFL.	in	(loc)	l/defl	L/d	PLATES	GRIP
TCLL	20.0	Plate Grip DOL	1.25	TC	0.26	Vert(LL)	-0.00	18	>999	240	MT20	244/190
TCDL	7.0	Lumber DOL	1.25	BC	0.07	Vert(CT)	-0.01	18	>999	180		
BCLL	0.0 *	Rep Stress Incr	YES	WB	0.17	Horz(CT)	-0.01	12	n/a	n/a		
BCDL	10.0	Code FBC2020/TPI2014		Matrix-S							Weight: 320 lb	FT = 20%

LUMBER-
TOP CHORD 2x4 SP No.2
BOT CHORD 2x4 SP No.2
WEBS 2x4 SP No.3 *Except*
2-26,10-12: 2x6 SP No.2
OTHERS 2x4 SP No.3

BRACING-
TOP CHORD Structural wood sheathing directly applied or 6-0-0 oc purlins, except end verticals, and 2-0-0 oc purlins (6-0-0 max.): 5-6.
BOT CHORD Rigid ceiling directly applied or 10-0-0 oc bracing, Except: 6-0-0 oc bracing: 16-17.
WEBS 1 Row at midpt 4-20, 6-18, 4-26, 5-20

REACTIONS. All bearings 24-7-0.
(lb) - Max Horz 26=-312(LC 10)
Max Uplift All uplift 100 lb or less at joint(s) 23, 26 except 20=-179(LC 12), 16=-106(LC 13), 12=-111(LC 13)
Max Grav All reactions 250 lb or less at joint(s) 23, 19, 13, 14, 15, 17, 25, 24, 22, 21 except 20=310(LC 19), 16=389(LC 1), 26=352(LC 23), 12=336(LC 20), 12=326(LC 1)

FORCES. (lb) - Max. Comp./Max. Ten. - All forces 250 (lb) or less except when shown.
TOP CHORD 2-26=-256/158
WEBS 7-16=-315/80, 5-20=-254/39

NOTES-
1) Unbalanced roof live loads have been considered for this design.
2) Wind: ASCE 7-16; Vult=130mph (3-second gust) Vasd=101mph; TCDL=4.2psf; BCDL=3.0psf; h=20ft; Cat. II; Exp B; Encl., GCpi=0.18; MWFRS (envelope) gable end zone and C-C Exterior(2E) -1-6-8 to 1-5-8, Interior(1) 1-5-8 to 10-3-8, Exterior(2E) 10-3-8 to 14-4-0, Exterior(2R) 14-4-0 to 18-6-15, Interior(1) 18-6-15 to 26-1-8 zone; end vertical left and right exposed;C-C for members and forces & MWFRS for reactions shown; Lumber DOL=1.60 plate grip DOL=1.60
3) Truss designed for wind loads in the plane of the truss only. For studs exposed to wind (normal to the face), see Standard Industry Gable End Details as applicable, or consult qualified building designer as per ANSI/TPI 1.
4) Building Designer / Project engineer responsible for verifying applied roof live load shown covers rain loading requirements specific to the use of this truss component.
5) Provide adequate drainage to prevent water ponding.
6) All plates are 2x4 MT20 unless otherwise indicated.
7) Gable studs spaced at 2-0-0 oc.
8) This truss has been designed for a 10.0 psf bottom chord live load nonconcurrent with any other live loads.
9) * This truss has been designed for a live load of 20.0psf on the bottom chord in all areas where a rectangle 3-6-0 tall by 2-0-0 wide will fit between the bottom chord and any other members, with BCDL = 10.0psf.
10) Provide mechanical connection (by others) of truss to bearing plate capable of withstanding 100 lb uplift at joint(s) 23, 26 except (jt=lb) 20=179, 16=106, 12=111.
11) Graphical purlin representation does not depict the size or the orientation of the purlin along the top and/or bottom chord.

This item has been electronically signed and sealed by ORegan, Philip, PE using a Digital Signature. Printed copies of this document are not considered signed and sealed and the signature must be verified on any electronic copies.

Philip J. O'Regan PE No.58126
MiTek Inc. DBA MiTek USA FL Cert 6634
16023 Swingley Ridge Rd. Chesterfield, MO 63017
Date:

April 14,2023

WARNING - Verify design parameters and READ NOTES ON THIS AND INCLUDED MITEK REFERENCE PAGE MII-7473 rev. 5/19/2020 BEFORE USE.
Design valid for use only with MiTek® connectors. This design is based only upon parameters shown, and is for an individual building component, not a truss system. Before use, the building designer must verify the applicability of design parameters and properly incorporate this design into the overall building design. Bracing indicated is to prevent buckling of individual truss web and/or chord members only. Additional temporary and permanent bracing is always required for stability and to prevent collapse with possible personal injury and property damage. For general guidance regarding the fabrication, storage, delivery, erection and bracing of trusses and truss systems, see ***ANSI/TPI1 Quality Criteria, DSB-89 and BCSI Building Component Safety Information*** available from Truss Plate Institute, 2670 Crain Highway, Suite 203 Waldorf, MD 20601

MiTek
16023 Swingley Ridge Rd
Chesterfield, MO 63017

Job	Truss	Truss Type	Qty	Ply	CJ CONST. - CADY RES.
3371626	T07	Piggyback Base	2	1	T30317755 Job Reference (optional)

Builders FirstSource (Lake City,FL), Lake City, FL - 32055, 8.530 s Mar 9 2023 MiTek Industries, Inc. Thu Apr 13 14:25:07 2023 Page 1
ID:Ys8zlwKNmTR0LjtaCjYR7AyUufK-EDo0m3BtfSRmsCCJI0KkCUw5gyI0aKCK_wMNG8zR63g

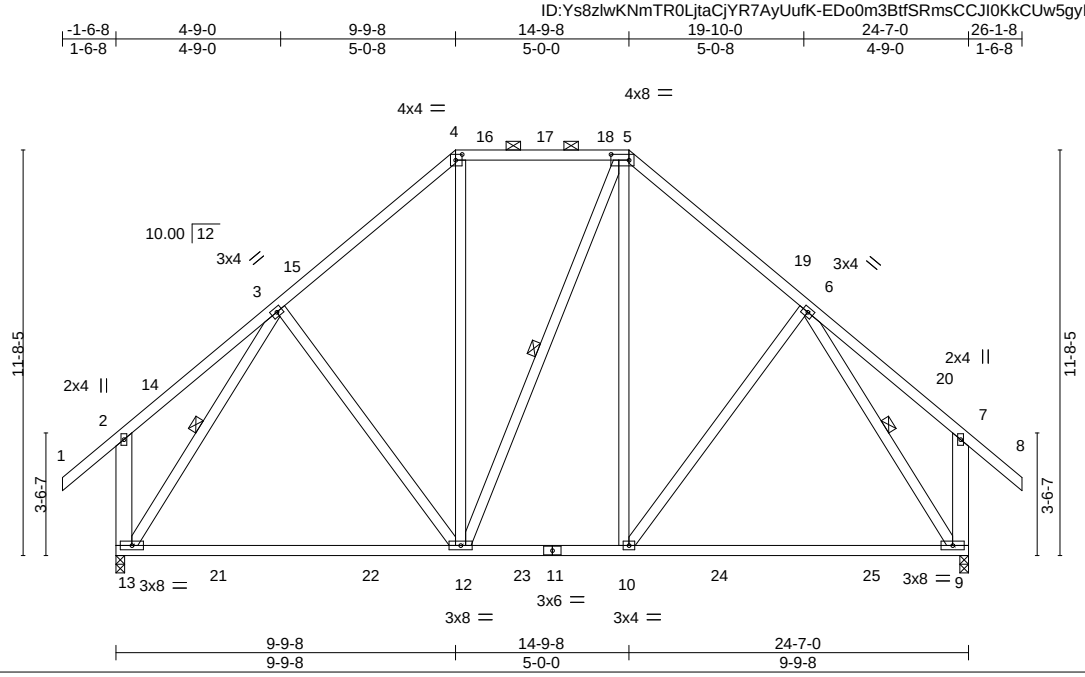

Plate Offsets (X,Y)-- [4:0-2-4,0-2-0], [5:0-6-4,0-2-0]

LOADING (psf)		SPACING- 2-0-0		CSI.		DEFL.	in	(loc)	l/defl	L/d	PLATES	GRIP
TCLL	20.0	Plate Grip DOL	1.25	TC	0.29	Vert(LL)	-0.36	9-10	>802	240	MT20	244/190
TCDL	7.0	Lumber DOL	1.25	BC	0.77	Vert(CT)	-0.58	9-10	>500	180		
BCLL	0.0 *	Rep Stress Incr	YES	WB	0.31	Horz(CT)	0.02	9	n/a	n/a		
BCDL	10.0	Code FBC2020/TPI2014		Matrix-MS							Weight: 203 lb	FT = 20%

LUMBER-
TOP CHORD 2x4 SP No.2
BOT CHORD 2x4 SP No.1
WEBS 2x4 SP No.3 *Except*
2-13,7-9: 2x6 SP No.2

BRACING-
TOP CHORD Structural wood sheathing directly applied or 6-0-0 oc purlins, except end verticals, and 2-0-0 oc purlins (6-0-0 max.): 4-5.
BOT CHORD Rigid ceiling directly applied or 10-0-0 oc bracing.
WEBS 1 Row at midpt 5-12, 3-13, 6-9

REACTIONS. (size) 13=0-3-0, 9=0-3-0
Max Horz 13=318(LC 11)
Max Uplift 13=-203(LC 12), 9=-203(LC 13)
Max Grav 13=1118(LC 2), 9=1121(LC 2)

FORCES. (lb) - Max. Comp./Max. Ten. - All forces 250 (lb) or less except when shown.
TOP CHORD 3-4=-794/237, 4-5=-553/238, 5-6=-798/237, 2-13=-303/147, 7-9=-303/147
BOT CHORD 12-13=-216/646, 10-12=-96/604, 9-10=-88/520
WEBS 4-12=-84/288, 5-10=-95/338, 3-13=-827/137, 6-9=-831/137

NOTES-
1) Unbalanced roof live loads have been considered for this design.
2) Wind: ASCE 7-16; Vult=130mph (3-second gust) Vasd=101mph; TCDL=4.2psf; BCDL=3.0psf; h=20ft; Cat. II; Exp B; Encl., GCpi=0.18; MWFRS (envelope) gable end zone and C-C Exterior(2E) -1-6-8 to 1-5-8, Interior(1) 1-5-8 to 9-9-8, Exterior(2R) 9-9-8 to 14-0-7, Interior(1) 14-0-7 to 14-9-8, Exterior(2R) 14-9-8 to 19-0-7, Interior(1) 19-0-7 to 26-1-8 zone; end vertical left and right exposed;C-C for members and forces & MWFRS for reactions shown; Lumber DOL=1.60 plate grip DOL=1.60
3) Building Designer / Project engineer responsible for verifying applied roof live load shown covers rain loading requirements specific to the use of this truss component.
4) Provide adequate drainage to prevent water ponding.
5) This truss has been designed for a 10.0 psf bottom chord live load nonconcurrent with any other live loads.
6) * This truss has been designed for a live load of 20.0psf on the bottom chord in all areas where a rectangle 3-6-0 tall by 2-0-0 wide will fit between the bottom chord and any other members, with BCDL = 10.0psf.
7) Provide mechanical connection (by others) of truss to bearing plate capable of withstanding 100 lb uplift at joint(s) except (jt=lb) 13=203, 9=203.
8) Graphical purlin representation does not depict the size or the orientation of the purlin along the top and/or bottom chord.

This item has been electronically signed and sealed by ORegan, Philip, PE using a Digital Signature. Printed copies of this document are not considered signed and sealed and the signature must be verified on any electronic copies.

Philip J. O'Regan PE No.58126
MiTek Inc. DBA MiTek USA FL Cert 6634
16023 Swingley Ridge Rd. Chesterfield, MO 63017
Date:

April 14,2023

WARNING - Verify design parameters and READ NOTES ON THIS AND INCLUDED MITEK REFERENCE PAGE MII-7473 rev. 5/19/2020 BEFORE USE.
Design valid for use only with MiTek® connectors. This design is based only upon parameters shown, and is for an individual building component, not a truss system. Before use, the building designer must verify the applicability of design parameters and properly incorporate this design into the overall building design. Bracing indicated is to prevent buckling of individual truss web and/or chord members only. Additional temporary and permanent bracing is always required for stability and to prevent collapse with possible personal injury and property damage. For general guidance regarding the fabrication, storage, delivery, erection and bracing of trusses and truss systems, see ***ANSI/TPI1 Quality Criteria, DSB-89 and BCSI Building Component Safety Information*** available from Truss Plate Institute, 2670 Crain Highway, Suite 203 Waldorf, MD 20601

MiTek
16023 Swingley Ridge Rd
Chesterfield, MO 63017

Job	Truss	Truss Type	Qty	Ply	CJ CONST. - CADY RES.
3371626	T08	Piggyback Base	5	1	T30317756 Job Reference (optional)

Builders FirstSource (Lake City,FL), Lake City, FL - 32055, 8.530 s Mar 9 2023 MiTek Industries, Inc. Thu Apr 13 14:25:09 2023 Page 1
ID:Ys8zlwKNmTR0LjtaCjYR7AyUufK-BcvmAlD7A3hT6WLiPRNCIv0R8l?Z2EhdSErTL1zR63e

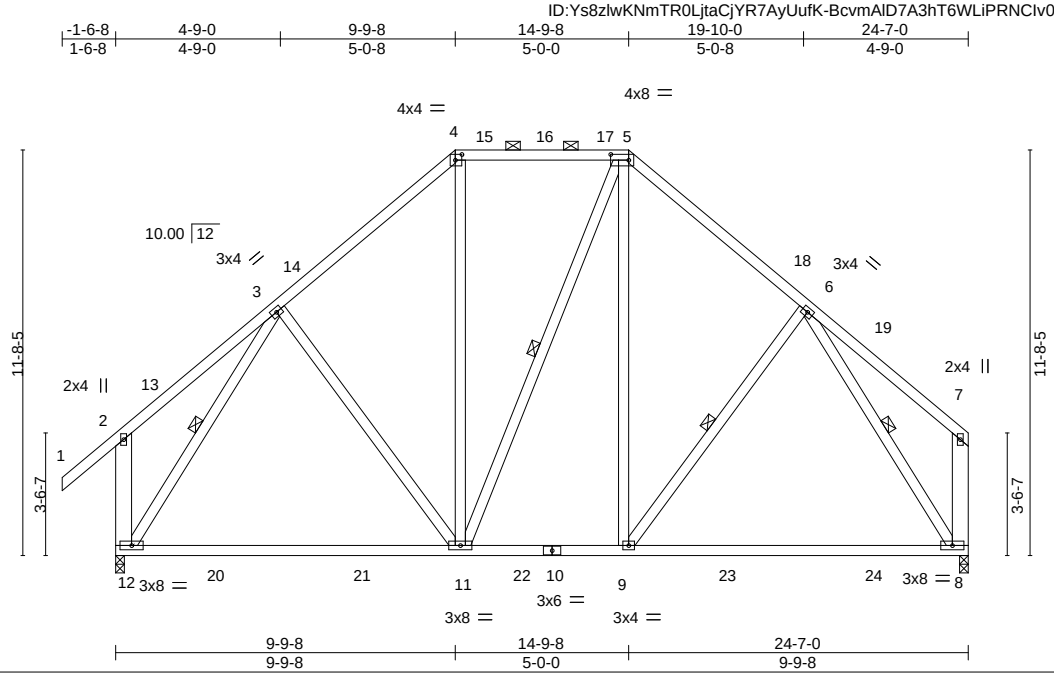

Plate Offsets (X,Y)-- [4:0-2-4,0-2-0], [5:0-6-4,0-2-0]

LOADING (psf)		SPACING- 2-0-0		CSI.		DEFL.	in	(loc)	l/defl	L/d	PLATES	GRIP
TCLL	20.0	Plate Grip DOL	1.25	TC	0.29	Vert(LL)	-0.36	8-9	>812	240	MT20	244/190
TCDL	7.0	Lumber DOL	1.25	BC	0.76	Vert(CT)	-0.57	8-9	>504	180		
BCLL	0.0 *	Rep Stress Incr	YES	WB	0.31	Horz(CT)	0.02	8	n/a	n/a		
BCDL	10.0	Code FBC2020/TPI2014		Matrix-MS							Weight: 200 lb	FT = 20%

LUMBER-
TOP CHORD 2x4 SP No.2
BOT CHORD 2x4 SP No.1
WEBS 2x4 SP No.3 *Except*
2-12,7-8: 2x6 SP No.2

BRACING-
TOP CHORD Structural wood sheathing directly applied or 6-0-0 oc purlins, except end verticals, and 2-0-0 oc purlins (6-0-0 max.): 4-5.
BOT CHORD Rigid ceiling directly applied or 10-0-0 oc bracing.
WEBS 1 Row at midpt 5-11, 6-9, 3-12, 6-8

REACTIONS. (size) 12=0-3-0, 8=0-3-0
Max Horz 12=307(LC 9)
Max Uplift 12=-201(LC 12), 8=-169(LC 13)
Max Grav 12=1118(LC 2), 8=1038(LC 2)

FORCES. (lb) - Max. Comp./Max. Ten. - All forces 250 (lb) or less except when shown.
TOP CHORD 3-4=-795/234, 4-5=-553/237, 5-6=-801/233, 2-12=-302/147
BOT CHORD 11-12=-229/630, 9-11=-108/591, 8-9=-140/514
WEBS 4-11=-81/287, 5-9=-90/343, 3-12=-827/134, 6-8=-820/193

NOTES-
1) Unbalanced roof live loads have been considered for this design.
2) Wind: ASCE 7-16; Vult=130mph (3-second gust) Vasd=101mph; TCDL=4.2psf; BCDL=3.0psf; h=20ft; Cat. II; Exp B; Encl., GCpi=0.18; MWFRS (envelope) gable end zone and C-C Exterior(2E) -1-6-8 to 1-5-8, Interior(1) 1-5-8 to 9-9-8, Exterior(2R) 9-9-8 to 14-0-7, Interior(1) 14-0-7 to 14-9-8, Exterior(2R) 14-9-8 to 19-0-7, Interior(1) 19-0-7 to 24-4-4 zone; end vertical left and right exposed;C-C for members and forces & MWFRS for reactions shown; Lumber DOL=1.60 plate grip DOL=1.60
3) Building Designer / Project engineer responsible for verifying applied roof live load shown covers rain loading requirements specific to the use of this truss component.
4) Provide adequate drainage to prevent water ponding.
5) This truss has been designed for a 10.0 psf bottom chord live load nonconcurrent with any other live loads.
6) * This truss has been designed for a live load of 20.0psf on the bottom chord in all areas where a rectangle 3-6-0 tall by 2-0-0 wide will fit between the bottom chord and any other members, with BCDL = 10.0psf.
7) Provide mechanical connection (by others) of truss to bearing plate capable of withstanding 100 lb uplift at joint(s) except (jt=lb) 12=201, 8=169.
8) Graphical purlin representation does not depict the size or the orientation of the purlin along the top and/or bottom chord.

This item has been electronically signed and sealed by ORegan, Philip, PE using a Digital Signature. Printed copies of this document are not considered signed and sealed and the signature must be verified on any electronic copies.

Philip J. O'Regan PE No.58126
MiTek Inc. DBA MiTek USA FL Cert 6634
16023 Swingley Ridge Rd. Chesterfield, MO 63017
Date:

April 14,2023

WARNING - Verify design parameters and READ NOTES ON THIS AND INCLUDED MITEK REFERENCE PAGE MII-7473 rev. 5/19/2020 BEFORE USE.
Design valid for use only with MiTek® connectors. This design is based only upon parameters shown, and is for an individual building component, not a truss system. Before use, the building designer must verify the applicability of design parameters and properly incorporate this design into the overall building design. Bracing indicated is to prevent buckling of individual truss web and/or chord members only. Additional temporary and permanent bracing is always required for stability and to prevent collapse with possible personal injury and property damage. For general guidance regarding the fabrication, storage, delivery, erection and bracing of trusses and truss systems, see ***ANSI/TPI1 Quality Criteria, DSB-89 and BCSI Building Component Safety Information*** available from Truss Plate Institute, 2670 Crain Highway, Suite 203 Waldorf, MD 20601

MiTek
16023 Swingley Ridge Rd
Chesterfield, MO 63017

Job	Truss	Truss Type	Qty	Ply	CJ CONST. - CADY RES.
3371626	T09	MONOPITCH GIRDER	1	1	T30317757 Job Reference (optional)

Builders FirstSource (Lake City,FL), Lake City, FL - 32055, 8.530 s Mar 9 2023 MiTek Industries, Inc. Thu Apr 13 14:25:10 2023 Page 1
ID:Ys8zlwKNmTR0LjtaCjYR7AyUufK-foT9O5DlxNpKjgwuz8uRq6Yc99UGniEmgub1tTzR63d

Scale = 1:66.4

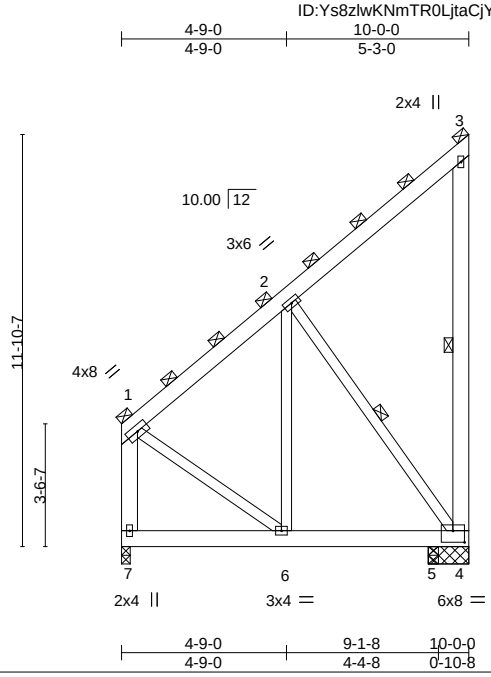

Plate Offsets (X,Y)-- [4:0-4-0,0-4-0]

LOADING (psf)		SPACING- 4-0-0		CSI.		DEFL. in (loc) l/defl L/d		PLATES	GRIP
TCLL	20.0	Plate Grip DOL	1.25	TC	0.27	Vert(LL) -0.01 6-7 >999 240		MT20	244/190
TCDL	7.0	Lumber DOL	1.25	BC	0.16	Vert(CT) -0.02 6-7 >999 180			
BCLL	0.0 *	Rep Stress Incr	NO	WB	0.22	Horz(CT) -0.00 4 n/a n/a			
BCDL	10.0	Code FBC2020/TPI2014		Matrix-MS				Weight: 116 lb	FT = 20%

LUMBER-
TOP CHORD 2x6 SP No.2
BOT CHORD 2x6 SP No.2
WEBS 2x4 SP No.3 *Except*
3-4,1-7: 2x6 SP No.2

BRACING-
TOP CHORD 2-0-0 oc purlins (6-0-0 max.), except end verticals
(Switched from sheeted: Spacing > 2-8-0).
BOT CHORD Rigid ceiling directly applied or 9-5-7 oc bracing.
WEBS 1 Row at midpt 3-4, 2-4

REACTIONS. (size) 7=0-3-0, 4=1-2-0, 5=0-3-8
Max Horz 7=547(LC 12)
Max Uplift 4=-635(LC 12)
Max Grav 7=691(LC 1), 4=638(LC 19), 5=340(LC 3)

FORCES. (lb) - Max. Comp./Max. Ten. - All forces 250 (lb) or less except when shown.
TOP CHORD 1-2=-487/0, 1-7=-602/0
BOT CHORD 6-7=-615/392, 5-6=-346/364, 4-5=-346/364
WEBS 2-6=-119/255, 2-4=-613/583, 1-6=-35/391

NOTES-
1) Wind: ASCE 7-16; Vult=130mph (3-second gust) Vasd=101mph; TCDL=4.2psf; BCDL=3.0psf; h=20ft; Cat. II; Exp B; Encl., GCpi=0.18; MWFRS (envelope) gable end zone and C-C Exterior(2E) 0-2-12 to 3-2-12, Interior(1) 3-2-12 to 9-9-4 zone;C-C for members and forces & MWFRS for reactions shown; Lumber DOL=1.60 plate grip DOL=1.60
2) Building Designer / Project engineer responsible for verifying applied roof live load shown covers rain loading requirements specific to the use of this truss component.
3) This truss has been designed for a 10.0 psf bottom chord live load nonconcurrent with any other live loads.
4) * This truss has been designed for a live load of 20.0psf on the bottom chord in all areas where a rectangle 3-6-0 tall by 2-0-0 wide will fit between the bottom chord and any other members.
5) Provide mechanical connection (by others) of truss to bearing plate capable of withstanding 100 lb uplift at joint(s) except (jt=lb) 4=635.
6) Graphical purlin representation does not depict the size or the orientation of the purlin along the top and/or bottom chord.

This item has been electronically signed and sealed by ORegan, Philip, PE using a Digital Signature. Printed copies of this document are not considered signed and sealed and the signature must be verified on any electronic copies.

Philip J. O'Regan PE No.58126
MiTek Inc. DBA MiTek USA FL Cert 6634
16023 Swingley Ridge Rd. Chesterfield, MO 63017
Date:

April 14,2023

WARNING - Verify design parameters and READ NOTES ON THIS AND INCLUDED MITEK REFERENCE PAGE MII-7473 rev. 5/19/2020 BEFORE USE.
Design valid for use only with MiTek® connectors. This design is based only upon parameters shown, and is for an individual building component, not a truss system. Before use, the building designer must verify the applicability of design parameters and properly incorporate this design into the overall building design. Bracing indicated is to prevent buckling of individual truss web and/or chord members only. Additional temporary and permanent bracing is always required for stability and to prevent collapse with possible personal injury and property damage. For general guidance regarding the fabrication, storage, delivery, erection and bracing of trusses and truss systems, see ***ANSI/TPI1 Quality Criteria, DSB-89 and BCSI Building Component Safety Information*** available from Truss Plate Institute, 2670 Crain Highway, Suite 203 Waldorf, MD 20601

16023 Swingley Ridge Rd
Chesterfield, MO 63017

Job	Truss	Truss Type	Qty	Ply	CJ CONST. - CADY RES.
3371626	T10	Common	5	1	T30317758 Job Reference (optional)

Builders FirstSource (Lake City,FL), Lake City, FL - 32055, 8.530 s Mar 9 2023 MiTek Industries, Inc. Thu Apr 13 14:25:11 2023 Page 1
ID:Ys8zlwKNmTR0LjtaCjYR7AyUufK-7_1XbREOigxBLpV4XsPgNK5l?ZnJWBKwvYKaPvzR63c

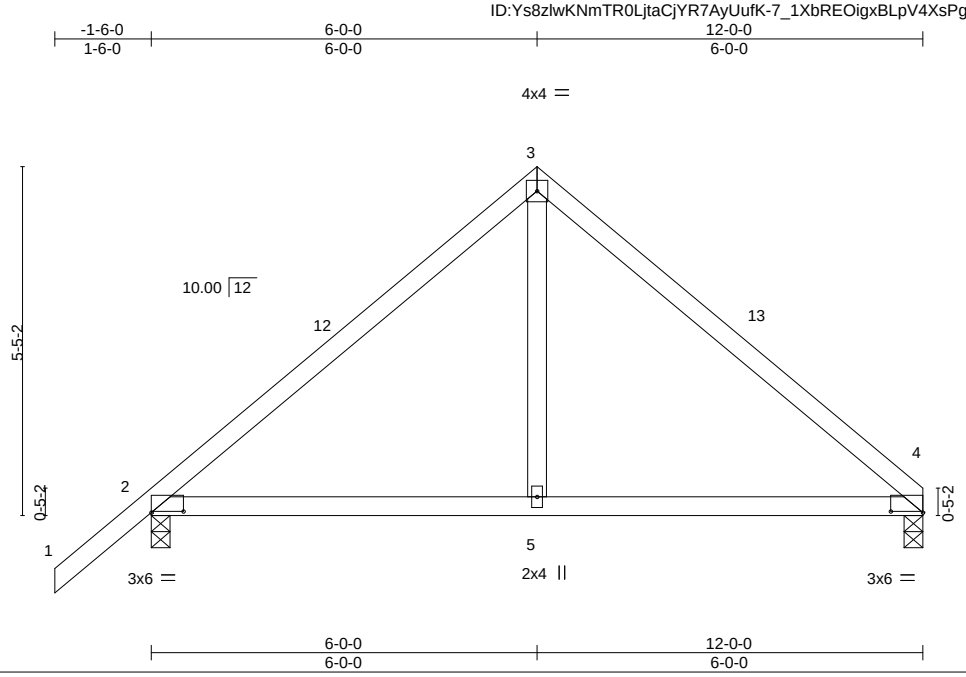

Plate Offsets (X,Y)-- [2:0-6-0,0-0-3], [4:0-6-0,0-0-4]

LOADING (psf)		SPACING- 2-0-0		CSI.		DEFL.	in	(loc)	l/defl	L/d	PLATES	GRIP
TCLL	20.0	Plate Grip DOL	1.25	TC	0.40	Vert(LL)	0.06	5-8	>999	240	MT20	244/190
TCDL	7.0	Lumber DOL	1.25	BC	0.36	Vert(CT)	-0.08	5-8	>999	180		
BCLL	0.0 *	Rep Stress Incr	YES	WB	0.11	Horz(CT)	0.00	4	n/a	n/a		
BCDL	10.0	Code FBC2020/TPI2014		Matrix-MS							Weight: 52 lb	FT = 20%

LUMBER-
TOP CHORD 2x4 SP No.2
BOT CHORD 2x4 SP No.2
WEBS 2x4 SP No.3

BRACING-
TOP CHORD Structural wood sheathing directly applied or 6-0-0 oc purlins.
BOT CHORD Rigid ceiling directly applied or 10-0-0 oc bracing.

REACTIONS. (size) 4=0-3-8, 2=0-3-8
Max Horz 2=128(LC 9)
Max Uplift 4=-80(LC 13), 2=-117(LC 12)
Max Grav 4=439(LC 1), 2=530(LC 1)

FORCES. (lb) - Max. Comp./Max. Ten. - All forces 250 (lb) or less except when shown.
TOP CHORD 2-3=-489/163, 3-4=-486/166
BOT CHORD 2-5=-28/303, 4-5=-28/303
WEBS 3-5=-21/280

NOTES-
1) Unbalanced roof live loads have been considered for this design.
2) Wind: ASCE 7-16; Vult=130mph (3-second gust) Vasd=101mph; TCDL=4.2psf; BCDL=3.0psf; h=20ft; Cat. II; Exp B; Encl., GCpi=0.18; MWFRS (envelope) gable end zone and C-C Exterior(2E) -1-6-0 to 1-6-0, Interior(1) 1-6-0 to 6-0-0, Exterior(2R) 6-0-0 to 9-0-0, Interior(1) 9-0-0 to 12-0-0 zone;C-C for members and forces & MWFRS for reactions shown; Lumber DOL=1.60 plate grip DOL=1.60
3) Building Designer / Project engineer responsible for verifying applied roof live load shown covers rain loading requirements specific to the use of this truss component.
4) This truss has been designed for a 10.0 psf bottom chord live load nonconcurrent with any other live loads.
5) * This truss has been designed for a live load of 20.0psf on the bottom chord in all areas where a rectangle 3-6-0 tall by 2-0-0 wide will fit between the bottom chord and any other members.
6) Provide mechanical connection (by others) of truss to bearing plate capable of withstanding 100 lb uplift at joint(s) 4 except (jt=lb) 2=117.

This item has been electronically signed and sealed by ORegan, Philip, PE using a Digital Signature. Printed copies of this document are not considered signed and sealed and the signature must be verified on any electronic copies.

Philip J. O'Regan PE No.58126
MiTek Inc. DBA MiTek USA FL Cert 6634
16023 Swingley Ridge Rd. Chesterfield, MO 63017
Date:

April 14,2023

WARNING - Verify design parameters and READ NOTES ON THIS AND INCLUDED MITEK REFERENCE PAGE MII-7473 rev. 5/19/2020 BEFORE USE.
Design valid for use only with MiTek® connectors. This design is based only upon parameters shown, and is for an individual building component, not a truss system. Before use, the building designer must verify the applicability of design parameters and properly incorporate this design into the overall building design. Bracing indicated is to prevent buckling of individual truss web and/or chord members only. Additional temporary and permanent bracing is always required for stability and to prevent collapse with possible personal injury and property damage. For general guidance regarding the fabrication, storage, delivery, erection and bracing of trusses and truss systems, see ***ANSI/TPI1 Quality Criteria, DSB-89 and BCSI Building Component Safety Information*** available from Truss Plate Institute, 2670 Crain Highway, Suite 203 Waldorf, MD 20601

MiTek
16023 Swingley Ridge Rd
Chesterfield, MO 63017

Job	Truss	Truss Type	Qty	Ply	CJ CONST. - CADY RES.
3371626	T10G	Common Supported Gable	1	1	T30317759 Job Reference (optional)

Builders FirstSource (Lake City,FL), Lake City, FL - 32055, 8.530 s Mar 9 2023 MiTek Industries, Inc. Thu Apr 13 14:25:13 2023 Page 1
ID:Ys8zlwKNmTR0LjtaCjYR7AyUufK-3N9H06GeEICva7fTeHR8SlA8ZNXj_6pDMsphUozR63a

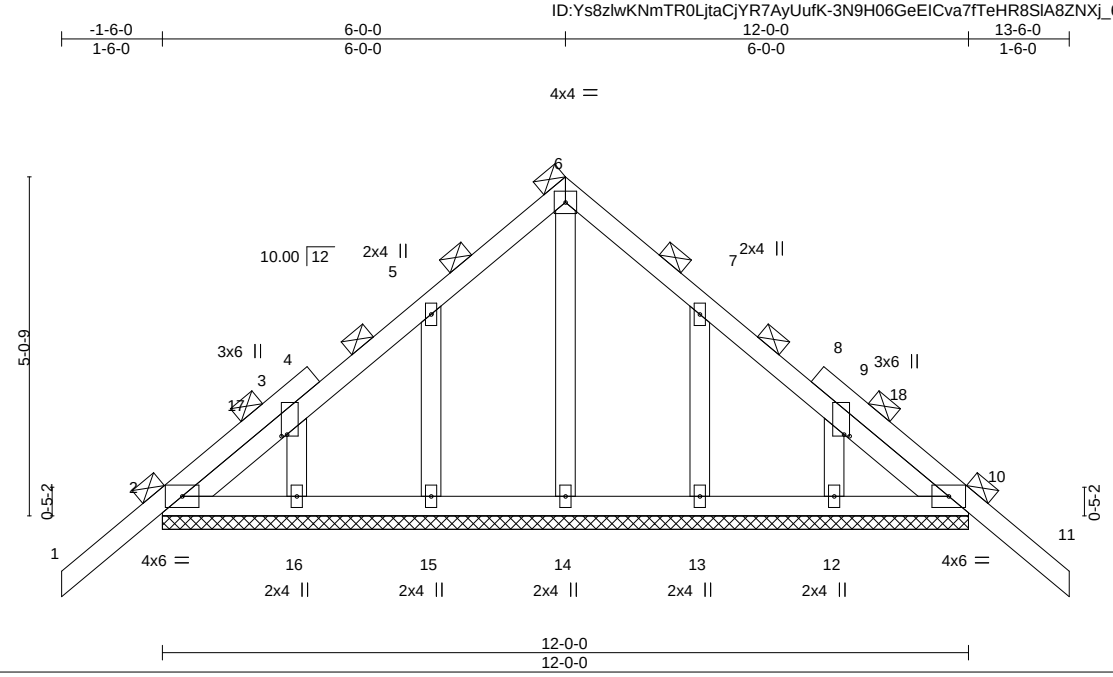

Plate Offsets (X,Y)-- [3:0-0-5,0-1-0], [9:0-0-5,0-1-0]

LOADING (psf)		SPACING-	2-0-0	CSI.		DEFL.	in	(loc)	l/defl	L/d	PLATES	GRIP
TCLL	20.0	Plate Grip DOL	1.25	TC	0.20	Vert(LL)	-0.01	11	n/r	120	MT20	244/190
TCDL	7.0	Lumber DOL	1.25	BC	0.05	Vert(CT)	-0.01	11	n/r	120		
BCLL	0.0 *	Rep Stress Incr	YES	WB	0.04	Horz(CT)	0.00	10	n/a	n/a		
BCDL	10.0	Code FBC2020/TPI2014		Matrix-S							Weight: 73 lb	FT = 20%

LUMBER-
TOP CHORD 2x4 SP No.2
BOT CHORD 2x4 SP No.2
OTHERS 2x4 SP No.3

BRACING-
TOP CHORD 2-0-0 oc purlins (6-0-0 max.).
BOT CHORD Rigid ceiling directly applied or 10-0-0 oc bracing.

REACTIONS. All bearings 12-0-0.
(lb) - Max Horz 2=129(LC 11)
Max Uplift All uplift 100 lb or less at joint(s) 2, 10, 15, 16, 13, 12
Max Grav All reactions 250 lb or less at joint(s) 2, 10, 14, 15, 16, 13, 12

FORCES. (lb) - Max. Comp./Max. Ten. - All forces 250 (lb) or less except when shown.

NOTES-
1) Unbalanced roof live loads have been considered for this design.
2) Wind: ASCE 7-16; Vult=130mph (3-second gust) Vasd=101mph; TCDL=4.2psf; BCDL=3.0psf; h=20ft; Cat. II; Exp B; Encl., GCpi=0.18; MWFRS (envelope) gable end zone and C-C Corner(3E) -1-6-0 to 1-6-0, Exterior(2N) 1-6-0 to 6-0-0, Corner(3R) 6-0-0 to 9-0-0, Exterior(2N) 9-0-0 to 13-6-0 zone;C-C for members and forces & MWFRS for reactions shown; Lumber DOL=1.60 plate grip DOL=1.60
3) Truss designed for wind loads in the plane of the truss only. For studs exposed to wind (normal to the face), see Standard Industry Gable End Details as applicable, or consult qualified building designer as per ANSI/TPI 1.
4) Building Designer / Project engineer responsible for verifying applied roof live load shown covers rain loading requirements specific to the use of this truss component.
5) Gable requires continuous bottom chord bearing.
6) Gable studs spaced at 2-0-0 oc.
7) This truss has been designed for a 10.0 psf bottom chord live load nonconcurrent with any other live loads.
8) * This truss has been designed for a live load of 20.0psf on the bottom chord in all areas where a rectangle 3-6-0 tall by 2-0-0 wide will fit between the bottom chord and any other members.
9) Provide mechanical connection (by others) of truss to bearing plate capable of withstanding 100 lb uplift at joint(s) 2, 10, 15, 16, 13, 12.
10) Graphical purlin representation does not depict the size or the orientation of the purlin along the top and/or bottom chord.

This item has been electronically signed and sealed by ORegan, Philip, PE using a Digital Signature. Printed copies of this document are not considered signed and sealed and the signature must be verified on any electronic copies.

Philip J. O'Regan PE No.58126
MiTek Inc. DBA MiTek USA FL Cert 6634
16023 Swingley Ridge Rd. Chesterfield, MO 63017
Date:

April 14,2023

WARNING - Verify design parameters and READ NOTES ON THIS AND INCLUDED MITEK REFERENCE PAGE MII-7473 rev. 5/19/2020 BEFORE USE.
Design valid for use only with MiTek® connectors. This design is based only upon parameters shown, and is for an individual building component, not a truss system. Before use, the building designer must verify the applicability of design parameters and properly incorporate this design into the overall building design. Bracing indicated is to prevent buckling of individual truss web and/or chord members only. Additional temporary and permanent bracing is always required for stability and to prevent collapse with possible personal injury and property damage. For general guidance regarding the fabrication, storage, delivery, erection and bracing of trusses and truss systems, see ***ANSI/TPI1 Quality Criteria, DSB-89 and BCSI Building Component Safety Information*** available from Truss Plate Institute, 2670 Crain Highway, Suite 203 Waldorf, MD 20601

MiTek
16023 Swingley Ridge Rd
Chesterfield, MO 63017

Job	Truss	Truss Type	Qty	Ply	CJ CONST. - CADY RES.
3371626	T11	Common Girder	1	1	T30317760 Job Reference (optional)

Builders FirstSource (Lake City,FL), Lake City, FL - 32055, 8.530 s Mar 9 2023 MiTek Industries, Inc. Thu Apr 13 14:25:14 2023 Page 1
ID:Ys8zlwKNmTR0LjtaCjYR7AyUufK-XZjfESGG?bKmCHEfC_yN?yjFHmnAjLzMbWZE0EzR63Z

Scale: 3/8"=1'

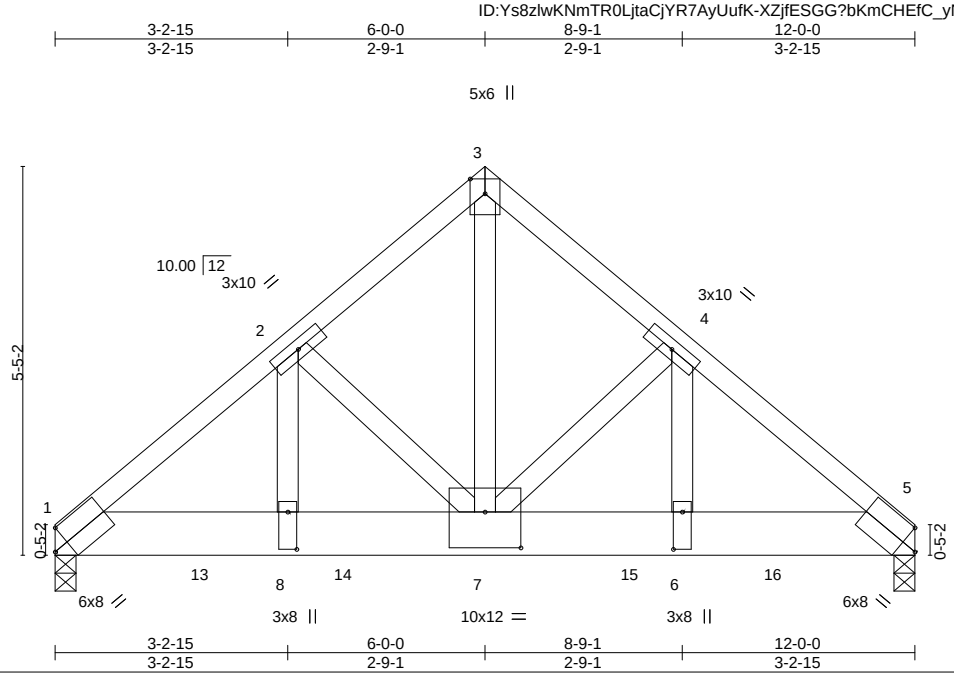

Plate Offsets (X,Y)-- [1:Edge,0-3-2], [5:Edge,0-3-2], [6:0-6-4,0-1-8], [7:0-6-0,0-6-0], [8:0-6-4,0-1-8]

LOADING (psf)		**SPACING-** 2-0-0		**CSI.**		**DEFL.**	in	(loc)	l/defl	L/d	**PLATES**	**GRIP**
TCLL	20.0	Plate Grip DOL	1.25	TC	0.46	Vert(LL)	-0.08	7	>999	240	MT20	244/190
TCDL	7.0	Lumber DOL	1.25	BC	0.42	Vert(CT)	-0.13	7	>999	180		
BCLL	0.0 *	Rep Stress Incr	NO	WB	0.94	Horz(CT)	0.03	5	n/a	n/a		
BCDL	10.0	Code FBC2020/TPI2014		Matrix-MS							Weight: 84 lb	FT = 20%

LUMBER-
TOP CHORD 2x4 SP No.2
BOT CHORD 2x8 SP 2400F 2.0E
WEBS 2x4 SP No.3 *Except*
3-7: 2x4 SP No.2

BRACING-
TOP CHORD Structural wood sheathing directly applied or 2-5-9 oc purlins.
BOT CHORD Rigid ceiling directly applied or 10-0-0 oc bracing.

REACTIONS. (size) 1=0-3-8 (req. 0-4-3), 5=0-3-8 (req. 0-4-4)
Max Horz 1=110(LC 24)
Max Uplift 1=-673(LC 8), 5=-683(LC 9)
Max Grav 1=3531(LC 2), 5=3584(LC 2)

FORCES. (lb) - Max. Comp./Max. Ten. - All forces 250 (lb) or less except when shown.
TOP CHORD 1-2=-4710/905, 2-3=-3395/698, 3-4=-3396/699, 4-5=-4707/906
BOT CHORD 1-8=-710/3596, 7-8=-710/3596, 6-7=-659/3595, 5-6=-659/3595
WEBS 3-7=-822/4155, 4-7=-1386/348, 4-6=-308/1696, 2-7=-1387/348, 2-8=-309/1700

NOTES-
1) Unbalanced roof live loads have been considered for this design.
2) Wind: ASCE 7-16; Vult=130mph (3-second gust) Vasd=101mph; TCDL=4.2psf; BCDL=3.0psf; h=20ft; Cat. II; Exp B; Encl., GCpi=0.18; MWFRS (envelope) gable end zone; Lumber DOL=1.60 plate grip DOL=1.60
3) Building Designer / Project engineer responsible for verifying applied roof live load shown covers rain loading requirements specific to the use of this truss component.
4) This truss has been designed for a 10.0 psf bottom chord live load nonconcurrent with any other live loads.
5) * This truss has been designed for a live load of 20.0psf on the bottom chord in all areas where a rectangle 3-6-0 tall by 2-0-0 wide will fit between the bottom chord and any other members.
6) WARNING: Required bearing size at joint(s) 1, 5 greater than input bearing size.
7) Provide mechanical connection (by others) of truss to bearing plate capable of withstanding 100 lb uplift at joint(s) except (jt=lb) 1=673, 5=683.
8) Hanger(s) or other connection device(s) shall be provided sufficient to support concentrated load(s) 1269 lb down and 252 lb up at 2-0-12, 1269 lb down and 252 lb up at 4-0-12, 1269 lb down and 252 lb up at 6-0-12, and 1269 lb down and 252 lb up at 8-0-12, and 1269 lb down and 252 lb up at 10-0-12 on bottom chord. The design/selection of such connection device(s) is the responsibility of others.
9) In the LOAD CASE(S) section, loads applied to the face of the truss are noted as front (F) or back (B).

LOAD CASE(S) Standard
1) Dead + Roof Live (balanced): Lumber Increase=1.25, Plate Increase=1.25
Uniform Loads (plf)
Vert: 1-3=-54, 3-5=-54, 1-5=-20
Concentrated Loads (lb)
Vert: 7=-1089(F) 13=-1089(F) 14=-1089(F) 15=-1089(F) 16=-1089(F)

This item has been electronically signed and sealed by ORegan, Philip, PE using a Digital Signature. Printed copies of this document are not considered signed and sealed and the signature must be verified on any electronic copies.

Philip J. O'Regan PE No.58126
MiTek Inc. DBA MiTek USA FL Cert 6634
16023 Swingley Ridge Rd. Chesterfield, MO 63017
Date:

April 14,2023

WARNING - Verify design parameters and READ NOTES ON THIS AND INCLUDED MITEK REFERENCE PAGE MII-7473 rev. 5/19/2020 BEFORE USE.
Design valid for use only with MiTek® connectors. This design is based only upon parameters shown, and is for an individual building component, not a truss system. Before use, the building designer must verify the applicability of design parameters and properly incorporate this design into the overall building design. Bracing indicated is to prevent buckling of individual truss web and/or chord members only. Additional temporary and permanent bracing is always required for stability and to prevent collapse with possible personal injury and property damage. For general guidance regarding the fabrication, storage, delivery, erection and bracing of trusses and truss systems, see ***ANSI/TPI1 Quality Criteria, DSB-89 and BCSI Building Component Safety Information*** available from Truss Plate Institute, 2670 Crain Highway, Suite 203 Waldorf, MD 20601

MiTek
16023 Swingley Ridge Rd
Chesterfield, MO 63017

Job	Truss	Truss Type	Qty	Ply	CJ CONST. - CADY RES.
3371626	T12	Monopitch	14	1	T30317761
					Job Reference (optional)

Builders FirstSource (Lake City,FL), Lake City, FL - 32055, 8.530 s Mar 9 2023 MiTek Industries, Inc. Thu Apr 13 14:25:16 2023 Page 1
ID:Ys8zlwKNmTR0LjtaCjYR7AyUufK-UyqQe8IWXDaURbO2KP?r4NoauaOCBP6f3q2L57zR63X

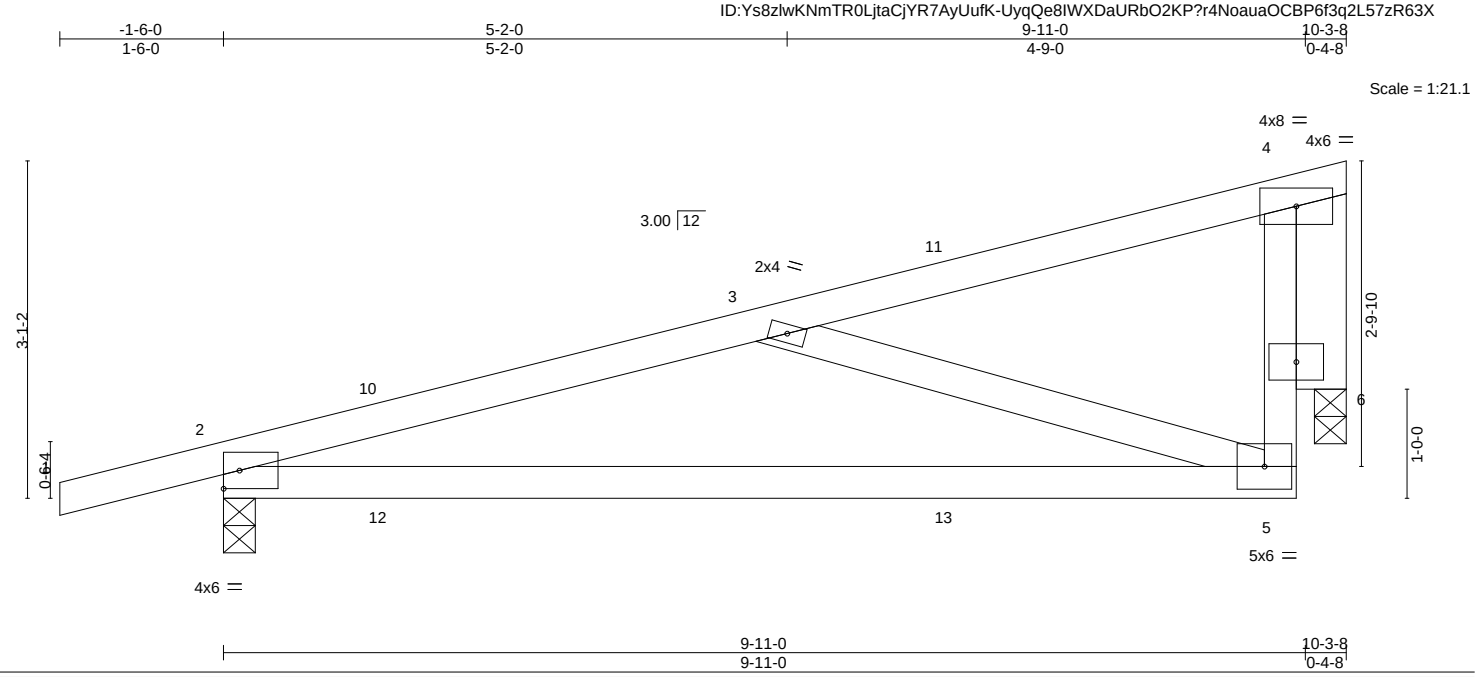

LOADING (psf)		SPACING-	2-0-0	CSI.		DEFL.	in	(loc)	l/defl	L/d	PLATES	GRIP
TCLL	20.0	Plate Grip DOL	1.25	TC	0.51	Vert(LL)	0.44	5-9	>264	240	MT20	244/190
TCDL	7.0	Lumber DOL	1.25	BC	0.76	Vert(CT)	-0.42	5-9	>279	180		
BCLL	0.0 *	Rep Stress Incr	YES	WB	0.26	Horz(CT)	-0.02	2	n/a	n/a		
BCDL	10.0	Code FBC2020/TPI2014		Matrix-MS							Weight: 48 lb	FT = 20%

LUMBER-
TOP CHORD 2x4 SP No.2
BOT CHORD 2x4 SP No.2 *Except*
4-5: 2x4 SP No.3
WEBS 2x4 SP No.3
OTHERS 2x6 SP No.2

BRACING-
TOP CHORD Structural wood sheathing directly applied or 6-0-0 oc purlins.
BOT CHORD Rigid ceiling directly applied or 4-1-8 oc bracing.

REACTIONS. (size) 2=0-3-8, 6=0-3-8
Max Horz 2=144(LC 8)
Max Uplift 2=-219(LC 8), 6=-190(LC 8)
Max Grav 2=446(LC 1), 6=352(LC 1)

FORCES. (lb) - Max. Comp./Max. Ten. - All forces 250 (lb) or less except when shown.
TOP CHORD 2-3=-624/547
BOT CHORD 5-6=-414/262, 2-5=-703/588
WEBS 3-5=-562/601

NOTES-
1) Wind: ASCE 7-16; Vult=130mph (3-second gust) Vasd=101mph; TCDL=4.2psf; BCDL=3.0psf; h=20ft; Cat. II; Exp B; Encl., GCpi=0.18; MWFRS (envelope) gable end zone and C-C Exterior(2E) -1-6-0 to 1-6-0, Interior(1) 1-6-0 to 9-8-4 zone; porch left exposed;C-C for members and forces & MWFRS for reactions shown; Lumber DOL=1.60 plate grip DOL=1.60
2) Building Designer / Project engineer responsible for verifying applied roof live load shown covers rain loading requirements specific to the use of this truss component.
3) This truss has been designed for a 10.0 psf bottom chord live load nonconcurrent with any other live loads.
4) * This truss has been designed for a live load of 20.0psf on the bottom chord in all areas where a rectangle 3-6-0 tall by 2-0-0 wide will fit between the bottom chord and any other members.
5) Bearing at joint(s) 6 considers parallel to grain value using ANSI/TPI 1 angle to grain formula. Building designer should verify capacity of bearing surface.
6) Provide mechanical connection (by others) of truss to bearing plate capable of withstanding 100 lb uplift at joint(s) except (jt=lb) 2=219, 6=190.

This item has been electronically signed and sealed by ORegan, Philip, PE using a Digital Signature. Printed copies of this document are not considered signed and sealed and the signature must be verified on any electronic copies.

Philip J. O'Regan PE No.58126
MiTek Inc. DBA MiTek USA FL Cert 6634
16023 Swingley Ridge Rd. Chesterfield, MO 63017
Date:

April 14,2023

WARNING - Verify design parameters and READ NOTES ON THIS AND INCLUDED MITEK REFERENCE PAGE MII-7473 rev. 5/19/2020 BEFORE USE.
Design valid for use only with MiTek® connectors. This design is based only upon parameters shown, and is for an individual building component, not a truss system. Before use, the building designer must verify the applicability of design parameters and properly incorporate this design into the overall building design. Bracing indicated is to prevent buckling of individual truss web and/or chord members only. Additional temporary and permanent bracing is always required for stability and to prevent collapse with possible personal injury and property damage. For general guidance regarding the fabrication, storage, delivery, erection and bracing of trusses and truss systems, see ***ANSI/TPI1 Quality Criteria, DSB-89 and BCSI Building Component Safety Information*** available from Truss Plate Institute, 2670 Crain Highway, Suite 203 Waldorf, MD 20601

MiTek
16023 Swingley Ridge Rd
Chesterfield, MO 63017

Job	Truss	Truss Type	Qty	Ply	CJ CONST. - CADY RES.
3371626	T13	Piggyback Base	5	1	T30317762 Job Reference (optional)

Builders FirstSource (Lake City,FL), Lake City, FL - 32055, 8.530 s Mar 9 2023 MiTek Industries, Inc. Thu Apr 13 14:25:18 2023 Page 1
ID:Ys8zlwKNmTR0LjtaCjYR7AyUufK-QLyA3qJn3qqChuXQRq1J9ouu0O1rfGzyW8XS9?zR63V

6-7-13	13-0-1	17-8-1	22-4-1	26-2-1	30-3-8	31-10-0
6-7-13	6-4-5	4-8-0	4-8-0	3-9-15	4-1-7	1-6-8

Scale = 1:68.2

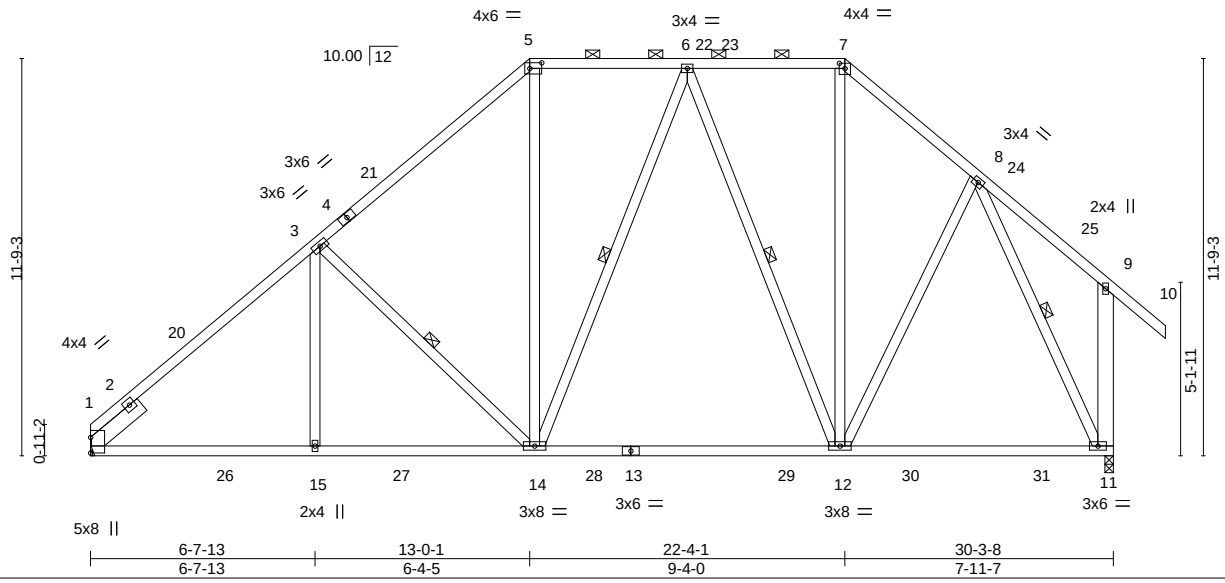

6-7-13	13-0-1	22-4-1	30-3-8
6-7-13	6-4-5	9-4-0	7-11-7

Plate Offsets (X,Y)-- [5:0-4-4,0-2-0], [7:0-2-0,0-1-13]

LOADING (psf)		SPACING- 2-0-0		CSI.		DEFL.	in	(loc)	l/defl	L/d	PLATES	GRIP
TCLL	20.0	Plate Grip DOL	1.25	TC	0.60	Vert(LL)	-0.25	12-14	>999	240	MT20	244/190
TCDL	7.0	Lumber DOL	1.25	BC	0.95	Vert(CT)	-0.39	12-14	>933	180		
BCLL	0.0 *	Rep Stress Incr	YES	WB	0.50	Horz(CT)	0.04	11	n/a	n/a		
BCDL	10.0	Code FBC2020/TPI2014		Matrix-MS							Weight: 235 lb	FT = 20%

LUMBER-

TOP CHORD 2x4 SP No.2
BOT CHORD 2x4 SP No.2
WEBS 2x4 SP No.3 *Except*
6-14,6-12: 2x4 SP No.2, 9-11: 2x6 SP No.2
SLIDER Left 2x6 SP No.2 1-11-8

BRACING-

TOP CHORD Structural wood sheathing directly applied or 3-6-12 oc purlins, except end verticals, and 2-0-0 oc purlins (6-0-0 max.): 5-7.
BOT CHORD Rigid ceiling directly applied or 10-0-0 oc bracing, Except: 2-2-0 oc bracing: 12-14.
WEBS 1 Row at midpt 3-14, 6-14, 6-12, 8-11

REACTIONS. (size) 1=Mechanical, 11=0-3-0
Max Horz 1=316(LC 11)
Max Uplift 1=-232(LC 12), 11=-242(LC 13)
Max Grav 1=1289(LC 2), 11=1386(LC 2)

FORCES. (lb) - Max. Comp./Max. Ten. - All forces 250 (lb) or less except when shown.
TOP CHORD 1-3=-1560/304, 3-5=-1215/320, 5-6=-865/314, 6-7=-689/258, 7-8=-950/281, 9-11=-277/164
BOT CHORD 1-15=-301/1265, 14-15=-301/1265, 12-14=-203/830, 11-12=-112/517
WEBS 3-15=0/282, 3-14=-483/259, 5-14=-94/486, 6-12=-403/184, 7-12=-123/403, 8-12=-107/406, 8-11=-1164/162

NOTES-

1) Unbalanced roof live loads have been considered for this design.
2) Wind: ASCE 7-16; Vult=130mph (3-second gust) Vasd=101mph; TCDL=4.2psf; BCDL=3.0psf; h=20ft; Cat. II; Exp B; Encl., GCpi=0.18; MWFRS (envelope) gable end zone and C-C Exterior(2E) 0-0-0 to 3-0-6, Interior(1) 3-0-6 to 13-0-1, Exterior(2R) 13-0-1 to 17-3-8, Interior(1) 17-3-8 to 22-4-1, Exterior(2R) 22-4-1 to 26-7-8, Interior(1) 26-7-8 to 31-10-0 zone; end vertical right exposed;C-C for members and forces & MWFRS for reactions shown; Lumber DOL=1.60 plate grip DOL=1.60
3) Building Designer / Project engineer responsible for verifying applied roof live load shown covers rain loading requirements specific to the use of this truss component.
4) Provide adequate drainage to prevent water ponding.
5) This truss has been designed for a 10.0 psf bottom chord live load nonconcurrent with any other live loads.
6) * This truss has been designed for a live load of 20.0psf on the bottom chord in all areas where a rectangle 3-6-0 tall by 2-0-0 wide will fit between the bottom chord and any other members, with BCDL = 10.0psf.
7) Refer to girder(s) for truss to truss connections.
8) Provide mechanical connection (by others) of truss to bearing plate capable of withstanding 100 lb uplift at joint(s) except (jt=lb) 1=232, 11=242.
9) Graphical purlin representation does not depict the size or the orientation of the purlin along the top and/or bottom chord.

This item has been electronically signed and sealed by ORegan, Philip, PE using a Digital Signature. Printed copies of this document are not considered signed and sealed and the signature must be verified on any electronic copies.

Philip J. O'Regan PE No.58126
MiTek Inc. DBA MiTek USA FL Cert 6634
16023 Swingley Ridge Rd. Chesterfield, MO 63017
Date:

April 14,2023

WARNING - Verify design parameters and READ NOTES ON THIS AND INCLUDED MITEK REFERENCE PAGE MII-7473 rev. 5/19/2020 BEFORE USE.
Design valid for use only with MiTek® connectors. This design is based only upon parameters shown, and is for an individual building component, not a truss system. Before use, the building designer must verify the applicability of design parameters and properly incorporate this design into the overall building design. Bracing indicated is to prevent buckling of individual truss web and/or chord members only. Additional temporary and permanent bracing is always required for stability and to prevent collapse with possible personal injury and property damage. For general guidance regarding the fabrication, storage, delivery, erection and bracing of trusses and truss systems, see ***ANSI/TPI1 Quality Criteria, DSB-89 and BCSI Building Component Safety Information*** available from Truss Plate Institute, 2670 Crain Highway, Suite 203 Waldorf, MD 20601

MiTek
16023 Swingley Ridge Rd
Chesterfield, MO 63017

Job	Truss	Truss Type	Qty	Ply	CJ CONST. - CADY RES.
3371626	T13G	GABLE	1	1	T30317763 Job Reference (optional)

Builders FirstSource (Lake City,FL), Lake City, FL - 32055, 8.530 s Mar 9 2023 MiTek Industries, Inc. Thu Apr 13 14:25:22 2023 Page 1
ID:Ys8zlwKNmTR0LjtaCjYR7AyUufK-I6ChvBNH73Kd9WrCgg5FJe2br?XWb1nXRmVfInzR63R

Scale = 1:73.5

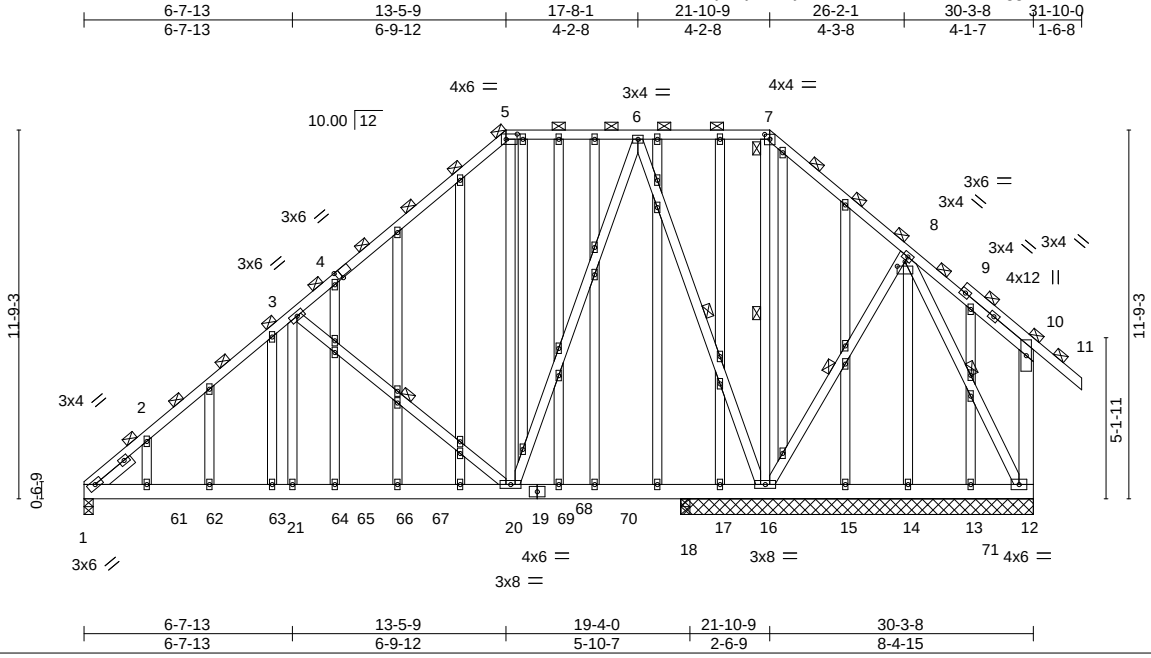

Plate Offsets (X,Y)-- [4:0-1-12,Edge], [5:0-4-4,0-2-0], [7:0-2-0,0-1-14], [8:0-3-0,0-1-12]

LOADING (psf)		SPACING- 2-0-0		CSI.		DEFL.	in	(loc)	l/defl	L/d	PLATES	GRIP
TCLL	20.0	Plate Grip DOL	1.25	TC	0.55	Vert(LL)	-0.04	20-21	>999	240	MT20	244/190
TCDL	7.0	Lumber DOL	1.25	BC	0.32	Vert(CT)	-0.07	20-21	>999	180		
BCLL	0.0 *	Rep Stress Incr	NO	WB	0.64	Horz(CT)	0.01	16	n/a	n/a		
BCDL	10.0	Code FBC2020/TPI2014		Matrix-MS							Weight: 436 lb	FT = 20%

LUMBER-

TOP CHORD	2x4 SP No.2
BOT CHORD	2x6 SP No.2
WEBS	2x4 SP No.3 *Except* 10-12: 2x6 SP No.2
OTHERS	2x4 SP No.3
SLIDER	Left 2x4 SP No.3 1-5-5

BRACING-

TOP CHORD	2-0-0 oc purlins (5-3-6 max.), except end verticals.
BOT CHORD	Rigid ceiling directly applied or 6-0-0 oc bracing.
WEBS	1 Row at midpt 3-20, 6-16, 7-16, 8-16, 8-12

REACTIONS. All bearings 11-3-0 except (jt=length) 1=0-3-8, 18=0-3-8.
(lb) - Max Horz 1=313(LC 26)
Max Uplift All uplift 100 lb or less at joint(s) 13, 18 except 1=-254(LC 8), 16=-371(LC 9), 12=-108(LC 28), 17=-182(LC 21)
Max Grav All reactions 250 lb or less at joint(s) 13, 14, 15, 17 except 1=908(LC 21), 16=1241(LC 2), 12=266(LC 20), 18=382(LC 21)

FORCES. (lb) - Max. Comp./Max. Ten. - All forces 250 (lb) or less except when shown.

TOP CHORD	1-3=-1077/329, 3-5=-592/259, 5-6=-369/273
BOT CHORD	1-21=-343/920, 20-21=-343/920
WEBS	3-21=-68/368, 3-20=-620/335, 6-20=-228/660, 6-16=-789/294, 7-16=-281/64

NOTES-

1) Unbalanced roof live loads have been considered for this design.
2) Wind: ASCE 7-16; Vult=130mph (3-second gust) Vasd=101mph; TCDL=4.2psf; BCDL=3.0psf; h=20ft; Cat. II; Exp B; Encl., GCpi=0.18; MWFRS (envelope) gable end zone; end vertical right exposed; Lumber DOL=1.60 plate grip DOL=1.60
3) Truss designed for wind loads in the plane of the truss only. For studs exposed to wind (normal to the face), see Standard Industry Gable End Details as applicable, or consult qualified building designer as per ANSI/TPI 1.
4) Building Designer / Project engineer responsible for verifying applied roof live load shown covers rain loading requirements specific to the use of this truss component.
5) Provide adequate drainage to prevent water ponding.
6) All plates are 2x4 MT20 unless otherwise indicated.
7) Gable studs spaced at 2-0-0 oc.
8) This truss has been designed for a 10.0 psf bottom chord live load nonconcurrent with any other live loads.
9) * This truss has been designed for a live load of 20.0psf on the bottom chord in all areas where a rectangle 3-6-0 tall by 2-0-0 wide will fit between the bottom chord and any other members, with BCDL = 10.0psf.
10) Provide mechanical connection (by others) of truss to bearing plate capable of withstanding 100 lb uplift at joint(s) 13, 18 except (jt=lb) 1=254, 16=371, 12=108, 17=182.
11) Graphical purlin representation does not depict the size or the orientation of the purlin along the top and/or bottom chord.
12) Hanger(s) or other connection device(s) shall be provided sufficient to support concentrated load(s) 24 lb down and 23 lb up at 2-0-12, 24 lb down and 23 lb up at 4-0-12, 24 lb down and 23 lb up at 6-0-12, 24 lb down and 23 lb up at 8-0-12, 24 lb down and 23 lb up at 9-3-4, 24 lb down and 23 lb up at 11-3-4, 24 lb down and 23 lb up at 13-3-4, and 24 lb down and 23 lb up at 15-3-4, and 24 lb down and 23 lb up at 17-3-4 on bottom chord. The design/selection of such connection device(s) is the responsibility of

Continued on page 2

This item has been electronically signed and sealed by ORegan, Philip, PE using a Digital Signature. Printed copies of this document are not considered signed and sealed and the signature must be verified on any electronic copies.

Philip J. O'Regan PE No.58126
MiTek Inc. DBA MiTek USA FL Cert 6634
16023 Swingley Ridge Rd. Chesterfield, MO 63017
Date:

April 14,2023

WARNING - Verify design parameters and READ NOTES ON THIS AND INCLUDED MITEK REFERENCE PAGE MII-7473 rev. 5/19/2020 BEFORE USE.
Design valid for use only with MiTek® connectors. This design is based only upon parameters shown, and is for an individual building component, not a truss system. Before use, the building designer must verify the applicability of design parameters and properly incorporate this design into the overall building design. Bracing indicated is to prevent buckling of individual truss web and/or chord members only. Additional temporary and permanent bracing is always required for stability and to prevent collapse with possible personal injury and property damage. For general guidance regarding the fabrication, storage, delivery, erection and bracing of trusses and truss systems, see ***ANSI/TPI1 Quality Criteria, DSB-89 and BCSI Building Component Safety Information*** available from Truss Plate Institute, 2670 Crain Highway, Suite 203 Waldorf, MD 20601

MiTek
16023 Swingley Ridge Rd
Chesterfield, MO 63017

NOTES-

13) In the LOAD CASE(S) section, loads applied to the face of the truss are noted as front (F) or back (B).

LOAD CASE(S) Standard

1) Dead + Roof Live (balanced): Lumber Increase=1.25, Plate Increase=1.25
   Uniform Loads (plf)
   Vert: 5-58=-54, 5-7=-54, 7-10=-54, 10-11=-54, 1-12=-20
   Concentrated Loads (lb)
   Vert: 61=-24(F) 62=-24(F) 63=-24(F) 64=-24(F) 66=-24(F) 67=-24(F) 68=-24(F) 69=-24(F) 70=-24(F)

WARNING - Verify design parameters and READ NOTES ON THIS AND INCLUDED MITEK REFERENCE PAGE MII-7473 rev. 5/19/2020 BEFORE USE.
Design valid for use only with MiTek® connectors. This design is based only upon parameters shown, and is for an individual building component, not a truss system. Before use, the building designer must verify the applicability of design parameters and properly incorporate this design into the overall building design. Bracing indicated is to prevent buckling of individual truss web and/or chord members only. Additional temporary and permanent bracing is always required for stability and to prevent collapse with possible personal injury and property damage. For general guidance regarding the fabrication, storage, delivery, erection and bracing of trusses and truss systems, see ***ANSI/TPI1 Quality Criteria, DSB-89 and BCSI Building Component Safety Information*** available from Truss Plate Institute, 2670 Crain Highway, Suite 203 Waldorf, MD 20601

MiTek
16023 Swingley Ridge Rd
Chesterfield, MO 63017

Job	Truss	Truss Type	Qty	Ply	CJ CONST. - CADY RES.
3371626	T14	Piggyback Base	1	1	T30317764 Job Reference (optional)

Builders FirstSource (Lake City,FL), Lake City, FL - 32055, 8.530 s Mar 9 2023 MiTek Industries, Inc. Thu Apr 13 14:25:24 2023 Page 1
ID:Ys8zlwKNmTR0LjtaCjYR7AyUufK-FVJRKtOXegaLPp?ao48jP37?do503w0qu4_mNfzR63P

3-7-1	8-3-9	13-0-1	17-8-1	22-4-1	26-2-1	30-3-8	31-10-0
3-7-1	4-8-8	4-8-8	4-8-0	4-8-0	3-9-15	4-1-7	1-6-8

Scale = 1:62.5

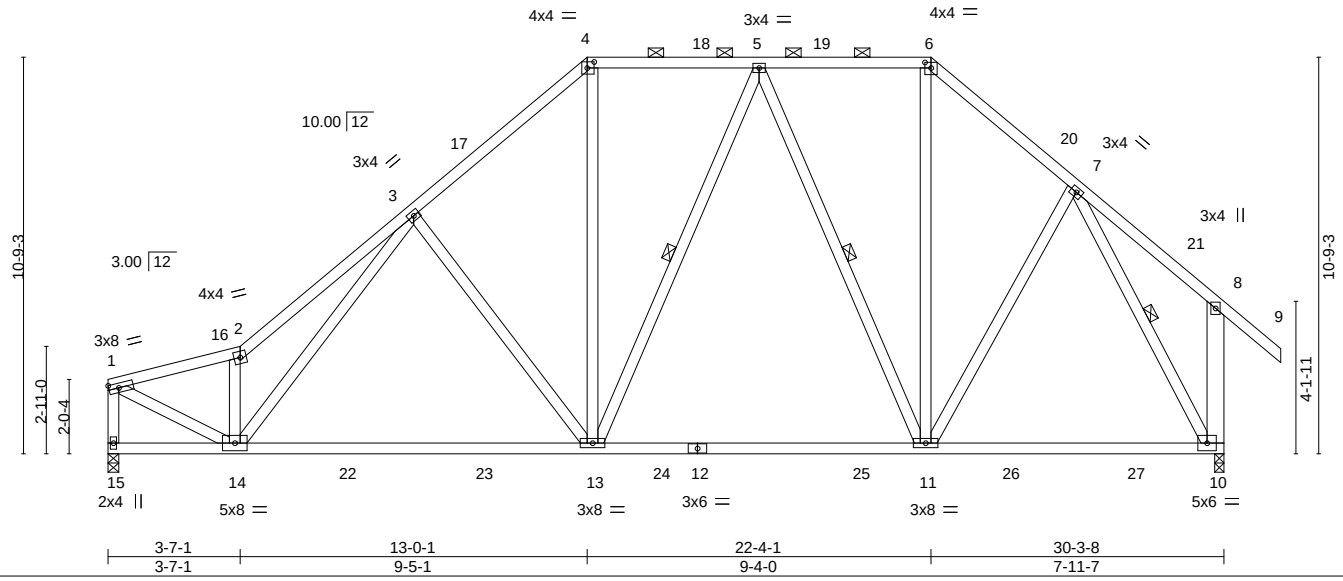

3-7-1	13-0-1	22-4-1	30-3-8
3-7-1	9-5-1	9-4-0	7-11-7

Plate Offsets (X,Y)-- [4:0-2-4,0-2-0], [6:0-2-0,0-1-13]

LOADING (psf)		SPACING- 2-0-0		CSI.		DEFL.	in	(loc)	l/defl	L/d	PLATES	GRIP
TCLL	20.0	Plate Grip DOL	1.25	TC	0.27	Vert(LL)	-0.25	13-14	>999	240	MT20	244/190
TCDL	7.0	Lumber DOL	1.25	BC	0.83	Vert(CT)	-0.43	13-14	>827	180		
BCLL	0.0 *	Rep Stress Incr	YES	WB	0.65	Horz(CT)	0.04	10	n/a	n/a		
BCDL	10.0	Code FBC2020/TPI2014		Matrix-MS							Weight: 231 lb	FT = 20%

LUMBER-
TOP CHORD 2x4 SP No.2
BOT CHORD 2x4 SP No.2 *Except*
12-15: 2x4 SP No.1
WEBS 2x4 SP No.3 *Except*
8-10: 2x6 SP No.2

BRACING-
TOP CHORD Structural wood sheathing directly applied or 3-10-5 oc purlins, except end verticals, and 2-0-0 oc purlins (5-11-4 max.): 4-6.
BOT CHORD Rigid ceiling directly applied or 10-0-0 oc bracing, Except: 6-0-0 oc bracing: 14-15.
WEBS 1 Row at midpt 5-13, 5-11, 7-10

REACTIONS. (size) 15=0-3-8, 10=0-3-0
Max Horz 15=273(LC 11)
Max Uplift 15=-203(LC 12), 10=-195(LC 13)
Max Grav 15=1260(LC 2), 10=1369(LC 2)

FORCES. (lb) - Max. Comp./Max. Ten. - All forces 250 (lb) or less except when shown.
TOP CHORD 1-2=-1594/363, 2-3=-2098/582, 3-4=-1293/449, 4-5=-939/393, 5-6=-741/361, 6-7=-1017/399, 1-15=-1271/301, 8-10=-273/209
BOT CHORD 14-15=-272/197, 13-14=-323/1222, 11-13=-195/889, 10-11=-141/579
WEBS 2-14=-1082/370, 3-14=-177/726, 3-13=-436/255, 4-13=-163/602, 5-11=-413/174, 6-11=-141/444, 7-11=-95/370, 1-14=-363/1714, 7-10=-1166/246

NOTES-
1) Unbalanced roof live loads have been considered for this design.
2) Wind: ASCE 7-16; Vult=130mph (3-second gust) Vasd=101mph; TCDL=4.2psf; BCDL=3.0psf; h=20ft; Cat. II; Exp B; Encl., GCpi=0.18; MWFRS (envelope) gable end zone and C-C Exterior(2E) 0-1-12 to 3-2-2, Interior(1) 3-2-2 to 13-0-1, Exterior(2R) 13-0-1 to 16-0-7, Interior(1) 16-0-7 to 22-4-1, Exterior(2R) 22-4-1 to 25-4-7, Interior(1) 25-4-7 to 31-10-0 zone; end vertical right exposed;C-C for members and forces & MWFRS for reactions shown; Lumber DOL=1.60 plate grip DOL=1.60
3) Building Designer / Project engineer responsible for verifying applied roof live load shown covers rain loading requirements specific to the use of this truss component.
4) Provide adequate drainage to prevent water ponding.
5) This truss has been designed for a 10.0 psf bottom chord live load nonconcurrent with any other live loads.
6) * This truss has been designed for a live load of 20.0psf on the bottom chord in all areas where a rectangle 3-6-0 tall by 2-0-0 wide will fit between the bottom chord and any other members, with BCDL = 10.0psf.
7) Provide mechanical connection (by others) of truss to bearing plate capable of withstanding 100 lb uplift at joint(s) except (jt=lb) 15=203, 10=195.
8) Graphical purlin representation does not depict the size or the orientation of the purlin along the top and/or bottom chord.

This item has been electronically signed and sealed by ORegan, Philip, PE using a Digital Signature. Printed copies of this document are not considered signed and sealed and the signature must be verified on any electronic copies.

Philip J. O'Regan PE No.58126
MiTek Inc. DBA MiTek USA FL Cert 6634
16023 Swingley Ridge Rd. Chesterfield, MO 63017
Date:

April 14,2023

WARNING - Verify design parameters and READ NOTES ON THIS AND INCLUDED MITEK REFERENCE PAGE MII-7473 rev. 5/19/2020 BEFORE USE.
Design valid for use only with MiTek® connectors. This design is based only upon parameters shown, and is for an individual building component, not a truss system. Before use, the building designer must verify the applicability of design parameters and properly incorporate this design into the overall building design. Bracing indicated is to prevent buckling of individual truss web and/or chord members only. Additional temporary and permanent bracing is always required for stability and to prevent collapse with possible personal injury and property damage. For general guidance regarding the fabrication, storage, delivery, erection and bracing of trusses and truss systems, see ***ANSI/TPI1 Quality Criteria, DSB-89 and BCSI Building Component Safety Information*** available from Truss Plate Institute, 2670 Crain Highway, Suite 203 Waldorf, MD 20601

MiTek
16023 Swingley Ridge Rd
Chesterfield, MO 63017

Job	Truss	Truss Type	Qty	Ply	CJ CONST. - CADY RES.
3371626	T14G	GABLE	1	1	T30317765 Job Reference (optional)

Builders FirstSource (Lake City,FL), Lake City, FL - 32055, 8.530 s Mar 9 2023 MiTek Industries, Inc. Thu Apr 13 14:25:26 2023 Page 1
ID:Ys8zlwKNmTR0LjtaCjYR7AyUufK-BtRClZQoAHq3e78zvVABUUDLbcnrXqT7MOTtRYzR63N

3-7-1	8-3-9	13-0-1	17-8-1	21-10-9	26-2-1	30-3-8	31-10-0
3-7-1	4-8-8	4-8-8	4-8-0	4-2-8	4-3-8	4-1-7	1-6-8

Scale = 1:66.9

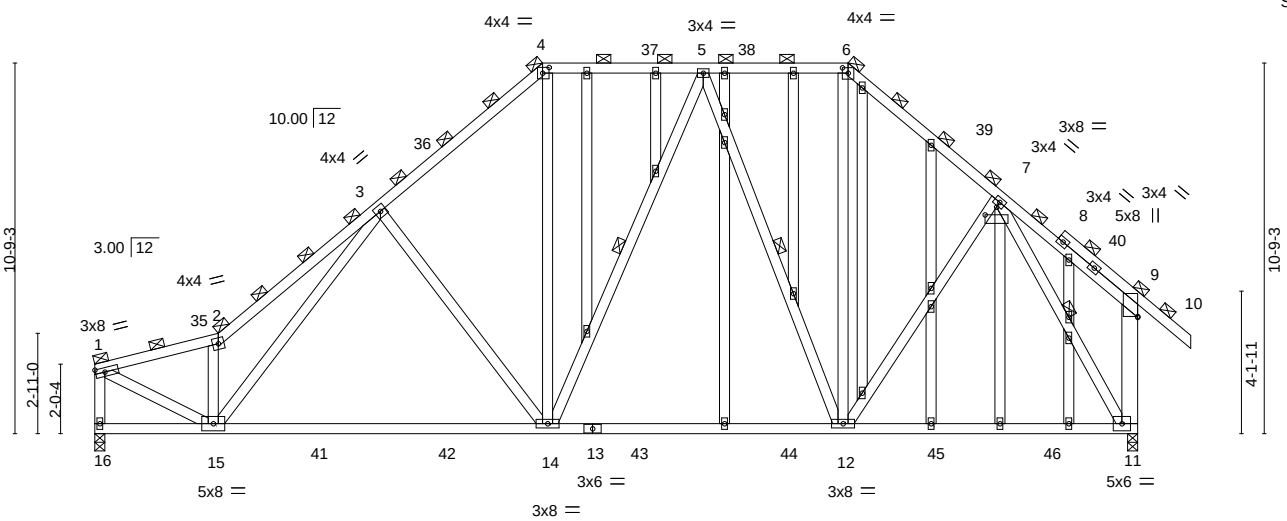

3-7-1	13-0-1	21-10-9	30-3-8
3-7-1	9-5-1	8-10-8	8-4-15

Plate Offsets (X,Y)-- [4:0-2-4,0-2-0], [6:0-2-0,0-1-14], [7:0-4-0,0-2-11]

LOADING (psf)		SPACING- 2-0-0		CSI.		DEFL.	in	(loc)	l/defl	L/d	PLATES	GRIP
TCLL	20.0	Plate Grip DOL	1.25	TC	0.31	Vert(LL)	-0.26	14-15	>999	240	MT20	244/190
TCDL	7.0	Lumber DOL	1.25	BC	0.81	Vert(CT)	-0.46	14-15	>788	180		
BCLL	0.0 *	Rep Stress Incr	YES	WB	0.65	Horz(CT)	0.04	11	n/a	n/a		
BCDL	10.0	Code FBC2020/TPI2014		Matrix-MS							Weight: 318 lb	FT = 20%

LUMBER-

TOP CHORD	2x4 SP No.2
BOT CHORD	2x4 SP No.2 *Except* 13-16: 2x4 SP No.1
WEBS	2x4 SP No.3 *Except* 9-11: 2x6 SP No.2
OTHERS	2x4 SP No.3

BRACING-

TOP CHORD	2-0-0 oc purlins (3-10-4 max.), except end verticals.
BOT CHORD	Rigid ceiling directly applied or 10-0-0 oc bracing, Except: 6-0-0 oc bracing: 15-16.
WEBS	1 Row at midpt 5-14, 5-12, 7-11

REACTIONS. (size) 16=0-3-8, 11=0-3-8
Max Horz 16=270(LC 11)
Max Uplift 16=-203(LC 12), 11=-199(LC 13)
Max Grav 16=1259(LC 2), 11=1366(LC 2)

FORCES. (lb) - Max. Comp./Max. Ten. - All forces 250 (lb) or less except when shown.

TOP CHORD	1-2=-1596/362, 2-3=-2100/581, 3-4=-1288/449, 4-5=-935/392, 5-6=-765/365, 6-7=-1055/398, 1-16=-1273/300, 9-11=-286/194
BOT CHORD	15-16=-269/195, 14-15=-324/1219, 12-14=-187/889, 11-12=-157/605
WEBS	2-15=-1083/370, 3-15=-176/734, 3-14=-437/255, 4-14=-161/595, 5-12=-393/173, 6-12=-136/466, 7-12=-90/333, 1-15=-362/1717, 7-11=-1139/262

NOTES-

1) Unbalanced roof live loads have been considered for this design.
2) Wind: ASCE 7-16; Vult=130mph (3-second gust) Vasd=101mph; TCDL=4.2psf; BCDL=3.0psf; h=20ft; Cat. II; Exp B; Encl., GCpi=0.18; MWFRS (envelope) gable end zone and C-C Exterior(2E) 0-1-12 to 3-2-2, Interior(1) 3-2-2 to 13-0-1, Exterior(2R) 13-0-1 to 16-0-7, Interior(1) 16-0-7 to 21-10-9, Exterior(2R) 21-10-9 to 24-10-15, Interior(1) 24-10-15 to 31-10-0 zone; end vertical right exposed;C-C for members and forces & MWFRS for reactions shown; Lumber DOL=1.60 plate grip DOL=1.60
3) Truss designed for wind loads in the plane of the truss only. For studs exposed to wind (normal to the face), see Standard Industry Gable End Details as applicable, or consult qualified building designer as per ANSI/TPI 1.
4) Building Designer / Project engineer responsible for verifying applied roof live load shown covers rain loading requirements specific to the use of this truss component.
5) Provide adequate drainage to prevent water ponding.
6) All plates are 2x4 MT20 unless otherwise indicated.
7) Gable studs spaced at 2-0-0 oc.
8) This truss has been designed for a 10.0 psf bottom chord live load nonconcurrent with any other live loads.
9) * This truss has been designed for a live load of 20.0psf on the bottom chord in all areas where a rectangle 3-6-0 tall by 2-0-0 wide will fit between the bottom chord and any other members, with BCDL = 10.0psf.
10) Provide mechanical connection (by others) of truss to bearing plate capable of withstanding 100 lb uplift at joint(s) except (jt=lb) 16=203, 11=199.
11) Graphical purlin representation does not depict the size or the orientation of the purlin along the top and/or bottom chord.

This item has been electronically signed and sealed by ORegan, Philip, PE using a Digital Signature. Printed copies of this document are not considered signed and sealed and the signature must be verified on any electronic copies.

Philip J. O'Regan PE No.58126
MiTek Inc. DBA MiTek USA FL Cert 6634
16023 Swingley Ridge Rd. Chesterfield, MO 63017
Date:

April 14,2023

WARNING - Verify design parameters and READ NOTES ON THIS AND INCLUDED MITEK REFERENCE PAGE MII-7473 rev. 5/19/2020 BEFORE USE.
Design valid for use only with MiTek® connectors. This design is based only upon parameters shown, and is for an individual building component, not a truss system. Before use, the building designer must verify the applicability of design parameters and properly incorporate this design into the overall building design. Bracing indicated is to prevent buckling of individual truss web and/or chord members only. Additional temporary and permanent bracing is always required for stability and to prevent collapse with possible personal injury and property damage. For general guidance regarding the fabrication, storage, delivery, erection and bracing of trusses and truss systems, see ***ANSI/TPI1 Quality Criteria, DSB-89 and BCSI Building Component Safety Information*** available from Truss Plate Institute, 2670 Crain Highway, Suite 203 Waldorf, MD 20601

MiTek
16023 Swingley Ridge Rd
Chesterfield, MO 63017

Job	Truss	Truss Type	Qty	Ply	CJ CONST. - CADY RES.
3371626	T15	PIGGYBACK BASE	6	1	T30317766 Job Reference (optional)

Builders FirstSource, Lake City, FL 32055

8.530 s May 26 2022 MiTek Industries, Inc. Fri Apr 14 16:20:53 2023 Page 1

ID:Ys8zlwKNmTR0LjtaCjYR7AyUufK-fWHvc?e4BrFgHJcXYKkV6GqXg60FtghN2fdtJczQvq8

3-7-1	9-5-12	13-0-1	18-8-0	22-4-1	26-2-1	30-3-8	31-10-0
3-7-1	5-10-11	3-6-5	5-7-15	3-8-1	3-9-15	4-1-7	1-6-8

Scale = 1:65.2

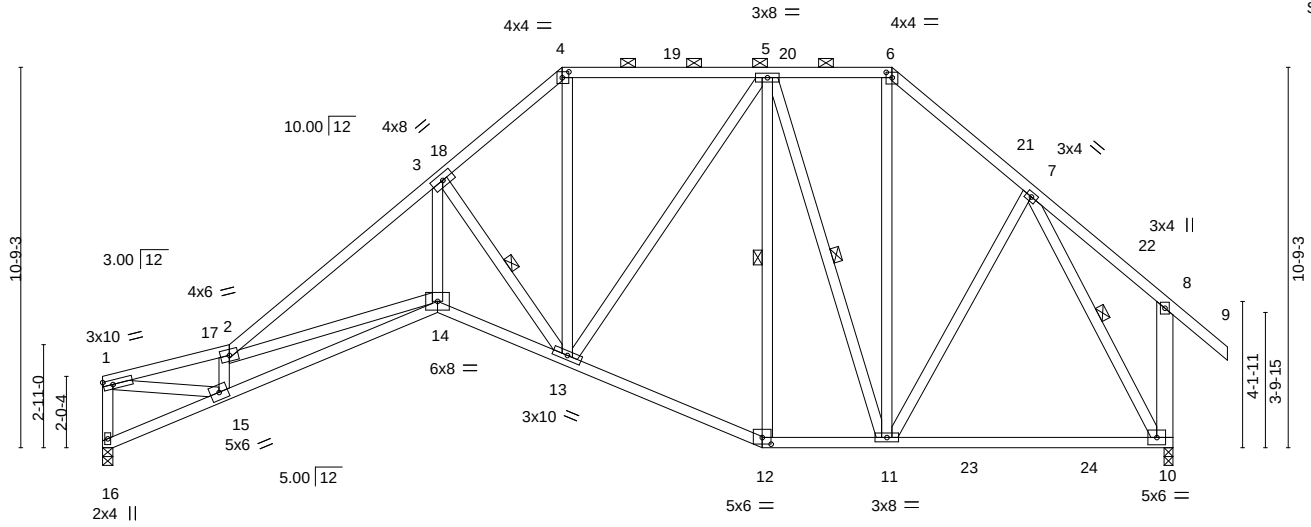

3-7-1	9-5-12	13-0-1	18-8-0	22-4-1	30-3-8
3-7-1	5-10-11	3-6-5	5-7-15	3-8-1	7-11-7

Plate Offsets (X,Y)-- [4:0-2-4,0-2-0], [6:0-2-0,0-1-13], [12:0-3-0,0-2-4]

LOADING (psf)		SPACING- 2-0-0		CSI.		DEFL. in (loc) l/defl L/d		PLATES	GRIP
TCLL	20.0	Plate Grip DOL	1.25	TC	0.93	Vert(LL) -0.24 14-15 >999 240		MT20	244/190
TCDL	7.0	Lumber DOL	1.25	BC	1.00	Vert(CT) -0.44 14-15 >823 180			
BCLL	0.0 *	Rep Stress Incr	YES	WB	0.80	Horz(CT) 0.29 10 n/a n/a			
BCDL	10.0	Code FBC2020/TPI2014		Matrix-MS				Weight: 240 lb	FT = 20%

LUMBER-

TOP CHORD 2x4 SP No.2
BOT CHORD 2x4 SP No.2
WEBS 2x4 SP No.3 *Except*
1-15: 2x4 SP No.2, 8-10: 2x6 SP No.2

BRACING-

TOP CHORD Structural wood sheathing directly applied, except end verticals, and 2-0-0 oc purlins (5-1-15 max.): 4-6.
BOT CHORD Rigid ceiling directly applied.
WEBS 1 Row at midpt 3-13, 5-12, 5-11, 7-10

REACTIONS. (size) 16=0-3-8, 10=0-3-0
Max Horz 16=273(LC 11)
Max Uplift 16=-203(LC 12), 10=-195(LC 13)
Max Grav 16=1186(LC 2), 10=1306(LC 2)

FORCES. (lb) - Max. Comp./Max. Ten. - All forces 250 (lb) or less except when shown.
TOP CHORD 1-16=-1142/310, 1-17=-2897/762, 2-17=-2865/763, 2-3=-2814/752, 3-18=-1466/489, 4-18=-1452/506, 4-19=-1087/429, 5-19=-1087/429, 5-20=-685/357, 6-20=-685/357, 6-21=-888/396, 7-21=-946/377, 8-10=-277/214
BOT CHORD 15-16=-297/226, 14-15=-923/3368, 13-14=-583/2459, 12-13=-204/919, 11-12=-184/812, 11-23=-120/541, 23-24=-120/541, 10-24=-120/541
WEBS 1-15=-722/2783, 2-15=-1426/466, 2-14=-844/329, 3-14=-487/2203, 3-13=-1976/599, 4-13=-216/728, 5-13=-147/578, 5-12=-252/95, 5-11=-481/186, 6-11=-162/441, 7-11=-93/332, 7-10=-1076/234

NOTES-

1) Unbalanced roof live loads have been considered for this design.
2) Wind: ASCE 7-16; Vult=130mph (3-second gust) Vasd=101mph; TCDL=4.2psf; BCDL=3.0psf; h=20ft; Cat. II; Exp B; Encl., GCpi=0.18; MWFRS (envelope) gable end zone and C-C Exterior(2E) 0-1-12 to 3-2-2, Interior(1) 3-2-2 to 13-0-1, Exterior(2R) 13-0-1 to 16-0-7, Interior(1) 16-0-7 to 22-4-1, Exterior(2R) 22-4-1 to 25-4-7, Interior(1) 25-4-7 to 31-10-0 zone; end vertical right exposed;C-C for members and forces & MWFRS for reactions shown; Lumber DOL=1.60 plate grip DOL=1.60
3) Building Designer / Project engineer responsible for verifying applied roof live load shown covers rain loading requirements specific to the use of this truss component.
4) Provide adequate drainage to prevent water ponding.
5) This truss has been designed for a 10.0 psf bottom chord live load nonconcurrent with any other live loads.
6) * This truss has been designed for a live load of 20.0psf on the bottom chord in all areas where a rectangle 3-6-0 tall by 2-0-0 wide will fit between the bottom chord and any other members, with BCDL = 10.0psf.
7) Bearing at joint(s) 16 considers parallel to grain value using ANSI/TPI 1 angle to grain formula. Building designer should verify capacity of bearing surface.
8) Provide mechanical connection (by others) of truss to bearing plate capable of withstanding 203 lb uplift at joint 16 and 195 lb uplift at joint 10.
9) Graphical purlin representation does not depict the size or the orientation of the purlin along the top and/or bottom chord.

This item has been electronically signed and sealed by ORegan, Philip, PE using a Digital Signature. Printed copies of this document are not considered signed and sealed and the signature must be verified on any electronic copies.

Philip J. O'Regan PE No.58126
MiTek Inc. DBA MiTek USA FL Cert 6634
16023 Swingley Ridge Rd. Chesterfield, MO 63017
Date:

April 14,2023

WARNING - Verify design parameters and READ NOTES ON THIS AND INCLUDED MITEK REFERENCE PAGE MII-7473 rev. 5/19/2020 BEFORE USE.
Design valid for use only with MiTek® connectors. This design is based only upon parameters shown, and is for an individual building component, not a truss system. Before use, the building designer must verify the applicability of design parameters and properly incorporate this design into the overall building design. Bracing indicated is to prevent buckling of individual truss web and/or chord members only. Additional temporary and permanent bracing is always required for stability and to prevent collapse with possible personal injury and property damage. For general guidance regarding the fabrication, storage, delivery, erection and bracing of trusses and truss systems, see ***ANSI/TPI1 Quality Criteria, DSB-89 and BCSI Building Component Safety Information*** available from Truss Plate Institute, 2670 Crain Highway, Suite 203 Waldorf, MD 20601

MiTek
16023 Swingley Ridge Rd
Chesterfield, MO 63017

Job	Truss	Truss Type	Qty	Ply	CJ CONST. - CADY RES.
3371626	T16	Piggyback Base	3	1	T30317767 Job Reference (optional)

Builders FirstSource (Lake City,FL), Lake City, FL - 32055, 8.530 s Mar 9 2023 MiTek Industries, Inc. Thu Apr 13 14:25:30 2023 Page 1
ID:Ys8zlwKNmTR0LjtaCjYR7AyUufK-3ehibwTIEWLV7kSk8LF7eKNt0D6tTcJjH?R5aJzR63J

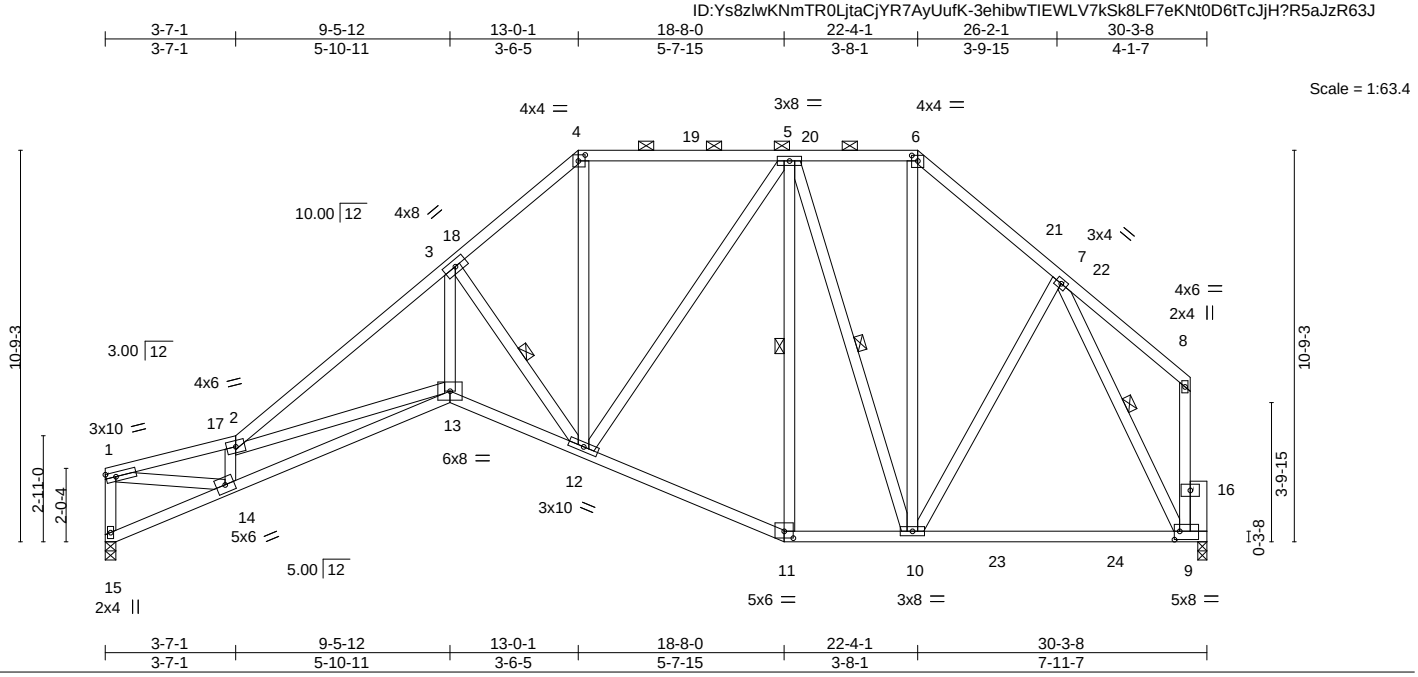

Plate Offsets (X,Y)-- [4:0-2-4,0-2-0], [6:0-2-0,0-1-13], [9:0-1-12,0-2-12], [11:0-3-0,0-2-4]

LOADING (psf)		**SPACING-** 2-0-0		**CSI.**		**DEFL.**	in	(loc)	l/defl	L/d	**PLATES**	**GRIP**
TCLL	20.0	Plate Grip DOL	1.25	TC	0.92	Vert(LL)	-0.24	13-14	>999	240	MT20	244/190
TCDL	7.0	Lumber DOL	1.25	BC	0.99	Vert(CT)	-0.43	13-14	>824	180		
BCLL	0.0 *	Rep Stress Incr	YES	WB	0.79	Horz(CT)	0.28	9	n/a	n/a		
BCDL	10.0	Code FBC2020/TPI2014		Matrix-MS							Weight: 236 lb	FT = 20%

LUMBER-
TOP CHORD 2x4 SP No.2
BOT CHORD 2x4 SP No.2
WEBS 2x4 SP No.3 *Except*
1-14,8-9: 2x4 SP No.2
OTHERS 2x6 SP No.2

BRACING-
TOP CHORD Structural wood sheathing directly applied, except end verticals, and 2-0-0 oc purlins (5-2-5 max.): 4-6.
BOT CHORD Rigid ceiling directly applied or 1-4-12 oc bracing.
WEBS 1 Row at midpt 3-12, 5-11, 5-10, 7-9

REACTIONS. (size) 15=0-3-8, 9=0-3-0
Max Horz 15=266(LC 11)
Max Uplift 15=-200(LC 12), 9=-154(LC 13)
Max Grav 15=1179(LC 2), 9=1209(LC 2)

FORCES. (lb) - Max. Comp./Max. Ten. - All forces 250 (lb) or less except when shown.
TOP CHORD 1-15=-1135/349, 1-2=-2878/868, 2-3=-2791/885, 3-4=-1451/528, 4-5=-1075/446, 5-6=-668/350, 6-7=-926/387
BOT CHORD 14-15=-289/202, 13-14=-1179/3315, 12-13=-833/2408, 11-12=-270/905, 10-11=-245/799, 9-10=-205/517
WEBS 1-14=-824/2765, 2-14=-1416/526, 2-13=-843/330, 3-13=-680/2163, 3-12=-1945/748, 4-12=-230/718, 5-12=-163/571, 5-10=-489/189, 6-10=-157/429, 7-10=-100/333, 7-9=-1069/349

NOTES-
1) Unbalanced roof live loads have been considered for this design.
2) Wind: ASCE 7-16; Vult=130mph (3-second gust) Vasd=101mph; TCDL=4.2psf; BCDL=3.0psf; h=20ft; Cat. II; Exp B; Encl., GCpi=0.18; MWFRS (envelope) gable end zone and C-C Exterior(2E) 0-1-12 to 3-2-2, Interior(1) 3-2-2 to 13-0-1, Exterior(2R) 13-0-1 to 16-0-7, Interior(1) 16-0-7 to 22-4-1, Exterior(2R) 22-4-1 to 25-4-7, Interior(1) 25-4-7 to 29-8-4 zone; end vertical right exposed;C-C for members and forces & MWFRS for reactions shown; Lumber DOL=1.60 plate grip DOL=1.60
3) Building Designer / Project engineer responsible for verifying applied roof live load shown covers rain loading requirements specific to the use of this truss component.
4) Provide adequate drainage to prevent water ponding.
5) This truss has been designed for a 10.0 psf bottom chord live load nonconcurrent with any other live loads.
6) * This truss has been designed for a live load of 20.0psf on the bottom chord in all areas where a rectangle 3-6-0 tall by 2-0-0 wide will fit between the bottom chord and any other members, with BCDL = 10.0psf.
7) Bearing at joint(s) 15 considers parallel to grain value using ANSI/TPI 1 angle to grain formula. Building designer should verify capacity of bearing surface.
8) Provide mechanical connection (by others) of truss to bearing plate capable of withstanding 100 lb uplift at joint(s) except (jt=lb) 15=200, 9=154.
9) Graphical purlin representation does not depict the size or the orientation of the purlin along the top and/or bottom chord.

This item has been electronically signed and sealed by ORegan, Philip, PE using a Digital Signature. Printed copies of this document are not considered signed and sealed and the signature must be verified on any electronic copies.

Philip J. O'Regan PE No.58126
MiTek Inc. DBA MiTek USA FL Cert 6634
16023 Swingley Ridge Rd. Chesterfield, MO 63017
Date:

April 14,2023

WARNING - Verify design parameters and READ NOTES ON THIS AND INCLUDED MITEK REFERENCE PAGE MII-7473 rev. 5/19/2020 BEFORE USE.
Design valid for use only with MiTek® connectors. This design is based only upon parameters shown, and is for an individual building component, not a truss system. Before use, the building designer must verify the applicability of design parameters and properly incorporate this design into the overall building design. Bracing indicated is to prevent buckling of individual truss web and/or chord members only. Additional temporary and permanent bracing is always required for stability and to prevent collapse with possible personal injury and property damage. For general guidance regarding the fabrication, storage, delivery, erection and bracing of trusses and truss systems, see ***ANSI/TPI1 Quality Criteria, DSB-89 and BCSI Building Component Safety Information*** available from Truss Plate Institute, 2670 Crain Highway, Suite 203 Waldorf, MD 20601

MiTek
16023 Swingley Ridge Rd
Chesterfield, MO 63017

Job	Truss	Truss Type	Qty	Ply	CJ CONST. - CADY RES.
3371626	T17	Piggyback Base	4	1	T30317768 Job Reference (optional)

Builders FirstSource (Lake City,FL), Lake City, FL - 32055, 8.530 s Mar 9 2023 MiTek Industries, Inc. Thu Apr 13 14:25:31 2023 Page 1
ID:Ys8zlwKNmTR0LjtaCjYR7AyUufK-XrE5oGUw?qTMlu1wi3mMBYwDBdWMC7YsVfAe7lzR63I

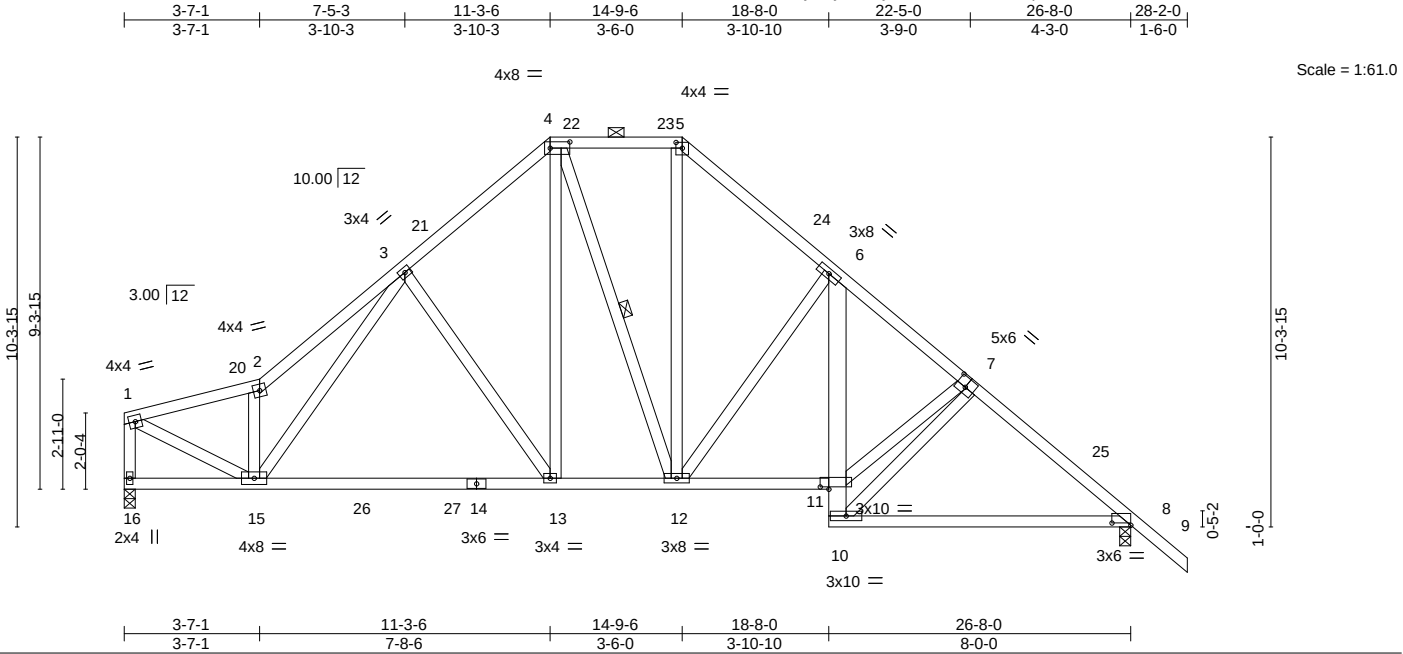

Plate Offsets (X,Y)-- [4:0-6-4,0-2-0], [5:0-2-0,0-1-13], [7:0-3-0,0-3-0], [8:0-6-0,0-0-11], [11:0-2-12,0-0-12]

LOADING (psf)		**SPACING-** 2-0-0		**CSI.**		**DEFL.**	in	(loc)	l/defl	L/d	**PLATES**	**GRIP**
TCLL	20.0	Plate Grip DOL	1.25	TC	0.25	Vert(LL)	-0.16	13-15	>999	240	MT20	244/190
TCDL	7.0	Lumber DOL	1.25	BC	0.66	Vert(CT)	-0.29	13-15	>999	180		
BCLL	0.0 *	Rep Stress Incr	YES	WB	0.54	Horz(CT)	0.06	8	n/a	n/a		
BCDL	10.0	Code FBC2020/TPI2014		Matrix-MS							Weight: 200 lb	FT = 20%

LUMBER-
TOP CHORD 2x4 SP No.2
BOT CHORD 2x4 SP No.2 *Except*
6-10: 2x6 SP No.2
WEBS 2x4 SP No.3

BRACING-
TOP CHORD Structural wood sheathing directly applied or 4-4-9 oc purlins, except end verticals, and 2-0-0 oc purlins (6-0-0 max.): 4-5.
BOT CHORD Rigid ceiling directly applied or 10-0-0 oc bracing.
WEBS 1 Row at midpt 4-12

REACTIONS. (size) 16=0-3-8, 8=0-3-8
Max Horz 16=-237(LC 13)
Max Uplift 16=-177(LC 12), 8=-217(LC 13)
Max Grav 16=1072(LC 2), 8=1146(LC 20)

FORCES. (lb) - Max. Comp./Max. Ten. - All forces 250 (lb) or less except when shown.
TOP CHORD 1-2=-1320/321, 2-3=-1730/509, 3-4=-1083/402, 4-5=-778/358, 5-6=-1071/395, 6-7=-1360/393, 7-8=-1347/374, 1-16=-1062/272
BOT CHORD 13-15=-137/1051, 12-13=-67/844, 11-12=-112/1049, 10-11=-119/820, 6-11=-64/417, 8-10=-178/1013
WEBS 2-15=-900/323, 3-15=-152/602, 3-13=-382/219, 4-13=-141/578, 5-12=-149/503, 6-12=-530/220, 7-11=-65/814, 7-10=-948/191, 1-15=-316/1407

NOTES-
1) Unbalanced roof live loads have been considered for this design.
2) Wind: ASCE 7-16; Vult=130mph (3-second gust) Vasd=101mph; TCDL=4.2psf; BCDL=3.0psf; h=20ft; Cat. II; Exp B; Encl., GCpi=0.18; MWFRS (envelope) gable end zone and C-C Exterior(2E) 0-1-12 to 3-1-12, Interior(1) 3-1-12 to 11-3-6, Exterior(2R) 11-3-6 to 14-3-6, Interior(1) 14-3-6 to 14-9-6, Exterior(2R) 14-9-6 to 17-9-6, Interior(1) 17-9-6 to 28-2-0 zone;C-C for members and forces & MWFRS for reactions shown; Lumber DOL=1.60 plate grip DOL=1.60
3) Building Designer / Project engineer responsible for verifying applied roof live load shown covers rain loading requirements specific to the use of this truss component.
4) Provide adequate drainage to prevent water ponding.
5) This truss has been designed for a 10.0 psf bottom chord live load nonconcurrent with any other live loads.
6) * This truss has been designed for a live load of 20.0psf on the bottom chord in all areas where a rectangle 3-6-0 tall by 2-0-0 wide will fit between the bottom chord and any other members, with BCDL = 10.0psf.
7) Provide mechanical connection (by others) of truss to bearing plate capable of withstanding 100 lb uplift at joint(s) except (jt=lb) 16=177, 8=217.
8) Graphical purlin representation does not depict the size or the orientation of the purlin along the top and/or bottom chord.

This item has been electronically signed and sealed by ORegan, Philip, PE using a Digital Signature. Printed copies of this document are not considered signed and sealed and the signature must be verified on any electronic copies.

Philip J. O'Regan PE No.58126
MiTek Inc. DBA MiTek USA FL Cert 6634
16023 Swingley Ridge Rd. Chesterfield, MO 63017
Date:

April 14,2023

WARNING - Verify design parameters and READ NOTES ON THIS AND INCLUDED MITEK REFERENCE PAGE MII-7473 rev. 5/19/2020 BEFORE USE.
Design valid for use only with MiTek® connectors. This design is based only upon parameters shown, and is for an individual building component, not a truss system. Before use, the building designer must verify the applicability of design parameters and properly incorporate this design into the overall building design. Bracing indicated is to prevent buckling of individual truss web and/or chord members only. Additional temporary and permanent bracing is always required for stability and to prevent collapse with possible personal injury and property damage. For general guidance regarding the fabrication, storage, delivery, erection and bracing of trusses and truss systems, see ***ANSI/TPI1 Quality Criteria, DSB-89 and BCSI Building Component Safety Information*** available from Truss Plate Institute, 2670 Crain Highway, Suite 203 Waldorf, MD 20601

MiTek
16023 Swingley Ridge Rd
Chesterfield, MO 63017

Job	Truss	Truss Type	Qty	Ply	CJ CONST. - CADY RES.
3371626	T18	Monopitch	14	1	T30317769 Job Reference (optional)

Builders FirstSource (Lake City,FL), Lake City, FL - 32055, 8.530 s Mar 9 2023 MiTek Industries, Inc. Thu Apr 13 14:25:32 2023 Page 1
ID:Ys8zlwKNmTR0LjtaCjYR7AyUufK-01oT?cUZm7bDM2c7GmHbjlTIa1twxcs0kJwBfBzR63H

-1-6-0 / 1-6-0 — 8-0-0 / 8-0-0

Scale = 1:18.1

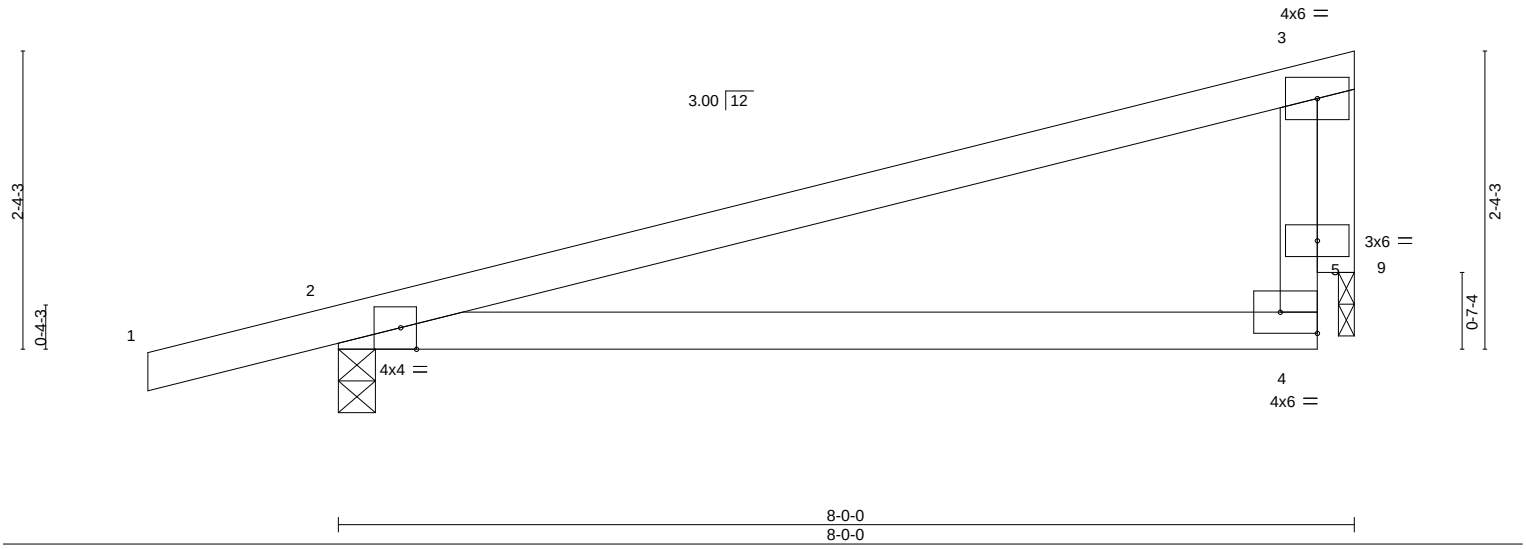

Plate Offsets (X,Y)-- [2:0-1-8,Edge], [4:Edge,0-2-0]

LOADING (psf)		SPACING-	2-0-0	CSI.		DEFL.	in	(loc)	l/defl	L/d	PLATES	GRIP
TCLL	20.0	Plate Grip DOL	1.25	TC	0.60	Vert(LL)	0.29	4-8	>330	240	MT20	244/190
TCDL	7.0	Lumber DOL	1.25	BC	0.64	Vert(CT)	0.25	4-8	>386	180		
BCLL	0.0 *	Rep Stress Incr	YES	WB	0.40	Horz(CT)	-0.01	2	n/a	n/a		
BCDL	10.0	Code FBC2020/TPI2014		Matrix-MR							Weight: 31 lb	FT = 20%

LUMBER-
TOP CHORD 2x4 SP No.2
BOT CHORD 2x4 SP No.2
WEBS 2x4 SP No.3
OTHERS 2x4 SP No.3

BRACING-
TOP CHORD Structural wood sheathing directly applied or 6-0-0 oc purlins, except end verticals.
BOT CHORD Rigid ceiling directly applied or 7-5-13 oc bracing.

REACTIONS. (size) 2=0-3-8, 9=0-1-8
Max Horz 2=82(LC 8)
Max Uplift 2=-198(LC 8), 9=-134(LC 8)
Max Grav 2=382(LC 1), 9=259(LC 1)

FORCES. (lb) - Max. Comp./Max. Ten. - All forces 250 (lb) or less except when shown.
TOP CHORD 2-3=-225/257, 4-5=-255/151, 3-5=-255/151
BOT CHORD 2-4=-303/190
WEBS 3-9=-280/438

NOTES-
1) Wind: ASCE 7-16; Vult=130mph (3-second gust) Vasd=101mph; TCDL=4.2psf; BCDL=3.0psf; h=20ft; Cat. II; Exp B; Encl., GCpi=0.18; MWFRS (envelope) gable end zone and C-C Exterior(2E) -1-6-0 to 1-6-0, Interior(1) 1-6-0 to 7-6-12 zone; porch left and right exposed;C-C for members and forces & MWFRS for reactions shown; Lumber DOL=1.60 plate grip DOL=1.60
2) Building Designer / Project engineer responsible for verifying applied roof live load shown covers rain loading requirements specific to the use of this truss component.
3) This truss has been designed for a 10.0 psf bottom chord live load nonconcurrent with any other live loads.
4) * This truss has been designed for a live load of 20.0psf on the bottom chord in all areas where a rectangle 3-6-0 tall by 2-0-0 wide will fit between the bottom chord and any other members.
5) Bearing at joint(s) 9 considers parallel to grain value using ANSI/TPI 1 angle to grain formula. Building designer should verify capacity of bearing surface.
6) Provide mechanical connection (by others) of truss to bearing plate at joint(s) 9.
7) Provide mechanical connection (by others) of truss to bearing plate capable of withstanding 100 lb uplift at joint(s) except (jt=lb) 2=198, 9=134.

This item has been electronically signed and sealed by ORegan, Philip, PE using a Digital Signature. Printed copies of this document are not considered signed and sealed and the signature must be verified on any electronic copies.

Philip J. O'Regan PE No.58126
MiTek Inc. DBA MiTek USA FL Cert 6634
16023 Swingley Ridge Rd. Chesterfield, MO 63017
Date:

April 14,2023

WARNING - Verify design parameters and READ NOTES ON THIS AND INCLUDED MITEK REFERENCE PAGE MII-7473 rev. 5/19/2020 BEFORE USE.
Design valid for use only with MiTek® connectors. This design is based only upon parameters shown, and is for an individual building component, not a truss system. Before use, the building designer must verify the applicability of design parameters and properly incorporate this design into the overall building design. Bracing indicated is to prevent buckling of individual truss web and/or chord members only. Additional temporary and permanent bracing is always required for stability and to prevent collapse with possible personal injury and property damage. For general guidance regarding the fabrication, storage, delivery, erection and bracing of trusses and truss systems, see ***ANSI/TPI1 Quality Criteria, DSB-89 and BCSI Building Component Safety Information*** available from Truss Plate Institute, 2670 Crain Highway, Suite 203 Waldorf, MD 20601

MiTek
16023 Swingley Ridge Rd
Chesterfield, MO 63017

Job	Truss	Truss Type	Qty	Ply	CJ CONST. - CADY RES.
3371626	T18G	Monopitch Supported Gable	2	1	T30317770 Job Reference (optional)

Builders FirstSource (Lake City,FL), Lake City, FL - 32055, 8.530 s Mar 9 2023 MiTek Industries, Inc. Thu Apr 13 14:25:34 2023 Page 1
ID:Ys8zlwKNmTR0LjtaCjYR7AyUufK-yQwDQIWpIlrwcMmVNBJ3pAYh1qeFPbsIBdPIj4zR63F

-1-6-0 8-0-0
1-6-0 8-0-0

Scale = 1:17.6

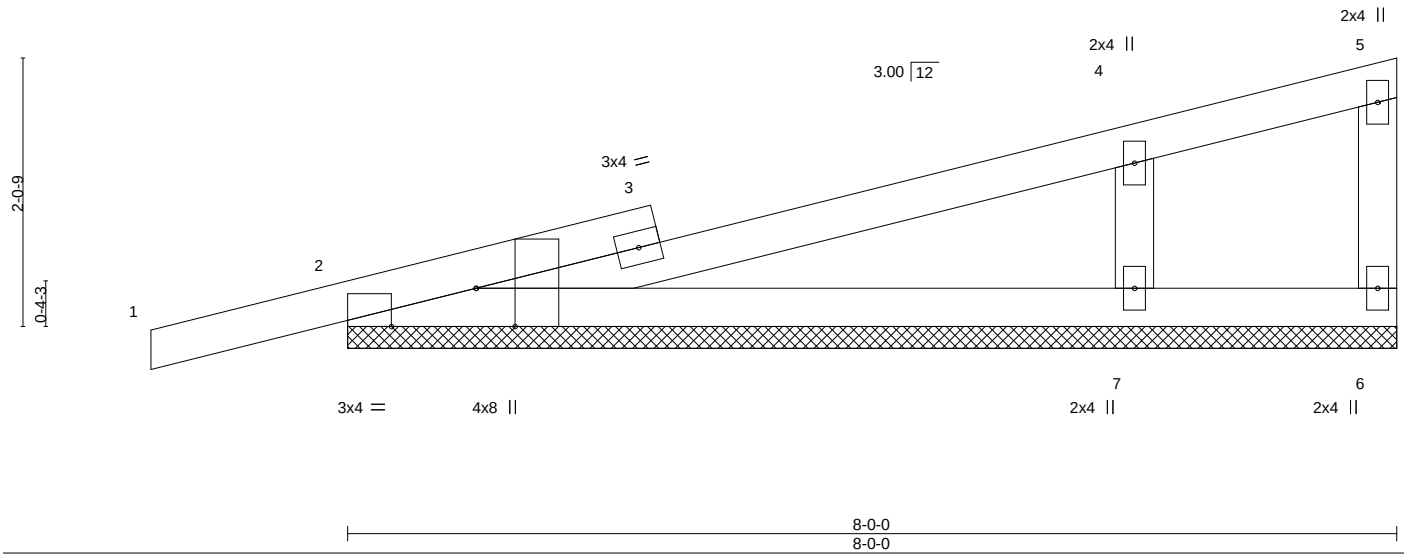

Plate Offsets (X,Y)-- [2:0-3-8,Edge], [2:0-7-12,Edge]

LOADING (psf)		SPACING- 2-0-0		CSI.		DEFL. in (loc) l/defl L/d		PLATES GRIP
TCLL	20.0	Plate Grip DOL	1.25	TC	0.34	Vert(LL) -0.00 1 n/r 120		MT20 244/190
TCDL	7.0	Lumber DOL	1.25	BC	0.26	Vert(CT) 0.01 1 n/r 120		
BCLL	0.0 *	Rep Stress Incr	YES	WB	0.12	Horz(CT) -0.00 6 n/a n/a		
BCDL	10.0	Code FBC2020/TPI2014		Matrix-S				Weight: 32 lb FT = 20%

LUMBER-
TOP CHORD 2x4 SP No.2
BOT CHORD 2x4 SP No.2
WEBS 2x4 SP No.3
OTHERS 2x4 SP No.3

BRACING-
TOP CHORD Structural wood sheathing directly applied or 8-0-0 oc purlins, except end verticals.
BOT CHORD Rigid ceiling directly applied or 6-0-0 oc bracing.

REACTIONS. (size) 2=8-0-0, 6=8-0-0, 7=8-0-0
Max Horz 2=74(LC 8)
Max Uplift 2=-106(LC 8), 6=-71(LC 1), 7=-129(LC 12)
Max Grav 2=270(LC 1), 6=17(LC 12), 7=463(LC 1)

FORCES. (lb) - Max. Comp./Max. Ten. - All forces 250 (lb) or less except when shown.
WEBS 4-7=-321/391

NOTES-
1) Wind: ASCE 7-16; Vult=130mph (3-second gust) Vasd=101mph; TCDL=4.2psf; BCDL=3.0psf; h=20ft; Cat. II; Exp B; Encl., GCpi=0.18; MWFRS (envelope) gable end zone and C-C Corner(3E) -1-6-0 to 1-6-0, Exterior(2N) 1-6-0 to 7-10-4 zone; porch left and right exposed;C-C for members and forces & MWFRS for reactions shown; Lumber DOL=1.60 plate grip DOL=1.60
2) Truss designed for wind loads in the plane of the truss only. For studs exposed to wind (normal to the face), see Standard Industry Gable End Details as applicable, or consult qualified building designer as per ANSI/TPI 1.
3) Building Designer / Project engineer responsible for verifying applied roof live load shown covers rain loading requirements specific to the use of this truss component.
4) Gable requires continuous bottom chord bearing.
5) Gable studs spaced at 2-0-0 oc.
6) This truss has been designed for a 10.0 psf bottom chord live load nonconcurrent with any other live loads.
7) * This truss has been designed for a live load of 20.0psf on the bottom chord in all areas where a rectangle 3-6-0 tall by 2-0-0 wide will fit between the bottom chord and any other members.
8) Provide mechanical connection (by others) of truss to bearing plate capable of withstanding 100 lb uplift at joint(s) 6 except (jt=lb) 2=106, 7=129.

This item has been electronically signed and sealed by ORegan, Philip, PE using a Digital Signature. Printed copies of this document are not considered signed and sealed and the signature must be verified on any electronic copies.

Philip J. O'Regan PE No.58126
MiTek Inc. DBA MiTek USA FL Cert 6634
16023 Swingley Ridge Rd. Chesterfield, MO 63017
Date:

April 14,2023

WARNING - Verify design parameters and READ NOTES ON THIS AND INCLUDED MITEK REFERENCE PAGE MII-7473 rev. 5/19/2020 BEFORE USE.
Design valid for use only with MiTek® connectors. This design is based only upon parameters shown, and is for an individual building component, not a truss system. Before use, the building designer must verify the applicability of design parameters and properly incorporate this design into the overall building design. Bracing indicated is to prevent buckling of individual truss web and/or chord members only. Additional temporary and permanent bracing is always required for stability and to prevent collapse with possible personal injury and property damage. For general guidance regarding the fabrication, storage, delivery, erection and bracing of trusses and truss systems, see ***ANSI/TPI1 Quality Criteria, DSB-89 and BCSI Building Component Safety Information*** available from Truss Plate Institute, 2670 Crain Highway, Suite 203 Waldorf, MD 20601

MiTek
16023 Swingley Ridge Rd
Chesterfield, MO 63017

Job	Truss	Truss Type	Qty	Ply	CJ CONST. - CADY RES.
3371626	TG01	Flat Girder	1	1	T30317771 Job Reference (optional)

Builders FirstSource (Lake City,FL), Lake City, FL - 32055, 8.530 s Mar 9 2023 MiTek Industries, Inc. Thu Apr 13 14:25:35 2023 Page 1
ID:Ys8zlwKNmTR0LjtaCjYR7AyUufK-QcUbeeXR32znDVLixuqILO5wLE0M80?SQH8rGWzR63E

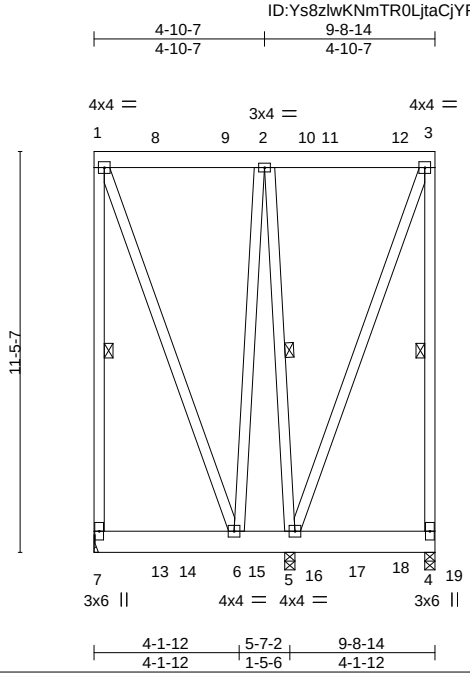

LOADING (psf)		SPACING-	2-0-0	CSI.		DEFL.	in	(loc)	l/defl	L/d	PLATES	GRIP
TCLL	20.0	Plate Grip DOL	1.25	TC	0.11	Vert(LL)	-0.01	6-7	>999	240	MT20	244/190
TCDL	7.0	Lumber DOL	1.25	BC	0.14	Vert(CT)	-0.02	6-7	>999	180		
BCLL	0.0 *	Rep Stress Incr	NO	WB	0.25	Horz(CT)	0.00	4	n/a	n/a		
BCDL	10.0	Code FBC2020/TPI2014		Matrix-MS							Weight: 147 lb	FT = 20%

LUMBER-
TOP CHORD 2x6 SP No.2
BOT CHORD 2x8 SP 2400F 2.0E
WEBS 2x4 SP No.3

BRACING-
TOP CHORD Structural wood sheathing directly applied or 6-0-0 oc purlins, except end verticals.
BOT CHORD Rigid ceiling directly applied or 10-0-0 oc bracing.
WEBS 1 Row at midpt 1-7, 3-4, 2-5

REACTIONS. (size) 7=Mechanical, 4=0-3-8, 5=0-3-8
Max Uplift 7=-304(LC 8), 4=-231(LC 9), 5=-910(LC 4)
Max Grav 7=588(LC 35), 4=440(LC 34), 5=1567(LC 35)

FORCES. (lb) - Max. Comp./Max. Ten. - All forces 250 (lb) or less except when shown.
WEBS 2-6=-114/282, 2-5=-411/276

NOTES-
1) Wind: ASCE 7-16; Vult=130mph (3-second gust) Vasd=101mph; TCDL=4.2psf; BCDL=3.0psf; h=20ft; Cat. II; Exp B; Encl., GCpi=0.18; MWFRS (envelope) gable end zone; Lumber DOL=1.60 plate grip DOL=1.60
2) Building Designer / Project engineer responsible for verifying applied roof live load shown covers rain loading requirements specific to the use of this truss component.
3) Provide adequate drainage to prevent water ponding.
4) This truss has been designed for a 10.0 psf bottom chord live load nonconcurrent with any other live loads.
5) * This truss has been designed for a live load of 20.0psf on the bottom chord in all areas where a rectangle 3-6-0 tall by 2-0-0 wide will fit between the bottom chord and any other members, with BCDL = 10.0psf.
6) Refer to girder(s) for truss to truss connections.
7) Provide mechanical connection (by others) of truss to bearing plate capable of withstanding 100 lb uplift at joint(s) except (jt=lb) 7=304, 4=231, 5=910.
8) Hanger(s) or other connection device(s) shall be provided sufficient to support concentrated load(s) 30 lb down and 57 lb up at 1-9-10, 30 lb down and 57 lb up at 3-9-10, 30 lb down and 57 lb up at 4-8-0, and 30 lb down and 57 lb up at 6-8-0, and 29 lb down and 55 lb up at 8-8-0 on top chord, and 398 lb down and 254 lb up at 1-9-10, 412 lb down and 254 lb up at 3-9-10, 412 lb down and 254 lb up at 4-8-0, and 408 lb down and 254 lb up at 6-8-0, and 398 lb down and 253 lb up at 8-8-0 on bottom chord. The design/selection of such connection device(s) is the responsibility of others.
9) In the LOAD CASE(S) section, loads applied to the face of the truss are noted as front (F) or back (B).

LOAD CASE(S) Standard
1) Dead + Roof Live (balanced): Lumber Increase=1.25, Plate Increase=1.25
Uniform Loads (plf)
Vert: 1-3=-54, 4-7=-20
Concentrated Loads (lb)
Vert: 2=15(F) 8=15(F) 9=15(F) 11=15(F) 12=14(F) 13=-324(F) 15=-324(F) 16=-324(F) 17=-324(F) 19=-325(F)

This item has been electronically signed and sealed by ORegan, Philip, PE using a Digital Signature. Printed copies of this document are not considered signed and sealed and the signature must be verified on any electronic copies.

Philip J. O'Regan PE No.58126
MiTek Inc. DBA MiTek USA FL Cert 6634
16023 Swingley Ridge Rd. Chesterfield, MO 63017
Date:

April 14,2023

WARNING - Verify design parameters and READ NOTES ON THIS AND INCLUDED MITEK REFERENCE PAGE MII-7473 rev. 5/19/2020 BEFORE USE.
Design valid for use only with MiTek® connectors. This design is based only upon parameters shown, and is for an individual building component, not a truss system. Before use, the building designer must verify the applicability of design parameters and properly incorporate this design into the overall building design. Bracing indicated is to prevent buckling of individual truss web and/or chord members only. Additional temporary and permanent bracing is always required for stability and to prevent collapse with possible personal injury and property damage. For general guidance regarding the fabrication, storage, delivery, erection and bracing of trusses and truss systems, see ***ANSI/TPI1 Quality Criteria, DSB-89 and BCSI Building Component Safety Information*** available from Truss Plate Institute, 2670 Crain Highway, Suite 203 Waldorf, MD 20601

MiTek
16023 Swingley Ridge Rd
Chesterfield, MO 63017

Job	Truss	Truss Type	Qty	Ply	CJ CONST. - CADY RES.
3371626	TG02	Flat Girder	1	1	T30317772 Job Reference (optional)

Builders FirstSource (Lake City,FL), Lake City, FL - 32055, 8.530 s Mar 9 2023 MiTek Industries, Inc. Thu Apr 13 14:25:37 2023 Page 1
ID:Ys8zlwKNmTR0LjtaCjYR7AyUufK-M?cM3KYhagDVTpU42JtmQpAE_2jsct2lubdyKPzR63C

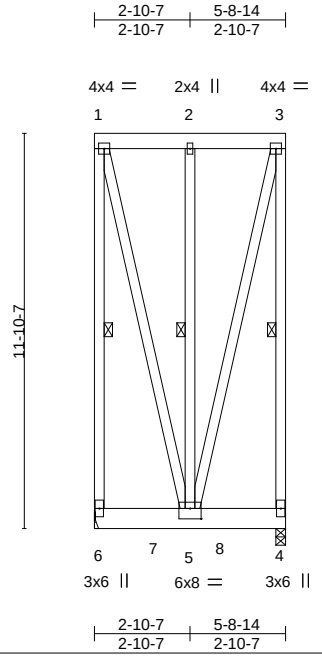

Plate Offsets (X,Y)-- [5:0-4-0,0-3-12]

LOADING (psf)		SPACING- 2-0-0		CSI.		DEFL. in (loc) l/defl L/d		PLATES GRIP
TCLL	20.0	Plate Grip DOL	1.25	TC	0.23	Vert(LL) -0.01 5 >999 240		MT20 244/190
TCDL	7.0	Lumber DOL	1.25	BC	0.08	Vert(CT) -0.01 5 >999 180		
BCLL	0.0 *	Rep Stress Incr	NO	WB	0.41	Horz(CT) -0.00 4 n/a n/a		
BCDL	10.0	Code FBC2020/TPI2014		Matrix-MP				Weight: 112 lb FT = 20%

LUMBER-
TOP CHORD 2x6 SP No.2
BOT CHORD 2x8 SP 2400F 2.0E
WEBS 2x4 SP No.3

BRACING-
TOP CHORD Structural wood sheathing directly applied or 5-8-14 oc purlins, except end verticals.
BOT CHORD Rigid ceiling directly applied or 10-0-0 oc bracing.
WEBS 1 Row at midpt 1-6, 3-4, 2-5

REACTIONS. (size) 6=Mechanical, 4=0-3-8
Max Uplift 6=-299(LC 4), 4=-288(LC 4)
Max Grav 6=579(LC 2), 4=559(LC 2)

FORCES. (lb) - Max. Comp./Max. Ten. - All forces 250 (lb) or less except when shown.
TOP CHORD 1-6=-365/197, 3-4=-365/197
WEBS 1-5=-163/311, 3-5=-163/311

NOTES-
1) Wind: ASCE 7-16; Vult=130mph (3-second gust) Vasd=101mph; TCDL=4.2psf; BCDL=3.0psf; h=20ft; Cat. II; Exp B; Encl., GCpi=0.18; MWFRS (envelope) gable end zone; Lumber DOL=1.60 plate grip DOL=1.60
2) Building Designer / Project engineer responsible for verifying applied roof live load shown covers rain loading requirements specific to the use of this truss component.
3) Provide adequate drainage to prevent water ponding.
4) This truss has been designed for a 10.0 psf bottom chord live load nonconcurrent with any other live loads.
5) * This truss has been designed for a live load of 20.0psf on the bottom chord in all areas where a rectangle 3-6-0 tall by 2-0-0 wide will fit between the bottom chord and any other members.
6) Refer to girder(s) for truss to truss connections.
7) Provide mechanical connection (by others) of truss to bearing plate capable of withstanding 100 lb uplift at joint(s) except (jt=lb) 6=299, 4=288.
8) Hanger(s) or other connection device(s) shall be provided sufficient to support concentrated load(s) 432 lb down and 253 lb up at 1-9-10, and 432 lb down and 253 lb up at 3-9-10 on bottom chord. The design/selection of such connection device(s) is the responsibility of others.
9) In the LOAD CASE(S) section, loads applied to the face of the truss are noted as front (F) or back (B).

LOAD CASE(S) Standard
1) Dead + Roof Live (balanced): Lumber Increase=1.25, Plate Increase=1.25
Uniform Loads (plf)
Vert: 1-3=-54, 4-6=-20
Concentrated Loads (lb)
Vert: 7=-343(B) 8=-343(B)

This item has been electronically signed and sealed by ORegan, Philip, PE using a Digital Signature. Printed copies of this document are not considered signed and sealed and the signature must be verified on any electronic copies.

Philip J. O'Regan PE No.58126
MiTek Inc. DBA MiTek USA FL Cert 6634
16023 Swingley Ridge Rd. Chesterfield, MO 63017
Date:

April 14,2023

WARNING - Verify design parameters and READ NOTES ON THIS AND INCLUDED MITEK REFERENCE PAGE MII-7473 rev. 5/19/2020 BEFORE USE.
Design valid for use only with MiTek® connectors. This design is based only upon parameters shown, and is for an individual building component, not a truss system. Before use, the building designer must verify the applicability of design parameters and properly incorporate this design into the overall building design. Bracing indicated is to prevent buckling of individual truss web and/or chord members only. Additional temporary and permanent bracing is always required for stability and to prevent collapse with possible personal injury and property damage. For general guidance regarding the fabrication, storage, delivery, erection and bracing of trusses and truss systems, see ***ANSI/TPI1 Quality Criteria, DSB-89 and BCSI Building Component Safety Information*** available from Truss Plate Institute, 2670 Crain Highway, Suite 203 Waldorf, MD 20601

MiTek
16023 Swingley Ridge Rd
Chesterfield, MO 63017

Job	Truss	Truss Type	Qty	Ply	CJ CONST. - CADY RES.
3371626	V01	Valley	1	1	T30317773 Job Reference (optional)

Builders FirstSource (Lake City,FL), Lake City, FL - 32055, 8.530 s Mar 9 2023 MiTek Industries, Inc. Thu Apr 13 14:25:38 2023 Page 1
ID:Ys8zlwKNmTR0LjtaCjYR7AyUufK-qB9kGgZJLzLM4z3Gc1O?z0jPZS00LPAu6FNWsrzR63B

9-0-9
9-0-9

Scale = 1:45.7

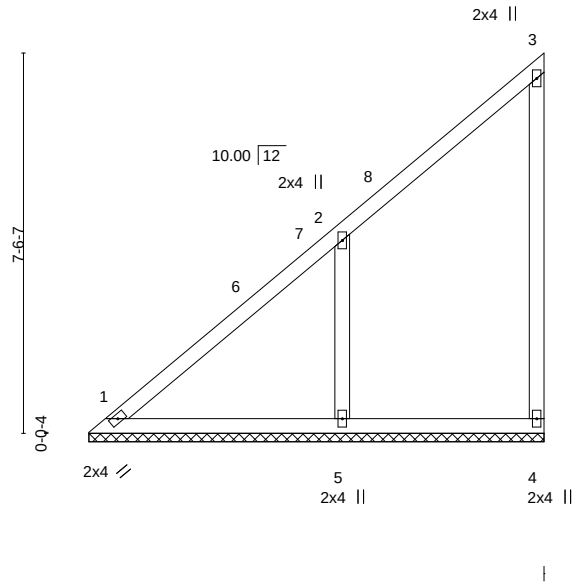

LOADING (psf)		SPACING-	2-0-0	CSI.		DEFL.	in	(loc)	l/defl	L/d	PLATES	GRIP
TCLL	20.0	Plate Grip DOL	1.25	TC	0.24	Vert(LL)	n/a	-	n/a	999	MT20	244/190
TCDL	7.0	Lumber DOL	1.25	BC	0.21	Vert(CT)	n/a	-	n/a	999		
BCLL	0.0 *	Rep Stress Incr	YES	WB	0.10	Horz(CT)	0.00	4	n/a	n/a		
BCDL	10.0	Code FBC2020/TPI2014		Matrix-S							Weight: 46 lb	FT = 20%

LUMBER-
TOP CHORD 2x4 SP No.2
BOT CHORD 2x4 SP No.2
WEBS 2x4 SP No.3
OTHERS 2x4 SP No.3

BRACING-
TOP CHORD Structural wood sheathing directly applied or 6-0-0 oc purlins, except end verticals.
BOT CHORD Rigid ceiling directly applied or 10-0-0 oc bracing.

REACTIONS. (size) 1=9-0-4, 4=9-0-4, 5=9-0-4
Max Horz 1=219(LC 12)
Max Uplift 4=-36(LC 14), 5=-208(LC 12)
Max Grav 1=178(LC 21), 4=156(LC 19), 5=532(LC 19)

FORCES. (lb) - Max. Comp./Max. Ten. - All forces 250 (lb) or less except when shown.
TOP CHORD 1-2=-319/155
WEBS 2-5=-307/321

NOTES-
1) Wind: ASCE 7-16; Vult=130mph (3-second gust) Vasd=101mph; TCDL=4.2psf; BCDL=3.0psf; h=20ft; Cat. II; Exp B; Encl., GCpi=0.18; MWFRS (envelope) gable end zone and C-C Exterior(2E) 0-4-13 to 3-4-13, Interior(1) 3-4-13 to 8-10-13 zone;C-C for members and forces & MWFRS for reactions shown; Lumber DOL=1.60 plate grip DOL=1.60
2) Building Designer / Project engineer responsible for verifying applied roof live load shown covers rain loading requirements specific to the use of this truss component.
3) Gable requires continuous bottom chord bearing.
4) This truss has been designed for a 10.0 psf bottom chord live load nonconcurrent with any other live loads.
5) * This truss has been designed for a live load of 20.0psf on the bottom chord in all areas where a rectangle 3-6-0 tall by 2-0-0 wide will fit between the bottom chord and any other members, with BCDL = 10.0psf.
6) Provide mechanical connection (by others) of truss to bearing plate capable of withstanding 100 lb uplift at joint(s) 4 except (jt=lb) 5=208.

This item has been electronically signed and sealed by ORegan, Philip, PE using a Digital Signature. Printed copies of this document are not considered signed and sealed and the signature must be verified on any electronic copies.

Philip J. O'Regan PE No.58126
MiTek Inc. DBA MiTek USA FL Cert 6634
16023 Swingley Ridge Rd. Chesterfield, MO 63017
Date:

April 14,2023

WARNING - Verify design parameters and READ NOTES ON THIS AND INCLUDED MITEK REFERENCE PAGE MII-7473 rev. 5/19/2020 BEFORE USE.
Design valid for use only with MiTek® connectors. This design is based only upon parameters shown, and is for an individual building component, not a truss system. Before use, the building designer must verify the applicability of design parameters and properly incorporate this design into the overall building design. Bracing indicated is to prevent buckling of individual truss web and/or chord members only. Additional temporary and permanent bracing is always required for stability and to prevent collapse with possible personal injury and property damage. For general guidance regarding the fabrication, storage, delivery, erection and bracing of trusses and truss systems, see ***ANSI/TPI1 Quality Criteria, DSB-89 and BCSI Building Component Safety Information*** available from Truss Plate Institute, 2670 Crain Highway, Suite 203 Waldorf, MD 20601

MiTek
16023 Swingley Ridge Rd
Chesterfield, MO 63017

Job	Truss	Truss Type	Qty	Ply	CJ CONST. - CADY RES.
3371626	V02	Valley	1	1	T30317774
					Job Reference (optional)

Builders FirstSource (Lake City,FL), Lake City, FL - 32055, 8.530 s Mar 9 2023 MiTek Industries, Inc. Thu Apr 13 14:25:39 2023 Page 1
ID:Ys8zlwKNmTR0LjtaCjYR7AyUufK-JNj6T?ay6HTDi7eTAkvEVEFbUrOp4rV2Lv63PHzR63A

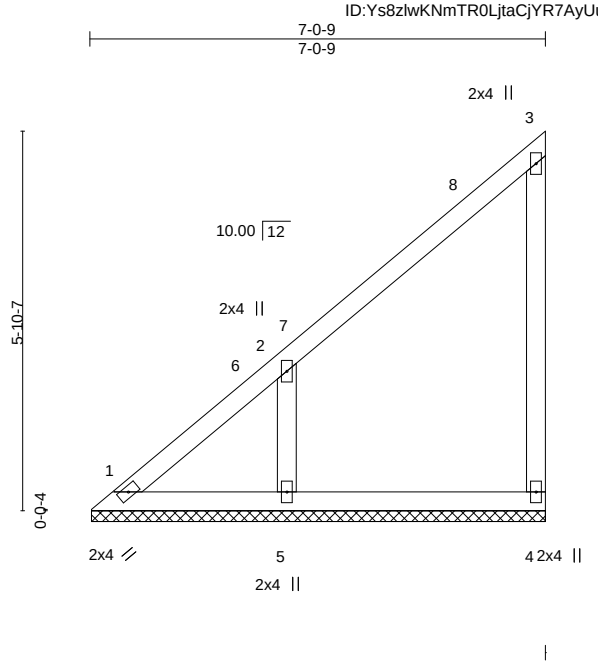

LOADING (psf)		SPACING-	2-0-0	CSI.		DEFL.	in	(loc)	l/defl	L/d	PLATES	GRIP
TCLL	20.0	Plate Grip DOL	1.25	TC	0.17	Vert(LL)	n/a	-	n/a	999	MT20	244/190
TCDL	7.0	Lumber DOL	1.25	BC	0.11	Vert(CT)	n/a	-	n/a	999		
BCLL	0.0 *	Rep Stress Incr	YES	WB	0.09	Horz(CT)	0.00	4	n/a	n/a		
BCDL	10.0	Code FBC2020/TPI2014		Matrix-S							Weight: 34 lb	FT = 20%

LUMBER-
TOP CHORD 2x4 SP No.2
BOT CHORD 2x4 SP No.2
WEBS 2x4 SP No.3
OTHERS 2x4 SP No.3

BRACING-
TOP CHORD Structural wood sheathing directly applied or 6-0-0 oc purlins, except end verticals.
BOT CHORD Rigid ceiling directly applied or 10-0-0 oc bracing.

REACTIONS. (size) 1=7-0-4, 4=7-0-4, 5=7-0-4
Max Horz 1=179(LC 12)
Max Uplift 1=-8(LC 10), 4=-58(LC 12), 5=-173(LC 12)
Max Grav 1=110(LC 12), 4=129(LC 19), 5=320(LC 19)

FORCES. (lb) - Max. Comp./Max. Ten. - All forces 250 (lb) or less except when shown.
TOP CHORD 1-2=-309/138
WEBS 2-5=-238/304

NOTES-
1) Wind: ASCE 7-16; Vult=130mph (3-second gust) Vasd=101mph; TCDL=4.2psf; BCDL=3.0psf; h=20ft; Cat. II; Exp B; Encl., GCpi=0.18; MWFRS (envelope) gable end zone and C-C Exterior(2E) 0-4-13 to 3-4-13, Interior(1) 3-4-13 to 6-10-13 zone;C-C for members and forces & MWFRS for reactions shown; Lumber DOL=1.60 plate grip DOL=1.60
2) Building Designer / Project engineer responsible for verifying applied roof live load shown covers rain loading requirements specific to the use of this truss component.
3) Gable requires continuous bottom chord bearing.
4) This truss has been designed for a 10.0 psf bottom chord live load nonconcurrent with any other live loads.
5) * This truss has been designed for a live load of 20.0psf on the bottom chord in all areas where a rectangle 3-6-0 tall by 2-0-0 wide will fit between the bottom chord and any other members.
6) Provide mechanical connection (by others) of truss to bearing plate capable of withstanding 100 lb uplift at joint(s) 1, 4 except (jt=lb) 5=173.

This item has been electronically signed and sealed by ORegan, Philip, PE using a Digital Signature. Printed copies of this document are not considered signed and sealed and the signature must be verified on any electronic copies.

Philip J. O'Regan PE No.58126
MiTek Inc. DBA MiTek USA FL Cert 6634
16023 Swingley Ridge Rd. Chesterfield, MO 63017
Date:

April 14,2023

WARNING - Verify design parameters and READ NOTES ON THIS AND INCLUDED MITEK REFERENCE PAGE MII-7473 rev. 5/19/2020 BEFORE USE.
Design valid for use only with MiTek® connectors. This design is based only upon parameters shown, and is for an individual building component, not a truss system. Before use, the building designer must verify the applicability of design parameters and properly incorporate this design into the overall building design. Bracing indicated is to prevent buckling of individual truss web and/or chord members only. Additional temporary and permanent bracing is always required for stability and to prevent collapse with possible personal injury and property damage. For general guidance regarding the fabrication, storage, delivery, erection and bracing of trusses and truss systems, see ***ANSI/TPI1 Quality Criteria, DSB-89 and BCSI Building Component Safety Information*** available from Truss Plate Institute, 2670 Crain Highway, Suite 203 Waldorf, MD 20601

MiTek
16023 Swingley Ridge Rd
Chesterfield, MO 63017

Job	Truss	Truss Type	Qty	Ply	CJ CONST. - CADY RES.
3371626	V03	Valley	1	1	T30317775
					Job Reference (optional)

Builders FirstSource (Lake City,FL), Lake City, FL - 32055, 8.530 s Mar 9 2023 MiTek Industries, Inc. Thu Apr 13 14:25:40 2023 Page 1
ID:Ys8zlwKNmTR0LjtaCjYR7AyUufK-naHUhLbatbb4KHDfkRQT2RoitFiupJ9BaZscxkzR639

5-0-9
5-0-9

Scale = 1:25.6

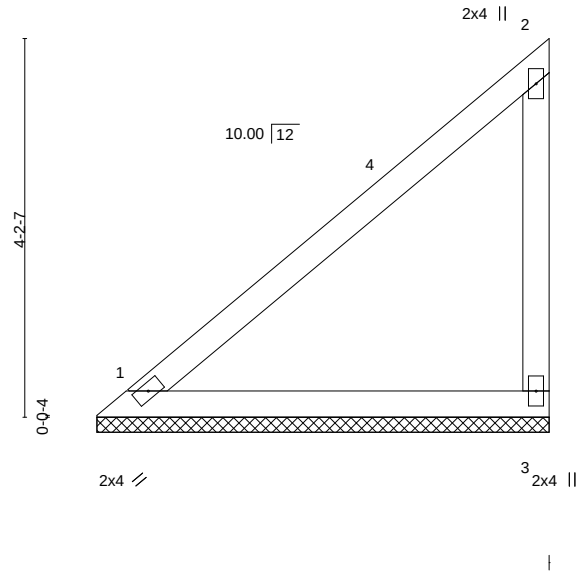

LOADING (psf)		SPACING- 2-0-0		CSI.		DEFL.	in	(loc)	l/defl	L/d	PLATES	GRIP
TCLL	20.0	Plate Grip DOL	1.25	TC	0.45	Vert(LL)	n/a	-	n/a	999	MT20	244/190
TCDL	7.0	Lumber DOL	1.25	BC	0.25	Vert(CT)	n/a	-	n/a	999		
BCLL	0.0 *	Rep Stress Incr	YES	WB	0.00	Horz(CT)	0.00		n/a	n/a		
BCDL	10.0	Code FBC2020/TPI2014		Matrix-P							Weight: 22 lb	FT = 20%

LUMBER-
TOP CHORD 2x4 SP No.2
BOT CHORD 2x4 SP No.2
WEBS 2x4 SP No.3

BRACING-
TOP CHORD Structural wood sheathing directly applied or 5-0-9 oc purlins, except end verticals.
BOT CHORD Rigid ceiling directly applied or 10-0-0 oc bracing.

REACTIONS. (size) 1=5-0-4, 3=5-0-4
Max Horz 1=129(LC 12)
Max Uplift 3=-99(LC 12)
Max Grav 1=166(LC 1), 3=179(LC 19)

FORCES. (lb) - Max. Comp./Max. Ten. - All forces 250 (lb) or less except when shown.

NOTES-
1) Wind: ASCE 7-16; Vult=130mph (3-second gust) Vasd=101mph; TCDL=4.2psf; BCDL=3.0psf; h=20ft; Cat. II; Exp B; Encl., GCpi=0.18; MWFRS (envelope) gable end zone and C-C Exterior(2E) 0-4-13 to 3-4-13, Interior(1) 3-4-13 to 4-10-13 zone;C-C for members and forces & MWFRS for reactions shown; Lumber DOL=1.60 plate grip DOL=1.60
2) Building Designer / Project engineer responsible for verifying applied roof live load shown covers rain loading requirements specific to the use of this truss component.
3) Gable requires continuous bottom chord bearing.
4) This truss has been designed for a 10.0 psf bottom chord live load nonconcurrent with any other live loads.
5) * This truss has been designed for a live load of 20.0psf on the bottom chord in all areas where a rectangle 3-6-0 tall by 2-0-0 wide will fit between the bottom chord and any other members.
6) Provide mechanical connection (by others) of truss to bearing plate capable of withstanding 100 lb uplift at joint(s) 3.

This item has been electronically signed and sealed by ORegan, Philip, PE using a Digital Signature. Printed copies of this document are not considered signed and sealed and the signature must be verified on any electronic copies.

Philip J. O'Regan PE No.58126
MiTek Inc. DBA MiTek USA FL Cert 6634
16023 Swingley Ridge Rd. Chesterfield, MO 63017
Date:

April 14,2023

WARNING - Verify design parameters and READ NOTES ON THIS AND INCLUDED MITEK REFERENCE PAGE MII-7473 rev. 5/19/2020 BEFORE USE.
Design valid for use only with MiTek® connectors. This design is based only upon parameters shown, and is for an individual building component, not a truss system. Before use, the building designer must verify the applicability of design parameters and properly incorporate this design into the overall building design. Bracing indicated is to prevent buckling of individual truss web and/or chord members only. Additional temporary and permanent bracing is always required for stability and to prevent collapse with possible personal injury and property damage. For general guidance regarding the fabrication, storage, delivery, erection and bracing of trusses and truss systems, see ***ANSI/TPI1 Quality Criteria, DSB-89 and BCSI Building Component Safety Information*** available from Truss Plate Institute, 2670 Crain Highway, Suite 203 Waldorf, MD 20601

MiTek
16023 Swingley Ridge Rd
Chesterfield, MO 63017

Job	Truss	Truss Type	Qty	Ply	CJ CONST. - CADY RES.
3371626	V04	Valley	1	1	T30317776 Job Reference (optional)

Builders FirstSource (Lake City,FL), Lake City, FL - 32055, 8.530 s Mar 9 2023 MiTek Industries, Inc. Thu Apr 13 14:25:41 2023 Page 1
ID:Ys8zlwKNmTR0LjtaCjYR7AyUufK-FmrtuhbCeujxxQorH9xibfKxzf4dYm2KoDbATAzR638

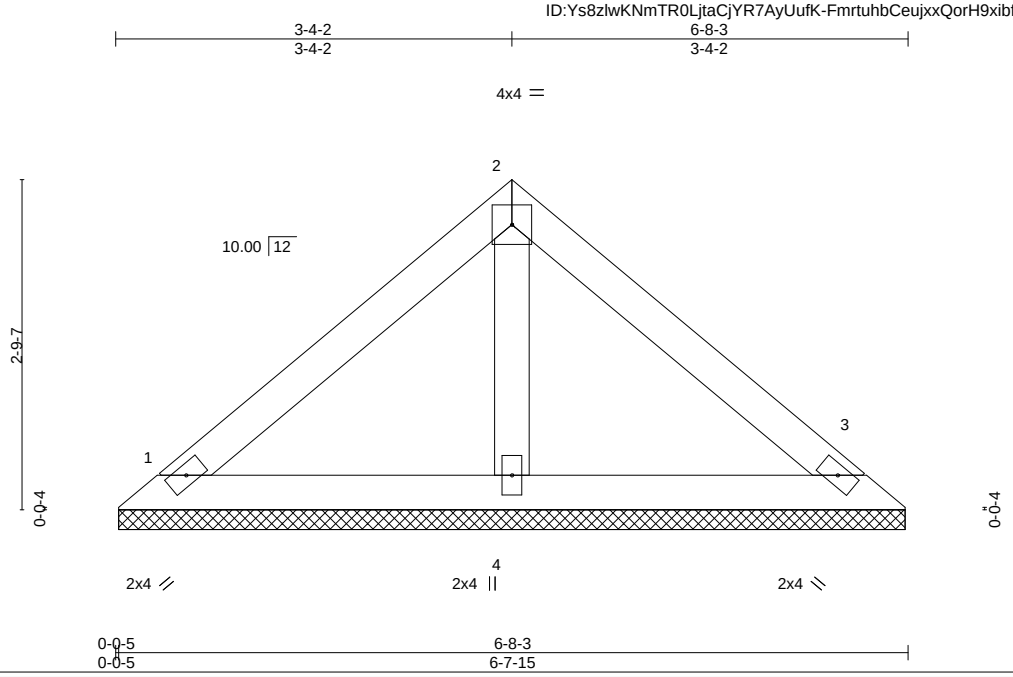

LOADING (psf)		SPACING- 2-0-0		CSI.		DEFL.	in	(loc)	l/defl	L/d	PLATES	GRIP
TCLL	20.0	Plate Grip DOL	1.25	TC	0.17	Vert(LL)	n/a	-	n/a	999	MT20	244/190
TCDL	7.0	Lumber DOL	1.25	BC	0.09	Vert(CT)	n/a	-	n/a	999		
BCLL	0.0 *	Rep Stress Incr	YES	WB	0.02	Horz(CT)	0.00	3	n/a	n/a		
BCDL	10.0	Code FBC2020/TPI2014		Matrix-P							Weight: 25 lb	FT = 20%

LUMBER-
TOP CHORD 2x4 SP No.2
BOT CHORD 2x4 SP No.2
OTHERS 2x4 SP No.3

BRACING-
TOP CHORD Structural wood sheathing directly applied or 6-0-0 oc purlins.
BOT CHORD Rigid ceiling directly applied or 10-0-0 oc bracing.

REACTIONS. (size) 1=6-7-10, 3=6-7-10, 4=6-7-10
Max Horz 1=54(LC 11)
Max Uplift 1=-35(LC 13), 3=-41(LC 13), 4=-12(LC 12)
Max Grav 1=124(LC 1), 3=124(LC 1), 4=188(LC 1)

FORCES. (lb) - Max. Comp./Max. Ten. - All forces 250 (lb) or less except when shown.

NOTES-
1) Unbalanced roof live loads have been considered for this design.
2) Wind: ASCE 7-16; Vult=130mph (3-second gust) Vasd=101mph; TCDL=4.2psf; BCDL=3.0psf; h=20ft; Cat. II; Exp B; Encl., GCpi=0.18; MWFRS (envelope) gable end zone and C-C Exterior(2E) zone;C-C for members and forces & MWFRS for reactions shown; Lumber DOL=1.60 plate grip DOL=1.60
3) Building Designer / Project engineer responsible for verifying applied roof live load shown covers rain loading requirements specific to the use of this truss component.
4) Gable requires continuous bottom chord bearing.
5) This truss has been designed for a 10.0 psf bottom chord live load nonconcurrent with any other live loads.
6) * This truss has been designed for a live load of 20.0psf on the bottom chord in all areas where a rectangle 3-6-0 tall by 2-0-0 wide will fit between the bottom chord and any other members.
7) Provide mechanical connection (by others) of truss to bearing plate capable of withstanding 100 lb uplift at joint(s) 1, 3, 4.

This item has been electronically signed and sealed by ORegan, Philip, PE using a Digital Signature. Printed copies of this document are not considered signed and sealed and the signature must be verified on any electronic copies.

Philip J. O'Regan PE No.58126
MiTek Inc. DBA MiTek USA FL Cert 6634
16023 Swingley Ridge Rd. Chesterfield, MO 63017
Date:

April 14,2023

WARNING - Verify design parameters and READ NOTES ON THIS AND INCLUDED MITEK REFERENCE PAGE MII-7473 rev. 5/19/2020 BEFORE USE.
Design valid for use only with MiTek® connectors. This design is based only upon parameters shown, and is for an individual building component, not a truss system. Before use, the building designer must verify the applicability of design parameters and properly incorporate this design into the overall building design. Bracing indicated is to prevent buckling of individual truss web and/or chord members only. Additional temporary and permanent bracing is always required for stability and to prevent collapse with possible personal injury and property damage. For general guidance regarding the fabrication, storage, delivery, erection and bracing of trusses and truss systems, see ***ANSI/TPI1 Quality Criteria, DSB-89 and BCSI Building Component Safety Information*** available from Truss Plate Institute, 2670 Crain Highway, Suite 203 Waldorf, MD 20601

MiTek
16023 Swingley Ridge Rd
Chesterfield, MO 63017

Job	Truss	Truss Type	Qty	Ply	CJ CONST. - CADY RES.
3371626	V05	GABLE	2	1	T30317777 Job Reference (optional)

Builders FirstSource (Lake City,FL), Lake City, FL - 32055, 8.530 s Mar 9 2023 MiTek Industries, Inc. Thu Apr 13 14:25:42 2023 Page 1
ID:Ys8zlwKNmTR0LjtaCjYR7AyUufK-jyPF61cqPCroZaN2rsSx7st8b3RnHDpU1tLj0czR637

6-7-4
6-7-4

Scale = 1:30.2

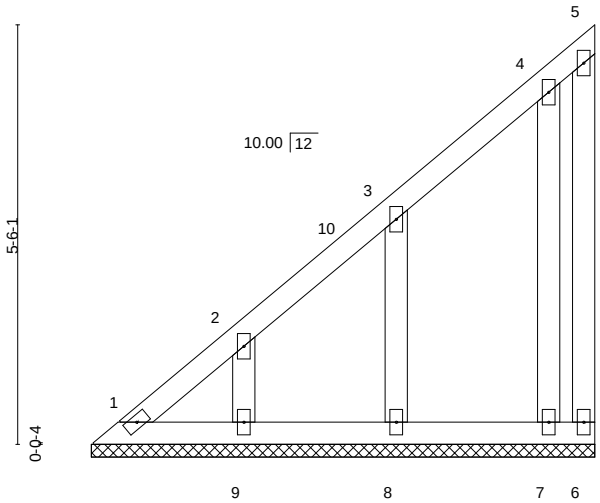

LOADING (psf)		SPACING- 2-0-0		CSI.		DEFL.	in	(loc)	l/defl	L/d	PLATES	GRIP
TCLL	20.0	Plate Grip DOL	1.25	TC	0.05	Vert(LL)	n/a	-	n/a	999	MT20	244/190
TCDL	7.0	Lumber DOL	1.25	BC	0.03	Vert(CT)	n/a	-	n/a	999		
BCLL	0.0 *	Rep Stress Incr	YES	WB	0.05	Horz(CT)	0.00		n/a	n/a		
BCDL	10.0	Code FBC2020/TPI2014		Matrix-P							Weight: 41 lb	FT = 20%

LUMBER-
TOP CHORD 2x4 SP No.2
BOT CHORD 2x4 SP No.2
WEBS 2x4 SP No.3
OTHERS 2x4 SP No.3

BRACING-
TOP CHORD Structural wood sheathing directly applied or 6-0-0 oc purlins, except end verticals.
BOT CHORD Rigid ceiling directly applied or 10-0-0 oc bracing.

TRUSS DESIGNED FOR WIND LOADS IN THE PLANE OF THE TRUSS ONLY. FOR STUDS EXPOSED TO WIND (NORMAL TO THE FACE), SEE STANDARD INDUSTRY GABLE END DETAILS AS APPLICABLE, OR CONSULT QUALIFIED BUILDING DESIGNER AS PER ANSI/TPI 1.

REACTIONS. All bearings 6-7-4.
(lb) - Max Horz 1=170(LC 12)
Max Uplift All uplift 100 lb or less at joint(s) 1, 6, 9, 8, 7
Max Grav All reactions 250 lb or less at joint(s) 1, 6, 9, 8, 7

FORCES. (lb) - Max. Comp./Max. Ten. - All forces 250 (lb) or less except when shown.
TOP CHORD 1-2=-315/135

NOTES-
1) Wind: ASCE 7-16; Vult=130mph (3-second gust) Vasd=101mph; TCDL=4.2psf; BCDL=3.0psf; h=20ft; Cat. II; Exp B; Encl., GCpi=0.18; MWFRS (envelope) gable end zone and C-C Exterior(2E) 0-4-13 to 3-4-13, Interior(1) 3-4-13 to 6-5-8 zone;C-C for members and forces & MWFRS for reactions shown; Lumber DOL=1.60 plate grip DOL=1.60
2) Building Designer / Project engineer responsible for verifying applied roof live load shown covers rain loading requirements specific to the use of this truss component.
3) All plates are 2x4 MT20 unless otherwise indicated.
4) Gable requires continuous bottom chord bearing.
5) This truss has been designed for a 10.0 psf bottom chord live load nonconcurrent with any other live loads.
6) * This truss has been designed for a live load of 20.0psf on the bottom chord in all areas where a rectangle 3-6-0 tall by 2-0-0 wide will fit between the bottom chord and any other members.
7) Provide mechanical connection (by others) of truss to bearing plate capable of withstanding 100 lb uplift at joint(s) 1, 6, 9, 8, 7.

This item has been electronically signed and sealed by ORegan, Philip, PE using a Digital Signature. Printed copies of this document are not considered signed and sealed and the signature must be verified on any electronic copies.

Philip J. O'Regan PE No.58126
MiTek Inc. DBA MiTek USA FL Cert 6634
16023 Swingley Ridge Rd. Chesterfield, MO 63017
Date:

April 14,2023

WARNING - Verify design parameters and READ NOTES ON THIS AND INCLUDED MITEK REFERENCE PAGE MII-7473 rev. 5/19/2020 BEFORE USE.
Design valid for use only with MiTek® connectors. This design is based only upon parameters shown, and is for an individual building component, not a truss system. Before use, the building designer must verify the applicability of design parameters and properly incorporate this design into the overall building design. Bracing indicated is to prevent buckling of individual truss web and/or chord members only. Additional temporary and permanent bracing is always required for stability and to prevent collapse with possible personal injury and property damage. For general guidance regarding the fabrication, storage, delivery, erection and bracing of trusses and truss systems, see ***ANSI/TPI1 Quality Criteria, DSB-89 and BCSI Building Component Safety Information*** available from Truss Plate Institute, 2670 Crain Highway, Suite 203 Waldorf, MD 20601

MiTek
16023 Swingley Ridge Rd
Chesterfield, MO 63017

Job	Truss	Truss Type	Qty	Ply	CJ CONST. - CADY RES.
3371626	V06	Valley	1	1	T30317778 Job Reference (optional)

Builders FirstSource (Lake City,FL), Lake City, FL - 32055, 8.530 s Mar 9 2023 MiTek Industries, Inc. Thu Apr 13 14:25:44 2023 Page 1
ID:Ys8zlwKNmTR0LjtaCjYR7AyUufK-fLX?Xje4xp5WouXQzHVPCHySXs5tl6onVBqq4VzR635

Scale = 1:37.6

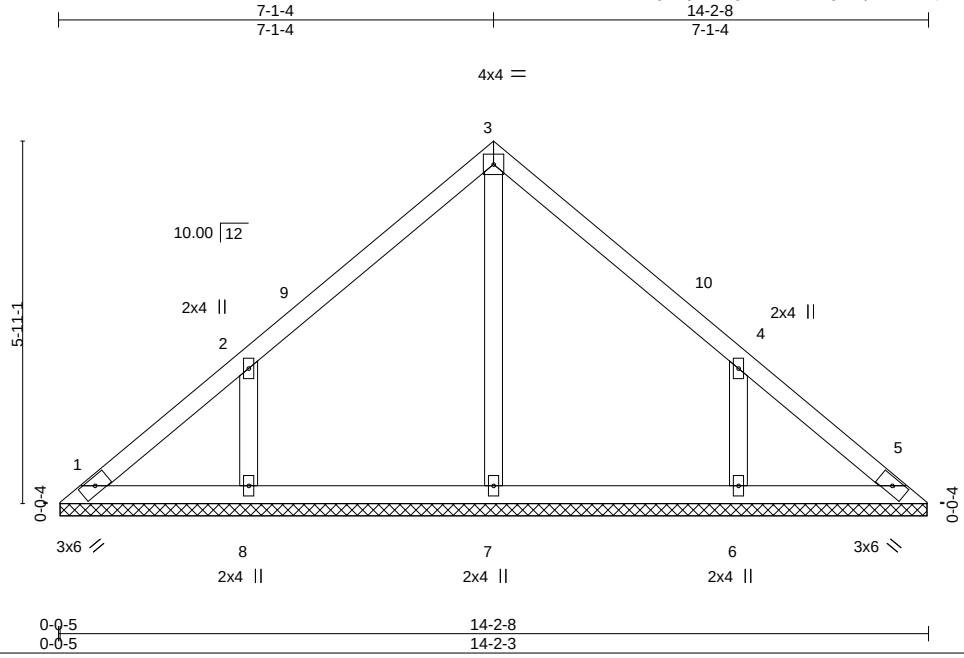

LOADING (psf)		SPACING-	2-0-0	CSI.		DEFL.	in	(loc)	l/defl	L/d	PLATES	GRIP
TCLL	20.0	Plate Grip DOL	1.25	TC	0.15	Vert(LL)	n/a	-	n/a	999	MT20	244/190
TCDL	7.0	Lumber DOL	1.25	BC	0.12	Vert(CT)	n/a	-	n/a	999		
BCLL	0.0 *	Rep Stress Incr	YES	WB	0.09	Horz(CT)	0.00	5	n/a	n/a		
BCDL	10.0	Code FBC2020/TPI2014		Matrix-S							Weight: 61 lb	FT = 20%

LUMBER-
TOP CHORD 2x4 SP No.2
BOT CHORD 2x4 SP No.2
OTHERS 2x4 SP No.3

BRACING-
TOP CHORD Structural wood sheathing directly applied or 6-0-0 oc purlins.
BOT CHORD Rigid ceiling directly applied or 10-0-0 oc bracing.

REACTIONS. All bearings 14-1-15.
(lb) - Max Horz 1=123(LC 9)
Max Uplift All uplift 100 lb or less at joint(s) 1, 5 except 8=-180(LC 12), 6=-180(LC 13)
Max Grav All reactions 250 lb or less at joint(s) 1, 5, 7 except 8=317(LC 19), 6=316(LC 20)

FORCES. (lb) - Max. Comp./Max. Ten. - All forces 250 (lb) or less except when shown.

NOTES-
1) Unbalanced roof live loads have been considered for this design.
2) Wind: ASCE 7-16; Vult=130mph (3-second gust) Vasd=101mph; TCDL=4.2psf; BCDL=3.0psf; h=20ft; Cat. II; Exp B; Encl., GCpi=0.18; MWFRS (envelope) gable end zone and C-C Exterior(2E) 0-4-13 to 3-1-4, Interior(1) 3-1-4 to 7-1-4, Exterior(2R) 7-1-4 to 10-1-4, Interior(1) 10-1-4 to 13-9-11 zone;C-C for members and forces & MWFRS for reactions shown; Lumber DOL=1.60 plate grip DOL=1.60
3) Building Designer / Project engineer responsible for verifying applied roof live load shown covers rain loading requirements specific to the use of this truss component.
4) Gable requires continuous bottom chord bearing.
5) This truss has been designed for a 10.0 psf bottom chord live load nonconcurrent with any other live loads.
6) * This truss has been designed for a live load of 20.0psf on the bottom chord in all areas where a rectangle 3-6-0 tall by 2-0-0 wide will fit between the bottom chord and any other members.
7) Provide mechanical connection (by others) of truss to bearing plate capable of withstanding 100 lb uplift at joint(s) 1, 5 except (jt=lb) 8=180, 6=180.

This item has been electronically signed and sealed by ORegan, Philip, PE using a Digital Signature. Printed copies of this document are not considered signed and sealed and the signature must be verified on any electronic copies.

Philip J. O'Regan PE No.58126
MiTek Inc. DBA MiTek USA FL Cert 6634
16023 Swingley Ridge Rd. Chesterfield, MO 63017
Date:

April 14,2023

WARNING - Verify design parameters and READ NOTES ON THIS AND INCLUDED MITEK REFERENCE PAGE MII-7473 rev. 5/19/2020 BEFORE USE.
Design valid for use only with MiTek® connectors. This design is based only upon parameters shown, and is for an individual building component, not a truss system. Before use, the building designer must verify the applicability of design parameters and properly incorporate this design into the overall building design. Bracing indicated is to prevent buckling of individual truss web and/or chord members only. Additional temporary and permanent bracing is always required for stability and to prevent collapse with possible personal injury and property damage. For general guidance regarding the fabrication, storage, delivery, erection and bracing of trusses and truss systems, see ***ANSI/TPI1 Quality Criteria, DSB-89 and BCSI Building Component Safety Information*** available from Truss Plate Institute, 2670 Crain Highway, Suite 203 Waldorf, MD 20601

MiTek
16023 Swingley Ridge Rd
Chesterfield, MO 63017

Job	Truss	Truss Type	Qty	Ply	CJ CONST. - CADY RES.
3371626	V07	Valley	1	1	T30317779 Job Reference (optional)

Builders FirstSource (Lake City,FL), Lake City, FL - 32055, 8.530 s Mar 9 2023 MiTek Industries, Inc. Thu Apr 13 14:25:45 2023 Page 1
ID:Ys8zlwKNmTR0LjtaCjYR7AyUufK-7X5Nk3eii7EMQ25dW?0elVVbSGPWUaQwjrZNcxzR634

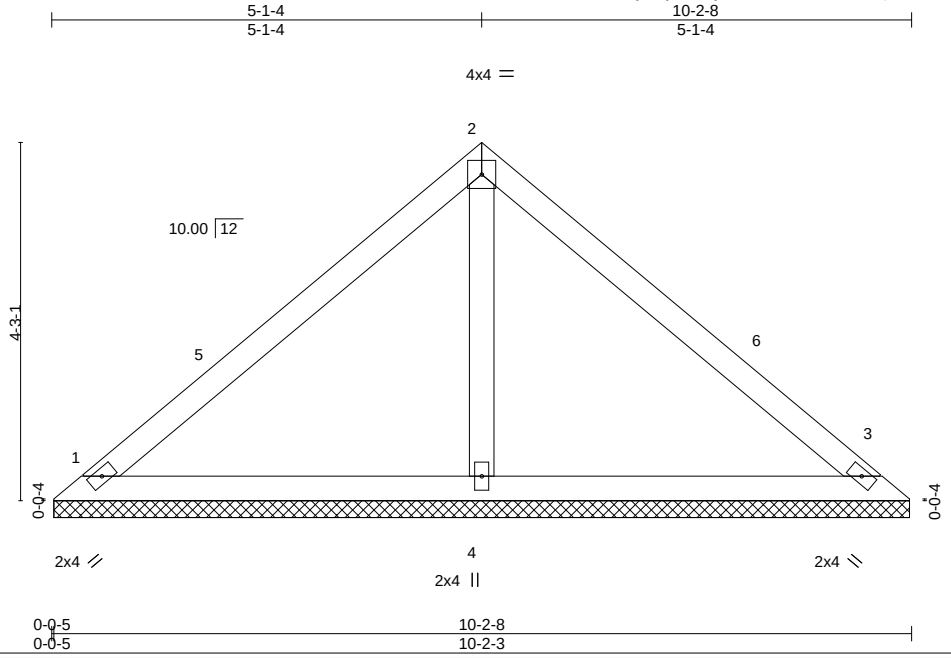

LOADING (psf)		SPACING-	2-0-0	CSI.		DEFL.	in	(loc)	l/defl	L/d	PLATES	GRIP
TCLL	20.0	Plate Grip DOL	1.25	TC	0.27	Vert(LL)	n/a	-	n/a	999	MT20	244/190
TCDL	7.0	Lumber DOL	1.25	BC	0.22	Vert(CT)	n/a	-	n/a	999		
BCLL	0.0 *	Rep Stress Incr	YES	WB	0.06	Horz(CT)	0.00	3	n/a	n/a		
BCDL	10.0	Code FBC2020/TPI2014		Matrix-S							Weight: 39 lb	FT = 20%

LUMBER-
TOP CHORD 2x4 SP No.2
BOT CHORD 2x4 SP No.2
OTHERS 2x4 SP No.3

BRACING-
TOP CHORD Structural wood sheathing directly applied or 6-0-0 oc purlins.
BOT CHORD Rigid ceiling directly applied or 10-0-0 oc bracing.

REACTIONS. (size) 1=10-1-15, 3=10-1-15, 4=10-1-15
Max Horz 1=86(LC 9)
Max Uplift 1=-44(LC 13), 3=-54(LC 13), 4=-42(LC 12)
Max Grav 1=183(LC 1), 3=183(LC 1), 4=330(LC 1)

FORCES. (lb) - Max. Comp./Max. Ten. - All forces 250 (lb) or less except when shown.

NOTES-
1) Unbalanced roof live loads have been considered for this design.
2) Wind: ASCE 7-16; Vult=130mph (3-second gust) Vasd=101mph; TCDL=4.2psf; BCDL=3.0psf; h=20ft; Cat. II; Exp B; Encl., GCpi=0.18; MWFRS (envelope) gable end zone and C-C Exterior(2E) 0-4-13 to 3-4-13, Interior(1) 3-4-13 to 5-1-4, Exterior(2R) 5-1-4 to 8-1-4, Interior(1) 8-1-4 to 9-9-11 zone;C-C for members and forces & MWFRS for reactions shown; Lumber DOL=1.60 plate grip DOL=1.60
3) Building Designer / Project engineer responsible for verifying applied roof live load shown covers rain loading requirements specific to the use of this truss component.
4) Gable requires continuous bottom chord bearing.
5) This truss has been designed for a 10.0 psf bottom chord live load nonconcurrent with any other live loads.
6) * This truss has been designed for a live load of 20.0psf on the bottom chord in all areas where a rectangle 3-6-0 tall by 2-0-0 wide will fit between the bottom chord and any other members.
7) Provide mechanical connection (by others) of truss to bearing plate capable of withstanding 100 lb uplift at joint(s) 1, 3, 4.

This item has been electronically signed and sealed by ORegan, Philip, PE using a Digital Signature. Printed copies of this document are not considered signed and sealed and the signature must be verified on any electronic copies.

Philip J. O'Regan PE No.58126
MiTek Inc. DBA MiTek USA FL Cert 6634
16023 Swingley Ridge Rd. Chesterfield, MO 63017
Date:

April 14,2023

WARNING - Verify design parameters and READ NOTES ON THIS AND INCLUDED MITEK REFERENCE PAGE MII-7473 rev. 5/19/2020 BEFORE USE.
Design valid for use only with MiTek® connectors. This design is based only upon parameters shown, and is for an individual building component, not a truss system. Before use, the building designer must verify the applicability of design parameters and properly incorporate this design into the overall building design. Bracing indicated is to prevent buckling of individual truss web and/or chord members only. Additional temporary and permanent bracing is always required for stability and to prevent collapse with possible personal injury and property damage. For general guidance regarding the fabrication, storage, delivery, erection and bracing of trusses and truss systems, see ***ANSI/TPI1 Quality Criteria, DSB-89 and BCSI Building Component Safety Information*** available from Truss Plate Institute, 2670 Crain Highway, Suite 203 Waldorf, MD 20601

MiTek
16023 Swingley Ridge Rd
Chesterfield, MO 63017

Job	Truss	Truss Type	Qty	Ply	CJ CONST. - CADY RES.
3371626	V08	Valley	1	1	T30317780 Job Reference (optional)

Builders FirstSource (Lake City,FL), Lake City, FL - 32055, 8.530 s Mar 9 2023 MiTek Industries, Inc. Thu Apr 13 14:25:46 2023 Page 1
ID:Ys8zlwKNmTR0LjtaCjYR7AyUufK-bjemxPfLTRMD2Cgp4iXtli2o3gn?D1J4yVJx9OzR633

Scale = 1:18.2

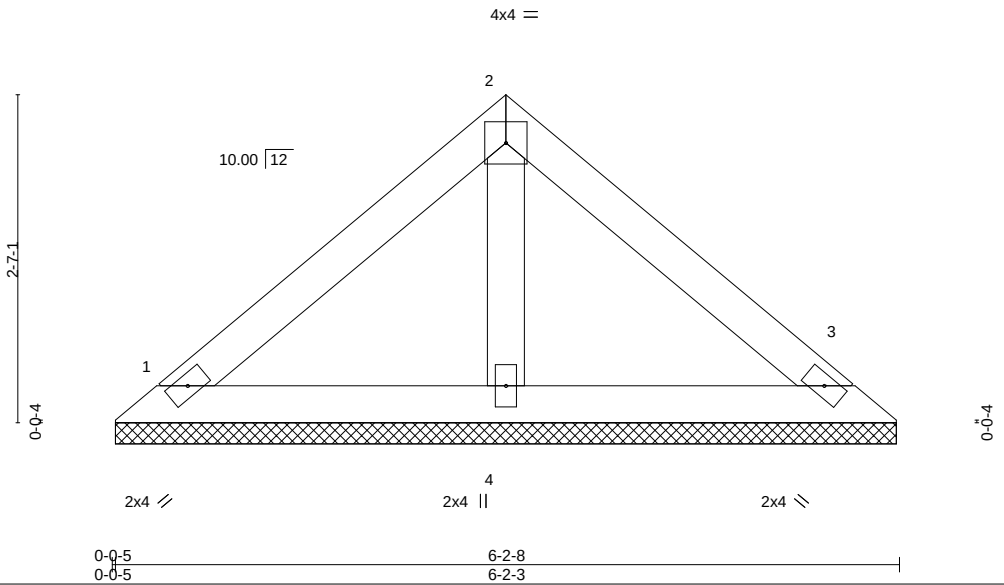

LOADING (psf)		SPACING- 2-0-0		CSI.		DEFL.	in	(loc)	l/defl	L/d	PLATES	GRIP
TCLL	20.0	Plate Grip DOL	1.25	TC	0.15	Vert(LL)	n/a	-	n/a	999	MT20	244/190
TCDL	7.0	Lumber DOL	1.25	BC	0.07	Vert(CT)	n/a	-	n/a	999		
BCLL	0.0 *	Rep Stress Incr	YES	WB	0.02	Horz(CT)	0.00	3	n/a	n/a		
BCDL	10.0	Code FBC2020/TPI2014		Matrix-P							Weight: 23 lb	FT = 20%

LUMBER-
TOP CHORD 2x4 SP No.2
BOT CHORD 2x4 SP No.2
OTHERS 2x4 SP No.3

BRACING-
TOP CHORD Structural wood sheathing directly applied or 6-0-0 oc purlins.
BOT CHORD Rigid ceiling directly applied or 10-0-0 oc bracing.

REACTIONS. (size) 1=6-1-15, 3=6-1-15, 4=6-1-15
Max Horz 1=-50(LC 8)
Max Uplift 1=-32(LC 13), 3=-38(LC 13), 4=-11(LC 12)
Max Grav 1=114(LC 1), 3=114(LC 1), 4=173(LC 1)

FORCES. (lb) - Max. Comp./Max. Ten. - All forces 250 (lb) or less except when shown.

NOTES-
1) Unbalanced roof live loads have been considered for this design.
2) Wind: ASCE 7-16; Vult=130mph (3-second gust) Vasd=101mph; TCDL=4.2psf; BCDL=3.0psf; h=20ft; Cat. II; Exp B; Encl., GCpi=0.18; MWFRS (envelope) gable end zone and C-C Exterior(2E) zone;C-C for members and forces & MWFRS for reactions shown; Lumber DOL=1.60 plate grip DOL=1.60
3) Building Designer / Project engineer responsible for verifying applied roof live load shown covers rain loading requirements specific to the use of this truss component.
4) Gable requires continuous bottom chord bearing.
5) This truss has been designed for a 10.0 psf bottom chord live load nonconcurrent with any other live loads.
6) * This truss has been designed for a live load of 20.0psf on the bottom chord in all areas where a rectangle 3-6-0 tall by 2-0-0 wide will fit between the bottom chord and any other members.
7) Provide mechanical connection (by others) of truss to bearing plate capable of withstanding 100 lb uplift at joint(s) 1, 3, 4.

This item has been electronically signed and sealed by ORegan, Philip, PE using a Digital Signature. Printed copies of this document are not considered signed and sealed and the signature must be verified on any electronic copies.

Philip J. O'Regan PE No.58126
MiTek Inc. DBA MiTek USA FL Cert 6634
16023 Swingley Ridge Rd. Chesterfield, MO 63017
Date:

April 14,2023

WARNING - Verify design parameters and READ NOTES ON THIS AND INCLUDED MITEK REFERENCE PAGE MII-7473 rev. 5/19/2020 BEFORE USE.
Design valid for use only with MiTek® connectors. This design is based only upon parameters shown, and is for an individual building component, not a truss system. Before use, the building designer must verify the applicability of design parameters and properly incorporate this design into the overall building design. Bracing indicated is to prevent buckling of individual truss web and/or chord members only. Additional temporary and permanent bracing is always required for stability and to prevent collapse with possible personal injury and property damage. For general guidance regarding the fabrication, storage, delivery, erection and bracing of trusses and truss systems, see ***ANSI/TPI1 Quality Criteria, DSB-89 and BCSI Building Component Safety Information*** available from Truss Plate Institute, 2670 Crain Highway, Suite 203 Waldorf, MD 20601

MiTek
16023 Swingley Ridge Rd
Chesterfield, MO 63017

Symbols

PLATE LOCATION AND ORIENTATION

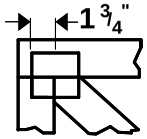

Center plate on joint unless x, y offsets are indicated. Dimensions are in ft-in-sixteenths. Apply plates to both sides of truss and fully embed teeth.

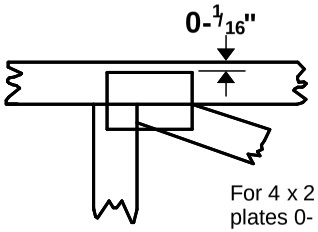

For 4 x 2 orientation, locate plates 0- 1/16" from outside edge of truss.

This symbol indicates the required direction of slots in connector plates.

*** Plate location details available in MiTek 20/20 software or upon request.**

PLATE SIZE

4 x 4

The first dimension is the plate width measured perpendicular to slots. Second dimension is the length parallel to slots.

LATERAL BRACING LOCATION

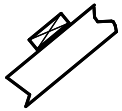

Indicated by symbol shown and/or by text in the bracing section of the output. Use T or I bracing if indicated.

BEARING

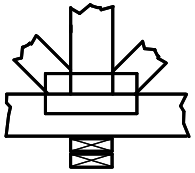

Indicates location where bearings (supports) occur. Icons vary but reaction section indicates joint number where bearings occur. Min size shown is for crushing only.

Industry Standards:

ANSI/TPI1: National Design Specification for Metal Plate Connected Wood Truss Construction.
DSB-89: Design Standard for Bracing.
BCSI: Building Component Safety Information, Guide to Good Practice for Handling, Installing & Bracing of Metal Plate Connected Wood Trusses.

Numbering System

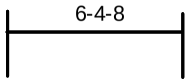

dimensions shown in ft-in-sixteenths
(Drawings not to scale)

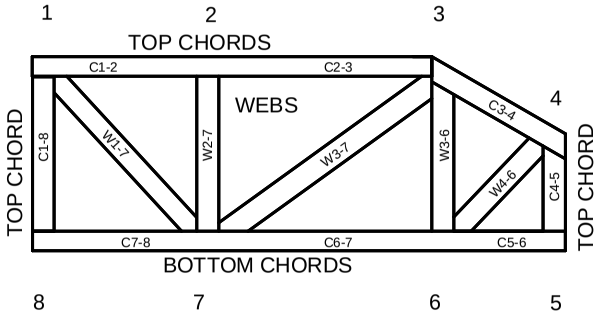

JOINTS ARE GENERALLY NUMBERED/LETTERED CLOCKWISE AROUND THE TRUSS STARTING AT THE JOINT FARTHEST TO THE LEFT.

CHORDS AND WEBS ARE IDENTIFIED BY END JOINT NUMBERS/LETTERS.

PRODUCT CODE APPROVALS

ICC-ES Reports:

ESR-1311, ESR-1352, ESR1988
ER-3907, ESR-2362, ESR-1397, ESR-3282

Trusses are designed for wind loads in the plane of the truss unless otherwise shown.

Lumber design values are in accordance with ANSI/TPI 1 section 6.3 These truss designs rely on lumber values established by others.

© 2012 MiTek® All Rights Reserved

MiTek Engineering Reference Sheet: MII-7473 rev. 5/19/2020

General Safety Notes

Failure to Follow Could Cause Property Damage or Personal Injury

1. Additional stability bracing for truss system, e.g. diagonal or X-bracing, is always required. See BCSI.
2. Truss bracing must be designed by an engineer. For wide truss spacing, individual lateral braces themselves may require bracing, or alternative Tor I bracing should be considered.
3. Never exceed the design loading shown and never stack materials on inadequately braced trusses.
4. Provide copies of this truss design to the building designer, erection supervisor, property owner and all other interested parties.
5. Cut members to bear tightly against each other.
6. Place plates on each face of truss at each joint and embed fully. Knots and wane at joint locations are regulated by ANSI/TPI 1.
7. Design assumes trusses will be suitably protected from the environment in accord with ANSI/TPI 1.
8. Unless otherwise noted, moisture content of lumber shall not exceed 19% at time of fabrication.
9. Unless expressly noted, this design is not applicable for use with fire retardant, preservative treated, or green lumber.
10. Camber is a non-structural consideration and is the responsibility of truss fabricator. General practice is to camber for dead load deflection.
11. Plate type, size, orientation and location dimensions indicated are minimum plating requirements.
12. Lumber used shall be of the species and size, and in all respects, equal to or better than that specified.
13. Top chords must be sheathed or purlins provided at spacing indicated on design.
14. Bottom chords require lateral bracing at 10 ft. spacing, or less, if no ceiling is installed, unless otherwise noted.
15. Connections not shown are the responsibility of others.
16. Do not cut or alter truss member or plate without prior approval of an engineer.
17. Install and load vertically unless indicated otherwise.
18. Use of green or treated lumber may pose unacceptable environmental, health or performance risks. Consult with project engineer before use.
19. Review all portions of this design (front, back, words and pictures) before use. Reviewing pictures alone is not sufficient.
20. Design assumes manufacture in accordance with ANSI/TPI 1 Quality Criteria.
21. The design does not take into account any dynamic or other loads other than those expressly stated.