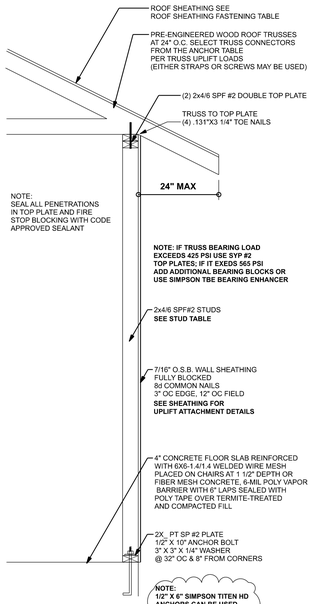

ONE STORY WALL SECTION

SCALE: 3/4" = 1'-0"

ROOF SHEATHING FASTENING TABLE (RAFTER / TRUSS SG = 0.49)

Wind Speed	Sheathing Thickness Plywood Or OSB	Required Nail	Nail spacing along panel edges	Nail spacing along intermediate supports in the panel field
120 mph Exp. B	7/16"	ASTM F1667 RSRS-01 (2 3/8" x 0.113")	6" oc	12" oc
120 mph Exp. C	7/16"	ASTM F1667 RSRS-01 (2 3/8" x 0.113")	6" oc	6" oc
120 mph Exp. D	19/32"	ASTM F1667 RSRS-03 (2 1/2" x 0.131") or ASTM F1667 RSRS-04 (3" x 0.120")	6" oc	6" oc
130 mph Exp. B	7/16"	ASTM F1667 RSRS-01 (2 3/8" x 0.113")	6" oc	6" oc
130 mph Exp. C	**15/32"**	**ASTM F1667 RSRS-01 (2 3/8" x 0.113")**	**6" oc**	**6" oc**
130 mph Exp. D	19/32"	ASTM F1667 RSRS-03 (2 1/2" x 0.131") or ASTM F1667 RSRS-04 (3" x 0.120")	6" oc	6" oc
140 mph Exp. B	7/16"	ASTM F1667 RSRS-01 (2 3/8" x 0.113")	6" oc	6" oc
140 mph Exp. C	19/32"	ASTM F1667 RSRS-03 (2 1/2" x 0.131") or ASTM F1667 RSRS-04 (3" x 0.120")	6" oc	6" oc
140 mph Exp. D	19/32"	ASTM F1667 RSRS-03 (2 1/2" x 0.131") or ASTM F1667 RSRS-04 (3" x 0.120")	6" oc	6" oc
150 mph Exp. C	19/32"	ASTM F1667 RSRS-03 (2 1/2" x 0.131") or ASTM F1667 RSRS-04 (3" x 0.120")	6" oc	6" oc
150 mph Exp. D	19/32"	ASTM F1667 RSRS-03 (2 1/2" x 0.131") or ASTM F1667 RSRS-04 (3" x 0.120")	4" oc	4" oc

Note: For sheathing located a minimum of 4 feet from the perimeter edge of the roof, including 4 feet on each side of ridges and hips, nail spacing is permitted to be 6 inches on center along panel edges and 6 inches on center along intermediate supports in the panel field. Note: This table specifies the code minimum thickness of wood sheathing. The thickness of the sheathing may need to be increased based in the type of roofing material being used. See manufacturer Florida product approval.

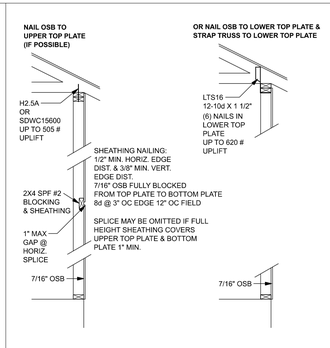

SHEATHING FOR UPLIFT ATTACHMENT DETAILS

ONE STORY WOOD FRAME

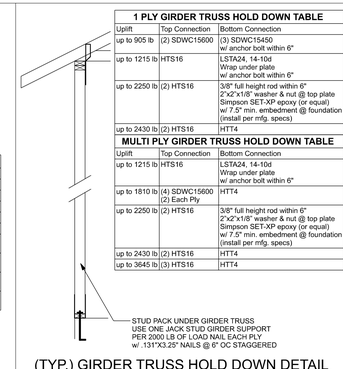

1 PLY GIRDER TRUSS HOLD DOWN TABLE

Uplift	Top Connection	Bottom Connection
up to 905 lb	(2) SDWC15600	(3) SDWC15450 w/ anchor bolt within 6"
up to 1215 lb	HTS16	LSTA24, 14-10d Wrap under plate w/ anchor bolt within 6"
up to 2250 lb	(2) HTS16	3/8" full height rod within 6" 2"x2"x1/8" washer & nut @ top plate Simpson SET-XP epoxy (or equal) w/ 7.5" min. embedment @ foundation (install per mfg. specs)
up to 2430 lb	(2) HTS16	HTT4

MULTI PLY GIRDER TRUSS HOLD DOWN TABLE

Uplift	Top Connection	Bottom Connection
up to 1215 lb	HTS16	LSTA24, 14-10d Wrap under plate w/ anchor bolt within 6"
up to 1810 lb	(4) SDWC15600 (2) Each Ply	HTT4
up to 2250 lb	(2) HTS16	3/8" full height rod within 6" 2"x2"x1/8" washer & nut @ top plate Simpson SET-XP epoxy (or equal) w/ 7.5" min. embedment @ foundation (install per mfg. specs)
up to 2430 lb	(2) HTS16	HTT4
up to 3645 lb	(3) HTS16	HTT4

(TYP.) GIRDER TRUSS HOLD DOWN DETAIL

WOOD FRAME w/ STRAPS & ANCHORS

INTERIOR BEARING WALL UPLIFT STRAP OR SCREW TABLE

Uplift on wall	Top Connection	Bottom Connection	Anchor Bolt Spacing
227 plf	SP2 @ 32" OC	SP1 @ 32" OC	48" OC
454 plf	SP2 @ 16" OC	SP1 @ 16" OC	32" OC
223 plf	(2) SDWC15600 @ 48" OC	(3) SDWC15450 @ 48" OC	48" OC
336 plf	(2) SDWC15600 @ 32" OC	(3) SDWC15450 @ 32" OC	48" OC
672 plf	(2) SDWC15600 @ 16" OC	(3) SDWC15450 @ 16" OC	24" OC
257 plf	SPH4/6, (12) .148" x 1 1/2" @ 48" OC	SPH4/6, (12) .148" x 1 1/2" @ 48" OC	48" OC
387 plf	SPH4/6, (12) .148" x 1 1/2" @ 32" OC	SPH4/6, (12) .148" x 1 1/2" @ 32" OC	32" OC
309 plf	LSTA24, (14) .148" x 1 1/2" @ 48" OC Wrap Under Plate	LSTA24, (14) .148" x 1 1/2" @ 48" OC Wrap Over Plate	48" OC
465 plf	LSTA24, (14) .148" x 1 1/2" @ 32" OC Wrap Under Plate	LSTA24, (14) .148" x 1 1/2" @ 32" OC Wrap Over Plate	32" OC

INTERIOR BEARING WALL UPLIFT ROD TABLE

Uplift on wall	Full Height All Threaded Rod
197 plf	3/8" Rod @ 64" OC, 2"x2"x1/8" washer & nut top, THD37634RC bottom
263 plf	3/8" Rod @ 48" OC, 2"x2"x1/8" washer & nut top, THD37634RC bottom
562 plf	3/8" Rod @ 48" OC, 2"x2"x1/8" washer & nut top, Simpson SET-XP epoxy (or equal) w/ 7.5" min. embedment bottom

(TYP.) INTERIOR BEARING WALL

ONE STORY WOOD FRAME w/ STRAPS & ANCHORS

CONNECTOR TABLE

Uplift SP	Uplift SPF	Truss Connector	To Plate	To Truss/Rafter
805	505	SDWC15600	-	-
400	290	H3	4-.131"x1 1/2"	4-.131"x1 1/2"
625	540	H2.5A	5-.131"x1 1/2"	5-.131"x1 1/2"
1040	1015	H10A	9-.148"x1 1/2"	9-.148"x1 1/2"
645	515	LTS12-20	6-.148"x1 1/2"	6-.148"x1 1/2"
990	850	MTS12-30	7-.148"x1 1/2"	7-.148"x1 1/2"
1415	1215	MTS16-30	8-.148"x1 1/2"	8-.148"x1 1/2"
Uplift SP	**Uplift SPF**	**Strap Ties**	**To One Member**	**To Other Member**
1235	1235	LSTA21	8-.148"x1 1/2"	8-.148"x1 1/2"
1640	1460	MSTA24	9-.148"x1 1/2"	9-.148"x1 1/2"
1030	1030	CS20	7-.148"x1 1/2"	7-.148"x1 1/2"
Uplift SP	**Uplift SPF**	**Stud Plate Ties**	**To Stud**	**To Plate**
555	535	SP1	4-.148"x3"	4-.148"x3"
1010	605	SP2	6-.148"x3"	6-.148"x3"
1280	1100	SPH4/6	12-.148"x1 1/2"	wrap under or over plate
771	771	LSTA24	10-.148"x1 1/2"	wrap under or over plate
1235	1235	LSTA24	14-.148"x1 1/2"	wrap under or over plate
Uplift SP	**Uplift SPF**	**Holdowns @ Stemwall**	**To Stud / Post**	**Anchor**
2145	1835	DTT2Z	8-SDS 1/4"x1 1/2"	1/2"x12" Titen HD
4235	3640	HTT4	18-.162"x2 1/2"	1/2"x12" Titen HD
Uplift SP	**Uplift SPF**	**Holdowns @ Mono**	**To Stud / Post**	**Anchor**
2145	1835	DTT2Z	8-SDS 1/4"x1 1/2"	1/2"x6" Titen HD
4235	3640	HTT4	18-.162"x2 1/2"	1/2"x12" Titen HD
Uplift SP	**Uplift SPF**	**Post Bases @ Stemwall**	**To Post**	**Anchor**
1900		ABU44Z	12-.162"x3 1/2"	5/8"x17" Drill & Epoxy
2475		ABU66Z	12-.162"x3 1/2"	5/8"x7" Drill & Epoxy
Uplift SP	**Uplift SPF**	**Post Bases @ Mono**	**To Post**	**Anchor**
1900		ABU44Z	12-.162"x3 1/2"	5/8"x7" Drill & Epoxy
2475		ABU66Z	12-.162"x3 1/2"	5/8"x7" Drill & Epoxy

EXTERIOR WALL STUD TABLE FOR SPF #2 STUDS:

THIS STUD HEIGHT TABLE IS PER 2012 WFCM, TABLE 3.20B5, EXTERIOR LOAD BEARING & NON LOAD BEARING STUD LENGTHS FOR WALLS WITH OSB EXTERIOR AND 1/2" GYP INTERIOR RESISTING INTERIOR ZONE WINDLOADS, 130 MPH, EXPOSURE C, STUD DEFLECTION LIMIT H/240 (NOT OK FOR BRITTLE FINISH). STUD SPACING SHALL BE MULTIPLIED BY 0.8 FOR FRAMING LOCATED WITHIN 4 FEET OF CORNERS FOR END ZONE LOADING. (END ZONE EXAMPLE 16" O.C. x 0.8 = 12.8" O.C.)

(1) 2x4 @ 16" OC	TO 10'-1" STUD HEIGHT
(1) 2x4 @ 12" OC	TO 11'-2" STUD HEIGHT
(1) 2x6 @ 16" OC	TO 15'-7" STUD HEIGHT
(1) 2x6 @ 12" OC	TO 17'-3" STUD HEIGHT

GRADE & SPECIES TABLE

		Fb	E
2x8	SP #2	925	1.4
2x10	SP #2	800	1.4
2x12	SP #2	750	1.4
GLB	24F-V3 SP	2600	1.9
LSL	TIMBERSTRAND	1700	1.7
LVL	MICROLAM	2950	2.0
PSL	PARALAM	2900	2.0

GENERAL NOTES:

TRUSSES: TRUSSES SHALL BE DESIGNED BY A FLORIDA LICENSED ENGINEER IN ACCORDANCE WITH THE FBCR. TRUSS ENGINEERING SHALL INCLUDE TRUSS DESIGN, PLACEMENT PLANS, TEMPORARY AND PERMANENT BRACING DETAILS, TRUSS-TO-TRUSS CONNECTIONS, AND UPLIFT AND REACTION LOADS FOR ALL BEARING LOCATIONS. TRUSS ENGINEERING IS THE RESPONSIBILITY OF THE TRUSS MANUFACTURER AND SHALL BE SIGNED & SEALED BY THE MANUFACTURER'S DESIGN ENGINEER. IT IS THE BUILDER'S RESPONSIBILITY VERIFY THE TRUSS DESIGNER FULLY SATISFIES ALL THE ABOVE REQUIREMENTS AND TO SELECT UPLIFT CONNECTIONS BASED ON TRUSS ENGINEERING UPLIFT AND PROVIDE FOOTINGS FOR INTERIOR BEARING WALLS. BUILDER IS TO FURNISH TRUSS ENGINEERING TO WIND LOAD ENGINEER FOR REVIEW OF TRUSS REACTIONS ON THE BUILDING STRUCTURE. STRAP 2X6 RAFTERS WITH MIN. UPLIFT CONNECTION 415LB EACH END; 2X8 RAFTERS 700 LB EACH END.

SITE PREPARATION: SITE ANALYSIS AND PREPARATION IS NOT PART OF THIS PLAN

FOUNDATION: CONFIRM THAT THE FOUNDATION DESIGN & SITE CONDITIONS MEET GRAVITY LOAD REQUIREMENTS (ASSUME 1500 PSF BEARING CAPACITY UNLESS VISUAL OBSERVATION OR SOILS TEST PROVES OTHERWISE)

CONCRETE: MINIMUM COMPRESSIVE STRENGTH OF CONCRETE AT 28 DAYS, F'c = 2500 PSI.

WELDED WIRE REINFORCED SLAB: 6" x 6" W1.4 x W1.4, FB = 85KSI, WELDED WIRE REINFORCEMENT FABRIC (W.W.M.) CONFORMING TO ASTM A185; LOCATED IN MIDDLE OF THE SLAB; SUPPORTED WITH APPROVED MATERIALS OR SUPPORTS AT SPACINGS NOT TO EXCEED 3'.

FIBER CONCRETE SLAB: CONCRETE SLABS ON GROUND CONTAINING SYNTHETIC FIBER REINFORCEMENT. FIBER LENGTH 1/2 INCH TO 2 INCHES. DOSAGE AMOUNTS FROM 0.75 TO 1.5 POUNDS PER CUBIC YARD PER THE MANUFACTURER'S RECOMMEDATIONS. FIBERS TO COMPLY WITH ASTM C 1116. SUPPLIER TO PROVIDE ASTM C 1116 CERTIFICATION OF COMPLIANCE WHEN REQUESTED BY BUILDING OFFICIAL.

CONTROL JOINTS: WHERE SPECIFIED, SAWN CONTROL JOINTS IN SLAB-ON-GRADE SHALL BE CUT IN ACCORDANCE WITH ACI 302. JOINTS SHALL BE CUT WITHIN 12 HOURS OF SLAB PLACEMENT. THE LENGTH / WIDTH RATIOS OF SLAB AREAS SHALL NOT EXCEED 1.5 AND TYPICAL SPACING OF CUTS TO BE 12FT. DO NOT CUT WWM OR REINFORCING STEEL. (RECOMMENDED LOCATION OF CONTROL JOINTS IS SUBJECT TO OWNER AND CONTRACTOR'S APPROVAL. THE CONTROL JOINTS ARE NOT INTENDED TO PREVENT CRACKS BUT RATHER TO ENCOURAGE THE SLAB TO CRACK ON A GIVEN LINE.)

REBAR: ASTM A 615, GRADE 40, DEFORMED BARS, FY = 40 KSI. ALL LAP SPLICES 40 * DB (25" FOR #5 BARS); UNO. ALL REINFORCEMENT SHALL BE DETAILED AND PLACED IN ACCORDANCE WITH ACI 315-96, U.N.O.

ROOF SHEATHING: ALL ROOFS ARE HORIZONTAL DIAPHRAGMS; SHEATHING, UNBLOCKED, APPLIED PERPENDICULAR TO FRAMING, OVER A MINIMUM OF 3 FRAMING MEMBERS, WITH PANEL EDGES STAGGERED.

STRUCTURAL CONNECTORS: MANUFACTURERS AND PRODUCT NUMBER FOR CONNECTORS, ANCHORS, AND REINFORCEMENT ARE LISTED FOR EXAMPLE NOT ENDORSEMENT. AN EQUIVALENT DEVICE OF THE SAME OR OTHER MANUFACTURER CAN BE SUBSTITUTED FOR ANY DEVICES LISTED IN THE EXAMPLE TABLES AS LONG AS IT MEETS THE REQUIRED LOAD CAPACITIES. MANUFACTURER'S INSTALLATION INSTRUCTIONS MUST BE FOLLOWED TO ACHIEVE RATED LOADS.

ANCHOR BOLTS: A-307 ANCHOR BOLTS WITH MINIMUM EMBEDMENT AS SPECIFIED IN DRAWINGS BUT NO LESS THAN 7" IN CONCRETE OR REINFORCED BOND BEAM OR 15" IN GROUTED CMU.

BUILDER'S RESPONSIBILITY:

THE BUILDER AND OWNER ARE RESPONSIBLE FOR THE FOLLOWING, WHICH ARE SPECIFICALLY NOT PART OF THE WIND LOAD ENGINEER'S SCOPE OF WORK.

CONFIRM SITE CONDITIONS, FOUNDATION BEARING CAPACITY, GRADE AND BACKFILL HEIGHT, WIND SPEED AND DEBRIS ZONE, AND FLOOD ZONE.

PROVIDE MATERIALS AND CONSTRUCTION TECHNIQUES, WHICH COMPLY WITH FBCR REQUIREMENTS FOR THE STATED WIND VELOCITY AND DESIGN PRESSURES.

PROVIDE A CONTINUOUS LOAD PATH FROM TRUSSES TO FOUNDATION. IF YOU BELIEVE THE PLAN OMITS A CONTINUOUS LOAD PATH CONNECTION, CALL THE WIND LOAD ENGINEER IMMEDIATELY.

VERIFY THE TRUSS MANUFACTURER'S SEALED ENGINEERING INCLUDES TRUSS DESIGN, PLACEMENT PLANS, TEMPORARY AND PERMANENT BRACING DETAILS, TRUSS-TO-TRUSS CONNECTIONS, AND UPLIFT AND REACTION LOADS FOR ALL BEARING LOCATIONS.

ROOF SYSTEM DESIGN:

THE SEAL ON THESE PLANS FOR COMPLIANCE WITH FBCR, IS BASED ON REACTIONS, UPLIFTS, AND BEARING LOCATIONS IN TRUSS ENGINEERING SUBMITTED TO THE WIND LOAD ENGINEER. IT IS THE RESPONSIBILITY OF THE BUILDER TO CHECK ALL DETAILS OF THE COMPLETE ROOF SYSTEM DESIGN SUBMITTED BY THE TRUSS MANUFACTURER AND HAVE IT SIGNED, AND SEALED BY A DESIGN PROFESSIONAL FOR CORRECT APPLICATION OF FBCR REQUIRED LOADS AND ANY SPECIAL LOADS. THE BUILDER IS RESPONSIBLE TO REVIEW EACH INDIVIDUAL TRUSS MEMBER AND THE TRUSS ROOF SYSTEM AS A WHOLE AND TO PROVIDE RESTRAINT FOR ANY LATERAL BRACING. THE BUILDER SHOULD USE CARE CHECKING THE ROOF DESIGN BECAUSE THE WIND LOAD ENGINEER IS SPECIFICALLY NOT RESPONSIBLE FOR THE TRUSS LAYOUT WHICH WAS CREATED BY THE TRUSS MANUFACTURER AND THE TRUSS DESIGNER ALSO DENIES RESPONSIBILITY FOR THE LAYOUT PER NOTES ON THEIR SEALED TRUSS SHEETS.

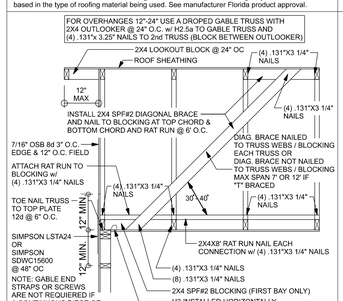

SPACE RAT RUN & DIAGONAL BRACE 6'-0" O.C. FOR GABLE HEIGHT UP TO 25'-0" 130 MPH, EXP C, ENCLOSED

(TYP.) GABLE BRACING DETAIL

WOOD FRAME

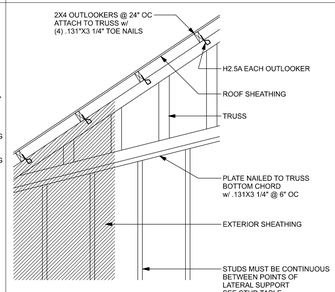

(TYP.) GABLE WALL w/ VAULTED CEILING

WOOD FRAME

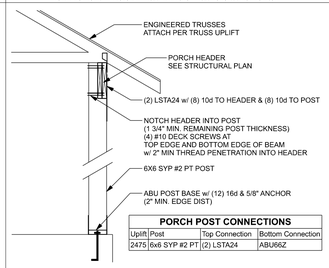

PORCH POST CONNECTIONS

Uplift	Post	Top Connection	Bottom Connection
2475	6x6 SYP #2 PT	(2) LSTA24	ABU66Z

POSTS CUT FLUSH WITHOUT NOTCH - BRACE TO PREVENT ROTATION:

EAVE / HIP ROOF:
- STRAP TRUSS w/ H2.5A OR EQUAL TO EACH SIDE OF HEADER (FRONT & BACK) USE LONGER STRAP AS NEEDED IF TOP PLATES ARE INSTALLED
- (2) LSTA24 16-10d OR (2) MTS20 14-10d ON FRONT AND REAR OF POST TO HEADER
- ATTACH HEADER TO POST w/ (8) .131" x 3.25" TOE-NAIL

GABLE END:
- EXTEND GABLE SHEATHING TO BOTTOM OF HEADER NAILED WITH 8d NAILS @ 6" MIN. INTO TRUSS BOTTOM CHORD AND INTO BEAM AT 1 1/2" FROM TOP & BOTTOM EDGE
- ATTACH HEADER TO POST w/ (8) .131" x 3.25" TOE-NAIL

(TYP.) PORCH POST

ONE STORY WOOD

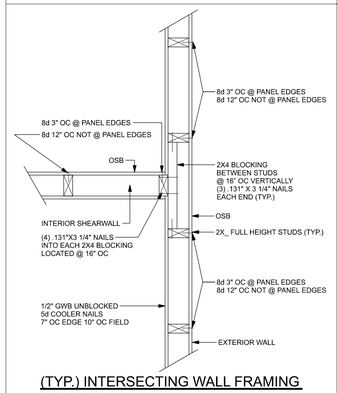

(TYP.) INTERSECTING WALL FRAMING

WOOD FRAME

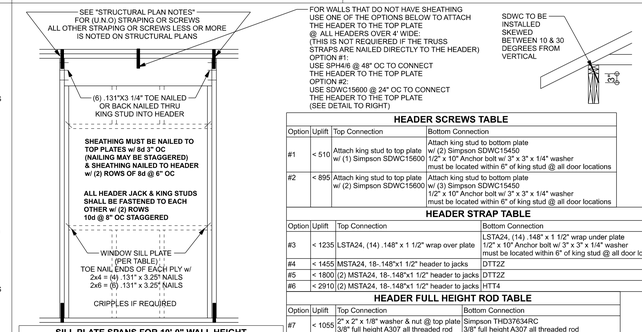

HEADER SCREWS TABLE

Option	Uplift	Top Connection	Bottom Connection
#1	< 510	Attach king stud to top plate w/ (2) Simpson SDWC15600	Attach king stud to bottom plate w/ (2) Simpson SDWC15450 1/2" x 10" Anchor bolt w/ 3" x 3" x 1/4" washer must be located within 6" of king stud @ all door locations
#2	< 895	Attach king stud to top plate w/ (2) Simpson SDWC15600	Attach king stud to bottom plate w/ (3) Simpson SDWC15450 1/2" x 10" Anchor bolt w/ 3" x 3" x 1/4" washer must be located within 6" of king stud @ all door locations

HEADER STRAP TABLE

Option	Uplift	Top Connection	Bottom Connection
#3	< 1235	LSTA24, (14) .148" x 1 1/2" wrap over plate	LSTA24, (14) .148" x 1 1/2" wrap under plate 1/2" x 10" Anchor bolt w/ 3" x 3" x 1/4" washer must be located within 6" of king stud @ all door locations
#4	< 1455	MSTA24, 18-.148"x1 1/2" header to jacks	DTT2Z
#5	< 1800	(2) MSTA24, 18-.148"x1 1/2" header to jacks	DTT2Z
#6	< 2910	(2) MSTA24, 18-.148"x1 1/2" header to jacks	HTT4

HEADER FULL HEIGHT ROD TABLE

Option	Uplift	Top Connection	Bottom Connection
#7	< 1055	2" x 2" x 1/8" washer & nut @ top plate 3/8" full height A307 all threaded rod	Simpson THD37634RC 3/8" full height A307 all threaded rod
#8	< 1575	2" x 2" x 1/8" washer & nut @ top plate 1/2" full height A307 all threaded rod	Simpson THD50934RC 1/2" full height A307 all threaded rod
#9	< 2250	2" x 2" x 1/8" washer & nut @ top plate 3/8" full height A307 all threaded rod	Simpson SET-XP epoxy (or equal) w/ 7.5" min. embedment (install per mfg. specs) 3/8" full height A307 all threaded rod

SILL PLATE SPANS FOR 10'-0" WALL HEIGHT

DESIGN WIND SPEED	MAX. SPANS FOR SPF #2			
	(1) 2x4	(2) 2x4	(1) 2x6	(2) 2x6
130 MPH EXP. C	5'-2"	7'-9"	7'-7"	11'-3"

BASED ON WFCM TABLE 3.23B FOR OTHER WALL HEIGHTS (H) SILL SPAN SHALL BE DIVIDED BY (H/10)

TYPICAL HEADER STRAPING OR SCREWS DETAIL

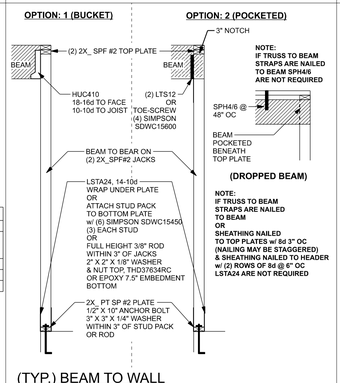

(TYP.) BEAM TO WALL

WOOD FRAME w/ STRAPS & ANCHORS

ALLOWABLE UPLIFT: 1235 LB

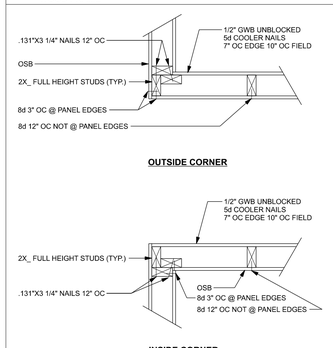

(TYP.) CORNER FRAMING

WOOD FRAME

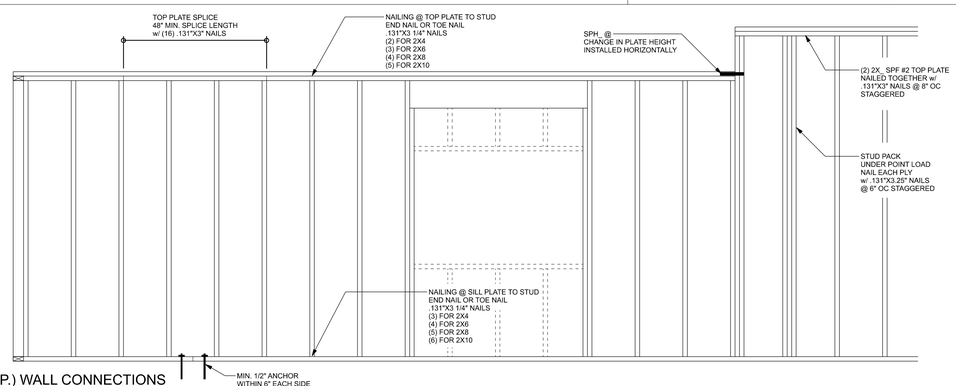
TOP PLATE SPLICE 48" MIN. SPLICE LENGTH w/ (16) .131"X3" NAILS
NAILING @ TOP PLATE TO STUD END NAIL OR TOE NAIL .131"X3 1/4" NAILS (2) FOR 2X4 (3) FOR 2X6 (4) FOR 2X8 (5) FOR 2X10
SPH @ CHANGE IN PLATE HEIGHT INSTALLED HORIZONTALLY
(2) 2X_ SPF #2 TOP PLATE NAILED TOGETHER w/ .131"X3" NAILS @ 8" OC STAGGERED
STUD PACK UNDER POINT LOAD NAIL EACH PLY w/ .131"X3.25" NAILS @

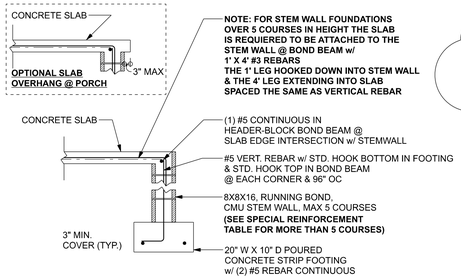

NOTE: FOR STEM WALL FOUNDATIONS OVER 5 COURSES IN HEIGHT THE SLAB IS REQUIERED TO BE ATTACHED TO THE STEM WALL @ BOND BEAM w/ 1' X 4' #3 REBARS THE 1' LEG HOOKED DOWN INTO STEM WALL & THE 4' LEG EXTENDING INTO SLAB SPACED THE SAME AS VERTICAL REBAR

F1 S-2 STEM WALL FOOTING
SCALE: 1/2" = 1'-0"

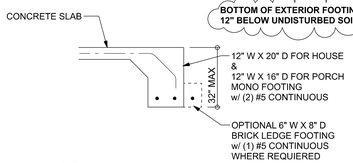

BOTTOM OF EXTERIOR FOOTINGS SHALL BE A MINIMUM OF 12" BELOW UNDISTURBED SOIL OR ENGINEERED FILL

F1 S-2 OPTIONAL MONOLITHIC FOOTING
SCALE: 1/2" = 1'-0"

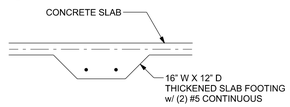

F2 S-2 INTERIOR BEARING FOOTING
SCALE: 1/2" = 1'-0"

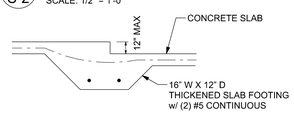

F3 S-2 INTERIOR BEARING STEP FOOTING
SCALE: 1/2" = 1'-0"

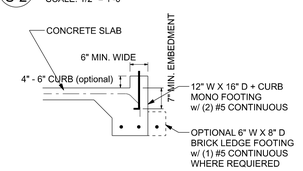

F4 S-2 OPTIONAL MONOLITHIC CURB FOOTING
SCALE: 1/2" = 1'-0"

NOTE: GARAGE DOOR OPENINGS MUST HAVE LATERAL SUPPORT (FLOOR OR PERPENDICULAR WALL.) @ TOP OF RETAINING WALL WITHIN 3'-0" OF OPENING

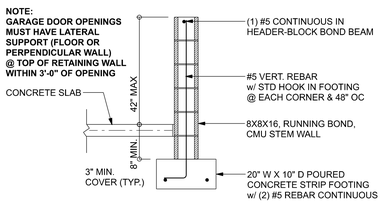

F4 S-2 STEM WALL CURB FOOTING
SCALE: 1/2" = 1'-0"

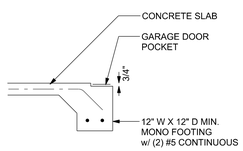

F5 S-2 GARAGE DOOR POCKET FOOTING
SCALE: 1/2" = 1'-0"

THIS FOUNDATION DESIGN IS FOR RELATIVELY FLAT GRADE ONLY. IF FOUNDATION IS ON A STEEP SLOPE THAT EXCEEDS 1' IN 12'. CONTACT ENGINEER BEFORE CONSTRUCTION FOR ADDITIONAL ENGINEERING

TALL STEM WALL TABLE:
The table assumes 40 ksi for #5 rebar and 60 ksi for #7 & #8 rebar with 6" hook in the footing and bent 24" into the reinforced slab at the top. The vertical steel is to be placed toward the tension side of the CMU wall (away from the soil pressure, within 2" of the exterior side of the wall).

STEMWALL HEIGHT (FEET)	UNBALANCED BACKFILL HEIGHT	VERTICAL REINFORCEMENT FOR 8" CMU STEMWALL (INCHES O.C.)			VERTICAL REINFORCEMENT FOR 12" CMU STEMWALL (INCHES O.C.)		
		#5	#7	#8	#5	#7	#8
3.3	3.0	96	96	96	96	96	96
4.0	3.7	96	96	96	96	96	96
4.7	4.3	88	96	96	96	96	96
5.3	5.0	56	96	96	96	96	96
6.0	5.7	40	80	96	80	96	96
6.7	6.3	32	56	80	56	96	96

MASONRY NOTE:
MASONRY CONSTRUCTION AND MATERIALS FOR THIS PROJECT SHALL CONFORM TO ALL REQUIREMENTS OF "SPECIFICATION FOR MASONRY STRUCTURES" (ACI 530.1/ASCE 6/TMS 602). THE CONTRACTOR AND MASON MUST IMMEDIATELY, BEFORE PROCEEDING, NOTIFY THE ENGINEER OF ANY CONFLICTS BETWEEN ACI 530.1-02 AND THESE DESIGN DRAWINGS. ANY EXCEPTIONS TO ACI 530.1-02 MUST BE APPROVED BY THE ENGINEER IN WRITING.

	ACI530.1-02 Section	Specific Requirements
1.4A	Compressive strength	8" block bearing walls F'm = 1500 psi
2.1	Mortar	ASTM C 270, Type N, UNO
2.2	Grout	ASTM C 476, admixtures require approval
2.3	CMU standard	ASTM C 90-02, Normal weight, Hollow, medium surface finish, 8"x8"x16" running bond and 12"x12" or 16"x16" column block
2.3	Clay brick standard	ASTM C 216-02, Grade SW, Type FBS, 5.5"x2.75"x11.5"
2.4	Reinforcing bars, #3 - #11	ASTM 615, Grade 40, Fy = 40 ksi, Lap splices min 40 bar dia. (25" for #5)
2.4F	Coating for corrosion protection	Anchors, sheet metal ties completely embedded in mortar or grout, ASTM A525, Class G60, 0.60 oz/ft2 or 304SS
2.4F	Coating for corrosion protection	Joint reinforcement in walls exposed to moisture or wire ties, anchors, sheet metal ties not completely embedded in mortar or grout, ASTM A153, Class B2, 1.50 oz/ft2 or 304SS
3.3.E.2	Pipes, conduits, and accessories	Any not shown on the project drawings require engineering approval.
3.3.E.7	Movement joints	Contractor assumes responsibility for type and location of movement joints if not detailed on project drawings.

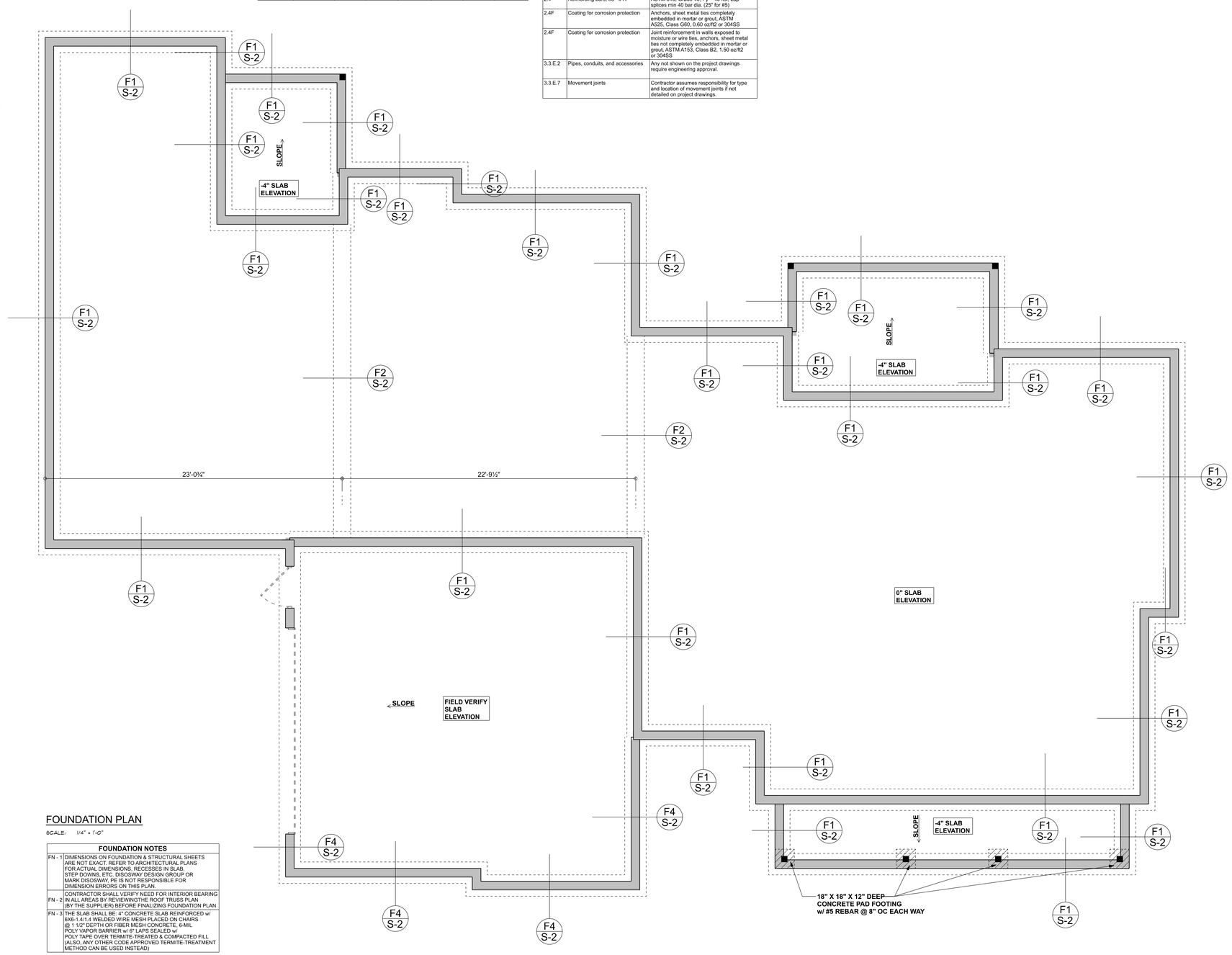

FOUNDATION PLAN
SCALE: 1/4" = 1'-0"

FOUNDATION NOTES	
FN - 1	DIMENSIONS ON FOUNDATION & STRUCTURAL SHEETS ARE NOT EXACT. REFER TO ARCHITECTURAL PLANS FOR ACTUAL DIMENSIONS, RECESSES IN SLAB, STEP DOWNS, ETC. DISOSWAY DESIGN GROUP OR MARK DISOSWAY, PE IS NOT RESPONSIBLE FOR DIMENSION ERRORS ON THIS PLAN.
FN - 2	CONTRACTOR SHALL VERIFY NEED FOR INTERIOR BEARING IN ALL AREAS BY REVIEWINGTHE ROOF TRUSS PLAN (BY THE SUPPLIER) BEFORE FINALIZING FOUNDATION PLAN
FN - 3	THE SLAB SHALL BE: 4" CONCRETE SLAB REINFORCED w/ 6X6-1.4/1.4 WELDED WIRE MESH PLACED ON CHAIRS @ 1 1/2" DEPTH OR FIBER MESH CONCRETE, 6-MIL POLY VAPOR BARRIER w/ 6" LAPS SEALED w/ POLY TAPE OVER TERMITE-TREATED & COMPACTED FILL (ALSO, ANY OTHER CODE APPROVED TERMITE-TREATMENT METHOD CAN BE USED INSTEAD)

Amira Builders

Cristelli Res.

PROJECT ADDRESS:
Parcel: 16-7S-17-10006-106,
Columbia County, FL

FL PE 53915
This item has been digitally signed and sealed by Mark Disosway PE on digital signature date. Printed copies of this document are not considered signed and sealed and the signature must be verified on any electronic copies.

MARK DISOSWAY LICENSED PE No. 53915 STATE OF FLORIDA

C=US, O=Unaffiliated, dnQualifier=A01410C000001949239A3F70003AF06, CN=Mark d Disosway
2026-07-06 16:16:53

PRINTED SIGNATURE IS NOT VALID
CLICK HERE TO VALIDATE DIGSIG

DIMENSIONS:
Stated dimensions supercede scaled dimensions. Refer all questions to Mark Disosway, P.E. for resolution. Do not proceed without clarification.

COPYRIGHTS AND PROPERTY RIGHTS:
Mark Disosway, P.E. hereby expressly reserves its common law copyrights and property right in these instruments of service. This document is not to be reproduced, altered or copied in any form or manner without first the express written permission and consent of Mark Disosway.

CERTIFICATION: I hereby certify that I have examined this plan, and that the applicable portions of the plan, relating to wind engineering comply with the 8th Edition Florida Building Code Residential (2023) to the best of my knowledge.

LIMITATION: This design is valid for one building, at specified location.

Mark Disosway P.E.
163 SW Midtown Place
Suite 103
Lake City, Florida 32025
386.754.5419
disoswaydesign@gmail.com

JOB NUMBER:
260565

S-2
OF 3 SHEETS

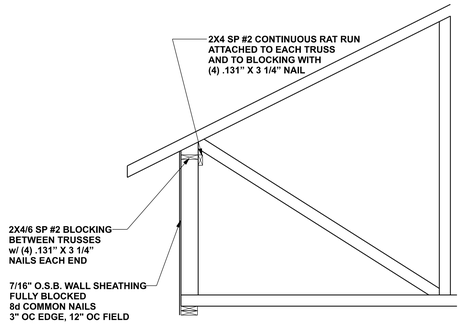

DETAIL @ TRUSSES WITH RAISED HEELS

SCALE: 1/2" = 1'-0"

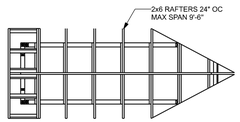

FRAMING PLAN

DORMER ROOF:
ROOFING (BY OWNER)

ROOF SHEATHING

TRUSSES / RAFTERS (SEE ROOF FRAMING PLAN FOR SIZE & SPACING) TO RIDGE BOARD (FULL DEPTH OF RAFTER CUT).

CEILING JOISTS

CEILING FINISH (BY OWNER)

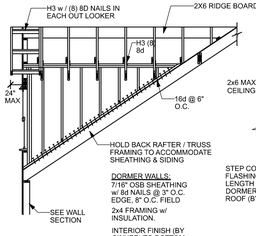

SIDE VIEW

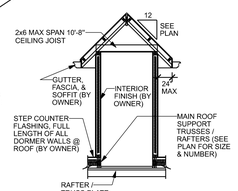

FRONT VIEW

DORMER ANCHORING DETAIL (ON ROOF)

SCALE: N.T.S.

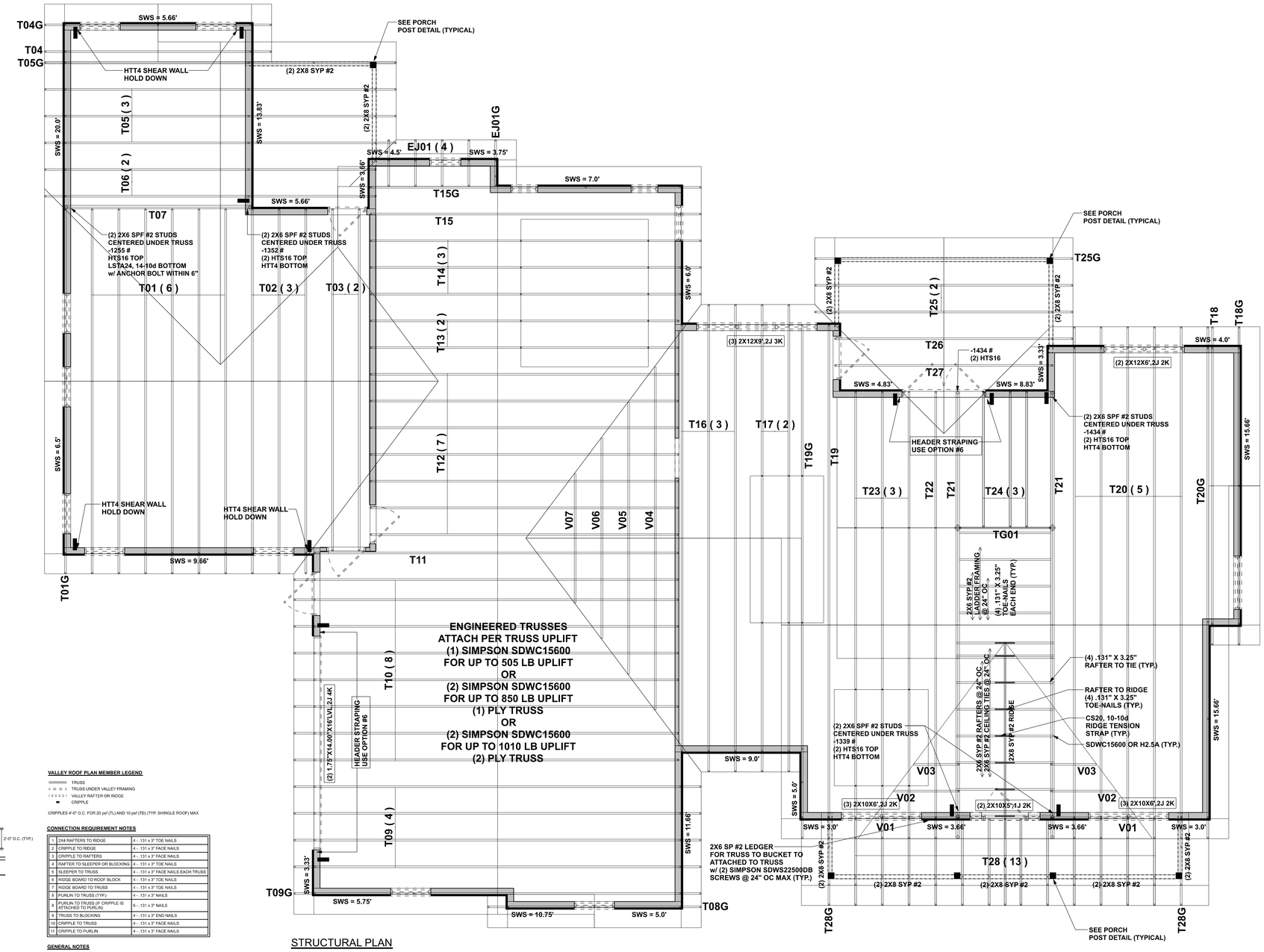

STRUCTURAL PLAN

SCALE: 1/4" = 1'-0"

LUMBER SIZE & GRADE MINUMUM REQUIREMENTS

RIDGE BOARD	2X0 SYP #2
RAFTER SPANS 20'-0" OR LESS	2X4 SYP #2
PURLINS - LATERAL BRACING	2X4 SPF #2
SLEEPERS	2X (WIDTH OF RAFTER SEAT CUT) SPF #2 OR 2 PARALLEL 2X4 SPF #2
CRIPPLES & BLOCKING	2X4 SPF #2 OR BETTER
TRUSS BELOW	SEE TRUSS DESIGN - SOUTHERN PINE MATERIAL

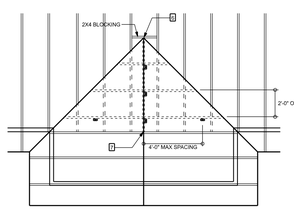

VALLEY ROOF PLAN

VALLEY ROOF PLAN MEMBER LEGEND

	TRUSS
	TRUSS UNDER VALLEY FRAMING
	VALLEY RAFTER OR RIDGE
	CRIPPLE

CRIPPLES 4'-0" O.C. FOR 20 psf (TL) AND 10 psf (TD) (TYP. SHINGLE ROOF) MAX

CONNECTION REQUIREMENT NOTES

1	2X4 RAFTERS TO RIDGE	4 - .131 x 3" TOE NAILS
2	CRIPPLE TO RIDGE	4 - .131 x 3" FACE NAILS
3	CRIPPLE TO RAFTERS	4 - .131 x 3" FACE NAILS
4	RAFTER TO SLEEPER OR BLOCKING	4 - .131 x 3" TOE NAILS
5	SLEEPER TO TRUSS	4 - .131 x 3" FACE NAILS EACH TRUSS
6	RIDGE BOARD TO ROOF BLOCK	4 - .131 x 3" TOE NAILS
7	RIDGE BOARD TO TRUSS	4 - .131 x 3" TOE NAILS
8	PURLIN TO TRUSS (TYP.)	4 - .131 x 3" NAILS
9	PURLIN TO TRUSS (IF CRIPPLE IS ATTACHED TO PURLIN)	6 - .131 x 3" NAILS
9	TRUSS TO BLOCKING	4 - .131 x 3" END NAILS
10	CRIPPLE TO TRUSS	4 - .131 x 3" FACE NAILS
11	CRIPPLE TO PURLIN	4 - .131 x 3" FACE NAILS

GENERAL NOTES

MAXIMUM RAFTER SPANS
6'-0" FOR 2X4, 9'-0" FOR 2X6 SPF #2 OR SYP #2.
MAXIMUM ROOF AREA PER SUPPORT
1892 IN ZONES 2 & 3 , 2482 IN ZONE 1. (EXAMPLE: 4'-0" O.C. X 4'-0" SPAN = 1892 OR 2'-0" X 9'-0" SPAN = 1892)
- PURLINS MAY BE OMITTED IF THE EXISTING SHEATHING IS REMOVED. PURLINS SHOULD OVERLAP SHEATHING ONE TRUSS SPACING MINIMUM. IN CASES THAT THIS IS IMPRACTICAL, OVERLAP SHEATHING A MINIMUM OF 8", AND NAIL UPWARDS THROUGH SHEATHING INTO PURLIN WITH A MINIMUM OF 8 - 8d COMMON WIRE NAILS.
THIS DRAWING APPLIES TO VALLEYS WITH THE FOLLOWING CONDITIONS:
-SPANS (DISTANCE BETWEEN HEELS) 40'-0" OR LESS
- ROOF PITCH 3 TO 8 OR 4 TO 12 OR LESS
- MAXIMUM WIND SPEED : 130 MPH
- MAXIMUM MEAN ROOF HEIGHT: 30 FEET
- MAXIMUM TOTAL LOADING: 40 psf
- MEETS FBC / ASCE 7 WIND REQUIREMENTS
- EXPOSURE CATEGORY "C" , I = 1.0, Kzt = 1.0
- ENCLOSED BUILDING

CRIPPLE, BRACING, & BLOCKING NOTES

-2X4 CONTINUOUS LATERAL BRACE (CLB) MIN. IS REQUIRED FOR CRIPPLES 5'-0" TO 10'-0" LONG NAILED w/ 2 - 10d NAILS OR 2X4 "T" OR SCAB BRACE NAILS TO FLAT EDGE OF CRIPPLE WITH 8d NAILS @ 6" O.C. "T" OR SCAB MUST BE 80% OF CRIPPLE LENGTH. CRIPPLES OVER 10'-0" LONG REQUIRE TWO CLB's OR BOTH FACES w/ "T" OR SCAB. USE STRESS DIRECTION OF SCAB PER TRUSS DESIGNER.
- NARROW EDGE OF CRIPPLE CAN FACE RIDGE OR RAFTER.
AS LONG AS THE PROPER NUMBER OF NAILS ARE INSTALLED INTO RIDGE BOARD
- INSTALL BLOCKING UNDER RAFTER IF SLEEPERS ARE NOT USED.
- INSTALL BLOCKING UNDER CRIPPLES IF CRIPPLES FALL BETWEEN LOWER TRUSS TOP CHORDS AND LATERAL BRACING IS NOT USED.
- APPLY NAILS AND NAILING PATTERNS IN ACCORDANCE TO NDS-1997 SECTION 12. NAILS ARE COMMON WIRE NAILS UNLESS NOTED OTHERWISE.

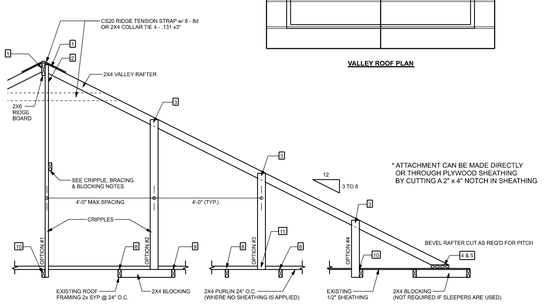

SECTION CUT PARALLEL TO VALLEY RAFTER

ROOF OVER FRAMING & BRACING DETAIL

SCALE: N.T.S

STRUCTURAL PLAN NOTES

SN-1 DIMENSIONS ON STRUCTURAL SHEETS ARE NOT EXACT. REFER TO ARCHITECTURAL FLOOR PLAN FOR ACTUAL DIMENSIONS

SN-2 PERMANENT TRUSS BRACING IS TO BE INSTALLED AT LOCATIONS AS SHOWN ON THE SEALED TRUSS DRAWINGS. LATERAL BRACING IS TO BE RESTRAINED PER BCSI1-03, BCSI-B1, BCSI-B2, & BCSI-B3. BCSI-B1, BCSI-B2, & BCSI-B3 ARE FURNISHED BY THE TRUSS SUPPLIER, WITH THE SEALED TRUSS PACKAGE

ACTUAL vs REQUIRED SHEARWALL

	TRANSVERSE	LONGITUDUNAL
ACTUAL	25111 LBF	23556 LBF
REQUIRED	21887 LBF	16989 LBF

UNLESS NOTED OTHERWISE (MINIMUM REQUIERMENTS)
*****SEE STRUCTURAL PLAN FOR ANY SPECIFIC CALL OUTS*****

BEAM / HEADERS (SIZE)	ALL LOAD BEARING FRAME WALL & PORCH HEADERS SHALL BE A MINIMUM OF (2) 2X6 SP #2 (UNO)
HEADERS (JACK & KING STUDS)	ALL LOAD BEARING FRAME WALL HEADERS SHALL HAVE (1) JACK STUD & (1) KING STUD EACH SIDE (UNO)
HEADERS (STRAPING)	ALL HEADERS w/ UPLIFT TO BE STRAPPED OR SCREWED DOWN w/ MIN. OPTION #3 (SEE DETAIL ON SHEET S-1) (U.N.O.) 1/2" X 10" ANCHOR BOLT w/ 3" X 3" X 1/4" WASHER MUST BE LOCATED WITHIN 6" OF KING STUD @ ALL DOOR LOCATIONS (U.N.O.)
JACK STUDS UNDER GIRDER TRUSS	USE ONE JACK STUD GIRDER SUPPORT PER 2000 LB LOAD

HEADER LEGEND

(2) 2X6X0',1J 1K — HEADER/BEAM CALL-OUT (U.N.O.)
- NUMBER OF KING STUDS EACH SIDE OF OPENING (FULL LENGTH)
- NUMBER OF JACK STUDS EACH SIDE OF OPENING (UNDER HEADER)
- SPAN OF HEADER
- SIZE OF HEADER MATERIAL
- NUMBER OF PLIES IN HEADER

CONNECTIONS, WALL, & HEADER DESIGN IS BASED ON REACTIONS & UPLIFTS FROM TRUSS ENGINEERING FURNISHED BY BUILDER. BUILDERS FIRST SOURCE JOB #5481028

Amira Builders

Cristelli Res.

PROJECT ADDRESS:
Parcel ID: 27-3S-16-09406,
Columbia County, FL

FL PE 53915

This item has been digitally signed and sealed by Mark Disosway PE on digital signature date. Printed copies of this document are not considered signed and sealed and the signature must be verified on any electronic copies.

MARK DISOSWAY LICENSED PE No. 53915 STATE OF FLORIDA
Mark Disosway
Digital Signature
PRINTED SIGNATURE IS NOT VALID
CLICK HERE TO VALIDATE DOCSIGN

C=US, O=Unaffiliated, dnQualifier=A01410C000001949239A3F70003AF06, CN=Mark d Disosway
2026-07-06 16:17:13

DIMENSIONS:
Stated dimensions supercede scaled dimensions. Refer all questions to Mark Disosway, P.E. for resolution. Do not proceed without clarification.

COPYRIGHTS AND PROPERTY RIGHTS:
Mark Disosway, P.E. hereby expressly reserves its common law copyrights and property right in these instruments of service. This document is not to be reproduced, altered or copied in any form or manner without first the express written permission and consent of Mark Disosway.

CERTIFICATION: I hereby certify that I have examined this plan, and that the applicable portions of the plan, relating to wind engineering comply with the 8th Edition Florida Building Code Residential (2023) to the best of my knowledge.

LIMITATION: This design is valid for one building, at specified location.

Mark Disosway P.E.
163 SW Midtown Place
Suite 103
Lake City, Florida 32025
386.754.5419
disoswaydesign@gmail.com

JOB NUMBER:
260565

S-3
OF 3 SHEETS