FBC APPROVED PRODUCTS LIST

PRODUCT CATEGORY	SUB CATEGORY	MANUFACTURER	APPROVAL No. & DATE	QA EXPIRATION DATE	MAXIMUM ULTIMATE WIND SPEED MPH: OPEN	ENCLOSED & PART. OPEN REG / VERT.	PART. ENCLOSED REG / VERT.
STRUCTURAL COMPONENTS	ROOF DECK	CAROLINA CARPORTS, INC. 26 Gauge AG Panel	FL6596.1-R7 12/12/23	04/05/27	170	170 / 167	170 / 153
STRUCTURAL COMPONENTS	STRUCTURAL WALL	CAROLINA CARPORTS, INC. 26 Gauge AG Panel	FL6702.1-R8 08/12/25	04/05/27	170	170 / 170	170 / 170
STRUCTURAL COMPONENTS	STRUCTURAL WALL	CAROLINA CARPORTS, INC. 26 Gauge Dutch Lap Wall Panel	FL6702.3-R8 08/12/25 **	04/05/27	N/A	163	143
STRUCTURAL COMPONENTS	- - - -	CRAWL SPACE DOOR SYSTEMS, INC. 16x8 Flood Vent	FL29622.1-R2 07/24/24	09/30/26	N/A	N/A	N/A
EXTERIOR DOORS	SWINGING	POCAHONTAS ALUMINUM COMPANY, INC DD 100 Insulated Side Hinged Door	FL12903.1-R8 12/31/2023	11/05/25***	N/A	122	109
EXTERIOR DOORS	SWINGING	ELIXIR DOOR AND METAL COMPANY Series 402-14	FL17996.3-R4 08/10/24	08/26/30	N/A	170	164
EXTERIOR DOORS	SWINGING	ELIXIR DOOR AND METAL COMPANY Series 407	FL17996.5-R4 08/10/24	08/19/30	N/A	170	155
EXTERIOR DOORS	ROLL-UP	CAROLINA CARPORTS, INC. Steel Roll Up Sheet Door (8' Max. Width)	FL16806.2-R6 12/13/23	04/05/27	N/A	170	170
EXTERIOR DOORS	ROLL-UP	CAROLINA CARPORTS, INC. Steel Roll Up Sheet Door - (10' Max. Width)	FL16806.4-R6 12/13/23	04/05/27	N/A	170	170
EXTERIOR DOORS	ROLL-UP	CAROLINA CARPORTS, INC. Steel Roll Up Sheet Door - (12' Max. Width)	FL16806.1-R6 12/13/23	04/05/27	N/A	170	158
EXTERIOR DOORS	ROLL-UP	CAROLINA CARPORTS, INC. Steel Roll Up Sheet Door - (16' Max. Width)	FL41335.1-R1 12/13/23	04/05/27	N/A	168	147
WINDOWS	SINGLE HUNG	CGI WINDOWS AND DOORS MODEL SH 4100A	FL23358.2-R9 08/12/25	12/31/35	N/A	170	170

NOTES:
1. DOORS AND WINDOWS SHOWN MAY BE SUBSTITUTED FOR DIFFERENT PRODUCT LINES AND/OR MODELS, PROVIDED THE FOLLOWING CONDITIONS ARE MET:
   A. PRODUCT SHALL HAVE A VALID FBC PRODUCT APPROVAL.
   B. COMPONENTS ARE INSTALLED ACCORDING TO MANUFACTURER'S INSTALLATION REQUIREMENTS.
   C. MEETS AND OR EXCEEDS THE MINIMUM DESIGN CRITERIA OF THE ABOVE APPROVED PRODUCT LIST.
2. FRAMING CONNECTIONS FOR DOOR AND WINDOW FRAMES REMAIN THE SAME FOR SUBSTITUTED PRODUCTS. HEADERS AND WINDOW RAILS MAY BE RAISED OR LOWERED AS NECESSARY TO ACCOMODATE SUBSTITUTED PRODUCT.

** MAXIMUM POST SPACING FOR DUTCH LAP IS 4.0'
*** APPROVED BY DBPR. APPROVALS BY DBPR SHALL BE REVIEWED AND RATIFIED BY THE POC AND/OR THE COMMISSION IF NECESSARY.

TABLE 1
RAFTER FRAME, END POST, GROUND ANCHOR AND PANEL FASTENER SPACING SPECIFICATIONS

RISK CATEGORY	WIND EXPOSURE CATEGORY	ULTIMATE WIND SPEED (MPH)	NOMINAL WIND SPEED (MPH)	MAXIMUM POST / RAFTER SPACING (FEET)	AVERAGE FASTENER SPACING ON-CENTERS ALONG RAFTERS OR PURLINS, AND POSTS OR GIRTS (INCHES): INTERIOR POSTS/RAFTERS	END POSTS/RAFTERS
I	B or C	110 TO 150	89 TO 116	5.0	6	6
		151 TO 170	117 TO 132	4.0	6	6

NOTES: 1. Specifications applicable to 26 gauge metal roof and wall panels fastened directly to 12 or 14 gauge steel tube framing, or 18 gauge hat channel roof purlins.
2. Specifications applicable only for mean roof height of 20 feet or less, and roof slopes of 7° to 27° (1.5:12 to 6:12 pitch). Spacing requirements for other roof heights and/or slopes may vary.

GROUND ANCHOR SCHEDULE

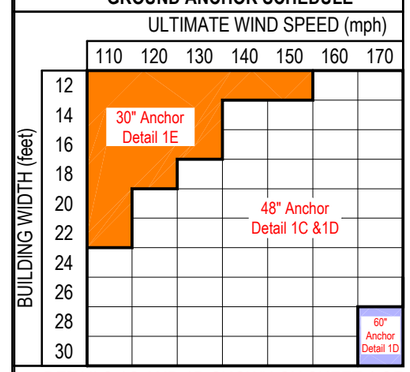

DETAILS 1C AND 1D SHOWN ON SHEET 4 OF 6

METAL CARPORT INSTALLATION PLANS AND DETAILS AND FRAMING AND FASTENER SPECIFICATIONS

FOR CONSTRUCTION IN THE STATE OF FLORIDA

PREPARED FOR:
CAROLINA CARPORTS, INC.
P.O. BOX 1263
DOBSON, NORTH CAROLINA 27017

PREPARED BY:
BECHTOL ENGINEERING AND TESTING, INC.
605 WEST NEW YORK AVENUE
DELAND, FLORIDA 32720
Certificate of Authorization No. 00005492

THIS IS TO CERTIFY THAT THE CALCULATIONS AND SPECIFICATIONS HEREIN HAVE BEEN PREPARED BY THE UNDERSIGNED PROFESSIONAL ENGINEER, AND ARE IN ACCORDANCE WITH THE REQUIREMENTS OF SECTION 1609 OF THE FLORIDA BUILDING CODE, EIGHTH EDITION (2023).

Columbia County Building Department
Plans Reviewed for Code Compliance
State of Florida

GENERAL NOTES:

1. THESE PLANS PERTAIN ONLY TO THE STRUCTURE, INCLUDING MAIN WIND FORCE RESISTING SYSTEM, COMPONENTS AND CLADDING, AND BASE RAIL ANCHORAGE. OTHER DESIGN ISSUES, INCLUDING BUT NOT LIMITED TO PLUMBING, ELECTRICAL, INGRESS/EGRESS, PROPERTY SET-BACKS, FINISH FLOOR ELEVATION AND SLOPE, OR OTHER LOCAL ZONING REQUIREMENTS ARE THE RESPONSIBILITY OF OTHERS.
2. THESE STRUCTURES ARE DESIGNED AS NON-HABITABLE UTILITY/STORAGE BUILDINGS **(RISK CATEGORY I ONLY)** CAPABLE OF SUPPORTING DEAD LOAD OF THE STRUCTURE AND APPLICABLE LIVE AND WIND LOADS. IMPROVEMENTS NOT SPECIFICALLY ADDRESSED HEREIN, INCLUDING DOORS, WINDOWS, OR OTHER COMPONENTS NOT LISTED IN THE FBC APPROVED PRODUCTS LIST (THIS SHEET), AND NOT PROVIDED AND INSTALLED BY CAROLINA CARPORTS, INC., WHICH EXERT ADDITIONAL LOADS ON THE STRUCTURE **SHALL BE AT THE OWNER'S RISK**. BECHTOL ENGINEERING AND TESTING, INC., SHALL NOT BE RESPONSIBLE FOR STRUCTURAL DAMAGE OR FAILURE DUE TO THE APPLICATION OF ADDITIONAL LOADS.
3. ALL STEEL TUBING SHALL BE 50 KSI GALVANIZED STEEL. ALL FASTENERS SHALL BE GALVANIZED OR STAINLESS STEEL OR ZINC PLATED.
4. ALL COMPONENTS AND CLADDING SHALL BE INSTALLED ACCORDING TO MANUFACTURER'S INSTALLATION INSTRUCTIONS, AND SHALL MEET THE DESIGN PRESSURES REQUIRED BY THE FLORIDA BUILDING CODE EIGHTH EDITION (FBC) AT THE LOCATION OF THE BUILDING WITHIN THE STATE OF FLORIDA.
5. ALL FIELD FRAMING CONNECTIONS SHALL BE #12-14 x 3/4" SELF DRILLING SCREWS WITHOUT CONTROL SEAL WASHER. ALL SHOP FRAMING CONNECTIONS SHALL BE WELDED.
6. CONCRETE SHALL HAVE A MINIMUM COMPRESSIVE STRENGTH OF 2500 PSI AT 28 DAYS. THE REINFORCING STEEL SHALL BE MINIMUM GRADE 40. CONCRETE SLAB FOUNDATIONS SHALL BE REINFORCED WITH 6x6-W1.4xW1.4 WELDED WIRE FABRIC COMPLYING WITH ASTM A 185, OR WITH SYNTHETIC FIBER REINFORCEMENT COMPLYING WITH ASTM C1116.
7. BASE RAIL GROUND ANCHOR REQUIREMENTS: ONE WITHIN 6" OF EVERY POST LOCATION, AND BOTH SIDES OF OPENINGS WHERE BASE RAIL IS ABSENT. GROUND ANCHORS ARE NOT REQUIRED FOR CONCRETE FOOTING AND/OR CONCRETE SLAB CONSTRUCTION. SEE GROUND ANCHOR SCHEDULE (THIS SHEET) FOR SPECIFIC GROUND ANCHOR SIZE REQUIREMENTS.
8. CONCRETE ANCHORS SHALL BE TAPCON REDHEAD LDT 1/2" x 5" OR EQUIVALENT.
9. POST/RAFTER BRACING: BRACE ON EVERY POST/RAFTER CONNECTION, EXCEPT FOR END WALLS.
10. SLAB FOUNDATION SUBGRADE SOILS SHALL BE TERMITE TREATED AND COVERED WITH 6 MIL VAPOR RETARDER PER SECTION R318.1 OF THE FLORIDA BUILDING CODE EIGHTH EDITION (2023) - RESIDENTIAL, AND SECTION 1816.1 OF THE FLORIDA BUILDING CODE EIGHTH EDITION (2023) - BUILDING. SOIL LOAD BEARING PRESSURE OF 2000PSF IS ASSUMED.
11. 14 GA FRAMING: 2-1/2" x 2-1/2" TUBE STEEL (TS) WITH 2-1/4" x 2-1/4" TS NIPPLES.
    12 GA FRAMING: 2-1/4" x 2-1/4" TS WITH 2" x 2" TS NIPPLES.
12. FOR CONTINUOUS REINFORCING, MINIMUM BAR OVERLAP SHALL BE 40 BARS DIAMETERS (25" FOR #5 REBAR).
13. TORNADO VELOCITY COMPLIANCE IS NOT REQUIRED FOR RISK I OR RISK II STRUCTURES PER SECTION R301.2.1.1 OF THE FLORIDA BUILDING CODE EIGHTH EDITION (2023)- RESIDENTIAL AND SECTION 1603.1.4 OF THE FLORIDA BUILDING CODE EIGHTH EDITION (2023) - BUILDING, AND ASCE 7-22.
14. ENCLOSED AREAS REQUIRING FLOOD OPENINGS MUST HAVE A MINIMUM OF TWO (2) OPENINGS ON EXTERIOR WALLS. OPENINGS SHOULD BE INSTALLED ON AT LEAST TWO (2) SIDES OF ENCLOSED AREA, WITH BASE OF OPENINGS SET WITHIN 1-FOOT OF THE HIGHER OF INTERIOR OR EXTERIOR GRADE. REQUIRED TOTAL NUMBER OF FLOOD VENTS NOTED IN THE FBC APPROVED PRODUCTS LIST SHALL BE BASED ON ONE (1) FLOOD VENT PER EVERY 305 SQUARE FEET OF ENCLOSED AREA. SEE TYPICAL FLOOD VENT FRAMING PLAN, SHEET 6 OF 6.

LOVE B PATEL LICENSE No. 90753 STATE OF FLORIDA PROFESSIONAL ENGINEER

This item has been digitally signed and sealed by Love B. Patel, P.E. on the date adjacent to the seal. Printed copies of this document are not considered signed and sealed, and the signature must be verified on any electronic copies.

Love B Patel
2026.01.07
11:14:09 -05'00'

BECHTOL ENGINEERING AND TESTING, INC.

PLEASE NOTE: PLANS EXPIRE MIDNIGHT 09/30/2026

CAROLINA CARPORTS, INC.
GENERIC PLANS FOR USE IN THE STATE OF FLORIDA UP TO 30' WIDE AND RISK CATEGORY I ONLY

BECHTOL ENGINEERING AND TESTING, inc.
CONSULTING GEOTECHNICAL, ENVIRONMENTAL, AND MATERIALS TESTING ENGINEERS
Certificate of Authorization No. 00005492

REVISED:		DATE:	1/2/2025
DRAWN:	CS	SCALE:	NTS
CHECKED:	CS / ID	PROJ. NO.:	G25001
APPROVED:	TB / LP / ID		SHEET 1 OF 6

BOW FRAME RAFTER OPEN CARPORT - HORIZONTAL ROOF

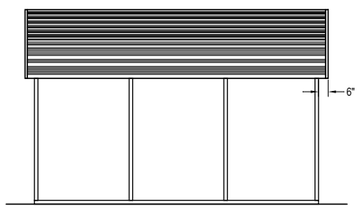

TYPICAL SIDE ELEVATION
NOT TO SCALE

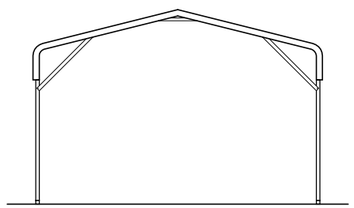

TYPICAL END ELEVATION
NOT TO SCALE

BOW FRAME RAFTER ENCLOSED BUILDING - HORIZONTAL ROOF

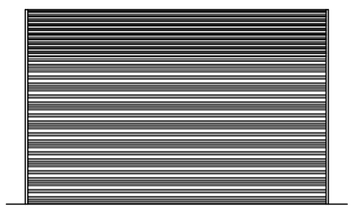

TYPICAL SIDE ELEVATION
NOT TO SCALE

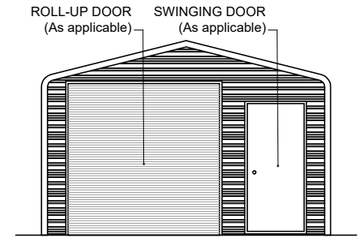

TYPICAL END ELEVATION
NOT TO SCALE

BOW FRAME RAFTER PARTIALLY OPEN / ENCLOSED BUILDING - HORIZONTAL ROOF

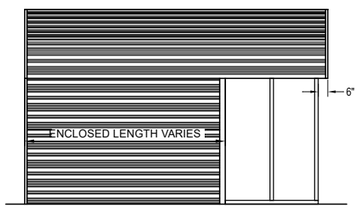

TYPICAL SIDE ELEVATION
NOT TO SCALE

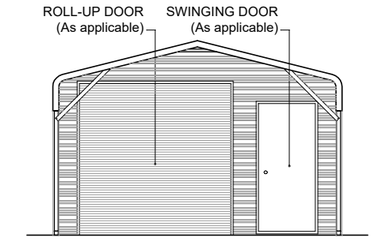

TYPICAL END ELEVATION
NOT TO SCALE

BOX EAVE FRAME RAFTER OPEN CARPORT - HORIZONTAL ROOF

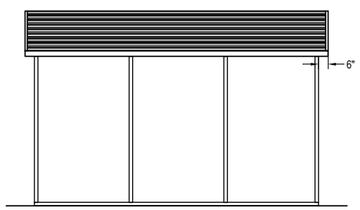

TYPICAL SIDE ELEVATION
NOT TO SCALE

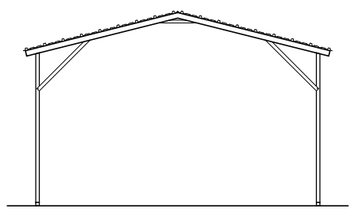

TYPICAL END ELEVATION
NOT TO SCALE

BOX EAVE FRAME RAFTER ENCLOSED BUILDING - HORIZONTAL ROOF

TYPICAL SIDE ELEVATION
NOT TO SCALE

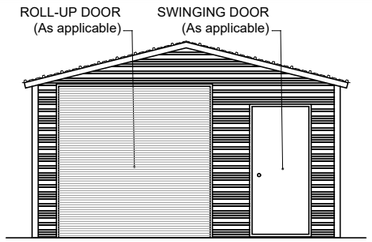

TYPICAL END ELEVATION
NOT TO SCALE

BOX EAVE FRAME RAFTER PARTIALLY OPEN / ENCLOSED BUILDING - HORIZONTAL ROOF

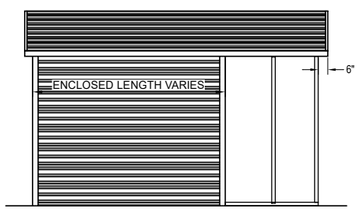

TYPICAL SIDE ELEVATION
NOT TO SCALE

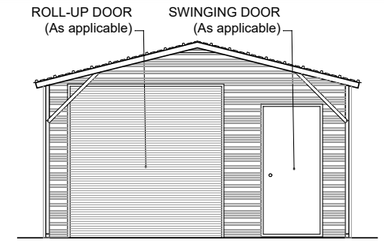

TYPICAL END ELEVATION
NOT TO SCALE

BOX EAVE FRAME RAFTER OPEN CARPORT - VERTICAL ROOF

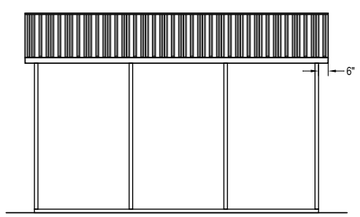

TYPICAL SIDE ELEVATION
NOT TO SCALE

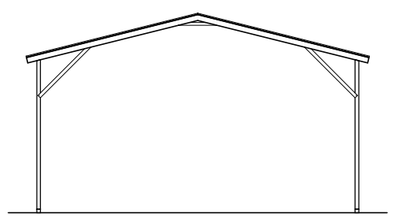

TYPICAL END ELEVATION
NOT TO SCALE

BOX EAVE FRAME RAFTER ENCLOSED BUILDING - VERTICAL ROOF

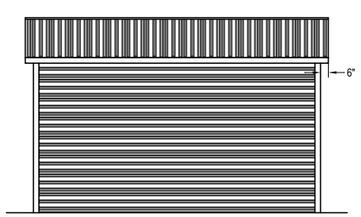

TYPICAL SIDE ELEVATION
NOT TO SCALE

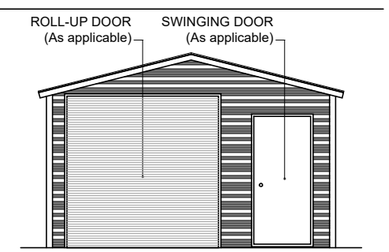

TYPICAL END ELEVATION
NOT TO SCALE

BOX EAVE FRAME RAFTER PARTIALLY OPEN / ENCLOSED BUILDING - VERTICAL ROOF

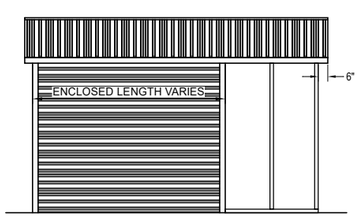

TYPICAL SIDE ELEVATION
NOT TO SCALE

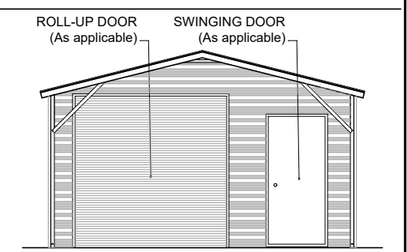

TYPICAL END ELEVATION
NOT TO SCALE

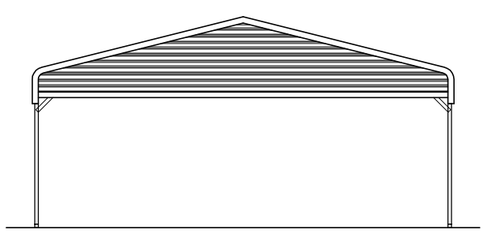

TYPICAL BOW RAFTER GABLE END ELEVATION
NOT TO SCALE

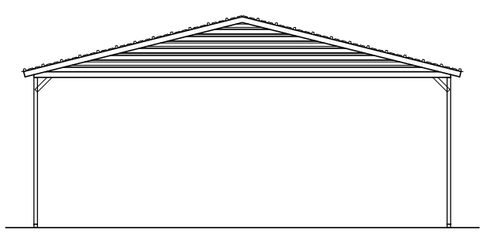

TYPICAL BOX EAVE RAFTER GABLE END ELEVATION
HORIZONTAL ROOF
NOT TO SCALE

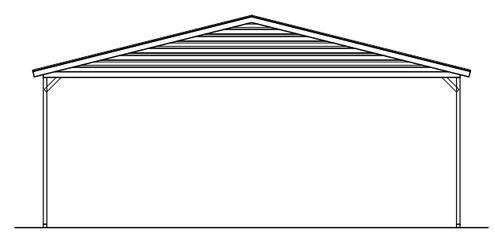

TYPICAL BOX EAVE RAFTER GABLE END ELEVATION
VERTICAL ROOF
NOT TO SCALE

LOVE B PATEL LICENSE No. 90753 STATE OF FLORIDA PROFESSIONAL ENGINEER

This item has been digitally signed and sealed by Love B. Patel, P.E. on the date adjacent to the seal. Printed copies of this document are not considered signed and sealed, and the signature must be verified on any electronic copies.

Love B Patel
2026.01.07
11:14:24 -05'00'

BECHTOL ENGINEERING AND TESTING, INC.

PLEASE NOTE: PLANS EXPIRE MIDNIGHT 09/30/2026

CAROLINA CARPORTS, INC.

GENERIC PLANS FOR USE IN THE STATE OF FLORIDA UP TO 30' WIDE AND RISK CATEGORY I ONLY

BECHTOL ENGINEERING AND TESTING, inc.
CONSULTING GEOTECHNICAL, ENVIRONMENTAL, AND MATERIALS TESTING ENGINEERS
Certificate of Authorization No. 00005492

REVISED:		DATE:	1/2/2025
DRAWN:	CS	SCALE:	NTS
CHECKED:	CS / ID	PROJ. NO.:	G25001
APPROVED:	TB / LP / ID		SHEET 2 OF 6

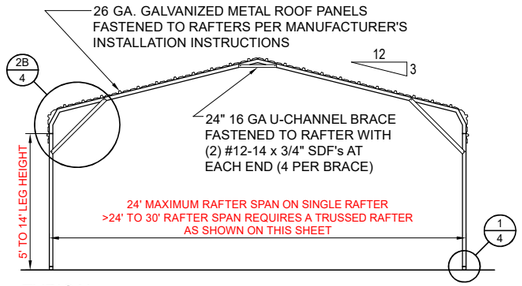

TYPICAL
INTERIOR POST/RAFTER FRAME SECTION - BOW FRAME
NOT TO SCALE

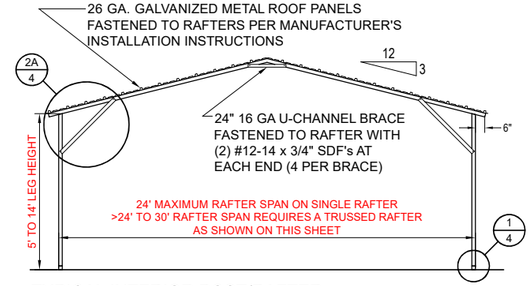

TYPICAL INTERIOR POST/RAFTER
FRAME SECTION - HORIZONTAL ROOF - BOX EAVE
NOT TO SCALE

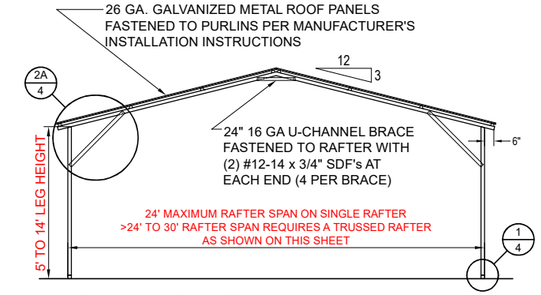

TYPICAL INTERIOR POST/RAFTER
FRAME SECTION - VERTICAL ROOF -BOX EAVE
NOT TO SCALE

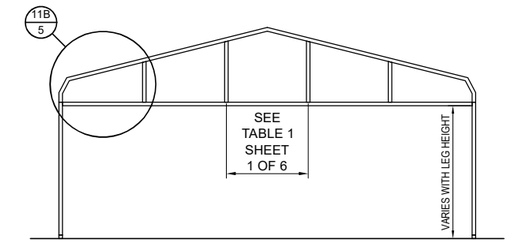

TYPICAL BOW RAFTER GABLE END FRAMING PLAN
NOT TO SCALE

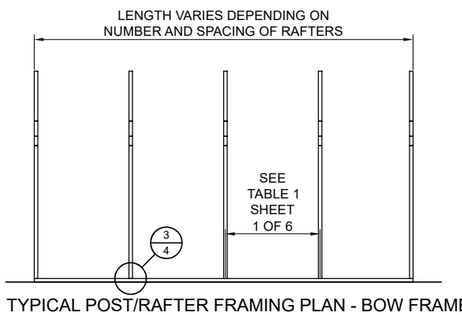

TYPICAL POST/RAFTER FRAMING PLAN - BOW FRAME
NOT TO SCALE

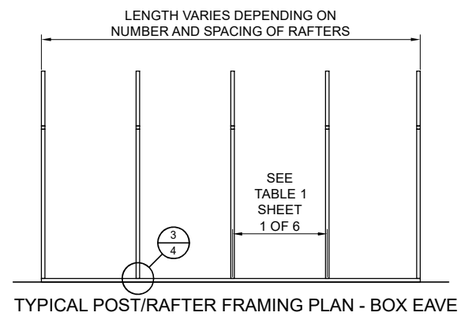

TYPICAL POST/RAFTER FRAMING PLAN - BOX EAVE
NOT TO SCALE

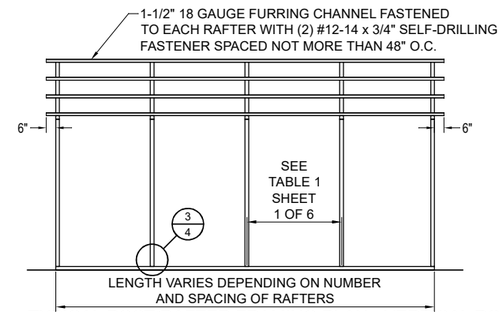

TYPICAL POST/RAFTER FRAMING PLAN - VERTICAL ROOF
NOT TO SCALE

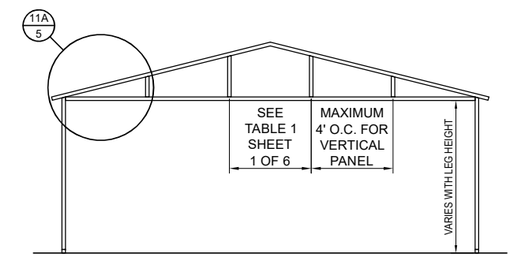

TYPICAL BOX EAVE RAFTER GABLE END FRAMING PLAN
NOT TO SCALE

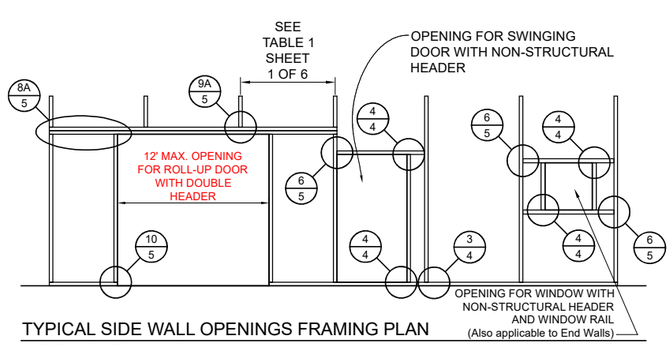

TYPICAL SIDE WALL OPENINGS FRAMING PLAN
NOT TO SCALE

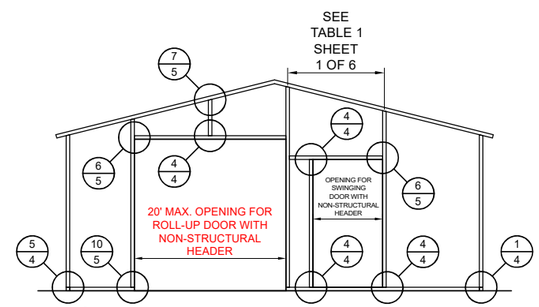

TYPICAL
END WALL OPENINGS POST/RAFTER FRAMING PLAN
NOT TO SCALE

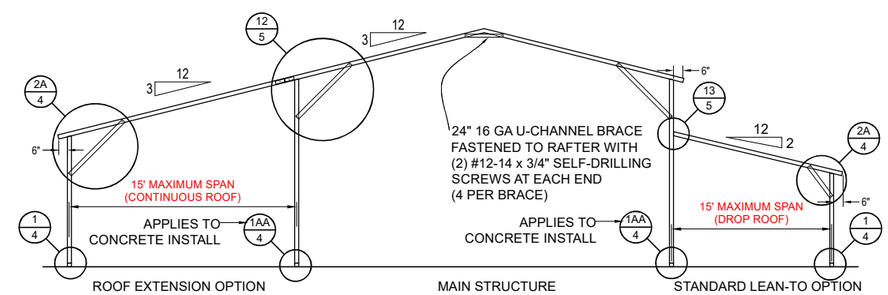

TYPICAL LEAN-TO OPTIONS FRAMING PLAN (BOTH OPTIONS SHOWN)
NOT TO SCALE (BOX EAVE RAFTER SHOWN, ONLY STANDARD LEAN-TO IS APPLICABLE TO BOW FRAME RAFTER)

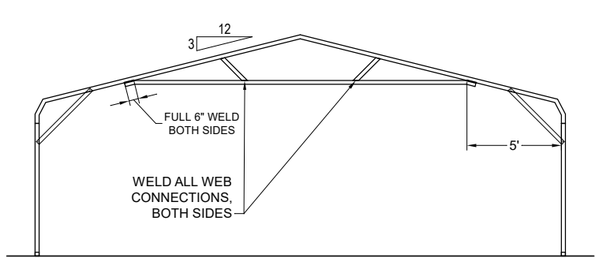

OPTIONAL 24'-1" TO 30' TRUSSED RAFTER - BOW
NOT TO SCALE

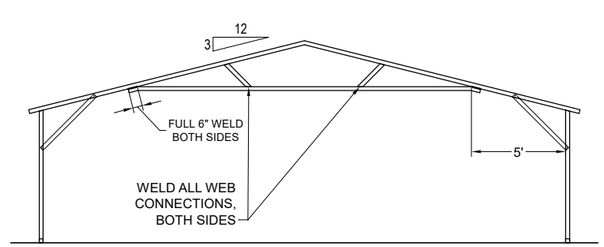

OPTIONAL 24'-1" TO 30' TRUSSED RAFTER - BOX EAVE
NOT TO SCALE

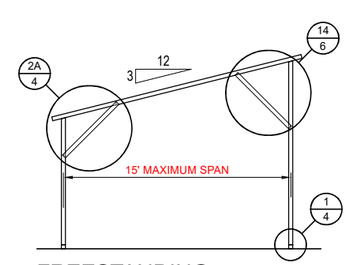

FREESTANDING
LEAN-TO FRAMING PLAN
NOT TO SCALE

LOVE B PATEL LICENSE No. 90753 STATE OF FLORIDA PROFESSIONAL ENGINEER

This item has been digitally signed and sealed by Love B. Patel, P.E. on the date adjacent to the seal. Printed copies of this document are not considered signed and sealed, and the signature must be verified on any electronic copies.

Love B Patel
2026.01.07
11:14:34 -05'00'

BECHTOL ENGINEERING AND TESTING, INC.

PLEASE NOTE: PLANS EXPIRE MIDNIGHT 09/30/2026

CAROLINA CARPORTS, INC.

GENERIC PLANS FOR USE IN THE STATE OF FLORIDA UP TO 30' WIDE AND RISK CATEGORY I ONLY

BECHTOL ENGINEERING AND TESTING, Inc.
CONSULTING GEOTECHNICAL, ENVIRONMENTAL, AND MATERIALS TESTING ENGINEERS
Certificate of Authorization No. 00005492

REVISED:		DATE:	1/2/2025
DRAWN:	CS	SCALE:	NTS
CHECKED:	CS / ID	PROJ. NO.:	G25001
APPROVED:	TB / LP / ID		SHEET 3 OF 6

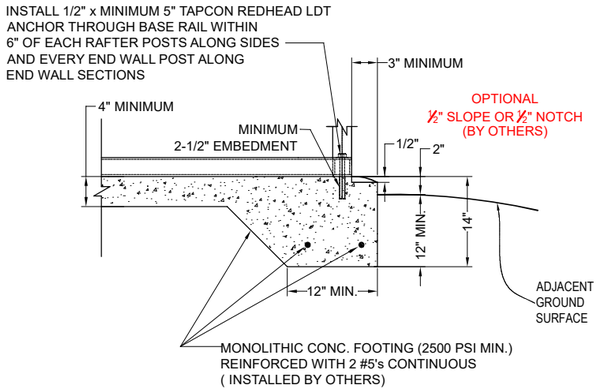

1A CONCRETE BASE RAIL ANCHORAGE
Not To Scale

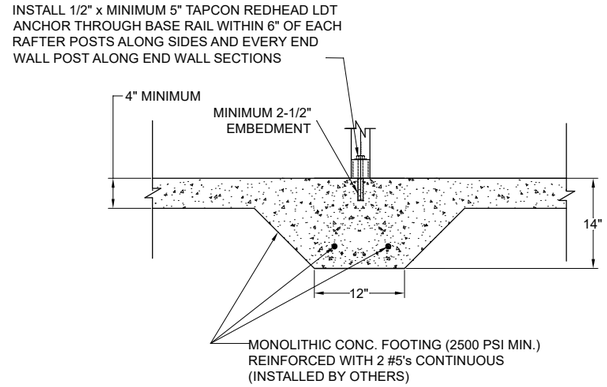

1AA THICKENED MONOLITHIC CONCRETE BASE RAIL ANCHORAGE FOR SHARED POST
Not To Scale

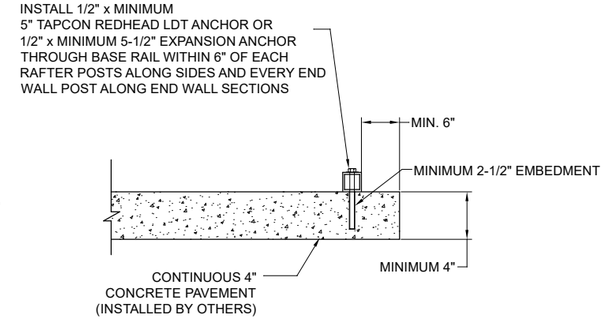

1B CONCRETE BASE RAIL ANCHORAGE
Not To Scale (OPTIONAL - OPEN CARPORTS ONLY)

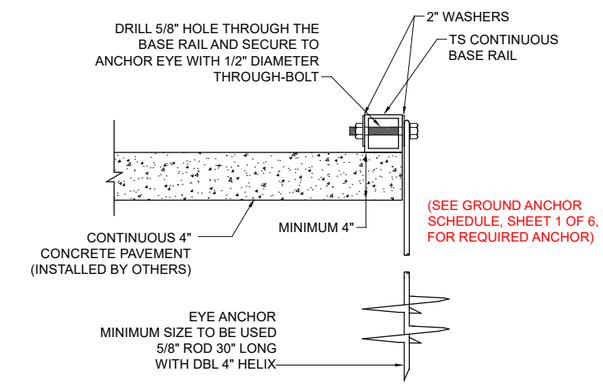

1C CONCRETE BASE RAIL ANCHORAGE
Not To Scale (ALSO UTILIZE WHERE SLAB EDGE DISTANCE DOES NOT MEET MINIMUM EDGE DISTANCE SHOWN IN DETAIL 1B AND/ OR THERE IS NO SUITABLE FOOTER)

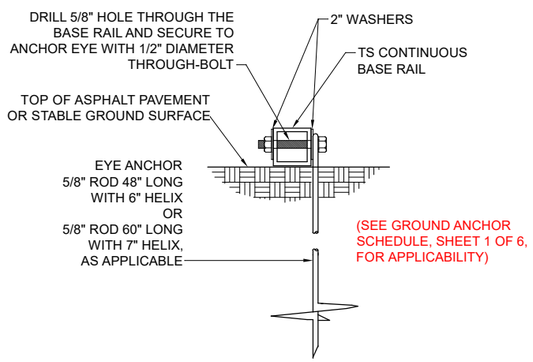

1D BASE RAIL DEEP ANCHORAGE
Not To Scale

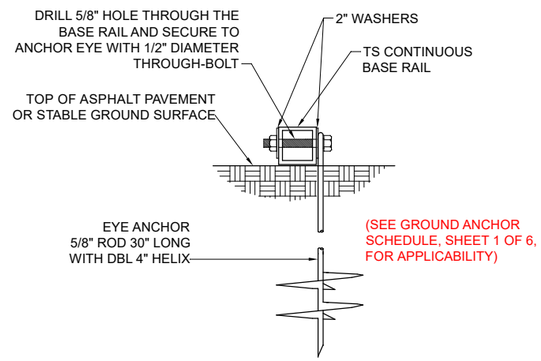

1E BASE RAIL ANCHORAGE
Not To Scale

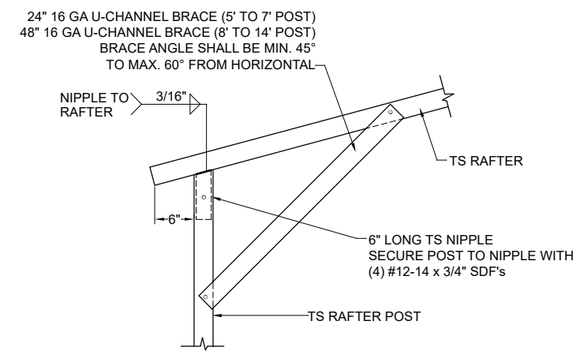

2A BOX EAVE RAFTER/POST DETAIL
Not To Scale

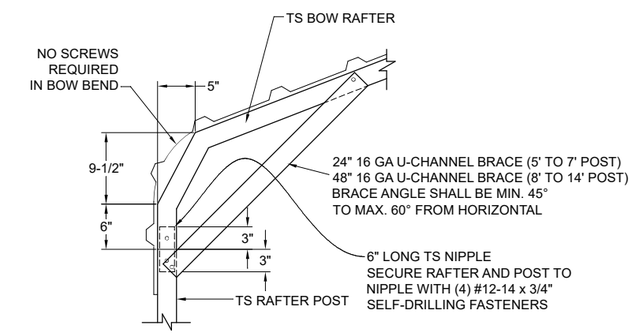

2B BOW RAFTER/POST DETAIL
Not To Scale

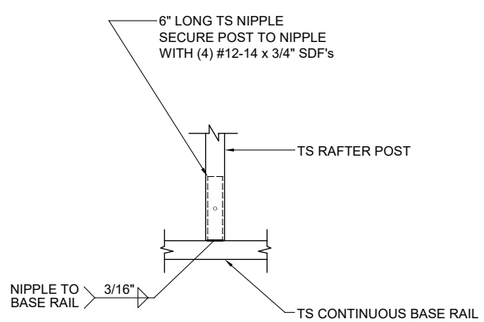

3 POST/BASE RAIL CONN. DETAIL
Not To Scale

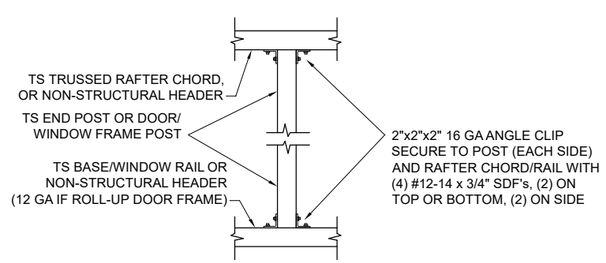

4 POST TO RAIL, TRUSS CHORD, OR NON-STRUCTURAL HEADER CONN. DETAIL
Not To Scale

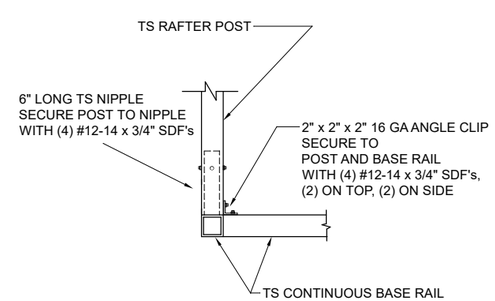

5 END POST/BASE RAIL CONN.
Not To Scale

LOVE B PATEL LICENSE No. 90753 STATE OF FLORIDA PROFESSIONAL ENGINEER

This item has been digitally signed and sealed by Love B. Patel, P.E. on the date adjacent to the seal. Printed copies of this document are not considered signed and sealed, and the signature must be verified on any electronic copies.

Love B Patel
2026.01.07
11:14:43 -05'00'

BECHTOL ENGINEERING AND TESTING, INC.

PLEASE NOTE: PLANS EXPIRE MIDNIGHT 09/30/2026

CAROLINA CARPORTS, INC.

GENERIC PLANS FOR USE IN THE STATE OF FLORIDA UP TO 30' WIDE AND RISK CATEGORY I ONLY

BECHTOL ENGINEERING AND TESTING, inc.
CONSULTING GEOTECHNICAL, ENVIRONMENTAL, AND MATERIALS TESTING ENGINEERS
Certificate of Authorization No. 00005492

REVISED:		DATE:	1/2/2025
DRAWN:	CS	SCALE:	NTS
CHECKED:	CS / ID	PROJ. NO.:	G25001
APPROVED:	TB / LP / ID		SHEET 4 OF 6

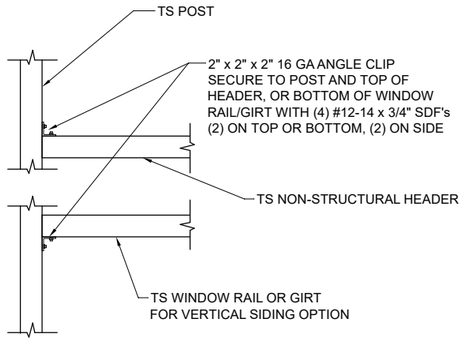

6 NON-STRUCTURAL HEADER, WINDOW RAIL, OR GIRT TO POST CONN. DETAIL
Not To Scale

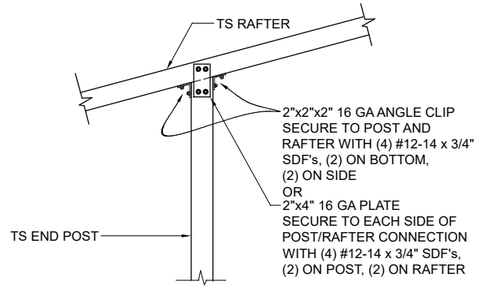

7 END POST/RAFTER CONN. DETAIL
Not To Scale

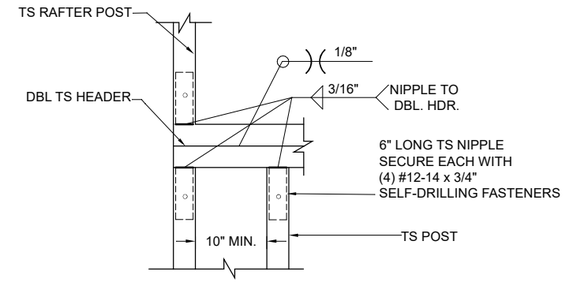

8A RAFTER POST/DBL. HEADER DETAIL
Not To Scale

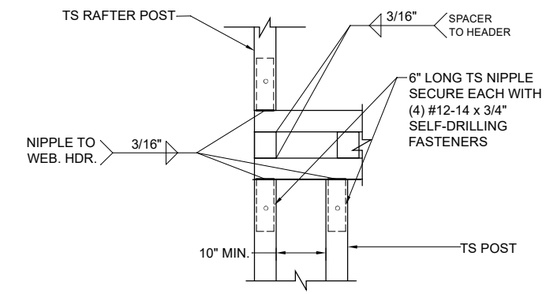

8B RAFTER POST/WEB HEADER DETAIL
Not To Scale

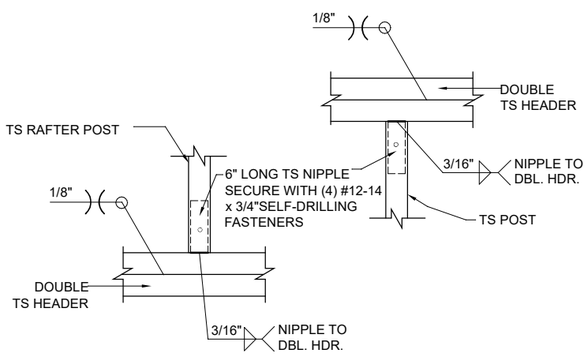

9A DBL. HEADER TO RAFTER POST DETAIL
Not To Scale

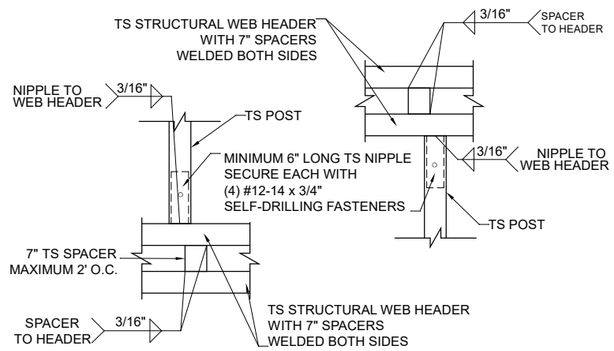

9B STRUCTURAL HEADER TO POST CONNECTION DETAIL
Not To Scale

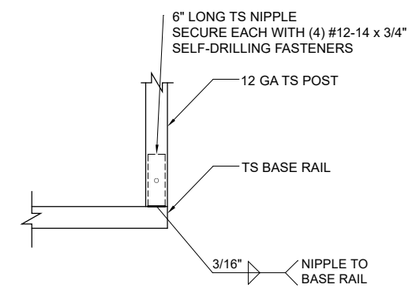

10 FRAMEOUT/ ROLL UP POST / BASE RAIL CONN. DETAIL
Not To Scale

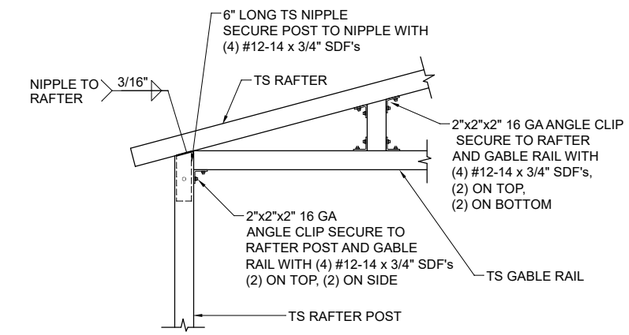

11A GABLE RAIL TO RAFTER POST CONNECTION DETAIL - BOX EAVE
Not To Scale

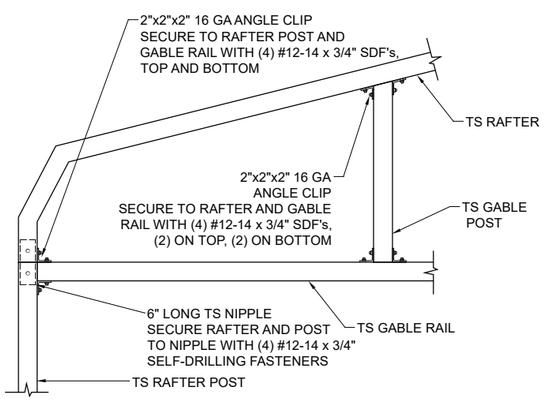

11B GABLE RAIL TO RAFTER POST CONNECTION DETAIL - BOW FRAME
Not To Scale

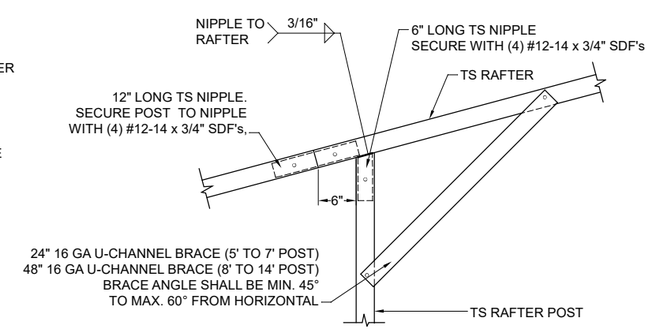

12 SIDE EXTENSION RAFTER/POST DETAIL
Not To Scale

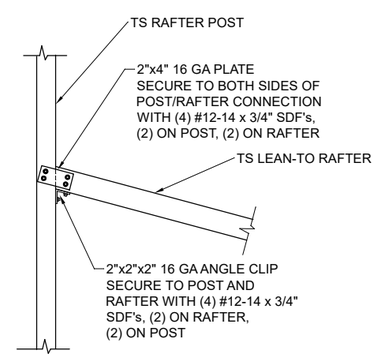

13 POST / LEAN-TO RAFTER CONN. DETAIL
Not To Scale

LOVE B PATEL LICENSE No. 90753 STATE OF FLORIDA PROFESSIONAL ENGINEER

This item has been digitally signed and sealed by Love B. Patel, P.E. on the date adjacent to the seal. Printed copies of this document are not considered signed and sealed, and the signature must be verified on any electronic copies.

Love B Patel
2026.01.07
11:14:55 -05'00'

BECHTOL ENGINEERING AND TESTING, INC.
PLEASE NOTE: PLANS EXPIRE MIDNIGHT 09/30/2026

CAROLINA CARPORTS, INC.

GENERIC PLANS FOR USE IN THE STATE OF FLORIDA UP TO 30' WIDE AND RISK CATEGORY I ONLY

BECHTOL ENGINEERING AND TESTING, Inc.
CONSULTING GEOTECHNICAL, ENVIRONMENTAL, AND MATERIALS TESTING ENGINEERS
Certificate of Authorization No. 00005492

REVISED:		DATE:	1/2/2025
DRAWN:	CS	SCALE:	NTS
CHECKED:	CS / ID	PROJ. NO.:	G25001
APPROVED:	TB / LP / ID		SHEET 5 OF 6

VERTICAL SIDE OPTION

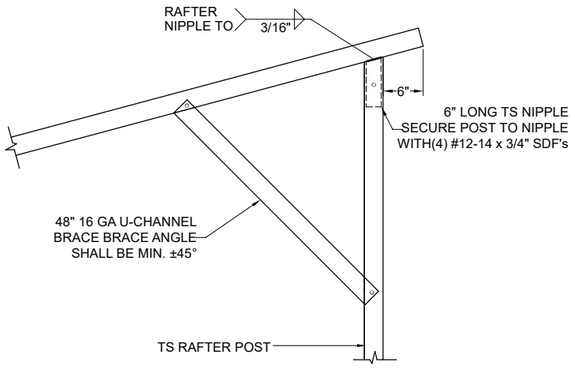

14 FREE-STANDING LEAN-TO TRUSSED
Not To Scale

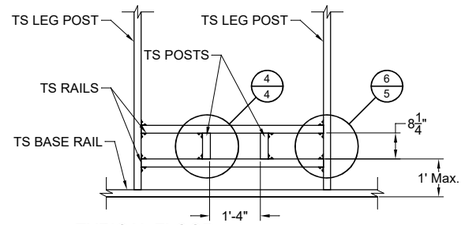

TYPICAL FLOOD VENT FRAMING PLAN
NOT TO SCALE

SEE GENERAL NOTE No. 14, SHEET 1 OF 6.

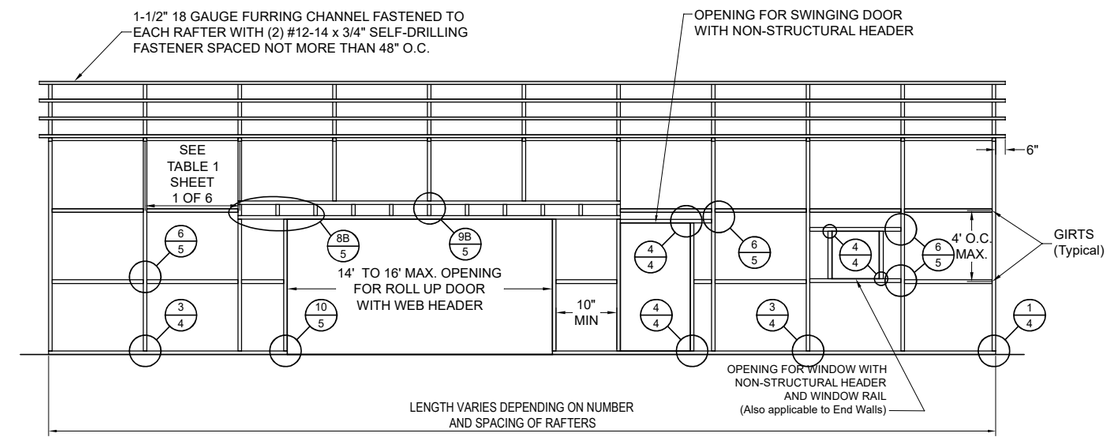

TYPICAL POST/RAFTER/GIRT FRAMING PLAN (14' TO 16' WIDE MAX. OPENING)
NOT TO SCALE

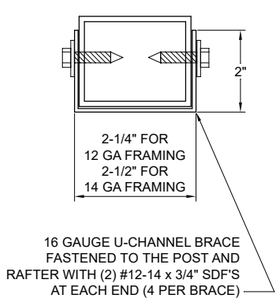

BRACE SECTION
Not To Scale

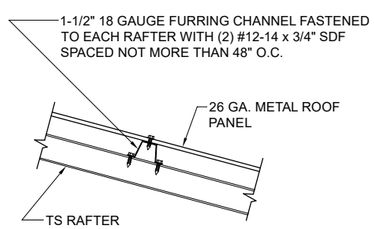

ROOF PANEL ATTACHMENT
(ALTERNATE FOR VERTICAL ROOF PANELS)
Not To Scale

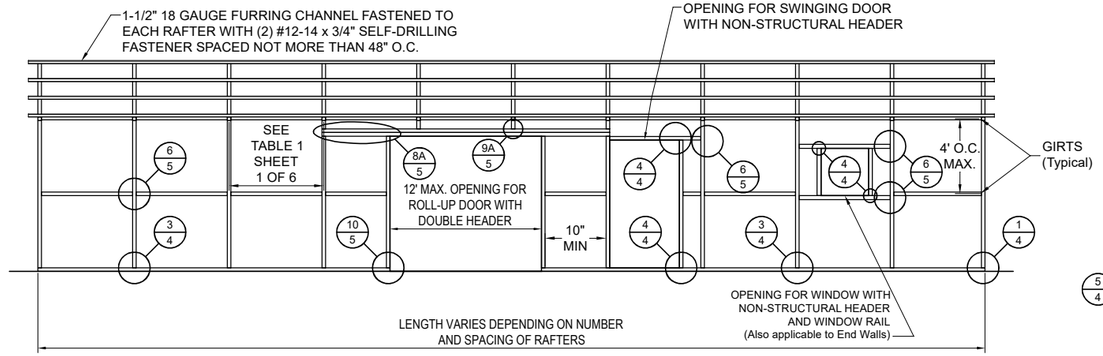

TYPICAL POST/RAFTER/GIRT FRAMING PLAN (12' WIDE MAX. OPENING)
NOT TO SCALE

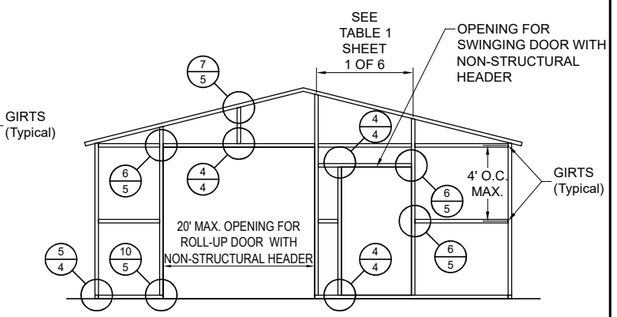

TYPICAL END WALL OPENINGS POST/RAFTER/GIRT FRAMING PLAN
NOT TO SCALE

BOX EAVE FRAME RAFTER ENCLOSED BLDG - VERTICAL SIDES

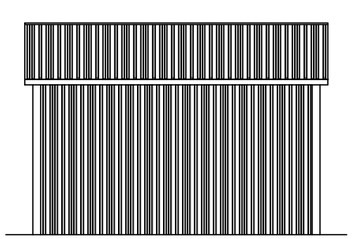

TYPICAL SIDE ELEVATION
NOT TO SCALE

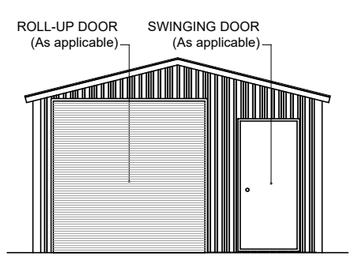

TYPICAL END ELEVATION
NOT TO SCALE

BOX EAVE FRAME RAFTER PARTIALLY OPEN / ENCLOSED BLDG - VERTICAL SIDES

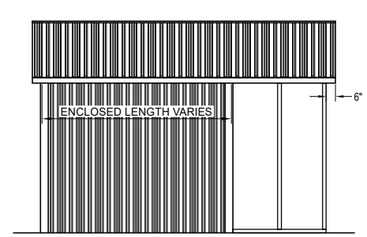

TYPICAL SIDE ELEVATION
NOT TO SCALE

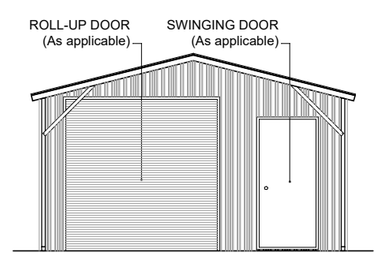

TYPICAL END ELEVATION
NOT TO SCALE

LOVE B PATEL LICENSE No. 90753 STATE OF FLORIDA PROFESSIONAL ENGINEER

This item has been digitally signed and sealed by Love B. Patel, P.E. on the date adjacent to the seal. Printed copies of this document are not considered signed and sealed, and the signature must be verified on any electronic copies.

Love B Patel
2026.01.07
11:15:07 -05'00'

BECHTOL ENGINEERING AND TESTING, INC.

PLEASE NOTE: PLANS EXPIRE MIDNIGHT 09/30/2026

CAROLINA CARPORTS, INC.

GENERIC PLANS FOR USE IN THE STATE OF FLORIDA UP TO 30' WIDE AND RISK CATEGORY I ONLY

BECHTOL ENGINEERING AND TESTING, inc.
CONSULTING GEOTECHNICAL, ENVIRONMENTAL, AND MATERIALS TESTING ENGINEERS
Certificate of Authorization No. 00005492

REVISED:		DATE:	1/2/2025
DRAWN:	CS	SCALE:	NTS
CHECKED:	CS / ID	PROJ. NO.:	G25001
APPROVED:	TB / LP / ID		SHEET 6 OF 6