ALPHA FOUNDATIONS

A Groundworks Company

Customer Name:	Sue Lane
Customer Address:	421 SW Harmony Lane,Lake City FL 32025
Customer Number:	Customer # 89293

To Whom It May Concern:

This engineering report supports the permit application for installation of foundation piers at the above-referenced property by Alpha Foundations, a Groundworks Company.

Foundation piers are designed to provide structural support to the existing foundation system. Detailed product information and specifications are provided in the attached report.

The engineering design is based on conservative load assumptions appropriate for the existing structure. Load calculations and product specifications are included in the attached engineering documentation.

Work will require localized excavation for pier placement. Installation logs documenting locations, depths, and installation data will be recorded. An engineering completion letter will be provided upon installation completion for permit closeout.

This design meets requirements of the **Florida Building Code 2023 8th Edition, Residential**.

Please contact the undersigned with any questions.

Respectfully,

PERMIT ROCKSTAR
Reviewed For Compliance
05/14/2026
Ali Marar FL PE92978
ali@permitrockstar.com 904-656-6957

ANDREW D. THOMAS LICENSE No. 90789 STATE OF FLORIDA PROFESSIONAL ENGINEER

This item has been electronically signed and sealed by Andrew Thomas on the date adjacent to the seal using a SHA authentication code printed copies of this document are not considered signed and sealed and the SHA authentical code must be verified on any electronic copies
2026.05.07 08:54:08-04'00'

5/7/2026

ANDREW THOMAS, P.E.
ENGINEER
ANDREW.THOMAS@GROUNDWORKS.COM
GROUNDWORKS COMPANIES, LLC
ALPHA FOUNDATIONS - FLORIDA ENGINEERING BUS. LIC. #38879

ATTACHMENTS:

ENGINEERING REPORT
DESIGN CALCULATIONS
GENERAL COMMENTARY
PROPOSED INSTALLATION LAYOUT

ENGINEERING REPORT FOR SUPPORT OF EXISTING FOUNDATIONS

BUILDING DEPT.:	Columbia County 132 NE Hernando Ave #21 Lake City, FL 32055
REFERENCE CODE:	FBC 2023, 8th Ed. Residential
DATE:	May 7, 2026
PROJECT:	Sue Lane
ADDRESS:	421 SW Harmony Lane,Lake City FL 32025
CUSTOMER #:	Customer # 89293

ALPHA FOUNDATIONS
A Groundworks Company

FIELD ASSESSMENT BY: Austin **ASSESSMENT DATE:** 5/4/2026

OVERVIEW:

Field assessment was conducted to document existing foundation conditions and determine proposed repair scope. Engineering design is based on field measurements, photographic documentation, and site conditions as documented by field personnel. Scope of work was determined based on observed conditions and owner's repair objectives.

SCOPE-OF-WORK:		*[SEE PRODUCT DETAILS - ATTACHED]*
SCOPE-OF-WORK:	NSI Helical Pier	*[SEE PRODUCT DETAILS - ATTACHED]*

PUSH PIER QUANTITY:		**PUSH PIER SPACING (Typ.):**		*[±12" ALLOWABLE]*
HELICAL PIER QUANTITY:	6	**HELICAL PIER SPACING (Typ.):**	6.0	*[±12" ALLOWABLE]*

GENERAL ISSUE: *Localized settlement of the existing structure per provided layout.*

PROP. SOLUTION: *Install piers at locations shown to provide foundation support per engineering design.*

EXISTING STRUCTURE DETAILS:

- **Classification:** Single Family Residence
- **Stories:** 1
- **Construction Type:** Conventional Light Frame
- **Exterior:** Brick Veneer
- **Foundation Type:** Slab-on-Grade with Masonry Walls on Spread Type Footings
- **Wall Design Loads (Push):** Uniform Wall Load : [ ] plf [Based on FBC-R TABLE R403.4]
- **Wall Design Loads (Helical):** Uniform Wall Load : 1,500 plf [Based on FBC-R TABLE R403.4]

SOIL CONDITIONS:

- **Assumed Allowable Bearing Capacity:** 1,500 psf Based on FBC-R TABLE R401.4.1

Basis of Engineering Design:
Engineering design based on field measurements and site assessment. Engineer did not perform independent site survey or geotechnical investigation. Soil bearing and load values based on FBC presumptive values, experience with similar conditions or conservative assumptions/ calculations as warranted.

PERMIT ROCKSTAR
Reviewed For Compliance
05/14/2026
Ali Marar FL PE92978
ali@permitrockstar.com 904-858-6257

ANDREW D. THOMAS LICENSE No. 90789 STATE OF FLORIDA PROFESSIONAL ENGINEER

This item has been electronically signed and sealed by Andrew Thomas on the date adjacent to the seal using a SHA authentication code
printed copies of this document are not considered signed and sealed and the SHA authentical code must be verified on any electronic copies
2026.05.07 08:54:19-04'00'

5/7/2026

DESIGN CALCULATIONS AND SUMMARY

BUILDING DEPT:	Columbia County
PROJECT:	Sue Lane
ADDRESS:	421 SW Harmony Lane,Lake City FL 32025
DATE:	May 7, 2026

ALPHA FOUNDATIONS
A Groundworks Company

DESIGN CALCULATIONS:

- Based on load criteria and building characteristics outlined in the front page of this report, assume a support load of: 1,500 plf
- Helical Piers Design Spacing: 7 feet — Calculation for additional 12" to allow for field adjustments; See plan for proposed pier spacing.
- Using the support load and design pier spacing indicated above, the load on each pier will be:

PIER LOAD = Support Load x Spacing = 10,500 lbs — **DESIGN ACCEPTABLE** **[SEE NOTE 1 BELOW]**

PIER LOAD LESS THAN ALLOWABLE LOAD OF 23,900 LBS

- Minimum Installation Torque: 2,917 ft-lbs **[SEE NOTE 2 BELOW]**
- Minimum Installation Hydraulic Pressure: 1,100 psi **[Based on Digga MM-10, use attached tables for additional drive heads]**

DESIGN COMMENTS:

NOTE 1: The pier load is less than the "Average" allowable load per pier; Factor of Safety (FS) exceeds 2.5. Refer to the Product Evaluation Report for additional information on the allowable system capacity ratings.

NOTE 2: Contractor shall not exceed maximum recommended installation torque outlined in the Product Evaluation Report. See attached "Groundworks Helical Pier Drive Head Pressure vs Torque Tables" for PSI to Torque conversion based on drivehead model selected in field.

Helical Pier/Bracket Detail (Typ.)

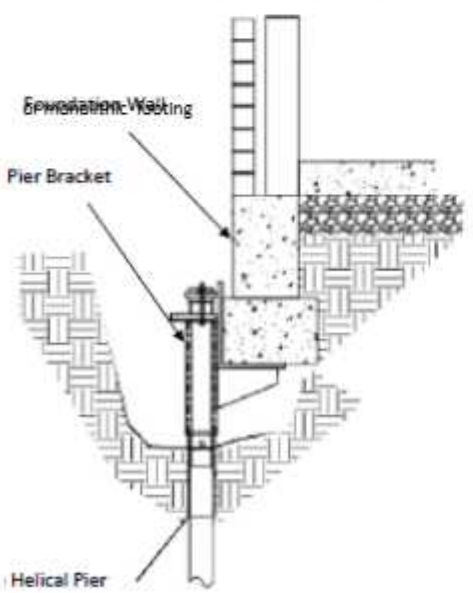

PERMIT ROCKSTAR
Reviewed For Compliance
05/14/2026
Ali Marar FL PE92978
ali@permitrockstar.com 904-656-6957

ANDREW D. THOMAS LICENSE No. 90789 STATE OF FLORIDA PROFESSIONAL ENGINEER

This item has been electronically signed and sealed by Andrew Thomas on the date adjacent to the seal using a SHA authentication code printed copies of this document are not considered signed and sealed and the SHA authentical code must be verified on any electronic copies
2026.05.07 08:54:27-04'00'

5/7/2026

*see attached Product Evaluation Report for additional details and specifications

COMMENTARY & LIMITATIONS

BUILDING DEPT:	Columbia County
PROJECT:	Sue Lane
ADDRESS:	421 SW Harmony Lane,Lake City FL 32025
DATE:	May 7, 2026

ALPHA FOUNDATIONS
A Groundworks Company

GENERAL COMMENTARY

This engineering design is based on information provided by others including photographs, field measurements, installation records, and publicly available data. The engineer did not perform independent site survey, geotechnical investigation, or comprehensive structural evaluation of the existing structure. Unless determined by site-specific geotechnical investigation, soil bearing capacity values are based on presumptive values from the Florida Building Code and the engineer's experience with similar soil conditions in the project area. Actual subsurface conditions may vary across the site due to natural occurrence or previous construction, grading, or fill operations.

Final product locations, quantities, and installation parameters may be adjusted at the engineer's discretion based on actual field conditions encountered. Field personnel shall notify the Engineering Department immediately if differing conditions are encountered, unsuitable soil conditions are found, or design parameters cannot be achieved. Exterior foundation cracks may benefit from appropriate sealing or repair to reduce moisture intrusion. Implementation of such measures is at the discretion of the owner and contractor.

This engineering addresses foundation support at specific locations as defined in the contract scope of work. Work scope is limited to installation of foundation support products at specified locations and does not constitute comprehensive structural evaluation of the entire structure. Additional foundation support may be needed in areas outside the specified scope. ***Permit may remain open with the Authority Having Jurisdiction for up to 180 days after work completion per Florida Building Code Section 105.3.2 & 105.4.1.2.***

LIMITATIONS

This report is prepared for permit submittal purposes only and is not intended for reliance by the property owner or other third parties. Engineering scope is limited to foundation support products at designated locations per contract scope of work and does not constitute comprehensive structural evaluation of the entire structure. This report does not represent forensic investigation, causation determination, or evaluation of areas outside the specified work scope. Engineering design is based on information provided by others including photographs, field measurements, and publicly available data. The engineer did not perform independent site survey, geotechnical investigation, or comprehensive structural inspection. Foundation support products are designed to provide support at specified locations based on conservative load assumptions and have not been designed or analyzed for lateral restraint or specialty applications unless specifically noted. This engineering does not address hidden or concealed conditions, subsurface soil conditions beyond presumptive bearing values, future changes to structure loading or configuration, future modifications to the structure, or future soil condition changes. Exterior foundation repairs such as crack sealing or waterproofing are outside the scope of this engineering. Any work beyond that specifically identified in this report and associated drawings is outside the scope and requires separate evaluation.

FOUNDATION PIER PRODUCT REFERENCES:

- ICC-ES Evaluation Report ESR-5473 (NSI Helical Piers)

Additional Documents:

PERMIT ROCKSTAR
Reviewed For Compliance
05/14/2026
Ali Marar FL PE92978
ali@permitrockstar.com 904-656-6957

ANDREW D. THOMAS
LICENSE
No. 90789
STATE OF
FLORIDA
PROFESSIONAL ENGINEER

This item has been electronically signed and sealed by Andrew Thomas on the date adjacent to the seal using a SHA authentication code printed copies of this document are not considered signed and sealed and the SHA authentical code must be verified on any electronic copies
2026.05.07 08:54:35-04'00'

5/7/2026

LAYOUT PLAN / NOTES

BUILDING DEPT.:	Columbia County
PROJECT:	Sue Lane
ADDRESS:	421 SW Harmony Lane,Lake City FL 32025
DATE:	May 7, 2026

ALPHA FOUNDATIONS
A Groundworks Company

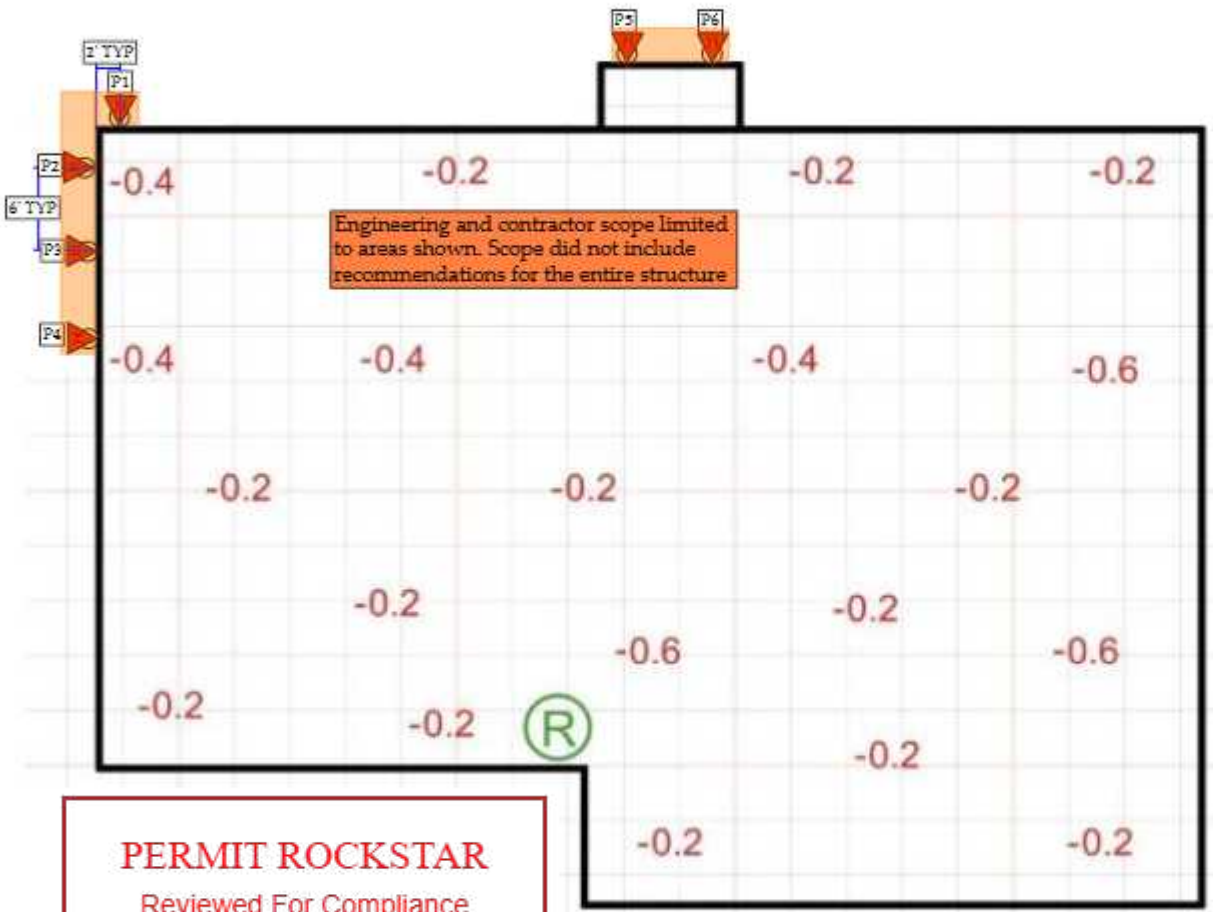

PERMIT ROCKSTAR
Reviewed For Compliance
05/14/2026
Ali Marar FL PE92978
ali@permitrockstar.com 904-656-6957

Helical Pier
Maximum Spacing 6' +/- 1'
Maximum Spacing 2' +/- 1' from Corners / Maximum Spacing Between Piers 4'

FOUNDATION PIER INSTALLATION NOTES

1. Contractor shall verify field dimensions and existing conditions prior to work. Product locations based on field site assessment by others; Engineer did not perform independent instrument survey. If locations are changed or the provided information doesn't match actual site conditions the Engineer should be contacted.
2. Install per manufacturer specifications and attached ICC-ES ESR or approved engineering alt.
3. Foundation piers shall achieve design capacity as demonstrated by installation torque, driving resistance, or depth requirements per engineering calculations. Piers shall be installed to depths and pressure/torque values shown in calculations on previous pages of this report. Record installation depths and pressure/torque in installation logs. Final copies of the log should be provided to the Engineer.
4. Notify Engineer immediately if unsuitable soil conditions encountered or design parameters cannot be achieved.
5. Final installed locations and installation data to be documented in installation record for permit closeout.
6. Engineering and contractor scope is limited to foundation pier installation only. Masonry wall cracking is outside the scope of this engagement and should be evaluated independently by a qualified engineer.
7. Engineer's services are limited to the supplemental support system shown. Construction means, methods, and installation and temporary shoring (as required) are the contractor's responsibility. The Engineer will not be responsible for damage caused during installation.

SLAB PIERS/POLYURETHANE FOAM

The subject piers are only designed for supporting vertical settlement of the exterior walls. If the slab or interior walls show signs of distress then it is recommended to consider the installation of slab piers and polyurethane foam. Failure to follow both of these recommendations could result in additional observed movement inside of the structure.

STRUCTURE LIFTING

It is not recommended to attempt lifting the structure with the subject pier(s) without the use of NCFI-2.5F Polyurethane or equivalent. Any lift performed should be at the customers discretion. Alpha Foundations and the Engineer of Record will not be responsible for any short or long term damage caused by lifting attempts

ANDREW D. THOMAS LICENSE No. 90789 STATE OF FLORIDA PROFESSIONAL ENGINEER

This item has been electronically signed and sealed by Andrew Thomas on the date adjacent to the seal using a SHA authentication code printed copies of this document are not considered signed and sealed and the SHA authentical code must be verified on any electronic copies
2026.05.07 08:54:43-04'00'

5/7/2026

ICC EVALUATION SERVICE®

ICC-ES Evaluation Report

ESR-5473

Issued July 2025

Subject to renewal July 2026

This report also contains:

- City of LA Supplement
- CA Supplement
- FL Supplement

PERMIT ROCKSTAR
Reviewed For Compliance
05/14/2026
Ali Marar FL PE92978
ali@permitrockstar.com 904-656-6957

ICC-ES Evaluation Reports are not to be construed as representing aesthetics or any other attributes not specifically addressed, nor are they to be construed as an endorsement of the subject of the report or a recommendation for its use. There is no warranty by ICC Evaluation Service, LLC, express or implied, as to any finding or other matter in this report, or as to any product covered by the report.

Copyright © 2025 ICC Evaluation Service, LLC. All rights reserved.

DIVISION: 31 00 00—EARTHWORK Section: 31 63 00—Bored Piles	REPORT HOLDER: NSI (INDIA) LTD.	EVALUATION SUBJECT: HELICAL FOUNDATION SYSTEMS	

1.0 EVALUATION SCOPE

Compliance with the following codes:

- 2024, 2021, 2018 and 2015 *International Building Code®* (IBC)
- 2024, 2021, 2018 and 2015 *International Residential Code®* (IRC)

Properties evaluated:

- Structural
- Geotechnical

2.0 USES

2.1 IBC:

Under the IBC, the Helical Foundation System is used to transfer compressive, tension, and lateral loads from a new or existing structure to soil bearing strata suitable for the applied loads. Brackets are used to transfer the loads from the building foundation to the helical pile system.

2.2 IRC:

Under the IRC, the Helical Foundation System may be used as an alternate foundation system supporting light-frame construction, exterior porch deck, elevated walkway and stairway construction and accessory structures.

3.0 DESCRIPTION

3.1 General:

The Helical Foundation System consists of helical piles connected to brackets that are in contact and connected with the load-bearing foundation of a structure.

3.2 System Components:

3.2.1 S-3000 Series Lead Section and Extensions: The lead shafts and extensions consist of $2^7/_8$-inch (73 mm) outside-diameter steel pipe having a nominal shaft thickness of 0.217 inch (5.51 mm) complying with ASTM A500 Grade C having a minimum yield strength of 50 ksi (355 MPa) and a minimum tensile strength of 70 ksi (490 MPa). The leading edge of lead the lead shaft is beveled 45 degrees.

Helical-shaped discs, welded to the pipe, advance the helical piles into the soil when the pile is rotated. The helical pile lead sections and extensions are connected to each other using an external coupler. The coupler is factory-welded to the leading end of each extension and bolted to the following section with (2) $^3/_4$-inch-diameter (19.0 mm) structural bolts. The lead shafts, extensions and bolts are available in bare steel or galvanized in accordance with ASTM A123. See Figure 1.

3.2.2 Helical Plates: The helical discs (plates) are 8, 10, 12 or 14 inches (203, 254, 305 or 356 mm) in diameter, and are cut from 3/8-inch-thick (9.5 mm) or ½-inch-thick (12.7 mm) steel plate conforming to ASTM A572 Grade 50, having a minimum yield strength of 50 ksi (345 MPa) and a minimum tensile strength of 65 ksi (450 MPa). The helical plates are shop-welded to the helical lead shaft. Helixes are spaced at 3 times the diameter of the lower helix. The helical plates are available in bare steel or galvanized in accordance with ASTM A123. See Figure 1.

3.2.3 Couplers: The external coupler consists of 3½-inch (89 mm) outside-diameter steel pipe having a nominal thickness of 0.254 inch (6.45 mm) complying with ASTM A500 Grade C having a minimum yield strength of 50 ksi (355 MPa) and a minimum tensile strength of 70 ksi (490 MPa). The coupler is factory welded to the extension in accordance with the approved quality control documentation. The couplers are available in bare steel or galvanized in accordance with ASTM A123. See Figure 1.

3.2.4 Brackets: Brackets are constructed from steel plate and steel pipe components, which are factory-welded together. The different brackets are described in the following subsections. Bracket assemblies are available in bare steel and with an optional galvanization coating complying with ASTM A123 as described in the approved quality documentation.

3.2.4.1 Underpinning Bracket (Type A Side Load): This bracket is used to support existing concrete foundations supporting axial compressive loading. The bracket is constructed of a 3/8-inch-thick (9.5 mm) steel plate conforming to ASTM A572 Grade 50 having a minimum yield strength of 50 ksi (345 MPa) and a minimum tensile strength of 65 ksi (450 MPa), bent to a 90-degree angle seat measuring 10.5 inches (267 mm) wide by 8 inches (203 mm) long on the horizontal leg and 6 inches (152 mm) on the vertical leg. The seat is factory-welded to a 3/8-inch (9.5 mm) thick U-shaped plate and two 3/8-inch (9.5 mm) thick stiffener plates, which are factory-welded to a 3½-inch (89 mm) outside-diameter steel pipe sleeve having a nominal thickness of 0.254 inch (6.45 mm). The U-shaped plate and stiffener plates are constructed of steel complying with ASTM conforming to ASTM A572 Grade 50 having a minimum yield strength of 50 ksi (345 MPa) and a minimum tensile strength of 65 ksi (450 MPa). The steel pipe sleeve complies with ASTM A500 Grade C having a minimum yield strength of 50 ksi (345 MPa) and a minimum tensile strength of 60 ksi (425 MPa).

A 9 inch (229 mm) wide by 4 inch (102 mm) long by 1 inch (25.4 mm) thick stopper plate with a 3½-inch (89 mm) outside-diameter steel pipe sleeve having a nominal thickness of 0.216 inch (5.49 mm) by ¾-in long (19.1 mm) is centered on top of the pile and is attached to the bracket sleeve with two ¾" inch (19.1 mm) long threaded steel rods and matching nuts. The stopper plates complies with ASTM A36 with a minimum yield strength of 36 ksi (250 MPa) and a tensile strength of 58 – 80 ksi (400-550 MPa). The pipe complies with ASTM A500 Grade B with a minimum yield strength of 45 ksi (315 MPA) and an ultimate tensile strength of 58 ksi (400 MPa). See Figure 3.

3.2.4.2 New Construction Bracket (Type B Direct Load): The new construction brackets are used in the new construction of concrete foundations where the steel bearing plate of the bracket is cast into the new concrete foundations (grade beam, footing or pile cap). The brackets are available to transfer compression, tension and lateral loads between the pile and the concrete foundation. The new construction brackets come with either a 6-inch by 6 inch by ½-inch thick (152 mm by 152 mm by 12.7 mm) or 8-inch by 8-inch by ¾-inch thick (203 mm by 203 mm by 19.1 mm) bearing steel plate conforming to ASTM A572 Grade 50 having a minimum yield strength of 50 ksi (345 MPa) and a minimum tensile strength of 65 ksi (450 MPa). Each bearing steel plate comes with (2) 7/8-inch (22.2 mm) diameter and (1) 5/8" (15.9 mm) diameter predrilled holes and is factory welded to a 3½-inch (89 mm) outside-diameter steel pipe having a nominal thickness of 0.254 inch (6.45 mm) complying with ASTM A500 Grade C having a minimum yield strength of 50 ksi (355 MPa) and a minimum tensile strength of 70 ksi (490 MPa). The bracket is attached to the pile shaft with (2) 3/4-inch (19 mm) diameter structural bolts with matching nuts per Section 3.2.5.3 of this report. See Figure 2.

3.2.5 Threaded Rods, Bolts and Nuts:

3.2.5.1 Helical Lead Shaft and Extensions Coupler Bolts and Nuts: The bolts used to connect helical lead shafts and extensions are ¾-in (19 mm) diameter by 4.5 inches (114 mm) long with a 1 ¾ inch (44.5 mm) threaded length head bolts. Bolts comply with SAE J429 Grade-8 having a minimum yield strength of 130 ksi (895 MPa) and a minimum tensile strength of 150 ksi (1034 MPa) and nuts comply with SAE J995 Grade 8.

3.2.5.2 Underpinning Bracket Threaded Rods: The rods must be 3/4-inch (19 mm) by 16 in (406 mm) long complying with ASTM A193 Grade B7 with a minimum yield strength of 105 ksi (720 MPa) and a minimum tensile strength of 125 ksi (860 MPa), with 3/4-inch (19 mm) heavy hex nuts complying with ASTM A194 Gr. 2H and flat washers complying with ASTM F436 Type-1, or 3/4-inch (19 mm) by 18 in (457 mm) long complying with ASTM A108 Grade 1045 with a minimum yield strength of 70 ksi (481 MPa) and a minimum tensile strength of 97 ksi (666 MPa) with 3/4-inch (19 mm) heavy coil nuts complying with ASTM A1045 and flat washers complying with ASTM F436 Type-1.

3.2.5.3 New Construction Bracket Bolts and Nuts: The bolts used to attach the new construction bracket

PERMIT ROCKSTAR
Reviewed For Compliance
03/14/2026
Ali Marar FL PE92978
ali@permitrockstar.com 904-858-6257

sleeve to the shaft are 3/4-inch (19 mm) diameter bolts complying with SAE J429 Grade-8 having a minimum yield strength of 130 ksi (895 MPa) and a minimum tensile strength of 150 ksi (1034 MPa) and nuts comply with SAE J995 Grade 8.

4.0 DESIGN AND INSTALLATION

4.1 Design:

Structural calculations and drawings, prepared by a registered design professional, must be submitted to the code official for each project, based on accepted engineering principles, as described in 2024, 2021, 2018 and 2015 IBC Section 1604.4 and Section 1810. Under the IRC, the registered design professional must design the helical pile system and devices, including the bracket, used as a foundation element. The applied loads must not exceed the published capacities shown in this report for the helical pile system and devices. The registered design professional may determine the design forces in accordance with IRC Section R301 or, as an alternate, in accordance with IBC provisions. The load values (capacities) shown in this report are based on the Allowable Strength Design (ASD) method.

The structural analysis must consider all applicable internal forces (shear, bending moments and torsional moments, if applicable) due to applied loads, structural eccentricity and maximum span(s) between helical foundations. The result of the analysis and the structural capacities must be used to select a helical foundation system based on the structural and geotechnical demands. The minimum embedment depth for various loading conditions must be included based on the most stringent requirements of the following: engineering analysis, tested conditions described in this report, site-specific geotechnical investigation report, and site-specific load tests, if applicable. For helical foundation systems subject to combined lateral and axial (compression or tension) loads, the allowable strength of the shaft under combined loads must be determined using the interaction equation prescribed in Chapter H of AISC 360.

A site-specific geotechnical investigation report must be submitted to the code official as part of the required submittal documents, prescribed in Section 107 of the 2024, 2021, 2018 and 2015 IBC, at the time of permit application. Under the IRC, a site-specific soil investigation report is not required if the helical pile system described in the evaluation report is being installed to support IRC structures defined in Section 2.2 of this report and the soil capacity of the helical pile must be established in accordance with Equation 3 in Section 4.1.4 of this report. The site-specific geotechnical investigation report must include, but not be limited to, all of the following:

1. A plot showing the location of the soil investigation.
2. A complete record of the soil boring and penetration test logs and soil samples.
3. A record of soil profile.
4. Information on groundwater table, frost depth and corrosion-related parameters, as described in Section 5.5 of this report.
5. Soil properties, including those affecting the design such as support conditions of the piles.
6. Allowable soil bearing pressure.
7. Soil design parameters, such as shear strength parameters required by Section 4.1.5; soil deformation parameters; and relative pile support conditions as defined in Section 1810.2.1 of the 2024, 2021, 2018 and 2015 IBC.
8. Confirmation of the suitability of helical foundation systems for the specific project.
9. Recommendations for design criteria, including but not be limited to, mitigation of effects of differential settlement and varying soil strength; and effects of adjacent loads.
10. Recommended center-to-center spacing of helical pile foundations, if different from spacing noted in Section 5.11 of this report; and reduction of allowable loads due to the group action, if necessary.
11. Field inspection and reporting procedures (to include procedures for verification of the installed bearing capacity, when required).
12. Load test requirements.
13. Any questionable soil characteristics and special design provisions, as necessary.
14. Expected total and differential settlement.
15. The axial compression, axial tension and lateral load soil capacities if values cannot be determined from this evaluation report.
16. Minimum helical pile depth, if any, based on local geological hazards such as frost, expansive soils, or other conditions.

PERMIT ROCKSTAR
Reviewed For Compliance
05/14/2026
Ali Marar FL PE92978

The allowable axial compressive or tensile load of the helical pile system must be based on the least of the

following in accordance with 2024, 2021, 2018 and 2015 IBC Section 1810.3.3.1.9:

- Sum of the areas of the helical bearing plates times the ultimate bearing capacity of the soil or rock comprising the bearing stratum divided by a safety factor of 2. This capacity will be determined by a registered design professional based on site-specific soil conditions. Under the 2024 and 2021 IBC, the axial capacity also includes the shaft resistance. The shaft resistance is equal to the area of the shaft above the uppermost helical bearing plate times the ultimate skin resistance.
- Allowable capacity determined from well-documented correlations with installation torque. Section 4.1.4 of this report includes torque correlation factors used to establish pile capacities based on documented correlations.
- Allowable capacity from load tests. This capacity will be determined by a registered design professional for each site-specific condition. Under the 2024 and 2021 IBC, the load tests must comply with 2024 and 2021 IBC Section 1810.3.3.1.2.
- Allowable axial capacity of pile shaft. Section 4.1.2 of this report includes pile shaft capacities.
- Allowable axial capacity of pile shaft couplings. Section 4.1.2 of this report includes pile shaft coupling capacities.
- Sum of the allowable axial capacity of helical bearing plates affixed to pile. Section 4.1.3 of this report includes helical plate axial capacities.
- Allowable axial capacity of the bracket. Section 4.1.1 of this report includes bracket capacities.

4.1.1 Bracket Capacity: The concrete foundation must be designed and justified to the satisfaction of the code official with due consideration to the eccentricity of applied loads, including reactions provided by the brackets, acting on the concrete foundation. For underpinning brackets, only localized limit states of supporting concrete foundation, including bearing and punching shear, have been evaluated in this evaluation report. For new construction brackets, the local limit states of punching (two-way) shear, bearing and side breakout have also been evaluated in this report. Other limit states are outside the scope of this evaluation report and must be determined by the registered design professional. The effects of reduced lateral sliding resistance due to uplift from wind or seismic loads must be considered for each project. Reference Table 4A, 4B and 4C for the allowable bracket capacities.

4.1.2 Pile Shaft Capacity: The top of shafts must be braced as described in 2024, 2021, 2018 and 2015 IBC Section 1810.2.2. In accordance with 2024, 2021, 2018 and 2015 IBC Section 1810.2.1, any soil other than fluid soil must be deemed to afford sufficient lateral support to prevent buckling of the systems that are braced, and the unbraced length is defined as the length of piles standing in air, water, or in fluid soils plus an additional 5 feet (1524 mm) when embedded into firm soil or an additional 10 feet (3048 mm) when embedded into soft soil. Firm soils must be defined as any soil with a Standard Penetration Test blow count of five or greater. Soft soils must be defined as any soil with a Standard Penetration Test blow count greater than zero and less than five. Fluid soils must be defined as any soil with a Standard Penetration Test blow count of zero [weight of hammer (WOH) or weight of rods (WOR)]. Standard Penetration Test blow count must be determined in accordance with ASTM D1586.

Under the IRC, when helical pile shafts are fully embedded into soil conditions defined in 2024 IRC Table R401.4.1(1) (2021, 2018, and 2015 IRC Table R401.4.1) the helical pile shafts are deemed adequately supported to prevent from buckling. The shaft capacity of the helical foundation systems in air, water, and fluid soils must be determined by a registered design professional.

Reference Table 1 for mechanical properties of the shafts and Table 2 for allowable shaft capacities.

4.1.3 Helix Plate Capacity: The helix plates are spaced three times the diameter of the lowest plate apart starting at the toe of the lead section. For helical piles with more than one helix, the allowable helix capacity for the helical foundation systems and devices may be taken as the sum of the least allowable capacity of each individual helix. The helix plate ASD capacities are as shown in Table 3.

4.1.4 Soil Capacity: The allowable axial compressive or tensile soils capacity must be determined by a registered design professional in accordance with a site-specific geotechnical report, as described in Section 4.1, combined with the individual helix bearing method (Method 1), or from field loading tests conducted under the supervision of a registered design professional (Method 2). For either Method 1 or Method 2, the predicted axial load capacities must be confirmed during the site-specific production installation, such that the axial load capacities predicted by the torque correlation method are equal to or greater than what is predicted by Method 1 or 2, described above. The individual bearing method is determined as the sum of the individual areas of the helical bearing plates times the ultimate bearing capacity of the soil or rock comprising the bearing stratum.

The design allowable axial load must be determined by dividing the total ultimate axial load capacity predicted

PERMIT RONCELLI
Reviewed For Code Compliance
05/14/2026
Ali Marar FL PE92978
ali@permitroncelli.com 904-898-6957

by either Method 1 or 2, above, divided by a safety factor of at least 2. The torque correlation method must be used to determine the ultimate capacity (Q_{ult}) of the pile and the minimum installation torque (Equation 1). A factor of safety of 2 must be applied to the ultimate capacity to determine the allowable soil capacity (Q_{all}) of the pile (Equation 2).

Under the IRC, if the helical pile device is being installed to support structures governed by the IRC as defined in Section 2.2 of this evaluation report, and a site-specific geotechnical report is not available, a safety factor of 2.5 must be used with the torque correlation method in lieu of Method 1 or 2 to determine the allowable soil capacity of the pile (Equation 3).

$$Q_{ult} = K_t T \qquad \text{(Equation 1)}$$

$$Q_{all} = 0.5\, Q_{ult} \qquad \text{(Equation 2)}$$

$$Q_{all} = 0.4\, Q_{ult} \qquad \text{(Equation 3)}$$

where:

Q_{all} = Allowable axial tensile or compressive capacity, lbf (N), of the helical pile.

K_t = Torque correlation factor of 9 ft^{-1} (29.5 m^{-1}) for $2^7/_8$-inch-diameter (73 mm) pile.

T = Final installation torque in ft-lbf or N-m. The final installation torque is defined as the last torque reading taken when terminating the helical pile installation. The torque measurement can be determined using calibrated load cell when used in conjunction with the manufacturer-provided helical driver torque chart. Other methods of directly measuring final installation torque include hydraulic gauges, PT-tracker or shear pin indicator.

The ultimate and allowable axial compression and tension soil capacity must not exceed the applicable loads at maximum torque capacities listed in Table 2.

The lateral capacity of the $2^7/_8$-inch-diameter (73 mm) helical pile is 535 lbf (2.38 kN) and is based on field testing of the helical pile with a single 10-inch-diameter (254 mm) helix plate installed in a firm clay soil, having an average standard penetration test blow count of 17, at a minimum embedment of 9 feet 2.74 m). For soil conditions other than firm clay, the lateral capacity of the pile must be determined by a registered design professional.

4.1.5 Settlement Analysis: The pile head vertical movement at allowable load may be estimated as the sum of the following: the movement at helix plates due to soil deformation and helix plate deflection, and the shaft elastic shortening or lengthening.

PERMIT ROCKSTAR
Reviewed For Compliance
05/14/2026
Ali Marar FL PE92978
ali@permitrockstar.com 904-898-8957

The corresponding equation is described below:

$$\Delta total = \Delta helix + \Delta shaft \qquad \text{(Equation 6)}$$

Where:

$\Delta total$ = Total pile head vertical movement, in (mm).

$\Delta helix$ = Movement of helix plates within the soil, in (mm).

$\Delta shaft$ = Shaft elastic shortening/lengthening, in (mm).

The reliability of the foundation system capacity and settlement predictions may be improved by performing full-scale field tests at the construction site using piles of same configuration as the intended production piles.

4.1.6 Shaft Elastic Shortening and Lengthening: Elastic shortening or lengthening of a helical pile shaft may be a significant contributor to overall pile head movement under load for long piles. For loads up to and including the allowable load limits found in the tables of this report, the length change can be estimated as:

$\Delta shaft$ = PL/AE

Shaft = Length change of shaft resulting from elastic shortening or lengthening, in (mm)

P = Applied axial load, lbf (N).

L = Effective length of the shaft, in (mm).

A = Cross sectional area of the shaft, in^2 (mm^2), see Table 1.

E = Young's modulus of the shaft, may be taken as 29,000 ksi (200,000 MPa).

The effective length of the shaft, L, may be approximated as the average of the distances from the point of load application to each helical plate.

The elastic shortening/lengthening of the pile shaft will be controlled by strength and section properties of the helical shaft and the following:

- Bare Steel [0.217-inch-thick (5.5 mm) steel shaft]
  - Potential elastic shortening due to compression load= 0.012 in/ft (1 mm/m) of shaft at allowable maximum compressive load.

- Potential elastic lengthening due to tensile load= 0.008 in/ft (0.667 mm/m) of shaft and 0.004 in/coupler (0.102 mm/coupler) at allowable maximum tensile load.
- Slip in coupler due to tensile load= 0.349 in/coupler (8.86 mm/coupler).

- Galvanized Steel [0.217-inch-thick (5.5 mm) steel shaft]
  - Potential elastic shortening due to compression load= 0.012 in/ft (1 mm/m) of shaft at maximum allowable compressive load.
  - Potential elastic lengthening due to tensile load= 0.008 in/ft (0.667 mm/m) of shaft and 0.004 in/coupler (0.102 mm/coupler) at maximum allowable tensile load.
  - Slip in coupler due to tensile load= 0.318 in/coupler (8.08 mm/coupler)

4.1.7 Helix Movement: The evaluation of helix movement due to helix deformation, soil deformation, and helix-soil interaction, is beyond the scope of this evaluation report. It is recommended that the user of this report consult with the registered design professional and helical pile manufacture (NSI (India), Ltd).

4.2 Installation:

The Helical Foundation System must be installed by NSI (India) Ltd. certified and trained installers. The Helical Foundation System must be installed in accordance with this section (Section 4.2) and the manufacturer's installation instructions, or the site-specific approved construction documents, whichever is most stringent governs. For tension application, the helical pile must be installed such that the minimum depth from the ground surface to the uppermost helix is 12D, where D is the diameter of the largest helix. The bolts must be snug-tightened as defined in Section J3 of AISC 360. All field-cut or drilled pilings must be protected from corrosion as recommended by the registered design professional. Installation of helical piles must comply with Section 4.2.2 of this report and 2024, 2021, 2018 and 2015 IBC Section 1810.4.11.

4.2.1 Helical Pile Installation with Underpinning Bracket:

1. Prepare the work area to ensure safe operation of equipment with the intent of avoiding accidents.
2. Identify the location where the supporting pile and bracket will be installed.
3. Begin opening an excavation at the identified location. Remove soil in a manner large enough for bracket installation operations. Digging methods should be performed per OSHA requirements. Pause excavating at the bottom of the footing.
4. If a notch in the footing is required by the engineering plans, specifications, or code requirements, perform this operation before excavating further. This will make use of the existing soil to support the footing while being notched and reduce the potential for adjacent damage. Use appropriate tools to perform the notching operation, including saw cuts and/or demolition chipper. Cut the notch to match the engineer's dimension requirements. Cut faces should be prepped to be 90 degrees from one another, be relatively smooth, clean, and free of debris.
5. Continue the excavation below the footing to provide sufficient space to install the bracket, but avoid making the excavation unnecessarily large. A working space approximately 12 inches below the footing, 16 inches wide and 12 inches back from the prepared foundation is usually sufficient.
6. The bracket should be test fit checked to ensure proper mating with the planned installation location.
7. Install the helical pile such that the shaft is about 1-inch away from the prepared face. The shaft may be no more than 1 to 3 degree angle relative to the prepared face if space is needed for the install motor.
8. Once the pile has reached the depth or torque required for the project, and no couplings are located within 16 inches below the footing, pile installation should stop and the motor removed from the pile. The upper portion of the shaft may be cut down to accept the underpinning bracket.
9. Install bracket over pile shaft and swing 180 degrees into position under footing. Add the stopper plate on top of the cut shaft. Install hardware as necessary using ¾-inch threaded rod and correct nuts to attach the stopper plate to the bracket. All hardware should meet the product specifications.
10. Hand tighten nuts on threaded rod while holding the bracket in position under and against the footing. Place non-shrink grout in any voids between bracket plate and the underside of the prepared foundation. Tighten snug and with an appropriate wrench and allow sufficient time for the grout to cure.
11. Foundation pre-loading or lifting should be performed with hydraulic jacking systems or by other methods, as required by the engineer. Once any preload or elevation adjustment is completed, the underpinning bracket should be re-tightened support the foundation.
12. Backfill the excavated working pit around the shaft and bracket. Take care to fill any space below the footing. Compact backfill soil. Backfill as necessary to match adjacent grades and slopes.

PERMIT ROCKSTAR
Reviewed For Compliance
03/14/2026
Ali Marar FL PE92978
ali@permitrockstar.com 904-656-6357

4.2.2 New Construction Helical Pile Installation:

1. The lead helical section must be installed and successive extensions must be added as needed until the

desired torque and capacity are achieved.

2. The pile must be cut squarely to the desired height upon termination of the pile.
3. The new construction bracket is placed over the top of the pile. If the pile is to be used to resist tension forces, the new construction bracket must be embedded the proper distance into the footing or grade beam as required to resist the tension loads as determined by a registered design professional, and must be through-bolted to the pile. Reference Table 4B for the proper embedment of the pile into the footing or grade beam for tension resistance.
4. Steel reinforcement bars are placed and tied to the bracket if applicable. The concrete is then placed according to the construction documents.

4.3 Special Inspection:

4.3.1 IBC: Continuous special inspection in accordance with 2024, 2021, 2018 and 2015 IBC Section 1705.9 is required for installation of the Helical Pile foundation system. Where on-site welding is required, special inspection in accordance with 2024, 2021, 2018 and 2015 IBC Section 1705.2 is required. The special inspector must verify the following:

PERMIT ROCKSTAR
Reviewed For Compliance
05/14/2026
Ali Marar FL PE92978
ali@permitrockstar.com 904-858-8357

1. Verification of manufacturer product model numbers
2. Types, configurations and identifications of helical pier lead sections, extensions, brackets, bolts and torque as specified in this report and the construction documents.
3. Installation procedures, anticipated and actual piling depth.
4. Required target installation torque of piles and depth of the helical foundation system.
5. Inclination and position of helical piles; hub of pile extension in full contact with bracket; full-surface contact of foundation brackets with concrete; tightness of all bolts; and evidence that the helical pile foundation systems are installed by an approved installer.
6. Other pertinent installation data as required by the registered design professional in responsible charge and compliance of installation of helical pile system with the approved geotechnical investigation report, construction documents and this evaluation report.

4.3.2 IRC: Continuous special inspection of helical pile system and devices installed under the provisions of the IRC defined in this report is not required.

5.0 CONDITIONS OF USE:

The Helical Foundation System described in this report comply with, or are suitable alternatives to what is specified in, those codes indicated in Section 1.0 of this report, subject to the following conditions:

5.1 The Helical Foundation System is manufactured, identified and installed in accordance with this report, the approved construction documents and the manufacturer's published installation instructions. In the event of a conflict between this report, the approved construction documents and the manufacturer's published installation instructions, the most restrictive governs.

5.2 The helical foundation system may be used to support structures assigned to Seismic Design Categories (SDCs) A through F in accordance with the IBC; and SDCs A through C; D through D_2; and E in accordance with the IRC. Anchorage must be addressed by the registered design professional for each site in accordance with Section 5.3 of this report and subject to approval by the code official. Consideration of design seismic forces for all seismic design categories must include an overstrength factor of 3 in accordance with Section H in ASCE 7 Table 12-2.1 and in equations 12.4-5, 12.4-6 and 12.4-7.

5.3 When installed in Seismic Design Categories D, E and F under the IBC; and D through D2 and E under the IRC, the following conditions must be considered:

a. The strength of the top bracket connection to the shaft and to the foundation of the structure shall comply with IBC Section 1810.3.11.2 and must not exceed the published capacities noted in Section 4.1.1 of this report.

b. The shaft seismic flexural length must be determined by registered design professional in accordance with applicable code sections of the IBC. The shaft seismic flexural length is defined as the length of the shaft equal to 120 percent of the shaft flexural length.

c. The shaft couplers shall be limited to the shaft capacity reported in Section 4.1.2 of this report and must comply with the requirements in IBC Section 1810.3.6.1.

d. The analysis of the seismic forces imparted on the bracket, bracket connection to foundation and pile must be prepared by a registered design professional taking into account soil characteristics such as liquefiable zone, length of pile in air or length of fluid conditions per the appropriate code.

5.4 Installation of the helical foundation system must be limited to support of uncracked normal-weight concrete, as determined in accordance with the applicable code.

5.5 Both the underpinning bracket and the new construction bracket must be used only to support structures that are laterally braced as defined in 2024, 2021, 2018 and 2015 IBC Section 1810.2.2.

5.6 The helical foundation system used in conditions that are indicative of a potential pile corrosion situation as defined by soil resistivity of less than 1000 ohm-cm, a pH of less than 5.5, soils with high organic content, sulfate concentrations greater than 1000 ppm, landfills, or mine waste is beyond the scope of the evaluation report.

5.7 Hot-dip galvanized steel and bare steel components must not be combined in the same system unless bare steel capacity is used as the design capacity. All helical foundation components must be galvanically isolated from concrete reinforcing steel, building structural steel, or any other metal building components.

5.8 The helical piles must be installed vertically into the ground with a maximum allowable angle of inclination of 1 degree. To comply with the requirements found in Section 1810.3.1.3 of the 2024, 2021, 2018 and 2015 IBC, the superstructure must be designed to resist the effects of helical pile eccentricity.

5.9 Special inspection is provided in accordance with Section 4.3 of this report.

5.10 Engineering calculations and drawings, in accordance with recognized engineering principles and design parameters as described in 2024, 2021, 2018 and 2015 IBC Section 1604.4, and in compliance with Section 4.1 of this report, are prepared by a registered design professional and approved by the building official.

5.11 Reinforcing detailing in the helical pile caps must be designed by a registered design professional in accordance with ACI 318 Chapter 19 and approved by the building official.

5.12 A site-specific geotechnical investigation report in accordance with Section 4.1 of this evaluation report, for each project site must be provided to the building official for approval under the IBC.

5.13 When using the alternative basic load combinations prescribed in 2024 IBC Section 1605.2 (2021, 2018 and 2015 IBC Section 1605.3.2), the allowable stress increases permitted by material chapters of the IBC or the referenced standards are prohibited.

5.14 In order to avoid group efficiency effects, an analysis prepared by a registered design professional must be submitted where the center-to-center spacing of axially loaded helical piles is less than three times the diameter of the largest helix plate at the depth of bearing. An analysis prepared by a registered design professional must also be submitted where the center-to-center spacing of laterally loaded helical piles is less than eight times the least horizontal dimension of the pile shaft at the ground surface. Spacing between helical plates must not be less than 3D, where D is the diameter of the largest helical plate measured from the edge of the helical plate to the edge of the helical plate of the adjacent helical pile; or 4D, where the spacing is measured from the center-to-center of the adjacent helical pile plates.

5.15 Settlement of the helical foundation system is outside the scope of this evaluation report and must be determined by a registered design professional as required in 2024, 2021, 2018 and 2015 IBC Section 1810.2.3.

5.16 The Helical Foundation System is manufactured under a quality-control program with inspections by ICC-ES.

6.0 EVIDENCE SUBMITTED

Data in accordance with the ICC-ES Acceptance Criteria for Helical Foundation Systems and Devices (AC358), dated June 2020 (editorially revised February 2024).

7.0 IDENTIFICATION

7.1 The Helical Foundation System components are identified by a tag or label bearing the NSI (India) Ltd. logo, the name and address of NSI (India) Ltd., the catalog number, the product description, and the evaluation report number (ESR-5473).

7.2 The report holder's contact information is the following:

NSI (INDIA) LTD.
BALLY HOUSE, GROUND FLOOR, 69A, KARAYA ROAD
KOLKATA, WEST BENGAL 700019
INDIA
+91 9830226000
https://www.nsilimited.com
nsi@nsilimited.com
hm@nsilimited.com

PERMIT ROCKSTAR
Reviewed For Compliance
05/14/2026
Ali Marar FL PE92978
ali@permitrockstar.com 904-858-8251

TABLE 1 —MECHANICAL PROPERTIES AFTER CORROSION LOSS IN STEEL THICKNESS OF 2.875-INCH-DIAMETER HELICAL SHAFTS[1]

MECHANICAL PROPERTIES	BARE STEEL	GALVANIZED STEEL
Nominal Shaft Diameter (in)	2.875	2.875
Steel Yield Strength, F_y (ksi)	50	50
Steel Ultimate Strength, F_u (ksi)	70	70
Modulus of Elasticity, E (ksi)	29,000	29,000
Nominal Wall Thickness (inch)	0.217	0.217
Design Wall Thickness (inch)	0.202	0.202
Outside Diameter (inch)	2.839	2.870
Inside Diameter (inch)	2.507	2.477
Cross Sectional Area (inch²)	1.39	1.65
Moment of Inertia, I (inch⁴)	1.25	1.48
Radius of Gyration, r (inch)	0.95	0.95
Section Modulus, S (inch³)	0.88	1.03
Plastic Section Modulus, Z(inch³)	1.19	1.41

For SI: 1 inch = 25.4 mm; 1 ksi = 6.89 MPa, 1 ft-lbf =1.36 N-m; 1 lbf =4.45 N.

[1]Dimensional properties are based on bare steel losing 0.036-inch steel thickness and galvanized steel losing 0.13-inch steel thickness as indicated in Section 3.9 of AC358 for a 50-year service life.

TABLE 2—ALLOWABLE CAPACITIES[4] AND RECOMMENDED MAXIMUM INSTALLATION TORQUE FOR HELICAL PILES [1,2]

Allowable Axial Capacity Limits[4] Bare Steel, (Hot-Dip Galvanized)									Recommended Capacity-Torque Ratio[4], K_t (ft⁻¹)	Recommended Max Installation Torque[2], T(ft-lbs)	Ultimate Load at Max Torque Capacity, Qu=TK_t (kips)	Allowable Load at Max Torque Capacity, (kips) Qu/2=Qa
	Compression, (kips)					Tension (kips)	Shear (kips)	Bending (ft-k)				
Unbraced Length, Lu (ft)[1]	kLu= 0	kLu= 5	kLu= 10	kLu= 15	kLu= 20							
0 Couplings-no eccentricity	41.69 (49.44)	18.13 (21.51)	9.68 (11.49)	5.29 (6.28)	3.32 (3.94)	25.01 (29.66)	11.23 (13.44)	2.96 (3.51)	Comp K_t=9	6,818	61.3	30.7
1 Coupling	41.69 (49.44)	14.71 (17.45)	8.61 (10.22)	4.95 (5.88)	3.18 (3.78)				Tension K_t=9	5,979	53.8	26.9
2 Couplings	41.69 (49.44)	11.02 (13.08)	7.20 (8.55)	4.45 (5.28)	2.97 (3.52)							

For SI: 1 inch = 25.4mm; 1 lbf = 1.356 N-m; 1 kip (1000 lbf) = 4.48 kN; 1 in² = 645.2mm²; 1 psi =6.89 kPa

[1]Refer to Section 4.1.2 Pile Shaft Capacity for the description of unbraced length, soft and firm soil conditions.

[2]Capacity ratings include an allowance for corrosion over a minimum 50-year service design life in accordance with Section 3.9 of AC358 and presume the support structure is braced in accordance with IBC Section 1810.2.1 and the lead section will provide sufficient helical capacity to develop the full shaft capacity. See section 4.1.1 entitled Bracket Capacity for applicable limit states that must be evaluated by a registered design professional.

[3]Maximum useable torque for calculating the pile's ultimate capacity using the equation Q=TK_t. Maximum torque applied to the helical pile anytime during installation should not exceed 6818 ft-lbs for the helical piles.

[4]The listed capacity-to-torque ratios can be adjusted to lower values on a case-by-case, if necessary. The listed allowable capacity includes a minimum Factor of Safety (FS) of 2. A higher Factor of Safety may be used to estimate the pile's allowable capacity on a case-by-case basis, if necessary.

TABLE 3—ALLOWABLE CAPACITIES FOR UNDERPINNING BRACKETS

BRACKET ID AND TYPE	PILING DIAMETER (inch)	ALLOWABLE CAPACITY (kips)		
		Compression[1,2,3]	Tension[4]	Lateral[4]
S-3023 Underpinning Bracket	$2^7/_8$	23.9	To be determined by the registered design professional	

For SI: 1 inch = 25.4 mm, 1 kip (1000 lbf) = 4.48 kN.

[1]Load capacity is based on full scale load tests per AC358 with an installed 5'-0" unbraced pile length having a maximum of one coupling per 2024, 2021, 2018 and 2015 IBC Section 1810.2.1. The allowable capacities include a Factor of Safety of 2. Side load bracket must be concentrically loaded and side load bracket plate must be fully engaged with bottom of concrete foundation. Only localized limit states such as mechanical strength of steel components and concrete bearing have been evaluated.

[2]The capacities listed in Table 3 assume the structure is sidesway braced per 2024, 2021, 2018 and 2015 IBC Section 1810.2.2.

[3]The tabulated values are based on installation with normal-weight concrete having a minimum compressive strength of 2500 psi (17.23 MPa).

[4]The tension and lateral load capacity of the side-load brackets must be designed by a registered design professional in accordance with Chapter 18 of the IBC.

PERMIT ROCKSTAR
Reviewed For Compliance
05/14/2026
Ali Marar FL PE92978
ali@permitrockstar.com 904-858-6957

TABLE 4A – ALLOWABLE COMPRESSION CAPACITY FOR NEW CONSTRUCTION BRACKETS[1,2,3,4]

Bracket ID and Type	Steel Type[5]	New Construction Bracket Installation Requirements		Minimum Concrete Cover ASD Compression Capacity (kips)	New Construction Bracket Installation Requirements		Mechanical ASD Design Compression Capacity (kips)
		Min Concrete above Bracket Top Plate (inches)	Min Concrete footing width (inches)		Min Concrete above Bracket Top Plate (inches)	Min Concrete footing width (inches)	
Minimum Concrete Compressive Strength f'c = 2500 PSI for Seismic Design Categories A and B only							
S-3032 6"x6" New Construction Bracket	Bare	4	14	8.91	11	28	41.69
	Galvanized	4	14	8.93	13	31	49.44
S-3033 8"x8" New Construction Bracket	Bare	4	16	10.69	11	29	41.69
	Galvanized	4	16	10.72	12	31	49.44
Minimum Concrete Compressive Strength f'c = 3000 PSI for Seismic Design Categories A through F							
S-3032 6"x6" New Construction Bracket	Bare	4	14	9.76	11	27	41.69
	Galvanized	4	14	9.79	12	30	49.44
S-3033 8"x8" New Construction Bracket	Bare	4	16	11.71	10	28	41.69
	Galvanized	4	16	11.74	11	30	49.44

For SI: 1 inch = 25.4 mm, 1 kip (1000 lbf) = 4.48 kN.

[1] The ASD compressive load capacity is based on the mechanical strength of the steel bracket, concrete punching shear capacity, and concrete bearing strength. The allowable load capacities have been determined assuming unreinforced concrete in accordance with ACI 318.

[2] The capacities listed in Table 3 assume the structure is sidesway braced per 2024, 2021, 2018 and 2015 IBC Section 1810.2.2.

[3] The tabulated values are based on installation with normal-weight concrete having a minimum compressive strength as specified in the table.

[4] The end of the helical shaft must be fully bearing on the bracket place.

[5] Capacities are based on bare steel losing 0.036-inch steel thickness and galvanized steel losing 0.13-inch steel thickness as indicated in Section 3.9 of AC358 for a 50-year service life.

PERMIT ROCKSTAR
Reviewed For Compliance
05/14/2026
AS Manar FL 1752275

TABLE 4B – ALLOWABLE TENSION CAPACITY FOR NEW CONSTRUCTION BRACKETS[1,2,3,4,5]

Bracket Type	Steel Type[5]	New Construction Bracket Installation Requirements		Minimum Concrete Cover ASD Tension Capacity (kips)		New Construction Bracket Installation Requirements			
		Min Concrete below Bracket Top Plate (inches)	Min Concrete footing width (inches)			Min Concrete below Bracket Top Plate (inches)	Min Concrete footing width (inches)	Mechanical ASD Design Tension Capacity (kips)	
Minimum Concrete Compressive Strength f'c = 2500 PSI for Seismic Design Categories A and B only									
S-3032 6"x6" New Construction Bracket	Bare	3	14	1.56		11	27	25.01	
	Galvanized	3	14	1.56		11	28	29.66	
S-3033 8"x8" New Construction Bracket	Bare	3	16	2		10	27	25.01	
	Galvanized	3	16	2.01		11	29	29.66	
Minimum Concrete Compressive Strength f'c = 3000 PSI for Seismic Design Categories A through F									
				SDC A and B[7]	SDC C - F[7,8]			SDC A and B[7]	SDC C - F[7,8]
S-3032 6"x6" New Construction Bracket	Bare	3	14	1.7	1.28	10	26	25.01	18.76
	Galvanized	3	14	1.71	1.28	11	27	29.66	22.25
S-3033 8"x8" New Construction Bracket	Bare	3	16	2.16	1.65	9	26	25.01	18.76
	Galvanized	3	16	2.2	1.65	10	28	29.66	22.25

For SI: 1 inch = 25.4 mm, 1 kip (1000 lbf) = 4.48 kN.

[1] The ASD tension load capacity is based on the mechanical strength of the steel bracket, concrete punching shear capacity, and concrete bearing strength. The allowable load capacities have been determined assuming unreinforced concrete in accordance with ACI 318. Prying action at the bracket top plate has not been considered and must be considered by registered design professional on a case-specific basis.

[2] The capacities listed in Table 3 assume the structure is sidesway braced per 2024, 2021, 2018 and 2015 IBC Section 1810.2.2.

[3] The tabulated values are based on installation with normal-weight concrete having a minimum compressive strength as specified in the table.

[4] The capacity is based on using (2) 7/8-inch through bolts as described in Section 3.2.2.3 of this report.

[5] The end of the helical shaft must be fully bearing on the bracket place.

[6] Capacities are based on bare steel losing 0.036-inch steel thickness and galvanized steel losing 0.13-inch steel thickness as indicated in Section 3.9 of AC358 for a 50-year service life.

[7] Registered design professional must consider design seismic forces including an overstrength factor of 3 in accordance with section H in ASCE 7 Table 12-2.1, Equations 12.4-4, 12.4-6 and 12.4-7.

[8] Concrete has been evaluated in cases of axial tension and shear assuming the concrete has cracked and considering uplift resistance.

TABLE 4C – ALLOWABLE LATERAL CAPACITY FOR NEW CONSTRUCTION BRACKETS[1,2,3]

Bracket Type	Steel Type[4]	New Construction Bracket Installation Requirements		Minimum Concrete Cover ASD Lateral Capacity (kips)		New Construction Bracket Installation Requirements		Mechanical ASD Design Tension Capacity (kips)	
		Min Concrete below Bracket Top Plate (inches)	Min Concrete footing width (inches)			Min Concrete below Bracket Top Plate (inches)	Min Concrete footing width (inches)		
Minimum Concrete Compressive Strength f'c = 2500 PSI for Seismic Design Categories A and B only									
S-3032 6"x6" New Construction Bracket	Bare	3	14	1.28		11	27	8.8	
	Galvanized	3	14	1.28		11	28	9.16	
S-3033 8"x8" New Construction Bracket	Bare	3	16	1.52		10	27	8.29	
	Galvanized	3	16	1.52		11	29	9.52	
Minimum Concrete Compressive Strength f'c = 3000 PSI for Seismic Design Categories A through F									
				SDC A and B[5]	SDC C - F[5,6]			SDC A and B[5]	SDC C - F[5,6]
S-3032 6"x6" New Construction Bracket	Bare	3	14	1.4	1	10	26	8.71	6.22
	Galvanized	3	14	1.4	1	11	27	9.63	6.88
S-3033 8"x8" New Construction Bracket	Bare	3	16	1.66	1.19	9	26	8.14	5.82
	Galvanized	3	16	1.66	1.19	10	28	9.46	6.76

For SI: 1 inch = 25.4 mm, 1 kip (1000 lbf) = 4.48 kN.

[1] The ASD lateral load capacity is based on the mechanical strength of the steel bracket and concrete bearing in accordance with ACI 318, and bracket bearing in accordance with ACI 318. The allowable load capacities have been determined assuming concrete is reinforced with at least one No. 4 bar or greater between anchor and the edge, and with the reinforcement enclosed within stirrups spaced at not more than 4 inches in accordance with ACI 318-19 Table 17.7.2.5.1 for $\psi_{c,V}$ = 1.4. In the case where the concrete is not reinforced with the minimum assumed reinforcement, the tabulated capacity shall be multiplied by 0.70 for concrete without supplementary reinforcement/with edge reinforcement smaller than a No. 4, or the tabulated capacity shall be multiplied by 0.85 for concrete with reinforcement of at least a No. 4 bar or greater between the anchor and the edge.*

[2] The capacities listed in Table 3 assume the structure is sidesway braced per 2024, 2021, 2018 and 2015 IBC Section 1810.2.2.

[3] The tabulated values are based on installation with normal-weight concrete having a minimum compressive strength as specified in the table.

[4] Capacities are based on bare steel losing 0.036-inch steel thickness and galvanized steel losing 0.13-inch steel thickness as indicated in Section 3.9 of AC358 for a 50-year service life.

[5] Registered design professional must consider design seismic forces including an overstrength factor of 3 in accordance with section H in ASCE 7 Table 12-2.1, Equations 12.4-4, 12.4-6 and 12.4-7.

[6] Concrete has been evaluated in cases of axial tension and shear assuming the concrete has cracked and considering uplift resistance.

TABLE 5—ALLOWABLE TENSION AND COMPRESSION CAPACITY FOR HELICAL PLATES (KIPS)

Helical Plate Diameter[1] (inches)	Helical Pile Shaft Diameter (inches)
	$2^7/_8$
8	41.3
10	29.9
12	37.5
14	51.1

For SI: 1 inch = 25.4 mm; 1 kip = 1000 lbf = 4.45 kN.

[1] Allowable load values are for helical plates made from $^5/_8$-inch thick steel.

PERMIT ROCKSTAR
Reviewed For Compliance
05/14/2026
Ali Marar FL PE92978
ali@permitrockstar.com 904-656-6957

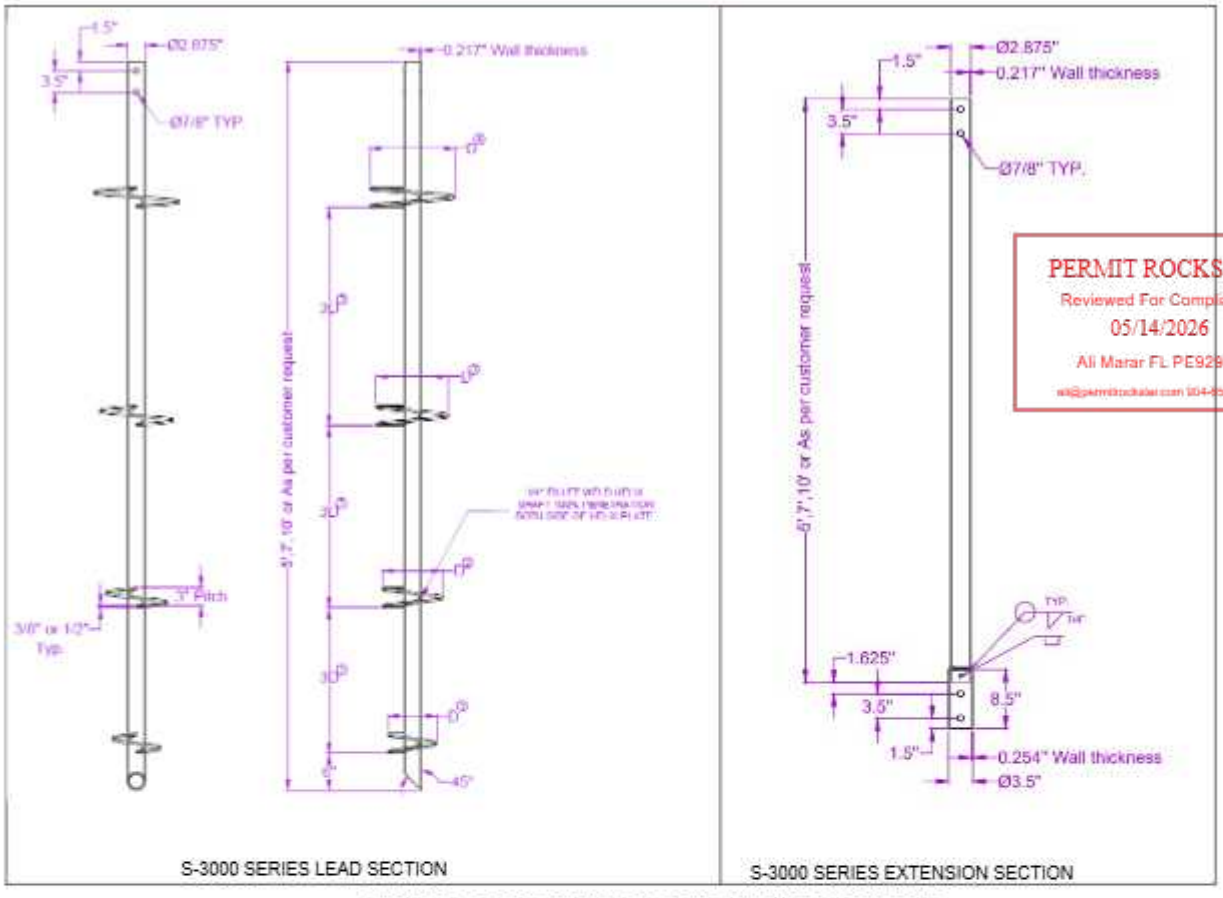

PERMIT ROCKSTAR
Reviewed For Compliance
05/14/2026
Ali Marar FL PE92978

FIGURE 1—S-3000 SERIES LEAD AND EXTENSION SECTIONS

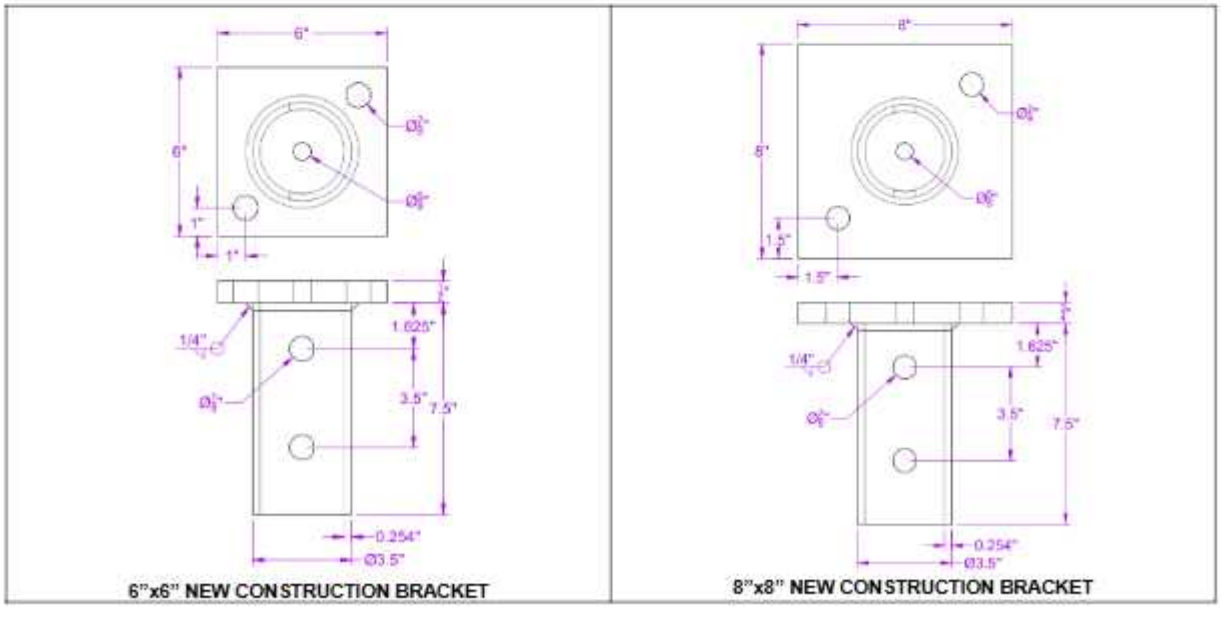

FIGURE 2—NEW CONSTRUCTION BRACKET

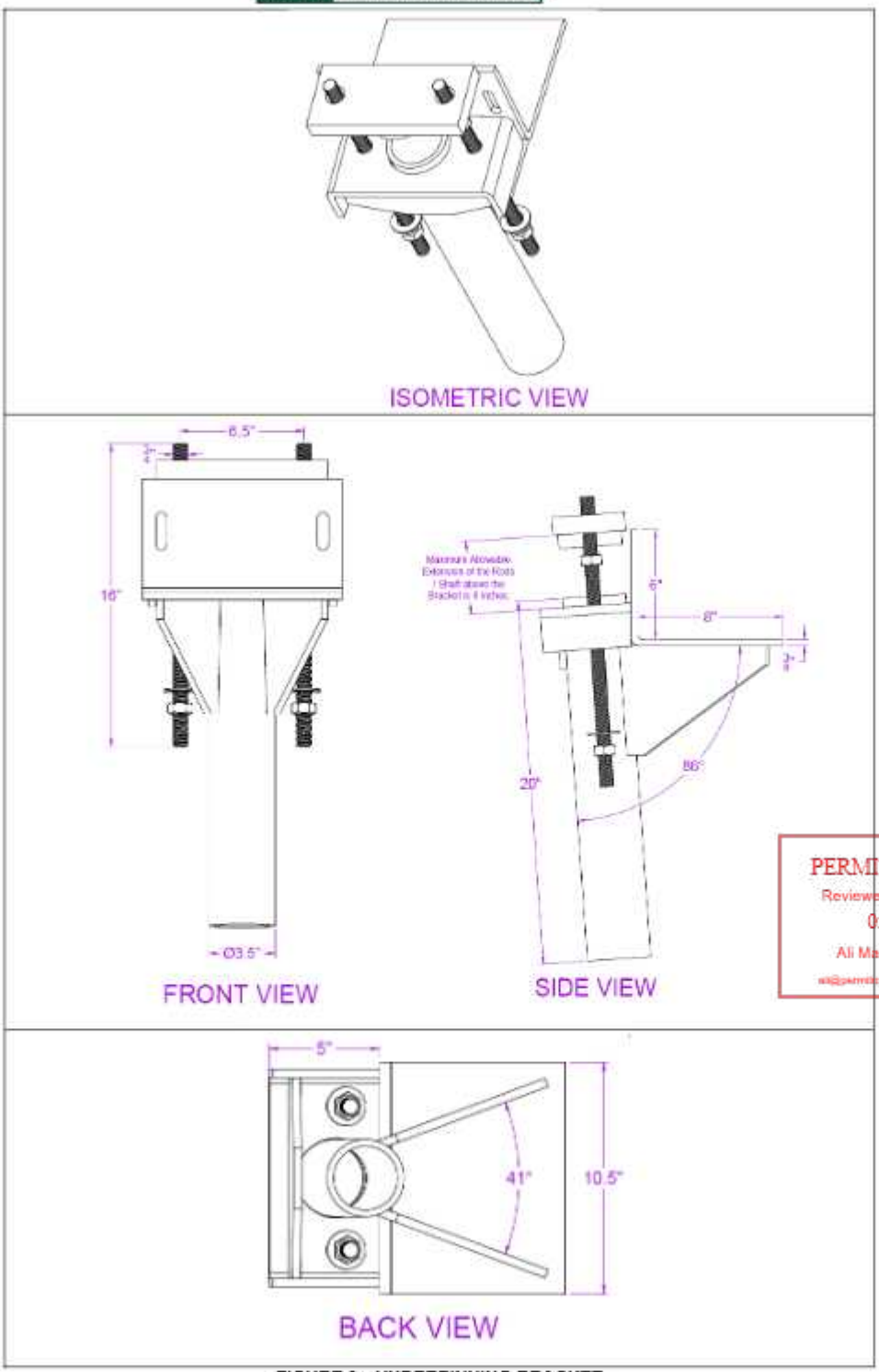

PERMIT ROCKSTAR
Reviewed For Compliance
05/14/2026
Ali Marar FL PE92978

FIGURE 3—UNDERPINNING BRACKET

DIVISION: 31 00 00—EARTHWORK
Section: 31 63 00—Bored Piles

REPORT HOLDER:

NSI (INDIA) LTD.

EVALUATION SUBJECT:

HELICAL FOUNDATION SYSTEM

PERMIT ROCKSTAR
Reviewed For Compliance
05/14/2026
Ali Marar FL PE92978
ali@permitrockstar.com 904-656-6957

1.0 REPORT PURPOSE AND SCOPE

Purpose:

The purpose of this evaluation report supplement is to indicate that the Helical Foundation System, described in ICC-ES evaluation report ESR-5473, has also been evaluated for compliance with the codes noted below as adopted by the Los Angeles Department of Building and Safety (LADBS).

Applicable code editions:

- 2023 *City of Los Angeles Building Code* (LABC)
- 2023 *City of Los Angeles Residential Code* (LARC)

2.0 CONCLUSIONS

The Helical Foundation System, described in Sections 2.0 through 7.0 of the evaluation report ESR-5473, complies with the LABC Section 1810, and is subject to the conditions of use described in this supplement.

3.0 CONDITIONS OF USE

The Helical Foundation System described in this evaluation report supplement must comply with all of the following conditions:

- All applicable sections in the evaluation report ESR-5473.
- The design, installation, conditions of use and identification of the helical foundation system are in accordance with the 2021 *International Building Code®* (IBC) provisions noted in the evaluation report ESR-5473.
- The design, installation and inspection are in accordance with additional requirements of LABC Chapters 16 and 17, Sections 1803 and 1810.3.1.5, as applicable.
- The helical foundation system may be used in new construction and resist horizontal loads as an exception to LABC Section 1810.3.1.5, provided the following conditions are followed:
  - The helical foundation system must comply with the provisions in ESR-5473 that apply to installation in Seismic Design Categories D, E and F.
  - A soil investigation report as required by LABC Section 1803.1 shall be submitted to the Los Angeles Department of Building and Safety Grading Division for review and approval for each site where helical piles are installed.
  - For installation of helical piles under LABC covered structures, axial and lateral (where used) capacities of helical piles shall be determined in accordance with LABC Section 1810.3.3 by at least two project specific preproduction tests for each soil profile, size and depth of helical pile. At least two percent of all production piles shall be proof tested to the design strength, determined by using load combinations in LABC Section 1605.2.
  - For installation of helical piles under LARC covered structures, axial and lateral (where used) capacities of helical piles shall be determined in accordance with LABC Section 1810.3.3 by at least one project specific preproduction tests for each soil profile, size and depth of helical pile. At least two percent of all production piles shall be proof tested to the design strength determined by using load combinations in LABC Section 1605.2.

ICC-ES Evaluation Reports are not to be construed as representing aesthetics or any other attributes not specifically addressed, nor are they to be construed as an endorsement of the subject of the report or a recommendation for its use. There is no warranty by ICC Evaluation Service, LLC, express or implied, as to any finding or other matter in this report, or as to any product covered by the report.

Copyright © 2025 ICC Evaluation Service, LLC. All rights reserved.

- Helical piles installation shall be performed under the inspection and approval of the soils engineer and the continuous inspection and approval of the deputy grading inspector. The information recorded shall include installation equipment used, pile dimensions, tip elevations, final depth, final installation torque and other pertinent installation data as required by soils engineer.
- Helical piles shall satisfy corrosion resistance requirements of AC358. In addition, all helical piles materials that are subject to corrosion shall include at least 1/16-inch corrosion allowance.
- The allowable axial design load must comply with LABC Section 1810.3.3.1.9.
- The allowable lateral load must comply with ESR-5473. The seismic demand force must not exceed the allowable lateral load reported in ESR-5473.

- Under the LARC, an engineered design in accordance with LARC Section R301.1.3 must be submitted.

This supplement expires concurrently with the evaluation report, issued July 2025.

PERMIT ROCKSTAR
Reviewed For Compliance
05/14/2026
Ali Marar FL PE92978
ali@permitrockstar.com 904-656-6957

DIVISION: 31 00 00—EARTHWORK
Section: 31 63 00—Bored Piles

REPORT HOLDER:

NSI (INDIA) LTD.

EVALUATION SUBJECT:

HELICAL FOUNDATION SYSTEMS

PERMIT ROCKSTAR
Reviewed For Compliance
05/14/2026
Ali Marar FL PE92978
ali@permitrockstar.com 904-656-6957

1.0 REPORT PURPOSE AND SCOPE

Purpose:

The purpose of this evaluation report supplement is to indicate that the Helical Pile Foundation Systems, described in ICC-ES evaluation report ESR-5473, have also been evaluated for compliance with the code noted below.

Applicable code edition:

- 2022 *California Building Code* (CBC)

For evaluation of applicable Chapters adopted by the California Office of Statewide Health Planning and Development (OSHPD) AKA: California Department of Health Care Access and Information (HCAI) and the Division of State Architect (DSA), see Sections 2.1.1 and 2.1.2 below.

- 2022 *California Residential Code* (CRC)

2.0 CONCLUSIONS

2.1 CBC:

The Helical Pile Foundation Systems, described in Sections 2.0 through 7.0 of the evaluation report ESR-5473, comply with CBC Chapter 18, provided the design and installation are in accordance with the 2021 *International Building Code®* (IBC) provisions noted in the evaluation report and the additional requirements of CBC Chapters 16, 17 and 18, as applicable.

2.1.1 OSHPD:

The applicable OSHPD Sections and Chapters of the CBC are beyond the scope of this supplement.

2.1.2 DSA:

The applicable DSA Sections and Chapters of the CBC are beyond the scope of this supplement.

2.2 CRC:

The Helical Pile Foundation Systems, described in Sections 2.0 through 7.0 of the evaluation report ESR-5473, comply with CRC Chapter 3, provided the design and installation are in accordance with the 2021 *International Residential Code®* (IRC) provisions noted in the evaluation report.

This supplement expires concurrently with the evaluation report, issued July 2025.

ICC-ES Evaluation Reports are not to be construed as representing aesthetics or any other attributes not specifically addressed, nor are they to be construed as an endorsement of the subject of the report or a recommendation for its use. There is no warranty by ICC Evaluation Service, LLC, express or implied, as to any finding or other matter in this report, or as to any product covered by the report.

Copyright © 2025 ICC Evaluation Service, LLC. All rights reserved.

DIVISION: 31 00 00—EARTHWORK
Section: 31 63 00—Bored Piles

REPORT HOLDER:

NSI (INDIA) LTD.

EVALUATION SUBJECT:

HELICAL FOUNDATION SYSTEMS

PERMIT ROCKSTAR
Reviewed For Compliance
05/14/2026
Ali Marar FL PE92978
ali@permitrockstar.com 904-656-6957

1.0 REPORT PURPOSE AND SCOPE

Purpose:

The purpose of this evaluation report supplement is to indicate that Helical Pile Systems, described in ICC-ES evaluation report ESR-5473, have also been evaluated for compliance with the code noted below.

Applicable code editions:

- 2023 *Florida Building Code—Building*
- 2023 *Florida Residential Code—Building*

2.0 CONCLUSIONS

The Helical Pile Systems, described in Sections 2.0 through 7.0 of ICC-ES evaluation report ESR-5473, comply with the *Florida Building Code—Building* and *Florida Building Code—Residential*. The design requirements must be determined in accordance with the *Florida Building Code—Building* or *Florida Building Code—Residential*, as applicable. The installation requirements noted in ICC-ES evaluation report ESR-5473 for the 2021 *International Building Code®* meet the requirements of the *Florida Building Code—Building* or *Florida Building Code—Residential*, as applicable except as follows:

- The allowable axial compressive or tensile load of the helical pile system must be based on Section 4.1 of ESR-5473.
- Installation of helical piles must comply with Section 4.2 of this report and *Florida Building Code—Building* Section 1810.4.11.

Use of the Helical Pile Systems for compliance with the High-Velocity Hurricane Zone provisions of the *Florida Building Code—Building* or *Florida Building Code—Residential* has not been evaluated and is outside the scope of this supplemental report.

For products falling under Florida Rule 61G20-3, verification that the report holder's quality assurance program is audited by a quality assurance entity approved by the Florida Building Commission for the type of inspections being conducted is the responsibility of an approved validation entity (or the code official when the report holder does not possess an approval by the Commission). Florida Rule 61G20-3 is applicable to products and/or systems which comprise the building envelope and structural frame for compliance with the structural requirements of the Florida Building Code.

This supplement expires concurrently with the evaluation report, issued July 2025.

ICC-ES Evaluation Reports are not to be construed as representing aesthetics or any other attributes not specifically addressed, nor are they to be construed as an endorsement of the subject of the report or a recommendation for its use. There is no warranty by ICC Evaluation Service, LLC, express or implied, as to any finding or other matter in this report, or as to any product covered by the report.

Copyright © 2025 ICC Evaluation Service, LLC. All rights reserved.

Groundworks

Helical Pier Drive Head Pressure vs Torque Tables

Differential Pressure (psi)	Pro-Dig					Digga		Pengo		Eskridge					Dynamic Oil	Bellter
	L6H3 with ball	L6H3 no ball	X7H3	X8H3C	X8H3	TALS - Low Pressure	M34-10	H3-6	H3-7	3010 (3k)	TM8 (12k) Low Torque	TM8 (12k) High Torque	TM1 (20k) Low Torque	TM1 (20k) High Torque	SA3-L	LC-600
500	1,267	1,267	1,274	1,414	1,611	1,194	1,746	1,349	1,501	1,522	655	2,505	1,432	3,493	1,326	419
600	1,520	1,520	1,529	1,696	1,933	1,433	2,095	1,619	1,801	1,826	826	3,010	1,734	4,328	1,591	502
700	1,774	1,774	1,784	1,979	2,255	1,672	2,444	1,889	2,103	2,131	957	3,531	2,036	4,963	1,856	586
800	2,027	2,027	2,038	2,262	2,577	1,911	2,793	2,159	2,402	2,435	1,107	4,043	2,337	5,699	2,122	670
900	2,281	2,281	2,293	2,544	2,899	2,150	3,141	2,429	2,704	2,740	1,247	4,555	2,639	6,434	2,387	753
1000	2,534	2,534	2,548	2,827	3,221	2,389	3,493	2,699	3,004	3,044	1,387	5,067	2,940	7,169	2,652	837
1100	2,787	2,787	2,803	3,110	3,543	2,628	3,842	2,969	3,303	3,348	1,527	5,579	3,242	7,903	2,917	921
1200	3,041	3,041	3,058	3,392	3,865	2,866	4,191	3,240	3,606	3,653	1,667	6,090	3,543	8,640	3,182	1,004
1300	3,294	3,294	3,312	3,675	4,187	3,105	4,540	3,510	3,905	3,957	1,807	6,602	3,845	9,375	3,446	1,088
1400	3,548	3,548	3,567	3,958	4,509	3,344	4,889	3,780	4,207	4,262	1,947	7,114	4,147	10,111	3,713	1,172
1500	3,801	3,801	3,822	4,241	4,832	3,583	5,239	4,050	4,507	4,566	2,087	7,626	4,448	10,846	3,978	1,256
1600	4,054	4,054	4,077	4,523	5,154	3,822	5,588	4,320	4,808	4,870	2,227	8,137	4,750	11,581	4,243	1,339
1700	4,308	4,308	4,332	4,806	5,476	4,061	5,937	4,590	5,108	5,175	2,367	8,649	5,051	12,317	4,508	1,423
1800	4,561	4,561	4,586	5,089	5,798	4,299	6,286	4,860	5,409		2,507	9,161	5,353	13,052	4,774	1,507
1900	4,815	4,815	4,841	5,371	6,120	4,538	6,636	5,130	5,709		2,647	9,673	5,654	13,787	5,039	1,590
2000	5,068	5,068	5,096	5,654	6,442	4,777	6,985	5,400	6,010		2,787	10,185	5,956	14,523	5,304	1,674
2100	5,321	5,321	5,351	5,937	6,764	5,016	7,334	5,670	6,310		2,925	10,696	6,257	15,258	5,569	1,758
2200	5,575	5,575	5,606	6,219	7,086	5,255	7,684	5,940	6,611		3,065	11,208	6,559	15,993	5,834	1,841
2300	5,828	5,828	5,860	6,502	7,408	5,494	8,033	6,210	6,911		3,205	11,720	6,861	16,729	6,100	1,925
2400	6,082	6,082	6,115	6,785	7,730	5,733	8,383	6,480	7,212		3,345	12,232	7,162	17,464	6,365	2,009
2500	6,335	6,335	6,370	7,068	8,053	5,971	8,732	6,750	7,512				7,464	18,199	6,630	2,093
2600			6,625	7,350	8,375	6,210	9,081						7,765	18,935		2,176
2700			6,880	7,633	8,697	6,449	9,430						8,067	19,670		2,260
2800			7,134	7,916	9,019	6,688	9,779						8,368	20,405		2,344
2900			7,389	8,198	9,341	6,927	10,129									2,427
3000			7,644	8,481	9,663	7,166	10,478									2,511
Max size	5"	5"	5.5"		5.5"	5.5"	5.5"	5"	5"	5"	5.5"		5"		5"	5"
Max PSI	3200psi	3200psi	3000psi	3000psi	3000psi	3000psi	3000psi	3200psi	3200psi	3400psi	3400psi		3700psi		3200psi	3000psi
GPM	3-10 gpm	3-10 gpm	10-60 gpm	9-60 gpm	10-60 gpm		7-12 gpm	10-60 gpm	10-60 gpm	32 gpm	40 gpm		40 gpm		10-30gpm	12-30gpm

Notes:

1. Values in this table are expressed in foot-pounds.
2. - Max torque for NSI 1.875 helical pier
3. - Max torque for Grip-Tite 1.875 helical Pier
4. - Max torque for ICF 1.875 Helical Pier
5. - Max torque for MAI 1.875 Helical Pier
6. - Max torque for both NSI and MAI Helical Pier

PERMIT ROCKSTAR

Reviewed For Compliance

05/14/2026

Ali Marar FL PE92978

ali@permitrockstar.com 904-656-6957