FIELD "AS-BUILT" NOTES

ADVANCED FLOOR PRODUCTS

THE ENTIRE FLOOR SURFACE WILL BE FINISHED TO A HIGH GLOSS LEVEL 3 SHINE.

DEFINITION OF EXPECTED SHINE
HIGH GLOSS : REFLECTIVE SHINE IN WHICH, AT A DISTANCE OF 30', THE REFLECTIVITY IS CLEARLY DEFINED.
1) THE ENTIRE FLOOR AREA SURFACE IS THE ONLY AREA TO RECEIVE POLISHING
2) THE RECEIVING AREA, OFFICES AND RESTROOMS WILL BE FINISHED BY THE LANDLORDS GC WITH SILICONE ACRYLIC CONCRETE SEALER
3) POLYUREA JOINT FILL (STANDARD GRAY) WILL BE REQUIRED.
4) CONTROL JOINTS INSTALLED INDICATED OF THE FOUNDATION PLAN AND IN ACCORDANCE WITH THR "SLAB ON GRADE" NOTES ON SHEET S1

PROJECTS WILL BE COMPLETED USING ONLY 'ADVANCED FLOOR PRODUCTS' PRODUCTS.
PRODUCT REQUIREMENTS
1) RETROPLATE 99 (NO SUBSTITUTE DENSIFIER) 55 GALS PER STORE.
2) RETROGUARD 2-5 GALLON PAILS
3) AMERIPOLISH EDGE TINT (PART A&B) (MIDNIGHT BLACK)
4) STANDARD POLY UREA GRAY JOINT FILL (APPLICATORS CHOICE)
5) DIAMONDS PURCHASED IN SETS TO EQUIP THE PARTICULAR MACHINE. GRITS NEEDED:
A) 40, 50 OR 80 METAL DIAMONDS
B) 100/120, 200/220, 400, 800 RESIN DIAMONDS
C) 800, 1500 AND 3000 GRIT TWISTER PAD IS TO BE USED TO BURNISH.

ALL WORK WILL BE COMPLETED PER THESE SPECIFICATIONS.

QUALIFICATIONS
1) ALL APPLICATORS OF THE RETROPLATE SYSTEM MUST HAVE THE WORK EXPERIENCE AND BE CERTIFIED BY ADVANCED FLOOR PRODUCTS OF SPRINGVILLE, UTAH.
2) APPLICATOR MUST POSSESS A LETTER OF CERTIFICATION FROM ADVANCED FLOOR PRODUCTS 1203 W. SPRING CREEK PLACE, SPRINGVILLE, UT 84663.
A) THE APPLICATOR MUST HAVE SATISFACTORILY INSTALLED RETROPLATE IN A MINIMUM OF 5 PROJECTS OF AT LEAST 6,000 SQ FEET.
B) THE CERTIFIED PERSON IN THE COMPANY MUST BE PRESENT ON THE JOB DURING ALL PHASES OF THE INSTALLATION.
C) APPLICATOR WILL PROVIDE THE RECOMMENDED GRINDING MACHINES AND ADVANCED FLOOR PRODUCTS DIAMONDS
3) EQUIPMENT:

A) MINIMUM NUMBER OF MACHINES NEED FOR THE PROJECTS (2-32" PLANETARY)
B) ADDITIONAL EQUIPMENT WILL PROVIDE THE ELECTRICAL GENERATORS AS NECESSARY
C) POLISH TO THE REQUIRED LEVEL 3 HIGH GLOSS SHINE.

SCOPE OF WORK:
THE FOLLOWING RETROPLATE PROCESS WILL BE USED AS A GUIDE FOR RETROPLATE PROCESS AND IS THE MANUFACTURERS APPLICATION RECOMMENDATION. KEEP IN MIND THAT THE APPLICATOR WILL FINISH THE FLOOR TO A NICE LEVEL 3 HIGH GLOSS SHINE. APPLICATORS WILL ALTER THE STEPS AS NECESSARY TO ACHIEVE THE REQUIRED LEVEL 3 HIGH GLOSS SHINE. (SEE DEFINITION OF SHINE)

1) START THE GRIND USING 40, 50 OR 80 GRIT METAL PAD DEPENDING ON THE NEED. (MULTIPLE PASSES WILL BE REQUIRED FOR EACH STEP) MAKE SURE THAT THE PREVIOUS "SCRATCH PATTERN" IS TAKEN OUT BEFORE PROCEEDING.
2) CLEAN THE FLOOR.
3) GRIND FLOOR USING 100/120 GRIT PAD.
4) CLEAN THE FLOOR
5) GRIND THE FLOOR WITH A 200/220 GRIT PAD.
6) CLEAN FLOOR
7) APPLY RETROPLATE 99 TO THE SURFACE AT 200 SQ FT PER GALLON, SCRUBBING PRODUCT IN INTO FLOOR AND ALLOWING PRODUCT TO SOAK UNTIL TURNING SLICK. IF IT BECOMES STICKY, DAMPEN THE STICKY AREAS WITH WATER AND SCRUB IN, LEAVING THE PRODUCT ON THE FLOOR FOR 60 MINUTES.
8) CLEAN UP EXCESSIVE RETROPLATE 99. LET THE FLOOR DRY, OVERNIGHT IF POSSIBLE.
9) CONTINUE THE POLISHING PROCESS USING 400 AND 800 GRIT PADS. (800/1500/3000 GRIT TWISTER PAD, MULTIPLE PASSES, TO FINISH.)
10) AMERIPOLISH EDGE TINT (MIDNIGHT BLACK) WILL BE APPLIED AROUND THE PERIMETER OF THE SALES FLOOR AND HALL EXTENDING OUT 4 INCHES.
11) EDGE TINT WILL BE APPLIED USING A PAASCHE SPRAYER AT 40PSI.
12) EDGE TINT WILL BE APPLIED WITH A CUT OFF LINE UNDER THE DOOR EDGE AT THE RECEIVING, OFFICE AND RESTROOM ENTRANCES.
13) CHASE, CLEAN AND FILL APPROXIMATELY 540 LINEAR FEET OF JOINTS WITH STANDARD GRAY POLYUREA JOINT FILL.
14) APPLY RETROGUARD SEALER TO THE ENTIRE SALES FLOOR AND HALL SURFACE
AT A RATE OF 1200-1500 FT PER GALLON.

FLOORS WILL BE FINISHED TO A MINIMUM LEVEL 3 HIGH GLOSS SHINE
1) HIGH GLOSS: REFLECTIVE SHINE IN WHICH, AT A DISTANCE OF 30', THE REFLECTIVITY IS CLEARLY DEFINED.
2) SAMPLE PHOTOS ATTACHED OF REQUIRED RESULTS

CONCRETE FLOOR CONDITIONS:
1) SEALING, HARDENING AND POLISHING OF CONCRETE SURFACE.
A) CONCRETE MUST BE IN PLACE A MINIMUM OF 28 DAYS OR AS DIRECTED BY THE MANUFACTURER BEFORE APPLICATION CAN BEGIN.
B) CONCRETE FLOOR WILL BE FINISHED TO A MINIMUM FF AND FL OF 40 +/- 5.
C) ONLY A CERTIFIED APPLICATOR SHALL APPLY RETROPLATE 99. APPLICABLE PROCEDURES MUST BE FOLLOWED AS RECOMMENDED BY THE PRODUCT MANUFACTURER AND AS REQUIRED TO MATCH APPROVED TEST SAMPLE.
D) POLISH TO THE REQUIRED LEVEL 3 HIGH GLOSS SHINE.

WORKMANSHIP AND CLEANING:
1) THE PREMISES SHALL BE KEPT CLEAN AND FREE OF DEBRIS AT ALL TIMES.
2) REMOVE SPATTER FROM ADJOINING SURFACES.
3) REMOVE DEBRIS FROM JOBSITE. DISPOSE OF MATERIALS IN SEPARATE, CLOSED CONTAINERS IN ACCORDANCE WITH LOCAL REGULATIONS.
4) UPON COMPLETION OF THE INSTALLATION OF THE RETROPLATE SYSTEM, THE APPLICATOR WILL MEET WITH THE SUPERVISOR OF CONSTRUCTION AND / OR THE DOLLAR TREE CONSTRUCTION MANAGER. THEY WILL WALK THROUGH AND WILL SIGN OFF THAT THE WORK IS SATISFACTORY.

GENERAL STRUCTURAL NOTES

G E N E R A L:

1. THE DRAWINGS ARE INTENDED TO SHOW THE GENERAL ARRANGEMENT, DESIGN AND EXTENT OF THE WORK AND ARE PARTIALLY DIAGRAMMATIC. THEY ARE NOT INTENDED TO BE SCALED FOR ROUGH-IN MEASUREMENTS, OR TO SERVE AS SHOP DRAWINGS OR PORTIONS THEREOF.

2. ALL DETAILS AND SECTIONS SHOWN ON THE DRAWINGS ARE INTENDED TO BE TYPICAL AND SHALL BE CONSTRUED TO APPLY TO ANY SIMILAR SITUATION ELSEWHERE ON THE PROJECT, EXCEPT WHERE A DIFFERENT DETAIL OR SECTION IS SHOWN.

3. PRIOR TO START OF CONSTRUCTION, THE CONTRACTOR AND ALL THE SUBCONTRACTORS SHALL VERIFY ALL GRADES, LINES, LEVELS, DIMENSIONS AND COORDINATE EXISTING CONDITIONS AT THE JOB SITE WITH THE PLANS AND SPECIFICATIONS. THEY SHALL REPORT ANY INCONSISTENCIES OR ERRORS IN THE ABOVE TO THE ARCHITECT/ENGINEER BEFORE COMMENCING WORK. THE CONTRACTOR AND HIS SUBCONTRACTORS SHALL LAY OUT THEIR WORK FROM ESTABLISHED REFERENCE POINTS AND BE RESPONSIBLE FOR ALL LINES, ELEVATIONS AND MEASUREMENTS IN CONNECTION WITH THEIR WORK.

4. IF ANY ERRORS OR OMISSIONS APPEAR IN THE DRAWINGS, GENERAL NOTES OR OTHER DOCUMENTS, THE CONTRACTOR SHALL NOTIFY THE ARCHITECT IN WRITING OF SUCH OMISSION OR ERROR PRIOR TO PROCEEDING WITH ANY WORK WHICH APPEARS IN QUESTION. IN THE EVENT OF THE CONTRACTOR'S FAILING TO GIVE SUCH AN ADVANCED NOTICE, HE SHALL BE HELD RESPONSIBLE FOR THE RESULTS OF ANY SUCH ERRORS OR OMISSIONS AND THE COST OF RECTIFYING THE SAME.

5. THE CONTRACTOR SHALL USE THE STRUCTURAL DRAWINGS AND SPECIFICATIONS TOGETHER WITH THE ARCHITECTURAL, MECHANICAL, ELECTRICAL AND OTHER TRADE DRAWINGS AND SHOP DRAWINGS, TO LOCATE DEPRESSED SLABS, SLOPES, DRAINS, OUTLETS, RECESSES, OPENINGS, BOLT SETTING, SLEEVES, DIMENSIONS, ETC. NOTIFY ARCHITECT/ENGINEER, IN WRITING, OF ANY POTENTIAL CONFLICTS BEFORE PROCEEDING WITH THE WORK.

SHOP DRAWINGS AND DELEGATED ENGINEERING:

1. ALL SHOP DRAWINGS SHALL BE SUBMITTED FOR ARCHITECT'S REVIEW ONLY AFTER THEY HAVE BEEN THOROUGHLY REVIEWED BY THE CONTRACTOR FOR CONSTRUCTION METHODS, DIMENSIONS AND OTHER TRADE REQUIREMENTS, AND STAMPED WITH THE CONTRACTOR'S APPROVAL STAMP. THE ARCHITECT ASSUMES NO RESPONSIBILITY FOR DIMENSIONS, QUANTITIES, ENGINEERING DESIGN BY DELEGATED ENGINEERS, ERRORS OR OMISSIONS AS A RESULT OF REVIEWING ANY SHOP DRAWINGS. ANY ERRORS OR OMISSIONS MUST BE MADE GOOD BY THE CONTRACTOR, IRRESPECTIVE OF RECEIPT, CHECKING OR REVIEW OF DRAWINGS BY THE ENGINEER AND EVEN THOUGH WORK IS DONE IN ACCORDANCE WITH SUCH DRAWINGS.

2. BEFORE STRUCTURAL INSPECTIONS CAN BE MADE ON A PORTION OF THE STRUCTURE, ALL RELATED SHOP DRAWINGS, DELEGATED ENGINEERING, PRODUCT APPROVAL, MANUFACTURER'S DATA AND OTHER RELATED INFORMATION, MUST BE REVIEWED AND ACCEPTED BY THE ARCHITECT-OF-RECORD AND APPROVED BY THE BUILDING DEPARTMENT.

3. SHOP DRAWINGS SHALL CONTAIN ALL INFORMATION SHOWN ON THE STRUCTURAL PLANS (RELATED TO THE DELEGATED DESIGN) INCLUDING ALL DESIGN LOADS, IN ADDITION TO THE INFORMATION REQUIRED BY THE DELEGATED ENGINEER'S DESIGN.

4. ARCHITECT WILL REVIEW ALL SUBMITTED SHOP DRAWINGS, PREPARED AND SIGNED AND SEALED BY THE CONTRACTOR'S DELEGATED ENGINEER, ONLY FOR GENERAL COMPLIANCE WITH THE DESIGN INTENT, REQUIRED LOADING AND COORDINATION WITH THE STRUCTURAL DESIGN.

5. CONTRACTOR SHALL SUBMIT TO THE ARCHITECT TWO SETS OF BLUE PRINTS OF THE STRUCTURAL SHOP DRAWINGS FOR ARCHITECT REVIEW, BEFORE STARTING FABRICATION. THE ARCHITECT WILL RETURN ONE MARKED UP AND STAMPED COPY TO THE CONTRACTOR. THE MARKED-UP COPY SHALL BE USED TO MAKE THE PRINTS REQUIRED FOR SHOP DRAWING DISTRIBUTION.

CONSTRUCTION MEANS AND METHODS:

1. THE CONSTRUCTION MEANS, METHODS, TECHNIQUES, SEQUENCE OR PROCEDURES, SAFETY PRECAUTIONS, SHORES, RESHORES, LATERAL BRACING AND PROGRAMS IN CONNECTION WITH THE PROJECT, ARE THE SOLE RESPONSIBILITY OF THE CONTRACTOR. OUR SERVICES DO NOT GUARANTEE NOR ASSURE LIABILITY FOR THE JOB SAFETY, TEMPORARY SHORING AND BRACING AND THE PERFORMANCE OF THE CONTRACTOR.

2. THE CONTRACTOR IS RESPONSIBLE AND SHALL COMPLY WITH THE SAFETY REQUIREMENTS OF THE 2004 FLORIDA BUILDING CODE AND APPLICABLE LOCAL, STATE AND FEDERAL LAWS.

3. PROVIDE ALL SHORING, BRACING AND SHEETING AS REQUIRED FOR SAFETY, STRUCTURAL STABILITY AND FOR THE PROPER EXECUTION OF THE WORK. REMOVE WHEN WORK IS COMPLETED.

4. PROVIDE AND MAINTAIN GUARD LIGHTS AT ALL BARRICADES, RAILINGS, OBSTRUCTIONS IN THE STREETS, ROADS OR SIDEWALKS AND ALL TRENCHES OR PITS ADJACENT TO PUBLIC WALKS OR ROADS.

5. AT ALL TIMES, PROVIDE PROTECTION AGAINST WEATHER (RAIN, WIND, STORMS OR THE SUN), SO AS TO MAINTAIN ALL WORK, MATERIALS, APPARATUS AND FIXTURES FREE FROM INJURY OR DAMAGE.

6. AT THE END OF THE DAYS WORK, COVER ALL WORK LIKELY TO BE DAMAGED. ANY WORK DAMAGED BY FAILURE TO PROVIDE PROTECTION SHALL BE REMOVED AND REPLACED WITH NEW WORK AT THE CONTRACTOR'S EXPENSE.

7. THE CONTRACTOR SHALL PAY FOR ALL DAMAGES TO ADJACENT STRUCTURES, SIDEWALKS AND TO STREETS OR OTHER PUBLIC PROPERTY OR PUBLIC UTILITIES.

STRUCTURAL DESIGN CRITERIA:

1. THE DESIGN COMPLIES WITH THE REQUIREMENTS OF THE 2023 FLORIDA BUILDING CODE - SECTION 1609 AND OTHER REFERENCED CODES AND SPECIFICATIONS. ALL CODES AND SPECIFICATIONS SHALL BE LATEST EDITION AT TIME OF PERMIT.

2. WIND LOAD CRITERIA:

BASED ON ANSI/ASCE 7-22. BASIC WIND VELOCITY 130 MPH,

3. ROOF DESIGN LOADS:
SUPERIMPOSED DEAD LOADS: . . . . . 20 PSF
SUPERIMPOSED LIVE LOADS: . . . . . 20 PSF

4. FLOOR DESIGN LOADS:
SUPERIMPOSED DEAD LOADS: . . . . . 25 PSF
SUPERIMPOSED LIVE LOADS:
RESIDENTIAL . . . . . 40 PSF
BALCONIES . . . . . 60 PSF

5. WIND NET UPLIFT: ARE AS INDICATED ON PLANS

FOUNDATIONS: (SPREAD FOOTINGS)

1. FOUNDATIONS ARE DESIGNED TO BEAR ON WELL COMPACTED GRADE OR CLEAN FILL OF AN ALLOWABLE BEARING CAPACITY OF 1,000 PSF MINMUM. FOR REQUIRED SOIL BEARING CAPASITIES GREATER THAN 1,000 PSF, A CERTIFIED TESTING LABORATORY SHALL BE ENGAGED BY THE OWNER TO VERIFY THAT THE REQUIRED BEARING CAPACITY WAS OBTAINED. SAID SOIL CAPACITY SHALL BE CERTIFIED AND TESTED BY A FLORIDA REGISTERED FOUNDATION ENGINEER, PRIOR TO CASTING OF CONCRETE IN THE FOOTINGS.

2. NATURAL GRADE (OR FILL) BELOW FOOTINGS SHALL BE COMPACTED TO 98 % MODIFIED PROCTOR (ASTM D-1557).

3. TOP OF WALL FOOTINGS TO BE AT THE SAME ELEVATION AS TOP OF COLUMN PAD FOOTINGS. STEP WALL FOOTING FROM HIGHER COLUMN FOOTING TO THE LOWER ONE (AS DETAILED ON THE PLANS).

4. BOTTOM OF ALL FOOTINGS TO BE A MINIMUM 1'-6" BELOW THE TOP OF CONCRETE SLAB ON GRADE (UNLESS OTHERWISE NOTED) OR MINIMUM 1'-0" BELOW FINISHED GRADE, WHICHEVER IS LOWER. IN THE EVENT THAT THE SLAB STEPS ON EACH SIDE OF THE FOOTING, THE FOOTING SHALL BE 1'-6" BELOW TOP OF THE LOWER SLAB.

5. REINFORCING IN THE CONTINUOUS WALL FOOTINGS (MONOLITHIC AND NON-MONOLITHIC) SHALL BE SPLICED 40 BAR DIAMETERS MINIMUM AND SHALL EXTEND CONTINUOUSLY THRU ALL FOOTING PADS.

6. ALL LONGITUDINAL REBARS IN THE CONTINUOUS WALL FOOTINGS, SHALL BE CONTINUED AT BENTS AND CORNERS BY BENDING THE REBARS 48 BAR DIAMETERS AROUND THE CORNERS OR ADDING MATCHING CORNER BARS, EXTENDING 48 BAR-DIAMETERS INTO FOOTING EACH SIDE OF CORNER OR BENT.

7. ALL FOOTINGS SHALL BE 12" MINIMUM THICKNESS.

CONCRETE SLABS ON GRADE:

1. ALL INTERIOR AND EXTERIOR SLABS AND WALKWAYS AS SHOWN ON THE STRUCTURAL OR ARCHITECTURAL PLANS, SHALL BE FOUR INCHES THICK MINIMUM REINFORCED WITH 6 X 6 - W1.4 X W1.4 WELDED WIRE FABRIC (UNLESS OTHERWISE NOTED).

2. ALL SLABS ON GRADE TO BE CONSTRUCTED IN ACCORDANCE WITH LATEST A.C.I - "GUIDE FOR CONCRETE FLOOR AND SLAB CONSTRUCTION" (A.C.I. - 302.1R)

3. JOINTS SHALL BE PROVIDED IN ALL INTERIOR SLABS ON GRADE AT LOC. INDICATED ON THE PLANS DIVIDING THE SLAB INTO SQUARE PANELS NOT TO EXCEED 20 X 20 FT. IN SIZE. CAST SLAB IN LONG ALTERNATE STRIPS. PROVIDE A CONTRACTION JOINT BETWEEN EACH STRIP. SEE PLAN FOR SAW-CUT, CONTRACTION AND ISOLATION JOINT DETAILS.

4. PROVIDE SAW-CUT JOINTS AT ALL SIDEWALKS AT A MAXIMUM SPACING OF FIVE FEET ON CENTERS AND ISOLATION JOINTS AT 20 FEET O.C. (U.O.N.).

5. FILL MATERIAL SHALL BE PLACED IN LIFTS NOT EXCEEDING 12" AND COMPACTED TO 98 % MODIFIED PROCTOR (ASTM D-1557) WITHIN A DISTANCE OF 3 FEET BEYOND ALL FOOTING EDGES. TAKE AT LEAST ONE DENSITY TEST FOR EACH 1,600 SQ.FT. OF AREA AND 12" BELOW SURFACE. SEND RESULTS OF THE TEST TO OWNER, ARCHITECT AND ENGINEER.

CONCRETE AND REINFORCING:

1. CONCRETE DESIGN AND REINFORCEMENT IN ACCORDANCE WITH "BUILDING CODE REQUIREMENTS FOR REINFORCED CONCRETE" (A.C.I. 318 - LATEST EDITION) AND WITH "DETAILS AND DETAILING OF CONCRETE REINFORCEMENT" - (A.C.I. 315 - LATEST EDITION).

2. ALL CONCRETE WORK IN ACCORDANCE WITH "SPECIFICATIONS FOR STRUCTURAL CONCRETE FOR BUILDING" (A.C.I. 301 - LATEST EDITION). PRODUCTION OF CONCRETE, DELIVERY, PLACING AND CURING TO BE IN ACCORDANCE WITH "HOT WEATHER CONCRETING" (A.C.I. 305R - LATEST EDITION).

3. ALL CONCRETE TO BE REGULAR WEIGHT WITH A DESIGN STRENGTH OF 3,000 P.S.I. AT 28 DAYS. MAXIMUM SLUMP 5".

4. ALL REINFORCING TO BE NEW BILLET STEEL CONFORMING TO THE LATEST A.S.T.M. A-615 GRADE 60, FABRICATED IN ACCORDANCE WITH C.R.S.I. MANUAL OF STANDARD PRACTICE AND PLACED IN ACCORDANCE WITH A.C.I. 315 AND C.R.S.I. MANUAL OF STANDARD PRACTICE.

5. CONCRETE COVER UNLESS OTHERWISE DETAILED ON DRAWINGS:

FOOTINGS: (BOTTOM). . . . . 3"
(TOP & SIDES) . . . . . 2"

SLABS ON GRADE: CENTERED W/SLAB

6. BEAM REINFORCEMENT: LAPPED 36 BAR DIAMETER OR MINIMUM 18 INCHES. BOTTOM BARS SPLICED ONLY AT SUPPORTS, TOP BARS SPLICED ONLY AT MID-SPAN. ALL TOP BARS HOOKED AT NONCONTINUOUS EDGES (U.O.N.). ALL HOOKS TO BE STANDARD 90 DEGREE HOOKS AS REQUIRED (U.O.N.).

7. ADDED REINFORCEMENT: PROVIDE ADDITIONAL CORNER BARS BENT 36 INCHES MINIMUM EACH WAY AT "L" AND "T" CORNERS IN OUTER FACES OF ALL BEAMS TO MATCH ALL HORIZONTAL BAR (TOP, BOTTOM AND INTERMEDIATE REBARS).

8. SEE PLAN FOR MINIMUM SIZE CONCRETE TIE BEAM REQUIREMENTS.

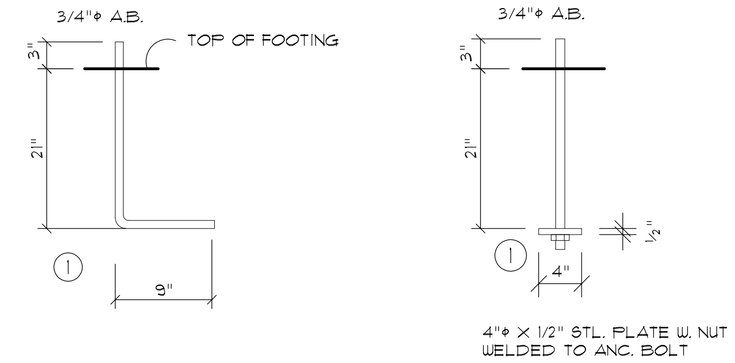

ALT. Nr.1 ALT. Nr.2

NOTE!
ALL ANCHOR BOLTS ARE ASTM GRADE A36 STEEL ROD, THREADED 3", OR GRADE A307, BLACK, AND FREE FROM RUST AND SCALE

Anchor Bolt DET'S (1)

SCALE: 1" = 1'-0"

NOTE!
REFER TO THE METAL BUILDING SHOP DRAWINGS PREPARED BY "FIERCE STEEL BUILDINGS" FOR EXACT LOCATION OF ALL EMBEDDED ANCHOR BOLTS.

NOTE!
ADDED FILL SHALL BE APPLIED IN 12" LIFTS - EA. LIFT SHALL BE CONPACTED TO 98% DRY COMPACTION PER THE "MODIFIED PROCTOR" METHOD.

NOTE!
THE DESIGN WIND SPEED FOR THIS PROJECT IS 130 MPH PER 2023 FBC 1606 AND LOCAL JURISDICTION REQUIREMENTS

ANCHOR BOLT / FOUNDATION SIZING:

THE ANCHOR BOLT DIAMETERS AND DEVELOPED LENGTHS INDICATED IN THIS DRAWING WERE DETERMININED USING SHEAR FRICTION THEORY AS DESCRIBED IN AISC DESIGN GUIDE No.7, SECTION 9.2, ASSUMING AN ANCHOR BOLT MATERIAL OF ASTM A307 OR A36. THE COMBINED FORCES ACTING AT THE BASE OF THE STEEL FRAME RESULTING IN A VERTICAL REACTION ACTING UPON THE FOUNDATION WERE DEVELOPED AS FOLLOWS:

T = Td + Tsf

WHERE
T = TOTAL TENSILE FORCE PER BOLT
Td = TENSILE FORCE PER BOLT DUE TO DIRECTLY APPLIED LOAD = P/N
Tsf = TENSILE FORCE PER BOLT DUE TO SHEAR FRICTION = V / (n X u)

WHERE
P = P = TOTAL UPLIFT TO BE RESISTED BY ANCHOR BOLT GROUP
V = V = TOTAL SHEAR FORCE TO BE RESISTED BY ANCHOR BOLT GROUP
n = n = NUMBER OF ANCHOR BOLTS
u = u = COEFFICIENT OF FRICTION (TAKEN AS 0.7 FOR UNGROUTED BASE PLATES OR 0.9 FOR GROUTED BASE PLATES)

Plans Reviewed for Code Compliance

ALTERATIONS and ADDITION for:
FURST-McNESS
LAKE CITY, FLORIDA
FOUNDATION NOTES and DETAILS

Celebrating 54 Years of Service
1972 - 2026
N.P. Geisler, Architect
AR0007005

CUSTOM ARCHITECTURAL DESIGN

NICHOLAS PAUL GEISLER
ARCHITECT
1758 NW Brown Rd.
Lake City, FL 32055
386-365-4355

Copyright 2026 (c) N.P. Geisler, Architect

DRAWN: MP8
DATE OF ISSUE: 24 MAR 2026
COMM: 2K2611
REVISIONS:
SHEET: A.3
3 OF 3

Nicholas P Geisler
Digitally signed by Nicholas P Geisler
Date: 2026.03.25 11:46:48 -04'00'
AR0007005

These drawings, as instruments of service, are the sole property of the architect, and may not be used, copied or reproduced within any other job without specific and individual authorization by the architect.
All revised sheets shall supersede any previously issued version(s). Only the latest version shall be employed for this project. All previously issued versions of this sheet SHALL BE DISCARDED.