Lumber design values are in accordance with ANSI/TPI 1 section 6.3
These truss designs rely on lumber values established by others.

RE: 1812-A - Lyons Spec

MiTek, Inc.
16023 Swingley Ridge Rd.
Chesterfield, MO 63017
314.434.1200

Site Information:

Customer Info: Parrish Builders Group Project Name: Lyons Model: .
Lot/Block: . Subdivision: .
Address: ., .
City: . State: FL

NV5 PRIVATE PROVIDER
Plans reviewed in accordance with Florida Statues 553.791

Printed copied of this document are NOT considered signed, and the signature must be verified on any electronic copies.

I hereby certify that, to the best of my knowledge and belief, the plans submitted comply with the Florida Building Code and all local amendments in effect on the date of the initial permit application. Review for code compliance does not relieve the Contractor from errors and omissions nor is to be held to permit or approve any violation of City, County, State or Federal regulation, ordinance, or code of law.

License # PX3352 & RPKS21

Name Address and License # of Structural Engineer of Record, If there is one, for the building.

Name: License #:
Address:
City: State:

General Truss Engineering Criteria & Design Loads (Individual Truss Design Drawings Show Special Loading Conditions):

Design Code: FBC2023/TPI2014 Design Program: MiTek 20/20 8.8
Wind Code: ASCE 7-22 Wind Speed: 130 mph
Roof Load: 40.0 psf Floor Load: N/A psf

This package includes 16 individual, Truss Design Drawings and 0 Additional Drawings.
With my seal affixed to this sheet, I hereby certify that I am the Truss Design Engineer and this index sheet conforms to 61G15-31.003, section 5 of the Florida Board of Professional Engineers Rules.

No.	Seal#	Truss Name	Date
1	T36483001	G1	2/25/25
2	T36483002	G2	2/25/25
3	T36483003	G3	2/25/25
4	T36483004	S1	2/25/25
5	T36483005	S2	2/25/25
6	T36483006	T1	2/25/25
7	T36483007	T3	2/25/25
8	T36483008	T4	2/25/25
9	T36483009	T5	2/25/25
10	T36483010	T6	2/25/25
11	T36483011	T7	2/25/25
12	T36483012	V1	2/25/25
13	T36483013	V2	2/25/25
14	T36483014	V3	2/25/25
15	T36483015	V4	2/25/25
16	T36483016	V5	2/25/25

The truss drawing(s) referenced above have been prepared by MiTek USA, Inc. under my direct supervision based on the parameters provided by 19 Lumber, Inc..

Truss Design Engineer's Name: Velez, Joaquin
My license renewal date for the state of Florida is February 28, 2027.

IMPORTANT NOTE: The seal on these truss component designs is a certification that the engineer named is licensed in the jurisdiction(s) identified and that the designs comply with ANSI/TPI 1. These designs are based upon parameters shown (e.g., loads, supports, dimensions, shapes and design codes), which were given to MiTek or TRENCO. Any project specific information included is for MiTek's or TRENCO's customers file reference purpose only, and was not taken into account in the preparation of these designs. MiTek or TRENCO has not independently verified the applicability of the design parameters or the designs for any particular building. Before use, the building designer should verify applicability of design parameters and properly incorporate these designs into the overall building design per ANSI/TPI 1, Chapter 2.

JOAQUIN VELEZ
LICENSE
No. 68182
STATE OF FLORIDA
PROFESSIONAL ENGINEER

Joaquin Velez PE No.68182
MiTek Inc. DBA MiTek USA FL Cert 6634
16023 Swingley Ridge Rd. Chesterfield, MO 63017
Date:

February 25,2025

Velez, Joaquin

Job	Truss	Truss Type	Qty	Ply	Lyons Spec
1812-A	G1	Common Supported Gable	2	1	T36483001 Job Reference (optional)

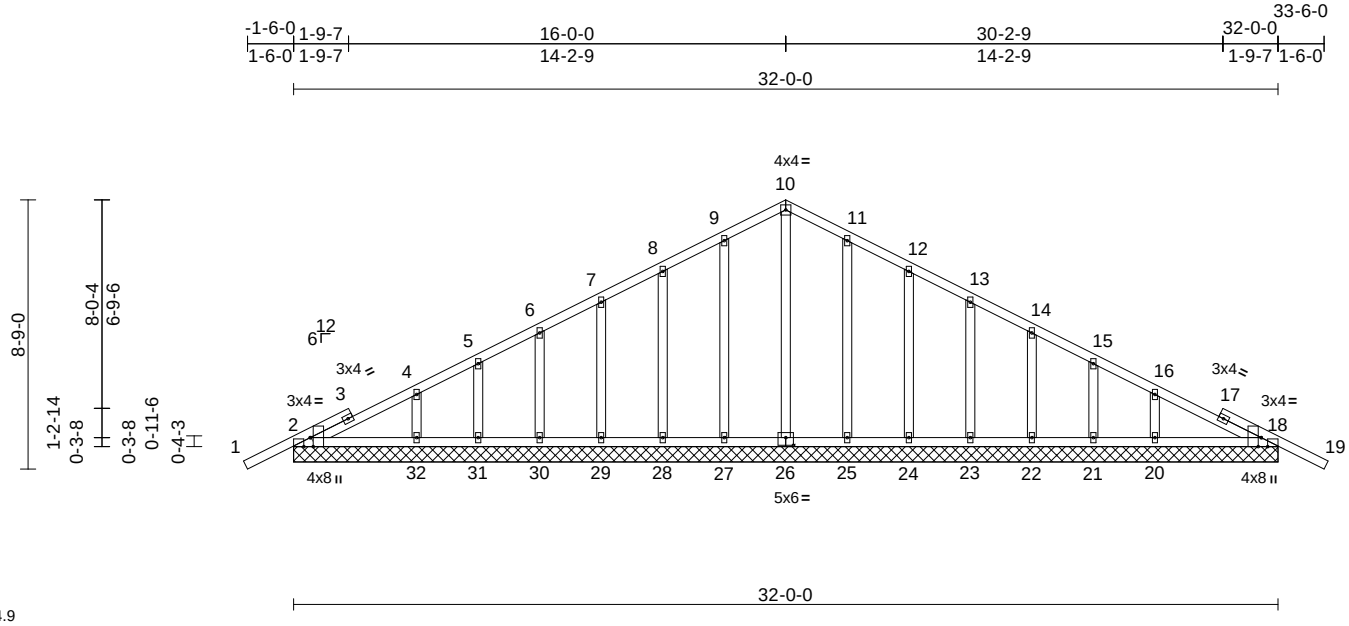

Scale = 1:74.9

Plate Offsets (X, Y): [2:0-3-8,Edge], [2:0-2-8,Edge], [18:0-3-8,Edge], [18:0-2-8,Edge], [26:0-3-0,0-3-0]

Loading	(psf)	Spacing	2-0-0	CSI		DEFL	in	(loc)	l/defl	L/d	PLATES	GRIP
TCLL (roof)	20.0	Plate Grip DOL	1.25	TC	0.19	Vert(LL)	n/a	-	n/a	999	MT20	244/190
TCDL	10.0	Lumber DOL	1.25	BC	0.08	Vert(CT)	n/a	-	n/a	999		
BCLL	0.0*	Rep Stress Incr	YES	WB	0.21	Horz(CT)	0.01	18	n/a	n/a		
BCDL	10.0	Code	FBC2023/TPI2014	Matrix-MS							Weight: 192 lb	FT = 20%

LUMBER
TOP CHORD 2x4 SP No.2
BOT CHORD 2x4 SP No.2
OTHERS 2x4 SP No.2

BRACING
TOP CHORD Structural wood sheathing directly applied or 10-0-0 oc purlins.
BOT CHORD Rigid ceiling directly applied or 6-0-0 oc bracing.

REACTIONS (size) 2=32-0-0, 18=32-0-0, 20=32-0-0, 21=32-0-0, 22=32-0-0, 23=32-0-0, 24=32-0-0, 25=32-0-0, 26=32-0-0, 27=32-0-0, 28=32-0-0, 29=32-0-0, 30=32-0-0, 31=32-0-0, 32=32-0-0
Max Horiz 2=-190 (LC 13)
Max Uplift 2=-58 (LC 13), 18=-76 (LC 13), 20=-131 (LC 13), 21=-75 (LC 13), 22=-94 (LC 13), 23=-89 (LC 13), 24=-94 (LC 13), 25=-88 (LC 13), 27=-90 (LC 12), 28=-92 (LC 12), 29=-89 (LC 12), 30=-93 (LC 12), 31=-78 (LC 12), 32=-122 (LC 12)
Max Grav 2=246 (LC 25), 18=246 (LC 26), 20=280 (LC 26), 21=113 (LC 1), 22=172 (LC 26), 23=157 (LC 1), 24=159 (LC 1), 25=169 (LC 26), 26=219 (LC 22), 27=169 (LC 25), 28=159 (LC 1), 29=157 (LC 1), 30=172 (LC 25), 31=113 (LC 1), 32=280 (LC 25)

FORCES (lb) - Maximum Compression/Maximum Tension
TOP CHORD 1-2=0/42, 2-4=-202/114, 4-5=-126/118, 5-6=-75/137, 6-7=-42/164, 7-8=-54/211, 8-9=-76/287, 9-10=-99/357, 10-11=-99/357, 11-12=-76/287, 12-13=-54/211, 13-14=-32/138, 14-15=-13/65, 15-16=-45/44, 16-18=-124/84, 18-19=0/42
BOT CHORD 2-32=-73/225, 31-32=-73/225, 30-31=-73/225, 29-30=-73/225, 28-29=-73/225, 27-28=-73/225, 25-27=-73/225, 24-25=-73/225, 23-24=-73/225, 22-23=-73/225, 21-22=-73/225, 20-21=-73/225, 18-20=-73/225
WEBS 10-26=-200/19, 9-27=-129/139, 8-28=-119/149, 7-29=-119/143, 6-30=-126/149, 5-31=-94/132, 4-32=-192/195, 11-25=-129/139, 12-24=-119/149, 13-23=-119/143, 14-22=-126/149, 15-21=-94/132, 16-20=-192/194

NOTES
1) Unbalanced roof live loads have been considered for this design.
2) Wind: ASCE 7-22; Vult=130mph (3-second gust) Vasd=101mph; TCDL=5.0psf; BCDL=5.0psf; h=25ft; Cat. II; Exp C; Enclosed; MWFRS (envelope) exterior (2) zone and C-C Zone3 zone; cantilever left and right exposed ; end vertical left and right exposed;C-C for members and forces & MWFRS for reactions shown; Lumber DOL=1.60 plate grip DOL=1.60
3) Truss designed for wind loads in the plane of the truss only. For studs exposed to wind (normal to the face), see Standard Industry Gable End Details as applicable, or consult qualified building designer as per ANSI/TPI 1.
4) Building Designer / Project engineer responsible for verifying applied roof live load shown covers rain loading requirements specific to the use of this truss component.
5) All plates are 2x4 (||) MT20 unless otherwise indicated.
6) Gable requires continuous bottom chord bearing.
7) Gable studs spaced at 2-0-0 oc.
8) This truss has been designed for a 10.0 psf bottom chord live load nonconcurrent with any other live loads.
9) * This truss has been designed for a live load of 20.0psf on the bottom chord in all areas where a rectangle 3-06-00 tall by 2-00-00 wide will fit between the bottom chord and any other members.
10) All bearings are assumed to be SP No.2 .
11) Provide mechanical connection (by others) of truss to bearing plate capable of withstanding 58 lb uplift at joint 2, 76 lb uplift at joint 18, 90 lb uplift at joint 27, 92 lb uplift at joint 28, 89 lb uplift at joint 29, 93 lb uplift at joint 30, 78 lb uplift at joint 31, 122 lb uplift at joint 32, 88 lb uplift at joint 25, 94 lb uplift at joint 24, 89 lb uplift at joint 23, 94 lb uplift at joint 22, 75 lb uplift at joint 21, 131 lb uplift at joint 20, 58 lb uplift at joint 2 and 76 lb uplift at joint 18.

LOAD CASE(S) Standard

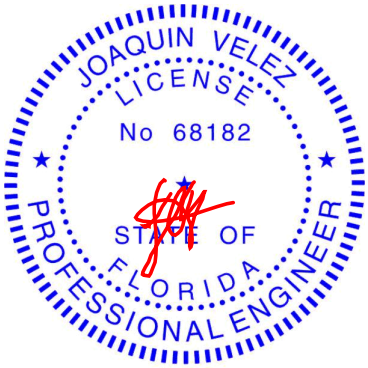

Joaquin Velez PE No.68182
MiTek Inc. DBA MiTek USA FL Cert 6634
16023 Swingley Ridge Rd. Chesterfield, MO 63017
Date:
February 25,2025

WARNING - Verify design parameters and READ NOTES ON THIS AND INCLUDED MITEK REFERENCE PAGE MII-7473 rev. 1/2/2023 BEFORE USE.
Design valid for use only with MiTek® connectors. This design is based only upon parameters shown, and is for an individual building component, not a truss system. Before use, the building designer must verify the applicability of design parameters and properly incorporate this design into the overall building design. Bracing indicated is to prevent buckling of individual truss web and/or chord members only. Additional temporary and permanent bracing is always required for stability and to prevent collapse with possible personal injury and property damage. For general guidance regarding the fabrication, storage, delivery, erection and bracing of trusses and truss systems, see **ANSI/TPI1 Quality Criteria and DSB-22** available from Truss Plate Institute (www.tpinst.org) and **BCSI Building Component Safety Information** available from the Structural Building Component Association (www.sbcscomponents.com)

MiTek®
16023 Swingley Ridge Rd.
Chesterfield, MO 63017
314.434.1200 / MiTek-US.com

Job	Truss	Truss Type	Qty	Ply	Lyons Spec
1812-A	G2	Common Supported Gable	1	1	T36483002 Job Reference (optional)

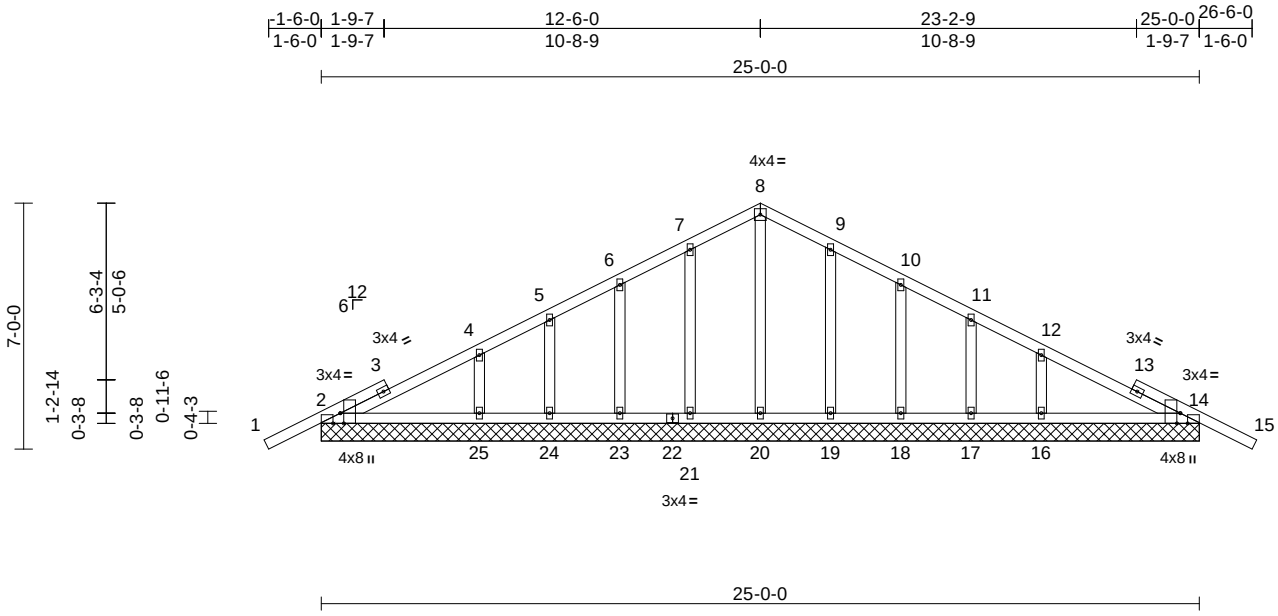

Scale = 1:65.6

Plate Offsets (X, Y): [2:0-3-8,Edge], [2:0-2-8,Edge], [14:0-3-8,Edge], [14:0-2-8,Edge]

Loading	(psf)	Spacing	2-0-0	CSI		DEFL	in	(loc)	l/defl	L/d	PLATES	GRIP
TCLL (roof)	20.0	Plate Grip DOL	1.25	TC	0.20	Vert(LL)	n/a	-	n/a	999	MT20	244/190
TCDL	10.0	Lumber DOL	1.25	BC	0.12	Vert(CT)	n/a	-	n/a	999		
BCLL	0.0*	Rep Stress Incr	YES	WB	0.11	Horz(CT)	0.01	14	n/a	n/a		
BCDL	10.0	Code	FBC2023/TPI2014	Matrix-MS							Weight: 135 lb	FT = 20%

LUMBER
TOP CHORD 2x4 SP No.2
BOT CHORD 2x4 SP No.2
OTHERS 2x4 SP No.2

BRACING
TOP CHORD Structural wood sheathing directly applied or 10-0-0 oc purlins.
BOT CHORD Rigid ceiling directly applied or 6-0-0 oc bracing.

REACTIONS (size) 2=25-0-0, 14=25-0-0, 16=25-0-0, 17=25-0-0, 18=25-0-0, 19=25-0-0, 20=25-0-0, 21=25-0-0, 23=25-0-0, 24=25-0-0, 25=25-0-0
Max Horiz 2=-151 (LC 13)
Max Uplift 2=-68 (LC 12), 14=-92 (LC 13), 16=-162 (LC 13), 17=-60 (LC 13), 18=-99 (LC 13), 19=-90 (LC 13), 21=-92 (LC 12), 23=-97 (LC 12), 24=-63 (LC 12), 25=-155 (LC 12)
Max Grav 2=250 (LC 25), 14=250 (LC 26), 16=325 (LC 26), 17=89 (LC 1), 18=176 (LC 26), 19=166 (LC 26), 20=212 (LC 22), 21=166 (LC 25), 23=176 (LC 25), 24=89 (LC 1), 25=325 (LC 25)

FORCES (lb) - Maximum Compression/Maximum Tension
TOP CHORD 1-2=0/42, 2-4=-155/133, 4-5=-62/115, 5-6=-15/139, 6-7=-26/179, 7-8=-45/252, 8-9=-45/252, 9-10=-25/179, 10-11=-5/102, 11-12=-6/68, 12-14=-110/104, 14-15=0/42
BOT CHORD 2-25=-87/207, 24-25=-87/207, 23-24=-87/207, 21-23=-87/207, 20-21=-87/207, 19-20=-87/207, 18-19=-87/207, 17-18=-87/207, 16-17=-87/207, 14-16=-87/207
WEBS 8-20=-171/0, 7-21=-128/143, 6-23=-127/154, 5-24=-80/118, 4-25=-220/229, 9-19=-128/143, 10-18=-127/154, 11-17=-80/117, 12-16=-220/228

NOTES
1) Unbalanced roof live loads have been considered for this design.
2) Wind: ASCE 7-22; Vult=130mph (3-second gust) Vasd=101mph; TCDL=5.0psf; BCDL=5.0psf; h=25ft; Cat. II; Exp C; Enclosed; MWFRS (envelope) exterior (2) zone and C-C Zone3 zone; cantilever left and right exposed ; end vertical left and right exposed;C-C for members and forces & MWFRS for reactions shown; Lumber DOL=1.60 plate grip DOL=1.60
3) Truss designed for wind loads in the plane of the truss only. For studs exposed to wind (normal to the face), see Standard Industry Gable End Details as applicable, or consult qualified building designer as per ANSI/TPI 1.
4) Building Designer / Project engineer responsible for verifying applied roof live load shown covers rain loading requirements specific to the use of this truss component.
5) All plates are 2x4 (||) MT20 unless otherwise indicated.
6) Gable requires continuous bottom chord bearing.
7) Gable studs spaced at 2-0-0 oc.
8) This truss has been designed for a 10.0 psf bottom chord live load nonconcurrent with any other live loads.
9) * This truss has been designed for a live load of 20.0psf on the bottom chord in all areas where a rectangle 3-06-00 tall by 2-00-00 wide will fit between the bottom chord and any other members.
10) All bearings are assumed to be SP No.2 .
11) Provide mechanical connection (by others) of truss to bearing plate capable of withstanding 68 lb uplift at joint 2, 92 lb uplift at joint 14, 92 lb uplift at joint 21, 97 lb uplift at joint 23, 63 lb uplift at joint 24, 155 lb uplift at joint 25, 90 lb uplift at joint 19, 99 lb uplift at joint 18, 60 lb uplift at joint 17, 162 lb uplift at joint 16, 68 lb uplift at joint 2 and 92 lb uplift at joint 14.

LOAD CASE(S) Standard

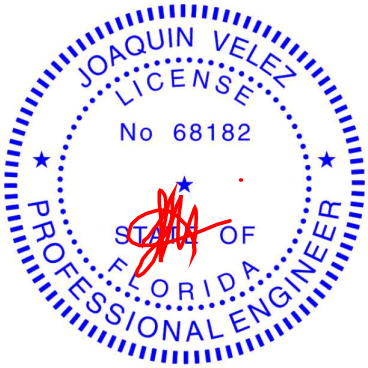

Joaquin Velez PE No.68182
MiTek Inc. DBA MiTek USA FL Cert 6634
16023 Swingley Ridge Rd. Chesterfield, MO 63017
Date:
February 25,2025

WARNING - Verify design parameters and READ NOTES ON THIS AND INCLUDED MITEK REFERENCE PAGE MII-7473 rev. 1/2/2023 BEFORE USE.
Design valid for use only with MiTek® connectors. This design is based only upon parameters shown, and is for an individual building component, not a truss system. Before use, the building designer must verify the applicability of design parameters and properly incorporate this design into the overall building design. Bracing indicated is to prevent buckling of individual truss web and/or chord members only. Additional temporary and permanent bracing is always required for stability and to prevent collapse with possible personal injury and property damage. For general guidance regarding the fabrication, storage, delivery, erection and bracing of trusses and truss systems, see **ANSI/TPI1 Quality Criteria and DSB-22** available from Truss Plate Institute (www.tpinst.org) and **BCSI Building Component Safety Information** available from the Structural Building Component Association (www.sbcscomponents.com)

MiTek®
16023 Swingley Ridge Rd.
Chesterfield, MO 63017
314.434.1200 / MiTek-US.com

Job	Truss	Truss Type	Qty	Ply	Lyons Spec
1812-A	G3	Common Supported Gable	1	1	T36483003 Job Reference (optional)

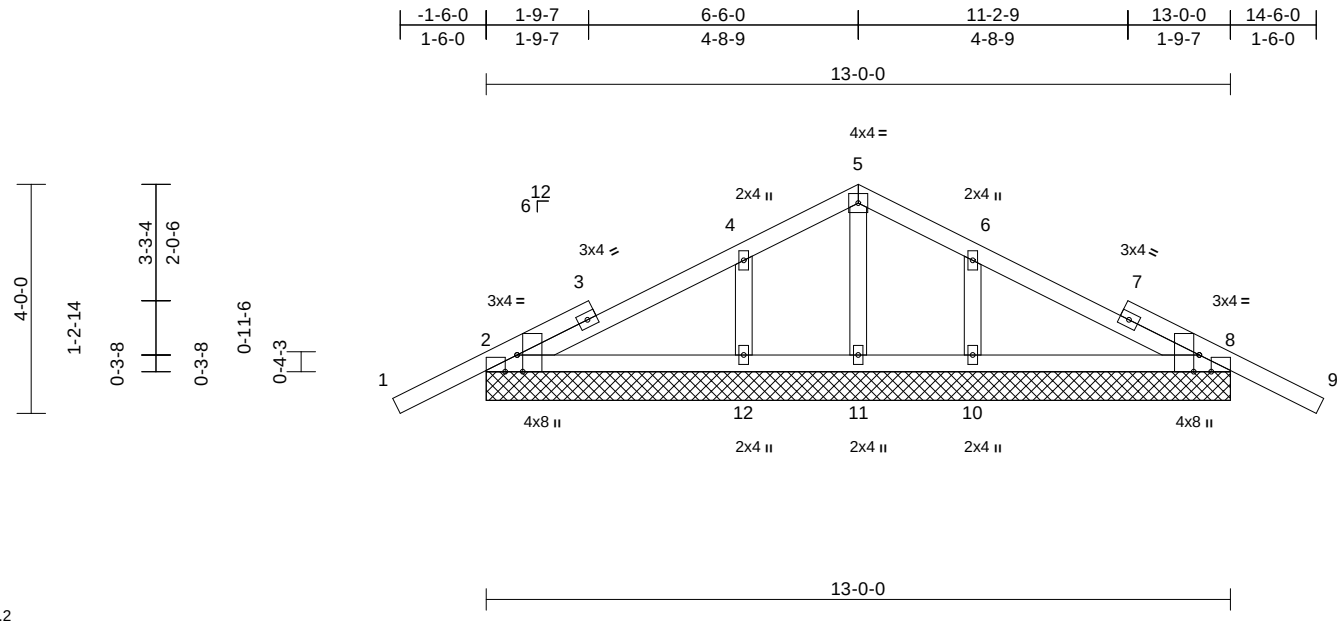

Scale = 1:40.2

Plate Offsets (X, Y): [2:0-3-8,Edge], [2:0-2-8,Edge], [8:0-3-8,Edge], [8:0-2-8,Edge]

Loading	(psf)	Spacing	2-0-0	CSI		DEFL	in	(loc)	l/defl	L/d	PLATES	GRIP
TCLL (roof)	20.0	Plate Grip DOL	1.25	TC	0.25	Vert(LL)	n/a	-	n/a	999	MT20	244/190
TCDL	10.0	Lumber DOL	1.25	BC	0.15	Vert(CT)	n/a	-	n/a	999		
BCLL	0.0*	Rep Stress Incr	YES	WB	0.05	Horz(CT)	0.00	8	n/a	n/a		
BCDL	10.0	Code	FBC2023/TPI2014	Matrix-MS							Weight: 60 lb	FT = 20%

LUMBER
TOP CHORD 2x4 SP No.2
BOT CHORD 2x4 SP No.2
OTHERS 2x4 SP No.2

BRACING
TOP CHORD Structural wood sheathing directly applied or 10-0-0 oc purlins.
BOT CHORD Rigid ceiling directly applied or 6-0-0 oc bracing.

REACTIONS (size) 2=13-0-0, 8=13-0-0, 10=13-0-0, 11=13-0-0, 12=13-0-0
Max Horiz 2=83 (LC 12)
Max Uplift 2=-96 (LC 12), 8=-108 (LC 13), 10=-172 (LC 13), 12=-168 (LC 12)
Max Grav 2=233 (LC 25), 8=233 (LC 26), 10=330 (LC 26), 11=123 (LC 1), 12=330 (LC 25)

FORCES (lb) - Maximum Compression/Maximum Tension
TOP CHORD 1-2=0/42, 2-4=-126/163, 4-5=0/127, 5-6=0/127, 6-8=-121/163, 8-9=0/42
BOT CHORD 2-12=-132/231, 11-12=-132/231, 10-11=-132/231, 8-10=-132/231
WEBS 5-11=-141/18, 4-12=-223/307, 6-10=-223/306

NOTES
1) Unbalanced roof live loads have been considered for this design.
2) Wind: ASCE 7-22; Vult=130mph (3-second gust) Vasd=101mph; TCDL=5.0psf; BCDL=5.0psf; h=25ft; Cat. II; Exp C; Enclosed; MWFRS (envelope) exterior (2) zone and C-C Zone3 zone; cantilever left and right exposed ; end vertical left and right exposed;C-C for members and forces & MWFRS for reactions shown; Lumber DOL=1.60 plate grip DOL=1.60
3) Truss designed for wind loads in the plane of the truss only. For studs exposed to wind (normal to the face), see Standard Industry Gable End Details as applicable, or consult qualified building designer as per ANSI/TPI 1.
4) Building Designer / Project engineer responsible for verifying applied roof live load shown covers rain loading requirements specific to the use of this truss component.
5) Gable requires continuous bottom chord bearing.
6) Gable studs spaced at 2-0-0 oc.
7) This truss has been designed for a 10.0 psf bottom chord live load nonconcurrent with any other live loads.
8) * This truss has been designed for a live load of 20.0psf on the bottom chord in all areas where a rectangle 3-06-00 tall by 2-00-00 wide will fit between the bottom chord and any other members.
9) All bearings are assumed to be SP No.2 .
10) Provide mechanical connection (by others) of truss to bearing plate capable of withstanding 96 lb uplift at joint 2, 108 lb uplift at joint 8, 168 lb uplift at joint 12, 172 lb uplift at joint 10, 96 lb uplift at joint 2 and 108 lb uplift at joint 8.

LOAD CASE(S) Standard

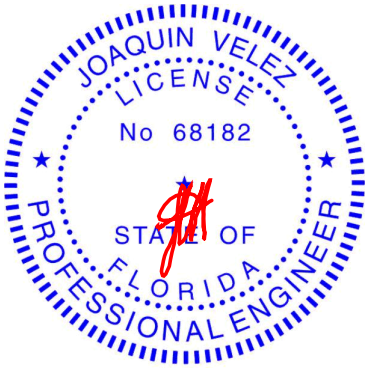

Joaquin Velez PE No.68182
MiTek Inc. DBA MiTek USA FL Cert 6634
16023 Swingley Ridge Rd. Chesterfield, MO 63017
Date:
February 25,2025

WARNING - Verify design parameters and READ NOTES ON THIS AND INCLUDED MITEK REFERENCE PAGE MII-7473 rev. 1/2/2023 BEFORE USE.
Design valid for use only with MiTek® connectors. This design is based only upon parameters shown, and is for an individual building component, not a truss system. Before use, the building designer must verify the applicability of design parameters and properly incorporate this design into the overall building design. Bracing indicated is to prevent buckling of individual truss web and/or chord members only. Additional temporary and permanent bracing is always required for stability and to prevent collapse with possible personal injury and property damage. For general guidance regarding the fabrication, storage, delivery, erection and bracing of trusses and truss systems, see **ANSI/TPI1 Quality Criteria and DSB-22** available from Truss Plate Institute (www.tpinst.org) and **BCSI Building Component Safety Information** available from the Structural Building Component Association (www.sbcscomponents.com)

MiTek®
16023 Swingley Ridge Rd.
Chesterfield, MO 63017
314.434.1200 / MiTek-US.com

Job	Truss	Truss Type	Qty	Ply	Lyons Spec
1812-A	S1	Scissor	5	1	T36483004 Job Reference (optional)

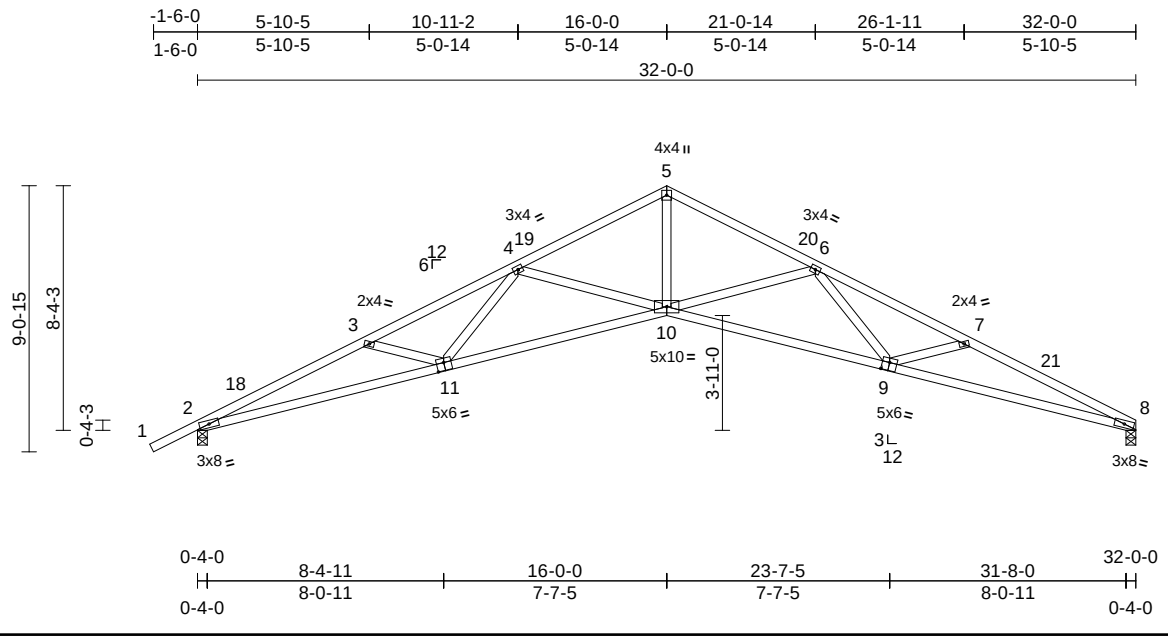

Scale = 1:78.6

Plate Offsets (X, Y): [9:0-3-0,0-3-4], [11:0-3-0,0-3-4]

Loading	(psf)	Spacing	2-0-0	CSI		DEFL	in	(loc)	l/defl	L/d	PLATES	GRIP
TCLL (roof)	20.0	Plate Grip DOL	1.25	TC	0.59	Vert(LL)	0.42	10-11	>911	240	MT20	244/190
TCDL	10.0	Lumber DOL	1.25	BC	0.94	Vert(CT)	-0.85	10-11	>450	180		
BCLL	0.0*	Rep Stress Incr	YES	WB	0.50	Horz(CT)	0.54	8	n/a	n/a		
BCDL	10.0	Code	FBC2023/TPI2014	Matrix-MS							Weight: 146 lb	FT = 20%

LUMBER

TOP CHORD 2x4 SP No.2
BOT CHORD 2x4 SP No.2 *Except* 11-2,9-8:2x4 SP 2400F 2.0E
WEBS 2x4 SP No.2

BRACING

TOP CHORD Structural wood sheathing directly applied or 2-4-11 oc purlins.
BOT CHORD Rigid ceiling directly applied or 2-2-0 oc bracing.

REACTIONS (size) 2=0-4-0, 8=0-4-0
Max Horiz 2=215 (LC 16)
Max Uplift 2=-456 (LC 12), 8=-400 (LC 13)
Max Grav 2=1376 (LC 1), 8=1278 (LC 1)

FORCES (lb) - Maximum Compression/Maximum Tension
TOP CHORD 1-2=0/42, 2-3=-4365/1456, 3-4=-3991/1231, 4-5=-2879/833, 5-6=-2879/852, 6-7=-4015/1185, 7-8=-4399/1375
BOT CHORD 2-10=-1436/3968, 8-10=-1165/4004
WEBS 5-10=-561/2234, 6-10=-794/507, 6-9=-155/575, 7-9=-364/356, 4-10=-785/496, 4-11=-133/568, 3-11=-350/340

NOTES

1) Unbalanced roof live loads have been considered for this design.
2) Wind: ASCE 7-22; Vult=130mph (3-second gust) Vasd=101mph; TCDL=5.0psf; BCDL=5.0psf; h=25ft; Cat. II; Exp C; Enclosed; MWFRS (envelope) exterior (2) zone and C-C Zone3 -1-6-13 to 1-7-10, Zone1 1-7-10 to 16-0-0, Zone2 16-0-0 to 20-6-5, Zone1 20-6-5 to 32-0-0 zone; cantilever left and right exposed ; end vertical left and right exposed;C-C for members and forces & MWFRS for reactions shown; Lumber DOL=1.60 plate grip DOL=1.60
3) Building Designer / Project engineer responsible for verifying applied roof live load shown covers rain loading requirements specific to the use of this truss component.
4) This truss has been designed for a 10.0 psf bottom chord live load nonconcurrent with any other live loads.
5) * This truss has been designed for a live load of 20.0psf on the bottom chord in all areas where a rectangle 3-06-00 tall by 2-00-00 wide will fit between the bottom chord and any other members.
6) All bearings are assumed to be SP 2400F 2.0E .
7) Bearing at joint(s) 8, 2 considers parallel to grain value using ANSI/TPI 1 angle to grain formula. Building designer should verify capacity of bearing surface.
8) Provide mechanical connection (by others) of truss to bearing plate capable of withstanding 400 lb uplift at joint 8 and 456 lb uplift at joint 2.

LOAD CASE(S) Standard

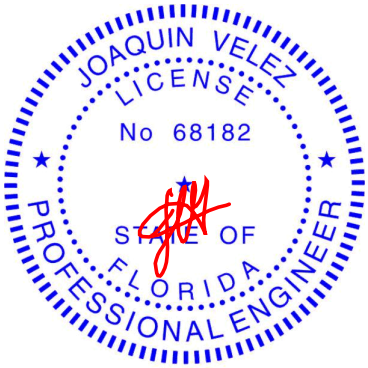

Joaquin Velez PE No.68182
MiTek Inc. DBA MiTek USA FL Cert 6634
16023 Swingley Ridge Rd. Chesterfield, MO 63017
Date:

February 25,2025

WARNING - Verify design parameters and READ NOTES ON THIS AND INCLUDED MITEK REFERENCE PAGE MII-7473 rev. 1/2/2023 BEFORE USE.
Design valid for use only with MiTek® connectors. This design is based only upon parameters shown, and is for an individual building component, not a truss system. Before use, the building designer must verify the applicability of design parameters and properly incorporate this design into the overall building design. Bracing indicated is to prevent buckling of individual truss web and/or chord members only. Additional temporary and permanent bracing is always required for stability and to prevent collapse with possible personal injury and property damage. For general guidance regarding the fabrication, storage, delivery, erection and bracing of trusses and truss systems, see **ANSI/TPI1 Quality Criteria and DSB-22** available from Truss Plate Institute (www.tpinst.org) and **BCSI Building Component Safety Information** available from the Structural Building Component Association (www.sbcscomponents.com)

MiTek®
16023 Swingley Ridge Rd.
Chesterfield, MO 63017
314.434.1200 / MiTek-US.com

Job	Truss	Truss Type	Qty	Ply	Lyons Spec
1812-A	S2	Scissor	7	1	T36483005 Job Reference (optional)

19 Lumber, Inc., Old Town, FL - 32680, Run: 8.83 S Feb 18 2025 Print: 8.830 S Feb 18 2025 MiTek Industries, Inc. Mon Feb 24 08:17:29 Page: 1

ID:Zx8UwbAJf8tSL2?eCANf4CzdMYa-RfC?PsB70Hq3NSgPqnL8w3uITXbGKWrCDoi7J4zJC?f

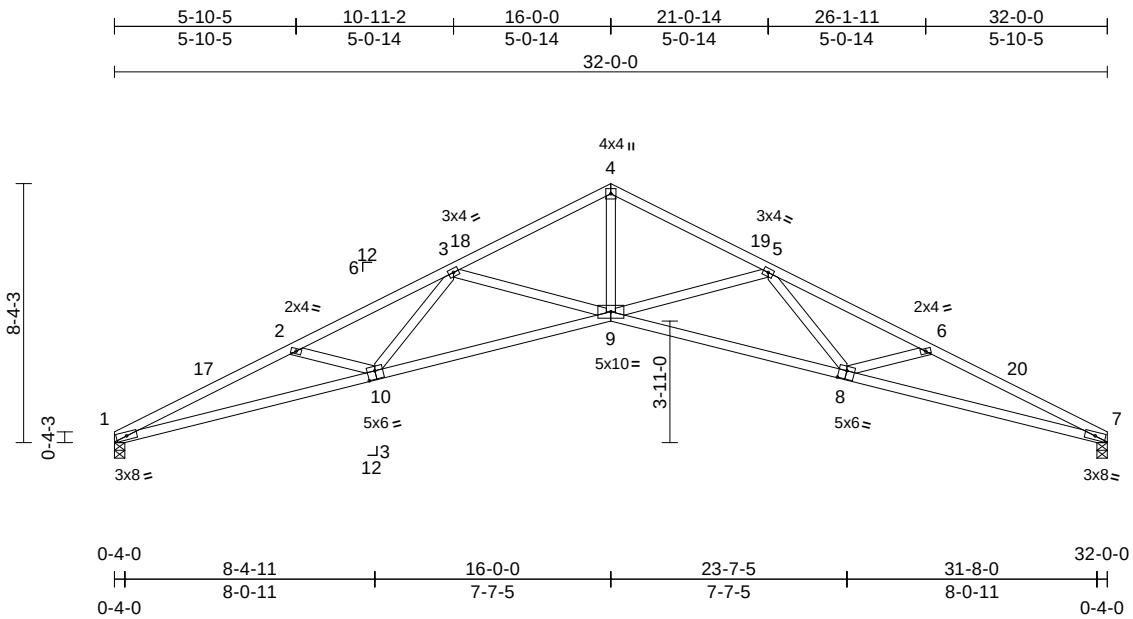

Scale = 1:74.3

Plate Offsets (X, Y): [8:0-3-0,0-3-4], [10:0-3-0,0-3-4]

Loading	(psf)	Spacing	2-0-0	CSI		DEFL	in	(loc)	l/defl	L/d	PLATES	GRIP
TCLL (roof)	20.0	Plate Grip DOL	1.25	TC	0.58	Vert(LL)	0.42	9-10	>916	240	MT20	244/190
TCDL	10.0	Lumber DOL	1.25	BC	0.94	Vert(CT)	-0.85	9-10	>451	180		
BCLL	0.0*	Rep Stress Incr	YES	WB	0.51	Horz(CT)	0.54	7	n/a	n/a		
BCDL	10.0	Code	FBC2023/TPI2014	Matrix-MS							Weight: 144 lb	FT = 20%

LUMBER

TOP CHORD 2x4 SP No.2

BOT CHORD 2x4 SP No.2 *Except* 10-1,8-7:2x4 SP 2400F 2.0E

WEBS 2x4 SP No.2

BRACING

TOP CHORD Structural wood sheathing directly applied or 2-4-14 oc purlins.

BOT CHORD Rigid ceiling directly applied or 2-2-0 oc bracing.

REACTIONS (size) 1=0-4-0, 7=0-4-0

Max Horiz 1=-180 (LC 13)

Max Uplift 1=-401 (LC 12), 7=-401 (LC 13)

Max Grav 1=1280 (LC 1), 7=1280 (LC 1)

FORCES (lb) - Maximum Compression/Maximum Tension

TOP CHORD 1-2=-4408/1487, 2-3=-4025/1255, 3-4=-2889/860, 4-5=-2889/857, 5-6=-4025/1189, 6-7=-4408/1379

BOT CHORD 1-9=-1467/4013, 7-9=-1169/4013

WEBS 4-9=-567/2242, 5-9=-794/507, 5-8=-155/575, 6-8=-364/356, 3-9=-794/503, 3-10=-147/575, 2-10=-364/350

NOTES

1) Unbalanced roof live loads have been considered for this design.
2) Wind: ASCE 7-22; Vult=130mph (3-second gust) Vasd=101mph; TCDL=5.0psf; BCDL=5.0psf; h=25ft; Cat. II; Exp C; Enclosed; MWFRS (envelope) exterior (2) zone and C-C Zone3 0-0-0 to 3-2-6, Zone1 3-2-6 to 16-0-0, Zone2 16-0-0 to 20-6-5, Zone1 20-6-5 to 32-0-0 zone; cantilever left and right exposed ; end vertical left and right exposed;C-C for members and forces & MWFRS for reactions shown; Lumber DOL=1.60 plate grip DOL=1.60
3) Building Designer / Project engineer responsible for verifying applied roof live load shown covers rain loading requirements specific to the use of this truss component.
4) This truss has been designed for a 10.0 psf bottom chord live load nonconcurrent with any other live loads.
5) * This truss has been designed for a live load of 20.0psf on the bottom chord in all areas where a rectangle 3-06-00 tall by 2-00-00 wide will fit between the bottom chord and any other members.
6) All bearings are assumed to be SP 2400F 2.0E .
7) Bearing at joint(s) 7, 1 considers parallel to grain value using ANSI/TPI 1 angle to grain formula. Building designer should verify capacity of bearing surface.
8) Provide mechanical connection (by others) of truss to bearing plate capable of withstanding 401 lb uplift at joint 7 and 401 lb uplift at joint 1.

LOAD CASE(S) Standard

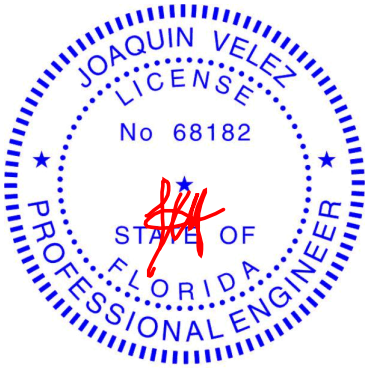

Joaquin Velez PE No.68182
MiTek Inc. DBA MiTek USA FL Cert 6634
16023 Swingley Ridge Rd. Chesterfield, MO 63017
Date:

February 25,2025

WARNING - Verify design parameters and READ NOTES ON THIS AND INCLUDED MITEK REFERENCE PAGE MII-7473 rev. 1/2/2023 BEFORE USE.

Design valid for use only with MiTek® connectors. This design is based only upon parameters shown, and is for an individual building component, not a truss system. Before use, the building designer must verify the applicability of design parameters and properly incorporate this design into the overall building design. Bracing indicated is to prevent buckling of individual truss web and/or chord members only. Additional temporary and permanent bracing is always required for stability and to prevent collapse with possible personal injury and property damage. For general guidance regarding the fabrication, storage, delivery, erection and bracing of trusses and truss systems, see **ANSI/TPI1 Quality Criteria and DSB-22** available from Truss Plate Institute (www.tpinst.org) and **BCSI Building Component Safety Information** available from the Structural Building Component Association (www.sbcscomponents.com)

MiTek®
16023 Swingley Ridge Rd.
Chesterfield, MO 63017
314.434.1200 / MiTek-US.com

Job	Truss	Truss Type	Qty	Ply	Lyons Spec
1812-A	T1	Common	14	1	T36483006 Job Reference (optional)

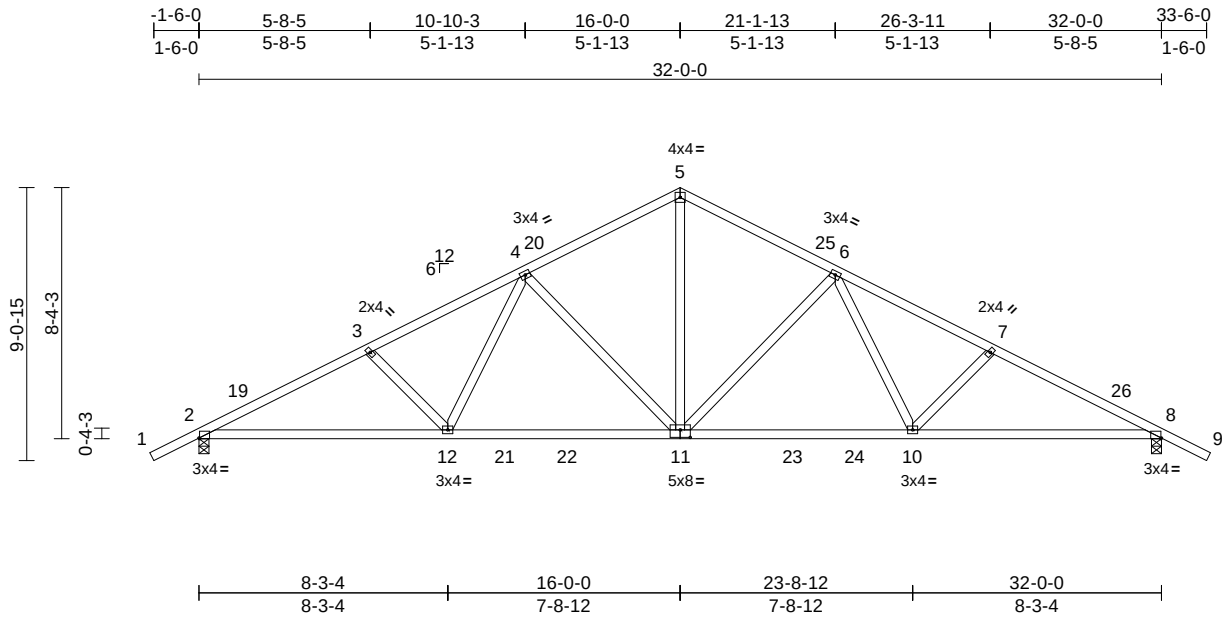

Scale = 1:76.6

Plate Offsets (X, Y): [2:0-0-4,Edge], [8:0-0-4,Edge], [11:0-4-0,0-3-0]

Loading	(psf)	Spacing	2-0-0	CSI		DEFL	in	(loc)	l/defl	L/d	PLATES	GRIP
TCLL (roof)	20.0	Plate Grip DOL	1.25	TC	0.43	Vert(LL)	-0.18	11-12	>999	240	MT20	244/190
TCDL	10.0	Lumber DOL	1.25	BC	0.89	Vert(CT)	-0.33	11-12	>999	180		
BCLL	0.0*	Rep Stress Incr	YES	WB	0.61	Horz(CT)	0.10	8	n/a	n/a		
BCDL	10.0	Code	FBC2023/TPI2014	Matrix-MS							Weight: 167 lb	FT = 20%

LUMBER
TOP CHORD 2x4 SP No.2
BOT CHORD 2x4 SP No.2
WEBS 2x4 SP No.2

BRACING
TOP CHORD Structural wood sheathing directly applied or 3-2-11 oc purlins.
BOT CHORD Rigid ceiling directly applied or 6-10-0 oc bracing.

REACTIONS (size) 2=0-4-0, 8=0-4-0
Max Horiz 2=-198 (LC 13)
Max Uplift 2=-456 (LC 12), 8=-456 (LC 13)
Max Grav 2=1469 (LC 2), 8=1469 (LC 2)

FORCES (lb) - Maximum Compression/Maximum Tension
TOP CHORD 1-2=0/42, 2-3=-2568/736, 3-4=-2387/694, 4-5=-1651/595, 5-6=-1651/595, 6-7=-2387/694, 7-8=-2568/736, 8-9=0/42
BOT CHORD 2-12=-734/2269, 10-12=-494/1841, 8-10=-546/2269
WEBS 5-11=-327/1180, 6-11=-617/374, 6-10=-132/565, 7-10=-313/267, 4-11=-617/373, 4-12=-131/565, 3-12=-313/267

NOTES
1) Unbalanced roof live loads have been considered for this design.
2) Wind: ASCE 7-22; Vult=130mph (3-second gust) Vasd=101mph; TCDL=5.0psf; BCDL=5.0psf; h=25ft; Cat. II; Exp C; Enclosed; MWFRS (envelope) exterior (2) zone and C-C Zone3 -1-6-13 to 1-7-10, Zone1 1-7-10 to 16-0-0, Zone2 16-0-0 to 20-6-5, Zone1 20-6-5 to 33-6-13 zone; cantilever left and right exposed ; end vertical left and right exposed;C-C for members and forces & MWFRS for reactions shown; Lumber DOL=1.60 plate grip DOL=1.60
3) Building Designer / Project engineer responsible for verifying applied roof live load shown covers rain loading requirements specific to the use of this truss component.
4) This truss has been designed for a 10.0 psf bottom chord live load nonconcurrent with any other live loads.
5) * This truss has been designed for a live load of 20.0psf on the bottom chord in all areas where a rectangle 3-06-00 tall by 2-00-00 wide will fit between the bottom chord and any other members, with BCDL = 10.0psf.
6) All bearings are assumed to be SP No.2 .
7) Provide mechanical connection (by others) of truss to bearing plate capable of withstanding 456 lb uplift at joint 2 and 456 lb uplift at joint 8.

LOAD CASE(S) Standard

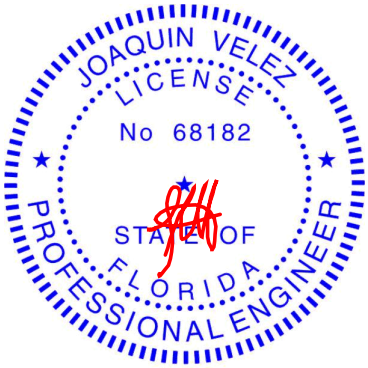

Joaquin Velez PE No.68182
MiTek Inc. DBA MiTek USA FL Cert 6634
16023 Swingley Ridge Rd. Chesterfield, MO 63017
Date:
February 25,2025

WARNING - Verify design parameters and READ NOTES ON THIS AND INCLUDED MITEK REFERENCE PAGE MII-7473 rev. 1/2/2023 BEFORE USE.
Design valid for use only with MiTek® connectors. This design is based only upon parameters shown, and is for an individual building component, not a truss system. Before use, the building designer must verify the applicability of design parameters and properly incorporate this design into the overall building design. Bracing indicated is to prevent buckling of individual truss web and/or chord members only. Additional temporary and permanent bracing is always required for stability and to prevent collapse with possible personal injury and property damage. For general guidance regarding the fabrication, storage, delivery, erection and bracing of trusses and truss systems, see **ANSI/TPI1 Quality Criteria and DSB-22** available from Truss Plate Institute (www.tpinst.org) and **BCSI Building Component Safety Information** available from the Structural Building Component Association (www.sbcscomponents.com)

MiTek®
16023 Swingley Ridge Rd.
Chesterfield, MO 63017
314.434.1200 / MiTek-US.com

Job	Truss	Truss Type	Qty	Ply	Lyons Spec
1812-A	T3	Common	1	1	T36483007 Job Reference (optional)

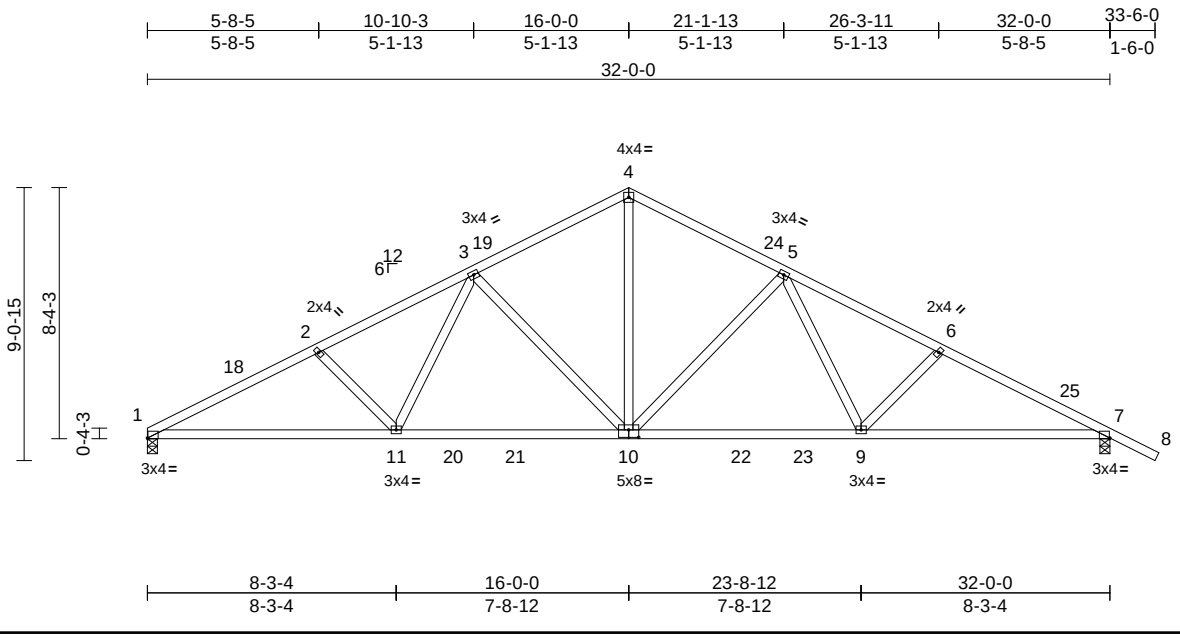

Scale = 1:76.6

Plate Offsets (X, Y): [1:0-0-4,Edge], [7:0-0-4,Edge], [10:0-4-0,0-3-0]

Loading	(psf)	Spacing	2-0-0	CSI		DEFL	in	(loc)	l/defl	L/d	PLATES	GRIP
TCLL (roof)	20.0	Plate Grip DOL	1.25	TC	0.49	Vert(LL)	-0.19	9-10	>999	240	MT20	244/190
TCDL	10.0	Lumber DOL	1.25	BC	0.91	Vert(CT)	-0.34	9-10	>999	180		
BCLL	0.0*	Rep Stress Incr	YES	WB	0.61	Horz(CT)	0.10	7	n/a	n/a		
BCDL	10.0	Code	FBC2023/TPI2014	Matrix-MS							Weight: 165 lb	FT = 20%

LUMBER
TOP CHORD 2x4 SP No.2
BOT CHORD 2x4 SP No.2
WEBS 2x4 SP No.2

BRACING
TOP CHORD Structural wood sheathing directly applied or 3-1-0 oc purlins.
BOT CHORD Rigid ceiling directly applied or 2-2-0 oc bracing.

REACTIONS (size) 1=0-4-0, 7=0-4-0
Max Horiz 1=-215 (LC 17)
Max Uplift 1=-400 (LC 12), 7=-457 (LC 13)
Max Grav 1=1389 (LC 2), 7=1471 (LC 2)

FORCES (lb) - Maximum Compression/Maximum Tension
TOP CHORD 1-2=-2587/799, 2-3=-2403/755, 3-4=-1654/610, 4-5=-1655/598, 5-6=-2391/706, 6-7=-2572/738, 7-8=0/42
BOT CHORD 1-11=-751/2289, 9-11=-501/1849, 7-9=-561/2273
WEBS 4-10=-339/1183, 5-10=-617/374, 5-9=-132/565, 6-9=-312/267, 3-10=-623/379, 3-11=-143/578, 2-11=-324/276

NOTES
1) Unbalanced roof live loads have been considered for this design.
2) Wind: ASCE 7-22; Vult=130mph (3-second gust) Vasd=101mph; TCDL=5.0psf; BCDL=5.0psf; h=25ft; Cat. II; Exp C; Enclosed; MWFRS (envelope) exterior (2) zone and C-C Zone3 0-0-0 to 3-2-6, Zone1 3-2-6 to 16-0-0, Zone2 16-0-0 to 20-6-5, Zone1 20-6-5 to 33-6-13 zone; cantilever left and right exposed ; end vertical left and right exposed;C-C for members and forces & MWFRS for reactions shown; Lumber DOL=1.60 plate grip DOL=1.60
3) Building Designer / Project engineer responsible for verifying applied roof live load shown covers rain loading requirements specific to the use of this truss component.
4) This truss has been designed for a 10.0 psf bottom chord live load nonconcurrent with any other live loads.
5) * This truss has been designed for a live load of 20.0psf on the bottom chord in all areas where a rectangle 3-06-00 tall by 2-00-00 wide will fit between the bottom chord and any other members, with BCDL = 10.0psf.
6) All bearings are assumed to be SP No.2 .
7) Provide mechanical connection (by others) of truss to bearing plate capable of withstanding 400 lb uplift at joint 1 and 457 lb uplift at joint 7.

LOAD CASE(S) Standard

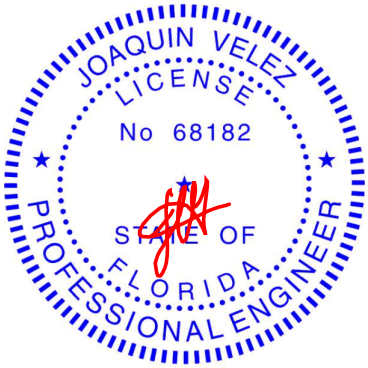

Joaquin Velez PE No.68182
MiTek Inc. DBA MiTek USA FL Cert 6634
16023 Swingley Ridge Rd. Chesterfield, MO 63017
Date:

February 25,2025

WARNING - Verify design parameters and READ NOTES ON THIS AND INCLUDED MITEK REFERENCE PAGE MII-7473 rev. 1/2/2023 BEFORE USE.
Design valid for use only with MiTek® connectors. This design is based only upon parameters shown, and is for an individual building component, not a truss system. Before use, the building designer must verify the applicability of design parameters and properly incorporate this design into the overall building design. Bracing indicated is to prevent buckling of individual truss web and/or chord members only. Additional temporary and permanent bracing is always required for stability and to prevent collapse with possible personal injury and property damage. For general guidance regarding the fabrication, storage, delivery, erection and bracing of trusses and truss systems, see **ANSI/TPI1 Quality Criteria and DSB-22** available from Truss Plate Institute (www.tpinst.org) and **BCSI Building Component Safety Information** available from the Structural Building Component Association (www.sbcscomponents.com)

MiTek®
16023 Swingley Ridge Rd.
Chesterfield, MO 63017
314.434.1200 / MiTek-US.com

Job	Truss	Truss Type	Qty	Ply	Lyons Spec
1812-A	T4	Common	2	1	T36483008 Job Reference (optional)

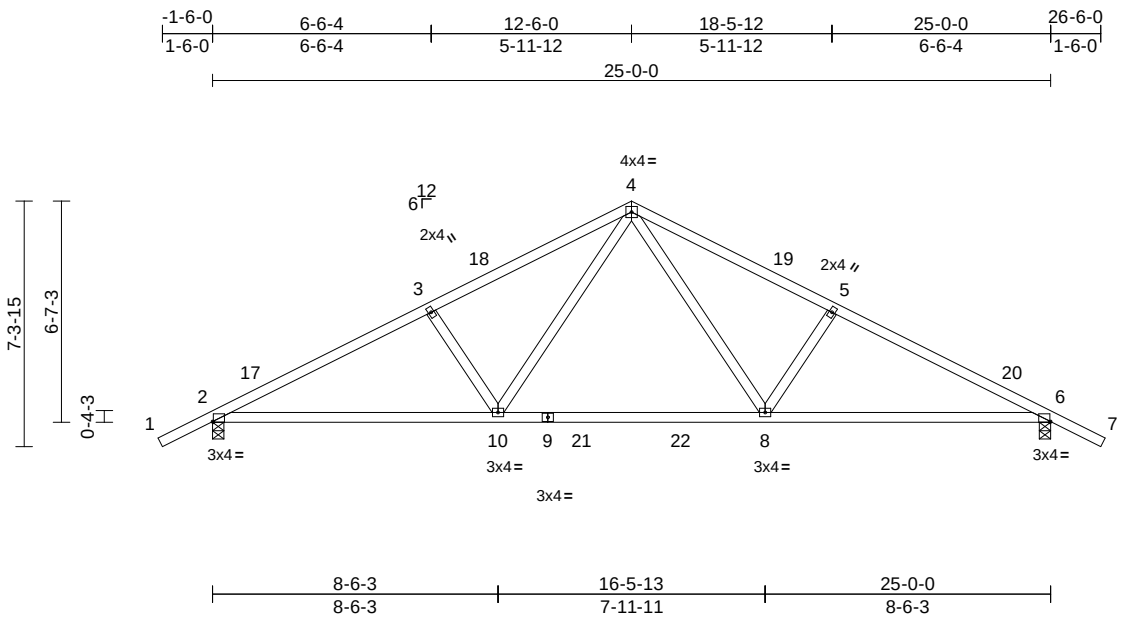

Scale = 1:68.7

Plate Offsets (X, Y): [2:0-0-4,Edge], [6:0-0-4,Edge]

Loading	(psf)	Spacing	2-0-0	CSI		DEFL	in	(loc)	l/defl	L/d	PLATES	GRIP
TCLL (roof)	20.0	Plate Grip DOL	1.25	TC	0.48	Vert(LL)	-0.15	8-10	>999	240	MT20	244/190
TCDL	10.0	Lumber DOL	1.25	BC	0.83	Vert(CT)	-0.28	10-13	>999	180		
BCLL	0.0*	Rep Stress Incr	YES	WB	0.24	Horz(CT)	0.05	6	n/a	n/a		
BCDL	10.0	Code	FBC2023/TPI2014	Matrix-MS							Weight: 116 lb	FT = 20%

LUMBER
TOP CHORD 2x4 SP No.2
BOT CHORD 2x4 SP No.2
WEBS 2x4 SP No.2

BRACING
TOP CHORD Structural wood sheathing directly applied or 3-9-10 oc purlins.
BOT CHORD Rigid ceiling directly applied or 8-1-12 oc bracing.

REACTIONS (size) 2=0-4-0, 6=0-4-0
Max Horiz 2=158 (LC 12)
Max Uplift 2=-369 (LC 12), 6=-369 (LC 13)
Max Grav 2=1163 (LC 2), 6=1163 (LC 2)

FORCES (lb) - Maximum Compression/Maximum Tension
TOP CHORD 1-2=0/42, 2-3=-1864/560, 3-4=-1712/558, 4-5=-1712/558, 5-6=-1864/559, 6-7=0/42
BOT CHORD 2-10=-504/1636, 8-10=-194/1081, 6-8=-398/1636
WEBS 4-8=-245/720, 5-8=-385/333, 4-10=-245/720, 3-10=-385/332

NOTES
1) Unbalanced roof live loads have been considered for this design.
2) Wind: ASCE 7-22; Vult=130mph (3-second gust) Vasd=101mph; TCDL=5.0psf; BCDL=5.0psf; h=25ft; Cat. II; Exp C; Enclosed; MWFRS (envelope) exterior (2) zone and C-C Zone3 -1-6-13 to 1-5-3, Zone1 1-5-3 to 12-6-0, Zone2 12-6-0 to 16-8-15, Zone1 16-8-15 to 26-6-13 zone; cantilever left and right exposed ; end vertical left and right exposed;C-C for members and forces & MWFRS for reactions shown; Lumber DOL=1.60 plate grip DOL=1.60
3) Building Designer / Project engineer responsible for verifying applied roof live load shown covers rain loading requirements specific to the use of this truss component.
4) This truss has been designed for a 10.0 psf bottom chord live load nonconcurrent with any other live loads.
5) * This truss has been designed for a live load of 20.0psf on the bottom chord in all areas where a rectangle 3-06-00 tall by 2-00-00 wide will fit between the bottom chord and any other members, with BCDL = 10.0psf.
6) All bearings are assumed to be SP No.2 .
7) Provide mechanical connection (by others) of truss to bearing plate capable of withstanding 369 lb uplift at joint 2 and 369 lb uplift at joint 6.

LOAD CASE(S) Standard

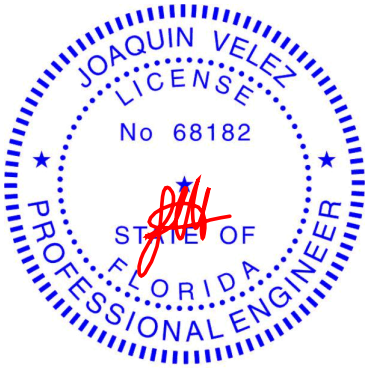

Joaquin Velez PE No.68182
MiTek Inc. DBA MiTek USA FL Cert 6634
16023 Swingley Ridge Rd. Chesterfield, MO 63017
Date:
February 25,2025

WARNING - Verify design parameters and READ NOTES ON THIS AND INCLUDED MITEK REFERENCE PAGE MII-7473 rev. 1/2/2023 BEFORE USE.
Design valid for use only with MiTek® connectors. This design is based only upon parameters shown, and is for an individual building component, not a truss system. Before use, the building designer must verify the applicability of design parameters and properly incorporate this design into the overall building design. Bracing indicated is to prevent buckling of individual truss web and/or chord members only. Additional temporary and permanent bracing is always required for stability and to prevent collapse with possible personal injury and property damage. For general guidance regarding the fabrication, storage, delivery, erection and bracing of trusses and truss systems, see **ANSI/TPI1 Quality Criteria and DSB-22** available from Truss Plate Institute (www.tpinst.org) and **BCSI Building Component Safety Information** available from the Structural Building Component Association (www.sbcscomponents.com)

MiTek®
16023 Swingley Ridge Rd.
Chesterfield, MO 63017
314.434.1200 / MiTek-US.com

Job	Truss	Truss Type	Qty	Ply	Lyons Spec
1812-A	T5	Common	4	1	T36483009 Job Reference (optional)

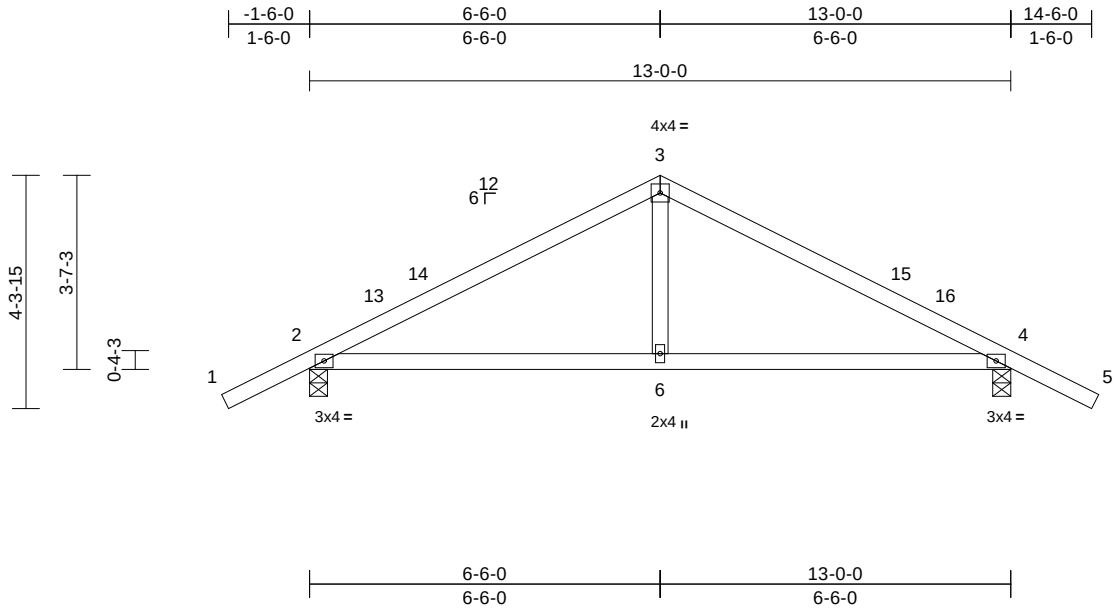

Scale = 1:42.7

Loading	(psf)	Spacing	2-0-0	CSI		DEFL	in	(loc)	l/defl	L/d	PLATES	GRIP
TCLL (roof)	20.0	Plate Grip DOL	1.25	TC	0.48	Vert(LL)	0.07	6-9	>999	240	MT20	244/190
TCDL	10.0	Lumber DOL	1.25	BC	0.46	Vert(CT)	-0.10	6-9	>999	180		
BCLL	0.0*	Rep Stress Incr	YES	WB	0.07	Horz(CT)	0.01	4	n/a	n/a		
BCDL	10.0	Code	FBC2023/TPI2014	Matrix-MS							Weight: 51 lb	FT = 20%

LUMBER
TOP CHORD 2x4 SP No.2
BOT CHORD 2x4 SP No.2
WEBS 2x4 SP No.2

BRACING
TOP CHORD Structural wood sheathing directly applied or 6-0-0 oc purlins.
BOT CHORD Rigid ceiling directly applied or 10-0-0 oc bracing.

REACTIONS (size) 2=0-4-0, 4=0-4-0
Max Horiz 2=-91 (LC 17)
Max Uplift 2=-220 (LC 12), 4=-220 (LC 13)
Max Grav 2=614 (LC 1), 4=614 (LC 1)

FORCES (lb) - Maximum Compression/Maximum Tension
TOP CHORD 1-2=0/42, 2-3=-719/356, 3-4=-719/356, 4-5=0/42
BOT CHORD 2-6=-138/575, 4-6=-138/575
WEBS 3-6=0/304

NOTES
1) Unbalanced roof live loads have been considered for this design.
2) Wind: ASCE 7-22; Vult=130mph (3-second gust) Vasd=101mph; TCDL=5.0psf; BCDL=5.0psf; h=25ft; Cat. II; Exp C; Enclosed; MWFRS (envelope) exterior (2) zone and C-C Zone3 -1-6-13 to 1-5-3, Zone1 1-5-3 to 6-6-0, Zone2 6-6-0 to 10-8-15, Zone1 10-8-15 to 14-6-13 zone; cantilever left and right exposed ; end vertical left and right exposed;C-C for members and forces & MWFRS for reactions shown; Lumber DOL=1.60 plate grip DOL=1.60
3) Building Designer / Project engineer responsible for verifying applied roof live load shown covers rain loading requirements specific to the use of this truss component.
4) This truss has been designed for a 10.0 psf bottom chord live load nonconcurrent with any other live loads.
5) * This truss has been designed for a live load of 20.0psf on the bottom chord in all areas where a rectangle 3-06-00 tall by 2-00-00 wide will fit between the bottom chord and any other members.
6) All bearings are assumed to be SP No.2 .
7) Provide mechanical connection (by others) of truss to bearing plate capable of withstanding 220 lb uplift at joint 2 and 220 lb uplift at joint 4.

LOAD CASE(S) Standard

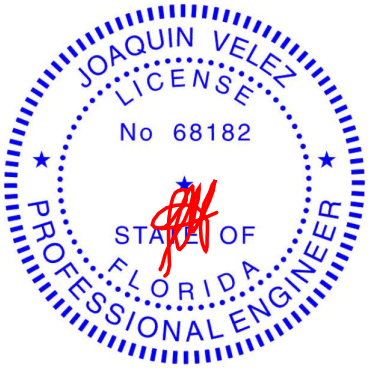

Joaquin Velez PE No.68182
MiTek Inc. DBA MiTek USA FL Cert 6634
16023 Swingley Ridge Rd. Chesterfield, MO 63017
Date:
February 25,2025

WARNING - Verify design parameters and READ NOTES ON THIS AND INCLUDED MITEK REFERENCE PAGE MII-7473 rev. 1/2/2023 BEFORE USE.
Design valid for use only with MiTek® connectors. This design is based only upon parameters shown, and is for an individual building component, not a truss system. Before use, the building designer must verify the applicability of design parameters and properly incorporate this design into the overall building design. Bracing indicated is to prevent buckling of individual truss web and/or chord members only. Additional temporary and permanent bracing is always required for stability and to prevent collapse with possible personal injury and property damage. For general guidance regarding the fabrication, storage, delivery, erection and bracing of trusses and truss systems, see **ANSI/TPI1 Quality Criteria and DSB-22** available from Truss Plate Institute (www.tpinst.org) and **BCSI Building Component Safety Information** available from the Structural Building Component Association (www.sbcscomponents.com)

MiTek®
16023 Swingley Ridge Rd.
Chesterfield, MO 63017
314.434.1200 / MiTek-US.com

Job	Truss	Truss Type	Qty	Ply	Lyons Spec
1812-A	T6	Common	1	1	T36483010 Job Reference (optional)

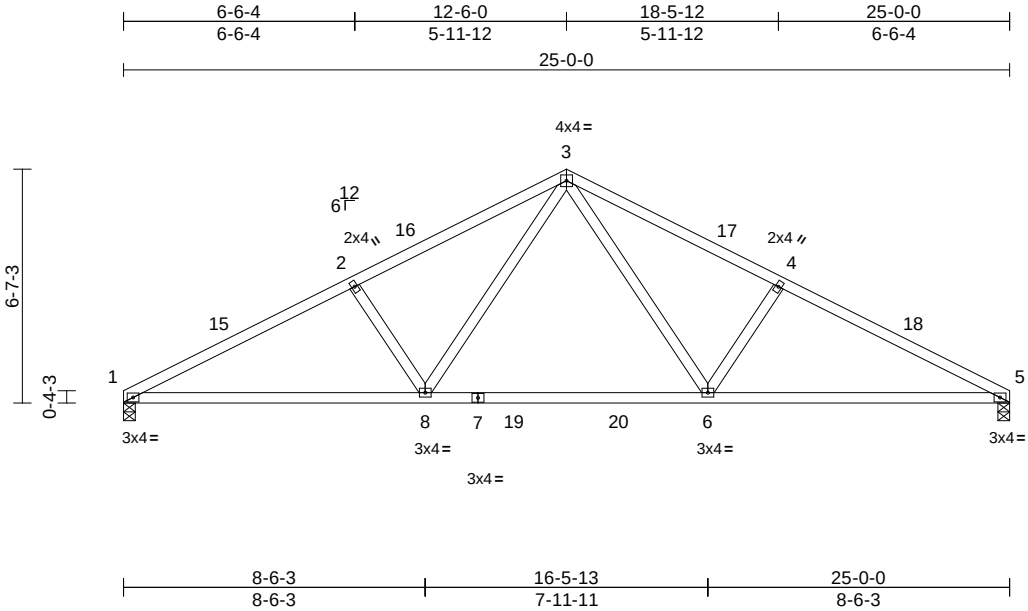

Scale = 1:65

Loading	(psf)	Spacing	2-0-0	CSI		DEFL	in	(loc)	l/defl	L/d	PLATES	GRIP
TCLL (roof)	20.0	Plate Grip DOL	1.25	TC	0.50	Vert(LL)	-0.14	6-8	>999	240	MT20	244/190
TCDL	10.0	Lumber DOL	1.25	BC	0.85	Vert(CT)	-0.30	6-14	>999	180		
BCLL	0.0*	Rep Stress Incr	YES	WB	0.25	Horz(CT)	0.05	5	n/a	n/a		
BCDL	10.0	Code	FBC2023/TPI2014	Matrix-MS							Weight: 111 lb	FT = 20%

LUMBER
TOP CHORD 2x4 SP No.2
BOT CHORD 2x4 SP No.2
WEBS 2x4 SP No.2

BRACING
TOP CHORD Structural wood sheathing directly applied or 3-7-9 oc purlins.
BOT CHORD Rigid ceiling directly applied or 7-9-10 oc bracing.

REACTIONS (size) 1=0-4-0, 5=0-4-0
Max Horiz 1=-141 (LC 13)
Max Uplift 1=-313 (LC 12), 5=-313 (LC 13)
Max Grav 1=1085 (LC 2), 5=1085 (LC 2)

FORCES (lb) - Maximum Compression/Maximum Tension
TOP CHORD 1-2=-1884/608, 2-3=-1731/608, 3-4=-1731/608, 4-5=-1884/608
BOT CHORD 1-8=-538/1657, 6-8=-218/1091, 5-6=-451/1657
WEBS 3-6=-257/733, 4-6=-394/339, 3-8=-257/733, 2-8=-394/339

NOTES
1) Unbalanced roof live loads have been considered for this design.
2) Wind: ASCE 7-22; Vult=130mph (3-second gust) Vasd=101mph; TCDL=5.0psf; BCDL=5.0psf; h=25ft; Cat. II; Exp C; Enclosed; MWFRS (envelope) exterior (2) zone and C-C Zone3 0-0-0 to 3-0-0, Zone1 3-0-0 to 12-6-0, Zone2 12-6-0 to 16-8-15, Zone1 16-8-15 to 25-0-0 zone; cantilever left and right exposed ; end vertical left and right exposed;C-C for members and forces & MWFRS for reactions shown; Lumber DOL=1.60 plate grip DOL=1.60
3) Building Designer / Project engineer responsible for verifying applied roof live load shown covers rain loading requirements specific to the use of this truss component.
4) This truss has been designed for a 10.0 psf bottom chord live load nonconcurrent with any other live loads.
5) * This truss has been designed for a live load of 20.0psf on the bottom chord in all areas where a rectangle 3-06-00 tall by 2-00-00 wide will fit between the bottom chord and any other members, with BCDL = 10.0psf.
6) All bearings are assumed to be SP No.2 .
7) Provide mechanical connection (by others) of truss to bearing plate capable of withstanding 313 lb uplift at joint 1 and 313 lb uplift at joint 5.

LOAD CASE(S) Standard

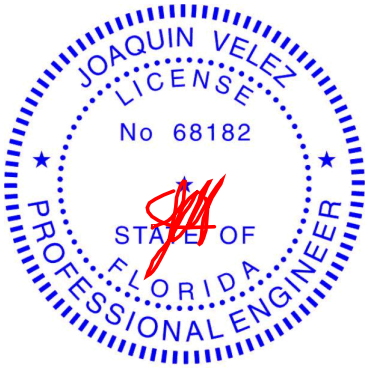

Joaquin Velez PE No.68182
MiTek Inc. DBA MiTek USA FL Cert 6634
16023 Swingley Ridge Rd. Chesterfield, MO 63017
Date:
February 25,2025

WARNING - Verify design parameters and READ NOTES ON THIS AND INCLUDED MITEK REFERENCE PAGE MII-7473 rev. 1/2/2023 BEFORE USE.
Design valid for use only with MiTek® connectors. This design is based only upon parameters shown, and is for an individual building component, not a truss system. Before use, the building designer must verify the applicability of design parameters and properly incorporate this design into the overall building design. Bracing indicated is to prevent buckling of individual truss web and/or chord members only. Additional temporary and permanent bracing is always required for stability and to prevent collapse with possible personal injury and property damage. For general guidance regarding the fabrication, storage, delivery, erection and bracing of trusses and truss systems, see **ANSI/TPI1 Quality Criteria and DSB-22** available from Truss Plate Institute (www.tpinst.org) and **BCSI Building Component Safety Information** available from the Structural Building Component Association (www.sbcscomponents.com)

MiTek®
16023 Swingley Ridge Rd.
Chesterfield, MO 63017
314.434.1200 / MiTek-US.com

Job	Truss	Truss Type	Qty	Ply	Lyons Spec
1812-A	T7	Common	1	1	T36483011 Job Reference (optional)

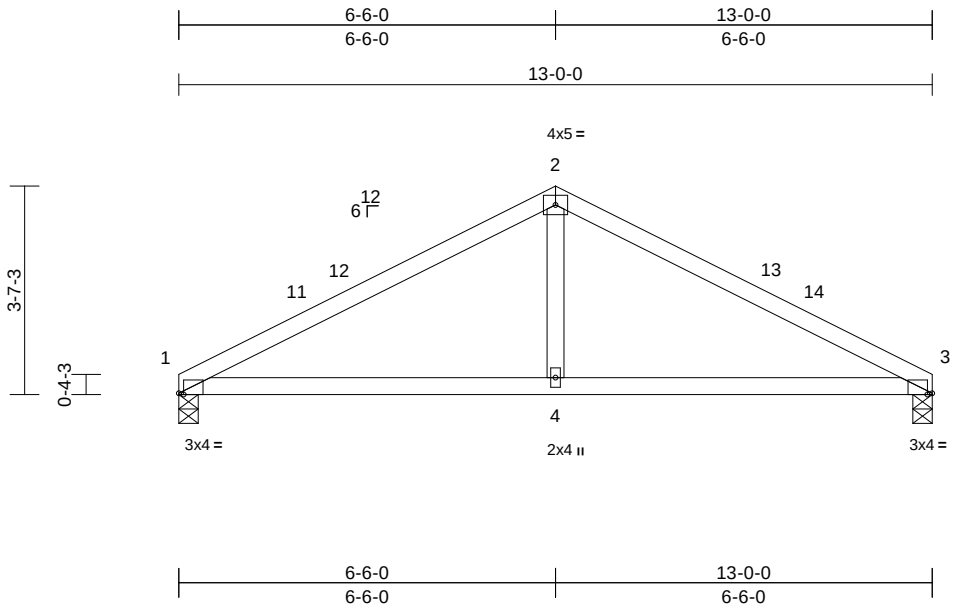

Scale = 1:39.8

Plate Offsets (X, Y): [1:0-1-0,Edge], [3:0-1-0,Edge]

Loading	(psf)	Spacing	2-0-0	CSI		DEFL	in	(loc)	l/defl	L/d	PLATES	GRIP
TCLL (roof)	20.0	Plate Grip DOL	1.25	TC	0.51	Vert(LL)	0.09	4-7	>999	240	MT20	244/190
TCDL	10.0	Lumber DOL	1.25	BC	0.49	Vert(CT)	-0.12	4-7	>999	180		
BCLL	0.0*	Rep Stress Incr	YES	WB	0.07	Horz(CT)	0.01	3	n/a	n/a		
BCDL	10.0	Code	FBC2023/TPI2014	Matrix-MS							Weight: 46 lb	FT = 20%

LUMBER
TOP CHORD 2x4 SP No.2
BOT CHORD 2x4 SP No.2
WEBS 2x4 SP No.2

BRACING
TOP CHORD Structural wood sheathing directly applied or 5-10-10 oc purlins.
BOT CHORD Rigid ceiling directly applied or 10-0-0 oc bracing.

REACTIONS (size) 1=0-4-0, 3=0-4-0
Max Horiz 1=73 (LC 12)
Max Uplift 1=-163 (LC 12), 3=-163 (LC 13)
Max Grav 1=520 (LC 1), 3=520 (LC 1)

FORCES (lb) - Maximum Compression/Maximum Tension
TOP CHORD 1-2=-751/422, 2-3=-751/422
BOT CHORD 1-4=-244/606, 3-4=-244/606
WEBS 2-4=-30/310

NOTES
1) Unbalanced roof live loads have been considered for this design.
2) Wind: ASCE 7-22; Vult=130mph (3-second gust) Vasd=101mph; TCDL=5.0psf; BCDL=5.0psf; h=25ft; Cat. II; Exp C; Enclosed; MWFRS (envelope) exterior (2) zone and C-C Zone3 0-0-0 to 3-0-0, Zone1 3-0-0 to 6-6-0, Zone2 6-6-0 to 10-8-15, Zone1 10-8-15 to 13-0-0 zone; cantilever left and right exposed ; end vertical left and right exposed;C-C for members and forces & MWFRS for reactions shown; Lumber DOL=1.60 plate grip DOL=1.60
3) Building Designer / Project engineer responsible for verifying applied roof live load shown covers rain loading requirements specific to the use of this truss component.
4) This truss has been designed for a 10.0 psf bottom chord live load nonconcurrent with any other live loads.
5) * This truss has been designed for a live load of 20.0psf on the bottom chord in all areas where a rectangle 3-06-00 tall by 2-00-00 wide will fit between the bottom chord and any other members.
6) All bearings are assumed to be SP No.2 .
7) Provide mechanical connection (by others) of truss to bearing plate capable of withstanding 163 lb uplift at joint 1 and 163 lb uplift at joint 3.

LOAD CASE(S) Standard

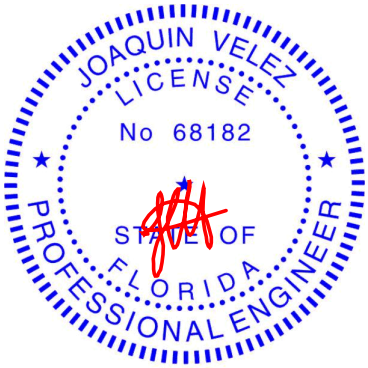

Joaquin Velez PE No.68182
MiTek Inc. DBA MiTek USA FL Cert 6634
16023 Swingley Ridge Rd. Chesterfield, MO 63017
Date:
February 25,2025

WARNING - Verify design parameters and READ NOTES ON THIS AND INCLUDED MITEK REFERENCE PAGE MII-7473 rev. 1/2/2023 BEFORE USE.
Design valid for use only with MiTek® connectors. This design is based only upon parameters shown, and is for an individual building component, not a truss system. Before use, the building designer must verify the applicability of design parameters and properly incorporate this design into the overall building design. Bracing indicated is to prevent buckling of individual truss web and/or chord members only. Additional temporary and permanent bracing is always required for stability and to prevent collapse with possible personal injury and property damage. For general guidance regarding the fabrication, storage, delivery, erection and bracing of trusses and truss systems, see **ANSI/TPI1 Quality Criteria and DSB-22** available from Truss Plate Institute (www.tpinst.org) and **BCSI Building Component Safety Information** available from the Structural Building Component Association (www.sbcscomponents.com)

MiTek®
16023 Swingley Ridge Rd.
Chesterfield, MO 63017
314.434.1200 / MiTek-US.com

Job	Truss	Truss Type	Qty	Ply	Lyons Spec
1812-A	V1	Valley	1	1	T36483012 Job Reference (optional)

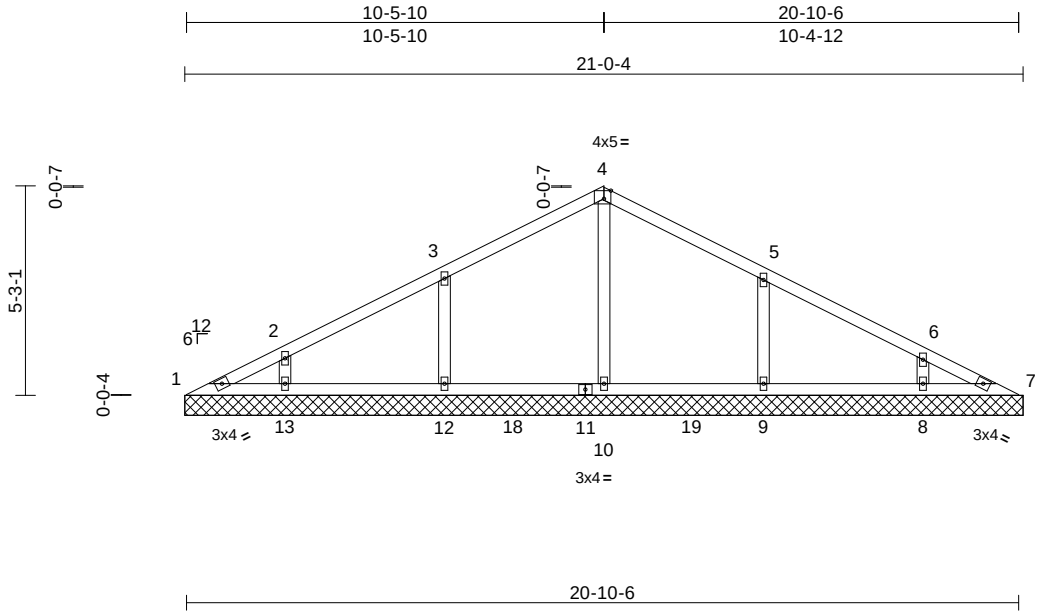

Scale = 1:57.8

Plate Offsets (X, Y): [4:0-2-1,Edge]

Loading	(psf)	Spacing	2-0-0	CSI		DEFL	in	(loc)	l/defl	L/d	PLATES	GRIP
TCLL (roof)	20.0	Plate Grip DOL	1.25	TC	0.20	Vert(LL)	n/a	-	n/a	999	MT20	244/190
TCDL	10.0	Lumber DOL	1.25	BC	0.15	Vert(TL)	n/a	-	n/a	999		
BCLL	0.0*	Rep Stress Incr	YES	WB	0.09	Horiz(TL)	0.00	7	n/a	n/a		
BCDL	10.0	Code	FBC2023/TPI2014	Matrix-MS							Weight: 81 lb	FT = 20%

LUMBER
TOP CHORD 2x4 SP No.2
BOT CHORD 2x4 SP No.2
OTHERS 2x4 SP No.2

BRACING
TOP CHORD Structural wood sheathing directly applied or 6-0-0 oc purlins.
BOT CHORD Rigid ceiling directly applied or 10-0-0 oc bracing.

REACTIONS (size) 1=21-0-4, 7=21-0-4, 8=21-0-4, 9=21-0-4, 10=21-0-4, 12=21-0-4, 13=21-0-4
Max Horiz 1=-114 (LC 13)
Max Uplift 1=-27 (LC 13), 7=-3 (LC 12), 8=-140 (LC 13), 9=-205 (LC 13), 12=-203 (LC 12), 13=-144 (LC 12)
Max Grav 1=72 (LC 20), 7=71 (LC 1), 8=296 (LC 2), 9=373 (LC 28), 10=368 (LC 19), 12=374 (LC 27), 13=297 (LC 2)

FORCES (lb) - Maximum Compression/Maximum Tension
TOP CHORD 1-2=-134/64, 2-3=-88/99, 3-4=-88/209, 4-5=-88/209, 5-6=-62/60, 6-7=-86/39
BOT CHORD 1-13=-28/102, 12-13=-28/96, 10-12=-28/96, 9-10=-28/96, 8-9=-28/96, 7-8=-28/96
WEBS 4-10=-203/21, 3-12=-267/314, 2-13=-209/244, 5-9=-267/317, 6-8=-210/244

NOTES
1) Unbalanced roof live loads have been considered for this design.
2) Wind: ASCE 7-22; Vult=130mph (3-second gust) Vasd=101mph; TCDL=5.0psf; BCDL=5.0psf; h=25ft; Cat. II; Exp C; Enclosed; MWFRS (envelope) exterior (2) zone and C-C Zone3 zone; cantilever left and right exposed ; end vertical left and right exposed;C-C for members and forces & MWFRS for reactions shown; Lumber DOL=1.60 plate grip DOL=1.60
3) Truss designed for wind loads in the plane of the truss only. For studs exposed to wind (normal to the face), see Standard Industry Gable End Details as applicable, or consult qualified building designer as per ANSI/TPI 1.
4) Building Designer / Project engineer responsible for verifying applied roof live load shown covers rain loading requirements specific to the use of this truss component.
5) All plates are 2x4 (||) MT20 unless otherwise indicated.
6) Gable requires continuous bottom chord bearing.
7) Gable studs spaced at 4-0-0 oc.
8) This truss has been designed for a 10.0 psf bottom chord live load nonconcurrent with any other live loads.
9) * This truss has been designed for a live load of 20.0psf on the bottom chord in all areas where a rectangle 3-06-00 tall by 2-00-00 wide will fit between the bottom chord and any other members, with BCDL = 10.0psf.
10) All bearings are assumed to be SP No.2 .
11) Provide mechanical connection (by others) of truss to bearing plate capable of withstanding 27 lb uplift at joint 1, 3 lb uplift at joint 7, 203 lb uplift at joint 12, 144 lb uplift at joint 13, 205 lb uplift at joint 9 and 140 lb uplift at joint 8.
12) Beveled plate or shim required to provide full bearing surface with truss chord at joint(s) 1, 7.

LOAD CASE(S) Standard

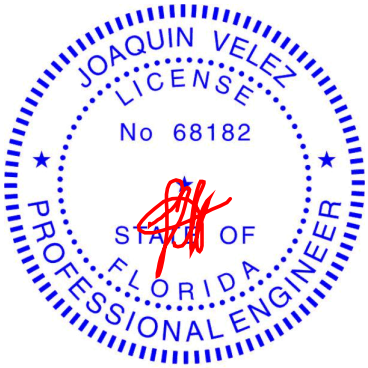

Joaquin Velez PE No.68182
MiTek Inc. DBA MiTek USA FL Cert 6634
16023 Swingley Ridge Rd. Chesterfield, MO 63017
Date:
February 25,2025

WARNING - Verify design parameters and READ NOTES ON THIS AND INCLUDED MITEK REFERENCE PAGE MII-7473 rev. 1/2/2023 BEFORE USE.
Design valid for use only with MiTek® connectors. This design is based only upon parameters shown, and is for an individual building component, not a truss system. Before use, the building designer must verify the applicability of design parameters and properly incorporate this design into the overall building design. Bracing indicated is to prevent buckling of individual truss web and/or chord members only. Additional temporary and permanent bracing is always required for stability and to prevent collapse with possible personal injury and property damage. For general guidance regarding the fabrication, storage, delivery, erection and bracing of trusses and truss systems, see **ANSI/TPI1 Quality Criteria and DSB-22** available from Truss Plate Institute (www.tpinst.org) and **BCSI Building Component Safety Information** available from the Structural Building Component Association (www.sbcscomponents.com)

MiTek®
16023 Swingley Ridge Rd.
Chesterfield, MO 63017
314.434.1200 / MiTek-US.com

Job	Truss	Truss Type	Qty	Ply	Lyons Spec
1812-A	V2	Valley	1	1	T36483013
					Job Reference (optional)

19 Lumber, Inc., Old Town, FL - 32680, Run: 8.83 S Feb 18 2025 Print: 8.830 S Feb 18 2025 MiTek Industries, Inc. Mon Feb 24 08:17:31 Page: 1

ID:nS23WzWuNbEI8RfDJ9MIVAzgaca-RfC?PsB70Hq3NSgPqnL8w3uITXbGKWrCDoi7J4zJC?f

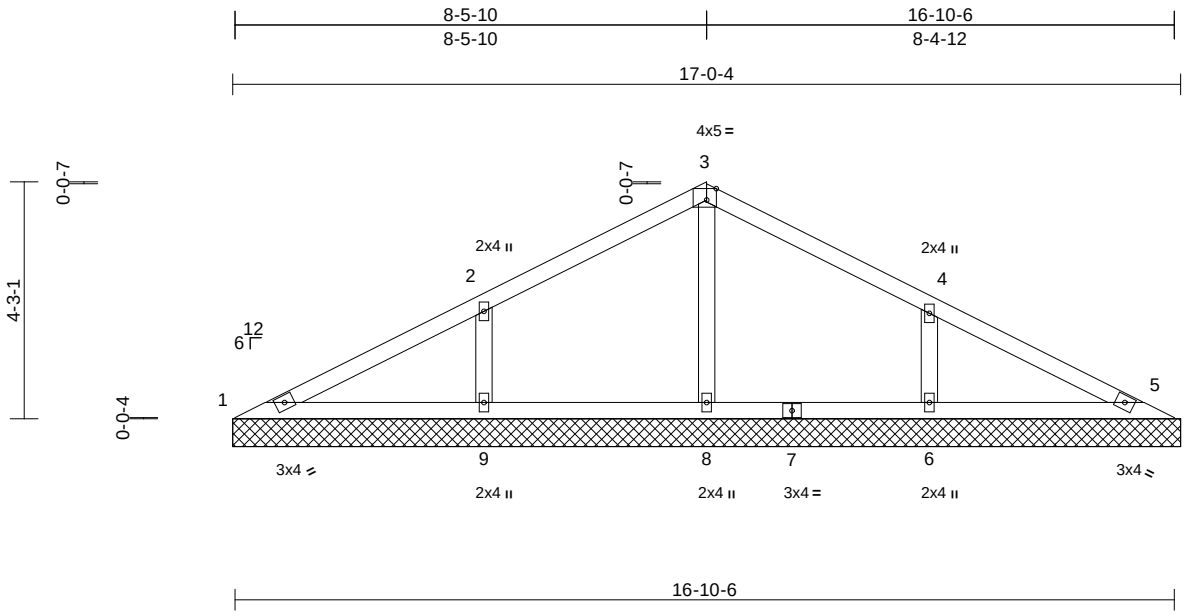

Scale = 1:41.4

Plate Offsets (X, Y): [3:0-2-1,Edge]

Loading	(psf)	Spacing	2-0-0	CSI		DEFL	in	(loc)	l/defl	L/d	PLATES	GRIP
TCLL (roof)	20.0	Plate Grip DOL	1.25	TC	0.28	Vert(LL)	n/a	-	n/a	999	MT20	244/190
TCDL	10.0	Lumber DOL	1.25	BC	0.14	Vert(TL)	n/a	-	n/a	999		
BCLL	0.0*	Rep Stress Incr	YES	WB	0.12	Horiz(TL)	-0.01	5	n/a	n/a		
BCDL	10.0	Code	FBC2023/TPI2014	Matrix-MS							Weight: 62 lb	FT = 20%

LUMBER

TOP CHORD 2x4 SP No.2
BOT CHORD 2x4 SP No.2
OTHERS 2x4 SP No.2

BRACING

TOP CHORD Structural wood sheathing directly applied or 10-0-0 oc purlins.
BOT CHORD Rigid ceiling directly applied or 6-0-0 oc bracing.

REACTIONS (size) 1=17-0-4, 5=17-0-4, 6=17-0-4, 8=17-0-4, 9=17-0-4
Max Horiz 1=96 (LC 12)
Max Uplift 1=-18 (LC 26), 6=-219 (LC 13), 8=-33 (LC 12), 9=-225 (LC 12)
Max Grav 1=95 (LC 25), 5=0 (LC 3), 6=386 (LC 26), 8=490 (LC 1), 9=399 (LC 25)

FORCES (lb) - Maximum Compression/Maximum Tension
TOP CHORD 1-2=-140/309, 2-3=0/294, 3-4=0/295, 4-5=-203/308
BOT CHORD 1-9=-222/183, 8-9=-222/183, 6-8=-222/183, 5-6=-222/183
WEBS 3-8=-429/183, 2-9=-283/320, 4-6=-277/318

NOTES

1) Unbalanced roof live loads have been considered for this design.
2) Wind: ASCE 7-22; Vult=130mph (3-second gust) Vasd=101mph; TCDL=5.0psf; BCDL=5.0psf; h=25ft; Cat. II; Exp C; Enclosed; MWFRS (envelope) exterior (2) zone and C-C Zone3 zone; cantilever left and right exposed ; end vertical left and right exposed;C-C for members and forces & MWFRS for reactions shown; Lumber DOL=1.60 plate grip DOL=1.60
3) Truss designed for wind loads in the plane of the truss only. For studs exposed to wind (normal to the face), see Standard Industry Gable End Details as applicable, or consult qualified building designer as per ANSI/TPI 1.
4) Building Designer / Project engineer responsible for verifying applied roof live load shown covers rain loading requirements specific to the use of this truss component.
5) Gable requires continuous bottom chord bearing.
6) Gable studs spaced at 4-0-0 oc.
7) This truss has been designed for a 10.0 psf bottom chord live load nonconcurrent with any other live loads.
8) * This truss has been designed for a live load of 20.0psf on the bottom chord in all areas where a rectangle 3-06-00 tall by 2-00-00 wide will fit between the bottom chord and any other members.
9) All bearings are assumed to be SP No.2 .
10) Provide mechanical connection (by others) of truss to bearing plate capable of withstanding 18 lb uplift at joint 1, 33 lb uplift at joint 8, 225 lb uplift at joint 9 and 219 lb uplift at joint 6.
11) Beveled plate or shim required to provide full bearing surface with truss chord at joint(s) 1, 14.

LOAD CASE(S) Standard

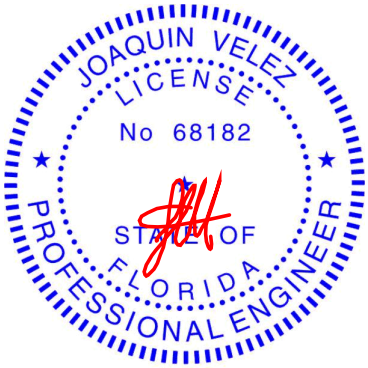

Joaquin Velez PE No.68182
MiTek Inc. DBA MiTek USA FL Cert 6634
16023 Swingley Ridge Rd. Chesterfield, MO 63017

Date: February 25,2025

WARNING - Verify design parameters and READ NOTES ON THIS AND INCLUDED MITEK REFERENCE PAGE MII-7473 rev. 1/2/2023 BEFORE USE.
Design valid for use only with MiTek® connectors. This design is based only upon parameters shown, and is for an individual building component, not a truss system. Before use, the building designer must verify the applicability of design parameters and properly incorporate this design into the overall building design. Bracing indicated is to prevent buckling of individual truss web and/or chord members only. Additional temporary and permanent bracing is always required for stability and to prevent collapse with possible personal injury and property damage. For general guidance regarding the fabrication, storage, delivery, erection and bracing of trusses and truss systems, see **ANSI/TPI1 Quality Criteria and DSB-22** available from Truss Plate Institute (www.tpinst.org) and **BCSI Building Component Safety Information** available from the Structural Building Component Association (www.sbcscomponents.com)

MiTek®
16023 Swingley Ridge Rd.
Chesterfield, MO 63017
314.434.1200 / MiTek-US.com

Job	Truss	Truss Type	Qty	Ply	Lyons Spec
1812-A	V3	Valley	1	1	T36483014 Job Reference (optional)

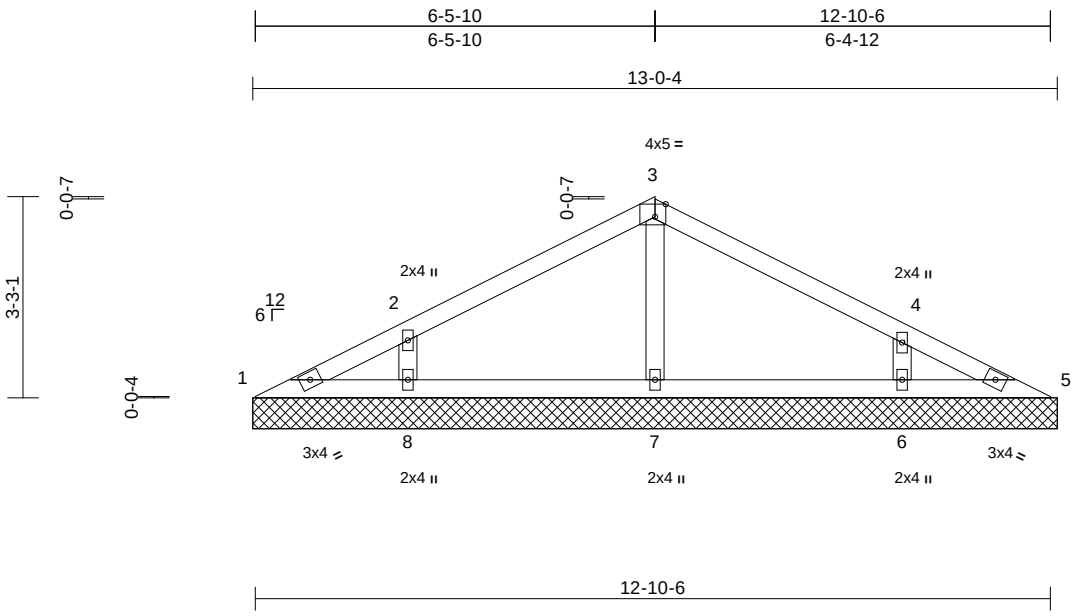

Scale = 1:37.3

Plate Offsets (X, Y): [3:0-2-1,Edge]

Loading	(psf)	Spacing	2-0-0	CSI		DEFL	in	(loc)	l/defl	L/d	PLATES	GRIP
TCLL (roof)	20.0	Plate Grip DOL	1.25	TC	0.22	Vert(LL)	n/a	-	n/a	999	MT20	244/190
TCDL	10.0	Lumber DOL	1.25	BC	0.11	Vert(TL)	n/a	-	n/a	999		
BCLL	0.0*	Rep Stress Incr	YES	WB	0.06	Horiz(TL)	0.00	5	n/a	n/a		
BCDL	10.0	Code	FBC2023/TPI2014	Matrix-MS							Weight: 45 lb	FT = 20%

LUMBER
TOP CHORD 2x4 SP No.2
BOT CHORD 2x4 SP No.2
OTHERS 2x4 SP No.2

BRACING
TOP CHORD Structural wood sheathing directly applied or 10-0-0 oc purlins.
BOT CHORD Rigid ceiling directly applied or 6-0-0 oc bracing.

REACTIONS (size) 1=13-0-4, 5=13-0-4, 6=13-0-4, 7=13-0-4, 8=13-0-4
Max Horiz 1=-69 (LC 13)
Max Uplift 1=-16 (LC 13), 5=-1 (LC 1), 6=-176 (LC 13), 7=-45 (LC 12), 8=-173 (LC 12)
Max Grav 1=35 (LC 25), 5=0 (LC 13), 6=321 (LC 26), 7=421 (LC 1), 8=303 (LC 25)

FORCES (lb) - Maximum Compression/Maximum Tension
TOP CHORD 1-2=-120/183, 2-3=0/186, 3-4=0/186, 4-5=-122/185
BOT CHORD 1-8=-122/128, 7-8=-122/128, 6-7=-122/128, 5-6=-122/128
WEBS 3-7=-342/223, 2-8=-244/361, 4-6=-248/364

NOTES
1) Unbalanced roof live loads have been considered for this design.
2) Wind: ASCE 7-22; Vult=130mph (3-second gust) Vasd=101mph; TCDL=5.0psf; BCDL=5.0psf; h=25ft; Cat. II; Exp C; Enclosed; MWFRS (envelope) exterior (2) zone and C-C Zone3 zone; cantilever left and right exposed ; end vertical left and right exposed;C-C for members and forces & MWFRS for reactions shown; Lumber DOL=1.60 plate grip DOL=1.60
3) Truss designed for wind loads in the plane of the truss only. For studs exposed to wind (normal to the face), see Standard Industry Gable End Details as applicable, or consult qualified building designer as per ANSI/TPI 1.
4) Building Designer / Project engineer responsible for verifying applied roof live load shown covers rain loading requirements specific to the use of this truss component.
5) Gable requires continuous bottom chord bearing.
6) Gable studs spaced at 4-0-0 oc.
7) This truss has been designed for a 10.0 psf bottom chord live load nonconcurrent with any other live loads.
8) * This truss has been designed for a live load of 20.0psf on the bottom chord in all areas where a rectangle 3-06-00 tall by 2-00-00 wide will fit between the bottom chord and any other members.
9) All bearings are assumed to be SP No.2 .
10) Provide mechanical connection (by others) of truss to bearing plate capable of withstanding 16 lb uplift at joint 1, 1 lb uplift at joint 5, 45 lb uplift at joint 7, 173 lb uplift at joint 8, 176 lb uplift at joint 6 and 1 lb uplift at joint 5.
11) Beveled plate or shim required to provide full bearing surface with truss chord at joint(s) 1, 5, 13.

LOAD CASE(S) Standard

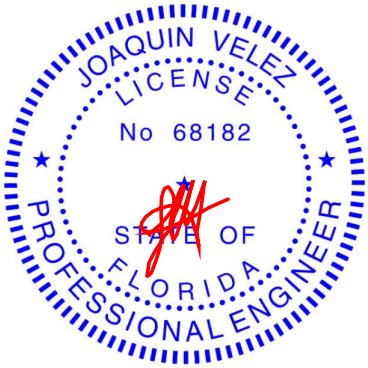

Joaquin Velez PE No.68182
MiTek Inc. DBA MiTek USA FL Cert 6634
16023 Swingley Ridge Rd. Chesterfield, MO 63017
Date:
February 25,2025

WARNING - Verify design parameters and READ NOTES ON THIS AND INCLUDED MITEK REFERENCE PAGE MII-7473 rev. 1/2/2023 BEFORE USE.
Design valid for use only with MiTek® connectors. This design is based only upon parameters shown, and is for an individual building component, not a truss system. Before use, the building designer must verify the applicability of design parameters and properly incorporate this design into the overall building design. Bracing indicated is to prevent buckling of individual truss web and/or chord members only. Additional temporary and permanent bracing is always required for stability and to prevent collapse with possible personal injury and property damage. For general guidance regarding the fabrication, storage, delivery, erection and bracing of trusses and truss systems, see **ANSI/TPI1 Quality Criteria and DSB-22** available from Truss Plate Institute (www.tpinst.org) and **BCSI Building Component Safety Information** available from the Structural Building Component Association (www.sbcscomponents.com)

MiTek®
16023 Swingley Ridge Rd.
Chesterfield, MO 63017
314.434.1200 / MiTek-US.com

Job	Truss	Truss Type	Qty	Ply	Lyons Spec
1812-A	V4	Valley	2	1	T36483015 Job Reference (optional)

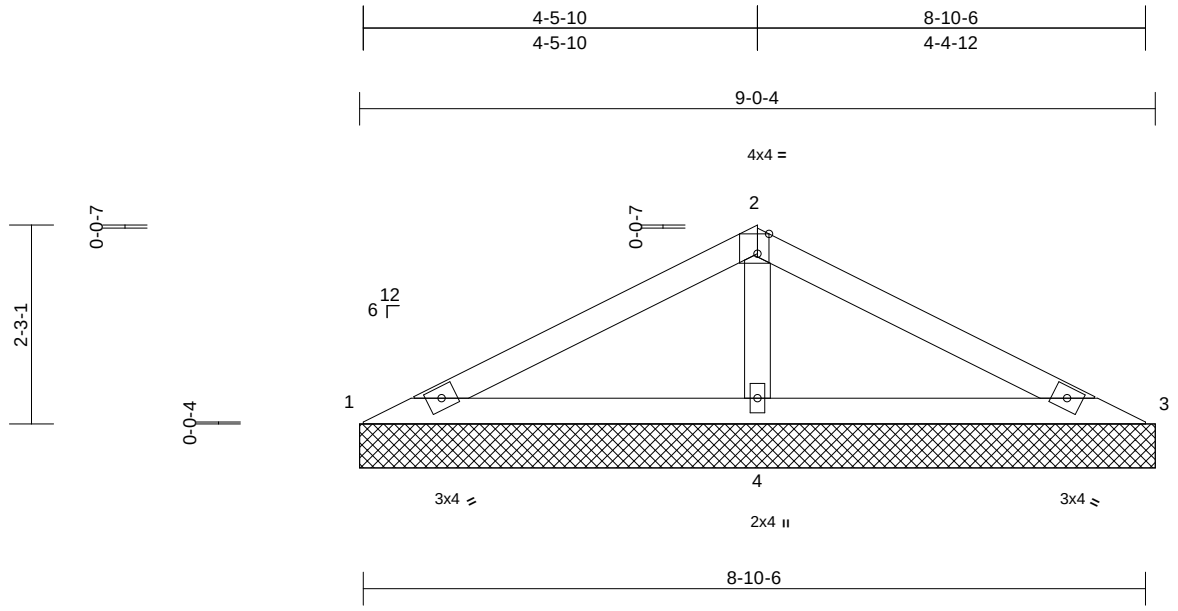

Scale = 1:26.1

Plate Offsets (X, Y): [2:0-1-9,Edge]

Loading	(psf)	Spacing	2-0-0	CSI		DEFL	in	(loc)	l/defl	L/d	PLATES	GRIP
TCLL (roof)	20.0	Plate Grip DOL	1.25	TC	0.25	Vert(LL)	n/a	-	n/a	999	MT20	244/190
TCDL	10.0	Lumber DOL	1.25	BC	0.35	Vert(TL)	n/a	-	n/a	999		
BCLL	0.0*	Rep Stress Incr	YES	WB	0.12	Horiz(TL)	0.00	9	n/a	n/a		
BCDL	10.0	Code	FBC2023/TPI2014	Matrix-MP							Weight: 28 lb	FT = 20%

LUMBER
TOP CHORD 2x4 SP No.2
BOT CHORD 2x4 SP No.2
OTHERS 2x4 SP No.2

BRACING
TOP CHORD Structural wood sheathing directly applied or 8-2-13 oc purlins.
BOT CHORD Rigid ceiling directly applied or 6-0-0 oc bracing.

REACTIONS (size) 1=9-0-4, 3=9-0-4, 4=9-0-4
Max Horiz 1=47 (LC 12)
Max Uplift 1=-91 (LC 26), 3=-1 (LC 13), 4=-228 (LC 13)
Max Grav 1=90 (LC 25), 3=1 (LC 26), 4=722 (LC 1)

FORCES (lb) - Maximum Compression/Maximum Tension
TOP CHORD 1-2=-434/457, 2-3=-543/474
BOT CHORD 1-4=-393/523, 3-4=-402/538
WEBS 2-4=-564/662

NOTES
1) Unbalanced roof live loads have been considered for this design.
2) Wind: ASCE 7-22; Vult=130mph (3-second gust) Vasd=101mph; TCDL=5.0psf; BCDL=5.0psf; h=25ft; Cat. II; Exp C; Enclosed; MWFRS (envelope) exterior (2) zone and C-C Zone3 zone; cantilever left and right exposed ; end vertical left and right exposed;C-C for members and forces & MWFRS for reactions shown; Lumber DOL=1.60 plate grip DOL=1.60
3) Truss designed for wind loads in the plane of the truss only. For studs exposed to wind (normal to the face), see Standard Industry Gable End Details as applicable, or consult qualified building designer as per ANSI/TPI 1.
4) Building Designer / Project engineer responsible for verifying applied roof live load shown covers rain loading requirements specific to the use of this truss component.
5) Gable requires continuous bottom chord bearing.
6) Gable studs spaced at 4-0-0 oc.
7) This truss has been designed for a 10.0 psf bottom chord live load nonconcurrent with any other live loads.
8) * This truss has been designed for a live load of 20.0psf on the bottom chord in all areas where a rectangle 3-06-00 tall by 2-00-00 wide will fit between the bottom chord and any other members.
9) All bearings are assumed to be SP No.2 .
10) Provide mechanical connection (by others) of truss to bearing plate capable of withstanding 91 lb uplift at joint 1, 1 lb uplift at joint 3, 228 lb uplift at joint 4 and 1 lb uplift at joint 3.
11) Beveled plate or shim required to provide full bearing surface with truss chord at joint(s) 1, 3, 9.

LOAD CASE(S) Standard

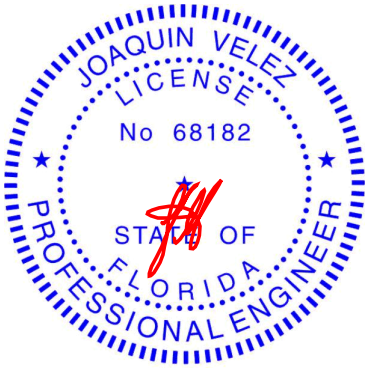

Joaquin Velez PE No.68182
MiTek Inc. DBA MiTek USA FL Cert 6634
16023 Swingley Ridge Rd. Chesterfield, MO 63017
Date:

February 25,2025

WARNING - Verify design parameters and READ NOTES ON THIS AND INCLUDED MITEK REFERENCE PAGE MII-7473 rev. 1/2/2023 BEFORE USE.
Design valid for use only with MiTek® connectors. This design is based only upon parameters shown, and is for an individual building component, not a truss system. Before use, the building designer must verify the applicability of design parameters and properly incorporate this design into the overall building design. Bracing indicated is to prevent buckling of individual truss web and/or chord members only. Additional temporary and permanent bracing is always required for stability and to prevent collapse with possible personal injury and property damage. For general guidance regarding the fabrication, storage, delivery, erection and bracing of trusses and truss systems, see **ANSI/TPI1 Quality Criteria and DSB-22** available from Truss Plate Institute (www.tpinst.org) and **BCSI Building Component Safety Information** available from the Structural Building Component Association (www.sbcscomponents.com)

MiTek®
16023 Swingley Ridge Rd.
Chesterfield, MO 63017
314.434.1200 / MiTek-US.com

Job	Truss	Truss Type	Qty	Ply	Lyons Spec
1812-A	V5	Valley	2	1	T36483016 Job Reference (optional)

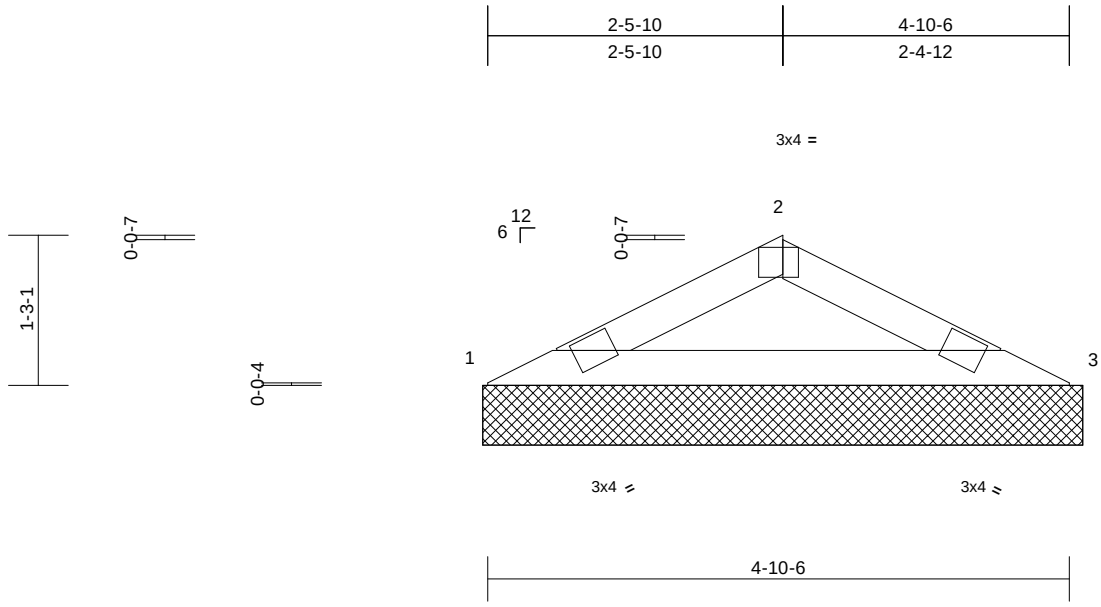

Scale = 1:15.9

Plate Offsets (X, Y): [2:0-1-9,Edge]

Loading	(psf)	Spacing	2-0-0	CSI		DEFL	in	(loc)	l/defl	L/d	PLATES	GRIP
TCLL (roof)	20.0	Plate Grip DOL	1.25	TC	0.25	Vert(LL)	n/a	-	n/a	999	MT20	244/190
TCDL	10.0	Lumber DOL	1.25	BC	0.15	Vert(TL)	n/a	-	n/a	999		
BCLL	0.0*	Rep Stress Incr	YES	WB	0.00	Horiz(TL)	-0.01	3	n/a	n/a		
BCDL	10.0	Code	FBC2023/TPI2014	Matrix-MP							Weight: 13 lb	FT = 20%

LUMBER
TOP CHORD 2x4 SP No.2
BOT CHORD 2x4 SP No.2

BRACING
TOP CHORD Structural wood sheathing directly applied or 4-10-6 oc purlins.
BOT CHORD Rigid ceiling directly applied or 10-0-0 oc bracing.

REACTIONS (lb/size) 1=201/5-0-4, 3=201/5-0-4
Max Horiz 1=24 (LC 12)
Max Uplift 1=-64 (LC 12), 3=-64 (LC 13)

FORCES (lb) - Max. Comp./Max. Ten. - All forces 250 (lb) or less except when shown.
TOP CHORD 1-2=-373/513, 2-3=-235/347
BOT CHORD 1-3=-434/328

NOTES
1) Unbalanced roof live loads have been considered for this design.
2) Wind: ASCE 7-22; Vult=130mph (3-second gust) Vasd=101mph; TCDL=5.0psf; BCDL=5.0psf; h=25ft; Cat. II; Exp C; Enclosed; MWFRS (envelope) exterior (2) zone and C-C Zone3 zone; cantilever left and right exposed ; end vertical left and right exposed;C-C for members and forces & MWFRS for reactions shown; Lumber DOL=1.60 plate grip DOL=1.60
3) Truss designed for wind loads in the plane of the truss only. For studs exposed to wind (normal to the face), see Standard Industry Gable End Details as applicable, or consult qualified building designer as per ANSI/TPI 1.
4) Building Designer / Project engineer responsible for verifying applied roof live load shown covers rain loading requirements specific to the use of this truss component.
5) Gable requires continuous bottom chord bearing.
6) Gable studs spaced at 4-0-0 oc.
7) This truss has been designed for a 10.0 psf bottom chord live load nonconcurrent with any other live loads.
8) * This truss has been designed for a live load of 20.0psf on the bottom chord in all areas where a rectangle 3-06-00 tall by 2-00-00 wide will fit between the bottom chord and any other members.
9) Provide mechanical connection (by others) of truss to bearing plate capable of withstanding 64 lb uplift at joint 1 and 64 lb uplift at joint 3.
10) Beveled plate or shim required to provide full bearing surface with truss chord at joint(s) 1, 3.

LOAD CASE(S) Standard

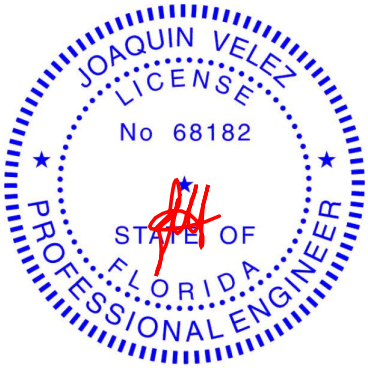

Joaquin Velez PE No.68182
MiTek Inc. DBA MiTek USA FL Cert 6634
16023 Swingley Ridge Rd. Chesterfield, MO 63017
Date:
February 25,2025

WARNING - Verify design parameters and READ NOTES ON THIS AND INCLUDED MITEK REFERENCE PAGE MII-7473 rev. 1/2/2023 BEFORE USE.
Design valid for use only with MiTek® connectors. This design is based only upon parameters shown, and is for an individual building component, not a truss system. Before use, the building designer must verify the applicability of design parameters and properly incorporate this design into the overall building design. Bracing indicated is to prevent buckling of individual truss web and/or chord members only. Additional temporary and permanent bracing is always required for stability and to prevent collapse with possible personal injury and property damage. For general guidance regarding the fabrication, storage, delivery, erection and bracing of trusses and truss systems, see **ANSI/TPI1 Quality Criteria and DSB-22** available from Truss Plate Institute (www.tpinst.org) and **BCSI Building Component Safety Information** available from the Structural Building Component Association (www.sbcscomponents.com)

MiTek®
16023 Swingley Ridge Rd.
Chesterfield, MO 63017
314.434.1200 / MiTek-US.com

Symbols

PLATE LOCATION AND ORIENTATION

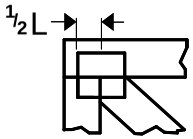

Center plate on joint unless x, y offsets are indicated. Dimensions are in ft-in-sixteenths. Apply plates to both sides of truss and fully embed teeth.

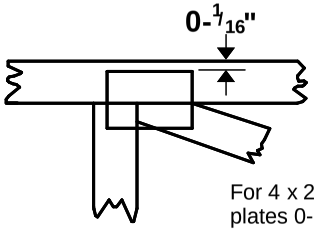

For 4 x 2 orientation, locate plates 0- 1/16" from outside edge of truss.

This symbol indicates the required direction of slots in connector plates.

* Plate location details available in MiTek software or upon request.

PLATE SIZE

4 x 4

The first dimension is the plate width measured perpendicular to slots. Second dimension is the length parallel to slots.

LATERAL BRACING LOCATION

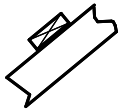

Indicated by symbol shown and/or by text in the bracing section of the output. Use T or I bracing if indicated.

BEARING

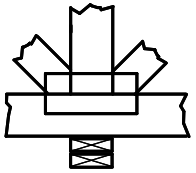

Indicates location where bearings (supports) occur. Icons vary but reaction section indicates joint number/letter where bearings occur. Min size shown is for crushing only.

Industry Standards:

ANSI/TPI1: National Design Specification for Metal Plate Connected Wood Truss Construction.
DSB-22: Design Standard for Bracing.
BCSI: Building Component Safety Information, Guide to Good Practice for Handling, Installing, Restraining & Bracing of Metal Plate Connected Wood Trusses.

Numbering System

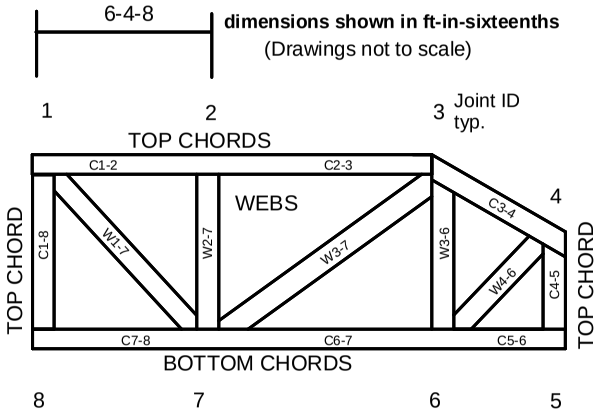

JOINTS ARE GENERALLY NUMBERED/LETTERED CLOCKWISE AROUND THE TRUSS STARTING AT THE JOINT FARTHEST TO THE LEFT.

CHORDS AND WEBS ARE IDENTIFIED BY END JOINT NUMBERS/LETTERS.

Product Code Approvals

ICC-ES Reports:

ESR-1988, ESR-2362, ESR-2685, ESR-3282
ESR-4722, ESL-1388

Design General Notes

Trusses are designed for wind loads in the plane of the truss unless otherwise shown.

Lumber design values are in accordance with ANSI/TPI 1 section 6.3 These truss designs rely on lumber values established by others.

© 2023 MiTek® All Rights Reserved

MiTek®

General Safety Notes

Failure to Follow Could Cause Property Damage or Personal Injury

1. Additional stability bracing for truss system, e.g. diagonal or X-bracing, is always required. See BCSI.
2. Truss bracing must be designed by an engineer. For wide truss spacing, individual lateral braces themselves may require bracing, or alternative Tor I bracing should be considered.
3. Never exceed the design loading shown and never stack materials on inadequately braced trusses.
4. Provide copies of this truss design to the building designer, erection supervisor, property owner and all other interested parties.
5. Cut members to bear tightly against each other.
6. Place plates on each face of truss at each joint and embed fully. Knots and wane at joint locations are regulated by ANSI/TPI 1.
7. Design assumes trusses will be suitably protected from the environment in accord with ANSI/TPI 1.
8. Unless otherwise noted, moisture content of lumber shall not exceed 19% at time of fabrication.
9. Unless expressly noted, this design is not applicable for use with fire retardant, preservative treated, or green lumber.
10. Camber is a non-structural consideration and is the responsibility of truss fabricator. General practice is to camber for dead load deflection.
11. Plate type, size, orientation and location dimensions indicated are minimum plating requirements.
12. Lumber used shall be of the species and size, and in all respects, equal to or better than that specified.
13. Top chords must be sheathed or purlins provided at spacing indicated on design.
14. Bottom chords require lateral bracing at 10 ft. spacing, or less, if no ceiling is installed, unless otherwise noted.
15. Connections not shown are the responsibility of others.
16. Do not cut or alter truss member or plate without prior approval of an engineer.
17. Install and load vertically unless indicated otherwise.
18. Use of green or treated lumber may pose unacceptable environmental, health or performance risks. Consult with project engineer before use.
19. Review all portions of this design (front, back, words and pictures) before use. Reviewing pictures alone is not sufficient.
20. Design assumes manufacture in accordance with ANSI/TPI 1 Quality Criteria.
21. The design does not take into account any dynamic or other loads other than those expressly stated.