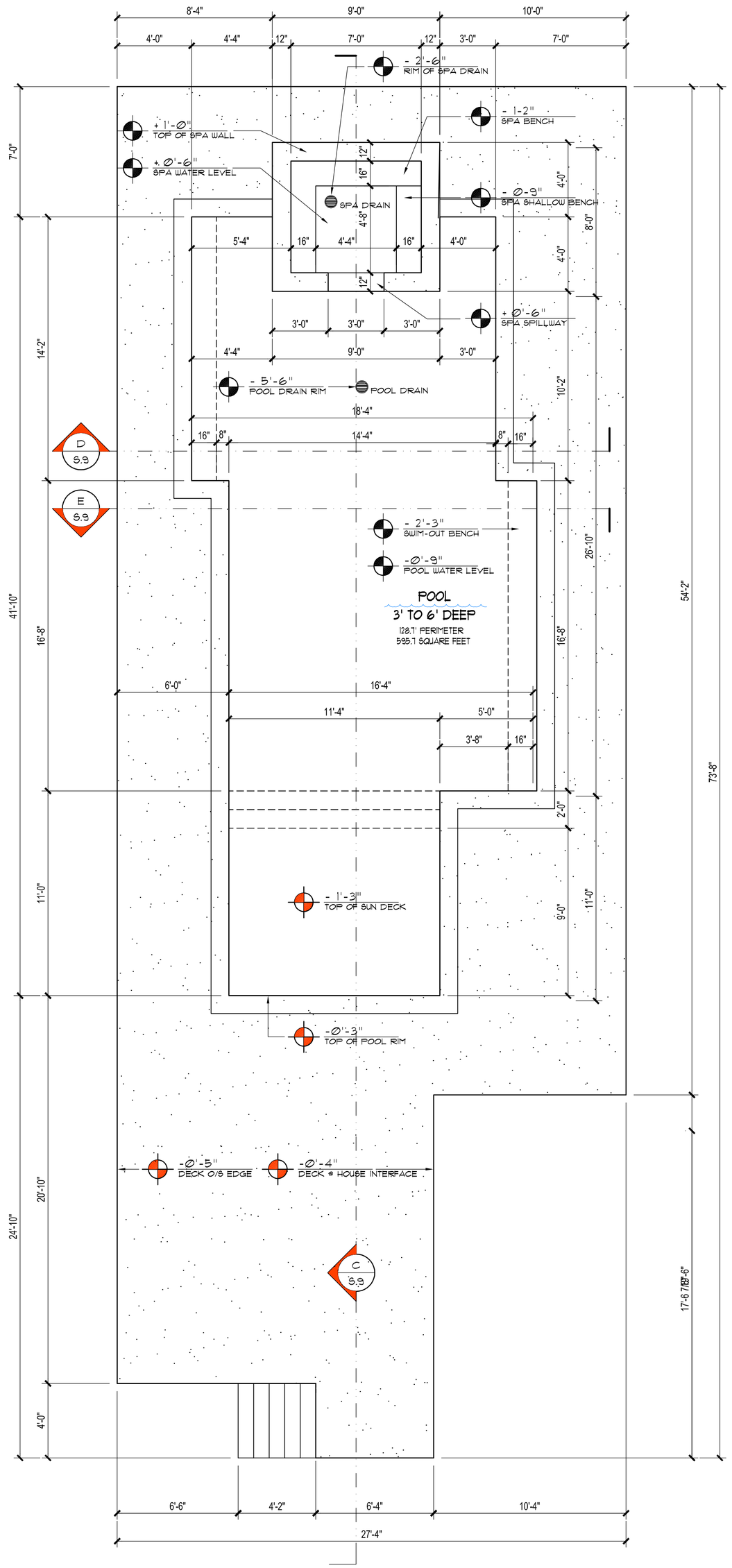

POOL PLAN

SCALE: 1/4" = 1'-0"

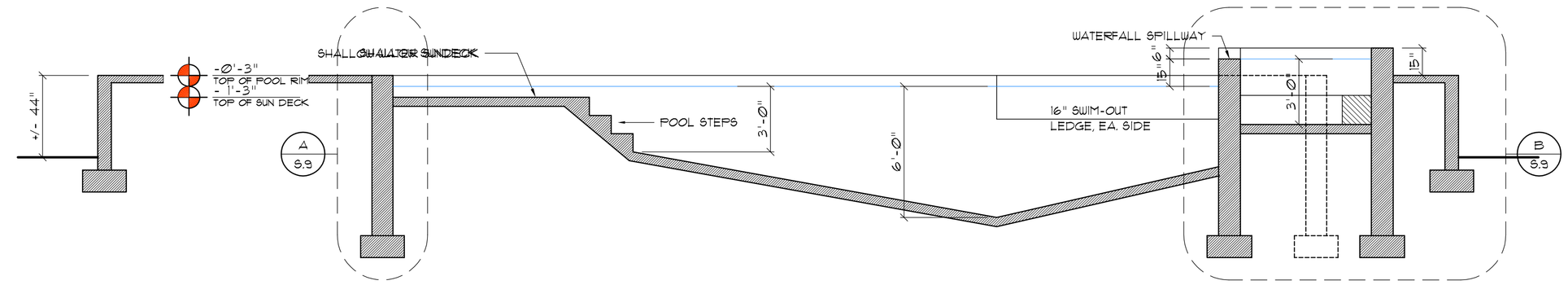

SECTION C

SCALE: 3/4" = 1'-0"

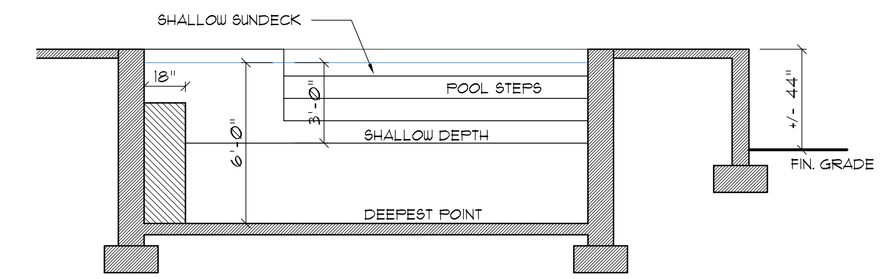

SECTION D

SCALE: 3/4" = 1'-0"

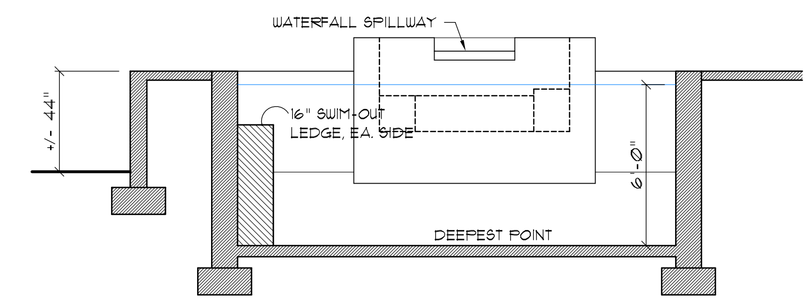

SECTION E

SCALE: 3/4" = 1'-0"

GENERAL NOTES:

1. REFER TO THE NOTES ON SHEET NO. 5.0
2. PROVISIONS SHALL BE MADE FOR THE SAFE STORAGE OF CHEMICALS.
3. FOOD AND FACILITIES SHALL BE NO CLOSER THAN 12 FEET FROM WATER'S EDGE
4. TILE ON THE DECK INCLUDING COPING, OPEN GUTTERS, POOL, TOILET FLOORS AND ANY OTHER HORIZONTAL SURFACE SHALL BE SLIP RESISTANT AND UNGLAZED.
5. ALL PIPING SHALL BE PVC SCH. 40 MINIMUM UNLESS OTHERWISE SPECIFIED.
6. THIS DRAWING IS FOR THE PURPOSE OF OBTAINING A POOL BUILDING PERMIT AND FOR OBTAINING AN OPERATING PERMIT FROM THE LOCAL HEALTH DEPARTMENT. DECKS, FENCES AND OTHER STRUCTURES, ETC. ARE NOT A PART OF THIS DESIGN BUT MUST MEET ALL THE REQUIREMENTS AS SET FORTH IN THE PUBLIC HEALTH ADMINISTRATIVE CODE AND ALL OTHER LOCAL BUILDING CODES.
7. DO NOT SCALE THIS DRAWING FOR DIMENSIONS NOT SHOWN. FOR EXACT DIMENSIONS RELATIVE TO DECKS, BUILDINGS, PROPERTY LINES, EASEMENTS, ETC., SEE THE SURVEY, ARCHITECT'S PLANS AND OTHER PERTINENT DOCUMENTS.
8. CONCRETE PATIO (SLOPE DECK @ MIN. 2% MAX. 4%)
9. A MINIMUM OF 1'-0" VERTICAL CLEARANCE MUST BE MAINTAINED ABOVE THE POOL/COPING/DECK AND WATER SURFACE
10. HOSE BIBBS PROVIDED AT LOCATIONS TO REACH ALL PORTIONS OF THE DECK WITH 75' OF HOSE
11. PROVIDE DEPTH MARKERS
12. LOCATE JUNCTION BOX MIN. 10' FROM POOL

CW SUPPLY SHALL HAVE BACK FLOW PREVENTION (REFER TO THE UTILITY PROVIDER STANDARDS).
WASTE DISPOSAL LINE BY THE POOL CONTRACTOR SHALL TERMINATE OUTSIDE OF THE POOL EQUIPMENT ROOM.
SEE THE POOL CONTRACTORS PLAN FOR LINE TERMINATION

SURFACE MATERIALS:
•POOL DECKS: CONCRETE W/ "KOOLKOTE"
•SLIP RESISTANT AND IMPERVIOUS)
•POOL EQUIPMENT ROOM: CONCRETE

NOTE:
POOL SUB-CONTRACTOR SHALL PROVIDE ALL REQUIRED HYDRAULIC ENGINEERING & PIPING PLANS

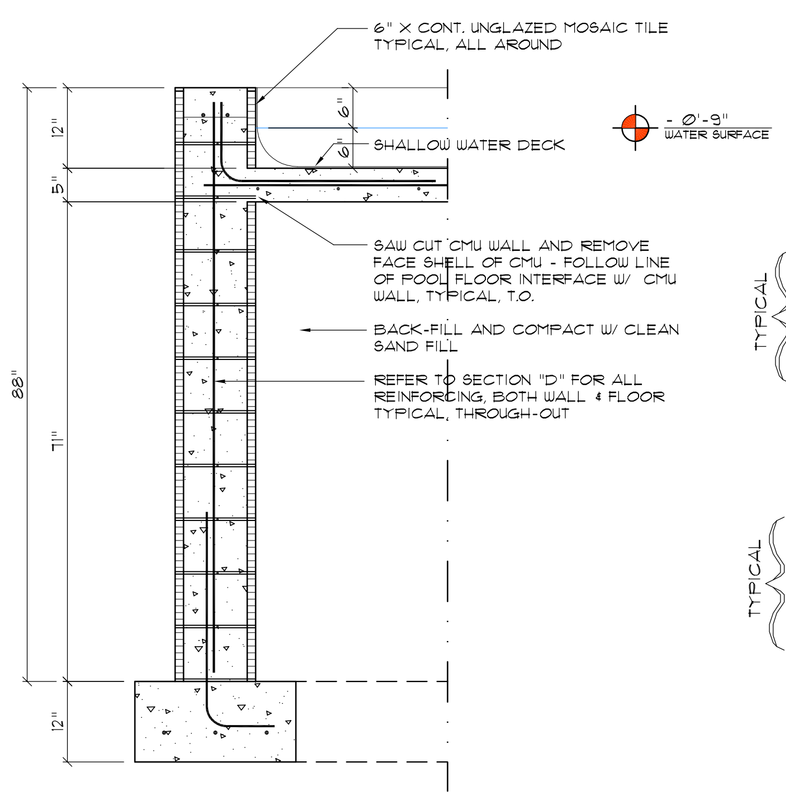

SECTION A

SCALE: 3/4" = 1'-0"

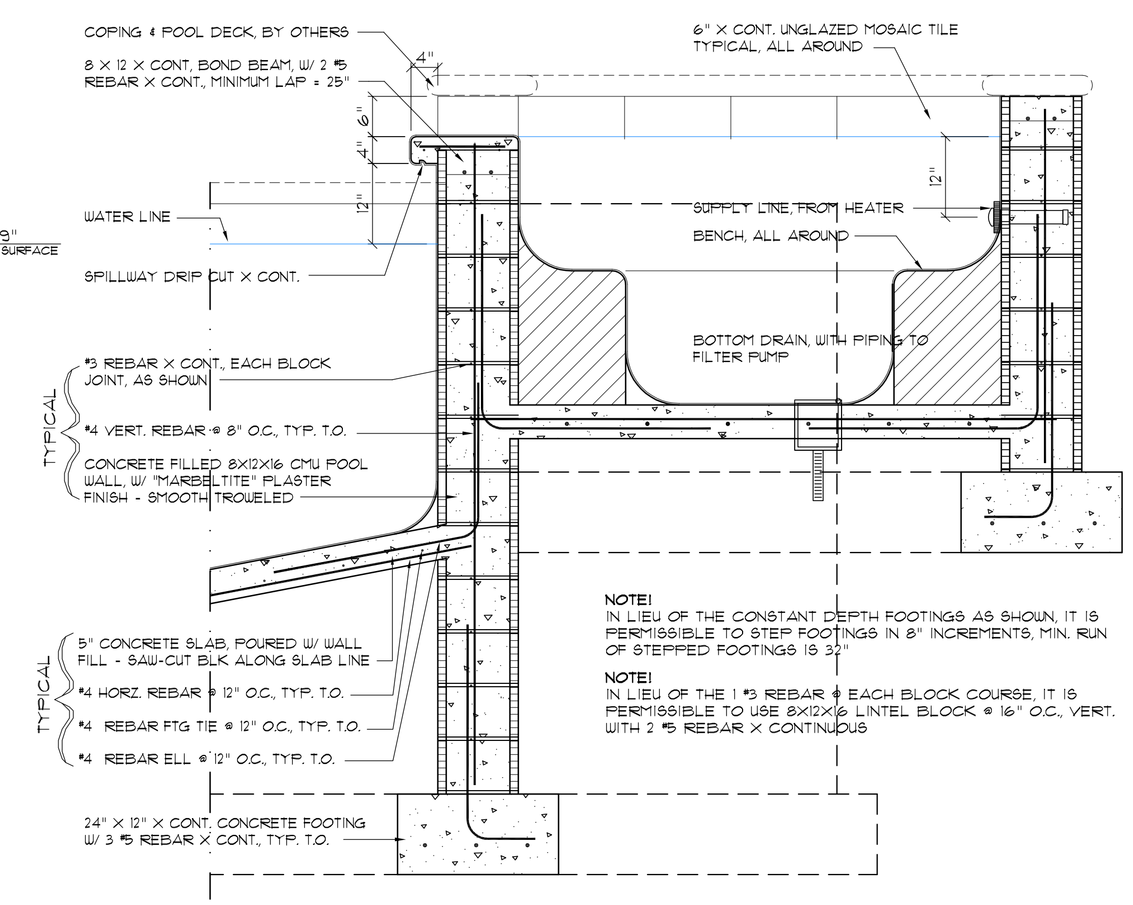

NOTE!
IN LIEU OF THE CONSTANT DEPTH FOOTINGS AS SHOWN, IT IS PERMISSIBLE TO STEP FOOTINGS IN 8" INCREMENTS, MIN. RUN OF STEPPED FOOTINGS IS 32"

NOTE!
IN LIEU OF THE 1 #3 REBAR @ EACH BLOCK COURSE, IT IS PERMISSIBLE TO USE 8X12X16 LINTEL BLOCK @ 16" O.C., VERT. WITH 2 #5 REBAR X CONTINUOUS

SECTION B

SCALE: 3/4" = 1'-0"

These drawings are instruments of service, are the sole property of the architect, and may not be used, copied or reproduced in whole or in part for use on or incorporated within any other job without specific and individual authorization by the architect.

REVISION:

Copyright 2025 © N.P. Geisler, Architect

DRAWN: NPG

CUSTOM RESIDENTIAL DESIGN for:
SVETLANA KHOMICH
COLUMBIA COUNTY, FLORIDA
POOL PLAN / SECTIONS / DETAILS

Celebrating 53 Years of Service
1972 - 2025
N.P. Geisler, Architect
AR0007005
CUSTOM ARCHITECTURAL DESIGN
NICHOLAS PAUL GEISLER ARCHITECT
1758 NW Brown Rd.
Lake City, FL 32055
386-365-4355

DATE: 10 MAY 2025

COMM: 2K2518

SHEET: 5.9

9 OF 10

Nicholas P Geisler Digitally signed by Nicholas P Geisler Date: 2025.06.01 15:11:15 -04'00'

AR0007005