SM-RIB METAL ROOFING PANELS ALTERNATE FASTENER SCHEDULE FOR VARIOUS WIND VELOCITIES MANUFACTURER'S RECOMMENDED FASTENER SCHEDULE FOR BUILDINGS W/<35' MEAN ROOF HEIGHT, MIN. 3/12 PITCH BASED ON ASCE 7-98, EXPOSURE "C"									
ROOF ZONE	FASTENER TYPE	FASTENER SIZE	PLACEMENT TO	100 - 110		120 - 130		140 - 150	
				O/C SPACING	TRIM	O/C SPACING	TRIM	O/C SPACING	TRIM
1	WD. SCREW	#8 X 1 1/2"	WOOD	36"	18"	24"	12"	24"	12"
	MTL. SCR.	#12 X 1" #14 X 7/8"	< 18 GA > 18 GA	36"	18"	24"	12"	24"	12"
2 & 3	WD. SCREW	#8 X 1 1/2"	WOOD	36"	18"	24"	12"	24"	8"
	MTL. SCR.	#12 X 1" #14 X 7/8"	< 18 GA > 18 GA	36"	18"	24"	12"	24"	8"

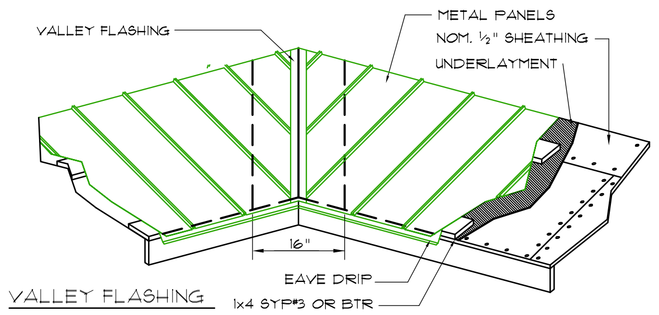

VALLEY FLASHING

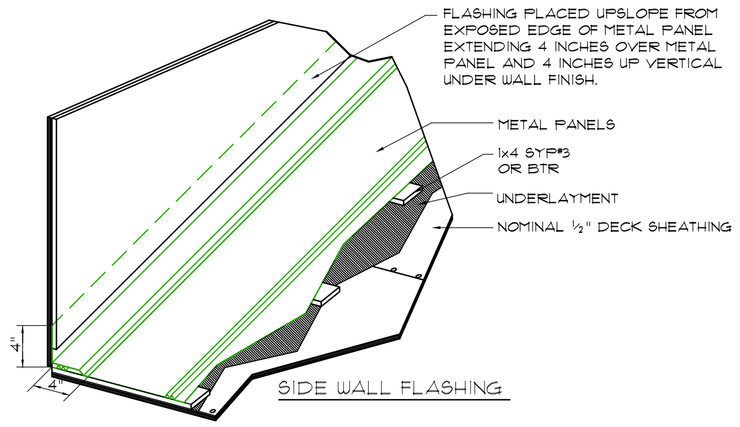

SIDE WALL FLASHING

SM-RIB PANEL INSTALLATION NOTES

UNDERLAYMENT APPLICATION:
FOR ROOF SLOPES FROM 3:12 TO 4:12, UNDERLAYMENT SHALL BE A MIN. OF TWO LAYERS APPLIED AS FOLLWS:
1. 1. STARTING AT THE EAVE, A 19 INCH STRIPE OF UNDERLAYMENT SHALL BE APPLIED PARALLED WITH WITH THE EAVE AND FASTENED SUFFICIENTLY TO STAY IN PLACE.
2. STARTING AT THE EAVE, 36 INCH WIDE STRIPS OF UNDERLAYMENT FELT SHALL BE APPLIED OVERLAPPING SUCCESSIVE SHEETS 19 INCHES AND FASTENED SUFFICIENTLY TO STAY IN PLACE.

FOR ROOF SLOPED 4:12 AND GREATER, UNDERLAYMENT SHALL BE A MIN. OF ONE LAYER OF UNDERLAYMENT FELT APPLIED AS FOLLOWS:
STARTING AT THE EAVE, UNDERLAYMENT SHALL BE APPLIED SHINGLE FASHION PARALLEL TO THE EAVE, LAPPED 2 INCHES, AND FASTENED SUFFICIENTLY TO STAY IN PLACE.
OF ONE LAYER OF UNDERLAYMENT FELT APPLIED AS FOLLOWS:
STARTING AT THE EAVE, UNDERLAYMENT SHALL BE APPLIED SHINGLE FASHION PARALLEL TO THE EAVE, LAPPED 2 INCHES, AND FASTENED SUFFICIENTLY TO STAY IN PLACE.

FOR ROOF SLOPED 4:12 AND GREATER, UNDERLAYMENT SHALL BE A MINIMUM OF ONE LAYER OF UNDERLAYMENT FELT APPLIED AS FOLLOWS:
STARTING AT THE EAVE, UNDERLAYMENT SHALL BE APPLIED SHINGLE FASHION PARALLEL TO THE EAVE, LAPPED 2 INCHES, AND FASTENED SUFFICIENTLY TO STAY IN PLACE.

BASE AND CAP FLASHINGS:
BASE AND CAP FLASHING SHALL BE INSTALLED IN ACCORDANCE W/ MFGR'S INSTALLATION INSTRUCTIONS.
BASE FLASHING SHALL BE EITHER CORROSION RESISTANT METAL OF MINIMUM NOMINAL THICKNESS 0.019 INCH OR MINERAL SURFACE ROLL ROOFING WEIGHING A MINIMUM OF 77 LBS PER 100 SQUARE FEET. CAP FLASHING SHALL BE CORROSION RESISTANT METAL OF MINIMUM NOMINAL THICKNESS OF 0.019 INCH.

VALLEYS:
VALLEY LININGS SHALL BE INSTALLED IN ACCORDANCE W/ MANUFACTURER'S INSTALLATION INSTRUCTIONS BEFORE APPLYING ROOFING MATERIAL. VALLEY LININGS OF THE FOLLOWING TYPES SHALL BE PERMITTED.
1. OPEN VALLEYS LINED WITH METAL: THE VALLEY LINING SHALL BE AT LEAST 16" WIDE AND OF ANY OF THE CORROSION RESISTANT METALS IN FBC TABLE 1507.3.9.2.
2. OPEN VALLEYS: VALLEY LINING OF TWO PLIES OF MINERAL SURFACE ROLL ROOFING SHALL BE PERMITTED. THE BOTTOM LAYER SHALL BE 18 INCHES AND THE TOP LAYER A MINIMUM OF 36 INCHES WIDE.
3. CLOSED VALLEYS: VALLEY LINING SHALL BE ONE OF THE FOLLOWING:
   1. BOTH TYPES 1 AND 2 ABOVE, COMBINED.
   2. ONE PLY OF SMOOTH ROLL ROOFING AT LEAST 36 INCHES WIDE AND COMPLYING WITH ASTM D 224.
   3. SPECIALTY UNDERLAYMENT AT LEAST 36 INCHES WIDE & COMPLYING WITH ASTM D 1970.

DECK REQUIREMENTS:
METAL PANELS SHALL BE FASTENED TO MIN. 5/8" X3½" PURLINS ATTACHED TO TRUSSES OR RAFTERS - PURLINS SHALL BE PLACED OVER UNDERLAYMENT ON MINIMUM 7/16" DECK SHEATHING. FASTEN PURLINS TO STRUCTURAL FRAMING W/ 2 - #10 X 2½" PAN HEAD SCRS @ EACH RAFTER OR TRUSS SUPPORT. DECK SHALL BE SECURED AS PER NOTES ON THE ROOF FRAMING PLAN.

SLOPE:
METAL PANELS SHALL BE USED ONLY ON ROOF SLOPES OF 3:12 OR GREATER.

CAULKING:
MUST BE APPROVED BY THE MANUFACTURER, BUTYL SEALANT SUPPLIED IN TAPE OR GUN-GRADE FORM.

METAL PANEL:
METAL PANELS SHALL BE MIN. 29 GAUGE AND COMPLY WITH ASTM A-792 AND D 7-98 EXPOSURE C.

FASTENERS:
FASTENERS FOR METAL PANELS SHALL BE GALVANIZED WOOD FAST SCREW, MIN. OF #8 X 1 1/2" HEX HEAD, PATTERN & SPACING SHALL BE AS PER MANUFACTURER'S SPECIFICATIONS FOR 130 MPH WIND LOADS.

BASE AND CAP FLASHINGS:
BASE AND CAP FLASHING SHALL BE INSTALLED IN ACCORDANCE W/ MFGR'S INSTALLATION INSTRUCTIONS.

SM-RIB METAL ROOFING PANELS
FLORIDA PRODUCT APPROVAL ASSEMBLY NUMBER: 4595.17

THIS FLORIDA PRODUCT APPROVAL ASSEMBLY CALLS FOR 15/32" ROOF SHEATHING WHEN 1X4 WOOD PURLINS ARE PART OF THE STANDARD ASSEMBLY.
THE ROOFING MANUFACTURE'S PRODUCT INFORMATION SHEET INDICATES THAT THE ROOF SHEATHING IS NOT A PART OF THEIR PRODUCT APPROVAL THUS LEAVING OPEN ALTERNATE ROOF SHEATHING DIAPHRAMS. STRUCTURALLY EQUIVELENT ROOF SHEATHING SHALL INCLUDE: 15/32" CDX PLYWOOD, 7/16" OSB OR 1/2" "ZIP-BOARD" WHEN INSTALLED IN ACCORDANCE WITH THE PRODUCT APPROVALS FOR THESE VARIOUS PRODUCTS INDIVIDUALLY.

OPTIONAL METAL ROOFING (Z)

SCALE: NONE

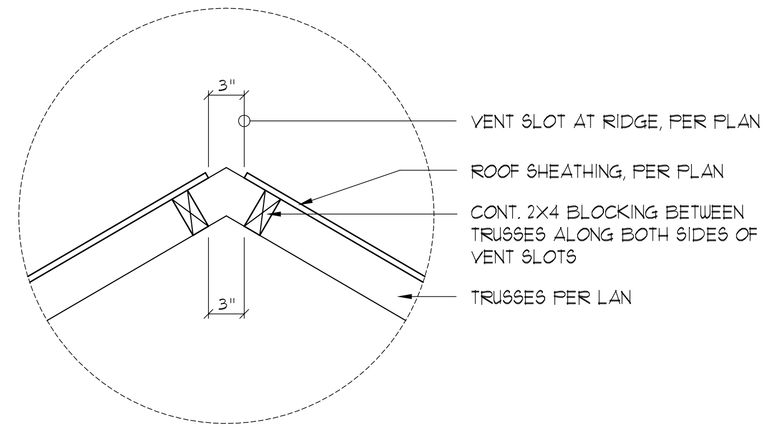

Vent DETAIL (A1)

SCALE: 1" = 1'-0"

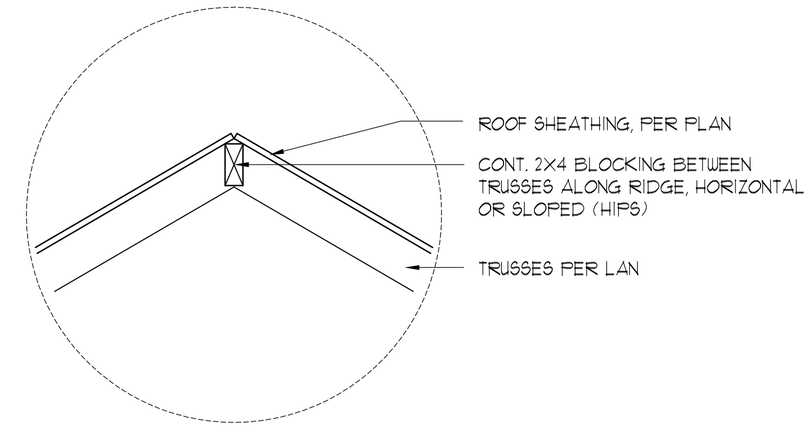

Ridge DETAIL (A2)

SCALE: 1" = 1'-0"

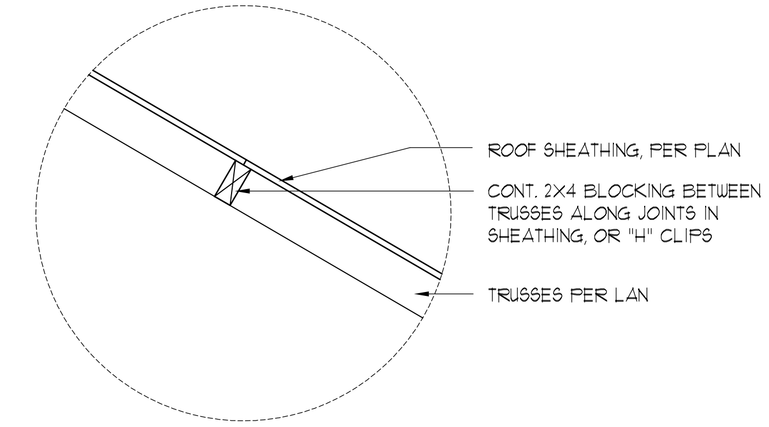

Joint DETAIL (A3)

SCALE: 1" = 1'-0"

ATTENTION ! ! !
TRUSS SHOP DRAWING REQUIREMENTS

THIS PROJECT REQUIRES ENGINEERED TRUSS ROOF FRAMING AND/OR ENGINEERED TRUSS FLOOR FRAMING. BECAUSE OF THIS, PRIOR TO COMMENCEMENT OF CONSTRUCTION, THE OWNER/BUILDER SHALL PROVIDE THE ARCHITECT OF RECORD WITH THE SIGNED AND SEALED TRUSS SHOP DRAWINGS FOR THE AOR'S REVIEW AND COMMENT. THE SUBMISSION SHALL CONSIST OF 3 PAPER COPIES OF THE SIGNED AND SEALED TRUSS SHOP DRAWING, AN ELECTRONIC DXF OR DWG (ACAD VERSION 14 OR LOWER) OF THE PLACEMENT PLAN(S) AND A POSTAGE PAID RETURN MAILER.

FAILURE OF THE OWNER/BUILDER TO PROVIDE THE REQUIRED TRUSS SHOP DRAWING PACKAGE TO THE AOR SHALL RESULT IN THE FULL ASSUMPTION OF RESPONSIBILITY BY THE OWNER/BUILDER FOR ALL MATTERS INVOLVING THE TRUSS FRAMING, INCLUDING, BUT NOT LIMITED TO, THE TRUSS PACKAGE SUITABILITY FOR INCLUSION IN THE PROJECT, PROFILES, BEARING REQUIREMENTS, UPLIFT RESTRAINTS OR ANY OTHER ASPECT OF THE INSTALLATION AND HOW SUCH MAY AFFECT ANY OTHER PORTION OF THE PROJECT, THE STRUCTURAL STABILITY OR THE CONTINUED SUITABILITY OF THE TRUSS COMPONENTS FOR THE DURATION OF THE LIFE OF THE STRUCTURE. USE OF TRUSS DOCUMENTS THAT LACK THE AOR'S "SHOP DRAWING REVIEW" STAMP WILL RESULT IN AOR BEING RELEASED FROM ALL LIABILITY INVOLVING ANY TRUSS COMPONET, FOR ANY REASON.

IF THE 1st SUBMISSION OF THE TRUSS DOCUMENTS FAILS TO MEET THE REQUIREMENTS OF THE DESIGN CONSTRUCTION DOCUMENTS, ADDITIONAL SUBMISSIONS SHALL BE REQUIRED UNTIL SUCH TIME THAT THE TRUSS DOCUMENTS ARE IN CONCURRENCE WITH THE DESIGN CONSTRUCTION DOCUMENTS. EACH SUBSEQUENT SUBMISSION SHALL INCLUDE A POSTAGE PAID MAILER FOR THE RETURN OF THE DOCUMENTS. SUCCESSFUL SUBMISSIONS SHALL BE STAMPED BY THE AOR AND THE DOCUMENTS SHALL BE MARKED AS "NO EXCEPTIONS TAKEN"

FOLLOWING THE REVIEW AND/OR COMMENTS MADE BY THE AOR, 2 SETS OF THE STAMPED TRUSS DOCUMENTS SHALL BE RETURNED TO THE OWNER/BUILDER FOR USE IN THE CONSTRUCTION OF THE PROJECT.

GENERAL TRUSS NOTES:

1. TRUSSES SHALL BE DESIGNED BY A LICENSED ENGINEER, AND IN ACCORDANCE WITH THE REQUIREMENTS OF THE "NATIONAL FOREST PRODUCTS ASSOCIATION" MANUAL FOR "STRESS RATED LUMBER AND IT'S CONNECTIONS", LATEST Ed., ALONG W/ THE "TRUSS PLATE INSTITUTE" SUGGESTED GUIDELINES FOR TEMPORARY AND PERMANENT BRACING, AND HANDLING OF TRUSSES. TRUSS SHOP DRAWINGS SHALL INCLUDE TRUSS DESIGN, PLACEMENT PLANS, DETS, & TRUSS TO TRUSS CONNECTIONS.
2. TRUSS SHOP DRAWINGS SHALL BE SIGNED & SEALED BY THE DESIGNING ENGINEER.
3. FOLLOWING DEVELOPMENT OF TRUSS SHOP DRAWINGS, ADJUSTMENTS TO THE ANCHOR REQUIRMENTS MAY BE REQUIRED DEPENDING ON THE ENGINEERED GRAVITY AND WIND UPLIFT REQUIREMENTS OF TRUSSES OR GIRDERS. THE CONTRACTOR SHALL MAKE AVAILABLE A COMPLETE SET OF TRUSS SHOP DRAWINGS TO THE ARCHITECT FOR THE PURPOSE OF REVIEW OF LOADS IMPOSED ON THE BALANCE OF THE STRUCTURE. ANY SUCH REQUIRED CHANGE SHALL BE INCORPORATED INTO THE CONSTRUCTION OF THIS STRUCTURE.

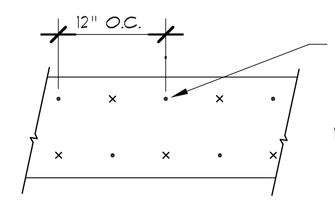

NAIL PLYWOOD FLITCH BEAM TOGETHER W/ 16d NAILS STAGGERED TOP AND BOTTOM, EACH FACE

NOTE:
WHERE BEAM SPAN IS GREATER THAN 8'-0", CENTER 8'-0" LONG PLYWOOD AT CENTER OF BEAM SPAN. BUTT ADJACENT PLYWOOD PIECES TIGHT TO CENTER PIECE. STAGGER JOINTS AT BEAMS WITH MORE THAN ONE PLYWOOD PLATE.

B/U Beam DETAILS (B)

SCALE: NONE

SHOP DWG COORDINATION: THE TRUSS ANCHOR STRAPS AS INDICATED IN THE CONSTRUCTION DOCUMENTS ARE SUGGESTED STRAPS AND THAT THE TRUSS ENGINEERED SHOP DRAWING LOADS TAKE PRECEDENCE OVER THAT INDICATED IN THE CONSTRUCTION DOCUMENTS.
THE UPLIFT LOADS INDICATED FOR EACH TRUSS IN THE ENGINEERED TRUSS SHOP DRAWINGS MAY BE MATCHED TO STANDARD PRODUCT UPLIFT RATINGS FOR COMPARABLE UPLIFT CONNECTORS, AND THAT THE PRODUCTS THAT PROVIDE EQUAL OR GREATER UPLIFT RESISTANCE FOR THE LISTED LOADS MAY BE USED IN LIEU OF THOSE INDICATED IN THE CONSTRUCTION DOCUMENTS OR AS APPROVED BY THE BUILDING OFFICIAL.

THE CONTRACTOR SHALL COORDINATE THE TRUSS TO TRUSS ANCHOR REQUIREMENTS WITH THE TRUSS ENGINEERING SHOP DRAWINGS. SOME OF THE TRUSS TO TRUSS CONNECTIONS WILL REQUIRE ANCHOR STRAPS IN ADDITION TO TYPICAL NAILING. ANCHOR DEVICES SHALL BE REQUIRED FOR ALL JOINTS WITH AN UPLIFT OR GRAVITY LOAD OF 100 LBS OR GREATER.

TRUSSES BEARING ON INTERIOR PARTITIONS WHERE UPLIFT LOADS ARE PRESENT SHALL REQUIRE ANCHORS OF EQUAL OR GREATER LOAD CAPACITY THAN THAT INDICATED BY THE TRUSS SHOP DRAWINGS. THE UPLIFT ANCHOR SYSTEM SHALL BE CONTINUOUS TO THE FOUNDATION.

FRAMING ANCHOR SCHEDULE

PLATE TO CMU WALL	1/2" A.B. W/ 2" SQ. WASHERS @ 48" O.C.
TRUSS TO PLATE:	SIMPSON H2.5a - 2 REQ'D OVER 500 LB UPLIFT
PORCH RAFTER TO BEAM:	SIMPSON H1
PORCH BEAM TO POST:	SIMPSON PC44/EPC44
PORCH BEAM TO CMU.:	SIMPSON HUSC410
PORCH POST TO FND.:	SIMPSON ABU44

NOTE:
ALL ANCHORS SHALL BE SECURED W/ NAILS AS PRESCRIBED BY THE MANUFACTURER FOR MAXIMUM JOINT STRENGTH, UNLESS NOTED OTHERWISE.

NOTE:
REFER TO THE INCLUDED STRUCTURAL DETAILS FOR ADDITIONAL ANCHORS/ JOINT REINFORCEMENT AND FASTENERS.

NOTE:
ALL UNLISTED JOINTS IN THE LOAD PATH SHALL BE REINFORCED WITH SIMPSON A34 FRAMING ANCHORS, TYPICAL T.O.

REVISION:

Copyright 2025 ©
N.P. Geisler, Architect

DRAWN: MPG

CUSTOM RESIDENTIAL DESIGN for:
SVETLANA KHOMICH
COLUMBIA COUNTY, FLORIDA
ALT. METAL ROOFING DET. / ROOF FRAMING DETAILS

Celebrating 53 Years of Service
1972 - 2025
N.P. Geisler, Architect
AR0007005

CUSTOM ARCHITECTURAL DESIGN

NICHOLAS PAUL GEISLER
ARCHITECT
1758 NW Brown Rd.
Lake City, FL 32055
386-365-4355

DATE: 10 MAY 2025
COMM: 2K2518

SHEET: S.7
7 OF 10

Nicholas P Geisler
Digitally signed by Nicholas P Geisler
Date: 2025.06.01 15:10:08 -04'00'

AR0007005