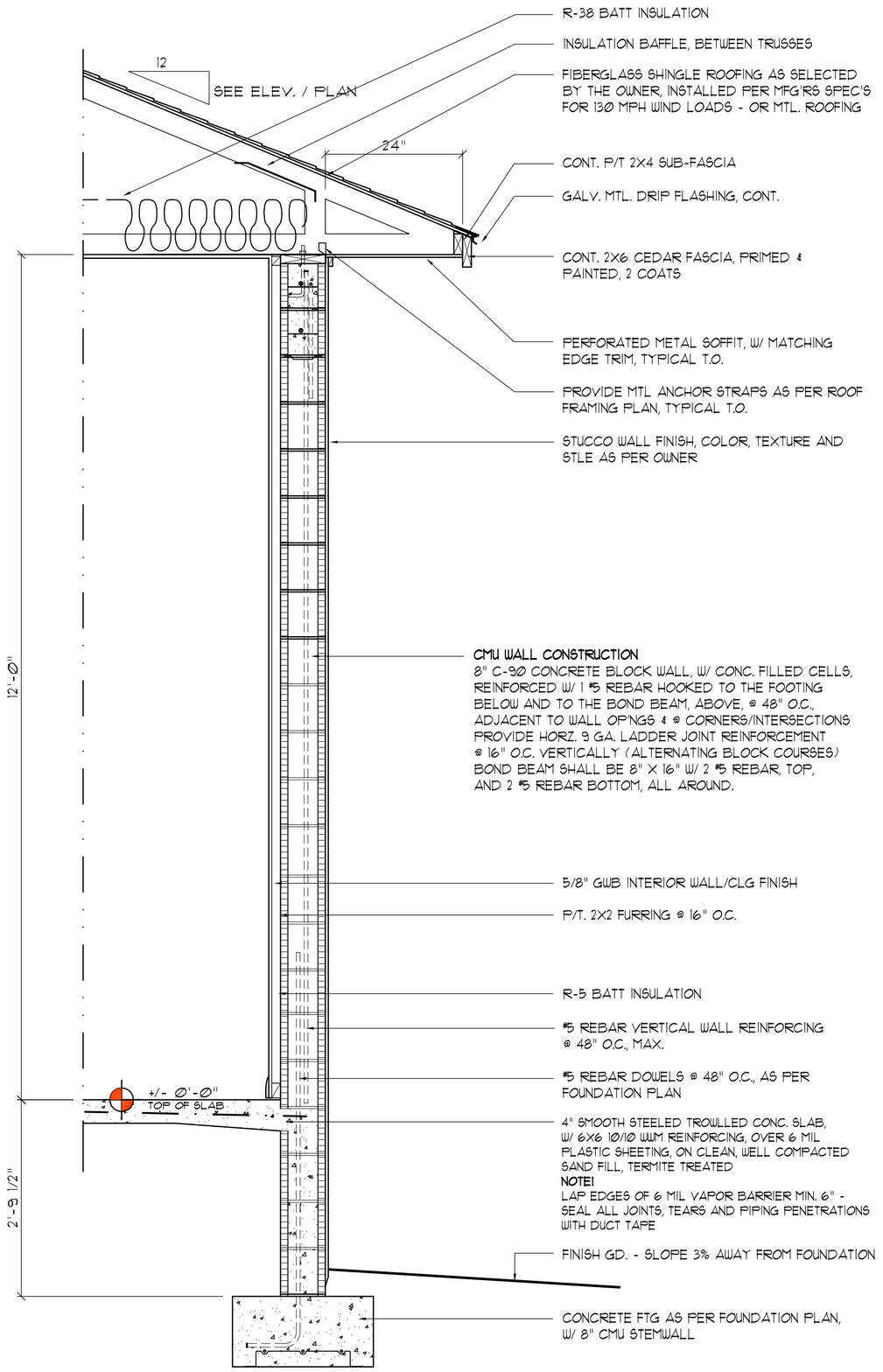

Typical Wall SECTION (A)

SCALE: 3/4" = 1'-0"

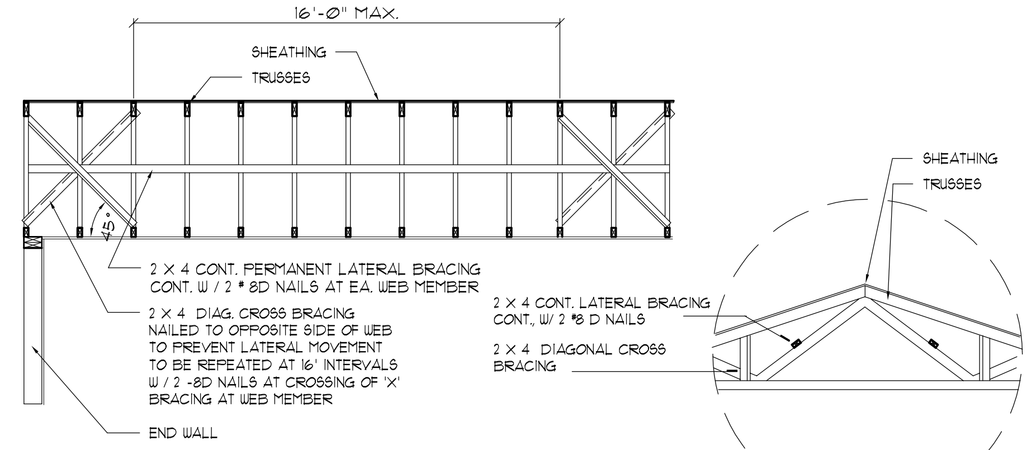

TYP. PERMANENT TRUSS BRACING DIA.

NTS

NOTE: ALL WOOD TO BE NUMBER 2 GRADE SOUTHERN YELLOW PINE

Truss Bracing DETAILS (B)

SCALE: AS NOTED

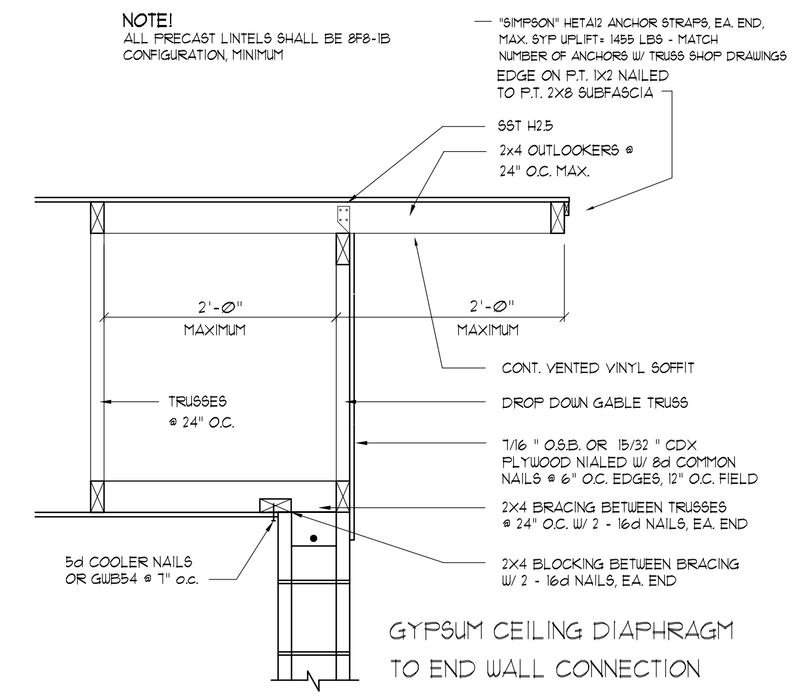

Gable End DETAIL (C)

SCALE: NONE

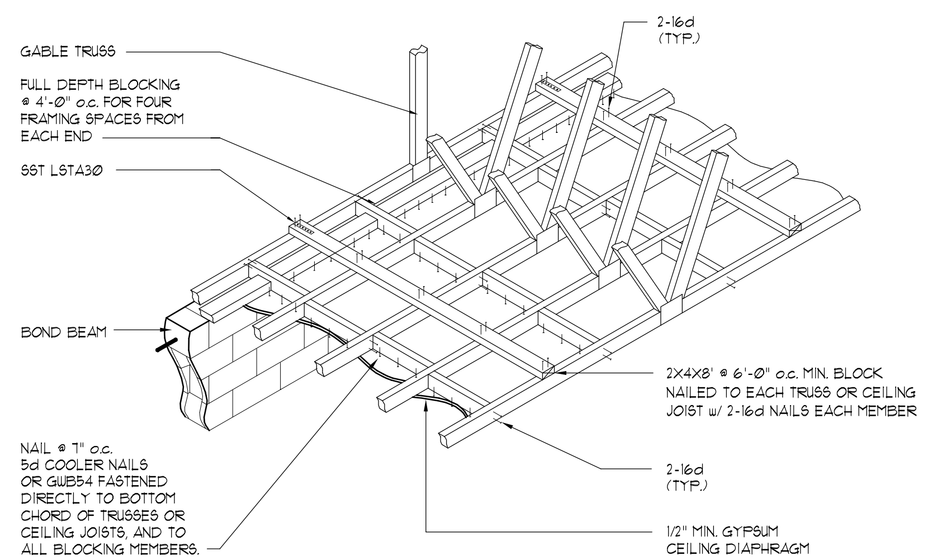

DIRECT TRUSS TO MASONRY CONNECTION ENDWALL FOR GYPSUM CEILING DIAPHRAGM (D)

SCALE: NONE

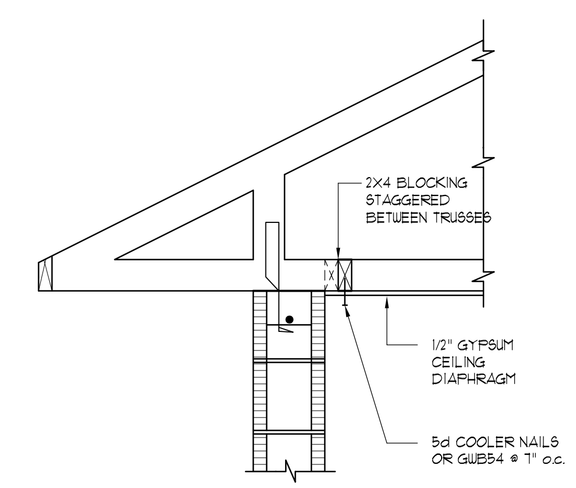

Roof Edge DETAIL (E)

SCALE: NONE

ANCHOR REPAIRS (IF NEEDED)

BROKEN OR MISSING FOUNDATION DOWEL:

DRILL ¾"ø HOLE TO MIN. 8" DEPTH, CLEAN HOLE W/ COMPRESSED AIR, FILL HOLE 1/2 TO 2/3rds FULL W/ CONSTRUCTION EPOXY, STARTING FROM BOTTOM OF HOLE TO PREVENT AIR POCKETS, DOWEL MUST BE CLEAN AND OIL FREE, PLACE DOWEL BY INSERTING AND SLOWING TURNING UNTIL THE DOWEL CONTACTS THE BOTTOM OF THE HOLE AT FOOTING ALLOW 24 HOUR CURE TIME. USE ONLY HIG STRENGTH EPOXY, SUCH AS "HILTI" HY-150, OR EQUAL.

BROKEN OR MISSING TRUSS ANCHOR:

INSTALL "SIMPSON" HM9 ANCHOR TO INSIDE FACE OF CMU BOND BEAM W/ 5 - ¼"ø X 2¼" "TITEN 2" SCREWS AND 4 - "SDS" ¼" X 1½" SCREWS TO RAFTER/TRUSS UPLIFT CAPASITY: 805 LBS

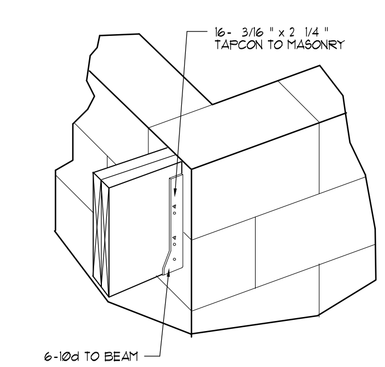

"Simpson" HUSC410 (G)

SCALE: NONE
WOOD BEAM TO MASONRY

REVISION:

Copyright 2025 ©
N.P. Geisler, Architect

DRAWN: MPG

CUSTOM RESIDENTIAL DESIGN for:
SVETLANA KHOMICH
COLUMBIA COUNTY, FLORIDA
WALL SECTION / ROOF FRAMING DETAILS

Celebrating 53 Years of Service
1972 - 2025
N.P. Geisler, Architect
AR0007005
CUSTOM ARCHITECTURAL DESIGN
NICHOLAS PAUL GEISLER
ARCHITECT
1758 NW Brown Rd.
Lake City, FL 32055
386-365-4355

DATE: 10 MAY 2025

COMM: 2K2518

SHEET: S.8

8 OF 10

Nicholas P Geisler
Digitally signed by Nicholas P Geisler
Date: 2025.06.01 15:10:47 -04'00'
AR0007005