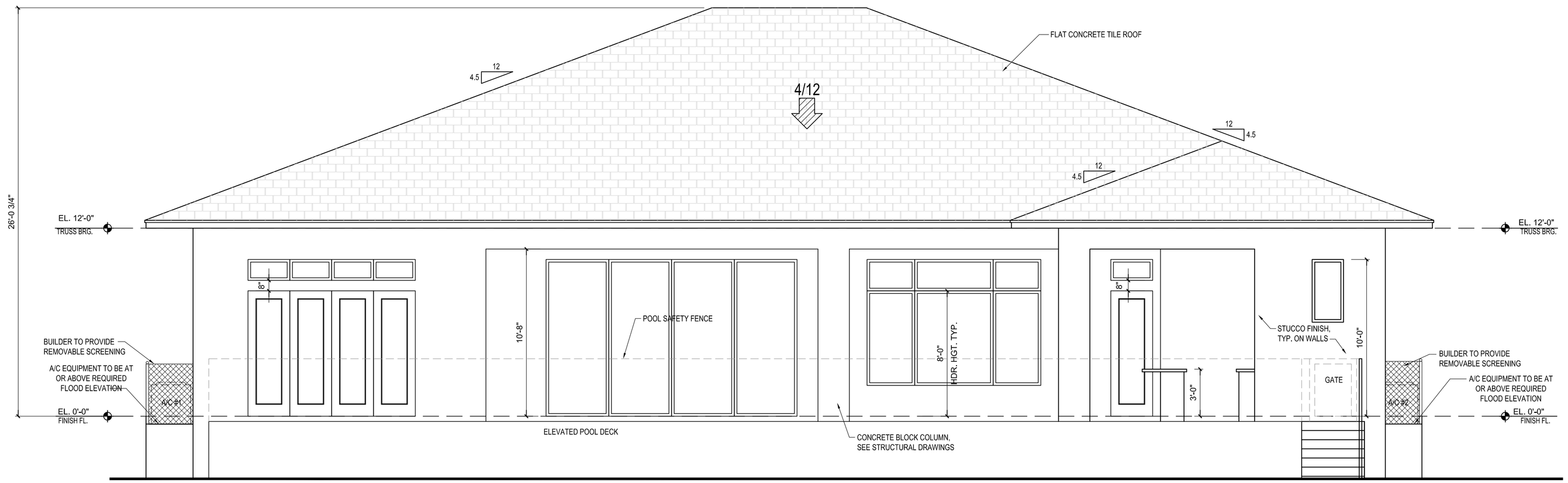

REAR ELEVATION

SCALE: 1/4" = 1'-0"

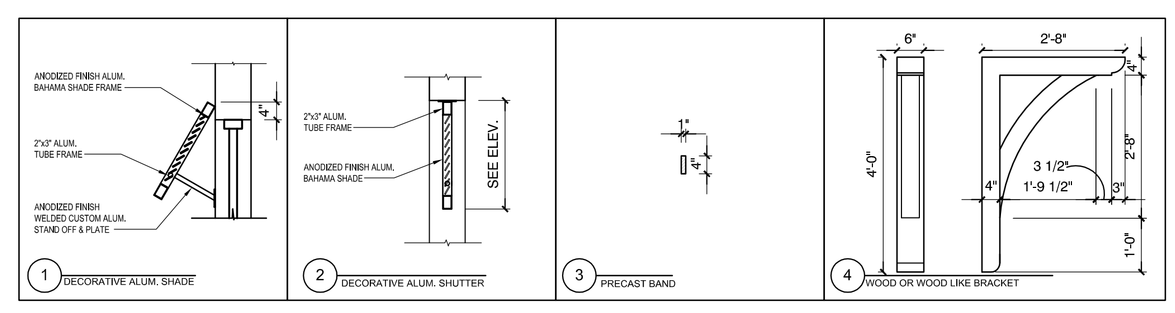

DETAILS

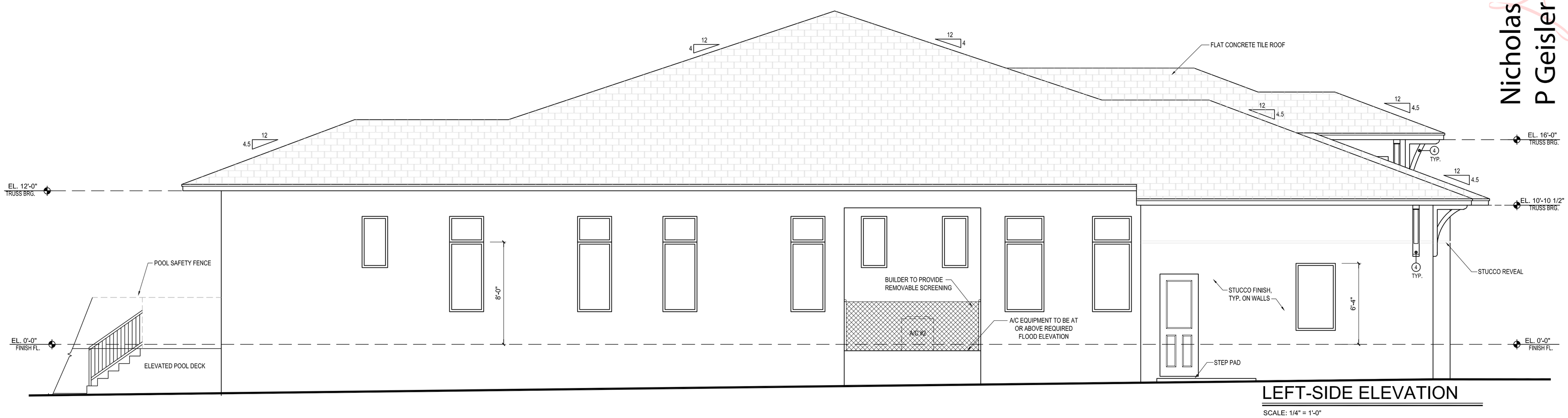

LEFT-SIDE ELEVATION

SCALE: 1/4" = 1'-0"

SFD
South Florida Design, Inc.
8899 Timberwilde Dr.
Suite 2
Bonita Springs, FL 34135
(239)-431-1818

All construction shall be in accordance with the 2023 FBC Residential, 8th Edition and applicable local jurisdiction amendments. Written dimensions on these drawings have precedence over scale dimensions. Contractors shall verify and be responsible for all dimensions and conditions of the job. SFD shall be notified in writing of any variations or discrepancies from the dimensions, conditions and specifications shown by these drawings.

NOTE:
ALL STRUCTURAL INFORMATION PROVIDED IN STRUCTURAL DRAWINGS BY ENGINEER OR ARCHITECT TAKE PRECEDENCE OVER ANY STRUCTURAL INFORMATION PROVIDED IN THIS PLAN.

PLAN REPRODUCTION AND LICENSING NOTICE
The printing or reproduction of any land for marketing, construction or any use of this plan without explicit consent or written and signed license agreement from the copyright owner South Florida Design, Inc. The license number listed below grants the customer the right to construct one home from these plans at the specified legal description or address as stated in the license agreement. Any use of this plan or design without a valid license number will result in legal action as well as fines and penalties.

LICENSE # SFD-00825-1G1-4346

G1-4346-S
HARRISON MODEL
SINGLE FAMILY HOME
181 NE FROGS GLEN
LAKE CITY, FLORIDA 32055

Nicholas P Geisler
Digitally signed by Nicholas P Geisler
Date: 2025.06.01 15:01:04 -04'00'

Revisions			
No.	Date	No.	Date
1		4	
2		5	
3		6	

Drawn By:	D.A.
Plan No:	G1-4346-S
Date:	09-05-2024
Reviewed:	03-06-23 KP

CONFIDENTIAL, COPYRIGHT SOUTH FLORIDA DESIGN, INC.

PURSUANT TO SECTION 102 OF THE COPYRIGHT ACT, 17 U.S.C., ALL CONCEPTS, IDEAS, DESIGNS, ARRANGEMENTS, DRAWINGS, AND PLANS INDICATED OR REPRESENTED BY THIS DOCUMENT ARE COPYRIGHTED BY SOUTH FLORIDA DESIGN, INC. AS SUCH ALL CONCEPTS, IDEAS, DESIGNS, ARRANGEMENTS, DRAWINGS, AND PLANS INDICATED OR REPRESENTED BY THIS DOCUMENT ARE OWNED BY AND THE PROPERTY OF SOUTH FLORIDA DESIGN, INC AND WERE CREATED, EVOLVED AND DEVELOPED FOR ITS OWN USE. NONE OF THE IDEAS, DESIGNS, ARRANGEMENTS, OR PLANS SHALL BE USED BY OR DISCLOSED TO ANY PERSON, ARCHITECTURAL OR ENGINEERING FIRM, CONSTRUCTION FIRM, SUBCONTRACTING FIRM, SUPPLIER, OR CORPORATION FOR ANY PURPOSE WHATSOEVER WITHOUT THE WRITTEN PERMISSION OF SOUTH FLORIDA DESIGN, INC. PURSUANT TO SECTION 102 OF THE COPYRIGHT ACT, 17 U.S.C., PROTECTION FOR AN ARCHITECTURAL WORK CREATED AS A WORK MADE FOR HIRE ON OR AFTER DECEMBER 1, 1990, LASTS FOR 95 YEARS FROM THE DATE OF PUBLICATION OF THE WORK OR FOR 120 YEARS FROM THE DATE OF ARCHITECT'S ENGAGEMENT, WHICHEVER EXPIRES FIRST. UNLESS SHARING, REPRODUCTION HEREOF IS A CRIMINAL OFFENSE UNDER SECTION 102 OF THE COPYRIGHT ACT, 17 U.S.C., 18 U.S.C. SEC. 506. UNAUTHORIZED DISCLOSURE MAY CONSTITUTE TRADE SECRET MISAPPROPRIATION IN VIOLATION OF I.C.24-3-31-1 ET. SEQ. AND OTHER LAWS. THE CONCEPTS, IDEAS, DESIGNS, ARRANGEMENTS, DRAWINGS, AND PLANS DISCLOSED ARE COPYRIGHTED AND HEREIN MAY BE PATENTED OR BE THE SUBJECT OF PENDING PATENT APPLICATION. ANYONE VIOLATING THE INTENT OF THIS COPYRIGHT PROTECTION WILL BE PROSECUTED TO THE FULL EXTENT OF THE FEDERAL STATE AND LOCAL LAWS.

WRITTEN DIMENSIONS ON THESE DOCUMENTS SHALL HAVE PRECEDENCE OVER SCALE DIMENSIONS. CONTRACTORS SHALL VERIFY AND BE RESPONSIBLE FOR ALL DIMENSIONS AND CONDITIONS ON THE JOB AND THIS OFFICE MUST BE NOTIFIED OF ANY VARIATION FROM THE DIMENSIONS AND CONDITIONS SHOWN BY THESE DRAWINGS. SHOP DRAWINGS AND OR DETAILS MUST BE SUBMITTED TO THIS OFFICE FOR REVIEW BEFORE PROCEEDING WITH FABRICATION.

SHEET
A-7
PERMIT SET