Design No. U301

Bearing Wall Rating-2 Hr.
Finish Rating-66 Min.

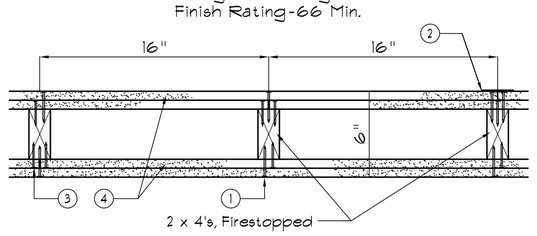

2 x 4's, Firestopped

1. Nailheads - Exposad or covered with joint finisher.

2. Joints - Exposed or covered with fiber tape and joint finisher. As an alternate, nominal 3/32 in. thick gypsum veneer plaster may be applied to the entire surface of Classified veneer baseboard. Joints reinforced.

3. Nails - 6d cement-coated nails 1-7/8 in. long, 0.0915 in. shank diam, 1/4 in. diam. heads, and 8d cement-coated nails 2-3/8 in. long, 0.113 in. shank diam, 9/32 in. diam. heads.

4. Wallboard, Gypsum* - 5/8 in. thick, two layers applied either horizontally or vertically. Inner layer attached to studs with the 1-7/8 in. nails spaced 6 in. O.C. Outer layer attached to studs over inner layer with the 2-3/8 in. long nails spaced 8 in. O.C. Vertical joints located over studs. All joints in face layers staggered with joints in base layers. Joints of each base layer offset with joints of base layer on opposite side.

Canadian Gypsum Co., Ltd. - Types C, SCX, SHX, WRX.
Celotex Corp. - Type I or FAP.
Domtar Gypsum - Type C, 4 or 9.
Gold Bond Building Products - Types FSK, FSK-G, -4, FSW, FSW-G, or -4.
James Hardie Gypsum - Type Fire X.
Pabco Gypsum, A Div. of Pacific Coast Bldg. Products, Inc. - Types PG-2, -3, -3W, -3WB, -4 or -6.
Standard Gypsum Corp. - Type SGC or SGC-G.
United States Gypsum Co. - Type C, IP-X1, IP-X2, SCX, SHC, SHX, WRX-C, or WRX.

*Bearing the UL Classification Marking

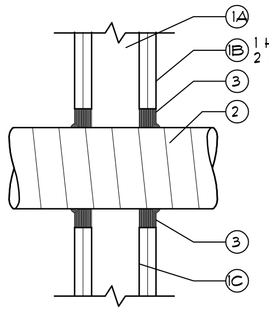

1 HOUR / 1 LAYER GWB
2 HOUR / 2 LAYERS GWB

3M FIRE PROTECTION PRODUCTS THIS MATERIAL WAS EXTRACTED BY
3M FIRE PROTECTION PRODUCTS
FROM THE 1991 EDITION OF THE UL FIRE RESISTANCE DIRECTORY.
345 METALLIC PIPE 1000 SERIES

UL SYSTEM NO. W-L-1017 (FORMERLY SYSTEM NO. 328) F RATINGS-1 AND 2 HR. (SEE ITEM 3) T RATING-0 HR L RATING AT AMBIENT-LESS THAN 1 CFM/SQ FT L RATING AT 400 F-LESS THAN 1 CFM/SQ FT.LL

1. WALL ASSEMBLY- THE 1 HR FIRE RATED GYPSUM WALLBOARD/STUD WALL ASSEMBLY SHALL BE CONSTRUCTED OF THE MATERIALS AND IN THE MANNER DESCRIBED IN THE INDIVIDUAL U300 OR U400 SERIES WALL OR PARTITION DESIGNS IN THE UL FIRE RESISTANCE DIRECTORY AND SHALL INCLUDE THE FOLLOWING CONSTRUCTION FEATURES:

A. STUDS- WALL FRAMING - WOOD STUDS TO BE MIN 3-1/2 IN. WIDE BY 1-1/2 IN. DEEP , SOLID LUMBER, SPACED MAX 16 IN. OC.

B. WALLBOARD, GYPSUM*- NOM 5/8 IN. THICK, 4 FT. WIDE WITH SQUARE OR TAPERED EDGES. THE GYPSUM WALLBOARD TYPE, NUMBER OF LAYERS AND SHEET ORIENTATION SHALL BE AS SPECIFIED IN THE INDIVIDUAL WALL AND PARTITION DESIGN. DIAM OF CIRCULAR THROUGH OPENING CUT THROUGH GYPSUM WALLBOARD ON EACH SIDE OF WALL ASSEMBLY TO BE MIN 0 IN. (POINT CONTACT) TO MAX 1 IN. LARGER THAN OUTSIDE DIAM OF FLEXIBLE METAL CONDUIT (ITEM 2) INSTALLED IN THROUGH OPENING. SIDE EDGE OF CIRCULAR OPENING TO BE MIN 3 IN. FROM NEAREST STUD IN WALL CAVITY.

C. FASTENERS- WHEN STEEL CHANNEL STUD FRAMING IS EMPLOYED, GYPSUM WALLBOARD ATTACHED TO STUDS WITH TYPE S SELF-DRILLING, SELF-TAPPING BUGLE-HEAD STEEL SCREWS AS SPECIFIED IN THE INDIVIDUAL WALL OR PARTITION DESIGN.

2. THROUGH PENETRATING PRODUCT- FLEXIBLE METAL CONDUIT-NOM 4 IN. DIAM (OR SMALLER) ALUMINUM OR STEEL. FLEXIBLE METAL CONDUIT, MAX ONE FLEXIBLE METAL CONDUIT TO BE INSTALLED NEAR CENTER OF CIRCULAR OPENING IN GYPSUM WALLBOARD. FLEXIBLE METAL CONDUIT TO BE RIGIDLY SUPPORTED ON BOTH SIDES OF WALL ASSEMBLY. AFC CABLE SYSTEMS, INC.

3. FILL, VOID OR CAVITY MATERIAL- CAULK-CAULK FILL MATERIAL FORCED INTO ANNULAR SPACE AROUND ENTIRE CIRCUMFERENCE OF THROUGH PENETRATING PRODUCT TO COMPLETELY FILL OPENING IN GYPSUM WALLBOARD LAYERS ON EACH SIDE OF THE WALL ASSEMBLY. A MIN 5/8 IN. THICKNESS OF CAULK IS REQUIRED FOR THE 1 HR FIRE RATING. A MIN 1-1/4 IN.

MINNESOTA MINING & MFG. CO. - CP 25WB+
+BEARING THE UL CLASSIFICATION MARKING

UL SYSTEM NO. WL-1017
1-HOUR WALL PENETRATION

Design No. P522

Unrestrained Assembly Rating-1 Hr.
Finish Rating- 22 min.

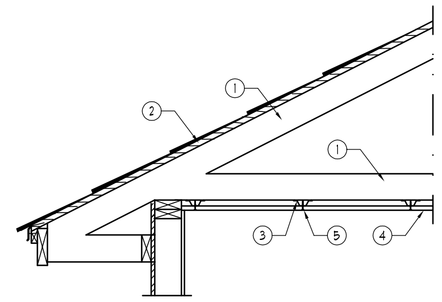

1. Roof Sheathing - 4 ft by 8 ft by 15/32 in. thick CDX plywood. Plywood installed perpendicular to trusses with end joints staggered 4 ft. Plywood secured to trusses with fasteners as specified on the construction drawings.

2. Trusses - Parallel chord trusses spaced a max 24 in. O.C. fabricated from nom 2 by 4 in. lumber with lumber orientated either vertically or horizontally. Truss members secured together with No. 20 MSG galv steel truss plates. Plates include 5/16 in. long teeth projecting perpendicular to the plane of the plate. The teeth are in pairs facing each other made from the same punch creating a split tooth type plate. Each tooth has a chisel point on its outside edge, with these points being diagonally opposite from each other for each pair. The top half of each tooth has a twist for stiffness. The pairs are repeated on approx 7/8 in. centers with four rows of teeth per in. of plate width.

3. Furring Channels - Formed of No. 25 MSG galv steel spaced 24 in. O.C. perpendicular to trusses. Channels secured to trusses with double strand of No. 18 SWG galv steel wire spaced 48 in. O.C. Channels spliced with adjacent pieces overlapped 6 in. and tied with double strand of No. 18 SWG galv steel wire at each end of overlap.

3A. Resilient Channel - (Not shown) - As an alternate to Item 3 - Formed from No. 26 MSG galv steel, spaced 16 in. O.C. perpendicular to trusses. Channels secured to trusses with Type S, 1-1/4 in. long steel screws spaced 24 in. O.C. Channels overlapped at splice 4 in.

4. Wallboard, Gypsum* - 5/8 in. thick, 4 ft wide. Sheets of wallboard installed with long dimension perpendicular to furring or resilient channels with 1 in. long wallboard screws spaced 12 in. O.C. and located a min 1-1/2 in. from side and end joints. At end joints, two furring or resilient channels are used which extend a min of 6 in. beyond end of joint.
Canadian Gypsum Co., Ltd.-Type C.
Celotex Corp.-Type FRP.
Domtar Gypsum-Type 5
Georgia-Pacific Corp. Gypsum Div.-Type GPFS-C.
Gold Bond Building Products-Type FSW-G.
United States Gypsum Co.-Types C, FCC, or IP-X2.

5 Screw, Wallboard -1 in long, Type S, 9/64 in. diam. self-drilling and self-tapping. Bugle head.

6. Finishing System - (Not shown) - Paper tape embedded in cementitious compound over joints with edges of compound feathered out and exposed screw heads covered with compound. As an alternate, nom 3/32 in. thick veneer plaster may be applied to the entire surface of gypsum wallboard.

*Bearing the UL Classification Marking

These drawings, as instruments of service, are the sole property of the architect, and may not be used, copied or reproduced in whole or in part for use on or incorporated within any other job without specific and individual authorization by the architect.

GENERAL NOTES:

1. THE CONTRACTOR SHALL INDEMNIFY THE OWNER AGAINST ALL CLAIMS, WHETHER FROM PERSONAL INJURY OR PROPERTY DAMAGE, ARISING FROM EVENTS ASSOCIATED WITH THE WORK PERFORMED UNDER THE CONTRACT FOR THIS PROJECT.

2. THE CONTRACTOR AND/OR SUB-CONTRACTORS SHALL WARRANT ALL WORK FOR A PERIOD OF ONE YEAR FOLLOWING THE DATE OF FINAL COMPLETION AND ACCEPTANCE BY THE OWNER. DEFECTS IN MATERIALS, EQUIPMENT, COMPONENTS AND WORKMANSHIP SHALL BE CORRECTED AT NO FURTHER COST TO THE OWNER DURING THE ONE YEAR WARRANTY PERIOD.

3. AT THE OWNER'S OPTION, A WARRANTY INSPECTION SHALL BE PERFORMED DURING THE ELEVENTH MONTH FOLLOWING THE COMMENCEMENT OF THE WARRANTY PERIOD, FOR THE PURPOSE OF DETERMINING ANY WARRANTY WORK THAT MAY BE REQUIRED. THE CONTRACTOR SHALL BE PRESENT DURING THIS INSPECTION IF REQUESTED BY THE OWNER.

4. THE CONTRACTOR SHALL PAY FOR ALL PERMITS, LICENSES, TESTS AND THE LIKE THAT MAY BE REQUIRED BY THE VARIOUS AUTHORITIES HAVING JURISDICTION OVER THIS PROJECT BE THEY CITY, COUNTY, STATE OR FEDERAL.

5. THE OWNER SHALL FILE A "NOTICE OF COMMENCEMENT" PRIOR TO THE BEGINNING THE THE PROJECT AND THE CONTRACTOR(S) SHALL FILE "NOTICE TO OWNER" AND PROVIDE "RELEASE OF LIEN" FOR ALL PAYMENT REQUESTS PRIOR TO DISBURSEMENT OF ANY FUNDS.

6. ANY AND ALL DISPUTES ARISING FROM EVENTS ASSOCIATED WITH THE CONSTRUCTION OF THIS PROJECT BETWEEN THE OWNER, CONTRACTOR(S) AND SUPPLIERS SHALL BE RESOLVED THROUGH BINDING ARBITRATION.

7. ALL WORK SHALL BE IN ACCORDANCE W/ APPLICABLE CODES AND LOCAL REGULATIONS, INCLUDING APPLICABLE ENERGY CODES. ALL COMPONENTS OF THE BUILDING SHALL MEET WITH THE MINIMUM ENERGY REQUIREMENTS OF THE BUILDING CODE. ANY DISCREPANCIES SHALL BE REPORTED TO THE ARCHITECT IN WRITING PRIOR TO THE COMMENCEMENT OF THE WORK.

8. ALL INSULATION SHALL BE LEFT EXPOSED AND ALL LABLES LEFT INTACT ON THE WINDOWS AND DOORS UNTIL INSPECTED BY THE BUILDING OFFICIAL.

9. ALL WOOD IN CONTACT WITH CONCRETE OR MASONRY SHALL BE PRESSURE TREATED.

10. INTERIOR BEARING WALLS SHALL BE CONSTRUCTED IN COMPLIANCE WITH "UL Design U333", BATT INSULATION SHALL BE INCLUDED WHERE UNCONDITIONED AREA IS BEING SEPARATED FROM HEATED / COOLED AREA.

11. INTERIOR STUD WALLS SEPARATING LIVING AREA FROM GARAGE AREAS SHALL BE CONSTRUCTED IN COMPLIANCE WITH "UL Design U333", INCLUDING R-11 BATT INSULATION.

12. CEILINGS OVER ATTACHED GARAGES OR GARAGES W/ LIVING AREA ABOVE SHALL BE 5/8" FIRECODE "C" GWB ON 1X3 WOOD FURRING AT 16" O.C., ATTACHED W/ 1 1/4" BUGLEHEAD SCREWS @ 6" O.C. ALONG EACH POINT OF BEARING.

TERMITE PROTECTION NOTES:

SOIL CHEMICAL BARRIER METHOD:

1. A PERMANENT SIGN WHICH IDENTIFIES THE TERMITE TREATMENT PROVIDER AND NEED FOR REINSPECTION AND TREATMENT CONTRACT RENEWAL SHALL BE PROVIDED. THE SIGN SHALL BE POSTED NEAR THE WATER HEATER OR ELECTRIC PANEL. FBC 1042.6

2. CONDENSATE AND ROOF DOWNSPOUTS SHALL DISCHARGE AT LEAST 1'-0" AWAY FROM BUILDING SIDE WALLS. FBC 1503.4.4

3. IRRIGATION/SPRINKLER SYSTEMS INCLUDING ALL RISERS AND SPRAY HEADS SHALL NOT BE INSTALLED WITHIN 1'-0" FROM BUILDING SIDE WALLS. FBC 1503.4.4

4. TO PROVIDE FOR INSPECTION FOR TERMITE INFESTATION, BETWEEN WALL COVERINGS AND FINAL EARTH GRADE SHALL NOT BE LESS THAN 6".
EXCEPTION: PAINT AND DECORATIVE CEMENTIOUS FINISH LESS THAN 5/8" THICK ADHERED DIRECTLY TO THE FOUNDATION WALL. FBC 1403.1.6

5. INITIAL TREATMENT SHALL BE DONE AFTER ALL EXCAVATION AND BACKFILL IS COMPLETE. FBC 1816.1.1

6. SOIL DISTURBED AFTER THE INITIAL TREATMENT SHALL BE RETREATED INCLUDING SPACES BOXED OR FORMED. FBC 1816.1.2

7. BOXED AREAS IN CONCRETE FLOOR FOR SUBSEQUENT INSTALLATION OF TRAPS, ETC. SHALL BE MADE WITH PERMANENT METAL OR PLASTIC FORMS. PERMANENT FORMS MUST BE OF A SIZE AND DEPTH THAT WILL ELIMINATE THE DISTURBANCE OF SOIL AFTER THE INITIAL TREATMENT. FBC 1816.1.3

8. MINIMUM 6 MIL VAPOR RETARDER MUST BE INSTALLED TO PROTECT AGAINST RAINFALL DILUTION. IF RAINFALL OCCURS BEFORE VAPOR RETARDER PLACEMENT, RETREATMENT IS REQUIRED. FBC 1816.1.4

9. CONCRETE OVERPOUR AND MORTAR ALONG THE FOUNDATION PERIMETER MUST BE REMOVED BEFORE EXTERIOR SOIL TREATMENT. FBC 1816.1.5

10. SOIL TREATMENT MUST BE APPLIED UNDER ALL EXTERIOR CONCRETE OR GRADE WITHIN 1'-0" OF THE STRUCTURE SIDEWALLS. FBC 1816.1.6

11. AN EXTERIOR VERTICAL CHEMICAL BARRIER MUST BE INSTALLED AFTER CONSTRUCTION IS COMPLETE INCLUDING LANDSCAPING AND IRRIGATION. ANY SOIL DISTURBED AFTER THE VERTICAL BARRIER IS APPLIED, SHALL BE RETREATED. FBC 1816.1.6

12. ALL BUILDINGS ARE REQUIRED TO HAVE PER-CONSTRUCTION TREATMENT. FBC 1816.1.7

13. A CERTIFICATE OF COMPLIANCE MUST BE ISSUED TO THE BUILDING DEPARTMENT BY *LICENSED PEST CONTROL COMPANY BEFORE A CERTIFICATE OF OCCUPANCY WILL BE ISSUED. THE CERTIFICATE OF COMPLIANCE SHALL STATE: "THE BUILDING HAS RECEIVED A COMPLETE TREATMENT FOR THE PREVENTION OF SUBTERRANEAN TERMITES. THE TREATMENT IS IN ACCORDANCE WITH THE RULES AND LAWS OF THE FLORIDA DEPARTMENT OF AGRICULTURE AND CONSUMER SERVICES". FBC 1816.1.7

14. AFTER ALL WORK IS COMPLETED, LOOSE WOOD AND FILL MUST BE REMOVED FROM BELOW AND WITHIN 1'-0" OF THE BUILDING. THIS INCLUDES ALL GRADE STAKES, TUB TRAP BOXES, FORMS, SHORING OR OTHER CELLULOSE CONTAINING MATERIAL. FBC 2303.1.3

15. NO WOOD, VEGETATION, STUMPS, CARDBOARD, TRASH, ETC. SHALL BE BURIED WITHIN 15'-0" OF ANY BUILDING OR PROPOSED BUILDING. FBC 2303.1.4

FLORIDA BUILDING CODE

Compliance Summary

TYPE OF CONSTRUCTION

Roof: Gable Construction, Wood Trusses @ 24" O.C.
Walls: 2x4 Wood Studs @ 16" O.C.
Floor: 4" Thk. Concrete Slab W/ Fibermesh Concrete Additive
Foundation: Continuous Stemwall Footer

ROOF DECKING

Material: 1/2" CD Plywood or 7/16" OSB.
Sheet Size: 48"x96" Sheets Perpendicular to Roof Framing
Fasteners: 8d Ring Shank Nails per schedule on sheet A.1

SHEARWALLS

Material: 7/16" OSB. "WindSTORM": 48" X 97", 109", 121" OR 145"
Sheet Size: 48"x97" (109", 121" OR 145") Sheets Placed Vertical
Fasteners: 8d Ring Shank Nails @ 4" O.C. Edges & 8" O.C. Interior
Dragstrut: Double Top Plate (S.Y.P.) W/2 - 16d Nails @ 12" O.C.
Wall Studs: 2x4 SPF Studs @ 16" O.C.

HURRICANE UPLIFT CONNECTORS

Truss Anchors: Simpson H2.5a @ Ea. Truss End (Typ. U.O.N.)
Wall Tension: Wall Sheathing Nailing is Adequate - 8d @ 4" O.C. Top & Bot.
Anchor Bolts: 1/2" A307 @ 48" O.C. - 1st Bolt 8" from corner
Corner Hold-down Device: Simpson HD2a, ea. corner

FOOTINGS AND FOUNDATIONS

Footing: 20"X12" Cont. W/2-#5 Cont. & wire chairs @ 48" O.C.

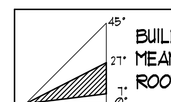

BUILDING COMPONENTS & CLADDING LOADS
MEAN BUILDING HEIGHT = 30.0', EXPOSURE "B"
ROOF ANGLE 1° TO 27°

	ZONE	AREA	Vult 110 MPH	Vult 120 MPH	Vult 130 MPH	Vult 140 MPH
ROOF 1° TO 27°	1	10	12.0 / -19.9	14.9 / -23.7	17.5 / -27.8	20.3 / -32.3
	1	20	11.4 / -19.4	13.6 / -23.0	16.0 / -27.0	18.5 / -31.4
	1	50	10.0 / -18.6	11.9 / -22.2	13.9 / -26.0	16.1 / -30.2
	2	10	12.5 / -34.7	14.9 / -41.3	17.5 / -48.4	20.3 / -56.2
	2	20	11.4 / -31.9	13.6 / -38.0	16.0 / -44.6	18.5 / -51.7
	2	50	10.0 / -28.2	11.9 / -33.6	13.9 / -39.4	16.1 / -45.7
	3	10	12.5 / -51.3	14.9 / -61.0	17.5 / -71.6	20.3 / -83.1
	3	20	11.4 / -47.9	13.6 / -57.1	16.0 / -67.0	18.5 / -77.7
	3	50	10.0 / -43.5	11.9 / -51.8	13.9 / -60.8	16.1 / -70.5
WALL	4	10	21.8 / -23.6	25.9 / -34.7	30.4 / -33.0	35.3 / -38.2
	4	20	20.8 / -22.6	24.7 / -26.9	29.0 / -31.6	33.7 / -36.7
	4	50	19.5 / -21.3	23.2 / -25.4	27.2 / -29.8	31.6 / -34.6
	5	10	21.8 / -29.1	25.9 / -34.7	30.4 / -40.7	35.3 / -47.2
	5	20	20.8 / -27.2	24.7 / -32.4	29.0 / -38.0	33.7 / -44.0
	5	50	19.5 / -24.6	23.2 / -29.3	27.2 / -34.3	31.6 / -39.8

HEIGHT & EXPOSURE ADJUSTMENT COEFFICIENTS FOR BUILDING COMPONENTS & CLADDING

BLDG HEIGHT	EXPOSURE "B"	EXPOSURE "C"	EXPOSURE "D"
15	0.82	1.21	1.47
20	0.89	1.29	1.55
25	0.94	1.35	1.61
30	1.00	1.40	1.66

STRUCTURAL DESIGN CRITERIA:

1. THE DESIGN COMPLIES WITH THE REQUIREMENTS OF THE 2023 FLORIDA BUILDING CODE - SECTION 1609 AND OTHER REFERENCED CODES AND SPECIFICATIONS. ALL CODES AND SPECIFICATIONS SHALL BE LATEST EDITION AT TIME OF PERMIT.

2. WIND LOAD CRITERIA: RISK CATAGORY: 2, EXPOSURE: "B"

BASED ON ANSI/ASCE 7-22. 2023 FBC 1609-A WIND VELOCITY: V_{ULT} = 130 MPH
V_{ASD} = 101 MPH

3. ROOF DESIGN LOADS:
SUPERIMPOSED DEAD LOADS: . . . . . 20 PSF
SUPERIMPOSED LIVE LOADS: . . . . . 20 PSF

4. FLOOR DESIGN LOADS:
SUPERIMPOSED DEAD LOADS: . . . . . 25 PSF
SUPERIMPOSED LIVE LOADS:
RESIDENTIAL . . . . . 40 PSF
BALCONIES . . . . . 60 PSF

5. WIND NET UPLIFT: ARE AS INDICATED ON PLANS

SYMBOLS

THESE SYMBOLS ARE MOST OFTEN ENCOUNTERED IN THE FOLLOWING DRAWINGS: ELEVATIONS, DIMENSION PLANS, SECTIONS & STRUCTURAL PLANS

+/- 0'-0" TOP OF SUB-FLOOR — TYPE OF ELEVATION MARK USED TO INDICATE A PREFERRED TARGET ELEVATION - TRUE MEASUREMENT.

A / A5 — TYPE OF DETAIL MARK USED TO INDICATE A SECTION OR DETAIL ASSOCIATED WITH A PLAN VIEW

A / A5 — TYPE OF DETAIL MARK USED TO INDICATE A SECTION IS: SECTION "A" ON SHEET "A5", TAIL INDICATES DIRECTION OF VIEW

A / A5 — TYPE OF SECTION MARK USED TO INDICATE A VIEW TAKEN IN THE DIRECTION OF THE ARROW IS: SECTION "A" FOUND ON "A5" OF THE PROJECT PLANS

FRAMING ANCHOR SCHEDULE

APPLICATION	MANUF'R/MODEL	CAP.
TRUSS TO WALL:	SIMPSON H2.5a	750#
HEADER TO KING STUD(S):	SIMPSON ST22	1370#
PLATE TO STUD:	SIMPSON SP2	1065#
STUD TO SILL:	SIMPSON SPH	565#
PORCH BEAM TO POST:	SIMPSON PC66/EPC66	1700#
PORCH POST TO FND.:	SIMPSON ABU66	2300#
MISC. JOINTS	SIMPSON A34	315#/240#

NOTE:
ALL ANCHORS SHALL BE SECURED W/ NAILS AS PRESCRIBED BY THE MANUFACTURER FOR MAXIMUM JOINT STRENGTH, UNLESS NOTED OTHERWISE.

NOTE:
REFER TO THE INCLUDED STRUCTURAL DETAILS FOR ADDITIONAL ANCHORS/ JOINT REINFORCEMENT AND FASTENERS.

NOTE:
ALL UNLISTED JOINTS IN THE LOAD PATH SHALL BE REINFORCED WITH SIMPSON A34 FRAMING ANCHORS, TYPICAL T.O.

NOTE:
"SIMPSON" PRODUCT APPROVALS:
MIAMI/DADE COUNTY REPORT #97-0107.05, #96-1126.11, #99-0623.04
SBCCI NER-443, NER-393

GENERAL NAILING SCHEDULE:

NUMBER OF NAILS FOR CONNECTING WOOD MEMBERS: CONNECTION	COMMON NAILS	Nr. / SPACING
BRIDGING TO JOIST, TOE NAIL	16d	2 EA. END
2" SUBFLOOR TO JOIST, BLIND & FACE NAILING	16d	2
SOLE PLATE TO JOIST OR BLOCKING FACE NAILED	16d	16" O.C.
TOP OR SOLE PLATE TO STUD END NAILED	16d	2
STUD TO SOLE PLATE, TOE NAILED	8d	3 OR 2 16d
DOUBLE STUDS, FACE NAILED	16d	24" O.C.
DOUBLE TOP PLATES, FACE NAILED	16d	16" O.C.
TOP PLATES - LAPS & INTERSECTIONS FACE NAILED	16d	2
1 X 6 SHEATHING TO EACH POINT OF BEARING, FACE NAILED	8d	2
BUILT-UP CORNER STUDS, FACE NAILED	16d	30" O.C.
BUILT-UP GIRDERS & BEAMS	20d	32" O.C. @ TOP & BOTTOM & STAGGERED - 2 @ EA. END & @ SPLICES
3/4" PLYWOOD SUBFLOORING	8d	6" O.C. @ EDGES 10" O.C. @ INTERMEDIATE
OSB SHEATHING, 7/16" THICK	8d	6" O.C. @ EDGES 10" O.C. @ INTERMEDIATE
1/8" FIBERBOARD SHEATHING	6d	3" O.C. @ EDGES 6" O.C. @ INTERMEDIATE

A. NAILS, BOLTS AND OTHER METAL CONNECTORS WHICH ARE USED IN LOCATIONS EXPOSED TO THE WEATHER SHALL BE GALVANIZED OR OTHERWISE CORROSION RESISTANT.

B. IN GENERAL, NAILS SHALL PENETRATE THE SECOND MEMBER A DISTANCE EQUAL TO THE THICKNESS OF THE MEMBER BEING NAILED THERETO, OR GREATER.

C. THERE SHALL BE NOT LESS THAN 2 NAILS PER CONNECTION.

D. GLUING SHALL NOT BE CONSIDERED AN ACCEPTABLE CONNECTOR IN LIEU OF THOSE SPECIFIED HEREIN.

E. FORMED METAL CONNECTORS, AS PER THE SCHEDULE HEREIN, SHALL HAVE THE NUMBER OF NAILS INSTALLED AS REQUIRED BY THE MANUFACTURER, OR AS DIRECTED BY THE PLANS.

F. NAILS PROJECTING BEYOND THE LAST WOOD MEMBER SHALL BE CLINCHED, WHEREVER POSSIBLE.

G. NOTES IN THE "PLANS" PACKAGE OF THE CONSTRUCTION DOCUMENTS SUPERSEDE SIZES & SPACINGS OF NAILS CONTAINED HEREIN.

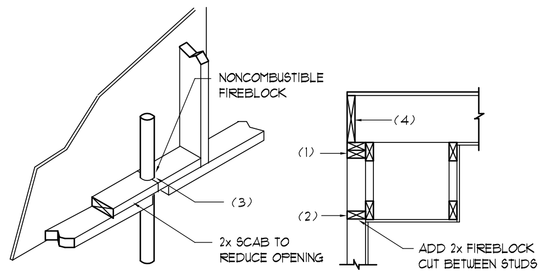

PENETRATIONS — SOFFIT/DROPPED CLG.

FIREBLOCKING NOTES:

FIREBLOCKING SHALL BE INSTALLED IN WOOD FRAME CONSTRUCTION IN THE FOLLOWING LOCATIONS:

1. IN CONCEALED SPACES OF STUD WALLS AND PARTITIONS INCLUDING FURRED SPACES AT CEILING AND FLOOR LEVELS.

2. AT ALL INTERCONNECTIONS BETWEEN CONCEALED VERTICAL AND HORIZONTAL SPACES SUCH AS OCCUR AT SOFFITS, DROP CEILINGS, COVE CEILINGS, ETC.

3. AT OPENINGS AROUND VENTS, PIPES, DUCTS, CHIMNEYS AND FIREPLACES AT CEILING AND FLOOR LEVELS WITH "PYROPANEL MULTIFLEX SEALANT"

4. AT ALL INTERCONNECTIONS BETWEEN CONCEALED VERTICAL STUD WALL OR PARTITION SPACES AND CONCEALED SPACES CREATED BY AN ASSEMBLY OF FLOOR JOISTS, FIREBLOCKING SHALL BE PROVIDED FOR THE FULL DEPTH OF THE JOISTS AT THE ENDS AND OVER THE SUPPORTS.

Fire Stopping DET'S (B)
SCALE: NONE

Nicholas P Geisler
Digitally signed by Nicholas P Geisler
Date: 2025.06.01 15:05:21 -04'00'

REVISION:

Copyright 2025 © N.P. Geisler, Architect

DRAWN: MPB

CUSTOM RESIDENTIAL DESIGN for:
SVETLANA KHOMICH
COLUMBIA COUNTY, FLORIDA
STRUCTURAL INFORMATION

Celebrating 53 Years of Service
1972 - 2025
N.P. Geisler, Architect
AR0007005
CUSTOM ARCHITECTURAL DESIGN
NICHOLAS PAUL GEISLER ARCHITECT
1758 NW Brown Rd.
Lake City, FL 32055
386-365-4355

DATE: 10 MAY 2025
COMM: 2K2518
SHEET: S.1
1 OF 10

AR0007005