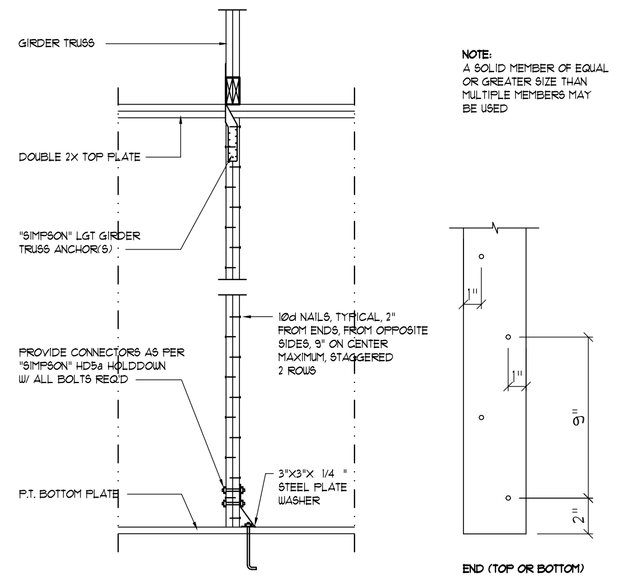

Girder Truss Column DET.

SCALE: 1/2" = 1'-0"

A

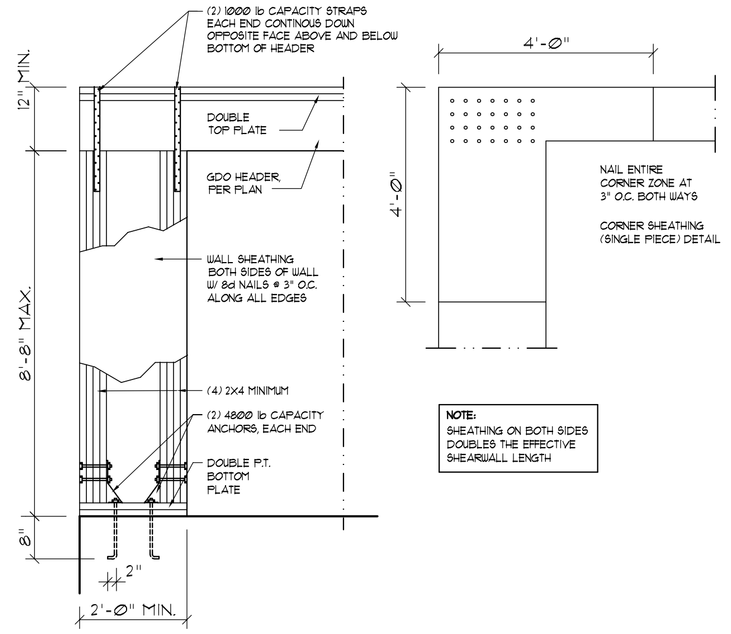

Garage End Wall DETAILS

SCALE: 1/2" = 1'-0"

B

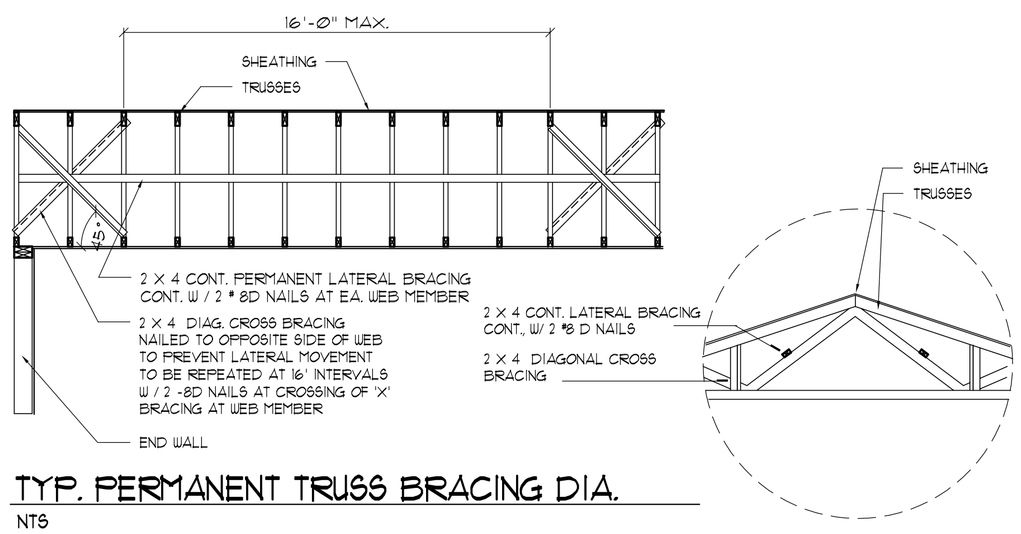

TYP. PERMANENT TRUSS BRACING DIA.

NTS

NOTE: ALL WOOD TO BE NUMBER 2 GRADE SOUTHERN YELLOW PINE

Truss Bracing DETAILS

SCALE: AS NOTED

C

ROOF SHEATHING FASTENINGS			
NAILING ZONE	SHEATHING TYPE	FASTENER	SPACING
1	7/16" OSB OR 15/32 CDX	8d COMMON OR 8d HOT DIPPED GALVANIZED BOX NAILS	6 in. o.c. EDGE 12 in. o.c. FIELD
2			6 in. o.c. EDGE 6 in. o.c. FIELD
3			4 in. o.c. @ GABLE TRUSS OR GABLE END WALL 6 in. o.c. EDGE 6 in. o.c. FIELD

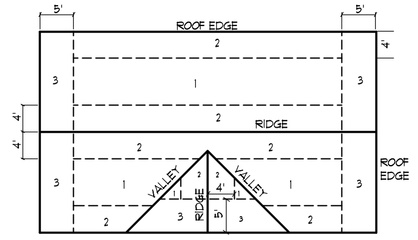

ROOF SHEATHING NAILING ZONES
(GABLE ROOF)

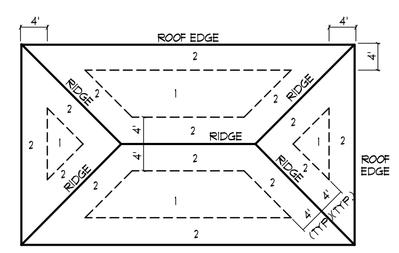

ROOF SHEATHING NAILING ZONES
(HIP ROOF)

Roof Nail Pattern DET.

SCALE: NONE

E

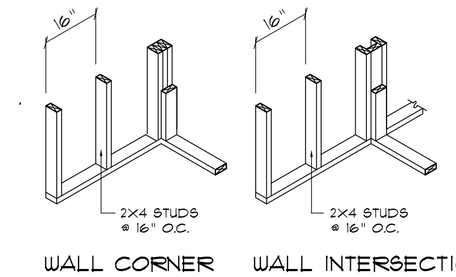

WALL CORNER WALL INTERSECTION

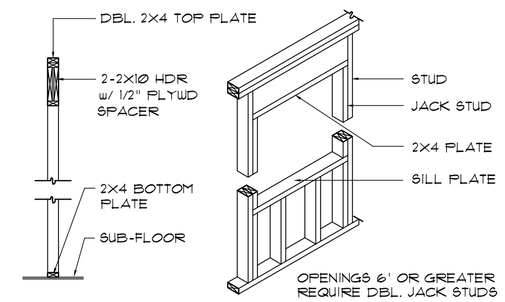

TYPICAL WINDOW HEADER

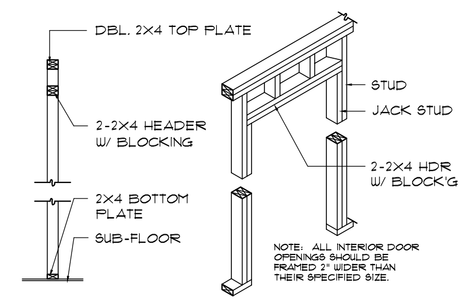

NON-BEARING WALL HEADER

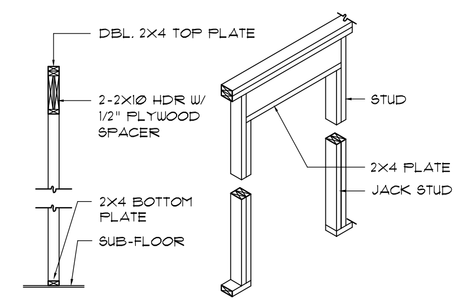

BEARING WALL HEADER

Wall Framing/ Header DET'S

SCALE: NONE

F

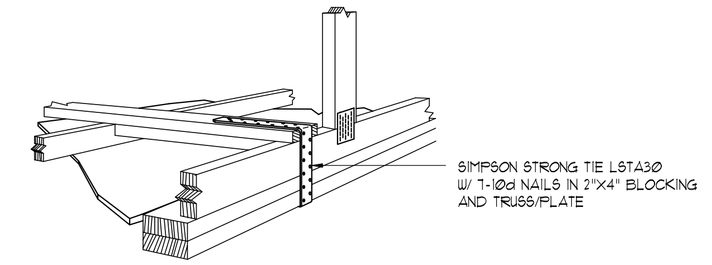

GABLE END GYPSUM DIAPHRAGM HOLDOWN CONNECTOR

SCALE: NONE

G.1

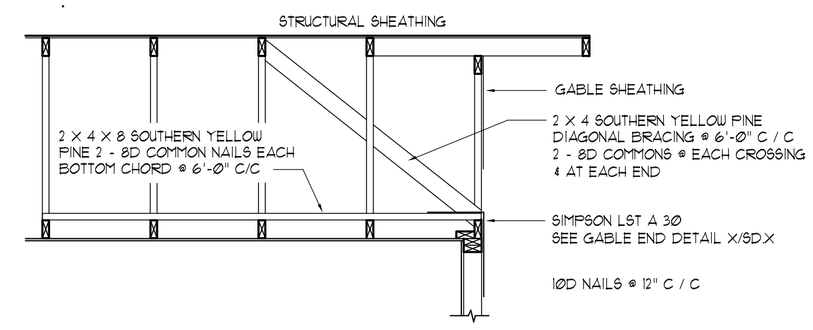

END WALL BRACING FOR CEILING DIAPHRAGM

NTS (ALTERNATIVE TO BALLOON FRAMING)

G.2

NOTE: ALL WOOD TO BE NUMBER 2 GRADE SOUTHERN YELLOW PINE

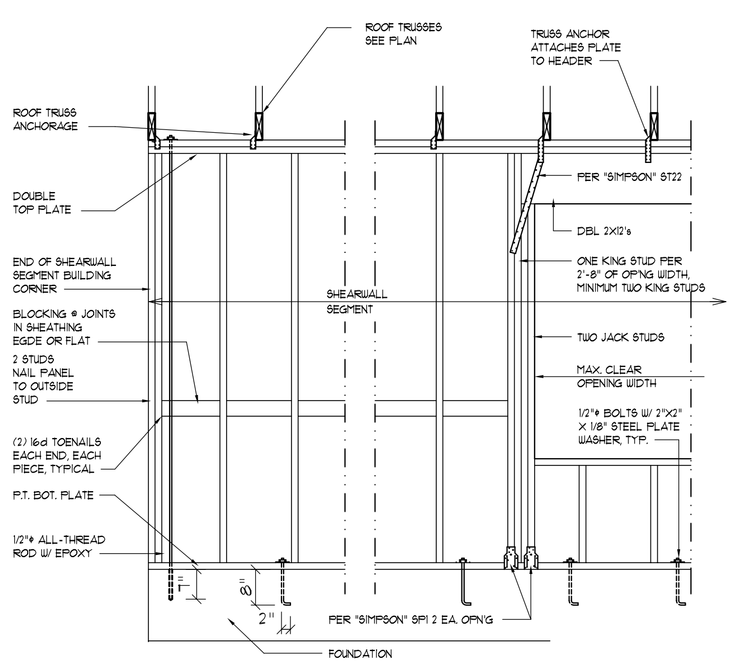

SHEARWALL NOTES:

1. ALL SHEARWALLS SHALL BE TYPE 2 SHEARWALLS AS DEFINED BY STD 10-97 SBBSCI 305.4.3.
2. THE WALL SHALL BE ENTIRELY SHEATHED WITH 7/16" O.S.B. INCLUDING AREAS ABOVE AND BELOW OPENINGS
3. ALL SHEATHING SHALL BE ATTACHED TO FRAMING ALONG ALL FOUR EDGES WITH JOINTS FOR ADJACENT PANELS OCCURING OVER COMMON FRAMING MEMBERS OR ALONG BLOCKING.
4. NAIL SPACING SHALL BE 4" O.C. EDGES AND 8" O.C. IN THE FIELD.
5. TYPE 2 SHEARWALLS ARE DESIGNED FOR THE OPENING IT CONTAINS. MAXIMUM HEIGHT OF OPENING SHALL BE 5/6 TIMES THE WALL HEIGHT. THE MINIMUM DISTANCE BETWEEN OPENINGS SHALL BE THE WALL HEIGHT/3.5 FOR 8'-0" WALLS (2'-3").

OPENING WIDTH	JACK STUDS	16d TOE NAILS EACH END
UP TO 6'-0"	(1) 2x4 OR (1) 2x6	1
IE 6' TO 9'-0"	(3) 2x4 OR (1) 2x6	2
IE 9' TO 12'-0"	(5) 2x4 OR (2) 2x6	3

Shear Wall DETAILS

SCALE: NONE

D

HEADER SPANS FOR EXTERIOR BEARING WALLS								
HEADERS SUPPORTING:	HEADER SIZE	BUILDING WIDTH (FT)						
		20'		28'		36'		
		SPAN	# JACKS	SPAN	# JACKS	SPAN	# JACKS	
ROOF, CEILING	2-2x4	3'-6"	1	3'-2"	1	2'-10"	1	
	2-2x6	5'-5"	1	4'-8"	1	4'-2"	1	
	2-2x8	6'-10"	1	5'-11"	2	5'-4"	1	
	2-2x10	8'-5"	2	7'-3"	2	6'-6"	2	
	2-2x12	9'-9"	2	8'-5"	2	7'-6"	2	
	3-2x8	8'-4"	1	7'-5"	1	6'-8"	1	
	3-2x10	10'-6"	1	9'-1"	2	8'-2"	1	
	3-2x12	12'-2"	2	10'-7"	2	9'-5"	2	
	4-2x8	9'-2"	1	8'-4"	1	9'-2"	1	
	4-2x10	11'-8"	1	10'-6"	1	9'-5"	1	
	4-2x12	14'-1"	1	12'-2"	2	10'-11"	1	

CUSTOM RESIDENCE and AIRCRAFT HANGER for:
DON DOWNS
CANNON CREEK AIRPARK, COLUMBIA COUNTY, FLORIDA
WALL SECTIONS

Celebrating 54 Years of Service
1972 - 2026
N.P. Geisler, Architect
AR0007005

CUSTOM ARCHITECTURAL DESIGN

NICHOLAS PAUL GEISLER ARCHITECT
1758 NW Brown Rd.
Lake City, FL 32055
386-365-4355

Copyright 2026 ©
N.P. Geisler, Architect

DRAWN: MPG

DATE OF ISSUE: 02 FEB 2026

COMM: 2K2604

REVISIONS: 17 MAR 2026

SHEET: S.4

4 OF 4

Nicholas P Geisler
Digitally signed by Nicholas P Geisler
Date: 2026.03.17 13:33:49 -04'00'
AR0007005

These drawings, as instruments of service, are the sole property of the architect, and may not be used, copied or reproduced in whole or in part for use on or incorporated within any other job without specific and individual authorization by the architect.

All revised sheets shall supercede any previously issued version(s). Only the latest version shall be employed for this project. All previously issued versions of this sheet SHALL BE DISCARDED.