REINFORCEMENT REQUIREMENTS:
ALL STEEL REINFORCEMENT SHALL BE GRADE 60 (60 KSI).
ALL LONGITUDINAL REBAR SHALL BE RUN CONTINUOUSLY SUCH THAT THE FOUNDATION SYSTEM ACTS IN A MONOLITHIC FASHION.
ALL REBAR OVERLAPS (LAP SPLICES) SHALL BE AT LEAST 25".

CONCRETE REQUIREMENTS:
. ALL CONCRETE SHALL BE OF AT LEAST 3000PSI 28-DAY COMPRESSIVE STRENGTH.
. ALL CONCRETE GRADE BEAMS AND SLABS SHALL BE RUN CONTINUOUSLY AS TO BEHAVE IN A MONOLITHIC FASHION.
. CONCRETE SLAB THICKNESS SHALL BE 4" ABOVE THE FOOTERS, AS SHOWN IN THE DETAILS.
STEP DOWNS AND LEDGES IN THE CONCRETE SHALL NOT REDUCE THE CONCRETE COVER REQUIREMENT FOR STEEL REINFORCEMENT.
. A 6 MIL VAPOR BARRIER SHALL BE PLACED PRIOR TO CONCRETE POUR, AS SHOWN IN THE DETAILS.

Florida Building Code 2017 6th Edition

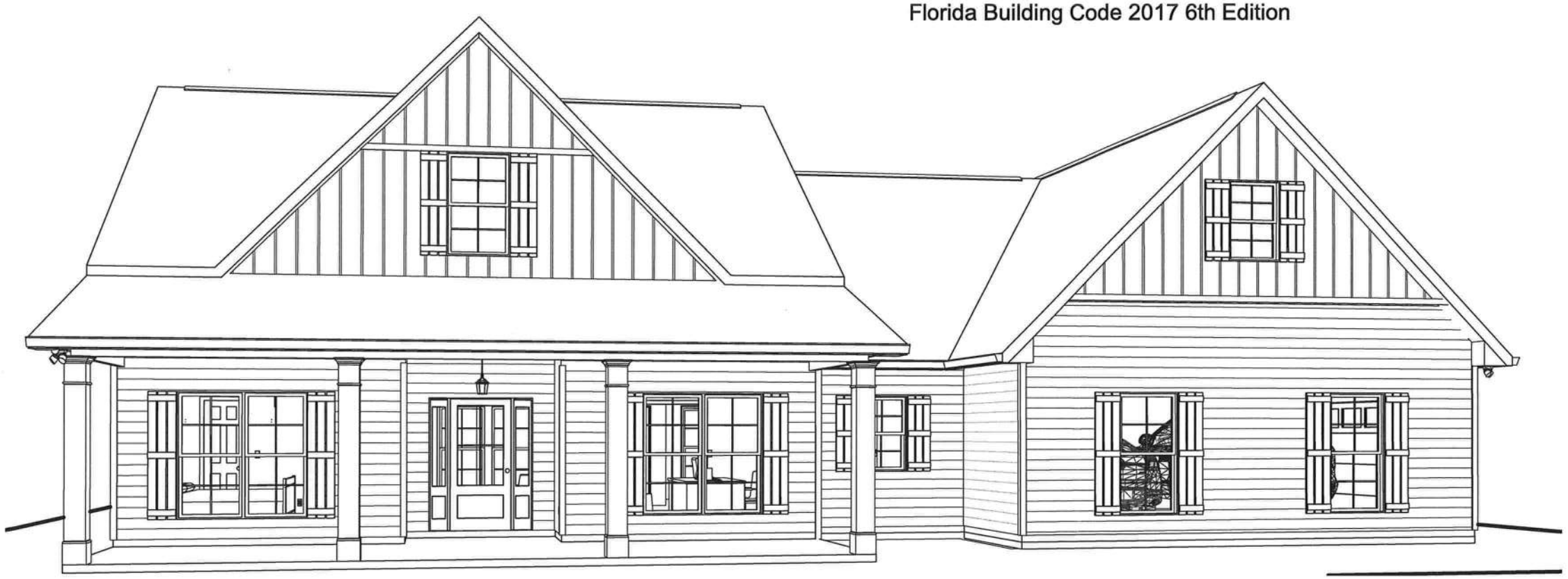

1 FRONT PERSPECTIVE

GENERAL NOTES

64

- MIN 9'-1 1/8" CEILING HEIGHT ON FIRST FLOOR
- ALL LOAD BEARING WALLS & EXT. OPENINGS TO HAVE (2) 2X10 HEADERS UNLESS OTHERWISE NOTED
- STANDARD FIRST FLOOR WINDOW HEADERS TO BE FRAMED DOWN 2'-2" FROM T.O.P. EXCEPT AS NOTED
- 7/16" O.S.B. AND HOUSEWRAP REQUIRED
- DIMENSIONS ARE TO SHEATHING EXTERIOR; SUBTRACT 1/2" FROM DIMENSIONS FOR EXTERIOR WINDOW AND DOOR FRAMING LOCATION IF OPENINGS ARE FRAMED BEFORE SHEATHING INSTALLATION
- ALL INTERIOR DOORS ARE EITHER CENTERED ON WALLS OR R.O. STARTED MIN OF4" FROM ADJOINING WALL UNLESS OTHERWISE DIMENSIONED
- NUMBER OF STAIR TREADS & RISERS MAY VARY AS A RESULT OF LOCAL BUILDING CODES, STANDARDS AND FINAL GRADE
- CLOSET SHELF HEIGHT OFF FLOOR:
  SINGLE-68"
  DOUBLE 42" & 84"
- ALL PLUMBING FIXTURES SHOWN ARE A REPRESENTATION OF SIZE AN LOCATION ONLY. ACTUAL STYLE AND BRAND OF FIXTURES MAY VARY PER OFFICE LOCATION
- ALL TUBS/SHOWERS ARE TO HAVE NAILERS AT FLANGE
- INSTALL A 24" WIDE WALKWAY FROM ATTIC ACCESS TO FURNACE PLATFORM
- FRAMER TO INSTALL DRYWALL CLIPS IN LIEU OF DEADWOOD ON ALL WALLS
- **PORCH, STOOP, & DECK HARDRAILS NOT INCLUDED W/ SLAB FOUNDATION**
- **RAILINGS ARE A FORCED OPTION WHEN PORCH IS OVER 30" HIGH**

COLUMBIA COUNTY BUILDING DEPARTMENT
Received for FILE COPY
Code Compliance
PLANS EXAMINER

JAMES ZALESKI

Digitally signed by JAMES ZALESKI
Date: 2020.11.06 12:19:57 -05'00'

JAMES A. ZALESKI
LICENSE
No. 51544
STATE OF FLORIDA
PROFESSIONAL ENGINEER

James Zaleski P.E 51544 2305 Haverhill Rd Tallahassee,Fl 32312 PH 850-766-7778

SHEET LIST - CONSTRUCTION

Sheet Number	Sheet Name
C-0	COVER SHEET
E-1	FRONT & REAR ELEVATIONS
E-2	LEFT & RIGHT ELEVATION
E-3	ROOF OVERVIEW
F-1	FOUNDATION
F-1.1	FOUNDATION DETAILS
F-2	FIRST FLOOR PLAN
H-1	FIRST FLOOR ELEC & HVAC
S-1	DETAILS & SECTIONS
S-2	DETAILS AND SECTIONS
S-3	DETAILS AND SECTIONS

OPT. PAPER SIZE: for 1/4" =1'-0" on 24"x36" PAPER SIZE ENLARGE PRINTS TO 200%

FINAL CONSTRUCTION PLANS

TO REPORT COPYRIGHT VIOLATIONS CALL (770)532-1128 THE USE OF THIS PLAN BY ANYONE OTHER THAN AN AGENT OF "AMERICA'S HOME PLACE, INC." IS IN VIOLATION OF THE FEDERAL COPYRIGHT VIOLATION ACT. $100 REWARD FOR RECOVERING AN ACTUAL COPYRIGHT INFRINGEMENT.
©COPYRIGHT-ALL RIGHTS RESERVED NOTE:VIOLATORS OF THE COPYRIGHT WILL BE PROSECUTED TO THE FULLEST EXTENT OF THE LAW. THIS WORK IS THE INTELLECTUAL PROPERTY OF AMERICA'S HOME PLACE AND SHALL NOT BE REPRODUCED WITHOUT PERMISSION.

PAPER SIZE: 11" x 17" | SCALE: 1/8" = 1'-0"

Revision Schedule

Revision Number	Revision Description	Revision Date
	PRELIMINARY	9/23/20

AREAS:

FIRST FLOOR HEATED	2,198 SF
GARAGE	560 SF
FRONT PORCH	367 SF
REAR PORCH	167 SF
TOTAL UNDER ROOF	3,292 SF

THE: BERGLUND M. FRMHOUSE

FOR: RALPH AND ELIZABETH BONANZA

TBD JEANLEA PLACE.
COLUMBIA - FL. 32038

SOLD BY: A. LOCAY

OFFICE: GAINESVILLE

JOB# 59-20-042

2x6 EXTERIOR WALLS UNLESS OTHERWISE NOTED

FOUNDATION TYPE: MONOSLAB

DRAWN BY: AP

CHECKED BY: B. TOOMBS

PRINT DATE: 11/6/2020 9:06:32 AM

PROPERTY OF: AMERICA'S HOME PLACE

©COPYRIGHT - 2018

SHEET NUMBER: C-0

COVER SHEET

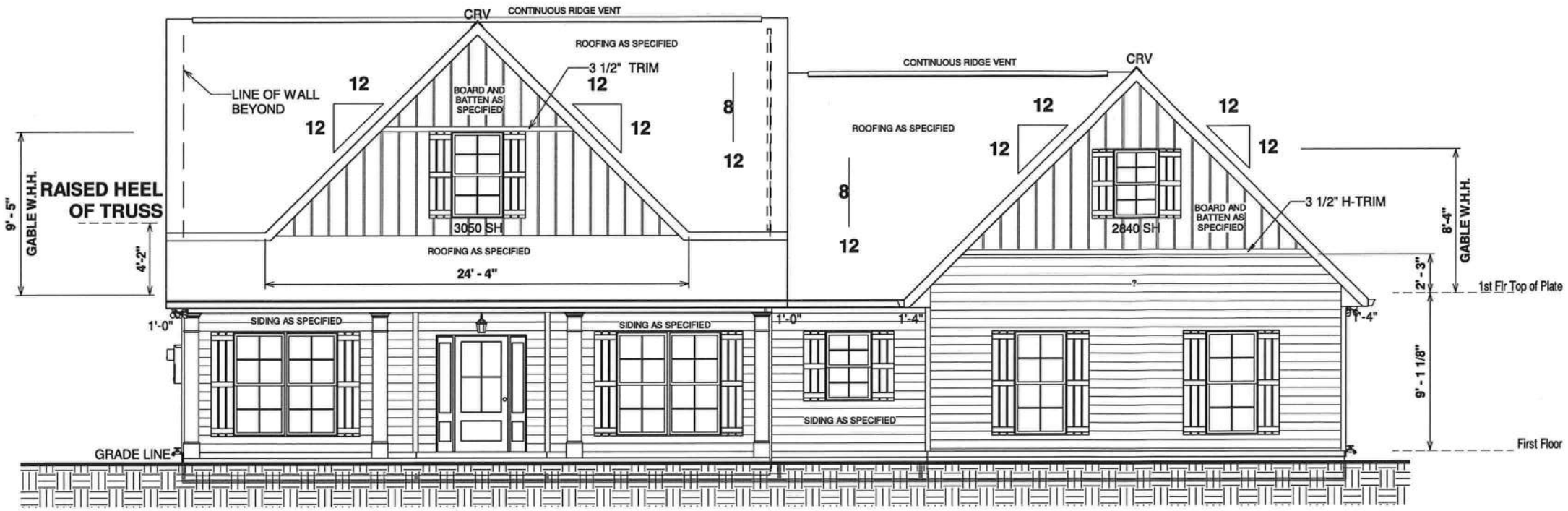

1 FRONT ELEVATION
1/8" = 1'-0"

O.W.H. - 8:12 = 6 11/16"
8:12 @ FRONT RAISED HEEL= 50"
12:12 = 10 3/4"
4:12 PORCH = 4 3/8"

ELEVATION NOTES

- MIN 9'-1 1/8" CEILING HEIGHT ON FIRST FLOOR
- 7/16" O.S.B AND HOUSEWRAP REQUIRED
- ROOF OVERHANGS, AS NOTED, ARE FROM WALL SHEATHING TO OUTSIDE OF FASCIA
- FINAL GRADE TO BE DETERMINED ON SITE
- FOUNDATION DRAWN AS REPRESENTATION ONLY

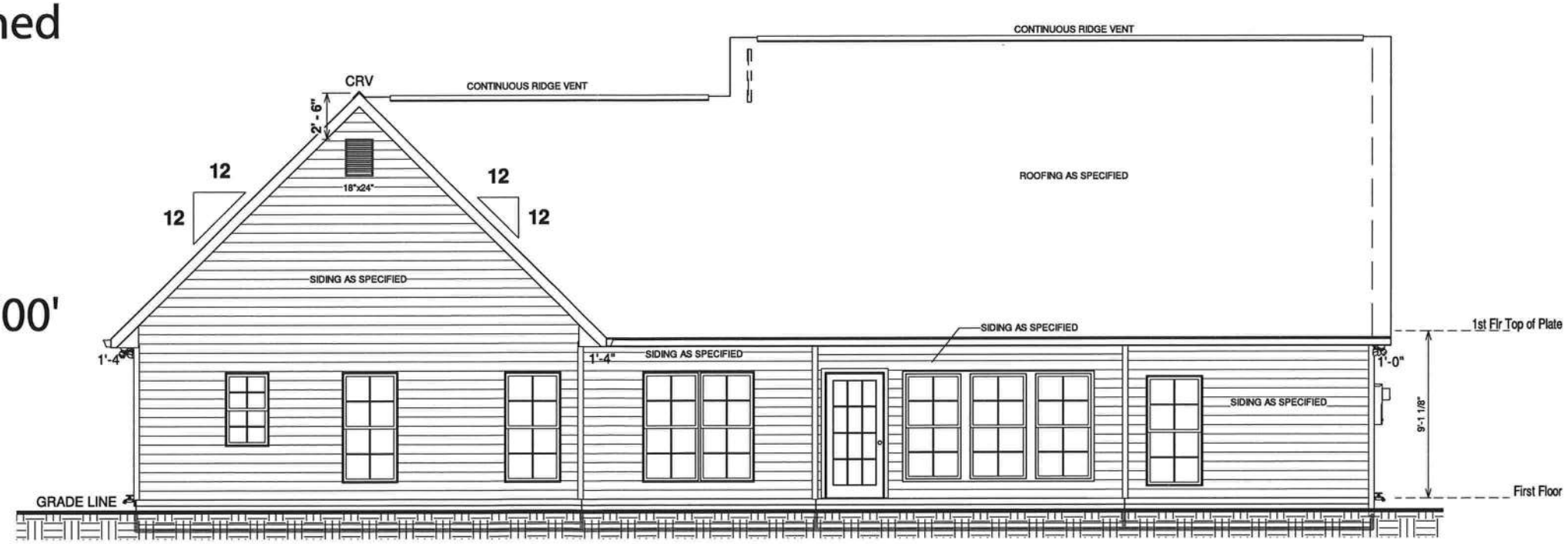

2 REAR ELEVATION
1/8" = 1'-0"

JAMES ZALESKI

Digitally signed by JAMES ZALESKI
Date: 2020.11.06 12:19:27 -05'00'

JAMES A. ZALESKI
LICENSE
No. 51544
STATE OF FLORIDA
PROFESSIONAL ENGINEER

Reviewed for Compliance
James Zaleski PE 51544 2305 Haverhill Rd
Tallahassee, Fl 32312 PH 850-766-7778 See Wind Load Details

OPT. PAPER SIZE: for 1/4" =1'-0" on 24"x36" PAPER SIZE ENLARGE PRINTS TO 200%

FINAL CONSTRUCTION PLANS

Revision Schedule		
Revision Number	Revision Description	Revision Date
	PRELIMINARY	9/23/20

AREAS:	
FIRST FLOOR HEATED	2,198 SF
GARAGE	560 SF
FRONT PORCH	367 SF
REAR PORCH	167 SF
TOTAL UNDER ROOF	3,292 SF

THE: BERGLUND M. FRMHOUSE
FOR: RALPH AND ELIZABETH BONANZA
TBD JEANLEA PLACE.
COLUMBIA - FL. 32038
OFFICE: GAINESVILLE
SOLD BY: A. LOCAY

JOB# 59-20-042
2x6 EXTERIOR WALLS UNLESS OTHERWISE NOTED
FOUNDATION TYPE: MONOSLAB

DRAWN BY: AP
CHECKED BY: B. TOOMBS
PRINT DATE: 11/6/2020 9:06:33 AM

PROPERTY OF: AMERICA'S HOME PLACE
©COPYRIGHT - 2018

SHEET NUMBER: E-1
FRONT & REAR ELEVATIONS

TO REPORT COPYRIGHT VIOLATIONS CALL (770)532-1128 THE USE OF THIS PLAN BY ANYONE OTHER THAN AN AGENT OF "AMERICA'S HOME PLACE, INC." IS IN VIOLATION OF THE FEDERAL COPYRIGHT VIOLATION ACT. $100 REWARD FOR RECOVERING AN ACTUAL COPYRIGHT INFRINGEMENT.
©COPYRIGHT-ALL RIGHTS RESERVED NOTE:VIOLATORS OF THE COPYRIGHT WILL BE PROSECUTED TO THE FULLEST EXTENT OF THE LAW. THIS WORK IS THE INTELLECTUAL PROPERTY OF AMERICA'S HOME PLACE AND SHALL NOT BE REPRODUCED WITHOUT PERMISSION.

PAPER SIZE: 11" x 17" SCALE: 1/8" = 1'-0"

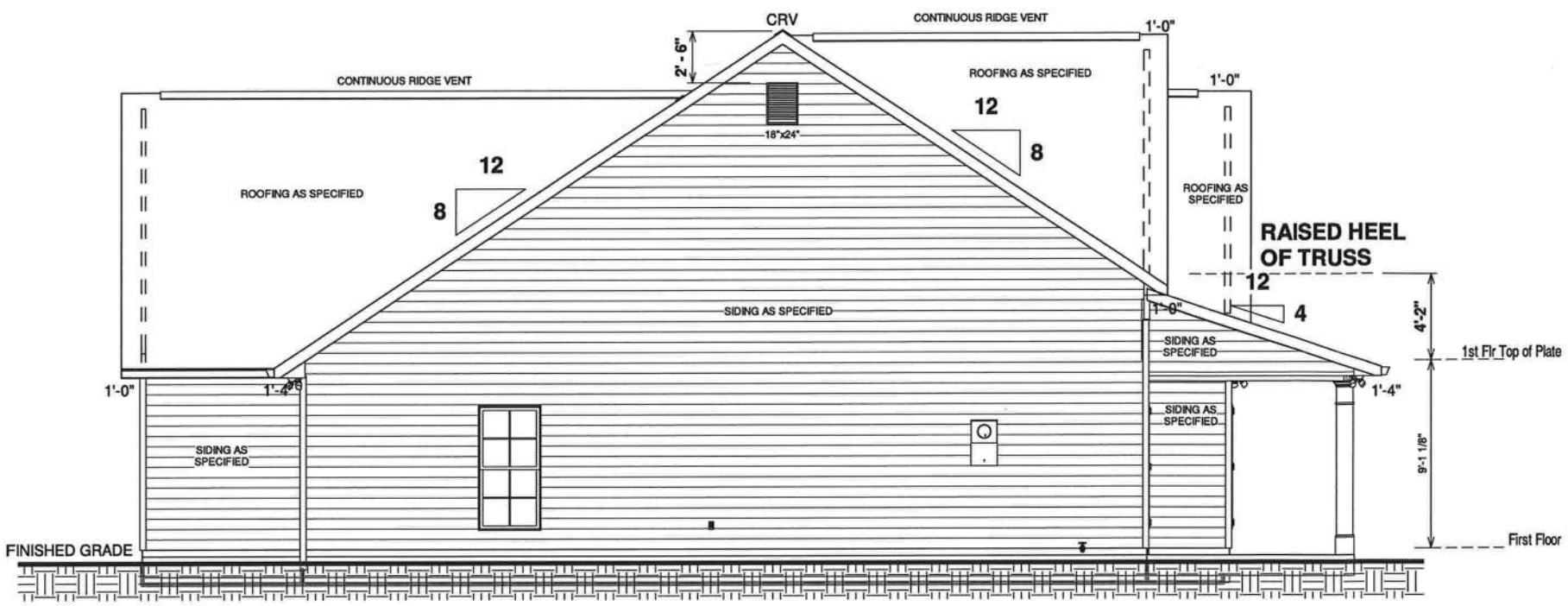

1 LEFT ELEVATION
1/8" = 1'-0"

O.W.H. - 8:12 = 6 11/16"
8:12 @ FRONT RAISED HEEL= 50"
12:12 = 10 3/4"
4:12 PORCH = 4 3/8"

ELEVATION NOTES

- MIN 9'-1 1/8" CEILING HEIGHT ON FIRST FLOOR
- 7/16" O.S.B AND HOUSEWRAP REQUIRED
- ROOF OVERHANGS, AS NOTED, ARE FROM WALL SHEATHING TO OUTSIDE OF FASCIA
- FINAL GRADE TO BE DETERMINED ON SITE
- FOUNDATION DRAWN AS REPRESENTATION ONLY

JAMES ZALESKI

Digitally signed by JAMES ZALESKI
Date: 2020.11.06 12:19:08 -05'00'

JAMES A. ZALESKI
LICENSE
No. 51544
STATE OF FLORIDA
PROFESSIONAL ENGINEER

Reviewed for Compliance
James Zaleski PE 51544 2305 Haverhill Rd
Tallahassee, Fl 32312 PH 850-766-7778 See Wind Load Details

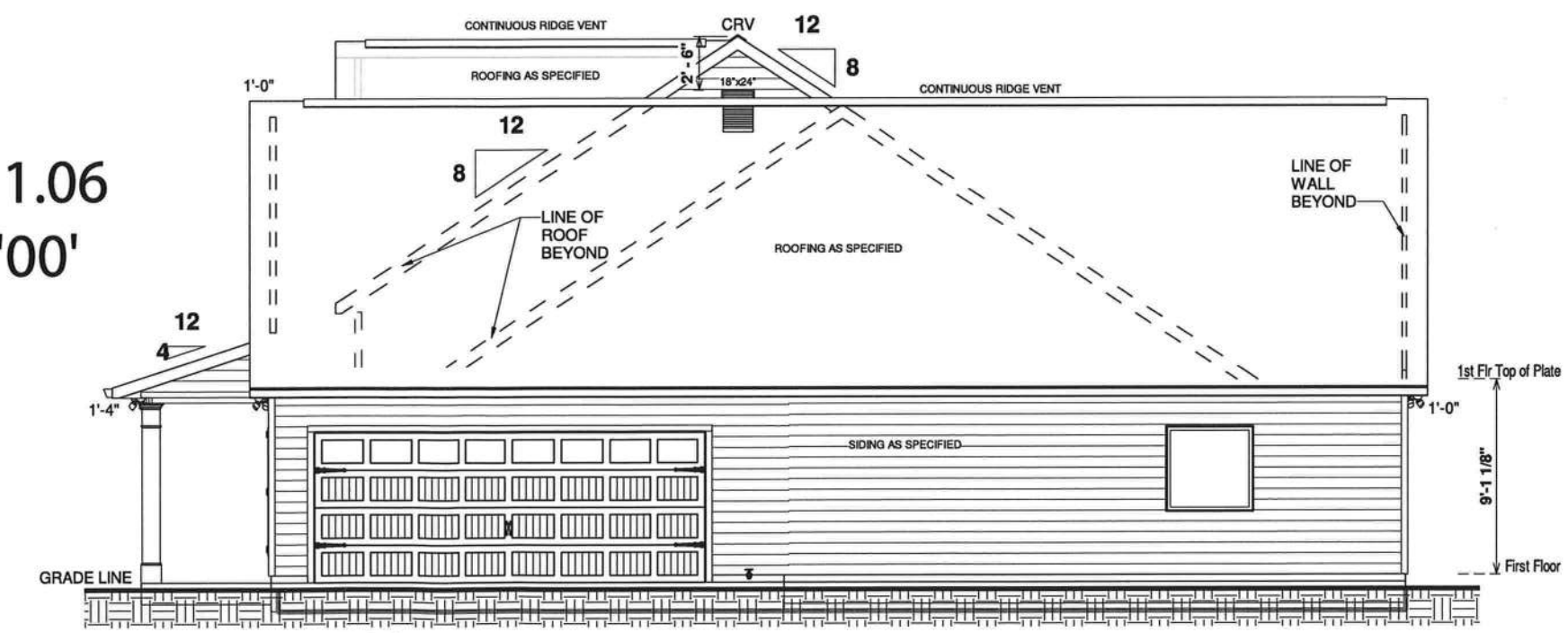

2 RIGHT ELEVATION
1/8" = 1'-0"

OPT. PAPER SIZE: for 1/4" =1'-0" on 24"x36" PAPER SIZE ENLARGE PRINTS TO 200%

FINAL CONSTRUCTION PLANS

Revision Schedule		
Revision Number	Revision Description	Revision Date
	PRELIMINARY	9/23/20

AREAS:	
FIRST FLOOR HEATED	2,198 SF
GARAGE	560 SF
FRONT PORCH	367 SF
REAR PORCH	167 SF
TOTAL UNDER ROOF	3,292 SF

THE: BERGLUND M. FRMHOUSE
FOR: RALPH AND ELIZABETH BONANZA
TBD JEANLEA PLACE.
COLUMBIA - FL. 32038
OFFICE: GAINESVILLE
SOLD BY: A. LOCAY

JOB#: 59-20-042
2x6 EXTERIOR WALLS UNLESS OTHERWISE NOTED
FOUNDATION TYPE: MONOSLAB
DRAWN BY: AP
CHECKED BY: B. TOOMBS
PRINT DATE: 11/6/2020 9:06:34 AM
PROPERTY OF: AMERICA'S HOME PLACE
©COPYRIGHT - 2018
SHEET NUMBER: E-2
LEFT & RIGHT ELEVATION

TO REPORT COPYRIGHT VIOLATIONS CALL (770)532-1128 THE USE OF THIS PLAN BY ANYONE OTHER THAN AN AGENT OF "AMERICA'S HOME PLACE, INC." IS IN VIOLATION OF THE FEDERAL COPYRIGHT VIOLATION ACT. $100 REWARD FOR RECOVERING AN ACTUAL COPYRIGHT INFRINGEMENT.
©COPYRIGHT-ALL RIGHTS RESERVED NOTE:VIOLATORS OF THE COPYRIGHT WILL BE PROSECUTED TO THE FULLEST EXTENT OF THE LAW. THIS WORK IS THE INTELLECTUAL PROPERTY OF AMERICA'S HOME PLACE AND SHALL NOT BE REPRODUCED WITHOUT PERMISSION.

PAPER SIZE: 11" x 17" SCALE: 1/8" = 1'-0"

O.W.H. - 8:12 = 6 11/16"
8:12 @ FRONT RAISED HEEL= 50"
12:12 = 10 3/4"
4:12 PORCH = 4 3/8"

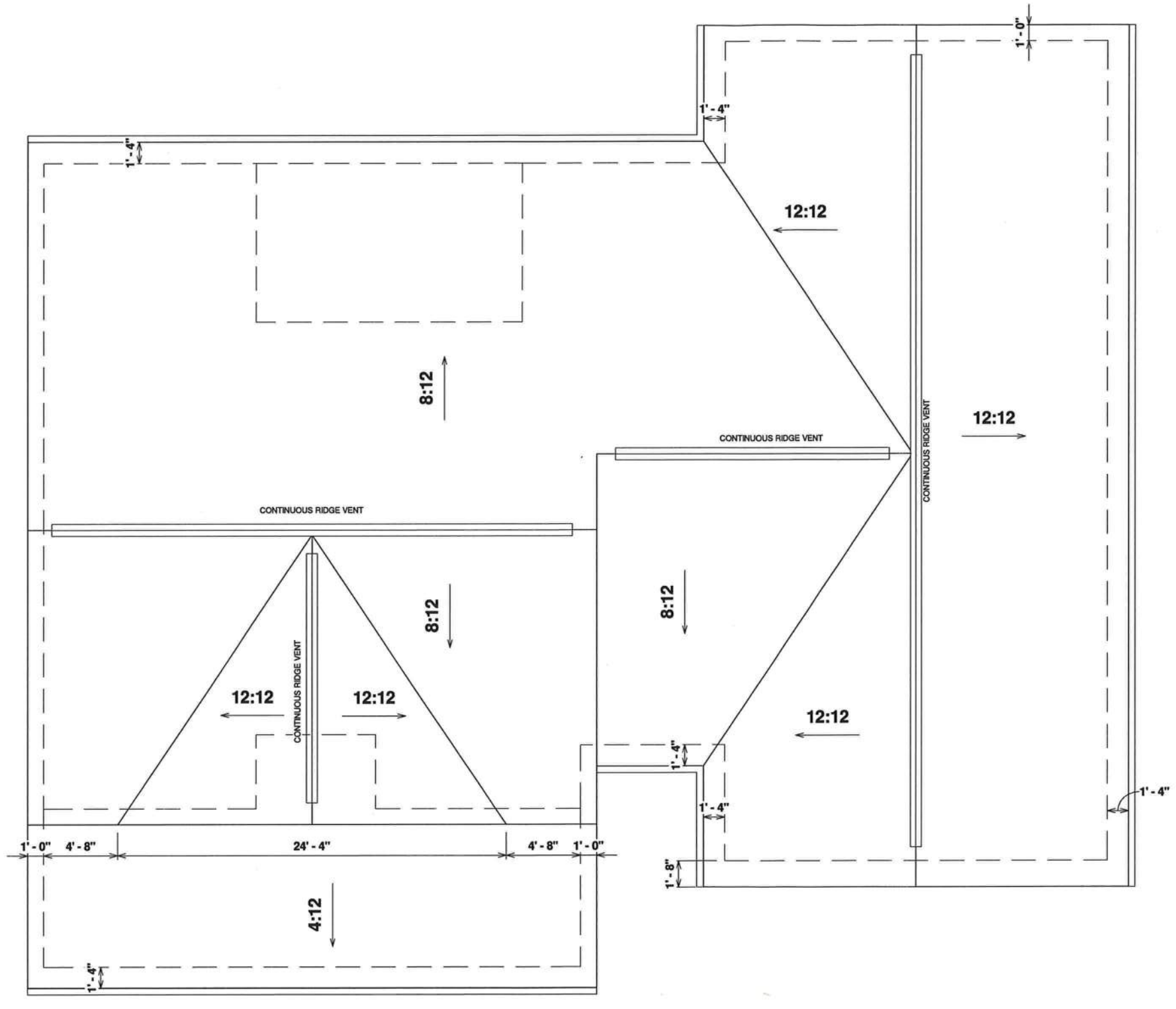

1 ROOF OVERVIEW
1/8" = 1'-0"

Reviewed for Compliance
James Zaleski PE 51544 2305 Haverhill Rd
Tallahassee, Fl 32312 PH 850-766-7778 See Wind Load Details

JAMES ZALESKI

Digitally signed by JAMES ZALESKI
Date: 2020.11.06 12:18:50 -05'00'

JAMES A. ZALESKI
LICENSE
No. 51544
STATE OF FLORIDA
PROFESSIONAL ENGINEER

OPT. PAPER SIZE: for 1/4" =1'-0" on 24"x36" PAPER SIZE ENLARGE PRINTS TO 200%

FINAL CONSTRUCTION PLANS

Revision Schedule

Revision Number	Revision Description	Revision Date
	PRELIMINARY	9/23/20

AREAS:

FIRST FLOOR HEATED	2,198 SF
GARAGE	560 SF
FRONT PORCH	367 SF
REAR PORCH	167 SF
TOTAL UNDER ROOF	3,292 SF

THE: BERGLUND M. FRMHOUSE

FOR: RALPH AND ELIZABETH BONANZA

TBD JEANLEA PLACE.
COLUMBIA - FL. 32038

OFFICE: GAINESVILLE

SOLD BY: A. LOCAY

JOB# 59-20-042

2x6 EXTERIOR WALLS UNLESS OTHERWISE NOTED

FOUNDATION TYPE: MONOSLAB

DRAWN BY: AP

CHECKED BY: B. TOOMBS

PRINT DATE: 11/6/2020 9:06:34 AM

PROPERTY OF: AMERICA'S HOME PLACE

©COPYRIGHT - 2018

SHEET NUMBER: E-3

ROOF OVERVIEW

TO REPORT COPYRIGHT VIOLATIONS CALL (770)532-1128 THE USE OF THIS PLAN BY ANYONE OTHER THAN AN AGENT OF "AMERICA'S HOME PLACE, INC." IS IN VIOLATION OF THE FEDERAL COPYRIGHT VIOLATION ACT. $100 REWARD FOR RECOVERING AN ACTUAL COPYRIGHT INFRINGEMENT.
©COPYRIGHT-ALL RIGHTS RESERVED NOTE:VIOLATORS OF THE COPYRIGHT WILL BE PROSECUTED TO THE FULLEST EXTENT OF THE LAW. THIS WORK IS THE INTELLECTUAL PROPERTY OF AMERICA'S HOME PLACE AND SHALL NOT BE REPRODUCED WITHOUT PERMISSION.

PAPER SIZE: 11" x 17" SCALE: 1/8" = 1'-0"

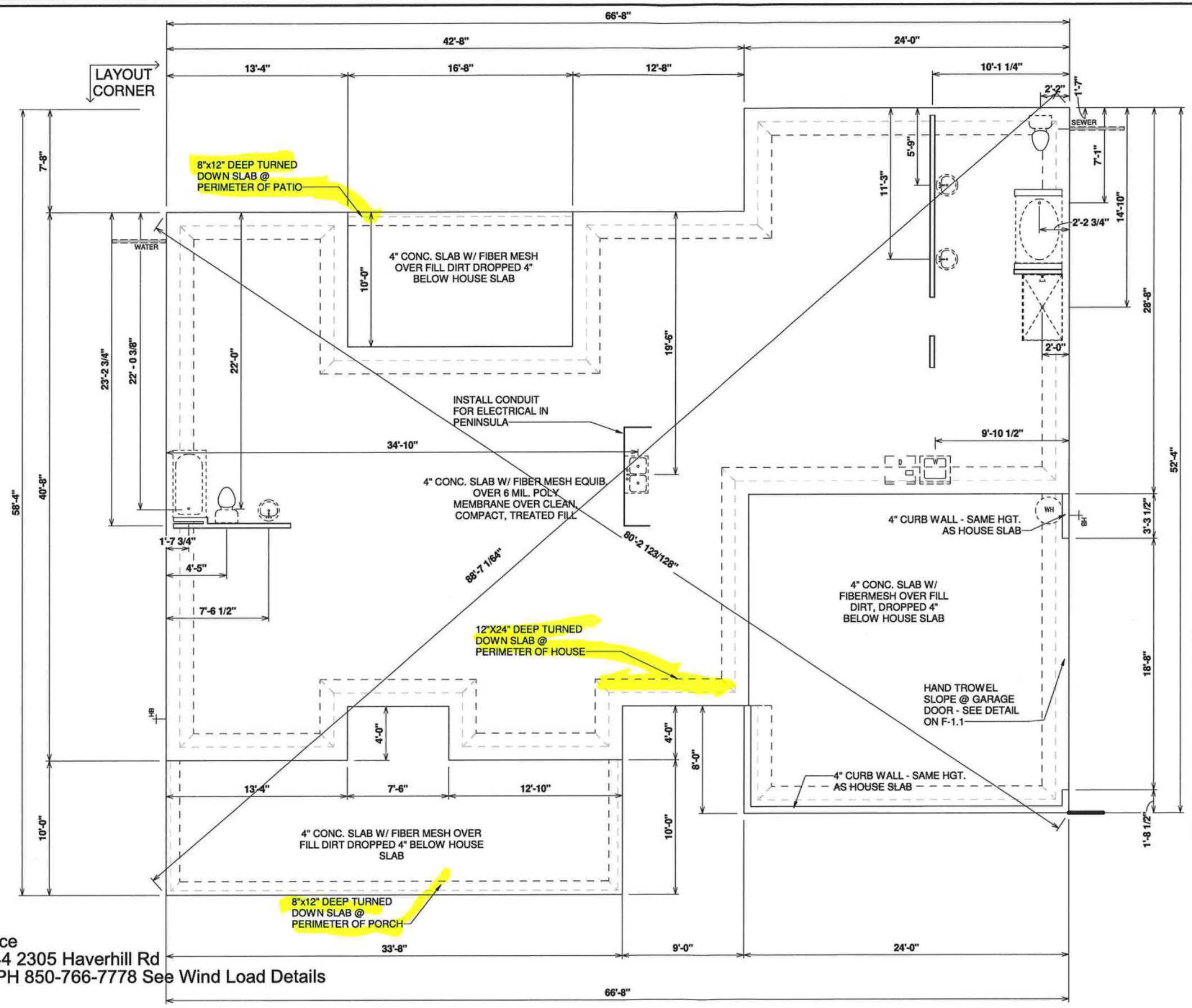

Reviewed for Compliance
James Zaleski PE 51544 2305 Haverhill Rd
Tallahassee, Fl 32312 PH 850-766-7778 See Wind Load Details

1 Foundation Plan
1/8" = 1'-0"

FOUNDATION FOR SUITABLE SOILS - IF BUILDER FINDS ADVERSE SOILS NOTIFY ENGINEER

JAMES ZALESKI
Digitally signed by JAMES ZALESKI
Date: 2020.11.06 12:18:33 -05'00'

JAMES A. ZALESKI LICENSE No. 51544 STATE OF FLORIDA PROFESSIONAL ENGINEER

OPT. PAPER SIZE: for 1/4" =1'-0" on 24"x36" PAPER SIZE ENLARGE PRINTS TO 200%

FINAL CONSTRUCTION PLANS

Revision Schedule		
Revision Number	Revision Description	Revision Date
	PRELIMINARY	9/23/20

AREAS:	
FIRST FLOOR HEATED	2,198 SF
GARAGE	560 SF
FRONT PORCH	367 SF
REAR PORCH	167 SF
TOTAL UNDER ROOF	3,292 SF

THE: BERGLUND M. FRMHOUSE
FOR: RALPH AND ELIZABETH BONANZA
TBD JEANLEA PLACE. COLUMBIA - FL. 32038
OFFICE: GAINESVILLE
SOLD BY: A. LOCAY

JOB#: 59-20-042
2x6 EXTERIOR WALLS UNLESS OTHERWISE NOTED
FOUNDATION TYPE: MONOSLAB

DRAWN BY: AP
CHECKED BY: B. TOOMBS
PRINT DATE: 11/6/2020 9:06:34 AM

PROPERTY OF: AMERICA'S HOME PLACE
©COPYRIGHT - 2018

SHEET NUMBER: F-1
FOUNDATION

TO REPORT COPYRIGHT VIOLATIONS CALL (770)532-1128 THE USE OF THIS PLAN BY ANYONE OTHER THAN AN AGENT OF "AMERICA'S HOME PLACE, INC." IS IN VIOLATION OF THE FEDERAL COPYRIGHT VIOLATION ACT. $100 REWARD FOR RECOVERING AN ACTUAL COPYRIGHT INFRINGEMENT.
©COPYRIGHT-ALL RIGHTS RESERVED NOTE:VIOLATORS OF THE COPYRIGHT WILL BE PROSECUTED TO THE FULLEST EXTENT OF THE LAW. THIS WORK IS THE INTELLECTUAL PROPERTY OF AMERICA'S HOME PLACE AND SHALL NOT BE REPRODUCED WITHOUT PERMISSION.

PAPER SIZE: 11" x 17" SCALE: 1/8" = 1'-0"

SOIL:

SATISFACTORY FILL MATERIAL SHALL BE FREE OF VEGETATION AND ORGANIC MATTER, WITH NOT MORE THAN 20 PERCENT BY WEIGHT PASSING THE 200 SIEVE. FILL LIFTS SHALL BE 12 INCHES MAXIMUM.

ALL TOP SOIL CONTAINING UNSUITABLE MATERIAL SHALL BE REMOVED PRIOR TO THE PLACEMENT OF CLEAN FILL MATERIAL.

ALL CLEAN FILL SHALL BE PLACED ON TOP OF UNDISTURBED SOIL, FREE OF DELETERIOUS AND ORGANIC MATERIALS, AS NOTED ABOVE.

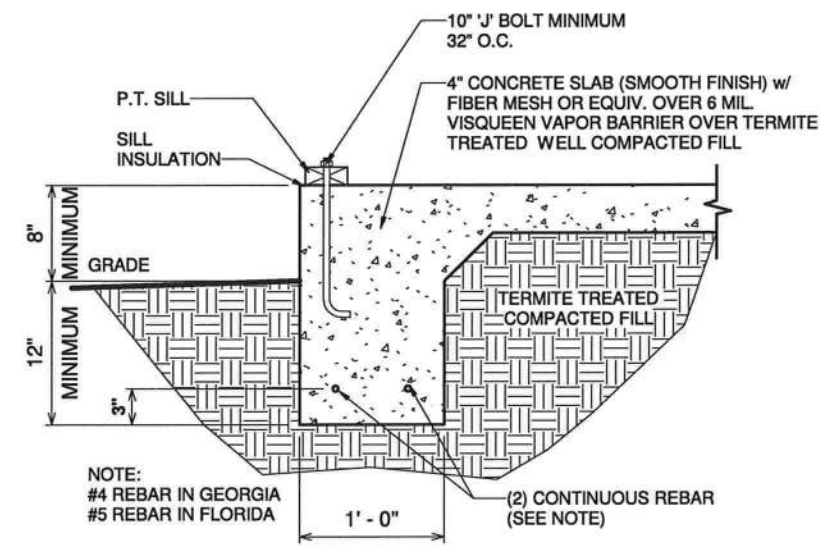

1 1 STORY MONOSLAB DETAIL
3/4" = 1'-0"

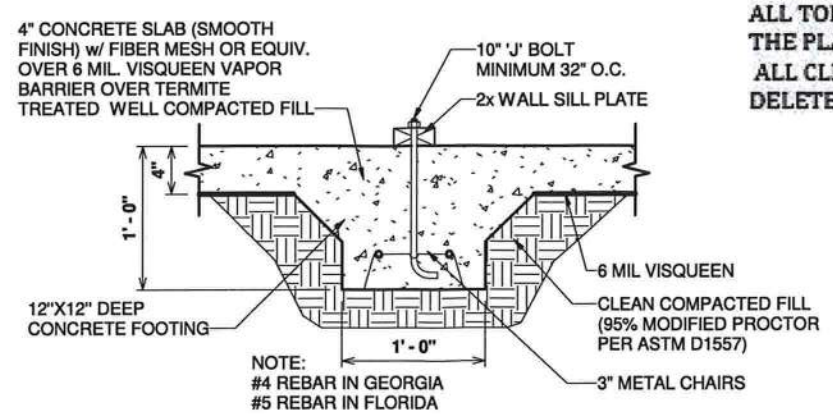

2 INTERIOR BEARING WALL FOOTER DETAIL
3/4" = 1'-0"

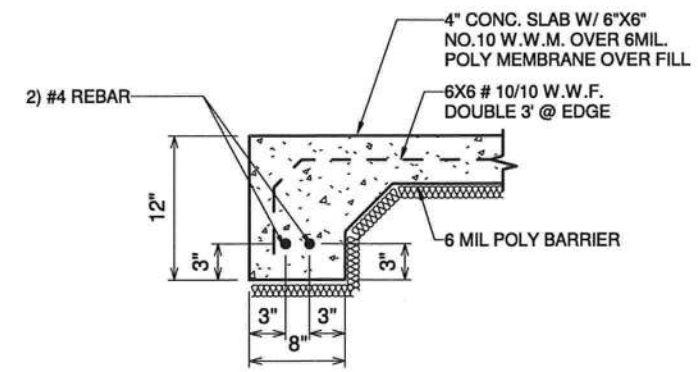

5 53.1-EDGE OF TURNED DOWN SLAB
3/4" = 1'-0"

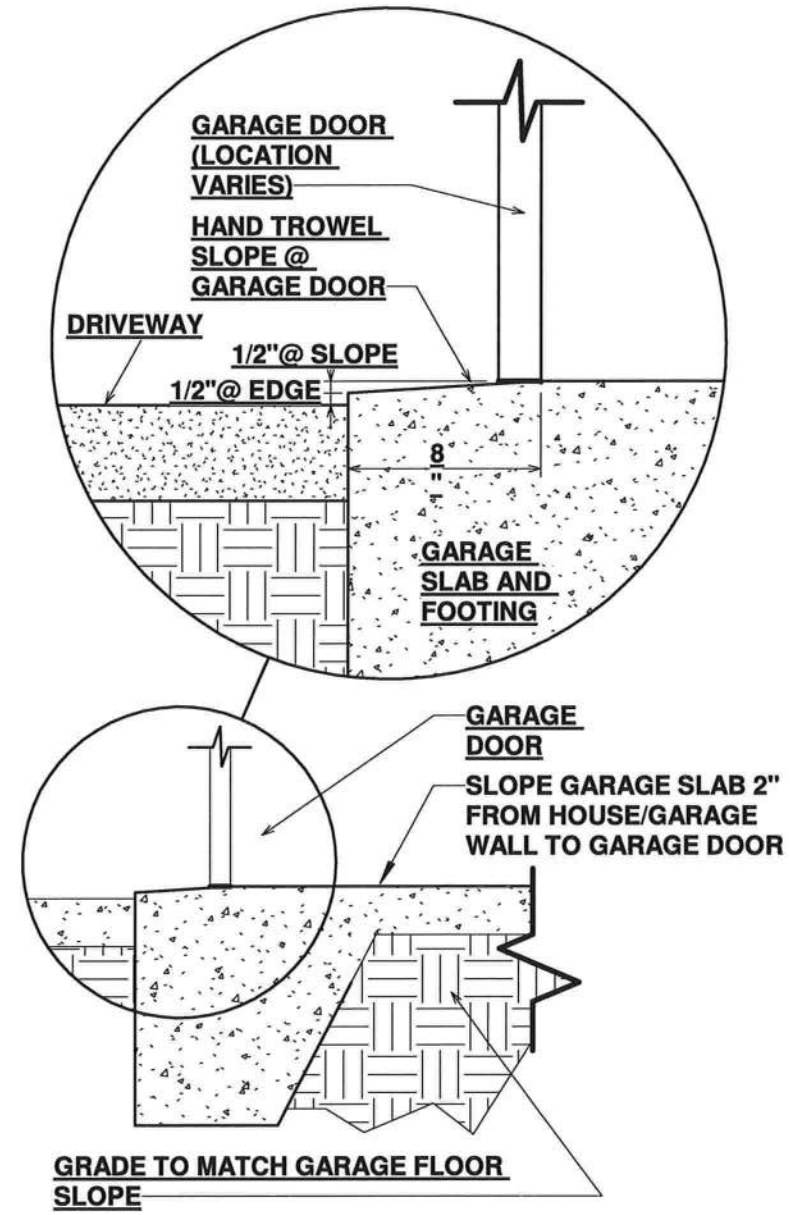

4 GARAGE DOOR SLOPE DETAIL
3/4" = 1'-0"

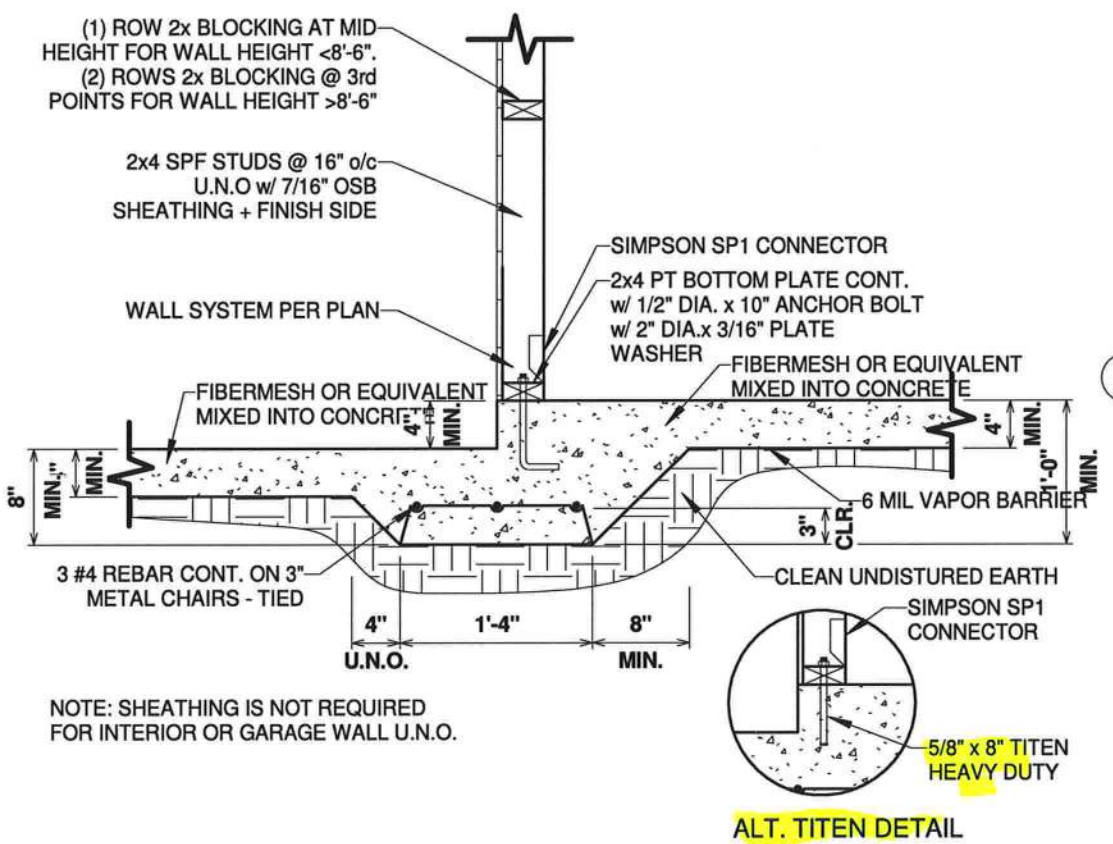

3 Section - Bearing Wall at Step - Monoslab - FL
3/4" = 1'-0"

JAMES ZALESKI Digitally signed by JAMES ZALESKI Date: 2020.11.06 12:18:12 -05'00'

JAMES A. ZALESKI LICENSE No. 51544 STATE OF FLORIDA PROFESSIONAL ENGINEER

Reviewed for Compliance
~~James Zaleski PE 51544~~ 2305 Haverhill Rd
Tallahassee, Fl 32312 PH 850-766-7778 See Wind Load Details

OPT. PAPER SIZE: for 1/4" =1'-0" on 24"x36" PAPER SIZE ENLARGE PRINTS TO 200%

FINAL CONSTRUCTION PLANS

Revision Schedule

Revision Number	Revision Description	Revision Date
	PRELIMINARY	9/23/20

AREAS:

FIRST FLOOR HEATED	2,198 SF
GARAGE	560 SF
FRONT PORCH	367 SF
REAR PORCH	167 SF
TOTAL UNDER ROOF	3,292 SF

THE: BERGLUND M. FRMHOUSE

FOR: RALPH AND ELIZABETH BONANZA

TBD JEANLEA PLACE.
COLUMBIA - FL. 32038

OFFICE: GAINESVILLE

SOLD BY: A. LOCAY

JOB#: 59-20-042

2x6 EXTERIOR WALLS UNLESS OTHERWISE NOTED

FOUNDATION TYPE: MONOSLAB

DRAWN BY: AP

CHECKED BY: B. TOOMBS

PRINT DATE: 11/6/2020 9:06:35 AM

PROPERTY OF: AMERICA'S HOME PLACE

©COPYRIGHT - 2018

SHEET NUMBER: F-1.1

FOUNDATION DETAILS

TO REPORT COPYRIGHT VIOLATIONS CALL (770)532-1128 THE USE OF THIS PLAN BY ANYONE OTHER THAN AN AGENT OF "AMERICA'S HOME PLACE, INC." IS IN VIOLATION OF THE FEDERAL COPYRIGHT VIOLATION ACT. $100 REWARD FOR RECOVERING AN ACTUAL COPYRIGHT INFRINGEMENT.
©COPYRIGHT-ALL RIGHTS RESERVED NOTE:VIOLATORS OF THE COPYRIGHT WILL BE PROSECUTED TO THE FULLEST EXTENT OF THE LAW. THIS WORK IS THE INTELLECTUAL PROPERTY OF AMERICA'S HOME PLACE AND SHALL NOT BE REPRODUCED WITHOUT PERMISSION.

PAPER SIZE: 11" x 17" SCALE: 3/4" = 1'-0"

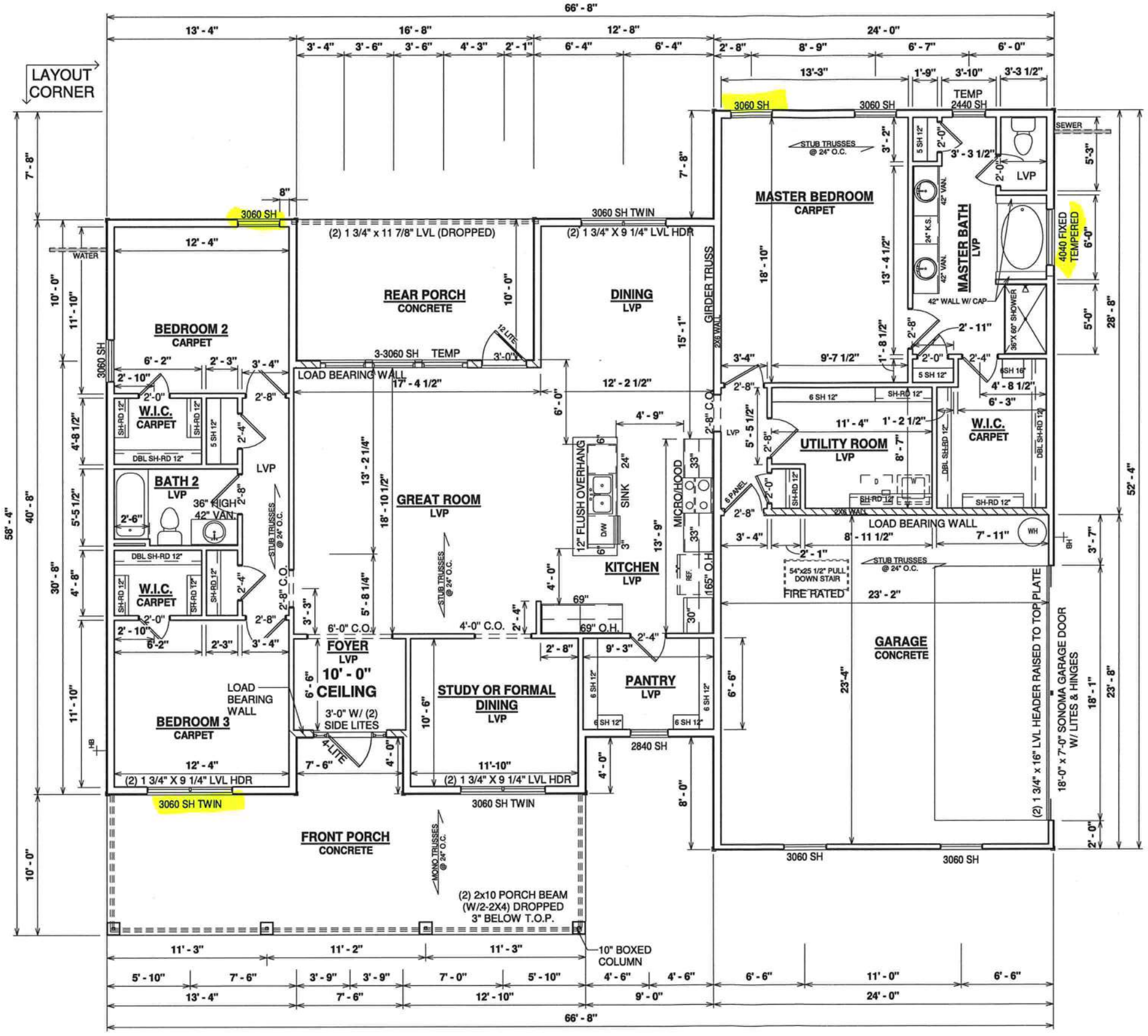

1 FIRST FLOOR PLAN- CONSTRUCTION
1/8" = 1'-0"

Reviewed for Compliance
James Zaleski PE 51544 2305 Haverhill Rd
Tallahassee, Fl 32312 PH 850-766-7778 See Wind Load Details

GENERAL NOTES

- MIN 9'-1 1/8" CEILING HEIGHT ON FIRST FLOOR
- ALL LOAD BEARING WALLS & EXT. OPENINGS TO HAVE (2) 2X10 HEADERS UNLESS OTHERWISE NOTED
- STANDARD FIRST FLOOR WINDOW HEADERS TO BE FRAMED DOWN 2'-2" FROM T.O.P. EXCEPT AS NOTED
- 7/16" O.S.B. AND HOUSEWRAP REQUIRED
- DIMENSIONS ARE TO SHEATHING EXTERIOR; SUBTRACT 1/2" FROM DIMENSIONS FOR EXTERIOR WINDOW AND DOOR FRAMING LOCATION IF OPENINGS ARE FRAMED BEFORE SHEATHING INSTALLATION
- ALL INTERIOR DOORS ARE EITHER CENTERED ON WALLS OR R.O. STARTED MIN OF4" FROM ADJOINING WALL UNLESS OTHERWISE DIMENSIONED
- NUMBER OF STAIR TREADS & RISERS MAY VARY AS A RESULT OF LOCAL BUILDING CODES, STANDARDS AND FINAL GRADE
- CLOSET SHELF HEIGHT OFF FLOOR:
  SINGLE-68"
  DOUBLE 42" & 84"
- ALL PLUMBING FIXTURES SHOWN ARE A REPRESENTATION OF SIZE AN LOCATION ONLY. ACTUAL STYLE AND BRAND OF FIXTURES MAY VARY PER OFFICE LOCATION
- ALL TUBS/SHOWERS ARE TO HAVE NAILERS AT FLANGE
- INSTALL A 24" WIDE WALKWAY FROM ATTIC ACCESS TO FURNACE PLATFORM
- FRAMER TO INSTALL DRYWALL CLIPS IN LIEU OF DEADWOOD ON ALL WALLS
- **PORCH, STOOP, & DECK HARDRAILS NOT INCLUDED W/ SLAB FOUNDATION**
- **RAILINGS ARE A FORCED OPTION WHEN PORCH IS OVER 30" HIGH**

JAMES ZALESKI

Digitally signed by JAMES ZALESKI
Date: 2020.11.06 12:17:43 -05'00'

JAMES A. ZALESKI
LICENSE
No. 51544
STATE OF FLORIDA
PROFESSIONAL ENGINEER

OPT. PAPER SIZE: for 1/4" =1'-0" on 24"x36" PAPER SIZE ENLARGE PRINTS TO 200%

FINAL CONSTRUCTION PLANS

19,737 CUBIC FEET

AREAS:

FIRST FLOOR HEATED	2,198 SF
GARAGE	560 SF
FRONT PORCH	367 SF
REAR PORCH	167 SF
TOTAL UNDER ROOF	3,292 SF

Revision Schedule

Revision Number	Revision Description	Revision Date
	PRELIMINARY	9/23/20

THE: BERGLUND M. FRMHOUSE
FOR: RALPH AND ELIZABETH BONANZA
TBD JEANLEA PLACE.
COLUMBIA - FL. 32038
OFFICE: GAINESVILLE
SOLD BY: A. LOCAY

JOB#: 59-20-042
2x6 EXTERIOR WALLS UNLESS OTHERWISE NOTED
FOUNDATION TYPE: MONOSLAB

DRAWN BY: AP
CHECKED BY: B. TOOMBS
PRINT DATE: 11/6/2020 9:06:33 AM

PROPERTY OF: AMERICA'S HOME PLACE

©COPYRIGHT - 2018

SHEET NUMBER: F-2

FIRST FLOOR PLAN

TO REPORT COPYRIGHT VIOLATIONS CALL (770)532-1128 THE USE OF THIS PLAN BY ANYONE OTHER THAN AN AGENT OF "AMERICA'S HOME PLACE, INC." IS IN VIOLATION OF THE FEDERAL COPYRIGHT VIOLATION ACT. $100 REWARD FOR RECOVERING AN ACTUAL COPYRIGHT INFRINGEMENT.
©COPYRIGHT-ALL RIGHTS RESERVED NOTE:VIOLATORS OF THE COPYRIGHT WILL BE PROSECUTED TO THE FULLEST EXTENT OF THE LAW. THIS WORK IS THE INTELLECTUAL PROPERTY OF AMERICA'S HOME PLACE AND SHALL NOT BE REPRODUCED WITHOUT PERMISSION.

PAPER SIZE: 11" x 17" SCALE: 1/8" = 1'-0"

ELECTRICAL LEGEND

LIGHTING FIXTURES	
Ceiling Fan	
Ceiling Fan w/ Light	
Ceiling Mounted Light	
Recessed Ceiling Light	
Pendent Ceiling Light	
Fluorescent Ceiling Light	
Ceiling Exhaust Fan/Light Combo	
Emergency Exit Light	
Junction Box for Future Fixture	
Fluorescent Wall Mounted Light	
Wall Mounted Vanity 3 Light	
Wall Mounted Vanity 4 Light	
Wall Mounted Interior Sconce Light	
Wall Mounted Exterior Coach Light	
Exterior Flood Light	
ELECTRICAL FIXTURES	
Duplex Outlet	
Duplex Outlet - GFI	GFI
Duplex Outlet - Water Proof GFI	WP GFI
Duplex Outlet - 220v	220
Duplex Outlet - Ceiling Mounted	
Duplex Outlet - Floor Mounted	
4-plex Outlet	
4-plex Outlet - Floor Mounted	
Outlet, Light and Switch (Attic/Crawl)	
2-Way Switch	
3-Way Switch	3
4-Way Switch	4
Dimmer Switch	D
Rocker Switch	R
Thermostat	T
Door Bell	B
Door Bell Chime	CHIME
Telephone Jack	T
Television / Cable Jack	TV
Telephone / Data Jack	TD

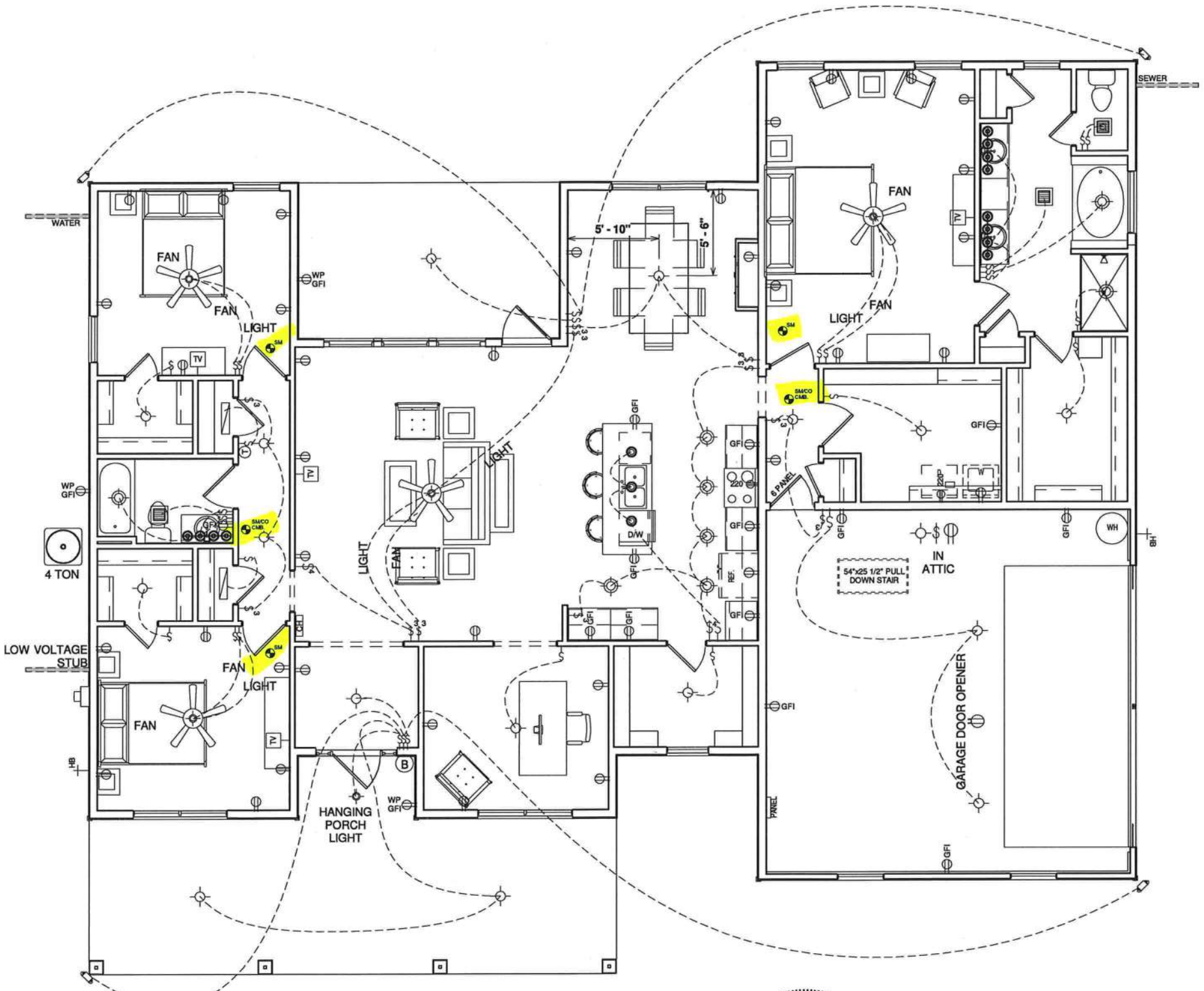

1 ELECTRICAL PLAN
1/8" = 1'-0"

HVAC SYMBOLS (TYPICAL)

SC	SUPPLY - CEILING
	SUPPLY - FLOOR
S/A	SUPPLY - WALL
	RETURN AIR - CEILING
	RETURN AIR - CEILING
	RETURN AIR - FLOOR
R/A	RETURN AIR - WALL

HVAC NOTES:

- FURNACE NOT LOCATED ON HEATED AREA TO BE AS CENTRALLY LOCATED AS POSSIBLE. IN ACCORDANCE WITH ALL APPLICABLE CODES
- BUILDER & HVAC CONTRACTOR RESERVE THE RIGHT TO LOCATE SUPPLY VENTS OR LINES
- RETURN AIR REGISTERS TO BE AS CLOSE TO FURNACE UNIT & CENTRALLY LOCATED AS POSSIBLE
- OUTSIDE COMPRESSOR UNIT TO BE LOCATED AS CLOSE TO INTERIOR AIR HANDLER AS POSSIBLE
- OUTSIDE COMPRESSOR UNIT TO BE LOCATED 10' AWAY MIN. FROM DRYER VENT

ELECTRICAL NOTES:

- BRANCH CIRCUITS THAT SUPPLY 125V, SINGLE PHASE, 15 & 20 AMP RECEPTACLE OUTLETS IN BEDROOMS SHALL BE PROTECTED BY ARC-FAULT CIRCUIT INTERRUPTER. ART. 210-12(b) 1999 NEC
- CONFORM ELECTRICAL WIRING & COMPONENTS TO CURRENT NEC PROVISIONS OF 1 & 2 FAMILY DWELLINGS AS REQUIRED BY CODE

- OUTLET LOCATIONS ARE REPRESENTATION ONLY
- ACTUAL OUTLET LOCATIONS MAY VARY PER LOCAL CODE

JAMES A. ZALESKI LICENSE No. 51544 STATE OF FLORIDA PROFESSIONAL ENGINEER

JAMES ZALESKI

Digitally signed by JAMES ZALESKI
Date: 2020.11.06 12:17:22 -05'00'

Reviewed for Compliance
James Zaleski PE 51544 2305 Haverhill Rd
Tallahassee, Fl 32312 PH 850-766-7778 See Wind Load Details

OPT. PAPER SIZE: for 1/4" =1'-0" on 24"x36" PAPER SIZE ENLARGE PRINTS TO 200%

FINAL CONSTRUCTION PLANS

Revision Schedule		
Revision Number	Revision Description	Revision Date
	PRELIMINARY	9/23/20

AREAS:	
FIRST FLOOR HEATED	2,198 SF
GARAGE	560 SF
FRONT PORCH	367 SF
REAR PORCH	167 SF
TOTAL UNDER ROOF	3,292 SF

THE: BERGLUND M. FRMHOUSE
FOR: RALPH AND ELIZABETH BONANZA
TBD JEANLEA PLACE. COLUMBIA - FL. 32038
OFFICE: GAINESVILLE
SOLD BY: A. LOCAY

JOB#: 59-20-042
2x6 EXTERIOR WALLS UNLESS OTHERWISE NOTED
FOUNDATION TYPE: MONOSLAB

DRAWN BY: AP
CHECKED BY: B. TOOMBS
PRINT DATE: 11/6/2020 9:06:35 AM

PROPERTY OF: AMERICA'S HOME PLACE
©COPYRIGHT - 2018

SHEET NUMBER: H-1

FIRST FLOOR ELEC & HVAC

TO REPORT COPYRIGHT VIOLATIONS CALL (770)532-1128 THE USE OF THIS PLAN BY ANYONE OTHER THAN AN AGENT OF "AMERICA'S HOME PLACE, INC." IS IN VIOLATION OF THE FEDERAL COPYRIGHT VIOLATION ACT. $100 REWARD FOR RECOVERING AN ACTUAL COPYRIGHT INFRINGEMENT.
©COPYRIGHT-ALL RIGHTS RESERVED NOTE:VIOLATORS OF THE COPYRIGHT WILL BE PROSECUTED TO THE FULLEST EXTENT OF THE LAW. THIS WORK IS THE INTELLECTUAL PROPERTY OF AMERICA'S HOME PLACE AND SHALL NOT BE REPRODUCED WITHOUT PERMISSION.

PAPER SIZE: 11" x 17" SCALE: 1/8" = 1'-0"

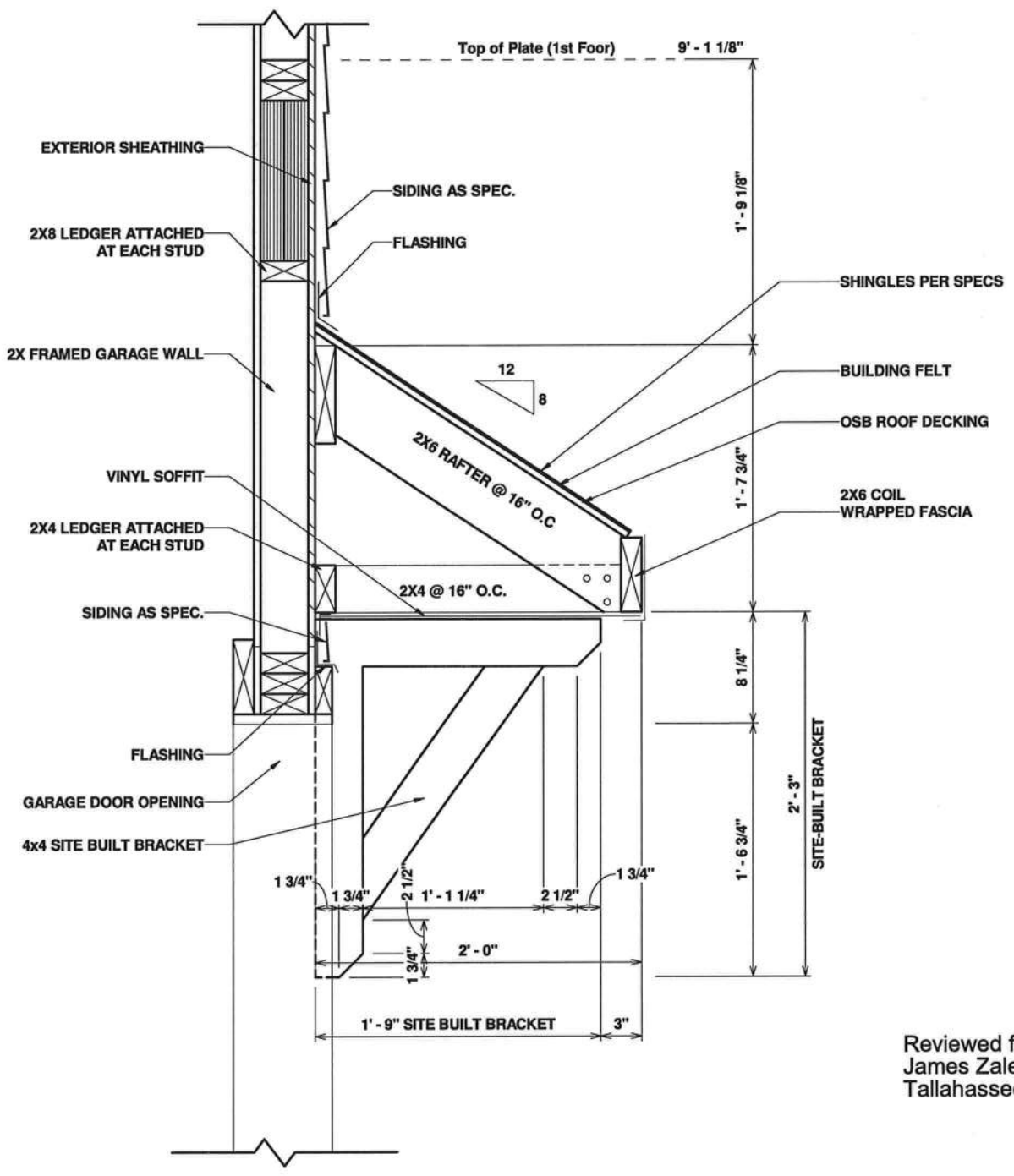

450.4 GARAGE DOOR EYEBROW DETAIL - 8/12 PITCH (Flat)

1 1" = 1'-0"

JAMES ZALESKI

Digitally signed by JAMES ZALESKI
Date: 2020.11.06 12:15:34 -05'00'

Reviewed for Compliance
James Zaleski PE 51544 2305 Haverhill Rd
Tallahassee, Fl 32312 PH 850-766-7778 See Wind Load Details

JAMES A. ZALESKI
LICENSE
No. 51544
STATE OF FLORIDA
PROFESSIONAL ENGINEER

OPT. PAPER SIZE: for 1/4" =1'-0" on 24"x36" PAPER SIZE ENLARGE PRINTS TO 200%

FINAL CONSTRUCTION PLANS

Revision Schedule

Revision Number	Revision Description	Revision Date
	PRELIMINARY	9/23/20

AREAS:

FIRST FLOOR HEATED	2,198 SF
GARAGE	560 SF
FRONT PORCH	367 SF
REAR PORCH	167 SF
TOTAL UNDER ROOF	3,292 SF

THE: BERGLUND M. FRMHOUSE

FOR: RALPH AND ELIZABETH BONANZA

TBD JEANLEA PLACE.
COLUMBIA - FL. 32038

OFFICE: GAINESVILLE

SOLD BY: A. LOCAY

JOB#: 59-20-042

2x6 EXTERIOR WALLS UNLESS OTHERWISE NOTED

FOUNDATION TYPE: MONOSLAB

DRAWN BY: AP

CHECKED BY: B. TOOMBS

PRINT DATE: 11/6/2020 9:06:38 AM

PROPERTY OF: AMERICA'S HOME PLACE

©COPYRIGHT - 2018

SHEET NUMBER: S-1

DETAILS & SECTIONS

PAPER SIZE: 11" x 17"

SCALE: 1" = 1'-0"

TO REPORT COPYRIGHT VIOLATIONS CALL (770)532-1128 THE USE OF THIS PLAN BY ANYONE OTHER THAN AN AGENT OF "AMERICA'S HOME PLACE, INC." IS IN VIOLATION OF THE FEDERAL COPYRIGHT VIOLATION ACT. $100 REWARD FOR RECOVERING AN ACTUAL COPYRIGHT INFRINGEMENT.
©COPYRIGHT-ALL RIGHTS RESERVED NOTE:VIOLATORS OF THE COPYRIGHT WILL BE PROSECUTED TO THE FULLEST EXTENT OF THE LAW. THIS WORK IS THE INTELLECTUAL PROPERTY OF AMERICA'S HOME PLACE AND SHALL NOT BE REPRODUCED WITHOUT PERMISSION.

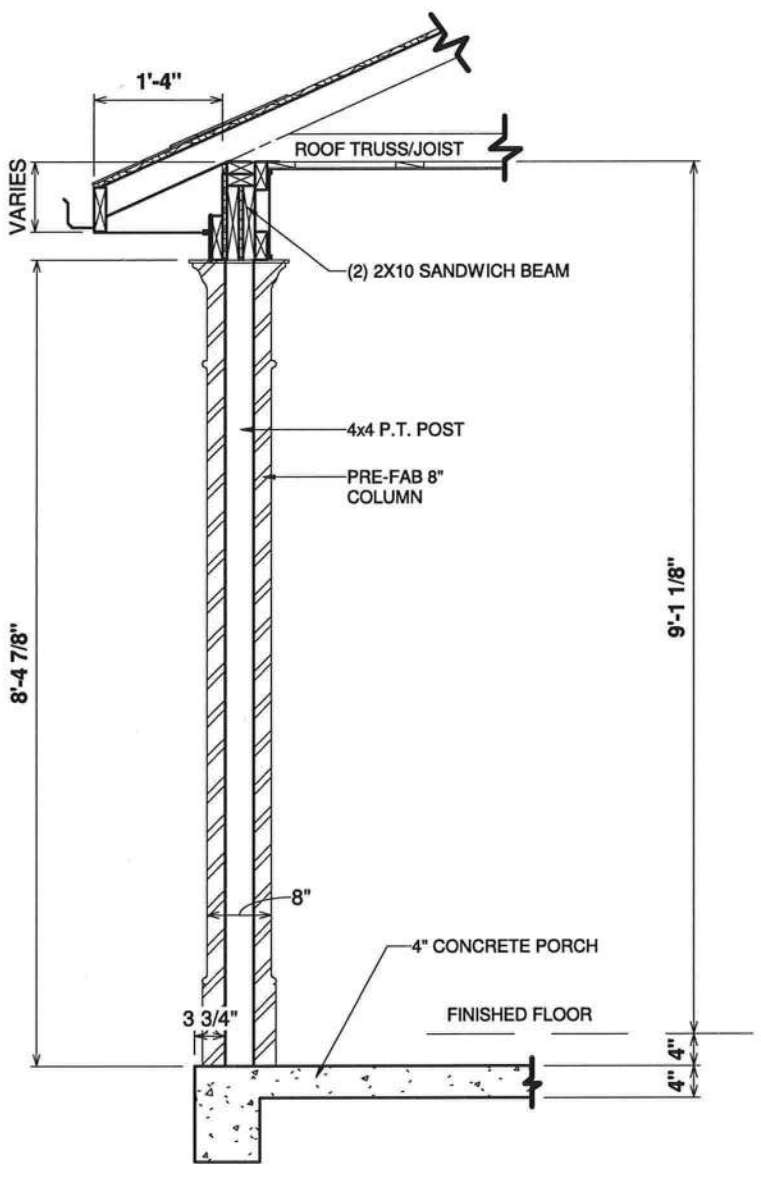

1 820.1 8" PORCH COLUMN - On Concrete
1/2" = 1'-0"

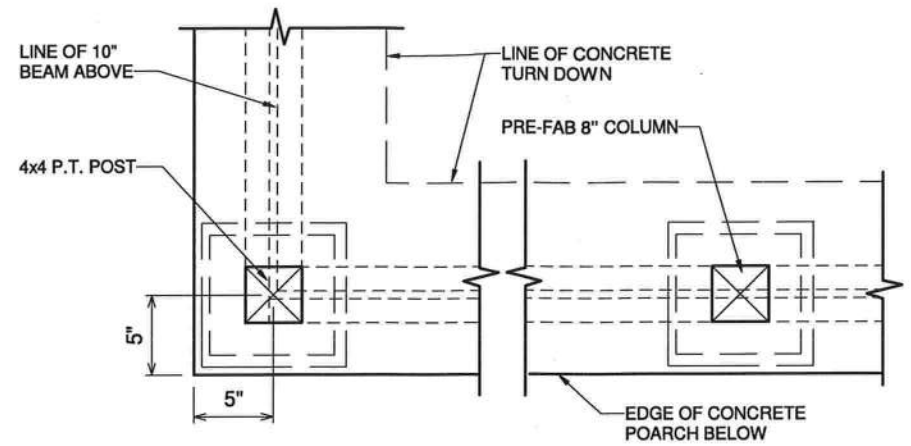

2 820.2 PORCH 8" COLUMN FRAMING ON SLAB
1" = 1'-0"

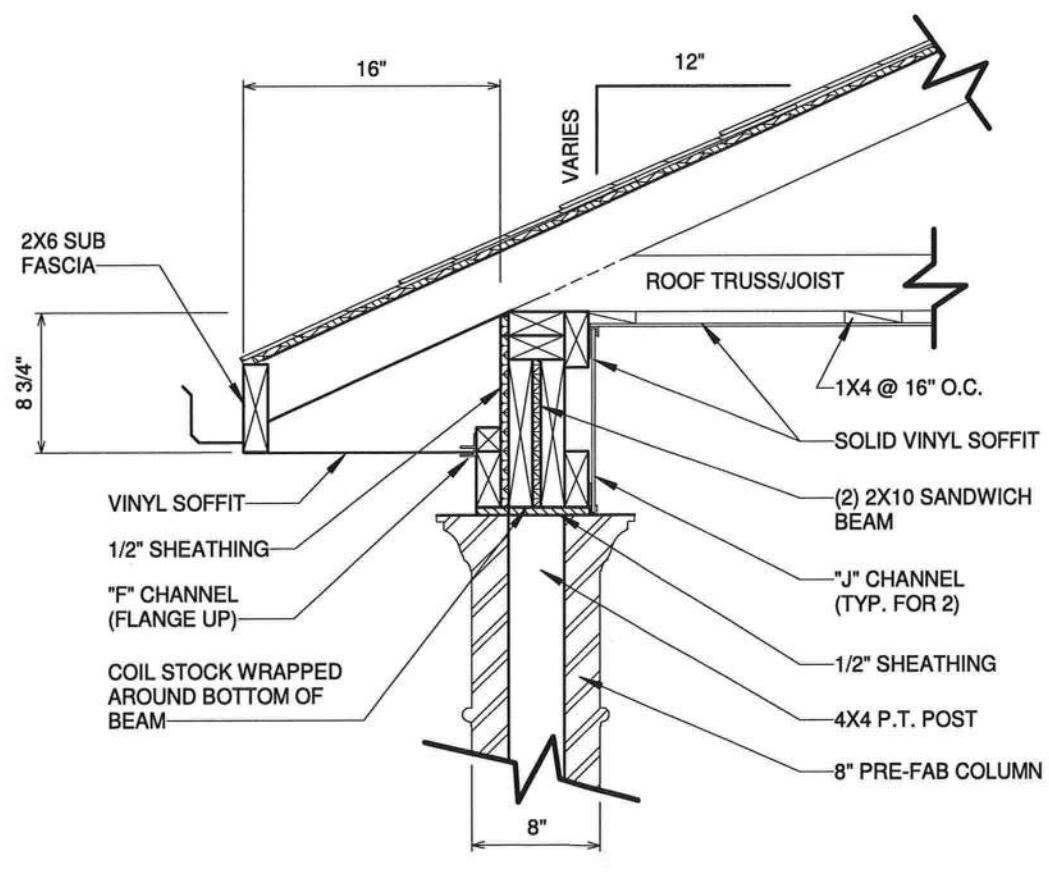

3 PORCH TRUSS EVE SOFFIT
1" = 1'-0"

Reviewed for Compliance
James Zaleski PE 51544 2305 Haverhill Rd
Tallahassee, Fl 32312 PH 850-766-7778 See Wind Load Details

JAMES ZALESKI

Digitally signed by JAMES ZALESKI
Date: 2020.11.06 12:14:58 -05'00'

JAMES A. ZALESKI
LICENSE
No. 51544
STATE OF FLORIDA
PROFESSIONAL ENGINEER

OPT. PAPER SIZE: for 1/4" =1'-0" on 24"x36" PAPER SIZE ENLARGE PRINTS TO 200%

FINAL CONSTRUCTION PLANS

Revision Schedule

Revision Number	Revision Description	Revision Date
	PRELIMINARY	9/23/20

AREAS:

FIRST FLOOR HEATED	2,198 SF
GARAGE	560 SF
FRONT PORCH	367 SF
REAR PORCH	167 SF
TOTAL UNDER ROOF	3,292 SF

THE: BERGLUND M. FRMHOUSE

FOR: RALPH AND ELIZABETH BONANZA

TBD JEANLEA PLACE.
COLUMBIA - FL. 32038

OFFICE: GAINESVILLE

SOLD BY: A. LOCAY

JOB# 59-20-042

2x6 EXTERIOR WALLS UNLESS OTHERWISE NOTED

FOUNDATION TYPE: MONOSLAB

DRAWN BY: AP

CHECKED BY: B. TOOMBS

PRINT DATE: 11/6/2020 9:06:36 AM

PROPERTY OF: AMERICA'S HOME PLACE

©COPYRIGHT - 2018

SHEET NUMBER: S-2

DETAILS AND SECTIONS

TO REPORT COPYRIGHT VIOLATIONS CALL (770)532-1128 THE USE OF THIS PLAN BY ANYONE OTHER THAN AN AGENT OF "AMERICA'S HOME PLACE, INC." IS IN VIOLATION OF THE FEDERAL COPYRIGHT VIOLATION ACT. $100 REWARD FOR RECOVERING AN ACTUAL COPYRIGHT INFRINGEMENT.
©COPYRIGHT-ALL RIGHTS RESERVED NOTE:VIOLATORS OF THE COPYRIGHT WILL BE PROSECUTED TO THE FULLEST EXTENT OF THE LAW. THIS WORK IS THE INTELLECTUAL PROPERTY OF AMERICA'S HOME PLACE AND SHALL NOT BE REPRODUCED WITHOUT PERMISSION.

PAPER SIZE: 11" x 17"

SCALE: As indicated

Reviewed for Compliance
James Zaleski PE 51544 2305 Haverhill Rd
Tallahassee, Fl 32312 PH 850-766-7778 See Wind Load Details

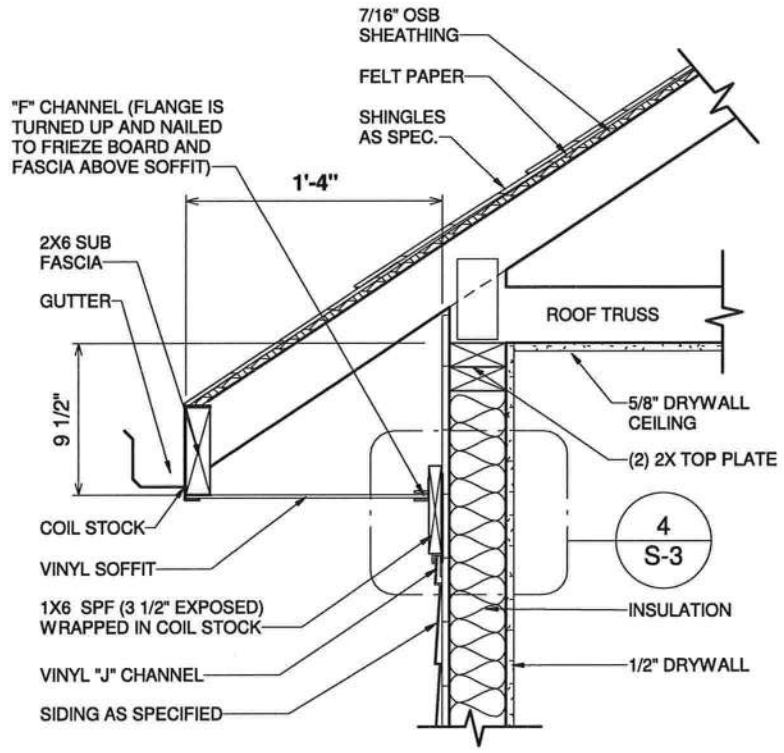

3 400.1 RAFTER TAIL AT SIDING WALL - TYPICAL2
1" = 1'-0"

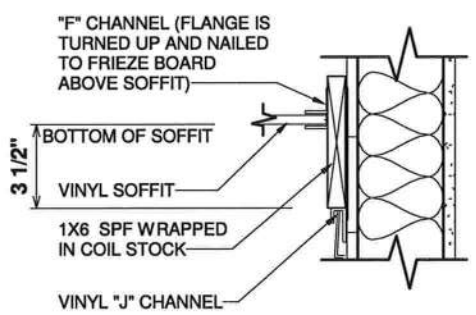

4 400.2 FRIEZE DETAIL AT SIDING
1 1/2" = 1'-0"

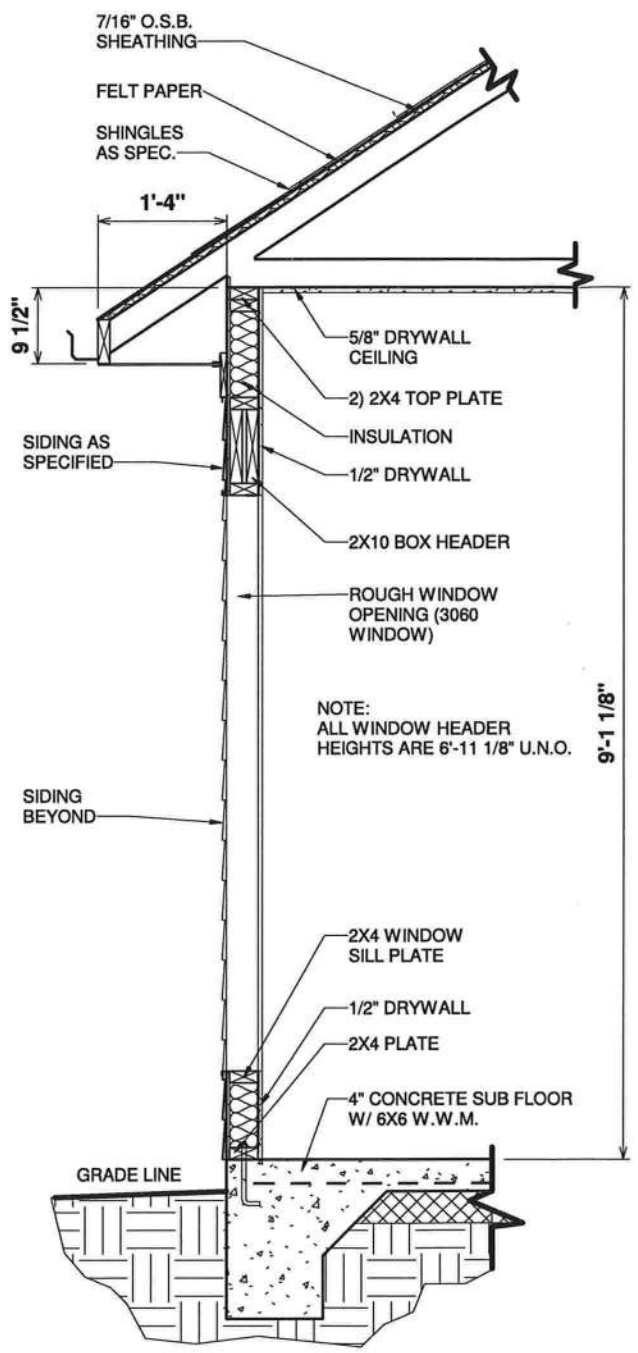

2 220.1.1 1 STORY WALL SECTION ON SLAB AT WINDOW
1/2" = 1'-0"

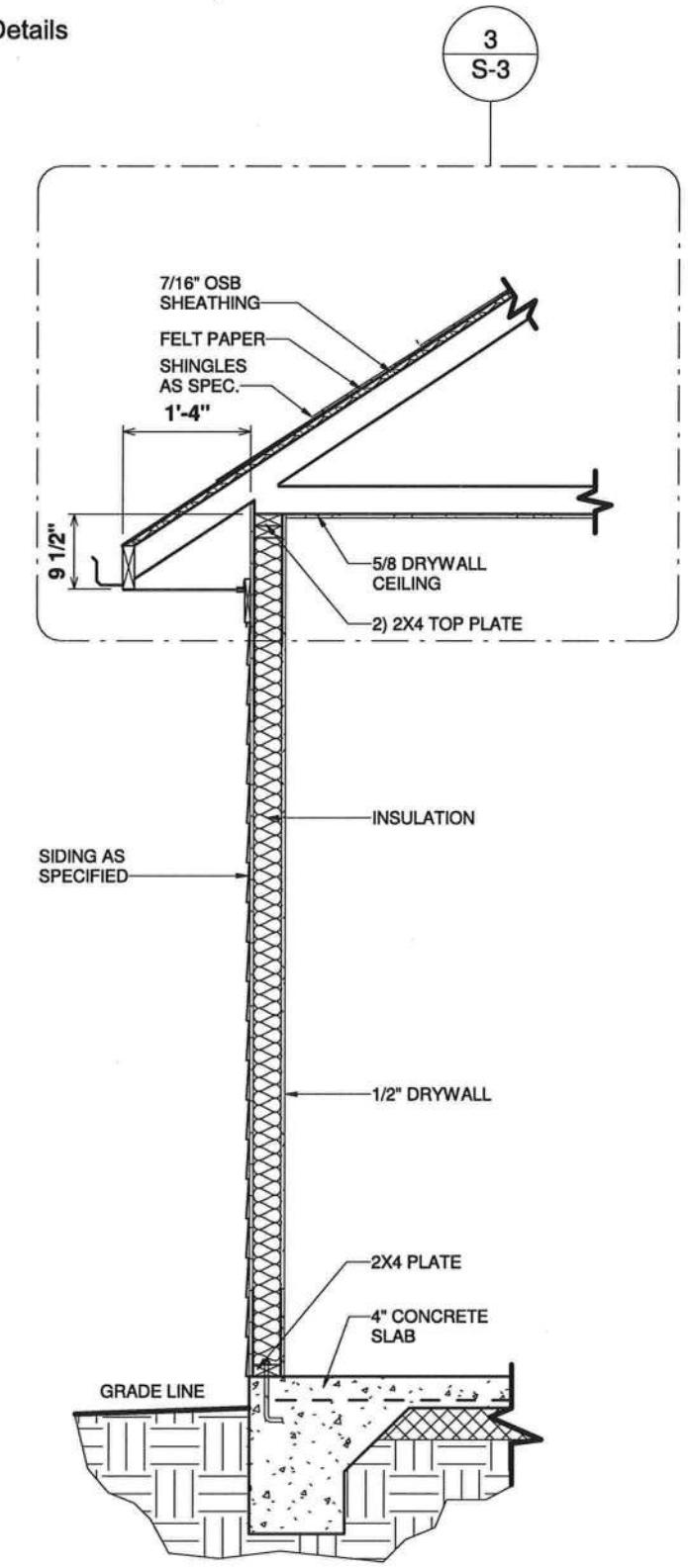

1 220.1 1 STORY WALL SECTION ON SLAB
1/2" = 1'-0"

JAMES ZALESKI
Digitally signed by JAMES ZALESKI
Date: 2020.11.06 12:14:12 -05'00'

JAMES A. ZALESKI LICENSE No. 51544 STATE OF FLORIDA PROFESSIONAL ENGINEER

OPT. PAPER SIZE: for 1/4" =1'-0" on 24"x36" PAPER SIZE ENLARGE PRINTS TO 200%

FINAL CONSTRUCTION PLANS

Revision Schedule		
Revision Number	Revision Description	Revision Date
	PRELIMINARY	9/23/20

AREAS:

FIRST FLOOR HEATED	2,198 SF
GARAGE	560 SF
FRONT PORCH	367 SF
REAR PORCH	167 SF
TOTAL UNDER ROOF	3,292 SF

THE: BERGLUND M. FRMHOUSE
FOR: RALPH AND ELIZABETH BONANZA
TBD JEANLEA PLACE.
COLUMBIA - FL. 32038
OFFICE: GAINESVILLE
SOLD BY: A. LOCAY

JOB# 59-20-042
2x6 EXTERIOR WALLS UNLESS OTHERWISE NOTED
FOUNDATION TYPE: MONOSLAB

DRAWN BY: AP
CHECKED BY: B. TOOMBS
PRINT DATE: 11/6/2020 9:06:36 AM

PROPERTY OF: AMERICA'S HOME PLACE
©COPYRIGHT - 2018

SHEET NUMBER: S-3
DETAILS AND SECTIONS

PAPER SIZE: 11" x 17" SCALE: As indicated

TO REPORT COPYRIGHT VIOLATIONS CALL (770)532-1128 THE USE OF THIS PLAN BY ANYONE OTHER THAN AN AGENT OF "AMERICA'S HOME PLACE, INC." IS IN VIOLATION OF THE FEDERAL COPYRIGHT VIOLATION ACT. $100 REWARD FOR RECOVERING AN ACTUAL COPYRIGHT INFRINGEMENT.
©COPYRIGHT-ALL RIGHTS RESERVED NOTE:VIOLATORS OF THE COPYRIGHT WILL BE PROSECUTED TO THE FULLEST EXTENT OF THE LAW. THIS WORK IS THE INTELLECTUAL PROPERTY OF AMERICA'S HOME PLACE AND SHALL NOT BE REPRODUCED WITHOUT PERMISSION.