Job	Truss	Truss Type	Qty	Ply	
55828	A1	Hip Girder	1	2	Job Reference (optional)

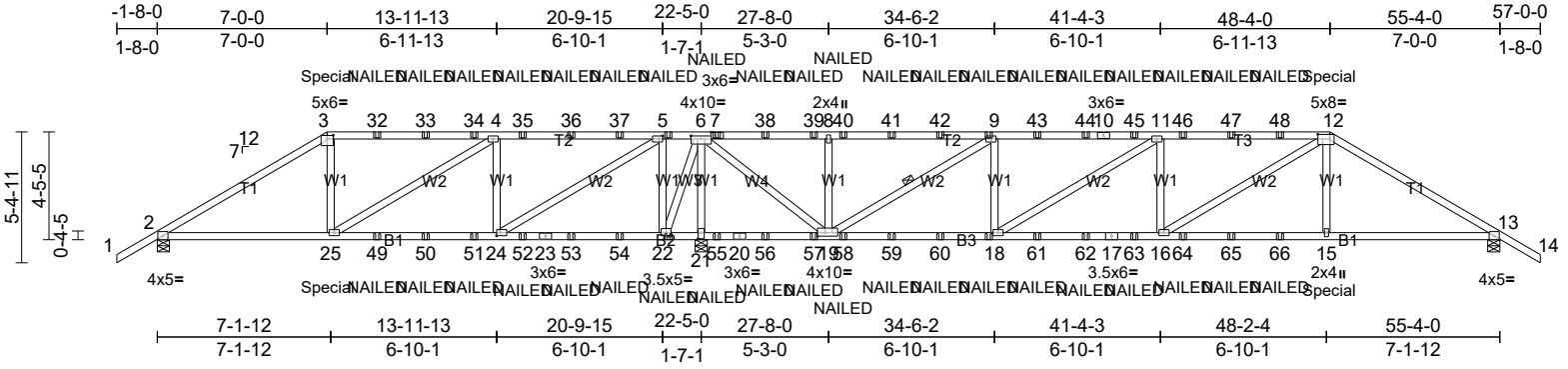

Scale = 1:95.3

Plate Offsets (X, Y): [3:0-3-0,0-1-12], [5:0-1-12,0-1-8], [6:0-5-0,0-1-8], [7:0-2-0,0-1-8], [12:0-6-0,0-2-4], [19:0-3-12,0-1-12], [21:0-3-0,0-1-8], [22:0-2-8,0-1-8], [24:0-1-12,0-1-8]

Loading	(psf)	Spacing	2-0-0	CSI		DEFL	in	(loc)	l/defl	L/d	PLATES	GRIP
TCLL (roof)	20.0	Plate Grip DOL	1.25	TC	0.78	Vert(LL)	0.31	16-18	>999	360	MT20	244/190
TCDL	15.0	Lumber DOL	1.25	BC	0.80	Vert(CT)	-0.32	16-18	>999	240		
BCLL	0.0*	Rep Stress Incr	NO	WB	0.74	Horz(CT)	0.06	13	n/a	n/a		
BCDL	10.0	Code	FBC2023/TPI2014	Matrix-MS							Weight: 584 lb	FT = 20%

LUMBER
TOP CHORD 2x4 SP No.2 *Except* T3:2x4 SP 2250F 1.8E
BOT CHORD 2x4 SP No.2
WEBS 2x4 SP No.3 *Except* W4:2x4 SP No.2

BRACING
TOP CHORD Structural wood sheathing directly applied or 5-4-3 oc purlins.
BOT CHORD Rigid ceiling directly applied or 5-11-6 oc bracing.
WEBS 1 Row at midpt 9-19

REACTIONS (lb/size) 2=1280/0-6-0, (min. 0-1-8), 13=2554/0-6-0, (min. 0-1-9), 21=6716/0-6-0, (min. 0-4-4)
Max Horiz 2=-231 (LC 6)
Max Uplift 2=-795 (LC 8), 13=-1739 (LC 4), 21=-4461 (LC 5)
Max Grav 2=1468 (LC 15), 13=2638 (LC 17), 21=7245 (LC 18)

FORCES (lb) - Max. Comp./Max. Ten. - All forces 250 (lb) or less except when shown.
TOP CHORD 2-3=-2140/1132, 3-32=-1806/1092, 32-33=-1806/1092, 33-34=-1806/1092, 4-34=-1806/1092, 4-35=-750/607, 35-36=-750/607, 36-37=-750/607, 5-37=-750/607, 5-6=-1976/3094, 6-7=-346/507, 7-38=-346/507, 38-39=-346/507, 8-39=-346/507, 8-40=-346/507, 40-41=-346/507, 41-42=-346/507, 9-42=-346/507, 9-43=-4031/2910, 43-44=-4031/2910, 10-44=-4031/2910, 10-45=-4031/2910, 11-45=-4031/2910, 11-46=-5326/3695, 46-47=-5326/3695, 47-48=-5326/3695, 12-48=-5326/3695, 12-13=-4751/3069
BOT CHORD 2-25=-902/1884, 25-49=-412/852, 49-50=-412/852, 50-51=-412/852, 24-51=-412/852, 24-52=-3010/2096, 23-52=-3010/2096, 23-53=-3010/2096, 53-54=-3010/2096, 22-54=-3010/2096, 21-22=-4144/2685, 21-55=-4144/2685, 20-55=-4144/2685, 20-56=-4144/2685, 56-57=-4144/2685, 19-57=-4144/2685, 19-58=-2746/4114, 58-59=-2746/4114, 59-60=-2746/4114, 18-60=-2746/4114, 18-61=-3509/5410, 61-62=-3509/5410, 17-62=-3509/5410, 17-63=-3509/5410, 16-63=-3509/5410, 16-64=-2531/4099, 64-65=-2531/4099, 65-66=-2531/4099, 15-66=-2531/4099, 13-15=-2520/4072
WEBS 3-25=0/324, 12-16=-1220/1525, 12-15=-313/784, 4-24=-1794/1430, 4-25=-746/1236, 5-24=-2402/4293, 5-22=-2923/1882, 6-22=-1729/3293, 6-21=-6953/4274, 6-19=-3820/5816, 8-19=-1014/909, 9-19=-4322/2810, 9-18=-540/1194, 11-18=-1516/919, 11-16=-375/600

NOTES
1) 2-ply truss to be connected together with 10d (0.131"x3") nails as follows:
Top chords connected as follows: 2x4 - 1 row at 0-9-0 oc.
Bottom chords connected as follows: 2x4 - 1 row at 0-9-0 oc.
Web connected as follows: 2x4 - 1 row at 0-9-0 oc.
2) All loads are considered equally applied to all plies, except if noted as front (F) or back (B) face in the LOAD CASE(S) section. Ply to ply connections have been provided to distribute only loads noted as (F) or (B), unless otherwise indicated.
3) Unbalanced roof live loads have been considered for this design.
4) Wind: ASCE 7-22; Vult=160mph (3-second gust) Vasd=124mph; TCDL=6.0psf; BCDL=6.0psf; h=15ft; Cat. II; Exp C; Enclosed; MWFRS (envelope) exterior (2) zone; cantilever left and right exposed ; end vertical left and right exposed; porch right exposed; Lumber DOL=1.60 plate grip DOL=1.60
5) Building Designer / Project engineer responsible for verifying applied roof live load shown covers rain loading requirements specific to the use of this truss component.
6) Provide adequate drainage to prevent water ponding.
7) All plates are 3x5 MT20 unless otherwise indicated.
8) This truss has been designed for a 10.0 psf bottom chord live load nonconcurrent with any other live loads.
9) * This truss has been designed for a live load of 20.0psf on the bottom chord in all areas where a rectangle 3-06-00 tall by 2-00-00 wide will fit between the bottom chord and any other members.
10) Provide mechanical connection (by others) of truss to bearing plate capable of withstanding 795 lb uplift at joint 2, 1739 lb uplift at joint 13 and 4461 lb uplift at joint 21.
11) "NAILED" indicates 3-10d (0.148"x3") or 3-12d (0.148"x3.25") toe-nails per NDS guidlines.
12) Hanger(s) or other connection device(s) shall be provided sufficient to support concentrated load(s) 444 lb down and 291 lb up at 7-0-0, and 444 lb down and 291 lb up at 48-4-0 on top chord, and 538 lb down and 227 lb up at 7-0-0, and 599 lb down and 227 lb up at 48-3-4 on bottom chord. The design/selection of such connection device(s) is the responsibility of others.

LOAD CASE(S) Standard
1) Dead + Roof Live (balanced): Lumber Increase=1.25, Plate Increase=1.25
Uniform Loads (lb/ft)
Vert: 1-3=-70, 3-12=-70, 12-14=-70, 26-29=-20
Concentrated Loads (lb)
Vert: 3=-175 (F), 7=-142 (F), 12=-175 (F), 25=-411 (F), 15=-411 (F), 5=-142 (F), 22=-66 (F), 9=-142 (F), 18=-66 (F), 32=-142 (F), 33=-142 (F), 34=-142 (F), 35=-142 (F), 36=-142 (F), 37=-142 (F), 38=-142 (F), 39=-142 (F), 40=-142 (F), 41=-142 (F), 42=-142 (F), 43=-142 (F), 44=-142 (F), 45=-142 (F), 46=-142 (F), 47=-142 (F), 48=-142 (F), 49=-66 (F), 50=-66 (F), 51=-66 (F), 52=-66 (F), 53=-66 (F), 54=-66 (F), 55=-66 (F), 56=-66 (F), 57=-66 (F), 58=-66 (F), 59=-66 (F), 60=-66 (F), 61=-66 (F), 62=-66 (F), 63=-66 (F), 64=-66 (F), 65=-66 (F), 66=-66 (F)

Job	Truss	Truss Type	Qty	Ply	
55828	A2	Hip	1	1	Job Reference (optional)

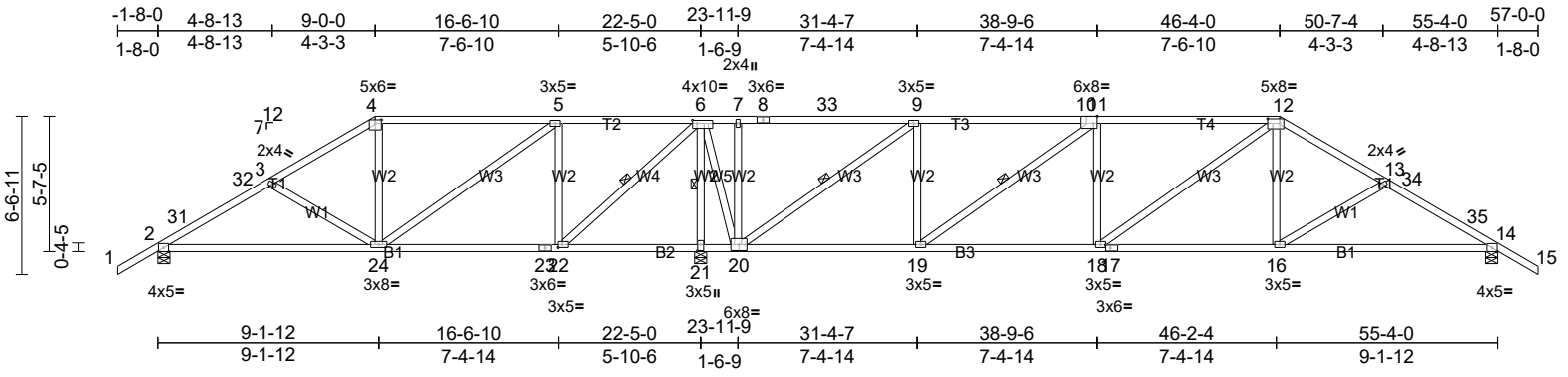

Scale = 1:95.4

Plate Offsets (X, Y): [4:0-3-0,0-1-12], [6:0-2-4,0-1-8], [10:0-1-12,Edge], [12:0-6-0,0-2-4], [17:0-2-7,0-1-8], [21:0-3-0,0-1-8], [22:0-2-0,0-1-8]

Loading	(psf)	Spacing	2-0-0	CSI		DEFL	in	(loc)	l/defl	L/d	PLATES	GRIP
TCLL (roof)	20.0	Plate Grip DOL	1.25	TC	0.84	Vert(LL)	0.34	16-30	>999	360	MT20	244/190
TCDL	15.0	Lumber DOL	1.25	BC	0.81	Vert(CT)	-0.34	16-30	>999	240		
BCLL	0.0*	Rep Stress Incr	YES	WB	0.92	Horz(CT)	0.07	14	n/a	n/a		
BCDL	10.0	Code	FBC2023/TPI2014	Matrix-MS							Weight: 313 lb	FT = 20%

LUMBER
TOP CHORD 2x4 SP No.2
BOT CHORD 2x4 SP No.2
WEBS 2x4 SP No.3

BRACING
TOP CHORD Structural wood sheathing directly applied or 2-2-0 oc purlins.
BOT CHORD Rigid ceiling directly applied or 4-5-14 oc bracing.
WEBS 1 Row at midpt 6-22, 6-21, 9-20, 11-19

MiTek recommends that Stabilizers and required cross bracing be installed during truss erection, in accordance with Stabilizer Installation guide.

REACTIONS (lb/size) 2=814/0-6-0, (min. 0-1-8), 14=1386/0-6-0, (min. 0-1-10), 21=3014/0-6-0, (min. 0-3-9)
Max Horiz 2=-284 (LC 10)
Max Uplift 2=-504 (LC 12), 14=-984 (LC 8), 21=-2089 (LC 9)
Max Grav 2=867 (LC 19), 14=1395 (LC 26), 21=3014 (LC 1)

FORCES (lb) - Max. Comp./Max. Ten. - All forces 250 (lb) or less except when shown.
TOP CHORD 2-31=-1035/645, 31-32=-1003/655, 3-32=-936/667, 3-4=-713/525, 4-5=-607/532, 5-6=-249/316, 6-7=-451/795, 7-8=-453/798, 8-33=-453/798, 9-33=-453/798, 9-10=-962/1110, 10-11=-962/1110, 11-12=-1725/1698, 12-13=-1817/1655, 13-34=-1986/1787, 34-35=-2056/1770, 14-35=-2102/1766
BOT CHORD 2-24=-593/1046, 23-24=-179/588, 22-23=-179/588, 21-22=-1288/1134, 20-21=-1288/1134, 19-20=-899/962, 18-19=-1441/1725, 17-18=-1138/1510, 16-17=-1138/1510, 14-16=-1424/1776
WEBS 3-24=-437/351, 4-24=-100/266, 12-16=-456/443, 13-16=-390/391, 12-18=-474/354, 5-22=-974/682, 5-24=-452/752, 6-22=-876/1611, 6-21=-2874/2108, 6-20=-1530/1727, 7-20=-391/333, 9-20=-2117/1750, 9-19=-682/740, 11-19=-955/778

NOTES
1) Unbalanced roof live loads have been considered for this design.
2) Wind: ASCE 7-22; Vult=160mph (3-second gust) Vasd=124mph; TCDL=6.0psf; BCDL=6.0psf; h=15ft; Cat. II; Exp C; Enclosed; MWFRS (envelope) exterior (2) zone and C-C Zone3 -1-8-0 to 3-10-6, Zone1 3-10-6 to 9-0-0, Zone2 9-0-0 to 16-6-10, Zone1 16-6-10 to 46-4-0, Zone2 46-4-0 to 54-1-15, Zone1 54-1-15 to 57-0-0 zone; cantilever left and right exposed ; end vertical left and right exposed; porch right exposed;C-C for members and forces & MWFRS for reactions shown; Lumber DOL=1.60 plate grip DOL=1.60
3) Building Designer / Project engineer responsible for verifying applied roof live load shown covers rain loading requirements specific to the use of this truss component.
4) Provide adequate drainage to prevent water ponding.
5) This truss has been designed for a 10.0 psf bottom chord live load nonconcurrent with any other live loads.
6) * This truss has been designed for a live load of 20.0psf on the bottom chord in all areas where a rectangle 3-06-00 tall by 2-00-00 wide will fit between the bottom chord and any other members.
7) Provide mechanical connection (by others) of truss to bearing plate capable of withstanding 504 lb uplift at joint 2, 984 lb uplift at joint 14 and 2089 lb uplift at joint 21.

LOAD CASE(S) Standard

Job	Truss	Truss Type	Qty	Ply	
55828	A3	Hip	1	1	Job Reference (optional)

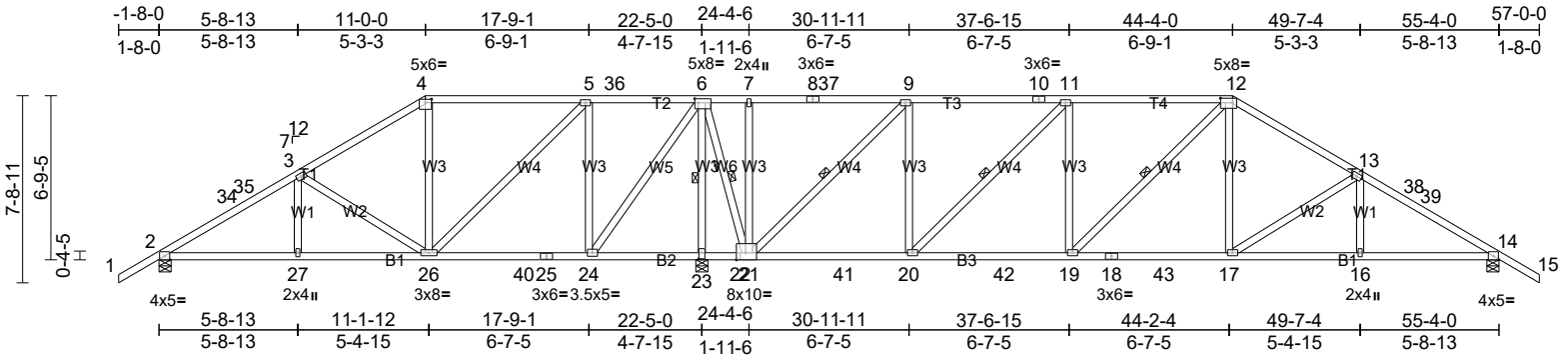

Scale = 1:95.5

Plate Offsets (X, Y): [4:0-3-0,0-1-12], [6:0-1-12,0-2-0], [12:0-6-0,0-2-4], [22:0-4-8,Edge], [23:0-3-0,0-1-8]

Loading	(psf)	Spacing	2-0-0	CSI		DEFL	in	(loc)	l/defl	L/d	PLATES	GRIP
TCLL (roof)	20.0	Plate Grip DOL	1.25	TC	0.61	Vert(LL)	0.25	17-19	>999	360	MT20	244/190
TCDL	15.0	Lumber DOL	1.25	BC	0.64	Vert(CT)	-0.27	17-19	>999	240		
BCLL	0.0*	Rep Stress Incr	YES	WB	0.88	Horz(CT)	0.07	14	n/a	n/a		
BCDL	10.0	Code	FBC2023/TPI2014	Matrix-MS							Weight: 341 lb	FT = 20%

LUMBER
TOP CHORD 2x4 SP No.2
BOT CHORD 2x4 SP No.2
WEBS 2x4 SP No.3

BRACING
TOP CHORD Structural wood sheathing directly applied or 3-6-8 oc purlins.
BOT CHORD Rigid ceiling directly applied or 4-8-10 oc bracing.
WEBS 1 Row at midpt 12-19, 6-23, 6-21, 9-21, 11-20

MiTek recommends that Stabilizers and required cross bracing be installed during truss erection, in accordance with Stabilizer Installation guide.

REACTIONS (lb/size) 2=824/0-6-0, (min. 0-1-8), 14=1393/0-6-0, (min. 0-1-12), 23=2997/0-6-0, (min. 0-3-14)
Max Horiz 2=-337 (LC 10)
Max Uplift 2=-501 (LC 12), 14=-966 (LC 8), 23=-1966 (LC 9)
Max Grav 2=1017 (LC 19), 14=1499 (LC 28), 23=3288 (LC 2)

FORCES (lb) - Max. Comp./Max. Ten. - All forces 250 (lb) or less except when shown.
TOP CHORD 2-34=-1266/599, 34-35=-1184/600, 3-35=-1123/616, 3-4=-670/473, 4-5=-524/493, 5-36=-189/375, 6-36=-189/375, 6-7=-211/599, 7-8=-211/599, 8-37=-211/599, 9-37=-211/599, 9-10=-848/965, 10-11=-848/965, 11-12=-1535/1434, 12-13=-1824/1525, 13-38=-2223/1838, 38-39=-2243/1823, 14-39=-2325/1820

BOT CHORD 2-27=-567/1248, 26-27=-567/1248, 26-40=-258/605, 25-40=-258/605, 24-25=-258/605, 23-24=-1135/967, 22-23=-1135/967, 21-22=-1135/967, 21-41=-722/848, 20-41=-722/848, 20-42=-1118/1535, 19-42=-1118/1535, 18-19=-980/1511, 18-43=-980/1511, 17-43=-980/1511, 16-17=-1441/1948, 14-16=-1441/1948

WEBS 3-26=-716/426, 12-17=-494/528, 13-17=-563/599, 12-19=-319/145, 5-24=-1033/656, 5-26=-456/884, 6-24=-693/1521, 6-23=-3142/1942, 6-21=-1424/1864, 7-21=-351/302, 9-21=-1968/1419, 9-20=-711/975, 11-20=-979/724, 11-19=-190/311

NOTES
1) Unbalanced roof live loads have been considered for this design.
2) Wind: ASCE 7-22; Vult=160mph (3-second gust) Vasd=124mph; TCDL=6.0psf; BCDL=6.0psf; h=15ft; Cat. II; Exp C; Enclosed; MWFRS (envelope) exterior (2) zone and C-C Zone3 -1-8-0 to 3-10-6, Zone1 3-10-6 to 11-0-0, Zone2 11-0-0 to 18-9-15, Zone1 18-9-15 to 44-4-0, Zone2 44-4-0 to 52-1-15, Zone1 52-1-15 to 57-0-0 zone; cantilever left and right exposed ; end vertical left and right exposed; porch right exposed;C-C for members and forces & MWFRS for reactions shown; Lumber DOL=1.60 plate grip DOL=1.60
3) Building Designer / Project engineer responsible for verifying applied roof live load shown covers rain loading requirements specific to the use of this truss component.
4) Provide adequate drainage to prevent water ponding.
5) All plates are 3x5 MT20 unless otherwise indicated.
6) This truss has been designed for a 10.0 psf bottom chord live load nonconcurrent with any other live loads.
7) * This truss has been designed for a live load of 20.0psf on the bottom chord in all areas where a rectangle 3-06-00 tall by 2-00-00 wide will fit between the bottom chord and any other members, with BCDL = 10.0psf.
8) Provide mechanical connection (by others) of truss to bearing plate capable of withstanding 501 lb uplift at joint 2, 966 lb uplift at joint 14 and 1966 lb uplift at joint 23.

LOAD CASE(S) Standard

Job	Truss	Truss Type	Qty	Ply	
55828	A4	Hip	1	1	Job Reference (optional)

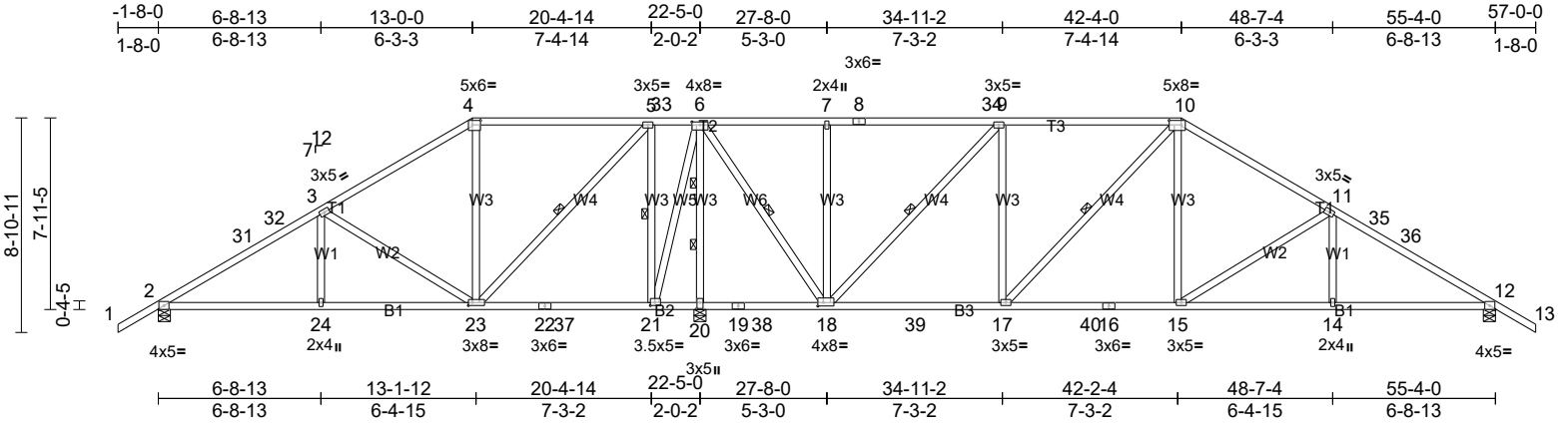

Scale = 1:95.6

Plate Offsets (X, Y): [4:0-4-0,0-2-4], [6:0-4-0,0-1-8], [10:0-6-0,0-2-4], [18:0-2-12,0-1-12], [20:0-3-0,0-1-8], [21:0-2-4,0-1-8], [23:0-2-0,0-1-8]

Loading	(psf)	Spacing	2-0-0	CSI		DEFL	in	(loc)	l/defl	L/d	PLATES	GRIP
TCLL (roof)	20.0	Plate Grip DOL	1.25	TC	0.75	Vert(LL)	0.24	15-17	>999	360	MT20	244/190
TCDL	15.0	Lumber DOL	1.25	BC	0.72	Vert(CT)	-0.27	15-17	>999	240		
BCLL	0.0*	Rep Stress Incr	YES	WB	0.93	Horz(CT)	0.07	12	n/a	n/a		
BCDL	10.0	Code	FBC2023/TPI2014	Matrix-MS							Weight: 345 lb	FT = 20%

LUMBER
TOP CHORD 2x4 SP No.2
BOT CHORD 2x4 SP No.2
WEBS 2x4 SP No.3

BRACING
TOP CHORD Structural wood sheathing directly applied or 3-3-5 oc purlins.
BOT CHORD Rigid ceiling directly applied or 4-7-9 oc bracing.
WEBS 1 Row at midpt 10-17, 5-21, 5-23, 6-18, 9-18
WEBS 2 Rows at 1/3 pts 6-20

MiTek recommends that Stabilizers and required cross bracing be installed during truss erection, in accordance with Stabilizer Installation guide.

REACTIONS (lb/size) 2=853/0-6-0, (min. 0-1-8), 12=1412/0-6-0, (min. 0-1-13), 20=2948/0-6-0, (min. 0-3-14)
Max Horiz 2=-390 (LC 10)
Max Uplift 2=-506 (LC 12), 12=-951 (LC 8), 20=-1822 (LC 9)
Max Grav 2=1061 (LC 19), 12=1521 (LC 28), 20=3278 (LC 2)

FORCES (lb) - Max. Comp./Max. Ten. - All forces 250 (lb) or less except when shown.
TOP CHORD 2-31=-1290/583, 31-32=-1188/587, 3-32=-1120/604, 3-4=-565/425, 4-5=-420/465, 5-33=-225/525, 6-33=-225/525, 6-7=-289/568, 7-8=-289/568, 8-34=-289/568, 9-34=-289/568, 9-10=-1224/1201, 10-11=-1706/1425, 11-35=-2153/1817, 35-36=-2221/1800, 12-36=-2324/1794

BOT CHORD 2-24=-572/1295, 23-24=-572/1295, 22-23=-500/704, 22-37=-500/704, 21-37=-500/704, 20-21=-862/836, 19-20=-862/836, 19-38=-862/836, 18-38=-862/836, 18-39=-856/1224, 17-39=-856/1224, 17-40=-848/1393, 16-40=-848/1393, 15-16=-848/1393, 14-15=-1410/1937, 12-14=-1410/1937

WEBS 3-24=0/276, 3-23=-867/518, 4-23=-281/280, 10-15=-568/619, 11-15=-686/714, 11-14=-213/275, 10-17=-377/212, 5-21=-1201/715, 5-23=-532/1130, 6-21=-639/1425, 6-20=-3106/1770, 6-18=-1418/1944, 7-18=-445/380, 9-18=-1379/1011, 9-17=-378/528

NOTES
1) Unbalanced roof live loads have been considered for this design.
2) Wind: ASCE 7-22; Vult=160mph (3-second gust) Vasd=124mph; TCDL=6.0psf; BCDL=6.0psf; h=15ft; Cat. II; Exp C; Enclosed; MWFRS (envelope) exterior (2) zone and C-C Zone3 -1-8-0 to 3-10-6, Zone1 3-10-6 to 13-0-0, Zone2 13-0-0 to 20-9-15, Zone1 20-9-15 to 42-4-0, Zone2 42-4-0 to 50-1-15, Zone1 50-1-15 to 57-0-0 zone; cantilever left and right exposed ; end vertical left and right exposed; porch right exposed;C-C for members and forces & MWFRS for reactions shown; Lumber DOL=1.60 plate grip DOL=1.60
3) Building Designer / Project engineer responsible for verifying applied roof live load shown covers rain loading requirements specific to the use of this truss component.
4) Provide adequate drainage to prevent water ponding.
5) This truss has been designed for a 10.0 psf bottom chord live load nonconcurrent with any other live loads.
6) * This truss has been designed for a live load of 20.0psf on the bottom chord in all areas where a rectangle 3-06-00 tall by 2-00-00 wide will fit between the bottom chord and any other members, with BCDL = 10.0psf.
7) Provide mechanical connection (by others) of truss to bearing plate capable of withstanding 506 lb uplift at joint 2, 951 lb uplift at joint 12 and 1822 lb uplift at joint 20.

LOAD CASE(S) Standard

Job	Truss	Truss Type	Qty	Ply	
55828	A5	Hip	1	1	Job Reference (optional)

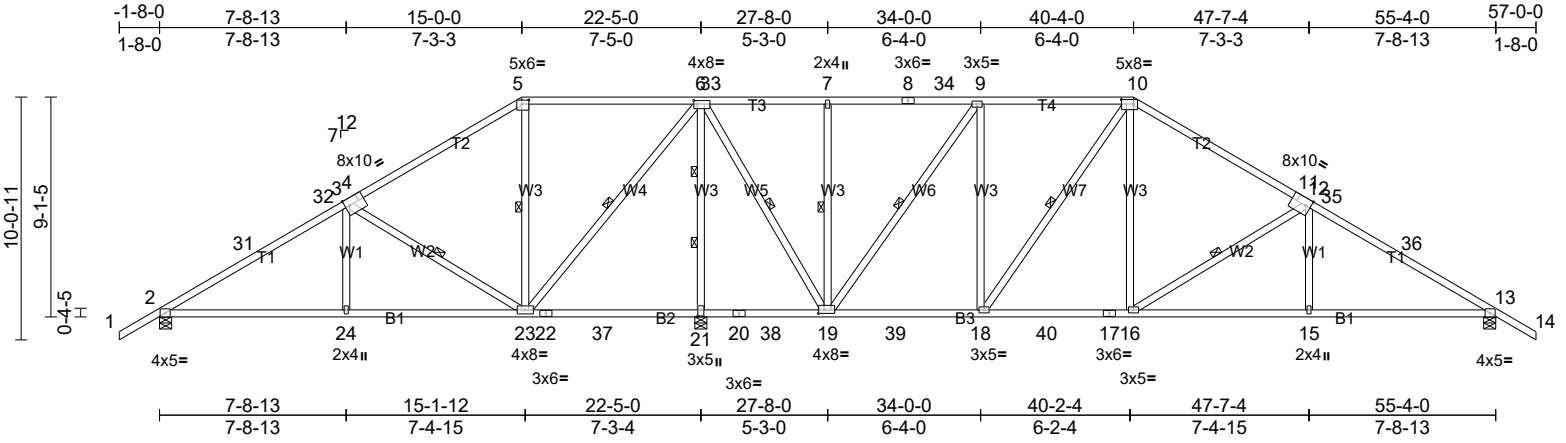

Scale = 1:95.8

Plate Offsets (X, Y): [4:0-2-4,Edge], [5:0-3-8,0-2-0], [6:0-1-12,0-1-12], [10:0-6-0,0-2-4], [11:0-2-8,Edge], [19:0-2-12,0-1-12], [21:0-3-0,0-1-8]

Loading	(psf)	Spacing	2-0-0	CSI		DEFL	in	(loc)	l/defl	L/d	PLATES	GRIP
TCLL (roof)	20.0	Plate Grip DOL	1.25	TC	0.88	Vert(LL)	0.27	15-30	>999	360	MT20	244/190
TCDL	15.0	Lumber DOL	1.25	BC	0.84	Vert(CT)	-0.20	24-27	>999	240		
BCLL	0.0*	Rep Stress Incr	YES	WB	0.99	Horz(CT)	0.06	13	n/a	n/a		
BCDL	10.0	Code	FBC2023/TPI2014	Matrix-MS							Weight: 341 lb	FT = 20%

LUMBER
TOP CHORD 2x4 SP No.2
BOT CHORD 2x4 SP No.2
WEBS 2x4 SP No.3

BRACING
TOP CHORD Structural wood sheathing directly applied or 2-9-5 oc purlins.
BOT CHORD Rigid ceiling directly applied or 4-6-12 oc bracing.
WEBS 1 Row at midpt 3-23, 5-23, 12-16, 10-18, 6-19, 7-19, 9-19, 6-23
WEBS 2 Rows at 1/3 pts 6-21

MiTek recommends that Stabilizers and required cross bracing be installed during truss erection, in accordance with Stabilizer Installation guide.

REACTIONS (lb/size) 2=842/0-6-0, (min. 0-1-8), 13=1405/0-6-0, (min. 0-1-13), 21=2967/0-6-0, (min. 0-3-15)
Max Horiz 2=-444 (LC 10)
Max Uplift 2=-488 (LC 12), 13=-935 (LC 8), 21=-1687 (LC 9)
Max Grav 2=1054 (LC 19), 13=1512 (LC 28), 21=3316 (LC 2)

FORCES (lb) - Max. Comp./Max. Ten. - All forces 250 (lb) or less except when shown.
TOP CHORD 2-31=-1213/523, 31-32=-1110/544, 3-32=-993/547, 3-4=-352/285, 4-5=-340/330, 5-6=-268/396, 6-33=-231/572, 7-33=-231/572, 7-8=-231/572, 8-34=-231/572, 9-34=-231/572, 9-10=-974/1059, 10-11=-1505/1310, 11-12=-1517/1265, 12-35=-2041/1778, 35-36=-2158/1775, 13-36=-2261/1751
BOT CHORD 2-24=-539/1253, 23-24=-539/1253, 22-23=-752/772, 22-37=-752/772, 21-37=-752/772, 20-21=-752/772, 20-38=-752/772, 19-38=-752/772, 19-39=-672/974, 18-39=-672/974, 18-40=-708/1212, 17-40=-708/1212, 16-17=-708/1212, 15-16=-1363/1874, 13-15=-1363/1874
WEBS 3-24=0/333, 3-23=-1025/613, 5-23=-408/312, 10-16=-625/677, 12-16=-811/832, 12-15=-259/333, 10-18=-491/338, 6-21=-2991/1887, 6-19=-1341/1804, 7-19=-353/291, 9-19=-1297/931, 9-18=-458/637, 6-23=-589/1314

NOTES
1) Unbalanced roof live loads have been considered for this design.
2) Wind: ASCE 7-22; Vult=160mph (3-second gust) Vasd=124mph; TCDL=6.0psf; BCDL=6.0psf; h=15ft; Cat. II; Exp C; Enclosed; MWFRS (envelope) exterior (2) zone and C-C Zone3 -1-8-0 to 3-10-6, Zone1 3-10-6 to 15-0-0, Zone2 15-0-0 to 22-9-15, Zone1 22-9-15 to 40-4-0, Zone2 40-4-0 to 48-1-15, Zone1 48-1-15 to 57-0-0 zone; cantilever left and right exposed ; end vertical left and right exposed; porch right exposed;C-C for members and forces & MWFRS for reactions shown; Lumber DOL=1.60 plate grip DOL=1.60
3) Building Designer / Project engineer responsible for verifying applied roof live load shown covers rain loading requirements specific to the use of this truss component.
4) Provide adequate drainage to prevent water ponding.
5) This truss has been designed for a 10.0 psf bottom chord live load nonconcurrent with any other live loads.
6) * This truss has been designed for a live load of 20.0psf on the bottom chord in all areas where a rectangle 3-06-00 tall by 2-00-00 wide will fit between the bottom chord and any other members, with BCDL = 10.0psf.
7) Provide mechanical connection (by others) of truss to bearing plate capable of withstanding 488 lb uplift at joint 2, 935 lb uplift at joint 13 and 1687 lb uplift at joint 21.

LOAD CASE(S) Standard

Job	Truss	Truss Type	Qty	Ply	
55828	A6	Hip	1	1	Job Reference (optional)

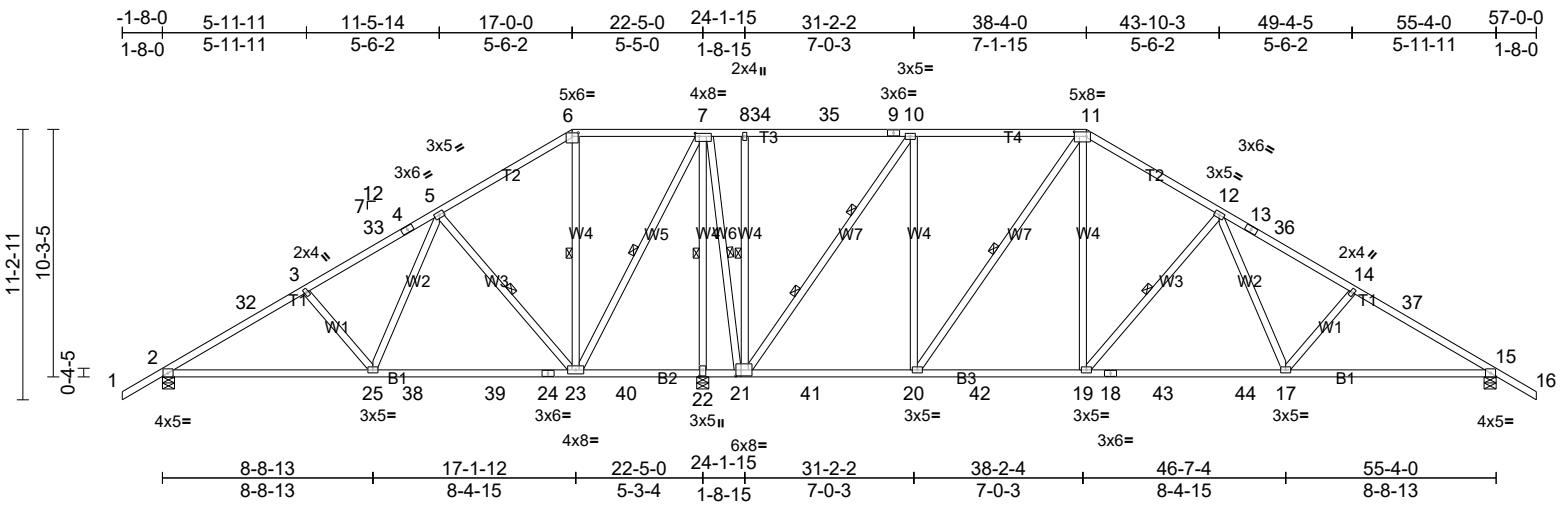

Scale = 1:96

Plate Offsets (X, Y): [6:0-3-0,0-1-12], [7:0-2-0,0-1-8], [11:0-6-0,0-2-4], [21:0-2-8,0-3-0], [22:0-3-0,0-1-8]

Loading	(psf)	Spacing	2-0-0	CSI		DEFL	in	(loc)	l/defl	L/d	PLATES	GRIP
TCLL (roof)	20.0	Plate Grip DOL	1.25	TC	0.78	Vert(LL)	0.30	17-31	>999	360	MT20	244/190
TCDL	15.0	Lumber DOL	1.25	BC	0.94	Vert(CT)	-0.36	17-19	>999	240		
BCLL	0.0*	Rep Stress Incr	YES	WB	0.99	Horz(CT)	0.07	15	n/a	n/a		
BCDL	10.0	Code	FBC2023/TPI2014	Matrix-MS							Weight: 375 lb	FT = 20%

LUMBER
TOP CHORD 2x4 SP No.2
BOT CHORD 2x4 SP No.2
WEBS 2x4 SP No.3 *Except* W4:2x4 SP 2250F 1.8E

BRACING
TOP CHORD Structural wood sheathing directly applied or 3-4-1 oc purlins.
BOT CHORD Rigid ceiling directly applied or 2-2-0 oc bracing.
WEBS 1 Row at midpt 5-23, 6-23, 11-20, 12-19, 7-22, 7-21, 7-23, 8-21
WEBS 2 Rows at 1/3 pts 10-21

MiTek recommends that Stabilizers and required cross bracing be installed during truss erection, in accordance with Stabilizer Installation guide.

REACTIONS (lb/size) 2=816/0-6-0, (min. 0-1-8), 15=1387/0-6-0, (min. 0-1-13), 22=3011/0-6-0, (min. 0-4-0)
Max Horiz 2=-497 (LC 10)
Max Uplift 2=-444 (LC 12), 15=-917 (LC 8), 22=-1548 (LC 9)
Max Grav 2=1042 (LC 19), 15=1530 (LC 28), 22=3384 (LC 2)

FORCES (lb) - Max. Comp./Max. Ten. - All forces 250 (lb) or less except when shown.
TOP CHORD 2-32=-1220/489, 3-32=-1133/507, 3-33=-1000/445, 4-33=-900/462, 4-5=-847/476, 5-6=-120/312, 6-7=-89/275, 7-8=-13/546, 8-34=-9/545, 34-35=-9/545, 9-35=-9/545, 9-10=-9/545, 10-11=-634/836, 11-12=-1304/1194, 12-13=-1957/1736, 13-36=-2010/1722, 14-36=-2109/1706, 14-37=-2222/1755, 15-37=-2308/1735
BOT CHORD 2-25=-574/1344, 25-38=-222/756, 38-39=-222/756, 24-39=-222/756, 23-24=-222/756, 23-40=-744/788, 22-40=-744/788, 21-22=-744/788, 21-41=-495/634, 20-41=-495/634, 20-42=-570/1061, 19-42=-570/1061, 18-19=-946/1500, 18-43=-946/1500, 43-44=-946/1500, 17-44=-946/1500, 15-17=-1374/1952
WEBS 3-25=-459/411, 5-25=-243/785, 5-23=-928/584, 6-23=-414/244, 11-20=-767/555, 11-19=-777/868, 12-19=-760/730, 12-17=-578/654, 14-17=-431/408, 7-22=-3173/1936, 7-21=-1297/1769, 7-23=-608/1416, 8-21=-267/233, 10-21=-1763/1255, 10-20=-669/953

NOTES
1) Unbalanced roof live loads have been considered for this design.
2) Wind: ASCE 7-22; Vult=160mph (3-second gust) Vasd=124mph; TCDL=6.0psf; BCDL=6.0psf; h=15ft; Cat. II; Exp C; Enclosed; MWFRS (envelope) exterior (2) zone and C-C Zone3 -1-8-0 to 3-10-6, Zone1 3-10-6 to 17-0-0, Zone2 17-0-0 to 24-9-15, Zone1 24-9-15 to 38-4-0, Zone2 38-4-0 to 46-1-15, Zone1 46-1-15 to 57-0-0 zone; cantilever left and right exposed ; end vertical left and right exposed; porch right exposed;C-C for members and forces & MWFRS for reactions shown; Lumber DOL=1.60 plate grip DOL=1.60
3) Building Designer / Project engineer responsible for verifying applied roof live load shown covers rain loading requirements specific to the use of this truss component.
4) Provide adequate drainage to prevent water ponding.
5) All plates are 3x5 MT20 unless otherwise indicated.
6) This truss has been designed for a 10.0 psf bottom chord live load nonconcurrent with any other live loads.
7) * This truss has been designed for a live load of 20.0psf on the bottom chord in all areas where a rectangle 3-06-00 tall by 2-00-00 wide will fit between the bottom chord and any other members, with BCDL = 10.0psf.
8) Provide mechanical connection (by others) of truss to bearing plate capable of withstanding 444 lb uplift at joint 2, 917 lb uplift at joint 15 and 1548 lb uplift at joint 22.

LOAD CASE(S) Standard

Job	Truss	Truss Type	Qty	Ply	
55828	A7	Roof Special	1	1	Job Reference (optional)

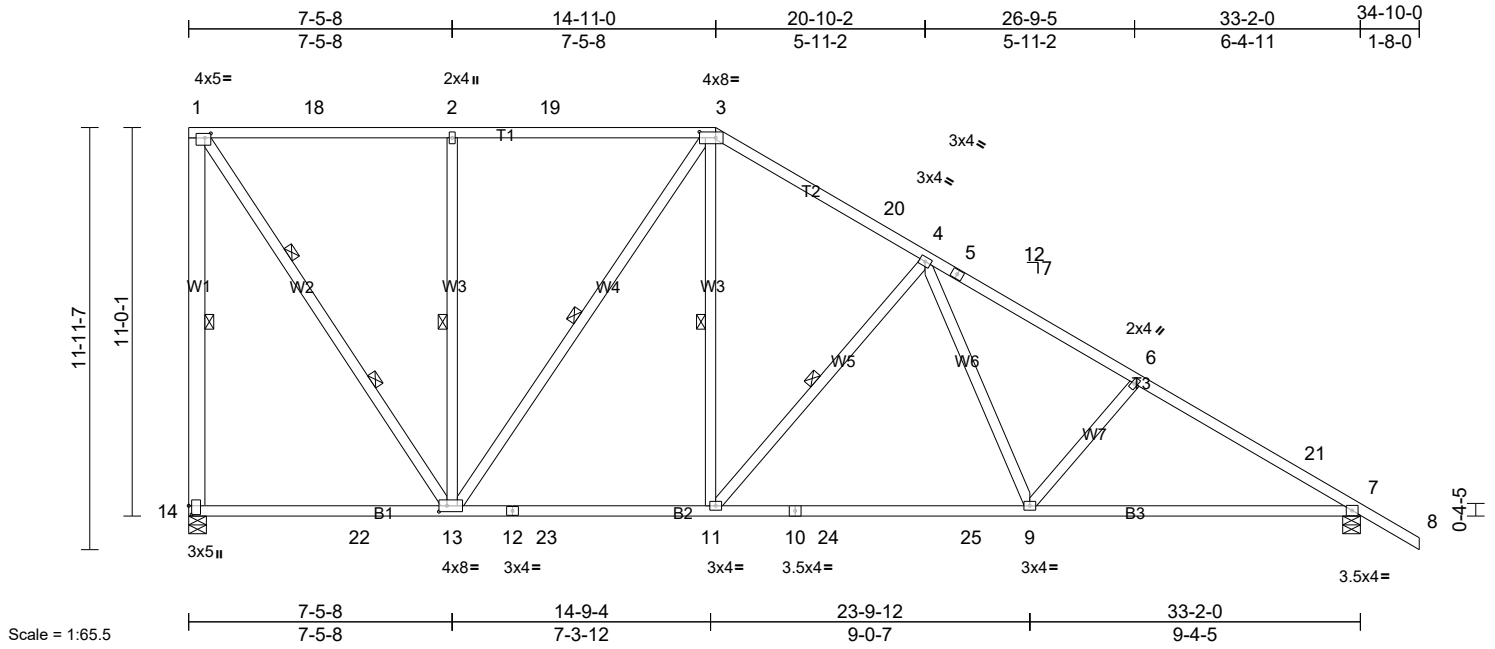

Scale = 1:65.5

Plate Offsets (X, Y): [1:0-2-0,0-1-8], [3:0-5-8,0-2-0], [13:0-2-12,0-2-0], [14:0-3-0,0-1-0]

Loading	(psf)	Spacing	2-0-0	CSI		DEFL	in	(loc)	l/defl	L/d	PLATES	GRIP
TCLL (roof)	20.0	Plate Grip DOL	1.25	TC	0.99	Vert(LL)	0.32	9-17	>999	360	MT20	244/190
TCDL	15.0	Lumber DOL	1.25	BC	0.86	Vert(CT)	-0.38	9-11	>999	240		
BCLL	0.0*	Rep Stress Incr	YES	WB	0.87	Horz(CT)	0.06	7	n/a	n/a		
BCDL	10.0	Code	FBC2023/TPI2014	Matrix-MS							Weight: 230 lb	FT = 20%

LUMBER
TOP CHORD 2x4 SP No.2
BOT CHORD 2x4 SP No.2 *Except* B3:2x4 SP 2250F 1.8E
WEBS 2x4 SP No.3 *Except* W1:2x6 SP No.2

BRACING
TOP CHORD Structural wood sheathing directly applied or 2-11-13 oc purlins, except end verticals.
BOT CHORD Rigid ceiling directly applied or 5-7-2 oc bracing.
WEBS 1 Row at midpt 1-14, 2-13, 3-13, 3-11, 4-11
WEBS 2 Rows at 1/3 pts 1-13

MiTek recommends that Stabilizers and required cross bracing be installed during truss erection, in accordance with Stabilizer Installation guide.

REACTIONS (lb/size) 7=1602/0-6-0, (min. 0-1-8), 14=1479/0-6-0, (min. 0-2-0)
Max Horiz 14=-772 (LC 10)
Max Uplift 7=-839 (LC 8), 14=-1298 (LC 8)
Max Grav 7=1734 (LC 2), 14=1694 (LC 2)

FORCES (lb) - Max. Comp./Max. Ten. - All forces 250 (lb) or less except when shown.
TOP CHORD 1-14=-1536/1328, 1-18=-931/1036, 2-18=-931/1036, 2-19=-931/1036, 3-19=-931/1036, 3-20=-1499/1406, 4-20=-1594/1373, 4-5=-2303/1978, 5-6=-2467/1946, 6-21=-2627/1999, 7-21=-2681/1971
BOT CHORD 14-22=-639/874, 13-22=-639/874, 12-13=-637/1363, 12-23=-637/1363, 11-23=-637/1363, 10-11=-1050/1782, 10-24=-1050/1782, 24-25=-1050/1782, 9-25=-1050/1782, 7-9=-1508/2269
WEBS 1-13=-1421/1630, 2-13=-599/513, 3-13=-678/714, 3-11=-813/935, 4-11=-820/758, 4-9=-623/708, 6-9=-461/439

NOTES

1) Wind: ASCE 7-22; Vult=160mph (3-second gust) Vasd=124mph; TCDL=6.0psf; BCDL=6.0psf; h=15ft; Cat. II; Exp C; Enclosed; MWFRS (envelope) exterior (2) zone and C-C Zone3 0-2-12 to 3-6-9, Zone1 3-6-9 to 14-11-0, Zone2 14-11-0 to 19-7-5, Zone1 19-7-5 to 34-10-0 zone; cantilever left and right exposed ; end vertical left and right exposed; porch left and right exposed;C-C for members and forces & MWFRS for reactions shown; Lumber DOL=1.60 plate grip DOL=1.60
2) Building Designer / Project engineer responsible for verifying applied roof live load shown covers rain loading requirements specific to the use of this truss component.
3) Provide adequate drainage to prevent water ponding.
4) This truss has been designed for a 10.0 psf bottom chord live load nonconcurrent with any other live loads.
5) * This truss has been designed for a live load of 20.0psf on the bottom chord in all areas where a rectangle 3-06-00 tall by 2-00-00 wide will fit between the bottom chord and any other members, with BCDL = 10.0psf.
6) Provide mechanical connection (by others) of truss to bearing plate capable of withstanding 1298 lb uplift at joint 14 and 839 lb uplift at joint 7.

LOAD CASE(S) Standard

Job	Truss	Truss Type	Qty	Ply	
55828	B1	Half Hip Girder	1	2	Job Reference (optional)

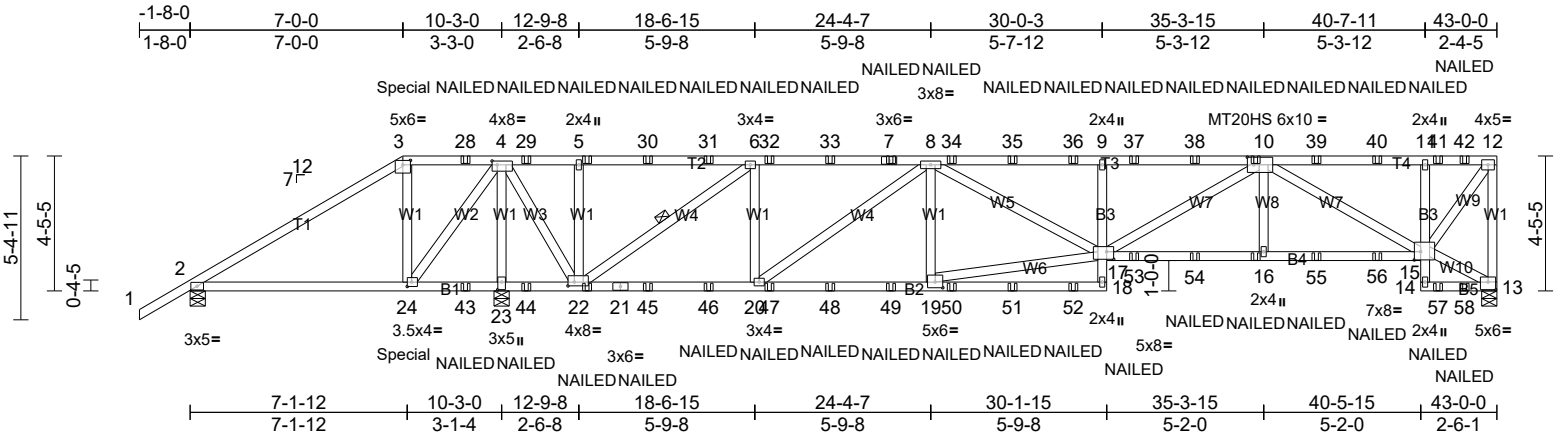

Scale = 1:76.1

Plate Offsets (X, Y): [3:0-3-0,0-1-12], [4:0-2-0,0-1-8], [10:0-2-8,0-3-0], [13:0-3-0,0-3-0], [15:0-2-8,0-3-4], [17:0-2-12,0-3-0], [19:0-3-0,0-2-4], [22:0-2-8,0-1-8], [23:0-3-0,0-1-8], [24:0-1-12,0-1-12]

Loading	(psf)	Spacing	2-0-0	CSI		DEFL	in	(loc)	l/defl	L/d	PLATES	GRIP
TCLL (roof)	20.0	Plate Grip DOL	1.25	TC	0.64	Vert(LL)	0.33	16-17	>999	360	MT20	244/190
TCDL	15.0	Lumber DOL	1.25	BC	0.76	Vert(CT)	-0.38	16-17	>999	240	MT20HS	187/143
BCLL	0.0 *	Rep Stress Incr	NO	WB	0.77	Horz(CT)	0.11	13	n/a	n/a		
BCDL	10.0	Code	FBC2023/TPI2014	Matrix-MS							Weight: 518 lb	FT = 20%

LUMBER
TOP CHORD 2x4 SP No.2
BOT CHORD 2x4 SP No.2 *Except* B3:2x4 SP No.3
WEBS 2x4 SP No.3

BRACING
TOP CHORD Structural wood sheathing directly applied or 4-7-6 oc purlins, except end verticals.
BOT CHORD Rigid ceiling directly applied or 6-0-0 oc bracing.
WEBS 1 Row at midpt 6-22

REACTIONS (lb/size) 2=-755/0-6-0, (min. 0-1-8), 13=2802/0-6-0, (min. 0-1-13), 23=6264/0-6-0, (min. 0-4-0)
Max Horiz 2=317 (LC 7)
Max Uplift 2=-1092 (LC 17), 13=-1714 (LC 5), 23=-3828 (LC 5)
Max Grav 2=664 (LC 4), 13=3065 (LC 17), 23=6730 (LC 18)

FORCES (lb) - Max. Comp./Max. Ten. - All forces 250 (lb) or less except when shown.
TOP CHORD 2-3=-1412/2554, 3-28=-1209/2244, 4-28=-1209/2244, 4-29=-1071/1849, 5-29=-1071/1849, 5-30=-1071/1849, 30-31=-1071/1849, 6-31=-1071/1849, 6-32=-2239/1208, 32-33=-2239/1208, 7-33=-2239/1208, 7-8=-2239/1208, 8-34=-6274/3608, 34-35=-6274/3608, 35-36=-6274/3608, 9-36=-6274/3608, 9-37=-6347/3638, 37-38=-6347/3638, 10-38=-6347/3638, 10-39=-2051/1234, 39-40=-2051/1234, 11-40=-2051/1234, 11-41=-1981/1192, 41-42=-1981/1192, 12-42=-1981/1192, 12-13=-2959/1742
BOT CHORD 2-24=-2173/1329, 24-43=-4058/2317, 23-43=-4058/2317, 23-44=-4058/2317, 22-44=-4058/2317, 21-22=-1203/2101, 21-45=-1203/2101, 45-46=-1203/2101, 20-46=-1203/2101, 20-47=-2435/4319, 47-48=-2435/4319, 48-49=-2435/4319, 19-49=-2435/4319, 19-50=-147/357, 50-51=-147/357, 51-52=-147/357, 18-52=-147/357, 9-17=-783/684, 17-53=-3056/5238, 53-54=-3056/5238, 16-54=-3056/5238, 16-55=-3056/5238, 55-56=-3056/5238, 15-56=-3056/5238, 11-15=-726/621
WEBS 3-24=-1858/1175, 17-19=-2323/4023, 10-17=-725/1360, 10-16=-81/530, 10-15=-3654/2082, 12-15=-2013/3457, 4-23=-6506/3803, 4-22=-2319/4293, 4-24=-1870/3094, 5-22=-665/606, 6-22=-4817/2659, 6-20=-741/1950, 8-20=-2741/1521, 8-19=-371/577, 8-17=-1412/2290

NOTES
1) 2-ply truss to be connected together with 10d (0.131"x3") nails as follows:
Top chords connected as follows: 2x4 - 1 row at 0-9-0 oc.
Bottom chords connected as follows: 2x4 - 1 row at 0-9-0 oc.
Web connected as follows: 2x4 - 1 row at 0-9-0 oc.
2) All loads are considered equally applied to all plies, except if noted as front (F) or back (B) face in the LOAD CASE(S) section. Ply to ply connections have been provided to distribute only loads noted as (F) or (B), unless otherwise indicated.
3) Wind: ASCE 7-22; Vult=160mph (3-second gust) Vasd=124mph; TCDL=6.0psf; BCDL=6.0psf; h=15ft; Cat. II; Exp C; Enclosed; MWFRS (envelope) exterior (2) zone; cantilever left and right exposed ; end vertical left and right exposed; porch left exposed; Lumber DOL=1.60 plate grip DOL=1.60
4) Building Designer / Project engineer responsible for verifying applied roof live load shown covers rain loading requirements specific to the use of this truss component.
5) Provide adequate drainage to prevent water ponding.
6) All plates are MT20 plates unless otherwise indicated.
7) This truss has been designed for a 10.0 psf bottom chord live load nonconcurrent with any other live loads.
8) * This truss has been designed for a live load of 20.0psf on the bottom chord in all areas where a rectangle 3-06-00 tall by 2-00-00 wide will fit between the bottom chord and any other members.
9) Provide mechanical connection (by others) of truss to bearing plate capable of withstanding 1714 lb uplift at joint 13, 1092 lb uplift at joint 2 and 3828 lb uplift at joint 23.
10) This truss has large uplift reaction(s) from gravity load case(s). Proper connection is required to secure truss against upward movement at the bearings. Building designer must provide for uplift reactions indicated.
11) "NAILED" indicates 3-10d (0.148"x3") or 3-12d (0.148"x3.25") toe-nails per NDS guidlines.
12) Hanger(s) or other connection device(s) shall be provided sufficient to support concentrated load(s) 444 lb down and 291 lb up at 7-0-0 on top chord, and 599 lb down and 227 lb up at 7-0-0 on bottom chord. The design/selection of such connection device(s) is the responsibility of others.

LOAD CASE(S) Standard
1) Dead + Roof Live (balanced): Lumber Increase=1.25, Plate Increase=1.25
Uniform Loads (lb/ft)
Vert: 1-3=-70, 3-12=-70, 18-25=-20, 15-17=-20, 13-14=-20
Concentrated Loads (lb)
Vert: 3=-175 (B), 7=-142 (B), 24=-411 (B), 10=-117 (B), 16=-91 (B), 22=-66 (B), 5=-142 (B), 28=-142 (B), 29=-142 (B), 30=-142 (B), 31=-142 (B), 32=-142 (B), 33=-142 (B), 34=-142 (B), 35=-142 (B), 36=-142 (B), 37=-117 (B), 38=-117 (B), 39=-117 (B), 40=-117 (B), 41=-142 (B), 42=-145 (B), 43=-66 (B), 44=-66 (B), 45=-66 (B), 46=-66 (B), 47=-66 (B), 48=-66 (B), 49=-66 (B), 50=-66 (B), 51=-66 (B), 52=-66 (B), 53=-91 (B), 54=-91 (B), 55=-91 (B), 56=-91 (B), 57=-66 (B), 58=-67 (B)

Job	Truss	Truss Type	Qty	Ply	
55828	B2	Half Hip	1	1	Job Reference (optional)

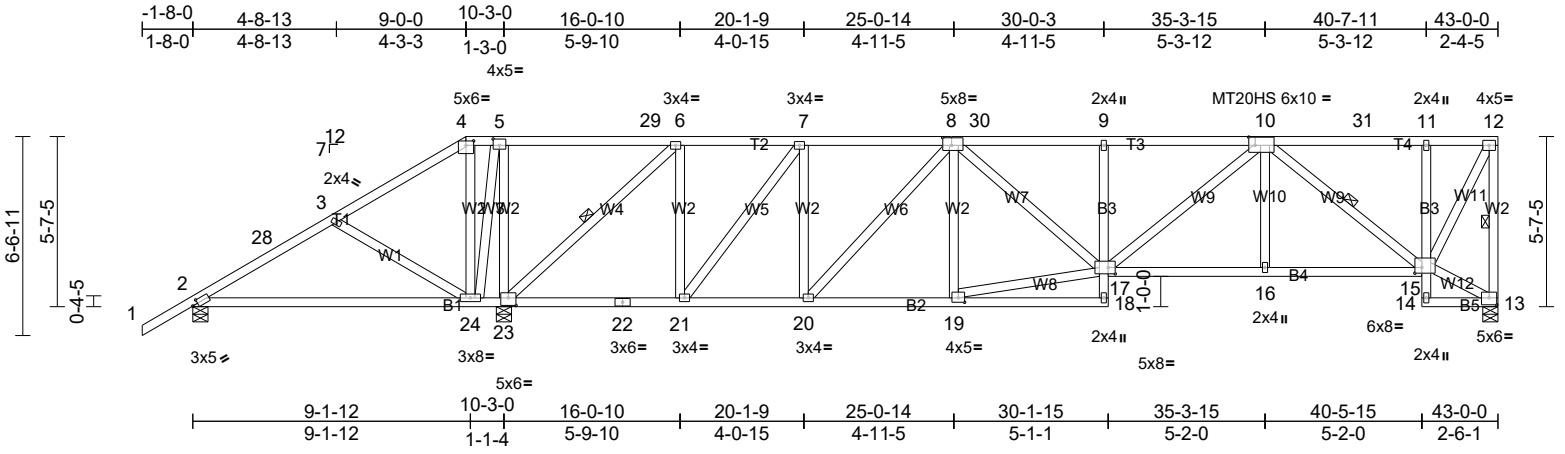

Scale = 1:76.2

Plate Offsets (X, Y): [2:0-2-3,0-1-8], [4:0-3-0,0-1-12], [5:0-2-8,0-2-8], [8:0-3-8,0-3-0], [10:0-2-8,0-3-4], [13:0-3-0,0-2-12], [15:0-2-12,0-2-4], [17:0-2-12,0-2-8], [19:0-2-8,0-1-12], [23:0-3-0,0-3-0]

Loading	(psf)	Spacing	2-0-0	CSI		DEFL	in	(loc)	l/defl	L/d	PLATES	GRIP
TCLL (roof)	20.0	Plate Grip DOL	1.25	TC	0.73	Vert(LL)	0.26	24-27	>482	360	MT20	244/190
TCDL	15.0	Lumber DOL	1.25	BC	0.55	Vert(CT)	-0.27	24-27	>455	240	MT20HS	187/143
BCLL	0.0*	Rep Stress Incr	YES	WB	1.00	Horz(CT)	0.09	13	n/a	n/a		
BCDL	10.0	Code	FBC2023/TPI2014	Matrix-MS							Weight: 290 lb	FT = 20%

LUMBER
TOP CHORD 2x4 SP No.2
BOT CHORD 2x4 SP No.2 *Except* B3:2x4 SP No.3
WEBS 2x4 SP No.3

BRACING
TOP CHORD Structural wood sheathing directly applied or 3-9-13 oc purlins, except end verticals.
BOT CHORD Rigid ceiling directly applied or 5-2-6 oc bracing.
WEBS 1 Row at midpt 12-13, 10-15, 6-23

MiTek recommends that Stabilizers and required cross bracing be installed during truss erection, in accordance with Stabilizer Installation guide.

REACTIONS (lb/size) 2=-32/0-6-0, (min. 0-1-8), 13=1272/0-6-0, (min. 0-1-8), 23=2734/0-6-0, (min. 0-3-4)
Max Horiz 2=398 (LC 11)
Max Uplift 2=-289 (LC 26), 13=-672 (LC 8), 23=-1558 (LC 9)
Max Grav 2=215 (LC 10), 13=1278 (LC 26), 23=2734 (LC 1)

FORCES (lb) - Max. Comp./Max. Ten. - All forces 250 (lb) or less except when shown.
TOP CHORD 2-28=-533/897, 3-28=-513/953, 3-4=-637/1162, 4-5=-504/971, 5-29=-640/1137, 6-29=-640/1137, 6-7=-477/328, 7-8=-1114/696, 8-30=-2098/1192, 9-30=-2098/1192, 9-10=-2114/1198, 10-31=-678/415, 11-31=-678/415, 11-12=-660/404, 12-13=-1239/686
BOT CHORD 2-24=-789/638, 23-24=-1155/644, 22-23=-297/466, 21-22=-297/466, 20-21=-671/1114, 19-20=-937/1627, 9-17=-354/308, 16-17=-981/1689, 15-16=-981/1689, 11-15=-296/273
WEBS 3-24=-410/443, 4-24=-558/272, 10-17=-301/548, 10-15=-1353/708, 13-15=-234/255, 12-15=-760/1349, 5-23=-1284/1152, 17-19=-895/1555, 6-21=-418/1026, 6-23=-2041/1067, 7-21=-1187/615, 7-20=-245/655, 8-20=-768/394, 8-17=-413/628, 5-24=-900/839

NOTES
1) Unbalanced roof live loads have been considered for this design.
2) Wind: ASCE 7-22; Vult=160mph (3-second gust) Vasd=124mph; TCDL=6.0psf; BCDL=6.0psf; h=15ft; Cat. II; Exp C; Enclosed; MWFRS (envelope) exterior (2) zone and C-C Zone3 -1-8-0 to 2-7-10, Zone1 2-7-10 to 9-0-0, Zone2 9-0-0 to 15-1-0, Zone1 15-1-0 to 42-10-4 zone; cantilever left and right exposed ; end vertical left and right exposed; porch left exposed;C-C for members and forces & MWFRS for reactions shown; Lumber DOL=1.60 plate grip DOL=1.60
3) Building Designer / Project engineer responsible for verifying applied roof live load shown covers rain loading requirements specific to the use of this truss component.
4) Provide adequate drainage to prevent water ponding.
5) All plates are MT20 plates unless otherwise indicated.
6) This truss has been designed for a 10.0 psf bottom chord live load nonconcurrent with any other live loads.
7) * This truss has been designed for a live load of 20.0psf on the bottom chord in all areas where a rectangle 3-06-00 tall by 2-00-00 wide will fit between the bottom chord and any other members.
8) Provide mechanical connection (by others) of truss to bearing plate capable of withstanding 672 lb uplift at joint 13, 289 lb uplift at joint 2 and 1558 lb uplift at joint 23.

LOAD CASE(S) Standard

Job	Truss	Truss Type	Qty	Ply	
55828	B3	Half Hip	1	1	Job Reference (optional)

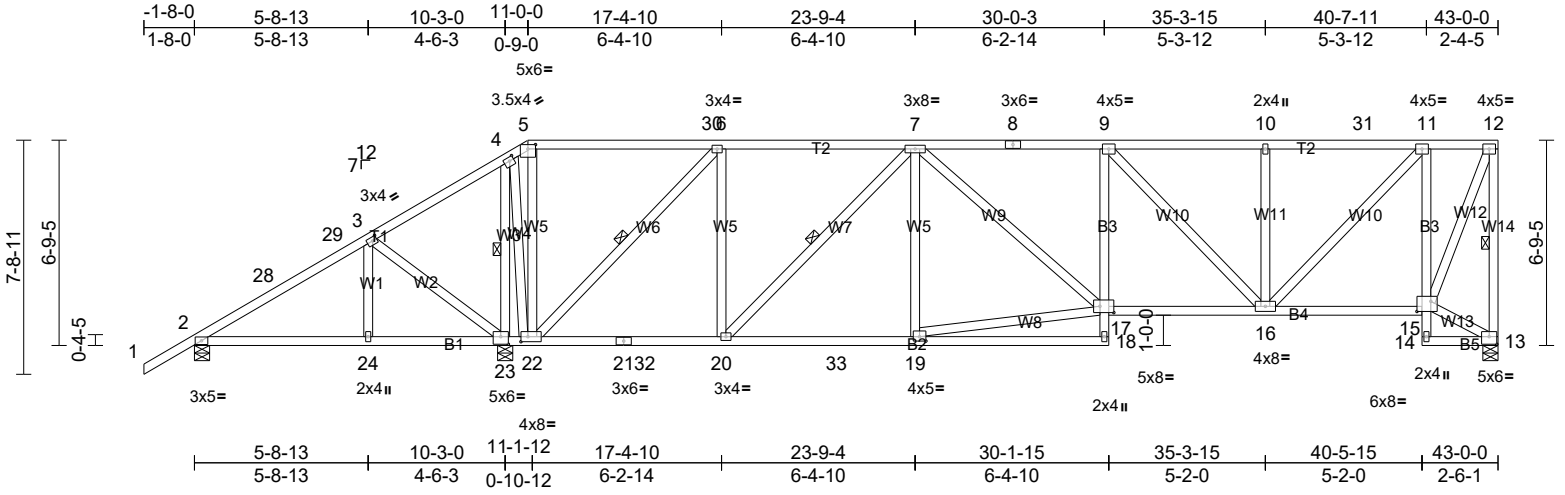

Scale = 1:76.3

Plate Offsets (X, Y): [3:0-1-12,0-1-8], [4:0-1-12,0-1-8], [5:0-3-0,0-1-12], [13:0-3-0,0-3-0], [15:0-5-8,0-4-0], [17:0-5-8,0-2-8], [19:0-2-8,0-1-12], [22:0-2-12,0-2-0], [23:0-3-0,0-3-0]

Loading	(psf)	Spacing	2-0-0	CSI		DEFL	in	(loc)	l/defl	L/d	PLATES	GRIP
TCLL (roof)	20.0	Plate Grip DOL	1.25	TC	0.66	Vert(LL)	0.16	16-17	>999	360	MT20	244/190
TCDL	15.0	Lumber DOL	1.25	BC	0.76	Vert(CT)	-0.26	18-19	>999	240		
BCLL	0.0*	Rep Stress Incr	YES	WB	0.83	Horz(CT)	0.09	13	n/a	n/a		
BCDL	10.0	Code	FBC2023/TPI2014	Matrix-MS							Weight: 306 lb	FT = 20%

LUMBER
TOP CHORD 2x4 SP No.2
BOT CHORD 2x4 SP No.2 *Except* B3:2x4 SP No.3
WEBS 2x4 SP No.3 *Except* W14:2x4 SP No.2

BRACING
TOP CHORD Structural wood sheathing directly applied or 3-10-1 oc purlins, except end verticals.
BOT CHORD Rigid ceiling directly applied or 5-7-15 oc bracing.
WEBS 1 Row at midpt 12-13, 6-22, 7-20, 4-23

MiTek recommends that Stabilizers and required cross bracing be installed during truss erection, in accordance with Stabilizer Installation guide.

REACTIONS (lb/size) 2=205/0-6-0, (min. 0-1-8), 13=1347/0-6-0, (min. 0-1-11), 23=2421/0-6-0, (min. 0-3-2)
Max Horiz 2=478 (LC 11)
Max Uplift 2=-121 (LC 12), 13=-711 (LC 9), 23=-1380 (LC 9)
Max Grav 2=260 (LC 19), 13=1441 (LC 2), 23=2623 (LC 2)

FORCES (lb) - Max. Comp./Max. Ten. - All forces 250 (lb) or less except when shown.
TOP CHORD 2-28=-389/569, 28-29=-375/570, 3-29=-361/616, 3-4=-570/822, 4-5=-323/433, 5-30=-304/409, 6-30=-304/409, 6-7=-939/573, 7-8=-1975/1074, 8-9=-1975/1074, 9-10=-1530/845, 10-31=-1530/845, 11-31=-1530/845, 11-12=-620/376, 12-13=-1390/734
BOT CHORD 2-24=-490/431, 23-24=-490/431, 22-23=-704/508, 21-22=-560/959, 21-32=-560/959, 20-32=-560/959, 20-33=-884/1622, 19-33=-884/1622, 16-17=-1095/1983, 15-16=-414/689, 11-15=-1219/747
WEBS 5-22=-364/339, 6-22=-1937/934, 7-17=-343/469, 9-16=-650/335, 10-16=-372/317, 11-16=-659/1353, 13-15=-281/306, 12-15=-795/1464, 6-20=-265/977, 7-20=-975/468, 17-19=-857/1534, 3-23=-494/588, 4-23=-2084/959, 4-22=-797/1716

NOTES
1) Wind: ASCE 7-22; Vult=160mph (3-second gust) Vasd=124mph; TCDL=6.0psf; BCDL=6.0psf; h=15ft; Cat. II; Exp C; Enclosed; MWFRS (envelope) exterior (2) zone and C-C Zone3 -1-8-0 to 2-7-10, Zone1 2-7-10 to 11-0-0, Zone2 11-0-0 to 17-1-0, Zone1 17-1-0 to 42-10-4 zone; cantilever left and right exposed ; end vertical left and right exposed; porch left exposed;C-C for members and forces & MWFRS for reactions shown; Lumber DOL=1.60 plate grip DOL=1.60
2) Building Designer / Project engineer responsible for verifying applied roof live load shown covers rain loading requirements specific to the use of this truss component.
3) Provide adequate drainage to prevent water ponding.
4) This truss has been designed for a 10.0 psf bottom chord live load nonconcurrent with any other live loads.
5) * This truss has been designed for a live load of 20.0psf on the bottom chord in all areas where a rectangle 3-06-00 tall by 2-00-00 wide will fit between the bottom chord and any other members, with BCDL = 10.0psf.
6) Provide mechanical connection (by others) of truss to bearing plate capable of withstanding 711 lb uplift at joint 13, 121 lb uplift at joint 2 and 1380 lb uplift at joint 23.

LOAD CASE(S) Standard

Job	Truss	Truss Type	Qty	Ply	
55828	B4	Half Hip	1	1	Job Reference (optional)

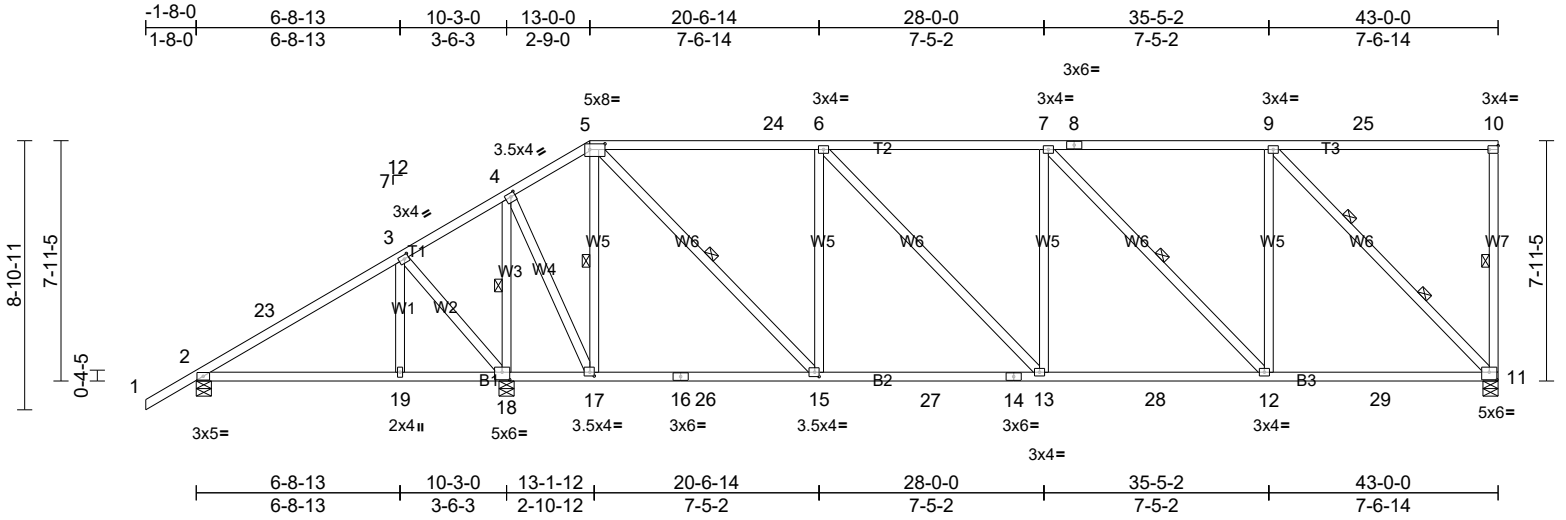

Scale = 1:76.4

Plate Offsets (X, Y): [3:0-1-12,0-1-8], [4:0-1-12,0-1-8], [5:0-6-0,0-2-4], [10:Edge,0-1-8], [11:0-3-0,0-3-0], [15:0-1-12,0-1-12], [17:0-1-12,0-1-8], [18:0-3-0,0-3-0]

Loading	(psf)	Spacing	2-0-0	CSI		DEFL	in	(loc)	l/defl	L/d	PLATES	GRIP
TCLL (roof)	20.0	Plate Grip DOL	1.25	TC	0.83	Vert(LL)	0.14	19-22	>869	360	MT20	244/190
TCDL	15.0	Lumber DOL	1.25	BC	0.81	Vert(CT)	-0.25	13-15	>999	240		
BCLL	0.0*	Rep Stress Incr	YES	WB	0.92	Horz(CT)	0.06	11	n/a	n/a		
BCDL	10.0	Code	FBC2023/TPI2014	Matrix-MS							Weight: 281 lb	FT = 20%

LUMBER
TOP CHORD 2x4 SP No.2
BOT CHORD 2x4 SP No.2
WEBS 2x4 SP No.3 *Except* W7:2x4 SP No.2

BRACING
TOP CHORD Structural wood sheathing directly applied or 3-5-10 oc purlins, except end verticals.
BOT CHORD Rigid ceiling directly applied or 6-0-0 oc bracing.
WEBS 1 Row at midpt 10-11, 5-17, 5-15, 7-12, 4-18
WEBS 2 Rows at 1/3 pts 9-11

MiTek recommends that Stabilizers and required cross bracing be installed during truss erection, in accordance with Stabilizer Installation guide.

REACTIONS (lb/size) 2=416/0-6-0, (min. 0-1-8), 11=1413/0-6-0, (min. 0-1-14), 18=2144/0-6-0, (min. 0-2-14)
Max Horiz 2=559 (LC 11)
Max Uplift 2=-204 (LC 12), 11=-756 (LC 9), 18=-1176 (LC 9)
Max Grav 2=416 (LC 22), 11=1593 (LC 28), 18=2410 (LC 2)

FORCES (lb) - Max. Comp./Max. Ten. - All forces 250 (lb) or less except when shown.
TOP CHORD 2-23=-351/322, 3-23=-318/383, 3-4=-429/510, 4-5=-565/359, 5-24=-1424/777, 6-24=-1424/777, 6-7=-1697/907, 7-8=-1262/716, 8-9=-1262/716, 9-25=-260/273, 10-25=-260/273
BOT CHORD 2-19=-530/250, 18-19=-530/250, 17-18=-452/350, 16-17=-348/535, 16-26=-348/535, 15-26=-348/535, 15-27=-818/1424, 14-27=-818/1424, 13-14=-818/1424, 13-28=-924/1697, 12-28=-924/1697, 12-29=-708/1262, 11-29=-708/1262
WEBS 5-17=-1205/726, 9-11=-1785/844, 6-15=-814/617, 5-15=-739/1544, 6-13=-202/392, 7-12=-623/324, 9-12=-147/790, 3-18=-556/618, 3-19=-283/266, 4-18=-1970/875, 4-17=-718/1626

NOTES
1) Unbalanced roof live loads have been considered for this design.
2) Wind: ASCE 7-22; Vult=160mph (3-second gust) Vasd=124mph; TCDL=6.0psf; BCDL=6.0psf; h=15ft; Cat. II; Exp C; Enclosed; MWFRS (envelope) exterior (2) zone and C-C Zone3 -1-8-0 to 2-7-10, Zone1 2-7-10 to 13-0-0, Zone2 13-0-0 to 19-1-0, Zone1 19-1-0 to 42-10-4 zone; cantilever left and right exposed ; end vertical left and right exposed; porch left exposed;C-C for members and forces & MWFRS for reactions shown; Lumber DOL=1.60 plate grip DOL=1.60
3) Building Designer / Project engineer responsible for verifying applied roof live load shown covers rain loading requirements specific to the use of this truss component.
4) Provide adequate drainage to prevent water ponding.
5) This truss has been designed for a 10.0 psf bottom chord live load nonconcurrent with any other live loads.
6) * This truss has been designed for a live load of 20.0psf on the bottom chord in all areas where a rectangle 3-06-00 tall by 2-00-00 wide will fit between the bottom chord and any other members, with BCDL = 10.0psf.
7) Provide mechanical connection (by others) of truss to bearing plate capable of withstanding 756 lb uplift at joint 11, 204 lb uplift at joint 2 and 1176 lb uplift at joint 18.

LOAD CASE(S) Standard

Job	Truss	Truss Type	Qty	Ply	
55828	B5	Half Hip	1	1	Job Reference (optional)

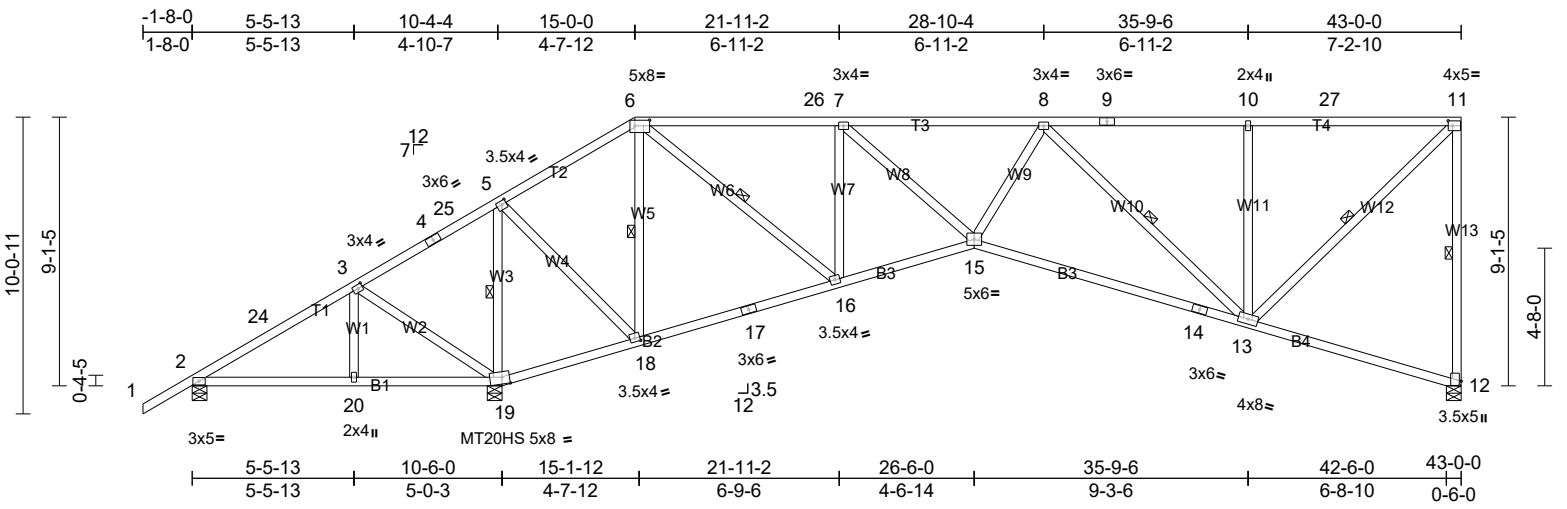

Scale = 1:78.4

Plate Offsets (X, Y): [3:0-1-12,0-1-8], [5:0-1-12,0-1-8], [6:0-6-0,0-2-4], [11:0-1-12,0-2-0], [12:0-1-12,0-0-12], [18:0-2-0,0-1-8], [19:0-3-0,0-2-12]

Loading	(psf)	Spacing	2-0-0	CSI		DEFL	in	(loc)	l/defl	L/d	PLATES	GRIP
TCLL (roof)	20.0	Plate Grip DOL	1.25	TC	0.70	Vert(LL)	-0.24	13-15	>999	360	MT20	244/190
TCDL	15.0	Lumber DOL	1.25	BC	0.97	Vert(CT)	-0.55	13-15	>712	240	MT20HS	187/143
BCLL	0.0*	Rep Stress Incr	YES	WB	0.79	Horz(CT)	0.16	12	n/a	n/a		
BCDL	10.0	Code	FBC2023/TPI2014	Matrix-MS							Weight: 265 lb	FT = 20%

LUMBER

TOP CHORD 2x4 SP No.2
BOT CHORD 2x4 SP No.2
WEBS 2x4 SP No.3 *Except* W13:2x4 SP 2250F 1.8E

BRACING

TOP CHORD Structural wood sheathing directly applied or 3-7-7 oc purlins, except end verticals.
BOT CHORD Rigid ceiling directly applied or 2-2-0 oc bracing.
WEBS 1 Row at midpt 11-12, 5-19, 6-18, 6-16, 8-13, 11-13

MiTek recommends that Stabilizers and required cross bracing be installed during truss erection, in accordance with Stabilizer Installation guide.

REACTIONS (lb/size) 2=-99/0-6-0, (min. 0-1-8), 12=1230/0-6-0, (min. 0-1-8), 19=2842/0-6-0, (min. 0-3-6)
Max Horiz 2=645 (LC 11)
Max Uplift 2=-343 (LC 26), 12=-648 (LC 9), 19=-1580 (LC 9)
Max Grav 2=291 (LC 13), 12=1230 (LC 1), 19=2842 (LC 1)

FORCES (lb) - Max. Comp./Max. Ten. - All forces 250 (lb) or less except when shown.

TOP CHORD 2-24=-840/1320, 3-24=-830/1364, 3-4=-1077/1532, 4-25=-1061/1565, 5-25=-1050/1598, 5-6=-295/248, 6-26=-1170/678, 7-26=-1170/678, 7-8=-1934/1023, 8-9=-1083/628, 9-10=-1083/628, 10-27=-1083/628, 11-27=-1083/628, 11-12=-1180/703
BOT CHORD 2-20=-856/615, 19-20=-856/615, 18-19=-1269/696, 17-18=-356/368, 16-17=-336/378, 15-16=-887/1475, 14-15=-1259/2052, 13-14=-1277/2005, 12-13=-284/320
WEBS 3-20=-261/250, 3-19=-510/584, 5-19=-2138/1199, 5-18=-920/1647, 6-18=-1365/914, 6-16=-915/1572, 7-16=-1223/844, 7-15=-590/1046, 8-15=-152/467, 8-13=-1099/725, 10-13=-542/485, 11-13=-775/1393

NOTES

1) Unbalanced roof live loads have been considered for this design.
2) Wind: ASCE 7-22; Vult=160mph (3-second gust) Vasd=124mph; TCDL=6.0psf; BCDL=6.0psf; h=15ft; Cat. II; Exp C; Enclosed; MWFRS (envelope) exterior (2) zone and C-C Zone3 -1-8-0 to 2-7-10, Zone1 2-7-10 to 15-0-0, Zone2 15-0-0 to 21-1-0, Zone1 21-1-0 to 42-10-4 zone; cantilever left and right exposed ; end vertical left and right exposed; porch left exposed;C-C for members and forces & MWFRS for reactions shown; Lumber DOL=1.60 plate grip DOL=1.60
3) Building Designer / Project engineer responsible for verifying applied roof live load shown covers rain loading requirements specific to the use of this truss component.
4) Provide adequate drainage to prevent water ponding.
5) All plates are MT20 plates unless otherwise indicated.
6) This truss has been designed for a 10.0 psf bottom chord live load nonconcurrent with any other live loads.
7) * This truss has been designed for a live load of 20.0psf on the bottom chord in all areas where a rectangle 3-06-00 tall by 2-00-00 wide will fit between the bottom chord and any other members.
8) Bearing at joint(s) 12 considers parallel to grain value using ANSI/TPI 1 angle to grain formula. Building designer should verify capacity of bearing surface.
9) Provide mechanical connection (by others) of truss to bearing plate capable of withstanding 648 lb uplift at joint 12, 343 lb uplift at joint 2 and 1580 lb uplift at joint 19.

LOAD CASE(S) Standard

Job	Truss	Truss Type	Qty	Ply	
55828	B6	Half Hip	1	1	Job Reference (optional)

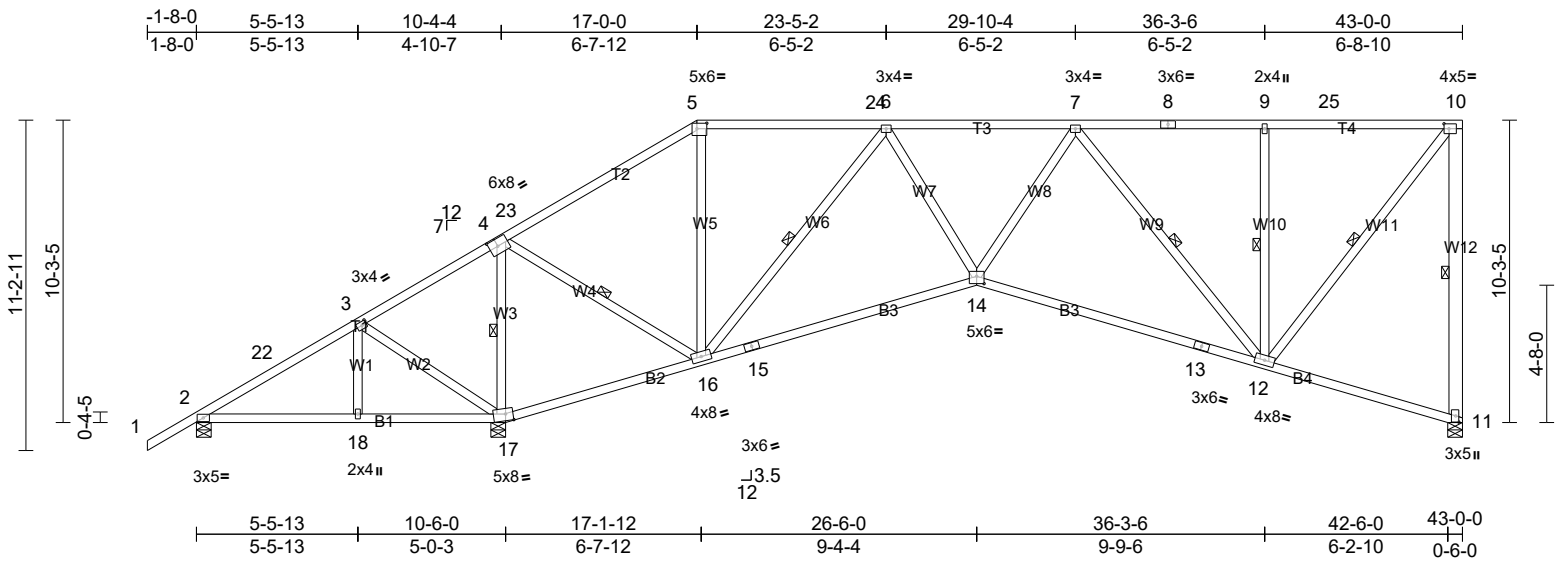

Scale = 1:78.6

Plate Offsets (X, Y): [3:0-1-12,0-1-8], [4:0-3-8,0-3-0], [5:0-4-0,0-2-4], [10:0-2-0,0-2-0], [11:0-2-8,0-1-4], [14:0-3-0,0-3-0], [17:0-3-0,0-2-12]

Loading	(psf)	Spacing	2-0-0	CSI		DEFL	in	(loc)	l/defl	L/d	PLATES	GRIP
TCLL (roof)	20.0	Plate Grip DOL	1.25	TC	0.86	Vert(LL)	-0.26	12-14	>999	360	MT20	244/190
TCDL	15.0	Lumber DOL	1.25	BC	0.93	Vert(CT)	-0.57	12-14	>679	240		
BCLL	0.0*	Rep Stress Incr	YES	WB	0.77	Horz(CT)	0.14	11	n/a	n/a		
BCDL	10.0	Code	FBC2023/TPI2014	Matrix-MS							Weight: 278 lb	FT = 20%

LUMBER
TOP CHORD 2x4 SP No.2
BOT CHORD 2x4 SP No.2
WEBS 2x4 SP No.3 *Except* W12:2x6 SP No.2

BRACING
TOP CHORD Structural wood sheathing directly applied or 4-1-15 oc purlins, except end verticals.
BOT CHORD Rigid ceiling directly applied or 2-2-0 oc bracing.
WEBS 1 Row at midpt 10-11, 4-17, 4-16, 6-16, 7-12, 9-12, 10-12

MiTek recommends that Stabilizers and required cross bracing be installed during truss erection, in accordance with Stabilizer Installation guide.

REACTIONS (lb/size) 2=62/0-6-0, (min. 0-1-8), 11=1278/0-6-0, (min. 0-1-8), 17=2626/0-6-0, (min. 0-3-2)
Max Horiz 2=725 (LC 11)
Max Uplift 2=-177 (LC 26), 11=-680 (LC 9), 17=-1416 (LC 9)
Max Grav 2=269 (LC 17), 11=1278 (LC 1), 17=2626 (LC 1)

FORCES (lb) - Max. Comp./Max. Ten. - All forces 250 (lb) or less except when shown.
TOP CHORD 2-22=-716/1089, 3-22=-706/1132, 3-4=-1017/1342, 4-23=-721/341, 5-23=-666/378, 5-24=-625/430, 6-24=-625/430, 6-7=-1664/864, 7-8=-962/547, 8-9=-962/547, 9-25=-962/547, 10-25=-962/547, 10-11=-1236/738
BOT CHORD 2-18=-621/486, 17-18=-621/486, 16-17=-1024/578, 15-16=-1037/1639, 14-15=-1020/1686, 13-14=-1085/1779, 12-13=-1103/1730, 11-12=-315/355
WEBS 3-18=-268/246, 3-17=-461/537, 4-17=-2007/1206, 4-16=-884/1619, 5-16=-207/313, 6-16=-1422/902, 6-14=-351/769, 7-14=-233/556, 7-12=-1042/688, 9-12=-491/439, 10-12=-743/1324

NOTES
1) Unbalanced roof live loads have been considered for this design.
2) Wind: ASCE 7-22; Vult=160mph (3-second gust) Vasd=124mph; TCDL=6.0psf; BCDL=6.0psf; h=15ft; Cat. II; Exp C; Enclosed; MWFRS (envelope) exterior (2) zone and C-C Zone3 -1-8-0 to 2-7-10, Zone1 2-7-10 to 17-0-0, Zone2 17-0-0 to 23-1-0, Zone1 23-1-0 to 42-9-4 zone; cantilever left and right exposed ; end vertical left and right exposed; porch left exposed;C-C for members and forces & MWFRS for reactions shown; Lumber DOL=1.60 plate grip DOL=1.60
3) Building Designer / Project engineer responsible for verifying applied roof live load shown covers rain loading requirements specific to the use of this truss component.
4) Provide adequate drainage to prevent water ponding.
5) This truss has been designed for a 10.0 psf bottom chord live load nonconcurrent with any other live loads.
6) * This truss has been designed for a live load of 20.0psf on the bottom chord in all areas where a rectangle 3-06-00 tall by 2-00-00 wide will fit between the bottom chord and any other members.
7) Bearing at joint(s) 11 considers parallel to grain value using ANSI/TPI 1 angle to grain formula. Building designer should verify capacity of bearing surface.
8) Provide mechanical connection (by others) of truss to bearing plate capable of withstanding 680 lb uplift at joint 11, 177 lb uplift at joint 2 and 1416 lb uplift at joint 17.

LOAD CASE(S) Standard

Job	Truss	Truss Type	Qty	Ply	
55828	B7	Piggyback Base	1	1	Job Reference (optional)

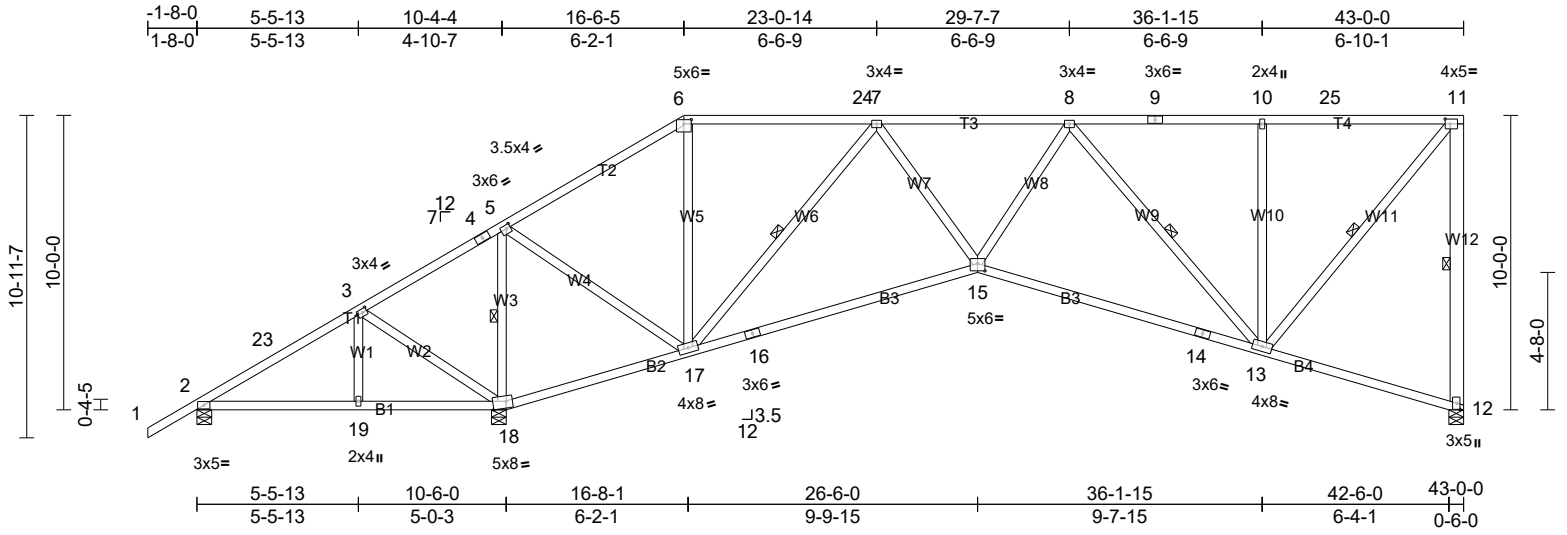

Scale = 1:78.5

Plate Offsets (X, Y): [3:0-1-12,0-1-8], [5:0-1-12,0-1-8], [6:0-3-0,0-1-12], [11:0-2-0,0-2-0], [12:0-2-8,0-1-4], [15:0-3-0,0-3-0], [18:0-5-8,Edge]

Loading	(psf)	Spacing	2-0-0	CSI		DEFL	in	(loc)	l/defl	L/d	PLATES	GRIP
TCLL (roof)	20.0	Plate Grip DOL	1.25	TC	0.80	Vert(LL)	-0.26	15-17	>999	360	MT20	244/190
TCDL	15.0	Lumber DOL	1.25	BC	0.92	Vert(CT)	-0.58	15-17	>669	240		
BCLL	0.0*	Rep Stress Incr	YES	WB	0.96	Horz(CT)	0.14	12	n/a	n/a		
BCDL	10.0	Code	FBC2023/TPI2014	Matrix-MS							Weight: 275 lb	FT = 20%

LUMBER
TOP CHORD 2x4 SP No.2
BOT CHORD 2x4 SP No.2
WEBS 2x4 SP No.3 *Except* W12:2x6 SP No.2

BRACING
TOP CHORD Structural wood sheathing directly applied or 4-0-9 oc purlins, except end verticals.
BOT CHORD Rigid ceiling directly applied or 2-2-0 oc bracing.
WEBS 1 Row at midpt 11-12, 5-18, 7-17, 8-13, 11-13

MiTek recommends that Stabilizers and required cross bracing be installed during truss erection, in accordance with Stabilizer Installation guide.

REACTIONS (lb/size) 2=20/0-6-0, (min. 0-1-8), 12=1264/0-6-0, (min. 0-1-8), 18=2683/0-6-0, (min. 0-3-3)
Max Horiz 2=706 (LC 11)
Max Uplift 2=-220 (LC 26), 12=-671 (LC 9), 18=-1458 (LC 9)
Max Grav 2=263 (LC 13), 12=1264 (LC 1), 18=2683 (LC 1)

FORCES (lb) - Max. Comp./Max. Ten. - All forces 250 (lb) or less except when shown.
TOP CHORD 2-23=-749/1150, 3-23=-739/1193, 3-4=-1040/1407, 4-5=-1013/1417, 5-6=-631/346, 6-24=-546/380, 7-24=-546/380, 7-8=-1710/889, 8-9=-983/555, 9-10=-983/555, 10-25=-983/555, 11-25=-983/555, 11-12=-1220/730
BOT CHORD 2-19=-668/518, 18-19=-668/518, 17-18=-1046/598, 16-17=-1012/1584, 15-16=-995/1633, 14-15=-1116/1830, 13-14=-1134/1781, 12-13=-308/347
WEBS 3-19=-265/250, 3-18=-486/557, 5-18=-2051/1204, 5-17=-872/1599, 6-17=-243/322, 7-17=-1490/949, 7-15=-387/831, 8-15=-209/531, 8-13=-1049/689, 10-13=-500/445, 11-13=-745/1329

NOTES

1) Unbalanced roof live loads have been considered for this design.
2) Wind: ASCE 7-22; Vult=160mph (3-second gust) Vasd=124mph; TCDL=6.0psf; BCDL=6.0psf; h=15ft; Cat. II; Exp C; Enclosed; MWFRS (envelope) exterior (2) zone and C-C Zone3 -1-8-0 to 2-7-10, Zone1 2-7-10 to 16-6-5, Zone2 16-6-5 to 22-7-5, Zone1 22-7-5 to 42-9-4 zone; cantilever left and right exposed ; end vertical left and right exposed; porch left exposed;C-C for members and forces & MWFRS for reactions shown; Lumber DOL=1.60 plate grip DOL=1.60
3) Building Designer / Project engineer responsible for verifying applied roof live load shown covers rain loading requirements specific to the use of this truss component.
4) Provide adequate drainage to prevent water ponding.
5) This truss has been designed for a 10.0 psf bottom chord live load nonconcurrent with any other live loads.
6) * This truss has been designed for a live load of 20.0psf on the bottom chord in all areas where a rectangle 3-06-00 tall by 2-00-00 wide will fit between the bottom chord and any other members.
7) Bearing at joint(s) 12 considers parallel to grain value using ANSI/TPI 1 angle to grain formula. Building designer should verify capacity of bearing surface.
8) Provide mechanical connection (by others) of truss to bearing plate capable of withstanding 671 lb uplift at joint 12, 220 lb uplift at joint 2 and 1458 lb uplift at joint 18.

LOAD CASE(S) Standard

Job	Truss	Truss Type	Qty	Ply	
55828	B8	Piggyback Base	1	1	Job Reference (optional)

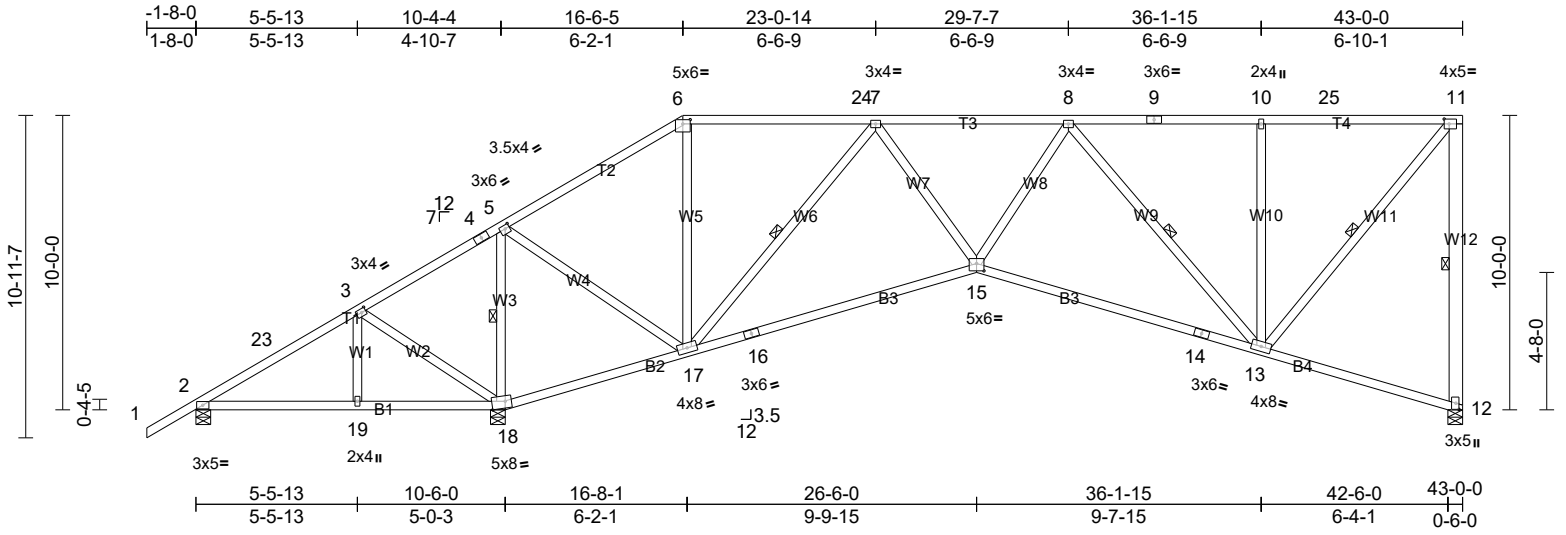

Scale = 1:78.5

Plate Offsets (X, Y): [3:0-1-12,0-1-8], [5:0-1-12,0-1-8], [6:0-3-0,0-1-12], [11:0-2-0,0-2-0], [12:0-2-8,0-1-4], [15:0-3-0,0-3-0], [18:0-5-8,Edge]

Loading	(psf)	Spacing	2-0-0	CSI		DEFL	in	(loc)	l/defl	L/d	PLATES	GRIP
TCLL (roof)	20.0	Plate Grip DOL	1.25	TC	0.80	Vert(LL)	-0.26	15-17	>999	360	MT20	244/190
TCDL	15.0	Lumber DOL	1.25	BC	0.92	Vert(CT)	-0.58	15-17	>669	240		
BCLL	0.0*	Rep Stress Incr	YES	WB	0.96	Horz(CT)	0.14	12	n/a	n/a		
BCDL	10.0	Code	FBC2023/TPI2014	Matrix-MS							Weight: 275 lb	FT = 20%

LUMBER
TOP CHORD 2x4 SP No.2
BOT CHORD 2x4 SP No.2
WEBS 2x4 SP No.3 *Except* W12:2x6 SP No.2

BRACING
TOP CHORD Structural wood sheathing directly applied or 4-0-9 oc purlins, except end verticals.
BOT CHORD Rigid ceiling directly applied or 2-2-0 oc bracing.
WEBS 1 Row at midpt 11-12, 5-18, 7-17, 8-13, 11-13

MiTek recommends that Stabilizers and required cross bracing be installed during truss erection, in accordance with Stabilizer Installation guide.

REACTIONS (lb/size) 2=20/0-6-0, (min. 0-1-8), 12=1264/0-6-0, (min. 0-1-8), 18=2683/0-6-0, (min. 0-3-3)
Max Horiz 2=706 (LC 11)
Max Uplift 2=-220 (LC 26), 12=-671 (LC 9), 18=-1458 (LC 9)
Max Grav 2=263 (LC 13), 12=1264 (LC 1), 18=2683 (LC 1)

FORCES (lb) - Max. Comp./Max. Ten. - All forces 250 (lb) or less except when shown.
TOP CHORD 2-23=-749/1150, 3-23=-739/1193, 3-4=-1040/1407, 4-5=-1013/1417, 5-6=-631/346, 6-24=-546/380, 7-24=-546/380, 7-8=-1710/889, 8-9=-983/555, 9-10=-983/555, 10-25=-983/555, 11-25=-983/555, 11-12=-1220/730
BOT CHORD 2-19=-668/518, 18-19=-668/518, 17-18=-1046/598, 16-17=-1012/1584, 15-16=-995/1633, 14-15=-1116/1830, 13-14=-1134/1781, 12-13=-308/347
WEBS 3-19=-265/250, 3-18=-486/557, 5-18=-2051/1204, 5-17=-872/1599, 6-17=-243/322, 7-17=-1490/949, 7-15=-387/831, 8-15=-209/531, 8-13=-1049/689, 10-13=-500/445, 11-13=-745/1329

NOTES

1) Unbalanced roof live loads have been considered for this design.
2) Wind: ASCE 7-22; Vult=160mph (3-second gust) Vasd=124mph; TCDL=6.0psf; BCDL=6.0psf; h=15ft; Cat. II; Exp C; Enclosed; MWFRS (envelope) exterior (2) zone and C-C Zone3 -1-8-0 to 2-7-10, Zone1 2-7-10 to 16-6-5, Zone2 16-6-5 to 22-7-5, Zone1 22-7-5 to 42-9-4 zone; cantilever left and right exposed ; end vertical left and right exposed; porch left exposed;C-C for members and forces & MWFRS for reactions shown; Lumber DOL=1.60 plate grip DOL=1.60
3) Building Designer / Project engineer responsible for verifying applied roof live load shown covers rain loading requirements specific to the use of this truss component.
4) Provide adequate drainage to prevent water ponding.
5) This truss has been designed for a 10.0 psf bottom chord live load nonconcurrent with any other live loads.
6) * This truss has been designed for a live load of 20.0psf on the bottom chord in all areas where a rectangle 3-06-00 tall by 2-00-00 wide will fit between the bottom chord and any other members.
7) Bearing at joint(s) 12 considers parallel to grain value using ANSI/TPI 1 angle to grain formula. Building designer should verify capacity of bearing surface.
8) Provide mechanical connection (by others) of truss to bearing plate capable of withstanding 671 lb uplift at joint 12, 220 lb uplift at joint 2 and 1458 lb uplift at joint 18.

LOAD CASE(S) Standard

Job	Truss	Truss Type	Qty	Ply	
55828	B9	Piggyback Base	2	1	Job Reference (optional)

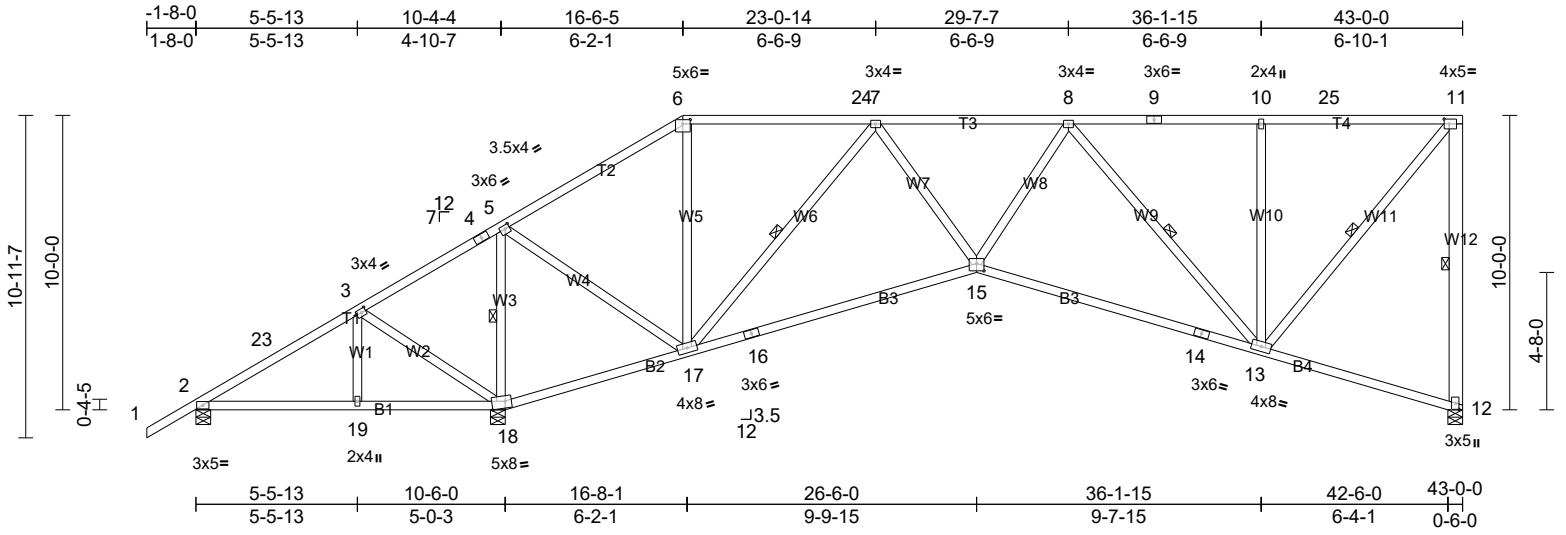

Scale = 1:78.5

Plate Offsets (X, Y): [3:0-1-12,0-1-8], [5:0-1-12,0-1-8], [6:0-3-0,0-1-12], [11:0-2-0,0-2-0], [12:0-2-8,0-1-4], [15:0-3-0,0-3-0], [18:0-5-8,Edge]

Loading	(psf)	Spacing	2-0-0	CSI		DEFL	in	(loc)	l/defl	L/d	PLATES	GRIP
TCLL (roof)	20.0	Plate Grip DOL	1.25	TC	0.80	Vert(LL)	-0.26	15-17	>999	360	MT20	244/190
TCDL	15.0	Lumber DOL	1.25	BC	0.92	Vert(CT)	-0.58	15-17	>669	240		
BCLL	0.0*	Rep Stress Incr	YES	WB	0.96	Horz(CT)	0.14	12	n/a	n/a		
BCDL	10.0	Code	FBC2023/TPI2014	Matrix-MS							Weight: 275 lb	FT = 20%

LUMBER
TOP CHORD 2x4 SP No.2
BOT CHORD 2x4 SP No.2
WEBS 2x4 SP No.3 *Except* W12:2x6 SP No.2

BRACING
TOP CHORD Structural wood sheathing directly applied or 4-0-9 oc purlins, except end verticals.
BOT CHORD Rigid ceiling directly applied or 2-2-0 oc bracing.
WEBS 1 Row at midpt 11-12, 5-18, 7-17, 8-13, 11-13

MiTek recommends that Stabilizers and required cross bracing be installed during truss erection, in accordance with Stabilizer Installation guide.

REACTIONS (lb/size) 2=20/0-6-0, (min. 0-1-8), 12=1264/0-6-0, (min. 0-1-8), 18=2683/0-6-0, (min. 0-3-3)
Max Horiz 2=706 (LC 11)
Max Uplift 2=-220 (LC 26), 12=-671 (LC 9), 18=-1458 (LC 9)
Max Grav 2=263 (LC 13), 12=1264 (LC 1), 18=2683 (LC 1)

FORCES (lb) - Max. Comp./Max. Ten. - All forces 250 (lb) or less except when shown.
TOP CHORD 2-23=-749/1150, 3-23=-739/1193, 3-4=-1040/1407, 4-5=-1013/1417, 5-6=-631/346, 6-24=-546/380, 7-24=-546/380, 7-8=-1710/889, 8-9=-983/555, 9-10=-983/555, 10-25=-983/555, 11-25=-983/555, 11-12=-1220/730
BOT CHORD 2-19=-668/518, 18-19=-668/518, 17-18=-1046/598, 16-17=-1012/1584, 15-16=-995/1633, 14-15=-1116/1830, 13-14=-1134/1781, 12-13=-308/347
WEBS 3-19=-265/250, 3-18=-486/557, 5-18=-2051/1204, 5-17=-872/1599, 6-17=-243/322, 7-17=-1490/949, 7-15=-387/831, 8-15=-209/531, 8-13=-1049/689, 10-13=-500/445, 11-13=-745/1329

NOTES

1) Unbalanced roof live loads have been considered for this design.
2) Wind: ASCE 7-22; Vult=160mph (3-second gust) Vasd=124mph; TCDL=6.0psf; BCDL=6.0psf; h=15ft; Cat. II; Exp C; Enclosed; MWFRS (envelope) exterior (2) zone and C-C Zone3 -1-8-0 to 2-7-10, Zone1 2-7-10 to 16-6-5, Zone2 16-6-5 to 22-7-5, Zone1 22-7-5 to 42-9-4 zone; cantilever left and right exposed ; end vertical left and right exposed; porch left exposed;C-C for members and forces & MWFRS for reactions shown; Lumber DOL=1.60 plate grip DOL=1.60
3) Building Designer / Project engineer responsible for verifying applied roof live load shown covers rain loading requirements specific to the use of this truss component.
4) Provide adequate drainage to prevent water ponding.
5) This truss has been designed for a 10.0 psf bottom chord live load nonconcurrent with any other live loads.
6) * This truss has been designed for a live load of 20.0psf on the bottom chord in all areas where a rectangle 3-06-00 tall by 2-00-00 wide will fit between the bottom chord and any other members.
7) Bearing at joint(s) 12 considers parallel to grain value using ANSI/TPI 1 angle to grain formula. Building designer should verify capacity of bearing surface.
8) Provide mechanical connection (by others) of truss to bearing plate capable of withstanding 671 lb uplift at joint 12, 220 lb uplift at joint 2 and 1458 lb uplift at joint 18.

LOAD CASE(S) Standard

Job	Truss	Truss Type	Qty	Ply	
55828	B10	Piggyback Base	2	1	Job Reference (optional)

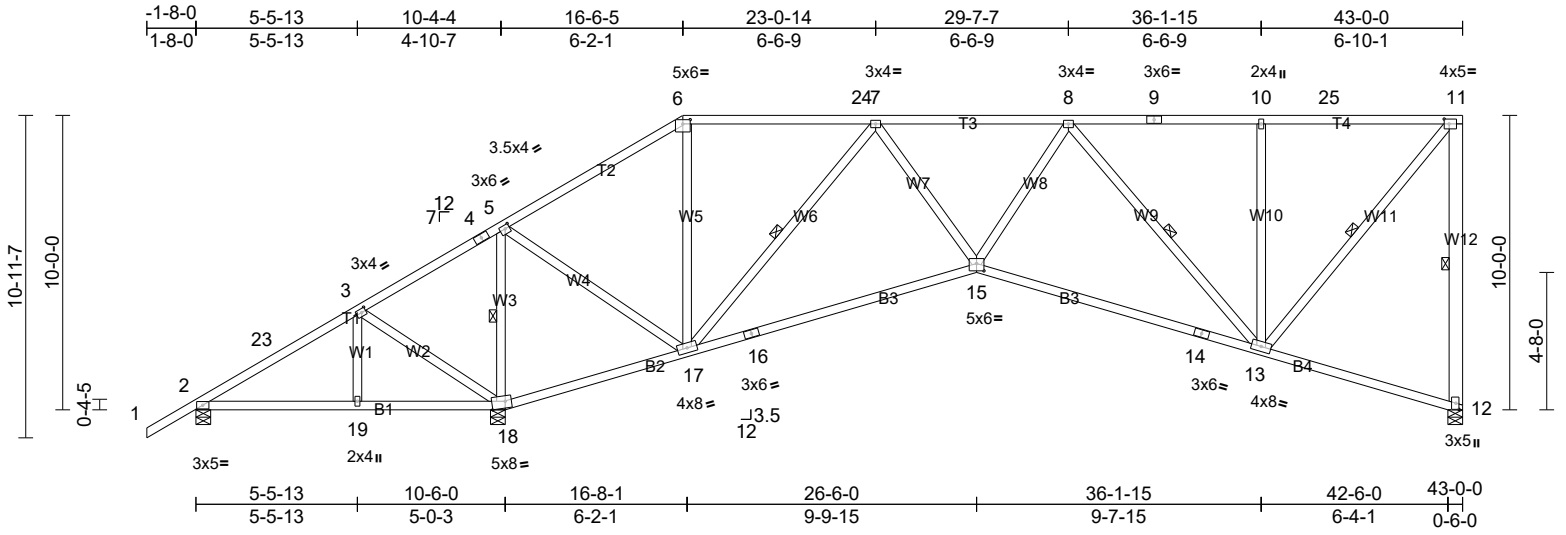

Scale = 1:78.5

Plate Offsets (X, Y): [3:0-1-12,0-1-8], [5:0-1-12,0-1-8], [6:0-3-0,0-1-12], [11:0-2-0,0-2-0], [12:0-2-8,0-1-4], [15:0-3-0,0-3-0], [18:0-5-8,Edge]

Loading	(psf)	Spacing	2-0-0	CSI		DEFL	in	(loc)	l/defl	L/d	PLATES	GRIP
TCLL (roof)	20.0	Plate Grip DOL	1.25	TC	0.80	Vert(LL)	-0.26	15-17	>999	360	MT20	244/190
TCDL	15.0	Lumber DOL	1.25	BC	0.92	Vert(CT)	-0.58	15-17	>669	240		
BCLL	0.0*	Rep Stress Incr	YES	WB	0.96	Horz(CT)	0.14	12	n/a	n/a		
BCDL	10.0	Code	FBC2023/TPI2014	Matrix-MS							Weight: 275 lb	FT = 20%

LUMBER
TOP CHORD 2x4 SP No.2
BOT CHORD 2x4 SP No.2
WEBS 2x4 SP No.3 *Except* W12:2x6 SP No.2

BRACING
TOP CHORD Structural wood sheathing directly applied or 4-0-9 oc purlins, except end verticals.
BOT CHORD Rigid ceiling directly applied or 2-2-0 oc bracing.
WEBS 1 Row at midpt 11-12, 5-18, 7-17, 8-13, 11-13

MiTek recommends that Stabilizers and required cross bracing be installed during truss erection, in accordance with Stabilizer Installation guide.

REACTIONS (lb/size) 2=20/0-6-0, (min. 0-1-8), 12=1264/0-6-0, (min. 0-1-8), 18=2683/0-6-0, (min. 0-3-3)
Max Horiz 2=706 (LC 11)
Max Uplift 2=-220 (LC 26), 12=-671 (LC 9), 18=-1458 (LC 9)
Max Grav 2=263 (LC 13), 12=1264 (LC 1), 18=2683 (LC 1)

FORCES (lb) - Max. Comp./Max. Ten. - All forces 250 (lb) or less except when shown.
TOP CHORD 2-23=-749/1150, 3-23=-739/1193, 3-4=-1040/1407, 4-5=-1013/1417, 5-6=-631/346, 6-24=-546/380, 7-24=-546/380, 7-8=-1710/889, 8-9=-983/555, 9-10=-983/555, 10-25=-983/555, 11-25=-983/555, 11-12=-1220/730
BOT CHORD 2-19=-668/518, 18-19=-668/518, 17-18=-1046/598, 16-17=-1012/1584, 15-16=-995/1633, 14-15=-1116/1830, 13-14=-1134/1781, 12-13=-308/347
WEBS 3-19=-265/250, 3-18=-486/557, 5-18=-2051/1204, 5-17=-872/1599, 6-17=-243/322, 7-17=-1490/949, 7-15=-387/831, 8-15=-209/531, 8-13=-1049/689, 10-13=-500/445, 11-13=-745/1329

NOTES

1) Unbalanced roof live loads have been considered for this design.
2) Wind: ASCE 7-22; Vult=160mph (3-second gust) Vasd=124mph; TCDL=6.0psf; BCDL=6.0psf; h=15ft; Cat. II; Exp C; Enclosed; MWFRS (envelope) exterior (2) zone and C-C Zone3 -1-8-0 to 2-7-10, Zone1 2-7-10 to 16-6-5, Zone2 16-6-5 to 22-7-5, Zone1 22-7-5 to 42-9-4 zone; cantilever left and right exposed ; end vertical left and right exposed; porch left exposed;C-C for members and forces & MWFRS for reactions shown; Lumber DOL=1.60 plate grip DOL=1.60
3) Building Designer / Project engineer responsible for verifying applied roof live load shown covers rain loading requirements specific to the use of this truss component.
4) Provide adequate drainage to prevent water ponding.
5) This truss has been designed for a 10.0 psf bottom chord live load nonconcurrent with any other live loads.
6) * This truss has been designed for a live load of 20.0psf on the bottom chord in all areas where a rectangle 3-06-00 tall by 2-00-00 wide will fit between the bottom chord and any other members.
7) Bearing at joint(s) 12 considers parallel to grain value using ANSI/TPI 1 angle to grain formula. Building designer should verify capacity of bearing surface.
8) Provide mechanical connection (by others) of truss to bearing plate capable of withstanding 671 lb uplift at joint 12, 220 lb uplift at joint 2 and 1458 lb uplift at joint 18.

LOAD CASE(S) Standard

Job	Truss	Truss Type	Qty	Ply	
55828	B11	Piggyback Base	2	1	Job Reference (optional)

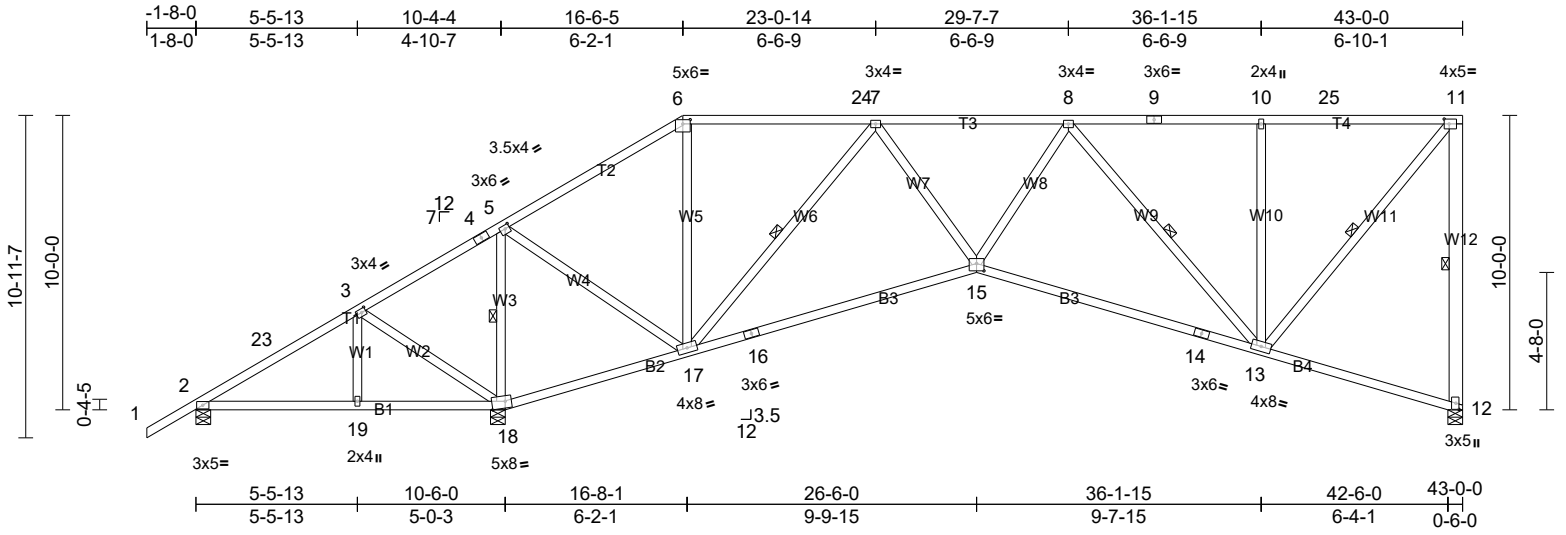

Scale = 1:78.5

Plate Offsets (X, Y): [3:0-1-12,0-1-8], [5:0-1-12,0-1-8], [6:0-3-0,0-1-12], [11:0-2-0,0-2-0], [12:0-2-8,0-1-4], [15:0-3-0,0-3-0], [18:0-5-8,Edge]

Loading	(psf)	Spacing	2-0-0	CSI		DEFL	in	(loc)	l/defl	L/d	PLATES	GRIP
TCLL (roof)	20.0	Plate Grip DOL	1.25	TC	0.80	Vert(LL)	-0.26	15-17	>999	360	MT20	244/190
TCDL	15.0	Lumber DOL	1.25	BC	0.92	Vert(CT)	-0.58	15-17	>669	240		
BCLL	0.0*	Rep Stress Incr	YES	WB	0.96	Horz(CT)	0.14	12	n/a	n/a		
BCDL	10.0	Code	FBC2023/TPI2014	Matrix-MS							Weight: 275 lb	FT = 20%

LUMBER
TOP CHORD 2x4 SP No.2
BOT CHORD 2x4 SP No.2
WEBS 2x4 SP No.3 *Except* W12:2x6 SP No.2

BRACING
TOP CHORD Structural wood sheathing directly applied or 4-0-9 oc purlins, except end verticals.
BOT CHORD Rigid ceiling directly applied or 2-2-0 oc bracing.
WEBS 1 Row at midpt 11-12, 5-18, 7-17, 8-13, 11-13

MiTek recommends that Stabilizers and required cross bracing be installed during truss erection, in accordance with Stabilizer Installation guide.

REACTIONS (lb/size) 2=20/0-6-0, (min. 0-1-8), 12=1264/0-6-0, (min. 0-1-8), 18=2683/0-6-0, (min. 0-3-3)
Max Horiz 2=706 (LC 11)
Max Uplift 2=-220 (LC 26), 12=-671 (LC 9), 18=-1458 (LC 9)
Max Grav 2=263 (LC 13), 12=1264 (LC 1), 18=2683 (LC 1)

FORCES (lb) - Max. Comp./Max. Ten. - All forces 250 (lb) or less except when shown.
TOP CHORD 2-23=-749/1150, 3-23=-739/1193, 3-4=-1040/1407, 4-5=-1013/1417, 5-6=-631/346, 6-24=-546/380, 7-24=-546/380, 7-8=-1710/889, 8-9=-983/555, 9-10=-983/555, 10-25=-983/555, 11-25=-983/555, 11-12=-1220/730
BOT CHORD 2-19=-668/518, 18-19=-668/518, 17-18=-1046/598, 16-17=-1012/1584, 15-16=-995/1633, 14-15=-1116/1830, 13-14=-1134/1781, 12-13=-308/347
WEBS 3-19=-265/250, 3-18=-486/557, 5-18=-2051/1204, 5-17=-872/1599, 6-17=-243/322, 7-17=-1490/949, 7-15=-387/831, 8-15=-209/531, 8-13=-1049/689, 10-13=-500/445, 11-13=-745/1329

NOTES

1) Unbalanced roof live loads have been considered for this design.
2) Wind: ASCE 7-22; Vult=160mph (3-second gust) Vasd=124mph; TCDL=6.0psf; BCDL=6.0psf; h=15ft; Cat. II; Exp C; Enclosed; MWFRS (envelope) exterior (2) zone and C-C Zone3 -1-8-0 to 2-7-10, Zone1 2-7-10 to 16-6-5, Zone2 16-6-5 to 22-7-5, Zone1 22-7-5 to 42-9-4 zone; cantilever left and right exposed ; end vertical left and right exposed; porch left exposed;C-C for members and forces & MWFRS for reactions shown; Lumber DOL=1.60 plate grip DOL=1.60
3) Building Designer / Project engineer responsible for verifying applied roof live load shown covers rain loading requirements specific to the use of this truss component.
4) Provide adequate drainage to prevent water ponding.
5) This truss has been designed for a 10.0 psf bottom chord live load nonconcurrent with any other live loads.
6) * This truss has been designed for a live load of 20.0psf on the bottom chord in all areas where a rectangle 3-06-00 tall by 2-00-00 wide will fit between the bottom chord and any other members.
7) Bearing at joint(s) 12 considers parallel to grain value using ANSI/TPI 1 angle to grain formula. Building designer should verify capacity of bearing surface.
8) Provide mechanical connection (by others) of truss to bearing plate capable of withstanding 671 lb uplift at joint 12, 220 lb uplift at joint 2 and 1458 lb uplift at joint 18.

LOAD CASE(S) Standard

Job	Truss	Truss Type	Qty	Ply	
55828	C1	Half Hip Girder	1	2	Job Reference (optional)

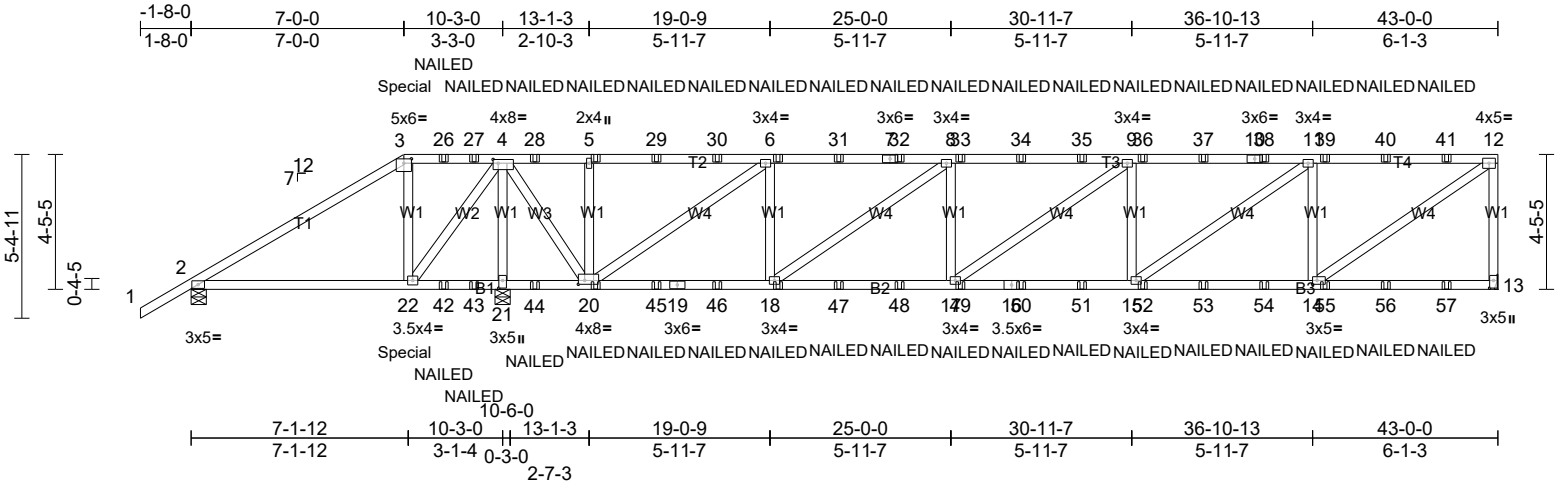

Scale = 1:76.1

Plate Offsets (X, Y): [3:0-3-0,0-1-12], [4:0-2-0,0-1-8], [13:0-3-0,0-1-8], [14:0-1-12,0-1-8], [20:0-2-8,0-1-8], [21:0-3-0,0-1-8]

Loading	(psf)	Spacing	2-0-0	CSI		DEFL	in	(loc)	l/defl	L/d	PLATES	GRIP
TCLL (roof)	20.0	Plate Grip DOL	1.25	TC	0.63	Vert(LL)	0.25	15-17	>999	360	MT20	244/190
TCDL	15.0	Lumber DOL	1.25	BC	0.68	Vert(CT)	-0.32	15-17	>999	240		
BCLL	0.0*	Rep Stress Incr	NO	WB	1.00	Horz(CT)	0.05	13	n/a	n/a		
BCDL	10.0	Code	FBC2023/TPI2014	Matrix-MS							Weight: 487 lb	FT = 20%

LUMBER
TOP CHORD 2x4 SP No.2
BOT CHORD 2x4 SP No.2
WEBS 2x4 SP No.3

BRACING
TOP CHORD Structural wood sheathing directly applied or 5-3-3 oc purlins, except end verticals.
BOT CHORD Rigid ceiling directly applied or 6-0-0 oc bracing.

REACTIONS (lb/size) 2=-514/0-6-0, (min. 0-1-8), 13=2684/ Mechanical, (min. 0-1-8), 21=6138/0-6-0, (min. 0-3-15)
Max Horiz 2=317 (LC 7)
Max Uplift 2=-850 (LC 23), 13=-1510 (LC 5), 21=-3648 (LC 5)
Max Grav 2=486 (LC 4), 13=2880 (LC 17), 21=6654 (LC 18)

FORCES (lb) - Max. Comp./Max. Ten. - All forces 250 (lb) or less except when shown.
TOP CHORD 2-3=-1044/2009, 3-26=-905/1768, 26-27=-905/1768, 4-27=-905/1768, 4-28=-586/1091, 5-28=-586/1091, 5-29=-586/1091, 29-30=-586/1091, 6-30=-586/1091, 6-31=-2855/1518, 7-31=-2855/1518, 7-32=-2855/1518, 8-32=-2855/1518, 8-33=-4769/2563, 33-34=-4769/2563, 34-35=-4769/2563, 9-35=-4769/2563, 9-36=-4985/2690, 36-37=-4985/2690, 10-37=-4985/2690, 10-38=-4985/2690, 11-38=-4985/2690, 11-39=-3482/1900, 39-40=-3482/1900, 40-41=-3482/1900, 12-41=-3482/1900, 12-13=-2741/1558
BOT CHORD 2-22=-1728/1028, 22-42=-3521/1924, 42-43=-3521/1924, 21-43=-3521/1924, 21-44=-3521/1924, 20-44=-3521/1924, 20-45=-1539/2734, 19-45=-1539/2734, 19-46=-1539/2734, 18-46=-1539/2734, 18-47=-2575/4746, 47-48=-2575/4746, 17-48=-2575/4746, 17-49=-2692/5029, 16-49=-2692/5029, 16-50=-2692/5029, 50-51=-2692/5029, 15-51=-2692/5029, 15-52=-1892/3526, 52-53=-1892/3526, 53-54=-1892/3526, 14-54=-1892/3526
WEBS 3-22=-1700/1066, 12-14=-2195/4198, 4-21=-6405/3652, 4-20=-2259/4309, 4-22=-1709/2963, 5-20=-691/628, 6-20=-4630/2459, 6-18=-574/1767, 8-18=-2453/1274, 8-17=0/612, 9-17=-345/216, 9-15=-706/706, 11-15=-975/1832, 11-14=-2038/1437

NOTES
1) 2-ply truss to be connected together with 10d (0.131"x3") nails as follows:
Top chords connected as follows: 2x4 - 1 row at 0-9-0 oc.
Bottom chords connected as follows: 2x4 - 1 row at 0-9-0 oc.
Web connected as follows: 2x4 - 1 row at 0-9-0 oc.
2) All loads are considered equally applied to all plies, except if noted as front (F) or back (B) face in the LOAD CASE(S) section. Ply to ply connections have been provided to distribute only loads noted as (F) or (B), unless otherwise indicated.
3) Wind: ASCE 7-22; Vult=160mph (3-second gust) Vasd=124mph; TCDL=6.0psf; BCDL=6.0psf; h=15ft; Cat. II; Exp C; Enclosed; MWFRS (envelope) exterior (2) zone; cantilever left and right exposed ; end vertical left and right exposed; porch left exposed; Lumber DOL=1.60 plate grip DOL=1.60
4) Building Designer / Project engineer responsible for verifying applied roof live load shown covers rain loading requirements specific to the use of this truss component.
5) Provide adequate drainage to prevent water ponding.
6) This truss has been designed for a 10.0 psf bottom chord live load nonconcurrent with any other live loads.
7) * This truss has been designed for a live load of 20.0psf on the bottom chord in all areas where a rectangle 3-06-00 tall by 2-00-00 wide will fit between the bottom chord and any other members.
8) Refer to girder(s) for truss to truss connections.
9) Provide mechanical connection (by others) of truss to bearing plate capable of withstanding 1510 lb uplift at joint 13, 850 lb uplift at joint 2 and 3648 lb uplift at joint 21.
10) "NAILED" indicates 3-10d (0.148"x3") or 3-12d (0.148"x3.25") toe-nails per NDS guidlines.
11) Hanger(s) or other connection device(s) shall be provided sufficient to support concentrated load(s) 444 lb down and 291 lb up at 7-0-0 on top chord, and 599 lb down and 227 lb up at 7-0-0 on bottom chord. The design/selection of such connection device(s) is the responsibility of others.

LOAD CASE(S) Standard
1) Dead + Roof Live (balanced): Lumber Increase=1.25, Plate Increase=1.25
Uniform Loads (lb/ft)
Vert: 1-3=-70, 3-12=-70, 13-23=-20
Concentrated Loads (lb)
Vert: 3=-175 (F), 22=-411 (F), 20=-66 (F), 5=-142 (F), 6=-142 (F), 18=-66 (F), 26=-142 (F), 27=-142 (F), 28=-142 (F), 29=-142 (F), 30=-142 (F), 31=-142 (F), 32=-142 (F), 33=-142 (F), 34=-142 (F), 35=-142 (F), 36=-142 (F), 37=-142 (F), 38=-142 (F), 39=-142 (F), 40=-142 (F), 41=-142 (F), 42=-66 (F), 43=-66 (F), 44=-66 (F), 45=-66 (F), 46=-66 (F), 47=-66 (F), 48=-66 (F), 49=-66 (F), 50=-66 (F), 51=-66 (F), 52=-66 (F), 53=-66 (F), 54=-66 (F), 55=-66 (F), 56=-66 (F), 57=-66 (F)

Job	Truss	Truss Type	Qty	Ply	
55828	C2	Half Hip	1	1	Job Reference (optional)

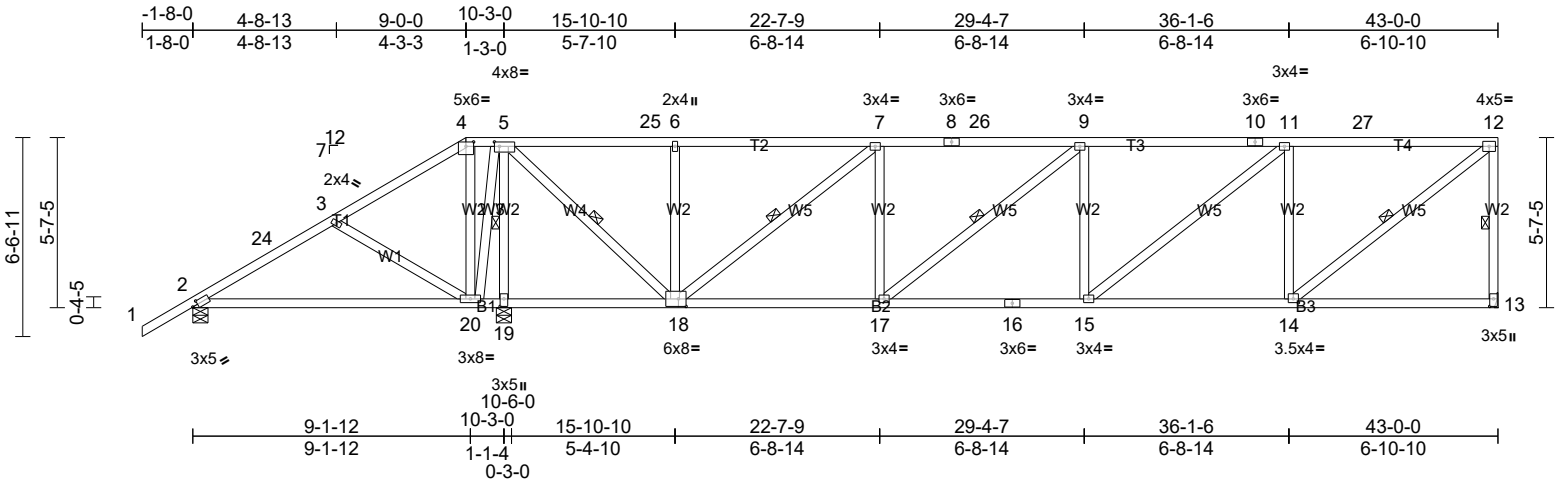

Scale = 1:76.2

Plate Offsets (X, Y): [2:0-2-3,0-1-8], [4:0-3-0,0-1-12], [5:0-2-0,0-1-12], [13:0-3-0,0-1-8], [14:0-2-0,0-1-8], [18:0-3-0,0-3-0], [19:0-3-0,0-1-8]

Loading	(psf)	Spacing	2-0-0	CSI		DEFL	in	(loc)	l/defl	L/d	PLATES	GRIP
TCLL (roof)	20.0	Plate Grip DOL	1.25	TC	0.77	Vert(LL)	0.26	20-23	>468	360	MT20	244/190
TCDL	15.0	Lumber DOL	1.25	BC	0.60	Vert(CT)	-0.28	20-23	>434	240		
BCLL	0.0*	Rep Stress Incr	YES	WB	0.77	Horz(CT)	-0.04	13	n/a	n/a		
BCDL	10.0	Code	FBC2023/TPI2014	Matrix-MS							Weight: 260 lb	FT = 20%

LUMBER
TOP CHORD 2x4 SP No.2
BOT CHORD 2x4 SP No.2
WEBS 2x4 SP No.3

BRACING
TOP CHORD Structural wood sheathing directly applied or 3-9-7 oc purlins, except end verticals.
BOT CHORD Rigid ceiling directly applied or 5-7-13 oc bracing.
WEBS 1 Row at midpt 12-13, 5-19, 5-18, 7-18, 9-17, 12-14

MiTek recommends that Stabilizers and required cross bracing be installed during truss erection, in accordance with Stabilizer Installation guide.

REACTIONS (lb/size) 2=78/0-6-0, (min. 0-1-8), 13=1307/ Mechanical, (min. 0-1-8), 19=2589/0-6-0, (min. 0-3-1)
Max Horiz 2=398 (LC 11)
Max Uplift 2=-80 (LC 12), 13=-691 (LC 9), 19=-1474 (LC 9)
Max Grav 2=218 (LC 10), 13=1307 (LC 1), 19=2589 (LC 1)

FORCES (lb) - Max. Comp./Max. Ten. - All forces 250 (lb) or less except when shown.
TOP CHORD 2-24=-415/704, 3-24=-401/743, 3-4=-514/974, 4-5=-398/802, 5-25=-614/410, 6-25=-614/410, 6-7=-606/402, 7-8=-1575/939, 8-26=-1575/939, 9-26=-1575/939, 9-10=-1833/1069, 10-11=-1833/1069, 11-27=-1345/809, 12-27=-1345/809, 12-13=-1245/725
BOT CHORD 2-20=-653/554, 19-20=-1020/564, 18-19=-1020/564, 17-18=-930/1575, 16-17=-1055/1833, 15-16=-1055/1833, 14-15=-790/1345
WEBS 3-20=-410/442, 4-20=-525/259, 5-19=-2488/1586, 5-20=-878/779, 5-18=-1055/2013, 6-18=-435/377, 7-18=-1324/689, 7-17=-101/428, 9-17=-329/293, 9-15=-254/286, 11-15=-337/622, 11-14=-899/651, 12-14=-893/1683

NOTES

1) Wind: ASCE 7-22; Vult=160mph (3-second gust) Vasd=124mph; TCDL=6.0psf; BCDL=6.0psf; h=15ft; Cat. II; Exp C; Enclosed; MWFRS (envelope) exterior (2) zone and C-C Zone3 -1-8-0 to 2-7-10, Zone1 2-7-10 to 9-0-0, Zone2 9-0-0 to 15-1-0, Zone1 15-1-0 to 42-10-4 zone; cantilever left and right exposed ; end vertical left and right exposed; porch left exposed;C-C for members and forces & MWFRS for reactions shown; Lumber DOL=1.60 plate grip DOL=1.60
2) Building Designer / Project engineer responsible for verifying applied roof live load shown covers rain loading requirements specific to the use of this truss component.
3) Provide adequate drainage to prevent water ponding.
4) This truss has been designed for a 10.0 psf bottom chord live load nonconcurrent with any other live loads.
5) * This truss has been designed for a live load of 20.0psf on the bottom chord in all areas where a rectangle 3-06-00 tall by 2-00-00 wide will fit between the bottom chord and any other members.
6) Refer to girder(s) for truss to truss connections.
7) Provide mechanical connection (by others) of truss to bearing plate capable of withstanding 691 lb uplift at joint 13, 80 lb uplift at joint 2 and 1474 lb uplift at joint 19.

LOAD CASE(S) Standard

Job	Truss	Truss Type	Qty	Ply	
55828	C3	Half Hip	1	1	Job Reference (optional)

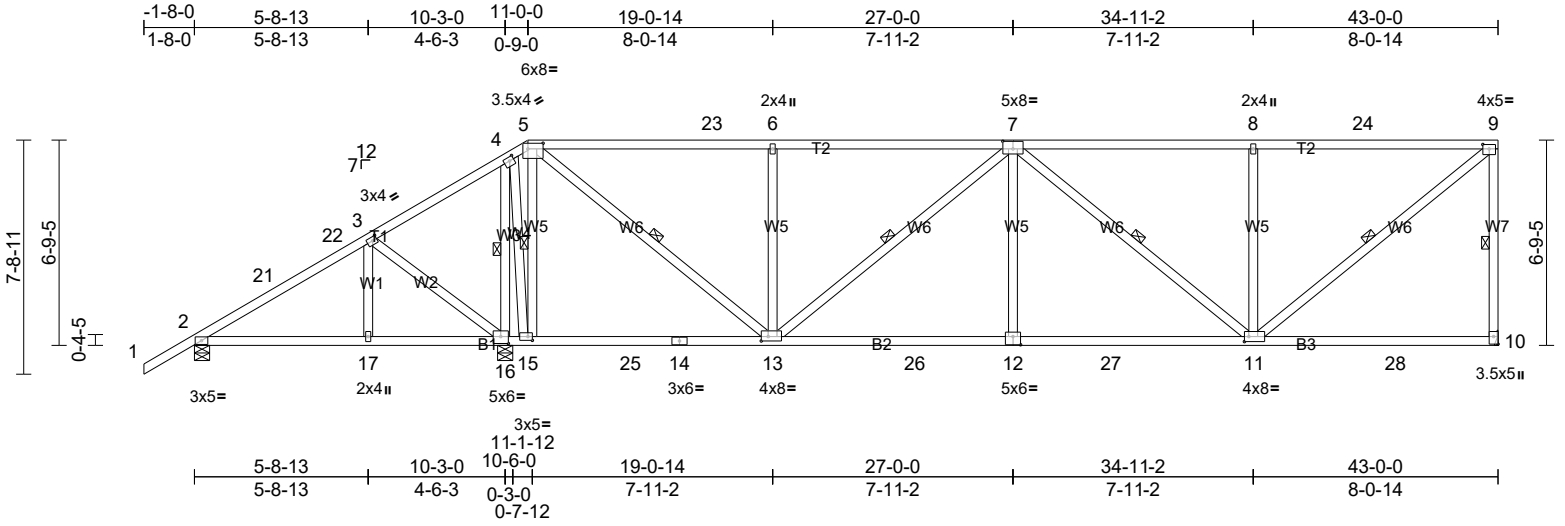

Scale = 1:76.3

Plate Offsets (X, Y): [3:0-1-12,0-1-8], [4:0-1-12,0-1-8], [5:0-6-0,0-2-4], [7:0-4-0,0-3-0], [9:0-2-8,0-1-12], [10:Edge,0-1-12], [11:0-1-12,0-2-0], [12:0-3-0,0-3-4], [13:0-2-12,0-1-12], [15:0-1-12,0-1-8], [16:0-3-0,0-2-12]

Loading	(psf)	Spacing	2-0-0	CSI		DEFL	in	(loc)	l/defl	L/d	PLATES	GRIP
TCLL (roof)	20.0	Plate Grip DOL	1.25	TC	0.88	Vert(LL)	-0.16	10-11	>999	360	MT20	244/190
TCDL	15.0	Lumber DOL	1.25	BC	0.85	Vert(CT)	-0.30	12-13	>999	240		
BCLL	0.0*	Rep Stress Incr	YES	WB	0.78	Horz(CT)	0.05	10	n/a	n/a		
BCDL	10.0	Code	FBC2023/TPI2014	Matrix-MS							Weight: 268 lb	FT = 20%

LUMBER
TOP CHORD 2x4 SP No.2
BOT CHORD 2x4 SP No.2
WEBS 2x4 SP No.3 *Except* W7:2x4 SP No.2

BRACING
TOP CHORD Structural wood sheathing directly applied or 2-2-0 oc purlins, except end verticals.
BOT CHORD Rigid ceiling directly applied or 5-9-8 oc bracing.
WEBS 1 Row at midpt 9-10, 5-15, 5-13, 7-13, 7-11, 9-11, 4-16

MiTek recommends that Stabilizers and required cross bracing be installed during truss erection, in accordance with Stabilizer Installation guide.

REACTIONS (lb/size) 2=326/0-6-0, (min. 0-1-8), 10=1385/ Mechanical, (min. 0-1-8), 16=2263/0-6-0, (min. 0-2-15)
Max Horiz 2=478 (LC 11)
Max Uplift 2=-166 (LC 12), 10=-732 (LC 9), 16=-1292 (LC 9)
Max Grav 2=344 (LC 22), 10=1558 (LC 2), 16=2501 (LC 2)

FORCES (lb) - Max. Comp./Max. Ten. - All forces 250 (lb) or less except when shown.
TOP CHORD 2-21=-308/366, 21-22=-293/369, 3-22=-279/413, 3-4=-480/579, 4-5=-274/276, 5-23=-1379/781, 6-23=-1379/781, 6-7=-1379/781, 7-8=-1489/826, 8-24=-1489/826, 9-24=-1489/826, 9-10=-1399/772
BOT CHORD 2-17=-466/324, 16-17=-466/324, 15-16=-528/433, 15-25=-395/389, 14-25=-395/389, 13-14=-395/389, 13-26=-1003/1924, 12-26=-1003/1924, 12-27=-1003/1924, 11-27=-1003/1924
WEBS 5-15=-1561/995, 5-13=-979/2047, 6-13=-609/525, 7-13=-704/321, 7-12=0/414, 7-11=-562/292, 8-11=-608/536, 9-11=-900/1886, 3-16=-479/582, 4-16=-2068/814, 4-15=-713/1710

NOTES

1) Wind: ASCE 7-22; Vult=160mph (3-second gust) Vasd=124mph; TCDL=6.0psf; BCDL=6.0psf; h=15ft; Cat. II; Exp C; Enclosed; MWFRS (envelope) exterior (2) zone and C-C Zone3 -1-8-0 to 2-7-10, Zone1 2-7-10 to 11-0-0, Zone2 11-0-0 to 17-1-0, Zone1 17-1-0 to 42-10-4 zone; cantilever left and right exposed ; end vertical left and right exposed; porch left exposed;C-C for members and forces & MWFRS for reactions shown; Lumber DOL=1.60 plate grip DOL=1.60
2) Building Designer / Project engineer responsible for verifying applied roof live load shown covers rain loading requirements specific to the use of this truss component.
3) Provide adequate drainage to prevent water ponding.
4) This truss has been designed for a 10.0 psf bottom chord live load nonconcurrent with any other live loads.
5) * This truss has been designed for a live load of 20.0psf on the bottom chord in all areas where a rectangle 3-06-00 tall by 2-00-00 wide will fit between the bottom chord and any other members, with BCDL = 10.0psf.
6) Refer to girder(s) for truss to truss connections.
7) Provide mechanical connection (by others) of truss to bearing plate capable of withstanding 732 lb uplift at joint 10, 166 lb uplift at joint 2 and 1292 lb uplift at joint 16.

LOAD CASE(S) Standard

Job	Truss	Truss Type	Qty	Ply	
55828	C4	Half Hip	1	1	Job Reference (optional)

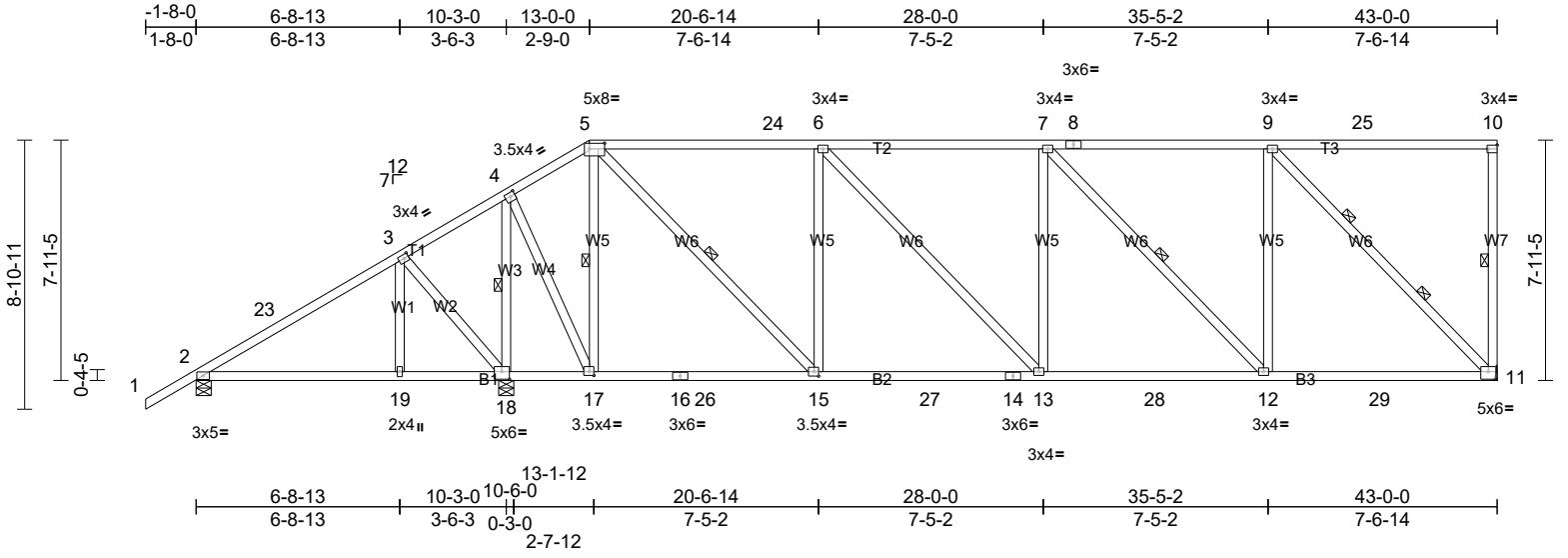

Scale = 1:76.4

Plate Offsets (X, Y): [3:0-1-12,0-1-8], [4:0-1-12,0-1-8], [5:0-6-0,0-2-4], [10:Edge,0-1-8], [11:0-3-0,0-3-0], [15:0-1-12,0-1-12], [17:0-1-12,0-1-8], [18:0-3-0,0-3-0]

Loading	(psf)	Spacing	2-0-0	CSI		DEFL	in	(loc)	l/defl	L/d	PLATES	GRIP
TCLL (roof)	20.0	Plate Grip DOL	1.25	TC	0.83	Vert(LL)	0.14	19-22	>869	360	MT20	244/190
TCDL	15.0	Lumber DOL	1.25	BC	0.81	Vert(CT)	-0.25	13-15	>999	240		
BCLL	0.0*	Rep Stress Incr	YES	WB	0.92	Horz(CT)	0.06	11	n/a	n/a		
BCDL	10.0	Code	FBC2023/TPI2014	Matrix-MS							Weight: 281 lb	FT = 20%

LUMBER
TOP CHORD 2x4 SP No.2
BOT CHORD 2x4 SP No.2
WEBS 2x4 SP No.3 *Except* W7:2x4 SP No.2

BRACING
TOP CHORD Structural wood sheathing directly applied or 3-6-3 oc purlins, except end verticals.
BOT CHORD Rigid ceiling directly applied or 6-0-0 oc bracing.
WEBS 1 Row at midpt 10-11, 5-17, 4-18, 5-15, 7-12
WEBS 2 Rows at 1/3 pts 9-11

MiTek recommends that Stabilizers and required cross bracing be installed during truss erection, in accordance with Stabilizer Installation guide.

REACTIONS (lb/size) 2=416/0-6-0, (min. 0-1-8), 11=1413/Mechanical, (min. 0-1-8), 18=2144/0-6-0, (min. 0-2-14)
Max Horiz 2=559 (LC 11)
Max Uplift 2=-204 (LC 12), 11=-756 (LC 9), 18=-1176 (LC 9)
Max Grav 2=416 (LC 22), 11=1592 (LC 2), 18=2410 (LC 2)

FORCES (lb) - Max. Comp./Max. Ten. - All forces 250 (lb) or less except when shown.
TOP CHORD 2-23=-351/322, 3-23=-318/383, 3-4=-429/510, 4-5=-565/359, 5-24=-1422/777, 6-24=-1422/777, 6-7=-1695/907, 7-8=-1262/716, 8-9=-1262/716, 9-25=-260/273, 10-25=-260/273
BOT CHORD 2-19=-530/250, 18-19=-530/250, 17-18=-452/350, 16-17=-348/535, 16-26=-348/535, 15-26=-348/535, 15-27=-818/1422, 14-27=-818/1422, 13-14=-818/1422, 13-28=-924/1695, 12-28=-924/1695, 12-29=-708/1262, 11-29=-708/1262
WEBS 5-17=-1205/726, 9-11=-1784/844, 3-18=-556/618, 3-19=-283/266, 4-18=-1970/875, 4-17=-718/1626, 6-15=-814/617, 5-15=-739/1544, 6-13=-202/392, 7-12=-623/324, 9-12=-147/790

NOTES
1) Wind: ASCE 7-22; Vult=160mph (3-second gust) Vasd=124mph; TCDL=6.0psf; BCDL=6.0psf; h=15ft; Cat. II; Exp C; Enclosed; MWFRS (envelope) exterior (2) zone and C-C Zone3 -1-8-0 to 2-7-10, Zone1 2-7-10 to 13-0-0, Zone2 13-0-0 to 19-1-0, Zone1 19-1-0 to 42-10-4 zone; cantilever left and right exposed ; end vertical left and right exposed; porch left exposed;C-C for members and forces & MWFRS for reactions shown; Lumber DOL=1.60 plate grip DOL=1.60
2) Building Designer / Project engineer responsible for verifying applied roof live load shown covers rain loading requirements specific to the use of this truss component.
3) Provide adequate drainage to prevent water ponding.
4) This truss has been designed for a 10.0 psf bottom chord live load nonconcurrent with any other live loads.
5) * This truss has been designed for a live load of 20.0psf on the bottom chord in all areas where a rectangle 3-06-00 tall by 2-00-00 wide will fit between the bottom chord and any other members, with BCDL = 10.0psf.
6) Refer to girder(s) for truss to truss connections.
7) Provide mechanical connection (by others) of truss to bearing plate capable of withstanding 756 lb uplift at joint 11, 204 lb uplift at joint 2 and 1176 lb uplift at joint 18.

LOAD CASE(S) Standard

Job	Truss	Truss Type	Qty	Ply	
55828	C5	Half Hip	1	1	Job Reference (optional)

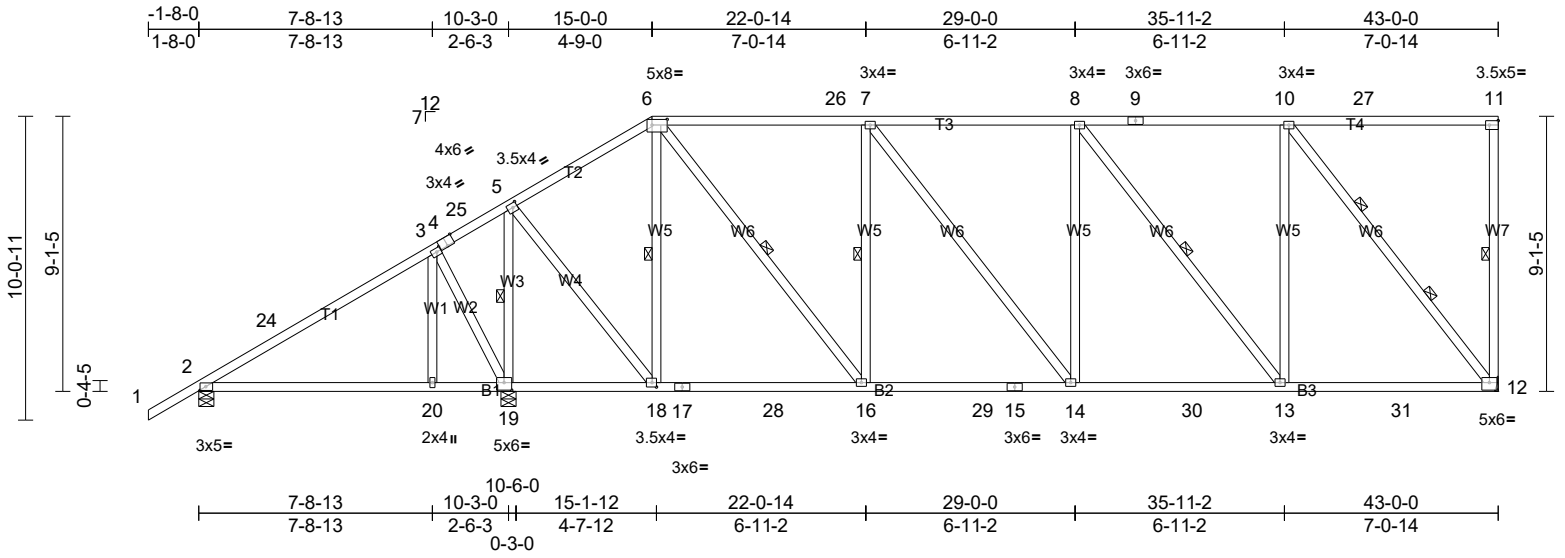

Scale = 1:76.6

Plate Offsets (X, Y): [2:0-2-5,0-1-8], [3:0-1-12,0-1-8], [4:0-3-0,Edge], [5:0-1-12,0-1-12], [6:0-6-0,0-2-4], [11:Edge,0-1-12], [12:0-3-0,0-3-0], [18:0-1-12,0-1-12], [19:0-3-0,0-3-0]

Loading	(psf)	Spacing	2-0-0	CSI		DEFL	in	(loc)	l/defl	L/d	PLATES	GRIP
TCLL (roof)	20.0	Plate Grip DOL	1.25	TC	0.68	Vert(LL)	0.24	20-23	>511	360	MT20	244/190
TCDL	15.0	Lumber DOL	1.25	BC	0.72	Vert(CT)	-0.24	20-23	>506	240		
BCLL	0.0*	Rep Stress Incr	YES	WB	0.82	Horz(CT)	0.05	12	n/a	n/a		
BCDL	10.0	Code	FBC2023/TPI2014	Matrix-MS							Weight: 295 lb	FT = 20%

LUMBER

TOP CHORD 2x4 SP No.2
BOT CHORD 2x4 SP No.2
WEBS 2x4 SP No.3 *Except* W7:2x4 SP 2250F 1.8E

BRACING

TOP CHORD Structural wood sheathing directly applied or 4-0-10 oc purlins, except end verticals.
BOT CHORD Rigid ceiling directly applied or 6-0-0 oc bracing.
WEBS 1 Row at midpt 11-12, 6-18, 5-19, 7-16, 6-16, 8-13
WEBS 2 Rows at 1/3 pts 10-12

MiTek recommends that Stabilizers and required cross bracing be installed during truss erection, in accordance with Stabilizer Installation guide.

REACTIONS (lb/size) 2=464/0-6-0, (min. 0-1-8), 12=1428/ Mechanical, (min. 0-1-8), 19=2081/0-6-0, (min. 0-2-12)
Max Horiz 2=640 (LC 11)
Max Uplift 2=-209 (LC 12), 12=-771 (LC 9), 19=-1094 (LC 9)
Max Grav 2=470 (LC 22), 12=1623 (LC 2), 19=2340 (LC 2)

FORCES (lb) - Max. Comp./Max. Ten. - All forces 250 (lb) or less except when shown.

TOP CHORD 2-24=-392/329, 3-24=-359/406, 3-4=-397/409, 4-25=-395/412, 5-25=-390/440, 5-6=-853/509, 6-26=-1375/739, 7-26=-1375/739, 7-8=-1487/791, 8-9=-1063/625, 9-10=-1063/625, 10-27=-289/307, 11-27=-289/307
BOT CHORD 2-20=-558/304, 19-20=-558/304, 18-19=-395/304, 17-18=-531/816, 17-28=-531/816, 16-28=-531/816, 16-29=-816/1375, 15-29=-816/1375, 14-15=-816/1375, 14-30=-845/1487, 13-30=-845/1487, 13-31=-630/1059, 12-31=-630/1059
WEBS 6-18=-859/552, 10-12=-1689/802, 3-19=-624/684, 3-20=-359/304, 5-19=-1769/773, 5-18=-619/1452, 7-16=-661/548, 6-16=-594/1173, 8-13=-693/349, 10-13=-202/872

NOTES

1) Unbalanced roof live loads have been considered for this design.
2) Wind: ASCE 7-22; Vult=160mph (3-second gust) Vasd=124mph; TCDL=6.0psf; BCDL=6.0psf; h=15ft; Cat. II; Exp C; Enclosed; MWFRS (envelope) exterior (2) zone and C-C Zone3 -1-8-0 to 2-7-10, Zone1 2-7-10 to 15-0-0, Zone2 15-0-0 to 21-1-0, Zone1 21-1-0 to 42-10-4 zone; cantilever left and right exposed ; end vertical left and right exposed; porch left exposed;C-C for members and forces & MWFRS for reactions shown; Lumber DOL=1.60 plate grip DOL=1.60
3) Building Designer / Project engineer responsible for verifying applied roof live load shown covers rain loading requirements specific to the use of this truss component.
4) Provide adequate drainage to prevent water ponding.
5) This truss has been designed for a 10.0 psf bottom chord live load nonconcurrent with any other live loads.
6) * This truss has been designed for a live load of 20.0psf on the bottom chord in all areas where a rectangle 3-06-00 tall by 2-00-00 wide will fit between the bottom chord and any other members, with BCDL = 10.0psf.
7) Refer to girder(s) for truss to truss connections.
8) Provide mechanical connection (by others) of truss to bearing plate capable of withstanding 771 lb uplift at joint 12, 209 lb uplift at joint 2 and 1094 lb uplift at joint 19.

LOAD CASE(S) Standard

Job	Truss	Truss Type	Qty	Ply	
55828	C6	Half Hip	1	1	Job Reference (optional)

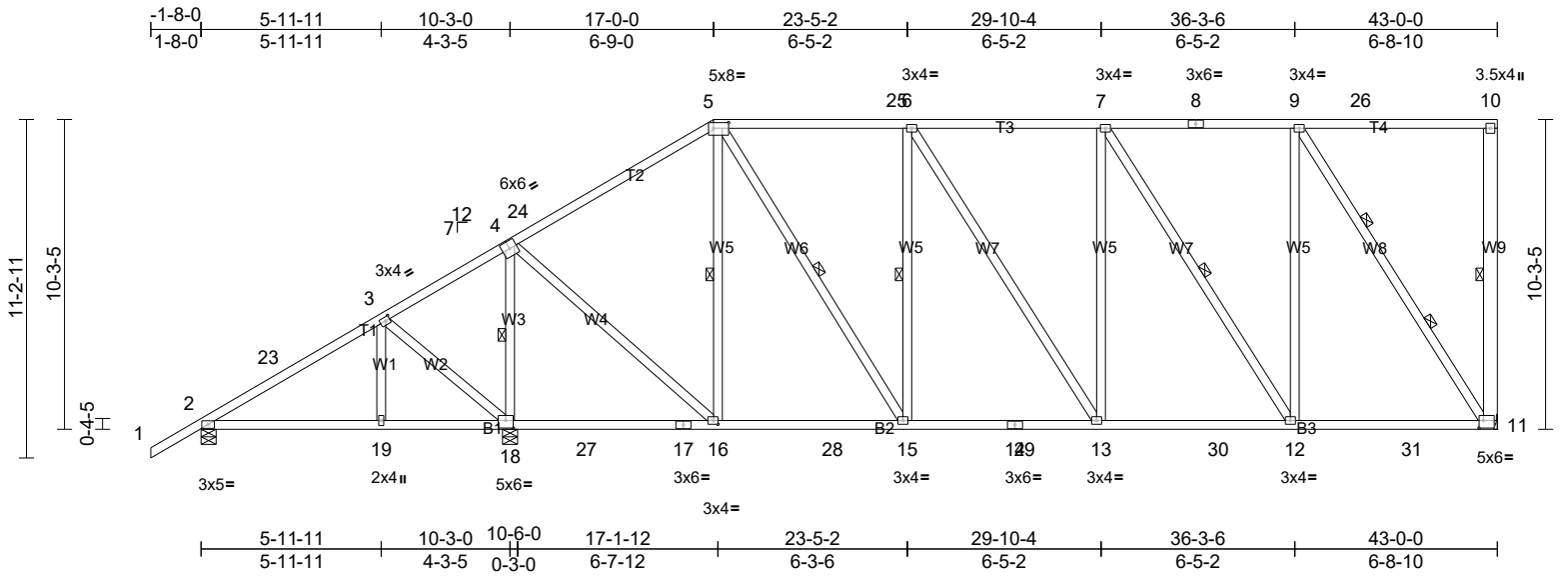

Scale = 1:76.7

Plate Offsets (X, Y): [3:0-1-12,0-1-8], [5:0-6-0,0-2-4], [11:0-1-12,0-3-0], [16:0-1-12,0-1-8], [18:0-3-0,0-3-0]

Loading	(psf)	Spacing	2-0-0	CSI		DEFL	in	(loc)	l/defl	L/d	PLATES	GRIP
TCLL (roof)	20.0	Plate Grip DOL	1.25	TC	0.70	Vert(LL)	0.09	19-22	>999	360	MT20	244/190
TCDL	15.0	Lumber DOL	1.25	BC	0.62	Vert(CT)	-0.18	13-15	>999	240		
BCLL	0.0*	Rep Stress Incr	YES	WB	0.89	Horz(CT)	-0.05	11	n/a	n/a		
BCDL	10.0	Code	FBC2023/TPI2014	Matrix-MS							Weight: 318 lb	FT = 20%

LUMBER

TOP CHORD 2x4 SP No.2
BOT CHORD 2x4 SP No.2
WEBS 2x4 SP No.3 *Except* W9:2x6 SP No.2

BRACING

TOP CHORD Structural wood sheathing directly applied or 4-8-3 oc purlins, except end verticals.
BOT CHORD Rigid ceiling directly applied or 6-0-0 oc bracing.
WEBS 1 Row at midpt 10-11, 5-16, 4-18, 6-15, 5-15, 7-12
WEBS 2 Rows at 1/3 pts 9-11

MiTek recommends that Stabilizers and required cross bracing be installed during truss erection, in accordance with Stabilizer Installation guide.

REACTIONS (lb/size) 2=473/0-6-0, (min. 0-1-8), 11=1427/Mechanical, (min. 0-1-8), 18=2066/0-6-0, (min. 0-2-12)
Max Horiz 2=721 (LC 11)
Max Uplift 2=-189 (LC 12), 11=-772 (LC 9), 18=-1056 (LC 9)
Max Grav 2=490 (LC 22), 11=1631 (LC 2), 18=2356 (LC 2)

FORCES (lb) - Max. Comp./Max. Ten. - All forces 250 (lb) or less except when shown.
TOP CHORD 2-23=-474/364, 3-23=-427/384, 3-4=-568/520, 4-24=-1059/526, 5-24=-969/563, 5-25=-1270/725, 6-25=-1270/725, 6-7=-1289/724, 7-8=-962/604, 8-9=-962/604, 9-26=-321/342, 10-26=-321/342
BOT CHORD 2-19=-670/412, 18-19=-670/412, 18-27=-395/316, 17-27=-395/316, 16-17=-395/316, 16-28=-618/982, 15-28=-618/982, 14-15=-777/1287, 14-29=-777/1287, 13-29=-777/1287, 13-30=-765/1289, 12-30=-765/1289, 12-31=-566/932, 11-31=-566/932
WEBS 5-16=-626/450, 9-11=-1602/759, 3-18=-450/518, 3-19=-276/211, 4-18=-1843/946, 4-16=-563/1371, 6-15=-492/493, 5-15=-500/849, 7-13=-29/305, 7-12=-738/367, 9-12=-239/924

NOTES

1) Wind: ASCE 7-22; Vult=160mph (3-second gust) Vasd=124mph; TCDL=6.0psf; BCDL=6.0psf; h=15ft; Cat. II; Exp C; Enclosed; MWFRS (envelope) exterior (2) zone and C-C Zone3 -1-8-0 to 2-7-10, Zone1 2-7-10 to 17-0-0, Zone2 17-0-0 to 23-1-0, Zone1 23-1-0 to 42-9-4 zone; cantilever left and right exposed ; end vertical left and right exposed; porch left exposed;C-C for members and forces & MWFRS for reactions shown; Lumber DOL=1.60 plate grip DOL=1.60
2) Building Designer / Project engineer responsible for verifying applied roof live load shown covers rain loading requirements specific to the use of this truss component.
3) Provide adequate drainage to prevent water ponding.
4) All plates are 3x4 MT20 unless otherwise indicated.
5) This truss has been designed for a 10.0 psf bottom chord live load nonconcurrent with any other live loads.
6) * This truss has been designed for a live load of 20.0psf on the bottom chord in all areas where a rectangle 3-06-00 tall by 2-00-00 wide will fit between the bottom chord and any other members, with BCDL = 10.0psf.
7) Refer to girder(s) for truss to truss connections.
8) Provide mechanical connection (by others) of truss to bearing plate capable of withstanding 772 lb uplift at joint 11, 189 lb uplift at joint 2 and 1056 lb uplift at joint 18.

LOAD CASE(S) Standard

Job	Truss	Truss Type	Qty	Ply	
55828	C7	Piggyback Base	1	1	Job Reference (optional)

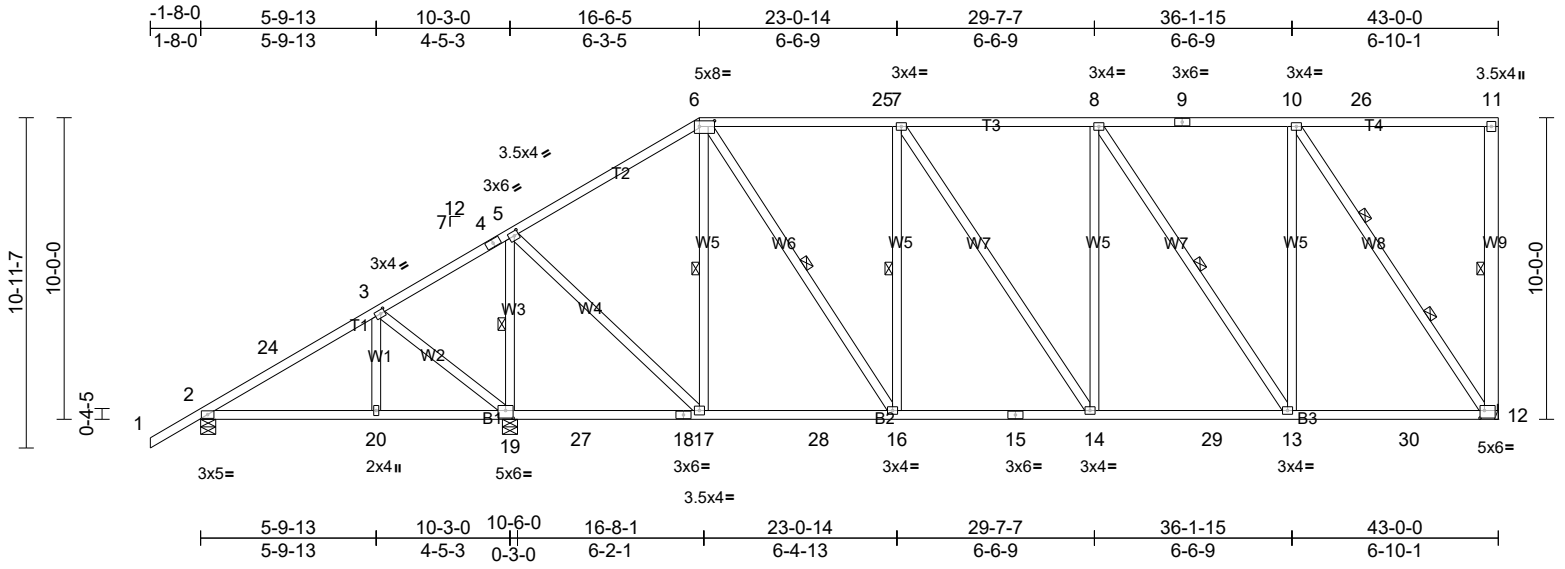

Scale = 1:76.7

Plate Offsets (X, Y): [3:0-1-12,0-1-8], [5:0-1-12,0-1-12], [6:0-6-0,0-2-4], [12:0-1-12,0-3-0], [19:0-3-0,0-3-0]

Loading	(psf)	Spacing	2-0-0	CSI		DEFL	in	(loc)	l/defl	L/d	PLATES	GRIP
TCLL (roof)	20.0	Plate Grip DOL	1.25	TC	0.66	Vert(LL)	-0.10	14-16	>999	360	MT20	244/190
TCDL	15.0	Lumber DOL	1.25	BC	0.64	Vert(CT)	-0.18	14-16	>999	240		
BCLL	0.0*	Rep Stress Incr	YES	WB	0.84	Horz(CT)	-0.05	12	n/a	n/a		
BCDL	10.0	Code	FBC2023/TPI2014	Matrix-MS							Weight: 314 lb	FT = 20%

LUMBER
TOP CHORD 2x4 SP No.2
BOT CHORD 2x4 SP No.2
WEBS 2x4 SP No.3 *Except* W9:2x6 SP No.2

BRACING
TOP CHORD Structural wood sheathing directly applied or 4-6-8 oc purlins, except end verticals.
BOT CHORD Rigid ceiling directly applied or 6-0-0 oc bracing.
WEBS 1 Row at midpt 11-12, 6-17, 7-16, 6-16, 8-13, 5-19
WEBS 2 Rows at 1/3 pts 10-12

MiTek recommends that Stabilizers and required cross bracing be installed during truss erection, in accordance with Stabilizer Installation guide.

REACTIONS (lb/size) 2=461/0-6-0, (min. 0-1-8), 12=1424/ Mechanical, (min. 0-1-8), 19=2082/0-6-0, (min. 0-2-13)
Max Horiz 2=702 (LC 11)
Max Uplift 2=-187 (LC 12), 12=-769 (LC 9), 19=-1074 (LC 9)
Max Grav 2=475 (LC 22), 12=1625 (LC 2), 19=2373 (LC 2)

FORCES (lb) - Max. Comp./Max. Ten. - All forces 250 (lb) or less except when shown.
TOP CHORD 2-24=-457/362, 3-24=-415/382, 3-4=-568/525, 4-5=-544/533, 5-6=-1003/543, 6-25=-1285/720, 7-25=-1285/720, 7-8=-1327/726, 8-9=-983/605, 9-10=-983/605, 10-26=-315/334, 11-26=-315/334
BOT CHORD 2-20=-664/400, 19-20=-664/400, 19-27=-393/322, 18-27=-393/322, 17-18=-393/322, 17-28=-590/942, 16-28=-590/942, 15-16=-781/1292, 14-15=-781/1292, 14-29=-779/1327, 13-29=-779/1327, 13-30=-579/953, 12-30=-579/953
WEBS 6-17=-675/474, 10-12=-1612/764, 7-16=-559/505, 6-16=-518/946, 8-14=-15/282, 8-13=-720/358, 10-13=-225/906, 3-19=-469/532, 5-19=-1870/944, 5-17=-571/1379, 3-20=-268/215

NOTES
1) Unbalanced roof live loads have been considered for this design.
2) Wind: ASCE 7-22; Vult=160mph (3-second gust) Vasd=124mph; TCDL=6.0psf; BCDL=6.0psf; h=15ft; Cat. II; Exp C; Enclosed; MWFRS (envelope) exterior (2) zone and C-C Zone3 -1-8-0 to 2-7-10, Zone1 2-7-10 to 16-6-5, Zone2 16-6-5 to 22-7-5, Zone1 22-7-5 to 42-9-4 zone; cantilever left and right exposed ; end vertical left and right exposed; porch left exposed;C-C for members and forces & MWFRS for reactions shown; Lumber DOL=1.60 plate grip DOL=1.60
3) Building Designer / Project engineer responsible for verifying applied roof live load shown covers rain loading requirements specific to the use of this truss component.
4) Provide adequate drainage to prevent water ponding.
5) This truss has been designed for a 10.0 psf bottom chord live load nonconcurrent with any other live loads.
6) * This truss has been designed for a live load of 20.0psf on the bottom chord in all areas where a rectangle 3-06-00 tall by 2-00-00 wide will fit between the bottom chord and any other members, with BCDL = 10.0psf.
7) Refer to girder(s) for truss to truss connections.
8) Provide mechanical connection (by others) of truss to bearing plate capable of withstanding 769 lb uplift at joint 12, 187 lb uplift at joint 2 and 1074 lb uplift at joint 19.

LOAD CASE(S) Standard

Job	Truss	Truss Type	Qty	Ply	
55828	C8	Piggyback Base	1	1	Job Reference (optional)

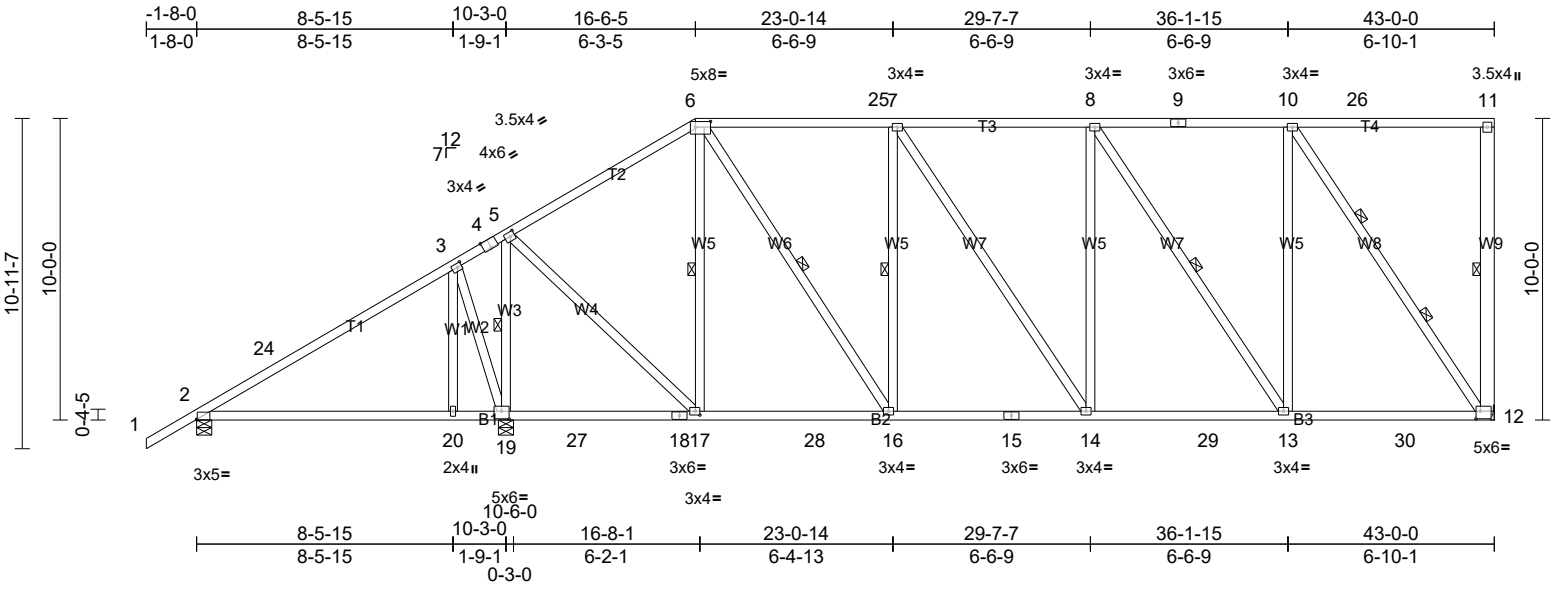

Scale = 1:76.7

Plate Offsets (X, Y): [2:0-2-7,0-1-4], [3:0-1-12,0-1-8], [4:0-3-0,Edge], [5:0-1-12,0-1-12], [6:0-6-0,0-2-4], [12:0-1-12,0-3-0], [17:0-1-12,0-1-8], [19:0-3-0,0-3-0]

Loading	(psf)	Spacing	2-0-0	CSI		DEFL	in	(loc)	l/defl	L/d	PLATES	GRIP
TCLL (roof)	20.0	Plate Grip DOL	1.25	TC	0.86	Vert(LL)	0.34	20-23	>366	360	MT20	244/190
TCDL	15.0	Lumber DOL	1.25	BC	0.67	Vert(CT)	-0.34	20-23	>357	240		
BCLL	0.0*	Rep Stress Incr	YES	WB	0.85	Horz(CT)	-0.05	12	n/a	n/a		
BCDL	10.0	Code	FBC2023/TPI2014	Matrix-MS							Weight: 316 lb	FT = 20%

LUMBER
TOP CHORD 2x4 SP No.2
BOT CHORD 2x4 SP No.2
WEBS 2x4 SP No.3 *Except* W9:2x6 SP No.2

BRACING
TOP CHORD Structural wood sheathing directly applied or 3-1-0 oc purlins, except end verticals.
BOT CHORD Rigid ceiling directly applied or 6-0-0 oc bracing.
WEBS 1 Row at midpt 11-12, 6-17, 7-16, 6-16, 8-13, 5-19
WEBS 2 Rows at 1/3 pts 10-12

MiTek recommends that Stabilizers and required cross bracing be installed during truss erection, in accordance with Stabilizer Installation guide.

REACTIONS (lb/size) 2=497/0-6-0, (min. 0-1-8), 12=1435/ Mechanical, (min. 0-1-8), 19=2035/0-6-0, (min. 0-2-12)
Max Horiz 2=702 (LC 11)
Max Uplift 2=-211 (LC 12), 12=-779 (LC 9), 19=-1035 (LC 9)
Max Grav 2=509 (LC 22), 12=1638 (LC 2), 19=2320 (LC 2)

FORCES (lb) - Max. Comp./Max. Ten. - All forces 250 (lb) or less except when shown.
TOP CHORD 2-24=-427/343, 3-24=-395/431, 3-4=-368/361, 4-5=-360/382, 5-6=-1041/588, 6-25=-1311/749, 7-25=-1311/749, 7-8=-1345/745, 8-9=-987/615, 9-10=-987/615, 10-26=-315/334, 11-26=-315/334
BOT CHORD 2-20=-582/342, 19-20=-582/342, 19-27=-341/256, 18-27=-341/256, 17-18=-341/256, 17-28=-632/961, 16-28=-632/961, 15-16=-799/1311, 14-15=-799/1311, 14-29=-791/1345, 13-29=-791/1345, 13-30=-585/958, 12-30=-585/958
WEBS 6-17=-651/451, 10-12=-1628/775, 7-16=-552/504, 6-16=-515/934, 8-14=-22/293, 8-13=-736/369, 10-13=-232/919, 3-19=-695/810, 3-20=-471/330, 5-19=-1603/695, 5-17=-548/1340

NOTES
1) Unbalanced roof live loads have been considered for this design.
2) Wind: ASCE 7-22; Vult=160mph (3-second gust) Vasd=124mph; TCDL=6.0psf; BCDL=6.0psf; h=15ft; Cat. II; Exp C; Enclosed; MWFRS (envelope) exterior (2) zone and C-C Zone3 -1-8-0 to 2-7-10, Zone1 2-7-10 to 16-6-5, Zone2 16-6-5 to 22-7-5, Zone1 22-7-5 to 42-9-4 zone; cantilever left and right exposed ; end vertical left and right exposed; porch left exposed;C-C for members and forces & MWFRS for reactions shown; Lumber DOL=1.60 plate grip DOL=1.60
3) Building Designer / Project engineer responsible for verifying applied roof live load shown covers rain loading requirements specific to the use of this truss component.
4) Provide adequate drainage to prevent water ponding.
5) All plates are 3x4 MT20 unless otherwise indicated.
6) This truss has been designed for a 10.0 psf bottom chord live load nonconcurrent with any other live loads.
7) * This truss has been designed for a live load of 20.0psf on the bottom chord in all areas where a rectangle 3-06-00 tall by 2-00-00 wide will fit between the bottom chord and any other members, with BCDL = 10.0psf.
8) Refer to girder(s) for truss to truss connections.
9) Provide mechanical connection (by others) of truss to bearing plate capable of withstanding 779 lb uplift at joint 12, 211 lb uplift at joint 2 and 1035 lb uplift at joint 19.

LOAD CASE(S) Standard

Job	Truss	Truss Type	Qty	Ply	
55828	CJ7	Diagonal Hip Girder	4	1	Job Reference (optional)

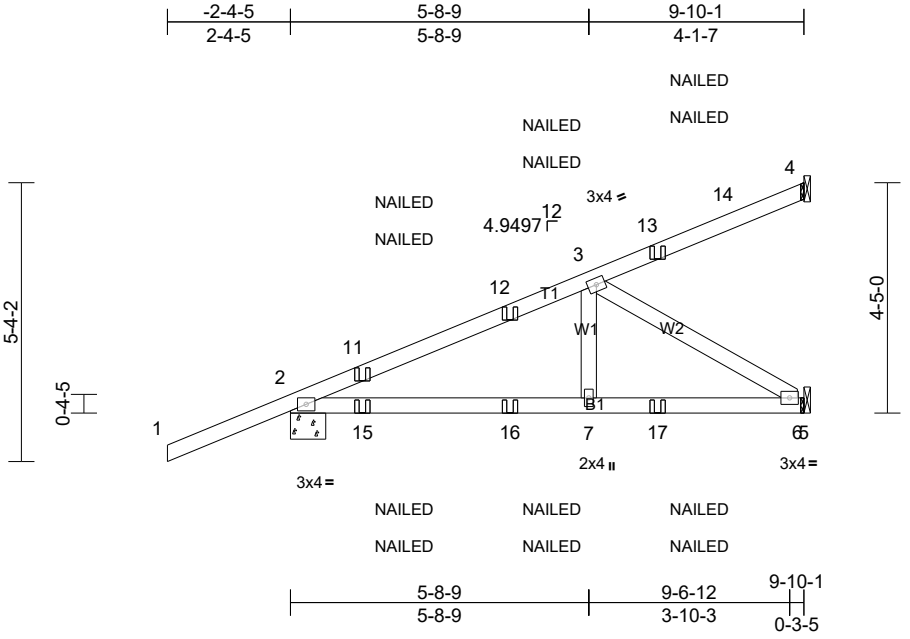

Scale = 1:44.3

Loading	(psf)	Spacing	2-0-0	CSI		DEFL	in	(loc)	l/defl	L/d	PLATES	GRIP
TCLL (roof)	20.0	Plate Grip DOL	1.25	TC	0.49	Vert(LL)	-0.09	7-10	>999	360	MT20	244/190
TCDL	15.0	Lumber DOL	1.25	BC	0.47	Vert(CT)	-0.09	7-10	>999	240		
BCLL	0.0*	Rep Stress Incr	NO	WB	0.36	Horz(CT)	0.01	6	n/a	n/a		
BCDL	10.0	Code	FBC2023/TPI2014	Matrix-MS							Weight: 44 lb	FT = 20%

LUMBER
TOP CHORD 2x4 SP No.2
BOT CHORD 2x4 SP No.2
WEBS 2x4 SP No.3

BRACING
TOP CHORD Structural wood sheathing directly applied or 5-9-1 oc purlins.
BOT CHORD Rigid ceiling directly applied or 8-6-13 oc bracing.

MiTek recommends that Stabilizers and required cross bracing be installed during truss erection, in accordance with Stabilizer Installation guide.

REACTIONS (lb/size) 2=511/0-8-2, (min. 0-1-8), 4=132/Mechanical, (min. 0-1-8), 6=373/Mechanical, (min. 0-1-8)
Max Horiz 2=334 (LC 8)
Max Uplift 2=-421 (LC 4), 4=-112 (LC 8), 6=-238 (LC 8)
Max Grav 2=604 (LC 18), 4=132 (LC 1), 6=481 (LC 18)

FORCES (lb) - Max. Comp./Max. Ten. - All forces 250 (lb) or less except when shown.
TOP CHORD 2-11=-943/324, 11-12=-870/317, 3-12=-758/291
BOT CHORD 2-15=-442/713, 15-16=-442/713, 7-16=-442/713, 7-17=-442/713, 6-17=-442/713
WEBS 3-6=-833/516

NOTES
1) Wind: ASCE 7-22; Vult=160mph (3-second gust) Vasd=124mph; TCDL=6.0psf; BCDL=6.0psf; h=15ft; Cat. II; Exp C; Enclosed; MWFRS (envelope) exterior (2) zone; cantilever left and right exposed ; end vertical left and right exposed; Lumber DOL=1.60 plate grip DOL=1.60
2) Building Designer / Project engineer responsible for verifying applied roof live load shown covers rain loading requirements specific to the use of this truss component.
3) This truss has been designed for a 10.0 psf bottom chord live load nonconcurrent with any other live loads.
4) * This truss has been designed for a live load of 20.0psf on the bottom chord in all areas where a rectangle 3-06-00 tall by 2-00-00 wide will fit between the bottom chord and any other members.
5) Refer to girder(s) for truss to truss connections.
6) Provide mechanical connection (by others) of truss to bearing plate capable of withstanding 112 lb uplift at joint 4, 421 lb uplift at joint 2 and 238 lb uplift at joint 6.
7) "NAILED" indicates 3-10d (0.148"x3") or 2-12d (0.148"x3.25") toe-nails per NDS guidlines.
8) In the LOAD CASE(S) section, loads applied to the face of the truss are noted as front (F) or back (B).

LOAD CASE(S) Standard
1) Dead + Roof Live (balanced): Lumber Increase=1.25, Plate Increase=1.25
Uniform Loads (lb/ft)
Vert: 1-4=-70, 5-8=-20
Concentrated Loads (lb)
Vert: 11=97 (F=49, B=49), 13=-84 (F=-42, B=-42), 15=82 (F=41, B=41), 16=-2 (F=-1, B=-1), 17=-64 (F=-32, B=-32)

Job	Truss	Truss Type	Qty	Ply	
55828	GR1	Half Hip Girder	1	3	Job Reference (optional)

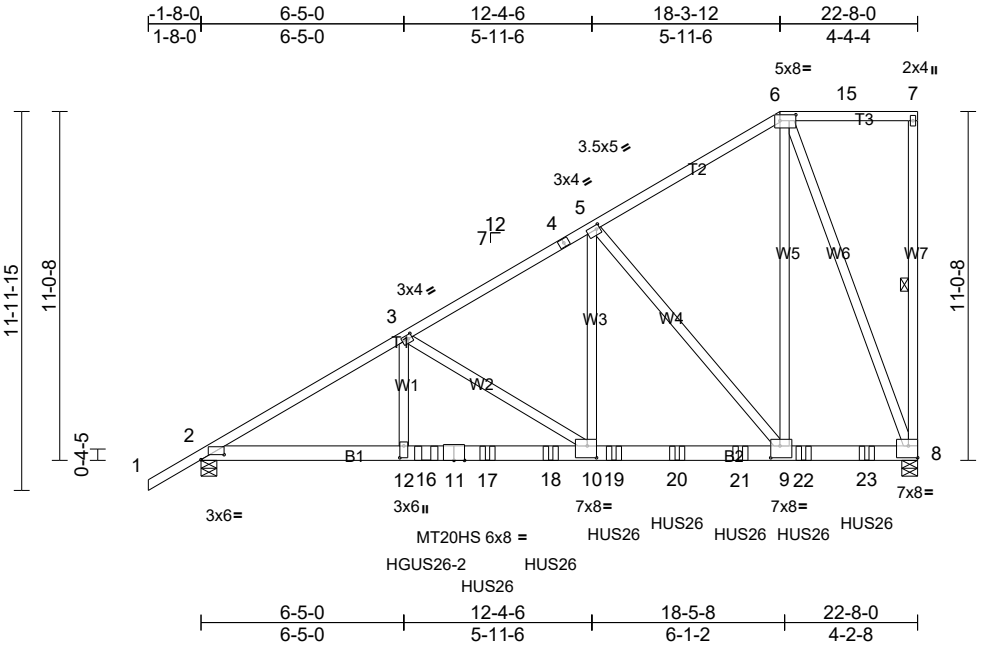

Scale = 1:73.2

Plate Offsets (X, Y): [2:0-8-12,0-1-15], [3:0-1-8,0-1-8], [5:0-1-4,0-1-8], [6:0-6-0,0-2-4], [8:Edge,0-4-8], [9:0-3-8,0-4-8], [10:0-3-8,0-4-8], [12:0-4-8,0-1-8]

Loading	(psf)	Spacing	2-0-0	CSI		DEFL	in	(loc)	l/defl	L/d	PLATES	GRIP
TCLL (roof)	20.0	Plate Grip DOL	1.25	TC	0.61	Vert(LL)	0.25	10-12	>999	360	MT20	244/190
TCDL	15.0	Lumber DOL	1.25	BC	0.52	Vert(CT)	-0.30	10-12	>895	240	MT20HS	187/143
BCLL	0.0*	Rep Stress Incr	NO	WB	0.90	Horz(CT)	0.05	8	n/a	n/a		
BCDL	10.0	Code	FBC2023/TPI2014	Matrix-MS							Weight: 538 lb	FT = 20%

LUMBER
TOP CHORD 2x4 SP No.2
BOT CHORD 2x6 SP M 24
WEBS 2x4 SP No.3 *Except* W5:2x4 SP No.2, W6:2x4 SP 2250F 1.8E

BRACING
TOP CHORD Structural wood sheathing directly applied or 6-0-0 oc purlins, except end verticals.
BOT CHORD Rigid ceiling directly applied or 10-0-0 oc bracing.
WEBS 1 Row at midpt 7-8

REACTIONS (lb/size) 2=6119/0-6-0, (min. 0-1-11), 8=8367/0-6-0, (min. 0-2-8)
Max Horiz 2=771 (LC 26)
Max Uplift 2=-3303 (LC 8), 8=-4651 (LC 8)
Max Grav 2=6176 (LC 2), 8=9073 (LC 2)

FORCES (lb) - Max. Comp./Max. Ten. - All forces 250 (lb) or less except when shown.
TOP CHORD 2-3=-11948/6383, 3-4=-8567/4424, 4-5=-8405/4443, 5-6=-3645/1952, 6-15=-258/201, 7-15=-258/201
BOT CHORD 2-12=-5740/10242, 12-16=-5740/10242, 11-16=-5740/10242, 11-17=-5740/10242, 17-18=-5740/10242, 10-18=-5740/10242, 10-19=-3895/7329, 19-20=-3895/7329, 20-21=-3895/7329, 9-21=-3895/7329, 9-22=-1755/3190, 22-23=-1755/3190, 8-23=-1755/3190
WEBS 3-12=-1837/3685, 3-10=-4061/2249, 5-10=-3715/7117, 5-9=-6593/3743, 6-9=-4950/9552, 6-8=-8659/4522

NOTES
1) 3-ply truss to be connected together with 10d (0.131"x3") nails as follows:
Top chords connected as follows: 2x4 - 1 row at 0-9-0 oc.
Bottom chords connected as follows: 2x6 - 3 rows staggered at 0-5-0 oc.
Web connected as follows: 2x4 - 1 row at 0-9-0 oc.

2) All loads are considered equally applied to all plies, except if noted as front (F) or back (B) face in the LOAD CASE(S) section. Ply to ply connections have been provided to distribute only loads noted as (F) or (B), unless otherwise indicated.

3) Unbalanced roof live loads have been considered for this design.
4) Wind: ASCE 7-22; Vult=160mph (3-second gust) Vasd=124mph; TCDL=6.0psf; BCDL=6.0psf; h=15ft; Cat. II; Exp C; Enclosed; MWFRS (envelope) exterior (2) zone; cantilever left and right exposed ; end vertical left and right exposed; Lumber DOL=1.60 plate grip DOL=1.60
5) Building Designer / Project engineer responsible for verifying applied roof live load shown covers rain loading requirements specific to the use of this truss component.
6) Provide adequate drainage to prevent water ponding.
7) All plates are MT20 plates unless otherwise indicated.
8) This truss has been designed for a 10.0 psf bottom chord live load nonconcurrent with any other live loads.
9) * This truss has been designed for a live load of 20.0psf on the bottom chord in all areas where a rectangle 3-06-00 tall by 2-00-00 wide will fit between the bottom chord and any other members, with BCDL = 10.0psf.
10) Provide mechanical connection (by others) of truss to bearing plate capable of withstanding 4651 lb uplift at joint 8 and 3303 lb uplift at joint 2.
11) Use Simpson Strong-Tie HGUS26-2 (20-10d Girder, 8-10d Truss) or equivalent at 7-1-8 from the left end to connect truss(es) C1 (2 ply 2x4 SP) to back face of bottom chord.
12) Use Simpson Strong-Tie HUS26 (14-10d Girder, 4-10d Truss) or equivalent spaced at 2-0-0 oc max. starting at 9-0-12 from the left end to 21-0-12 to connect truss(es) C2 (1 ply 2x4 SP), C3 (1 ply 2x4 SP), C4 (1 ply 2x4 SP), C5 (1 ply 2x4 SP), C6 (1 ply 2x4 SP), C7 (1 ply 2x4 SP), C8 (1 ply 2x4 SP) to back face of bottom chord.
13) Fill all nail holes where hanger is in contact with lumber.

LOAD CASE(S) Standard
1) Dead + Roof Live (balanced): Lumber Increase=1.25, Plate Increase=1.25
Uniform Loads (lb/ft)
Vert: 1-6=-70, 6-7=-70, 2-8=-20
Concentrated Loads (lb)
Vert: 16=-2664 (B), 17=-1287 (B), 18=-1365 (B), 19=-1393 (B), 20=-1408 (B), 21=-1407 (B), 22=-1404 (B), 23=-1415 (B)

Job	Truss	Truss Type	Qty	Ply	
55828	J1	Jack-Open	8	1	Job Reference (optional)

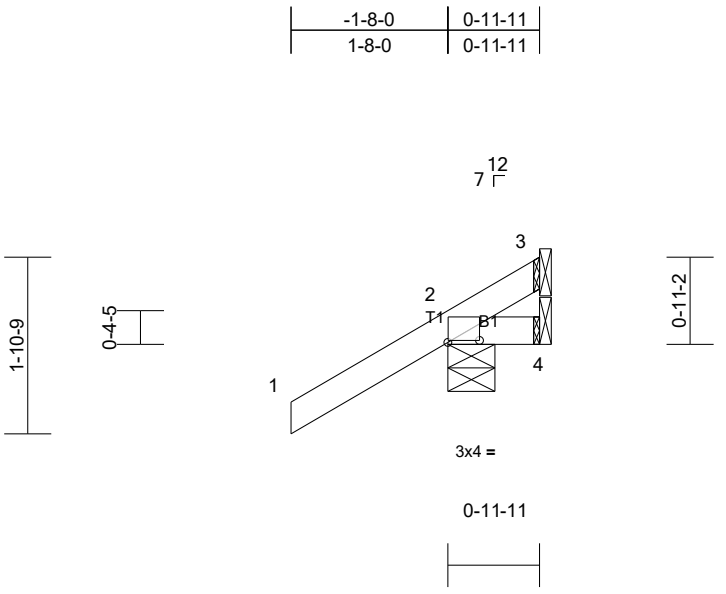

Scale = 1:24.6

Plate Offsets (X, Y): [2:0-4-1,0-0-4]

Loading	(psf)	Spacing	2-0-0	CSI		DEFL	in	(loc)	l/defl	L/d	PLATES	GRIP
TCLL (roof)	20.0	Plate Grip DOL	1.25	TC	0.49	Vert(LL)	0.00	7	>999	360	MT20	244/190
TCDL	15.0	Lumber DOL	1.25	BC	0.12	Vert(CT)	0.00	7	>999	240		
BCLL	0.0*	Rep Stress Incr	YES	WB	0.00	Horz(CT)	0.00	2	n/a	n/a		
BCDL	10.0	Code	FBC2023/TPI2014	Matrix-MP							Weight: 6 lb	FT = 20%

LUMBER
TOP CHORD 2x4 SP No.2
BOT CHORD 2x4 SP No.2

BRACING
TOP CHORD Structural wood sheathing directly applied or 0-11-11 oc purlins.
BOT CHORD Rigid ceiling directly applied or 10-0-0 oc bracing.

MiTek recommends that Stabilizers and required cross bracing be installed during truss erection, in accordance with Stabilizer Installation guide.

REACTIONS (lb/size) 2=261/0-6-0, (min. 0-1-8), 3=-18/ Mechanical, (min. 0-1-8), 4=-40/ Mechanical, (min. 0-1-8)
Max Horiz 2=99 (LC 12)
Max Uplift 2=-188 (LC 12), 3=-18 (LC 1), 4=-42 (LC 19)
Max Grav 2=272 (LC 19), 3=20 (LC 16), 4=47 (LC 12)

FORCES (lb) - Max. Comp./Max. Ten. - All forces 250 (lb) or less except when shown.
BOT CHORD 2-4=-97/274

NOTES
1) Wind: ASCE 7-22; Vult=160mph (3-second gust) Vasd=124mph; TCDL=6.0psf; BCDL=6.0psf; h=15ft; Cat. II; Exp C; Enclosed; MWFRS (envelope) exterior (2) zone and C-C Zone3 zone; cantilever left and right exposed ; end vertical left and right exposed;C-C for members and forces & MWFRS for reactions shown; Lumber DOL=1.60 plate grip DOL=1.60
2) Building Designer / Project engineer responsible for verifying applied roof live load shown covers rain loading requirements specific to the use of this truss component.
3) This truss has been designed for a 10.0 psf bottom chord live load nonconcurrent with any other live loads.
4) * This truss has been designed for a live load of 20.0psf on the bottom chord in all areas where a rectangle 3-06-00 tall by 2-00-00 wide will fit between the bottom chord and any other members.
5) Refer to girder(s) for truss to truss connections.
6) Provide mechanical connection (by others) of truss to bearing plate capable of withstanding 18 lb uplift at joint 3, 188 lb uplift at joint 2 and 42 lb uplift at joint 4.

LOAD CASE(S) Standard

Job	Truss	Truss Type	Qty	Ply	
55828	J3	Jack-Open	8	1	Job Reference (optional)

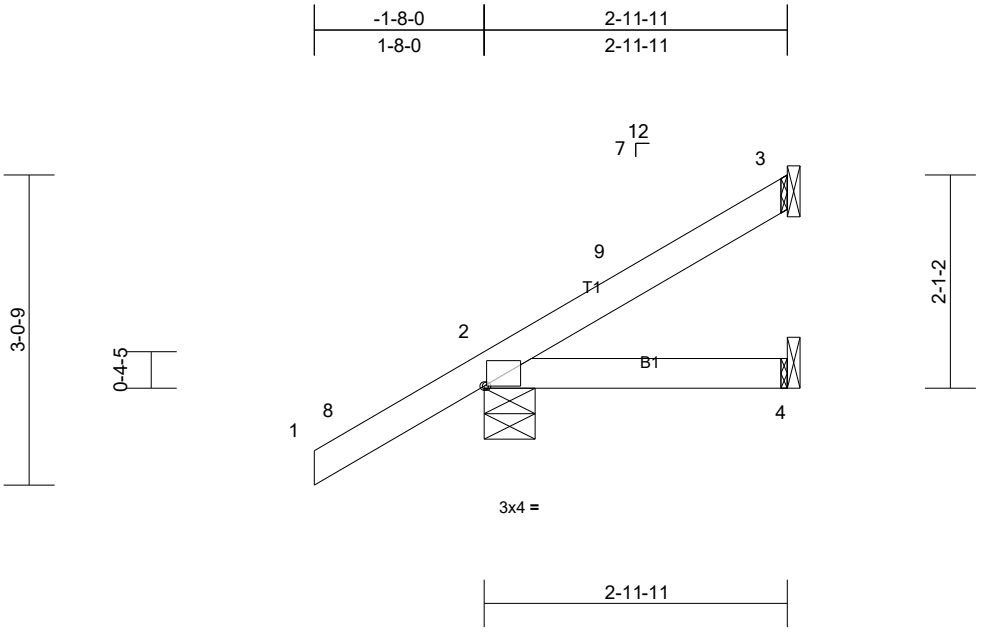

Scale = 1:22.7

Plate Offsets (X, Y): [2:0-0-5,Edge]

Loading	(psf)	Spacing	2-0-0	CSI		DEFL	in	(loc)	l/defl	L/d	PLATES	GRIP
TCLL (roof)	20.0	Plate Grip DOL	1.25	TC	0.49	Vert(LL)	-0.01	4-7	>999	360	MT20	244/190
TCDL	15.0	Lumber DOL	1.25	BC	0.11	Vert(CT)	-0.01	4-7	>999	240		
BCLL	0.0*	Rep Stress Incr	YES	WB	0.00	Horz(CT)	0.00	3	n/a	n/a		
BCDL	10.0	Code	FBC2023/TPI2014	Matrix-MP							Weight: 13 lb	FT = 20%

LUMBER
TOP CHORD 2x4 SP No.2
BOT CHORD 2x4 SP No.2

BRACING
TOP CHORD Structural wood sheathing directly applied or 2-11-11 oc purlins.
BOT CHORD Rigid ceiling directly applied or 10-0-0 oc bracing.

MiTek recommends that Stabilizers and required cross bracing be installed during truss erection, in accordance with Stabilizer Installation guide.

REACTIONS (lb/size) 2=281/0-6-0, (min. 0-1-8), 3=72/Mechanical, (min. 0-1-8), 4=26/Mechanical, (min. 0-1-8)
Max Horiz 2=180 (LC 12)
Max Uplift 2=-145 (LC 12), 3=-81 (LC 12)
Max Grav 2=289 (LC 19), 3=90 (LC 19), 4=49 (LC 3)

FORCES (lb) - Max. Comp./Max. Ten. - All forces 250 (lb) or less except when shown.
TOP CHORD 2-9=-349/111
BOT CHORD 2-4=-77/274

NOTES
1) Wind: ASCE 7-22; Vult=160mph (3-second gust) Vasd=124mph; TCDL=6.0psf; BCDL=6.0psf; h=15ft; Cat. II; Exp C; Enclosed; MWFRS (envelope) exterior (2) zone and C-C Zone3 -1-8-0 to 1-4-0, Zone1 1-4-0 to 2-10-15 zone; cantilever left and right exposed ; end vertical left and right exposed;C-C for members and forces & MWFRS for reactions shown; Lumber DOL=1.60 plate grip DOL=1.60
2) Building Designer / Project engineer responsible for verifying applied roof live load shown covers rain loading requirements specific to the use of this truss component.
3) This truss has been designed for a 10.0 psf bottom chord live load nonconcurrent with any other live loads.
4) * This truss has been designed for a live load of 20.0psf on the bottom chord in all areas where a rectangle 3-06-00 tall by 2-00-00 wide will fit between the bottom chord and any other members.
5) Refer to girder(s) for truss to truss connections.
6) Provide mechanical connection (by others) of truss to bearing plate capable of withstanding 81 lb uplift at joint 3 and 145 lb uplift at joint 2.

LOAD CASE(S) Standard

Job	Truss	Truss Type	Qty	Ply	
55828	J5	Jack-Open	8	1	Job Reference (optional)

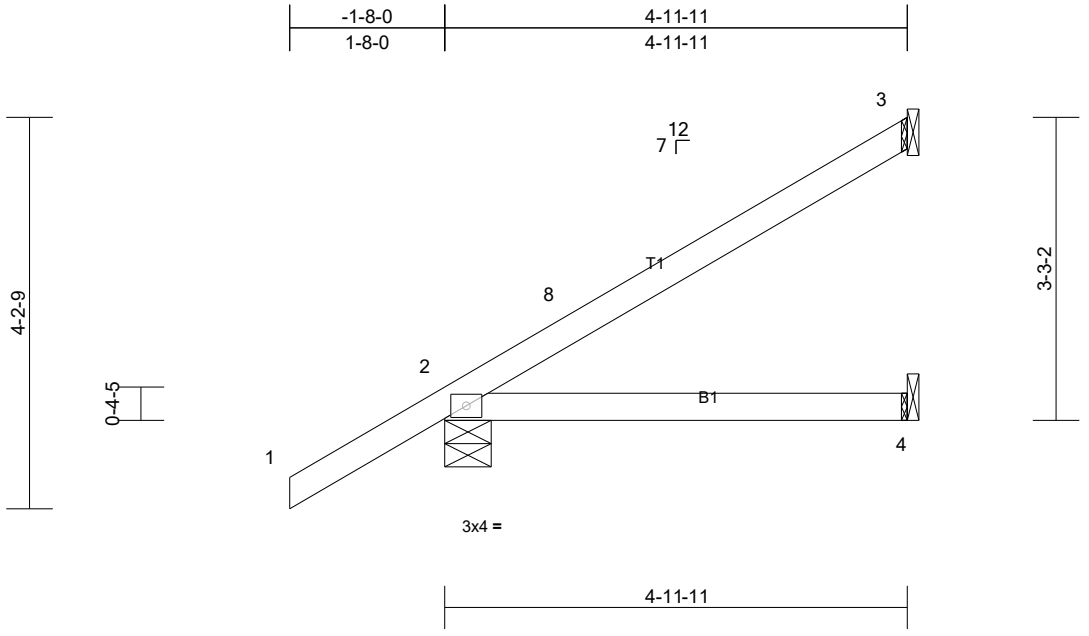

Scale = 1:24.9

Loading	(psf)	Spacing	2-0-0	CSI		DEFL	in	(loc)	l/defl	L/d	PLATES	GRIP
TCLL (roof)	20.0	Plate Grip DOL	1.25	TC	0.58	Vert(LL)	0.06	4-7	>946	360	MT20	244/190
TCDL	15.0	Lumber DOL	1.25	BC	0.43	Vert(CT)	-0.07	4-7	>804	240		
BCLL	0.0*	Rep Stress Incr	YES	WB	0.00	Horz(CT)	0.00	3	n/a	n/a		
BCDL	10.0	Code	FBC2023/TPI2014	Matrix-MP							Weight: 19 lb	FT = 20%

LUMBER
TOP CHORD 2x4 SP No.2
BOT CHORD 2x4 SP No.2

BRACING
TOP CHORD Structural wood sheathing directly applied or 4-11-11 oc purlins.
BOT CHORD Rigid ceiling directly applied or 10-0-0 oc bracing.

MiTek recommends that Stabilizers and required cross bracing be installed during truss erection, in accordance with Stabilizer Installation guide.

REACTIONS (lb/size) 2=357/0-6-0, (min. 0-1-8), 3=141/Mechanical, (min. 0-1-8), 4=60/Mechanical, (min. 0-1-8)
Max Horiz 2=263 (LC 12)
Max Uplift 2=-155 (LC 12), 3=-158 (LC 12)
Max Grav 2=368 (LC 19), 3=173 (LC 19), 4=92 (LC 3)

FORCES (lb) - Max. Comp./Max. Ten. - All forces 250 (lb) or less except when shown.
TOP CHORD 2-8=-422/129

NOTES
1) Wind: ASCE 7-22; Vult=160mph (3-second gust) Vasd=124mph; TCDL=6.0psf; BCDL=6.0psf; h=15ft; Cat. II; Exp C; Enclosed; MWFRS (envelope) exterior (2) zone and C-C Zone3 -1-8-0 to 1-4-0, Zone1 1-4-0 to 4-10-15 zone; cantilever left and right exposed ; end vertical left and right exposed;C-C for members and forces & MWFRS for reactions shown; Lumber DOL=1.60 plate grip DOL=1.60
2) Building Designer / Project engineer responsible for verifying applied roof live load shown covers rain loading requirements specific to the use of this truss component.
3) This truss has been designed for a 10.0 psf bottom chord live load nonconcurrent with any other live loads.
4) * This truss has been designed for a live load of 20.0psf on the bottom chord in all areas where a rectangle 3-06-00 tall by 2-00-00 wide will fit between the bottom chord and any other members.
5) Refer to girder(s) for truss to truss connections.
6) Provide mechanical connection (by others) of truss to bearing plate capable of withstanding 158 lb uplift at joint 3 and 155 lb uplift at joint 2.

LOAD CASE(S) Standard

Job	Truss	Truss Type	Qty	Ply	
55828	J07	Jack-Open	55	1	Job Reference (optional)

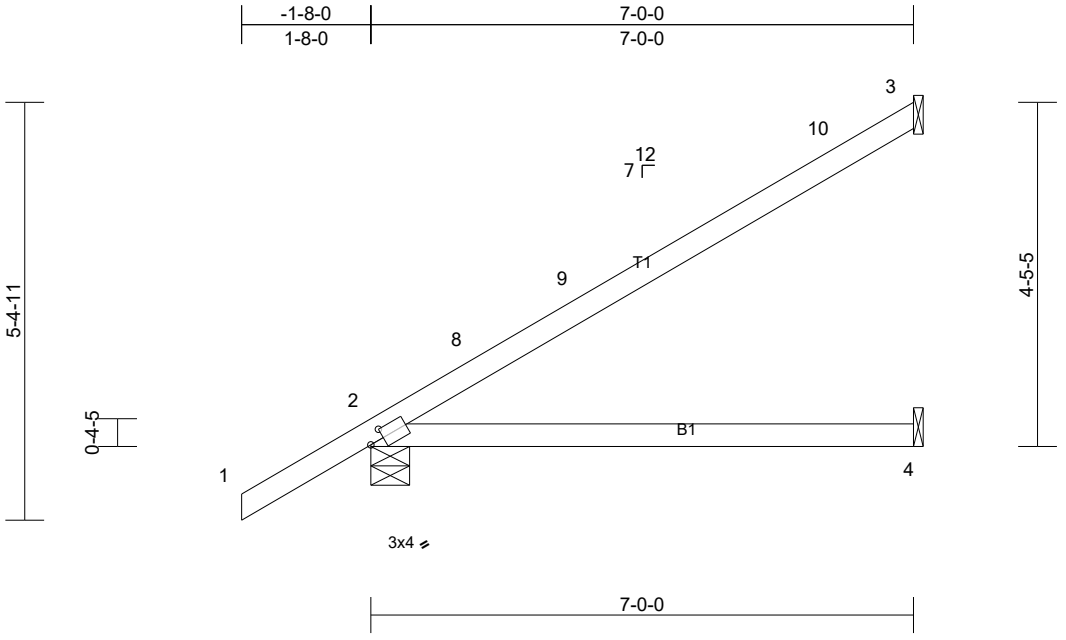

Scale = 1:29.8

Plate Offsets (X, Y): [2:0-2-4,0-1-8]

Loading	(psf)	Spacing	2-0-0	CSI		DEFL	in	(loc)	l/defl	L/d	PLATES	GRIP
TCLL (roof)	20.0	Plate Grip DOL	1.25	TC	0.60	Vert(LL)	0.19	4-7	>432	360	MT20	244/190
TCDL	15.0	Lumber DOL	1.25	BC	0.73	Vert(CT)	-0.25	4-7	>331	240		
BCLL	0.0*	Rep Stress Incr	YES	WB	0.00	Horz(CT)	-0.01	3	n/a	n/a		
BCDL	10.0	Code	FBC2023/TPI2014	Matrix-MP							Weight: 26 lb	FT = 20%

LUMBER
TOP CHORD 2x4 SP 2250F 1.8E
BOT CHORD 2x4 SP No.2

BRACING
TOP CHORD Structural wood sheathing directly applied or 6-0-0 oc purlins.
BOT CHORD Rigid ceiling directly applied or 10-0-0 oc bracing.

MiTek recommends that Stabilizers and required cross bracing be installed during truss erection, in accordance with Stabilizer Installation guide.

REACTIONS (lb/size) 2=443/0-6-0, (min. 0-1-8), 3=212/Mechanical, (min. 0-1-8), 4=86/Mechanical, (min. 0-1-8)
Max Horiz 2=335 (LC 12)
Max Uplift 2=-178 (LC 12), 3=-211 (LC 12)
Max Grav 2=455 (LC 19), 3=259 (LC 19), 4=129 (LC 3)

FORCES (lb) - Max. Comp./Max. Ten. - All forces 250 (lb) or less except when shown.
TOP CHORD 2-8=-495/131

NOTES
1) Wind: ASCE 7-22; Vult=160mph (3-second gust) Vasd=124mph; TCDL=6.0psf; BCDL=6.0psf; h=15ft; Cat. II; Exp C; Enclosed; MWFRS (envelope) exterior (2) zone and C-C Zone3 -1-8-0 to 1-4-0, Zone1 1-4-0 to 6-11-4 zone; cantilever left and right exposed ; end vertical left and right exposed;C-C for members and forces & MWFRS for reactions shown; Lumber DOL=1.60 plate grip DOL=1.60
2) Building Designer / Project engineer responsible for verifying applied roof live load shown covers rain loading requirements specific to the use of this truss component.
3) This truss has been designed for a 10.0 psf bottom chord live load nonconcurrent with any other live loads.
4) * This truss has been designed for a live load of 20.0psf on the bottom chord in all areas where a rectangle 3-06-00 tall by 2-00-00 wide will fit between the bottom chord and any other members.
5) Refer to girder(s) for truss to truss connections.
6) Provide mechanical connection (by others) of truss to bearing plate capable of withstanding 211 lb uplift at joint 3 and 178 lb uplift at joint 2.

LOAD CASE(S) Standard

Job	Truss	Truss Type	Qty	Ply	
55828	J07T	Jack-Open	5	1	Job Reference (optional)

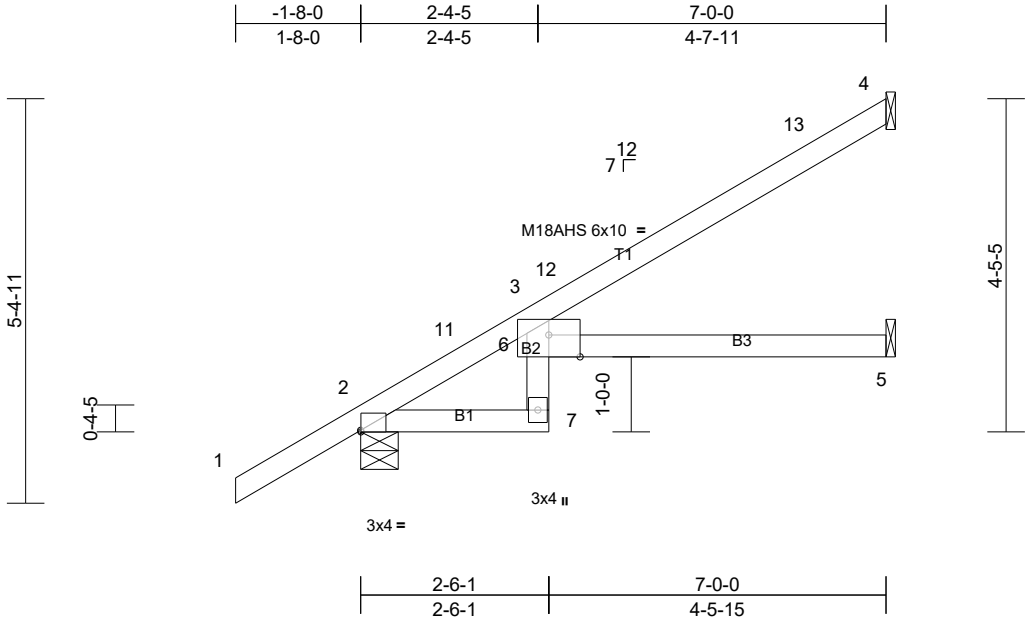

Scale = 1:30.8

Plate Offsets (X, Y): [2:Edge,0-0-4], [3:0-5-0,Edge]

Loading	(psf)	Spacing	2-0-0	CSI		DEFL	in	(loc)	l/defl	L/d	PLATES	GRIP
TCLL (roof)	20.0	Plate Grip DOL	1.25	TC	0.37	Vert(LL)	0.21	5-6	>392	360	MT20	244/190
TCDL	15.0	Lumber DOL	1.25	BC	0.52	Vert(CT)	-0.23	5-6	>367	240	M18AHS	186/179
BCLL	0.0*	Rep Stress Incr	YES	WB	0.00	Horz(CT)	0.08	5	n/a	n/a		
BCDL	10.0	Code	FBC2023/TPI2014	Matrix-MR							Weight: 27 lb	FT = 20%

LUMBER
TOP CHORD 2x4 SP 2250F 1.8E
BOT CHORD 2x4 SP 2250F 1.8E *Except* B2:2x4 SP No.2

BRACING
TOP CHORD Structural wood sheathing directly applied or 6-0-0 oc purlins.
BOT CHORD Rigid ceiling directly applied or 10-0-0 oc bracing.

MiTek recommends that Stabilizers and required cross bracing be installed during truss erection, in accordance with Stabilizer Installation guide.

REACTIONS (lb/size) 2=443/0-6-0, (min. 0-1-8), 4=187/Mechanical, (min. 0-1-8), 5=111/Mechanical, (min. 0-1-8)
Max Horiz 2=335 (LC 12)
Max Uplift 2=-178 (LC 12), 4=-173 (LC 12), 5=-37 (LC 12)
Max Grav 2=455 (LC 19), 4=227 (LC 19), 5=133 (LC 3)

FORCES (lb) - Max. Comp./Max. Ten. - All forces 250 (lb) or less except when shown.
TOP CHORD 2-11=-404/82, 3-11=-365/91
BOT CHORD 2-7=-376/437

NOTES
1) Wind: ASCE 7-22; Vult=160mph (3-second gust) Vasd=124mph; TCDL=6.0psf; BCDL=6.0psf; h=15ft; Cat. II; Exp C; Enclosed; MWFRS (envelope) exterior (2) zone and C-C Zone3 -1-8-0 to 1-4-0, Zone1 1-4-0 to 6-11-4 zone; cantilever left and right exposed ; end vertical left and right exposed;C-C for members and forces & MWFRS for reactions shown; Lumber DOL=1.60 plate grip DOL=1.60
2) Building Designer / Project engineer responsible for verifying applied roof live load shown covers rain loading requirements specific to the use of this truss component.
3) All plates are MT20 plates unless otherwise indicated.
4) This truss has been designed for a 10.0 psf bottom chord live load nonconcurrent with any other live loads.
5) * This truss has been designed for a live load of 20.0psf on the bottom chord in all areas where a rectangle 3-06-00 tall by 2-00-00 wide will fit between the bottom chord and any other members.
6) Refer to girder(s) for truss to truss connections.
7) Provide mechanical connection (by others) of truss to bearing plate capable of withstanding 173 lb uplift at joint 4, 178 lb uplift at joint 2 and 37 lb uplift at joint 5.

LOAD CASE(S) Standard

Job	Truss	Truss Type	Qty	Ply	
55828	PB1	Piggyback	2	1	Job Reference (optional)

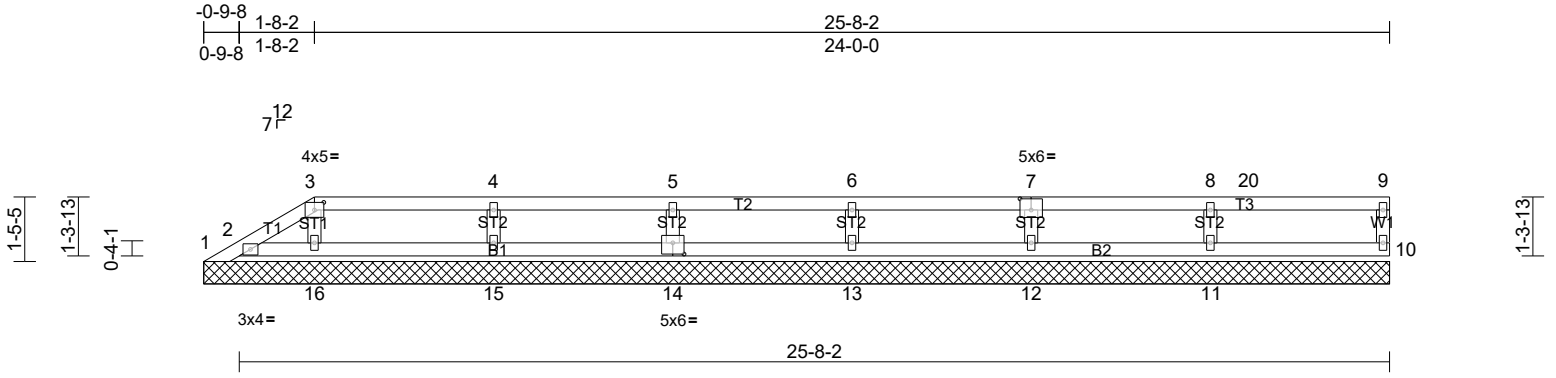

Scale = 1:51.7

Plate Offsets (X, Y): [3:0-2-8,0-2-1], [7:0-3-0,0-3-0], [14:0-3-0,0-3-0]

Loading	(psf)	Spacing	2-0-0	CSI		DEFL	in	(loc)	l/defl	L/d	PLATES	GRIP
TCLL (roof)	20.0	Plate Grip DOL	1.25	TC	0.21	Vert(LL)	n/a	-	n/a	999	MT20	244/190
TCDL	15.0	Lumber DOL	1.25	BC	0.13	Vert(TL)	n/a	-	n/a	999		
BCLL	0.0*	Rep Stress Incr	YES	WB	0.08	Horiz(TL)	0.00	10	n/a	n/a		
BCDL	10.0	Code	FBC2023/TPI2014	Matrix-MS							Weight: 86 lb	FT = 20%

LUMBER
TOP CHORD 2x4 SP No.2
BOT CHORD 2x4 SP No.2
WEBS 2x4 SP No.3
OTHERS 2x4 SP No.3

BRACING
TOP CHORD Structural wood sheathing directly applied or 6-0-0 oc purlins, except end verticals.
BOT CHORD Rigid ceiling directly applied or 10-0-0 oc bracing.

MiTek recommends that Stabilizers and required cross bracing be installed during truss erection, in accordance with Stabilizer Installation guide.

REACTIONS All bearings 26-5-11.
(lb) - Max Horiz 1=82 (LC 9)
Max Uplift All uplift 100 (lb) or less at joint(s) 1, 2, 10, 17 except 11=-201 (LC 8), 12=-194 (LC 13), 13=-191 (LC 8), 14=-193 (LC 12), 15=-208 (LC 8), 16=-136 (LC 12)
Max Grav All reactions 250 (lb) or less at joint (s) 1, 2, 10, 16, 17 except 11=384 (LC 1), 12=354 (LC 1), 13=364 (LC 1), 14=354 (LC 1), 15=385 (LC 1)

FORCES (lb) - Max. Comp./Max. Ten. - All forces 250 (lb) or less except when shown.
WEBS 8-11=-298/251, 7-12=-275/241, 6-13=-283/239, 5-14=-274/240, 4-15=-302/256

NOTES
1) Wind: ASCE 7-22; Vult=160mph (3-second gust) Vasd=124mph; TCDL=6.0psf; BCDL=6.0psf; h=15ft; Cat. II; Exp C; Enclosed; MWFRS (envelope) exterior (2) zone and C-C Zone3 0-3-8 to 2-5-11, Zone2 2-5-11 to 6-5-11, Zone1 6-5-11 to 26-3-15 zone; cantilever left and right exposed ; end vertical left and right exposed;C-C for members and forces & MWFRS for reactions shown; Lumber DOL=1.60 plate grip DOL=1.60
2) Building Designer / Project engineer responsible for verifying applied roof live load shown covers rain loading requirements specific to the use of this truss component.
3) Provide adequate drainage to prevent water ponding.
4) All plates are 2x4 MT20 unless otherwise indicated.
5) Gable requires continuous bottom chord bearing.
6) This truss has been designed for a 10.0 psf bottom chord live load nonconcurrent with any other live loads.
7) * This truss has been designed for a live load of 20.0psf on the bottom chord in all areas where a rectangle 3-06-00 tall by 2-00-00 wide will fit between the bottom chord and any other members.
8) Provide mechanical connection (by others) of truss to bearing plate capable of withstanding 100 lb uplift at joint (s) 1, 10, 2, 2 except (jt=lb) 11=201, 12=194, 13=191, 14=192, 15=207, 16=135.
9) See Standard Industry Piggyback Truss Connection Detail for Connection to base truss as applicable, or consult qualified building designer.

LOAD CASE(S) Standard

Job	Truss	Truss Type	Qty	Ply	
55828	PB2	Piggyback	2	1	Job Reference (optional)

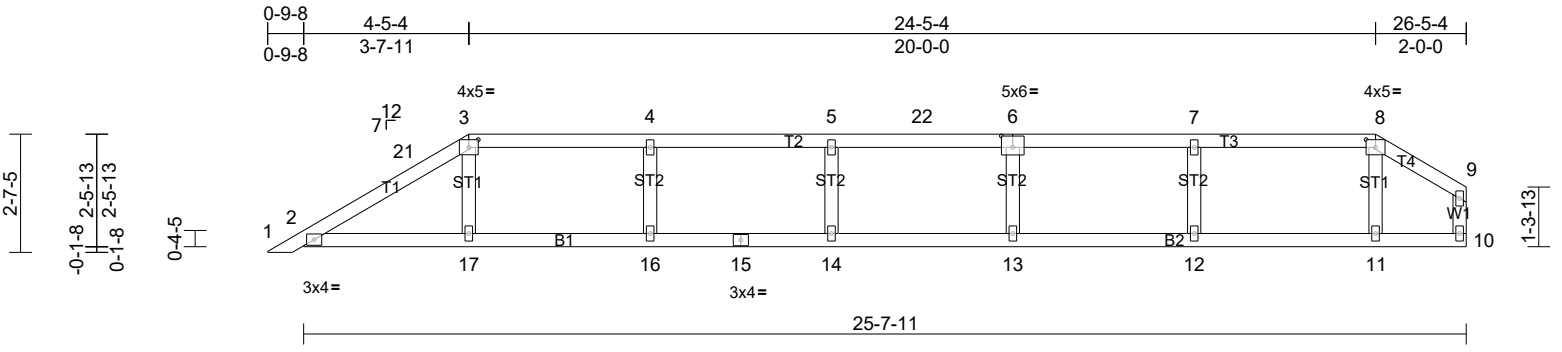

Scale = 1:51

Plate Offsets (X, Y): [3:0-2-8,0-2-1], [6:0-3-0,0-3-0], [8:0-2-8,0-2-1]

Loading	(psf)	Spacing	2-0-0	CSI		DEFL	in	(loc)	l/defl	L/d	PLATES	GRIP
TCLL (roof)	20.0	Plate Grip DOL	1.25	TC	0.21	Vert(LL)	n/a	-	n/a	999	MT20	244/190
TCDL	15.0	Lumber DOL	1.25	BC	0.11	Vert(TL)	n/a	-	n/a	999		
BCLL	0.0*	Rep Stress Incr	YES	WB	0.08	Horiz(TL)	0.00	10	n/a	n/a		
BCDL	10.0	Code	FBC2023/TPI2014	Matrix-MS							Weight: 97 lb	FT = 20%

LUMBER
TOP CHORD 2x4 SP No.2
BOT CHORD 2x4 SP No.2
WEBS 2x4 SP No.3
OTHERS 2x4 SP No.3

BRACING
TOP CHORD Structural wood sheathing directly applied or 6-0-0 oc purlins, except end verticals.
BOT CHORD Rigid ceiling directly applied or 10-0-0 oc bracing.

MiTek recommends that Stabilizers and required cross bracing be installed during truss erection, in accordance with Stabilizer Installation guide.

REACTIONS All bearings 26-5-11.
(lb) - Max Horiz 1=136 (LC 9)
Max Uplift All uplift 100 (lb) or less at joint(s) 10 except 1=-248 (LC 19), 2=-303 (LC 12), 11=-124 (LC 13), 12=-209 (LC 9), 13=-186 (LC 8), 14=-186 (LC 9), 16=-214 (LC 8), 17=-167 (LC 12), 18=-303 (LC 12)
Max Grav All reactions 250 (lb) or less at joint (s) 1, 10 except 2=487 (LC 19), 11=267 (LC 26), 12=387 (LC 25), 13=355 (LC 26), 14=358 (LC 25), 16=383 (LC 26), 17=325 (LC 25), 18=487 (LC 19)

FORCES (lb) - Max. Comp./Max. Ten. - All forces 250 (lb) or less except when shown.
WEBS 7-12=-303/258, 6-13=-276/233, 5-14=-276/233, 4-16=-303/261

NOTES
1) Unbalanced roof live loads have been considered for this design.
2) Wind: ASCE 7-22; Vult=160mph (3-second gust) Vasd=124mph; TCDL=6.0psf; BCDL=6.0psf; h=15ft; Cat. II; Exp C; Enclosed; MWFRS (envelope) exterior (2) zone and C-C Zone3 0-3-11 to 3-3-11, Zone1 3-3-11 to 4-5-11, Zone2 4-5-11 to 8-5-11, Zone1 8-5-11 to 24-5-11, Zone3 24-5-11 to 26-3-15 zone; cantilever left and right exposed ; end vertical left and right exposed;C-C for members and forces & MWFRS for reactions shown; Lumber DOL=1.60 plate grip DOL=1.60
3) Truss designed for wind loads in the plane of the truss only. For studs exposed to wind (normal to the face), see Standard Industry Gable End Details as applicable, or consult qualified building designer as per ANSI/TPI 1.
4) Building Designer / Project engineer responsible for verifying applied roof live load shown covers rain loading requirements specific to the use of this truss component.
5) Provide adequate drainage to prevent water ponding.
6) All plates are 2x4 MT20 unless otherwise indicated.
7) Gable requires continuous bottom chord bearing.
8) Gable studs spaced at 4-0-0 oc.
9) This truss has been designed for a 10.0 psf bottom chord live load nonconcurrent with any other live loads.
10) * This truss has been designed for a live load of 20.0psf on the bottom chord in all areas where a rectangle 3-06-00 tall by 2-00-00 wide will fit between the bottom chord and any other members.
11) Provide mechanical connection (by others) of truss to bearing plate capable of withstanding 100 lb uplift at joint (s) 10 except (jt=lb) 1=248, 2=302, 11=124, 12=208, 13=186, 14=185, 16=213, 17=167, 2=302.
12) See Standard Industry Piggyback Truss Connection Detail for Connection to base truss as applicable, or consult qualified building designer.

LOAD CASE(S) Standard

Job	Truss	Truss Type	Qty	Ply	
55828	PB3	Piggyback	2	1	Job Reference (optional)

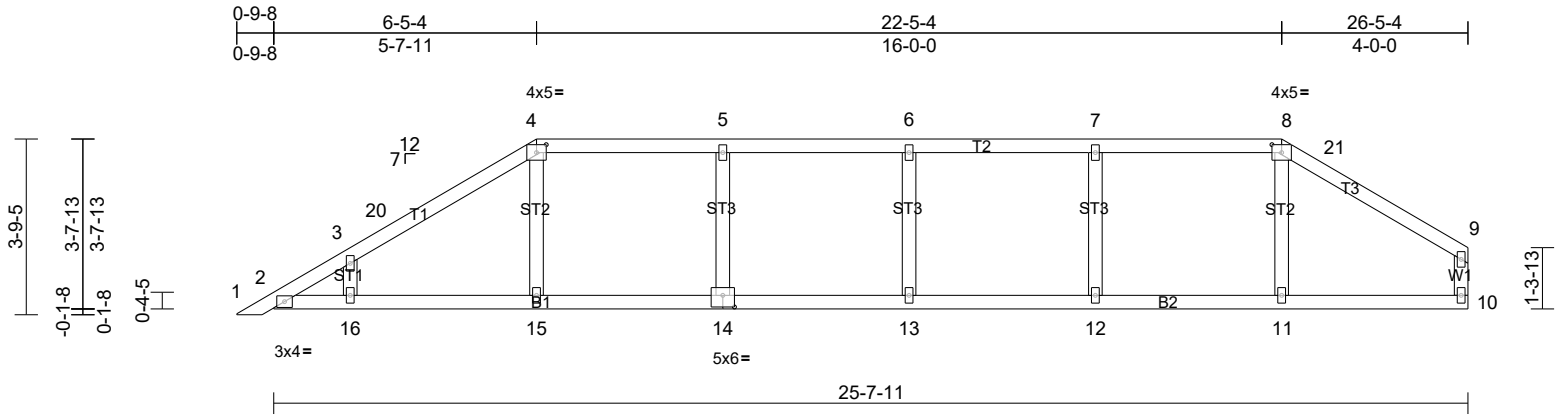

Scale = 1:49.7

Plate Offsets (X, Y): [4:0-2-8,0-2-1], [8:0-2-8,0-2-1], [14:0-3-0,0-3-0]

Loading	(psf)	Spacing	2-0-0	CSI		DEFL	in	(loc)	l/defl	L/d	PLATES	GRIP
TCLL (roof)	20.0	Plate Grip DOL	1.25	TC	0.21	Vert(LL)	n/a	-	n/a	999	MT20	244/190
TCDL	15.0	Lumber DOL	1.25	BC	0.13	Vert(CT)	n/a	-	n/a	999		
BCLL	0.0*	Rep Stress Incr	YES	WB	0.10	Horz(CT)	0.00	10	n/a	n/a		
BCDL	10.0	Code	FBC2023/TPI2014	Matrix-MS							Weight: 105 lb	FT = 20%

LUMBER

TOP CHORD 2x4 SP No.2
BOT CHORD 2x4 SP No.2
WEBS 2x4 SP No.3
OTHERS 2x4 SP No.3

BRACING

TOP CHORD Structural wood sheathing directly applied or 6-0-0 oc purlins, except end verticals.
BOT CHORD Rigid ceiling directly applied or 10-0-0 oc bracing.

MiTek recommends that Stabilizers and required cross bracing be installed during truss erection, in accordance with Stabilizer Installation guide.

REACTIONS All bearings 25-7-11.
(lb) - Max Horiz 2=187 (LC 11), 17=187 (LC 11)
Max Uplift All uplift 100 (lb) or less at joint(s) 2, 17 except 10=-144 (LC 13), 11=-126 (LC 13), 12=-219 (LC 9), 13=-178 (LC 8), 14=-216 (LC 8), 15=-161 (LC 9), 16=-271 (LC 12)
Max Grav All reactions 250 (lb) or less at joint (s) 2, 10, 17 except 11=324 (LC 26), 12=382 (LC 25), 13=353 (LC 1), 14=383 (LC 26), 15=328 (LC 25), 16=391 (LC 19)

FORCES (lb) - Max. Comp./Max. Ten. - All forces 250 (lb) or less except when shown.
WEBS 7-12=-303/265, 6-13=-272/226, 5-14=-303/263, 3-16=-349/337

NOTES

1) Unbalanced roof live loads have been considered for this design.
2) Wind: ASCE 7-22; Vult=160mph (3-second gust) Vasd=124mph; TCDL=6.0psf; BCDL=6.0psf; h=15ft; Cat. II; Exp C; Enclosed; MWFRS (envelope) exterior (2) zone and C-C Zone3 0-3-11 to 3-3-11, Zone1 3-3-11 to 6-5-11, Zone2 6-5-11 to 10-5-11, Zone1 10-5-11 to 22-5-11, Zone3 22-5-11 to 26-3-15 zone; cantilever left and right exposed ; end vertical left and right exposed;C-C for members and forces & MWFRS for reactions shown; Lumber DOL=1.60 plate grip DOL=1.60
3) Truss designed for wind loads in the plane of the truss only. For studs exposed to wind (normal to the face), see Standard Industry Gable End Details as applicable, or consult qualified building designer as per ANSI/TPI 1.
4) Building Designer / Project engineer responsible for verifying applied roof live load shown covers rain loading requirements specific to the use of this truss component.
5) Provide adequate drainage to prevent water ponding.
6) All plates are 2x4 MT20 unless otherwise indicated.
7) Gable requires continuous bottom chord bearing.
8) Gable studs spaced at 4-0-0 oc.
9) This truss has been designed for a 10.0 psf bottom chord live load nonconcurrent with any other live loads.
10) * This truss has been designed for a live load of 20.0psf on the bottom chord in all areas where a rectangle 3-06-00 tall by 2-00-00 wide will fit between the bottom chord and any other members.
11) Provide mechanical connection (by others) of truss to bearing plate capable of withstanding 100 lb uplift at joint (s) 2, 2 except (jt=lb) 10=144, 11=126, 12=218, 13=178, 14=216, 15=160, 16=270.
12) See Standard Industry Piggyback Truss Connection Detail for Connection to base truss as applicable, or consult qualified building designer.

LOAD CASE(S) Standard

Job	Truss	Truss Type	Qty	Ply	
55828	PB4	Piggyback	2	1	Job Reference (optional)

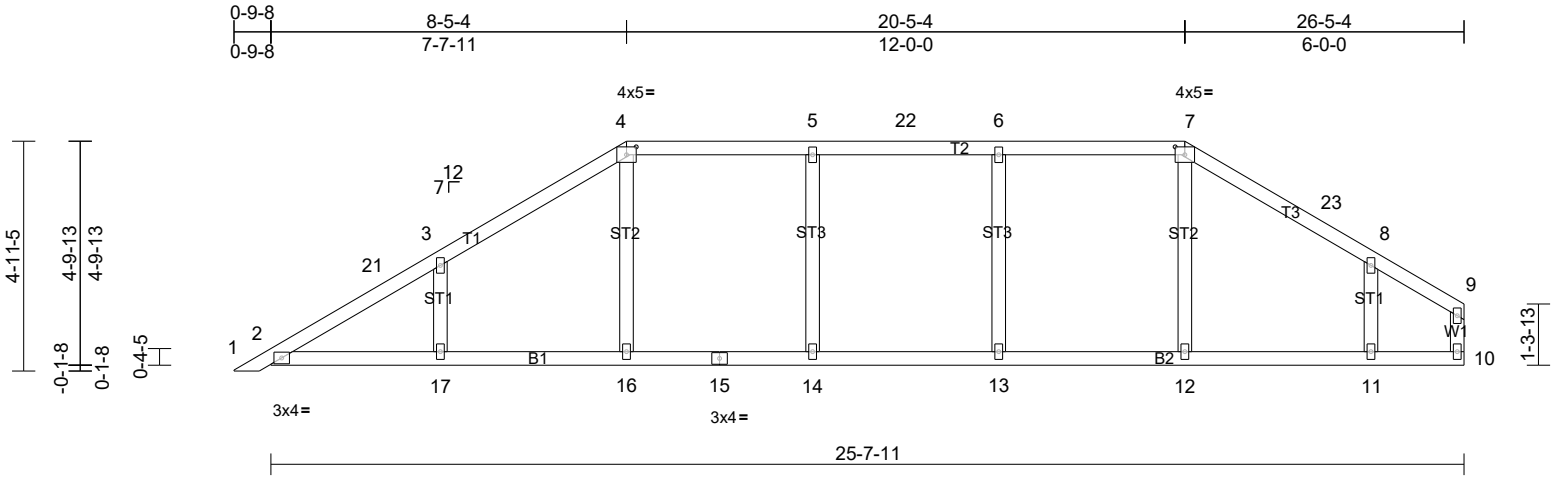

Scale = 1:49.7

Plate Offsets (X, Y): [4:0-2-8,0-2-1], [7:0-2-8,0-2-1]

Loading	(psf)	Spacing	2-0-0	CSI		DEFL	in	(loc)	l/defl	L/d	PLATES	GRIP
TCLL (roof)	20.0	Plate Grip DOL	1.25	TC	0.24	Vert(LL)	n/a	-	n/a	999	MT20	244/190
TCDL	15.0	Lumber DOL	1.25	BC	0.17	Vert(CT)	n/a	-	n/a	999		
BCLL	0.0*	Rep Stress Incr	YES	WB	0.12	Horz(CT)	0.00	10	n/a	n/a		
BCDL	10.0	Code	FBC2023/TPI2014	Matrix-MS							Weight: 113 lb	FT = 20%

LUMBER

TOP CHORD 2x4 SP No.2
BOT CHORD 2x4 SP No.2
WEBS 2x4 SP No.3
OTHERS 2x4 SP No.3

BRACING

TOP CHORD Structural wood sheathing directly applied or 6-0-0 oc purlins, except end verticals.
BOT CHORD Rigid ceiling directly applied or 10-0-0 oc bracing.

MiTek recommends that Stabilizers and required cross bracing be installed during truss erection, in accordance with Stabilizer Installation guide.

REACTIONS All bearings 25-7-11.
(lb) - Max Horiz 2=240 (LC 11), 18=240 (LC 11)
Max Uplift All uplift 100 (lb) or less at joint(s) 2, 10, 12, 18 except 11=-295 (LC 13), 13=-211 (LC 9), 14=-210 (LC 8), 16=-145 (LC 9), 17=-328 (LC 12)
Max Grav All reactions 250 (lb) or less at joint (s) 2, 10, 18 except 11=452 (LC 20), 12=396 (LC 28), 13=457 (LC 27), 14=460 (LC 28), 16=384 (LC 19), 17=540 (LC 19)

FORCES (lb) - Max. Comp./Max. Ten. - All forces 250 (lb) or less except when shown.
WEBS 7-12=-258/150, 6-13=-298/259, 5-14=-299/258, 3-17=-380/352, 8-11=-335/326

NOTES

1) Unbalanced roof live loads have been considered for this design.
2) Wind: ASCE 7-22; Vult=160mph (3-second gust) Vasd=124mph; TCDL=6.0psf; BCDL=6.0psf; h=15ft; Cat. II; Exp C; Enclosed; MWFRS (envelope) exterior (2) zone and C-C Zone3 0-3-11 to 3-3-11, Zone1 3-3-11 to 8-5-11, Zone2 8-5-11 to 12-5-11, Zone1 12-5-11 to 20-5-11, Zone2 20-5-11 to 24-5-11, Zone1 24-5-11 to 26-3-15 zone; cantilever left and right exposed ; end vertical left and right exposed;C-C for members and forces & MWFRS for reactions shown; Lumber DOL=1.60 plate grip DOL=1.60
3) Truss designed for wind loads in the plane of the truss only. For studs exposed to wind (normal to the face), see Standard Industry Gable End Details as applicable, or consult qualified building designer as per ANSI/TPI 1.
4) Building Designer / Project engineer responsible for verifying applied roof live load shown covers rain loading requirements specific to the use of this truss component.
5) Provide adequate drainage to prevent water ponding.
6) All plates are 2x4 MT20 unless otherwise indicated.
7) Gable requires continuous bottom chord bearing.
8) Gable studs spaced at 4-0-0 oc.
9) This truss has been designed for a 10.0 psf bottom chord live load nonconcurrent with any other live loads.
10) * This truss has been designed for a live load of 20.0psf on the bottom chord in all areas where a rectangle 3-06-00 tall by 2-00-00 wide will fit between the bottom chord and any other members, with BCDL = 10.0psf.
11) Provide mechanical connection (by others) of truss to bearing plate capable of withstanding 100 lb uplift at joint (s) 10, 2, 12, 2 except (jt=lb) 13=211, 14=209, 16=144, 17=328, 11=295.
12) See Standard Industry Piggyback Truss Connection Detail for Connection to base truss as applicable, or consult qualified building designer.

LOAD CASE(S) Standard

Job	Truss	Truss Type	Qty	Ply	
55828	PB5	Piggyback	2	1	Job Reference (optional)

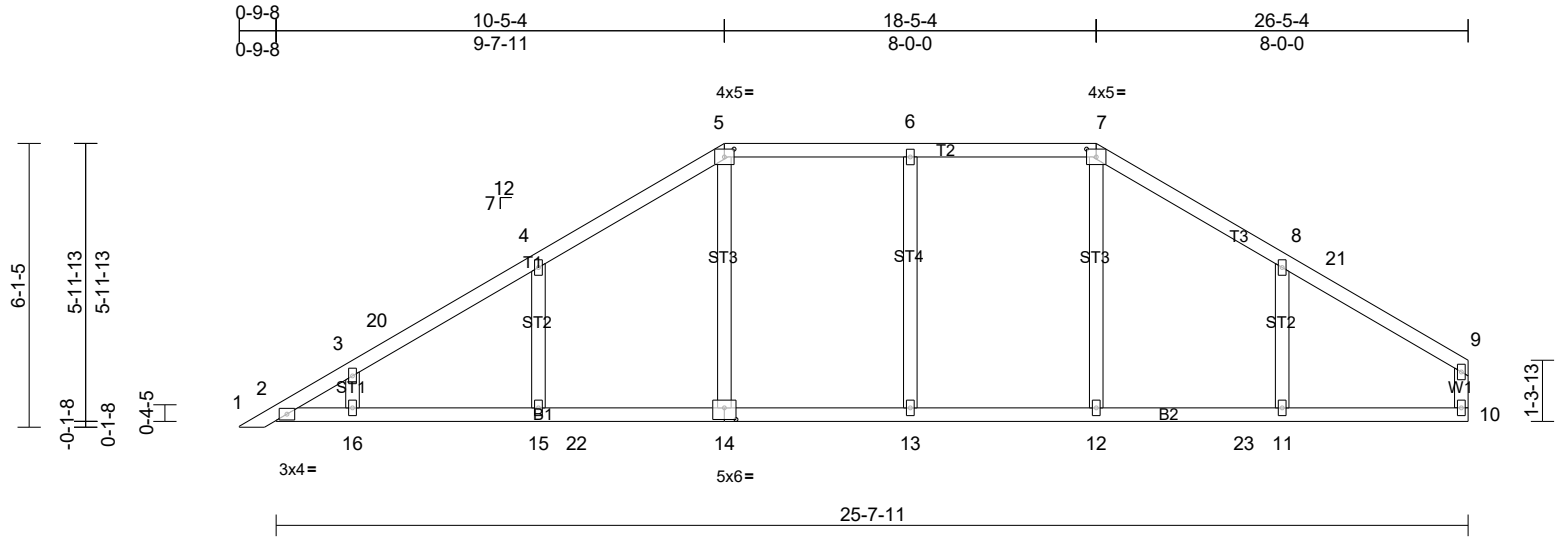

Scale = 1:49.8

Plate Offsets (X, Y): [5:0-2-8,0-2-1], [7:0-2-8,0-2-1], [14:0-3-0,0-3-0]

Loading	(psf)	Spacing	2-0-0	CSI		DEFL	in	(loc)	l/defl	L/d	PLATES	GRIP
TCLL (roof)	20.0	Plate Grip DOL	1.25	TC	0.25	Vert(LL)	n/a	-	n/a	999	MT20	244/190
TCDL	15.0	Lumber DOL	1.25	BC	0.17	Vert(CT)	n/a	-	n/a	999		
BCLL	0.0*	Rep Stress Incr	YES	WB	0.20	Horz(CT)	0.00	10	n/a	n/a		
BCDL	10.0	Code	FBC2023/TPI2014	Matrix-MS							Weight: 118 lb	FT = 20%

LUMBER

TOP CHORD 2x4 SP No.2
BOT CHORD 2x4 SP No.2
WEBS 2x4 SP No.3
OTHERS 2x4 SP No.3

BRACING

TOP CHORD Structural wood sheathing directly applied or 6-0-0 oc purlins, except end verticals.
BOT CHORD Rigid ceiling directly applied or 10-0-0 oc bracing.

MiTek recommends that Stabilizers and required cross bracing be installed during truss erection, in accordance with Stabilizer Installation guide.

REACTIONS All bearings 25-7-11.

(lb) - Max Horiz 2=293 (LC 11), 17=293 (LC 11)
Max Uplift All uplift 100 (lb) or less at joint(s) 10, 12 except 2=-135 (LC 8), 11=-337 (LC 13), 13=-230 (LC 9), 14=-151 (LC 9), 15=-318 (LC 12), 16=-230 (LC 12), 17=-135 (LC 8)
Max Grav All reactions 250 (lb) or less at joint (s) 2, 10, 17 except 11=565 (LC 20), 12=390 (LC 2), 13=473 (LC 27), 14=428 (LC 22), 15=547 (LC 19), 16=385 (LC 19)

FORCES (lb) - Max. Comp./Max. Ten. - All forces 250 (lb) or less except when shown.

TOP CHORD 2-3=-309/275, 3-20=-293/243, 4-20=-239/264, 4-5=-250/327, 5-6=-187/314, 6-7=-187/314, 7-8=-218/293
WEBS 6-13=-319/279, 4-15=-383/366, 3-16=-280/283, 8-11=-394/381

NOTES

1) Unbalanced roof live loads have been considered for this design.
2) Wind: ASCE 7-22; Vult=160mph (3-second gust) Vasd=124mph; TCDL=6.0psf; BCDL=6.0psf; h=15ft; Cat. II; Exp C; Enclosed; MWFRS (envelope) exterior (2) zone and C-C Zone3 0-3-11 to 3-3-11, Zone1 3-3-11 to 10-5-11, Zone2 10-5-11 to 14-5-11, Zone1 14-5-11 to 18-5-11, Zone2 18-5-11 to 22-5-11, Zone1 22-5-11 to 26-3-15 zone; cantilever left and right exposed ; end vertical left and right exposed;C-C for members and forces & MWFRS for reactions shown; Lumber DOL=1.60 plate grip DOL=1.60
3) Truss designed for wind loads in the plane of the truss only. For studs exposed to wind (normal to the face), see Standard Industry Gable End Details as applicable, or consult qualified building designer as per ANSI/TPI 1.
4) Building Designer / Project engineer responsible for verifying applied roof live load shown covers rain loading requirements specific to the use of this truss component.
5) Provide adequate drainage to prevent water ponding.
6) All plates are 2x4 MT20 unless otherwise indicated.
7) Gable requires continuous bottom chord bearing.
8) Gable studs spaced at 4-0-0 oc.
9) This truss has been designed for a 10.0 psf bottom chord live load nonconcurrent with any other live loads.
10) * This truss has been designed for a live load of 20.0psf on the bottom chord in all areas where a rectangle 3-06-00 tall by 2-00-00 wide will fit between the bottom chord and any other members, with BCDL = 10.0psf.
11) Provide mechanical connection (by others) of truss to bearing plate capable of withstanding 100 lb uplift at joint (s) 10, 12 except (jt=lb) 2=135, 13=230, 14=151, 15=317, 16=230, 11=337, 2=135.
12) See Standard Industry Piggyback Truss Connection Detail for Connection to base truss as applicable, or consult qualified building designer.

LOAD CASE(S) Standard