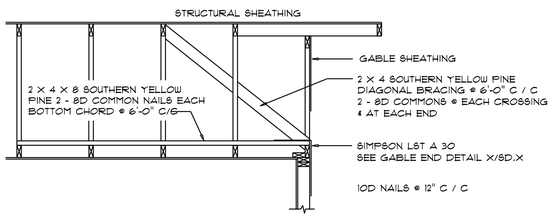

END WALL BRACING FOR CEILING DIAPHRAGM

NTS (ALTERNATIVE TO BALLOON FRAMING)

NOTE: ALL WOOD TO BE NUMBER 2 GRADE SOUTHERN YELLOW PINE

A

ROOF SHEATHING FASTENINGS			
NAILING ZONE	SHEATHING TYPE	FASTENER	SPACING
1	7/16 " O.S.B. OR 15/32 CDX	2 1/2"x0.131" RING SHANK NAILS or 3"x0.120" RING SHANK NAILS	6 in. o.c. EDGE 12 in. o.c. FIELD
2			6 in. o.c. EDGE 6 in. o.c. FIELD
3			4 in. o.c. @ GABLE ENDWALL OR GABLE TRUSS 6 in. o.c. EDGE 6 in. o.c. FIELD

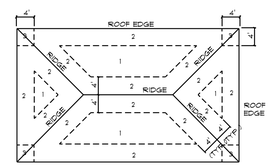

ROOF SHEATHING NAILING ZONES (HIP ROOF)

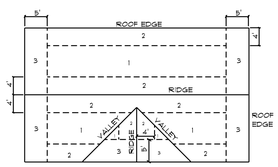

ROOF SHEATHING NAILING ZONES (GABLE ROOF)

Roof Nail Pattern DET.

SCALE: NONE

B

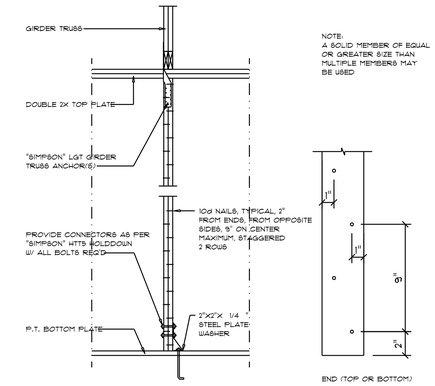

Girder Truss Column DET.

SCALE: 1/2" = 1'-0"

C

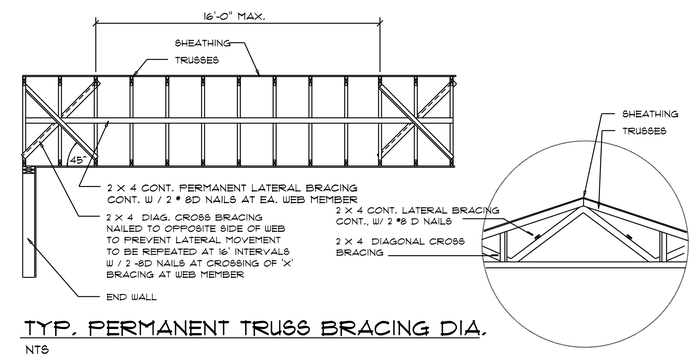

TYP. PERMANENT TRUSS BRACING DIA.

NTS

NOTE: ALL WOOD TO BE NUMBER 2 GRADE SOUTHERN YELLOW PINE

Truss Bracing DETAILS

SCALE: AS NOTED

D

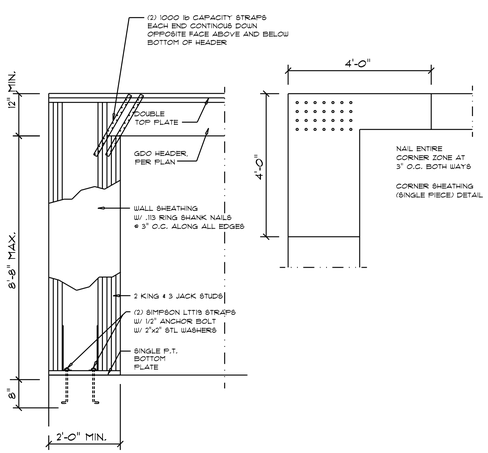

Garage End Wall DETAILS

SCALE: 1/2" = 1'-0"

G

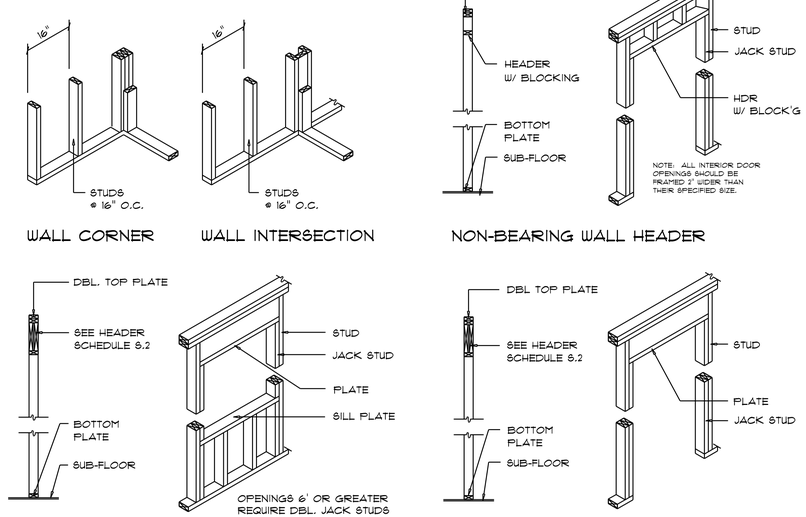

Wall Framing/Header DETAILS

SCALE: NONE

F

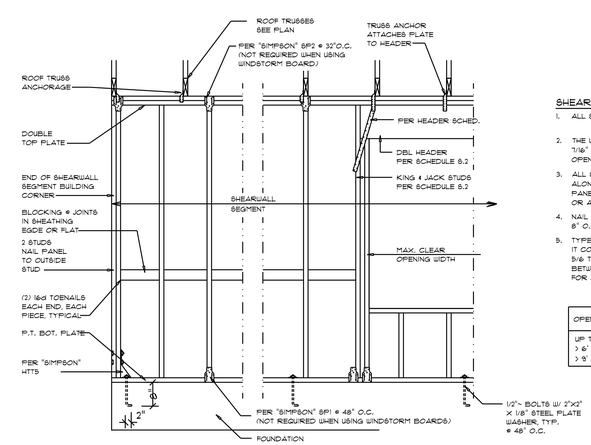

SHEARWALL NOTES:

1. ALL SHEARWALLS SHALL BE TYPE 2 SHEARWALLS
2. THE WALL SHALL BE ENTIRELY SHEATHED WITH 7/16" WINDSTORM BD INCLUDING AREAS ABOVE AND BELOW OPENINGS
3. ALL SHEATHING SHALL BE ATTACHED TO FRAMING ALONG ALL FOUR EDGES WITH JOINTS FOR ADJACENT PANELS OCCURING OVER COMMON FRAMING MEMBERS OR ALONG BLOCKING.
4. NAIL SPACING SHALL BE 4" O.C. EDGES AND 8" O.C. IN THE FIELD.
5. TYPE 2 SHEARWALLS ARE DESIGNED FOR THE OPENING IT CONTAINS. MAXIMUM HEIGHT OF OPENING SHALL BE 5/6 TIMES THE WALL HEIGHT. THE MINIMUM DISTANCE BETWEEN OPENINGS SHALL BE THE WALL HEIGHT/3.5 FOR 8'-0" WALLS (7'-3").

OPENING WIDTH	SILL PLATES	16d TOE NAILS EACH END
UP TO 6'-0"	(1) 2x4 OR (1) 2x6	1
> 6' TO 9'-0"	(3) 2x4 OR (1) 2x6	2
> 9' TO 12'-0"	(5) 2x4 OR (2) 2x6	3

Shear Wall DETAILS

SCALE: NONE

E

NV5 PRIVATE PROVIDER
Plans reviewed in accordance with Florida Statues 553.791.

Printed copies of this document are NOT considered signed, and the signature must be verified on any electronic copies.

I hereby certify that, to the best of my knowledge and belief, the plans submitted comply with the Florida Building Code and all local amendments in effect on the date of the initial permit application. Review for code compliance does not imply that the Building Department has reviewed nor is to be held to permit or approve any violation of City, County, State or Federal regulation, ordinance, or code of law.

Jason McClellan P.E. License # 0 CMC Engineering Services, Inc. of Jacksonville 8889 Cypress Green Drive Jacksonville, FL 32256

Nicholas Geisler Digitally signed by Nicholas Geisler Date: 2025.02.26 16:06:27 -05'00'

AR0007005

REVISIONS	
May 1st, 2023	

A NEW SPEC HOUSE FOR:
Parrish Builders Group — Spec #2
GHILCHRIST COUNTY, FL

NICHOLAS PAUL GEISLER ARCHITECT
N.C.A.R.B. Certified
1788 NW Brown Rd.
Lake City, FL 32055
(386) 755-8021

SHEET NUMBER
S.4
OF 4 SHEETS