FLORIDA BUILDING CODE
Compliance Summary

TYPE OF CONSTRUCTION

Roof: Hip Construction, Wood Trusses @ 24" O.C.
Walls: 2x4 Wood Studs @ 16" O.C.
Floor: 4" Thk. Concrete Slab W/ Fibermesh Concrete Additive
Foundation: Continuous Footer/Stem Wall

ROOF DECKING

Material: 1/2" CDX Plywood or 7/16" O.S.B.
Sheet Size: 48"x96" Sheets Perpendicular to Roof Framing
Fasteners: 8d Ring Shank per schedule on sheet S.4

SHEARWALLS

Material: 7/16" O.S.B. WINDSTORM BOARD
Sheet Size: 48"x96" Sheets Placed Vertical
Fasteners: 8d Common Nails @ 4" O.C. Edges & 8" O.C. Interior
Dragstrut: Double Top Plate (S.Y.P.) W/16d Nails @ 12" O.C.
Wall Studs: 2x4 Studs @ 16" O.C.

HURRICANE UPLIFT CONNECTORS

Truss Anchors: SIMPSON H2.5a @ Ea. Truss End (Typ. U.O.N.)
Wall Tension: Wall Sheathing Nailing is Adequate - 8d @ 4" O.C. Top & Bot.
Anchor Bolts: 1/2" A307 Bolts @ 48" O.C. - 1st Bolt 12"-16" from corner
Corner Hold-down Device: (1) HTT5 @ each corner
Porch Column Base Connector: Simpson ABU66 @ each column
Porch Column to Beam Connector: Simpson EPC66/PC66 @ each column

FOOTINGS AND FOUNDATIONS

Footing: 12"W x 20"D X CONT., CONCRETE FOOTING W/ 2 #5 REBAR.
Int. Footings: 12"x 12" x Cont. W/ 2 - #5 Bars Cont. on wire/plastic chairs @ 48" o.c.

STRUCTURAL DESIGN CRITERIA:

1. THE DESIGN COMPLIES WITH THE REQUIREMENTS OF THE 2023 FLORIDA, 8th EDITION BUILDING CODE - SECTION 1609 AND OTHER REFERENCED CODES AND SPECIFICATIONS. ALL CODES AND SPECIFICATIONS SHALL BE LATEST EDITION AT TIME OF PERMIT.

2. WIND LOAD CRITERIA: RISK CATAGORY: 2, EXPOSURE: "B"

BASED ON ANSI/ASCE 7-22. 2023 FBC 1609-A WIND VELOCITY: V_{ULT} = 130 MPH
V_{ASD} = 101 MPH

3. ROOF DESIGN LOADS:
SUPERIMPOSED DEAD LOADS: . . . . 20 PSF
SUPERIMPOSED LIVE LOADS: . . . . 20 PSF

4. FLOOR DESIGN LOADS:
SUPERIMPOSED DEAD LOADS: . . . . 25 PSF
SUPERIMPOSED LIVE LOADS:
RESIDENTIAL . . . . 40 PSF
BALCONIES . . . . 60 PSF

5. WIND NET UPLIFT: ARE AS INDICATED ON PLANS

TERMITE PROTECTION NOTES:

SOIL CHEMICAL BARRIER METHOD:

1. A PERMANENT SIGN WHICH IDENTIFIES THE TERMITE TREATMENT PROVIDER AND NEED FOR REINSPECTION AND TREATMENT CONTRACT RENEWAL SHALL BE PROVIDED. THE SIGN SHALL BE POSTED NEAR THE WATER HEATER OR ELECTRIC PANEL. FBC 104.2.6
2. CONDENSATE AND ROOF DOWNSPOUTS SHALL DISCHARGE AT LEAST 1'-0" AWAY FROM BUILDING SIDE WALLS. FBC 1503.4.4
3. IRRIGATION/SPRINKLER SYSTEMS INCLUDING ALL RISERS AND SPRAY HEADS SHALL NOT BE INSTALLED WITHIN 1'-0" FROM BUILDING SIDE WALLS. FBC 1503.4.4
4. TO PROVIDE FOR INSPECTION FOR TERMITE INFESTATION, BETWEEN WALL COVERINGS AND FINAL EARTH GRADE SHALL NOT BE LESS THAN 6".
EXCEPTION: PAINT AND DECORATIVE CEMENTIOUS FINISH LESS THAN 5/8" THICK ADHERED DIRECTLY TO THE FOUNDATION WALL. FBC 1403.1.6
5. INITIAL TREATMENT SHALL BE DONE AFTER ALL EXCAVATION AND BACKFILL IS COMPLETE. FBC 1816.1.1
6. SOIL DISTURBED AFTER THE INITIAL TREATMENT SHALL BE RETREATED INCLUDING SPACES BOXED OR FORMED. FBC 1816.1.2
7. BOXED AREAS IN CONCRETE FLOOR FOR SUBSEQUENT INSTALLATION OF TRAPS, ETC., SHALL BE MADE WITH PERMANENT METAL OR PLASTIC FORMS. PERMANENT FORMS MUST BE OF A SIZE AND DEPTH THAT WILL ELIMINATE THE DISTURBANCE OF SOIL AFTER THE INITIAL TREATMENT. FBC 1816.1.3
8. MINIMUM 6 MIL VAPOR RETARDER MUST BE INSTALLED TO PROTECT AGAINST RAINFALL DILUTION. IF RAINFALL OCCURS BEFORE VAPOR RETARDER PLACEMENT, RETREATMENT IS REQUIRED. FBC 1816.1.4
9. CONCRETE OVERPOUR AND MORTAR ALONG THE FOUNDATION PERIMETER MUST BE REMOVED BEFORE EXTERIOR SOIL TREATMENT. FBC 1816.1.5
10. SOIL TREATMENT MUST BE APPLIED UNDER ALL EXTERIOR CONCRETE OR GRADE WITHIN 1'-0" OF THE STRUCTURE SIDEWALLS. FBC 1816.1.6
11. AN EXTERIOR VERTICAL CHEMICAL BARRIER MUST BE INSTALLED AFTER CONSTRUCTION IS COMPLETE INCLUDING LANDSCAPING AND IRRIGATION. ANY SOIL DISTURBED AFTER THE VERTICAL BARRIER IS APPLIED, SHALL BE RETREATED. FBC 1816.1.6
12. ALL BUILDINGS ARE REQUIRED TO HAVE PER-CONSTRUCTION TREATMENT. FBC 1816.1.7
13. A CERTIFICATE OF COMPLIANCE MUST BE ISSUED TO THE BUILDING DEPARTMENT BY # LICENSED PEST CONTROL COMPANY BEFORE A CERTIFICATE OF OCCUPANCY WILL BE ISSUED. THE CERTIFICATE OF COMPLIANCE SHALL STATE: "THE BUILDING HAS RECEIVED A COMPLETE TREATMENT FOR THE PREVENTION OF SUBTERRANEAN TERMITES. THE TREATMENT IS IN ACCORDANCE WITH THE RULES AND LAWS OF THE FLORIDA DEPARTMENT OF AGRICULTURE AND CONSUMER SERVICES". FBC 1816.1.7
14. AFTER ALL WORK IS COMPLETED, LOOSE WOOD AND FILL MUST BE REMOVED FROM BELOW AND WITHIN 1'-0" OF THE BUILDING. THIS INCLUDES ALL GRADE STAKES, TUB TRAP BOXES, FORMS, SHORING OR OTHER CELLULOSE CONTAINING MATERIAL. FBC 2303.1.3
15. NO WOOD, VEGETATION, STUMPS, CARDBOARD, TRASH, ETC., SHALL BE BURIED WITHIN 15'-0" OF ANY BUILDING OR PROPOSED BUILDING. FBC 2303.1.4

FRAMING ANCHOR SCHEDULE

APPLICATION	MANUF'R/MODEL	CAP.
TRUSS TO WALL:	SIMPSON H2.5a or SDWC15600	600#
GIRDER TRUSS TO POST/HEADER:	SIMPSON LGT, W/ 28 - 16d NAILS	1785#
HEADER TO KING STUD(S):	SIMPSON ST22	1370#
PLATE TO STUD:	NO CONNECTION REQ. WHEN USING WINDSTORM BOARD	
STUD TO SILL:	NO CONNECTION REQ. WHEN USING WINDSTORM BOARD	
PORCH BEAM TO POST:	SIMPSON PC66/EPC66	1700#
PORCH POST TO FND.:	SIMPSON ABU66	2200#
MISC. JOINTS	SIMPSON A34	315#/240#

NOTE:
ALL ANCHORS SHALL BE SECURED W/ NAILS AS PRESCRIBED BY THE MANUFACTURER FOR MAXIMUM JOINT STRENGTH, UNLESS NOTED OTHERWISE.

NOTE:
REFER TO THE INCLUDED STRUCTURAL DETAILS FOR ADDITIONAL ANCHORS/ JOINT REINFORCEMENT AND FASTENERS.

NOTE:
ALL UNLISTED JOINTS IN THE LOAD PATH SHALL BE REINFORCED WITH SIMPSON A34 FRAMING ANCHORS, TYPICAL T.O.

NOTE:
"SEMCO" PRODUCT APPROVAL:
MIAMI/DADE COUNTY REPORT #95-0818.15

NOTE:
"SIMPSON" PRODUCT APPROVALS:
MIAMI/DADE COUNTY REPORT #97-0107.05, #96-1126.11, #99-0623.04
SBCCI NER-443, NER-393

BUILDING COMPONENTS & CLADDING LOADS
MEAN BUILDING HEIGHT = 30.0', EXPOSURE "B"
ROOF ANGLE 7˚ TO 27˚

	ZONE	AREA	Vult 110 MPH	Vult 120 MPH	Vult 130 MPH	Vult 140 MPH
ROOF 7˚ TO 27˚	1	10	12.0 / -19.9	14.9 / -23.7	17.5 / -27.8	20.3 / -32.3
	1	20	11.4 / -19.4	13.6 / -23.0	16.0 / -27.0	18.5 / -31.4
	1	50	10.0 / -18.6	11.9 / -22.2	13.9 / -26.0	16.1 / -30.2
	2	10	12.5 / -34.7	14.9 / -41.3	17.5 / -48.4	20.3 / -56.2
	2	20	11.4 / -31.9	13.6 / -38.0	16.0 / -44.6	18.5 / -51.7
	2	50	10.0 / -28.2	11.9 / -33.6	13.9 / -39.4	16.1 / -45.7
	3	10	12.5 / -51.3	14.9 / -61.0	17.5 / -71.6	20.3 / -83.1
	3	20	11.4 /-47.9	13.6 / -57.1	16.0 / -67.0	18.5 / -77.7
	3	50	10.0 / -43.5	11.9 / -51.8	13.9 / -60.8	16.1 / -70.5
WALL	4	10	21.8 / -23.6	25.9 / -34.7	30.4 / -33.0	35.3 / -38.2
	4	20	20.8 / -22.6	24.7 / -26.9	29.0 / -31.6	33.7 / -36.7
	4	50	19.5 / -21.3	23.2 / -25.4	27.2 / -29.8	31.6 / -34.6
	5	10	21.8 / -29.1	25.9 / -34.7	30.4 /-40.7	35.3 / -47.2
	5	20	20.8 / -27.2	24.7 / -32.4	29.0 / -38.0	33.7 / -44.0
	5	50	19.5 / -24.6	23.2 / -29.3	27.2 / -34.3	31.6 / -39.8

HEIGHT & EXPOSURE ADJUSTMENT COEFFICIENTS
FOR BUILDING COMPONENTS & CLADDING

BLDG HEIGHT	EXPOSURE "B"	EXPOSURE "C"	EXPOSURE "D"
15	.82	1.21	1.47
20	.89	1.29	1.55
25	.94	1.35	1.61
30	1.00	1.40	1.66

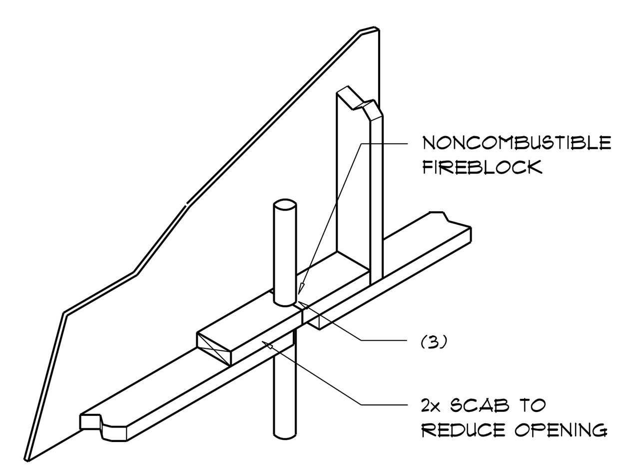

PENETRATIONS

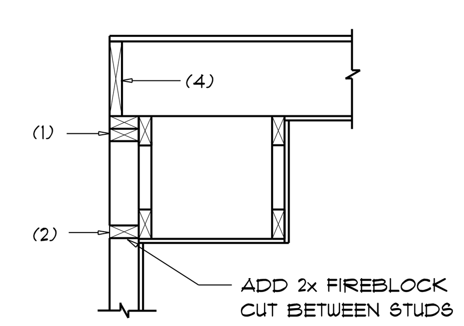

SOFFIT/DROPPED CLG.

FIREBLOCKING NOTES:

FIREBLOCKING SHALL BE INSTALLED IN WOOD FRAME CONSTRUCTION IN THE FOLLOWING LOCATIONS:

1. IN CONCEALED SPACES OF STUD WALLS AND PARTITIONS INCLUDING FURRED SPACES AT CEILING AND FLOOR LEVELS.
2. AT ALL INTERCONNECTIONS BETWEEN CONCEALED VERTICAL AND HORIZONTAL SPACES SUCH AS OCCUR AT SOFFITS, DROP CEILINGS, COVE CEILINGS, ETC.
3. AT OPENINGS AROUND VENTS, PIPES, DUCTS, CHIMNEYS AND FIREPLACES AT CEILING AND FLOOR LEVELS WITH "PYROPANEL MULTIFLEX SEALANT"
4. AT ALL INTERCONNECTIONS BETWEEN CONCEALED VERTICAL STUD WALL OR PARTITION SPACES AND CONCEALED SPACES CREATED BY AN ASSEMBLY OF FLOOR JOISTS, FIREBLOCKING SHALL BE PROVIDED FOR THE FULL DEPTH OF THE JOISTS AT THE ENDS AND OVER THE SUPPORTS.

Fire Stopping DETAILS — A

SCALE: NONE

General Roofing NOTES:

DECK REQUIREMENTS:
ASPHALT SHINGLES SHALL BE FASTENED TO SOLIDLY SHEATHED DECKS.

SLOPE:
ASPHALT SHINGLES SHALL BE USED ONLY ON ROOF SLOPES OF 2:12 OR GREATER. FOR ROOF SLOPES FROM 2:12 TO 4:12, DBL. UNDERLAYMENT IS REQUIRED.

UNDERLAYMENT:
TWO LAYERS OF ASTM D226 TYPE II or ASTM D4869 TYPE III or TYPE IV UNDERLAYMENT SHALL BE INSTALLED AS FOLLOWS:

1. STARTING AT THE EAVE, A 19 INCH STRIP OF UNDERLAYMENT SHALL BE APPLIED PARALLEL WITH THE EAVE AND FASTENED SUFFICIENTLY TO STAY IN PLACE.
2. STARTING AT THE EAVE, 36 INCH WIDE STRIPS OF UNDERLAYMENT FELT SHALL BE APPLIED OVERLAPPING SUCCESSIVE SHEETS 19 INCHES AND FASTENED SUFFICIENTLY TO STAY IN PLACE.

ASPHALT SHINGLES:
ASPHALT SHINGLES SHALL HAVE SELF SEAL STRIPS OR BE INTERLOCKING, AND COMPLY WITH ASTM D 225 OR ASTM D 3462.

FASTENERS:
FASTENERS FOR ASPHALT SHINGLES SHALL BE GALVANIZED, STAINLESS STEEL, ALUMINUM OR COPPER ROOFING NAILS, MINIMUM 12 GAUGE SHANK WITH A MINIMUM 3/8 INCH DIAMETER HEAD, OF A LENGTH TO PENETRATE THROUGH THE ROOFING MATERIAL AND A MINIMUM 3/4" INTO THE ROOF SHEATHING. WHERE THE SHEATHING IS LESS THAN 3/4" THICK, THE NAILS SHALL PENETRATE THROUGH THE SHEATHING.

ATTACHMENT:
ASPHALT SHINGLES SHALL BE SECURED TO THE ROOF WITH NOT LESS THAN FOUR FASTENERS PER STRIP SHINGLE OR TWO FASTENERS PER INDIVIDUAL SHINGLE. WHERE ROOFS LOCATED IN BASIC WIND SPEED OF 110 MPH OR GREATER, SPECIAL METHODS OF FASTENING ARE REQUIRED. UNLESS OTHERWISE NOTED, ATTACHMENT OF ASPHALT SHINGLES SHALL CONFORM WITH ASTM D 3161 OR M-DC PA 107-95.

BASE AND CAP FLASHINGS:
BASE AND CAP FLASHING SHALL BE INSTALLED IN ACCORDANCE W/ MFGR'S INSTALLATION INSTRUCTIONS. BASE FLASHING SHALL BE OF EITHER CORROSION RESISTANT METAL OF MINIMUM NOMINAL THICKNESS 0.019 INCH OR MINERAL SURFACE ROLL ROOFING WEIGHING A MINIMUM OF 77 LBS PER 100 SQUARE FEET. CAP FLASHING SHALL BE CORROSION RESISTANT METAL OF MINIMUM NOMINAL THICKNESS OF 0.019 INCH.

VALLEYS:
VALLEY LININGS SHALL BE INSTALLED IN ACCORDANCE W/ MANUFACTURER'S INSTALLATION INSTRUCTIONS BEFORE APPLYING ASPHALT SHINGLES. VALLEY LININGS OF THE FOLLOWING TYPES SHALL BE PERMITTED.

1. FOR OPEN VALLEYS LINED WITH METAL, THE VALLEY LINING SHALL BE AT LEAST 16" WIDE AND OF ANY OF THE CORROSION RESISTANT METALS IN FBC TABLE 1507.3.9.2.
2. FOR OPEN VALLEYS, VALLEY LINING OF TWO PLIES OF MINERAL SURFACE ROLL ROOFING SHALL BE PERMITTED. THE BOTTOM LAYER SHALL BE 18 INCHES AND THE TOP LAYER A MINIMUM OF 36 INCHES WIDE.
3. FOR CLOSED VALLEYS VALLEY LINING SHALL BE ONE OF THE FOLLOWING:
   1. BOTH TYPES 1 AND 2 ABOVE, COMBINED.
   2. ONE PLY OF SMOOTH ROLL ROOFING AT LEAST 36 INCHES WIDE AND COMPLYING WITH ASTM D 224.
   3. SPECIALTY UNDERLAYMENT AT LEAST 36 INCHES WIDE AND COMPLYING WITH ASTM D 1970.

NV5
PRIVATE PROVIDER
Plans reviewed in accordance with Florida Statues 553.791

Printed copied of this document are NOT considered signed, and the signature must be verified on any electronic copies.

I hereby certify that, to the best of my knowledge and belief, the plans submitted comply with the Florida Building Code and all local amendments in effect on the date of the intial permit applicaiton. Review for code compliance does not relieve the Contractor from errors and omissions nor is to be held to permit or approve any violation of City, County, State or Federal regulation, ordinance, or code of law.

Jason McClellan PX3352
License # X3352 RPX521

REVISIONS
May 1st, 2023

A NEW SPEC HOUSE FOR:
Parrish Builders Group – Spec #2
GHILCHRIST COUNTY, FL

NICHOLAS PAUL GEISLER ARCHITECT
N.C.A.R.B. Certified
1758 NW Brown Rd.
Lake City, FL 32055
(386) 755-9021

SHEET NUMBER
S.3
OF 4 SHEETS

Nicholas Geisler
Digitally signed by Nicholas Geisler
Date: 2025.02.26 16:06:44 -05'00'
AR0007005