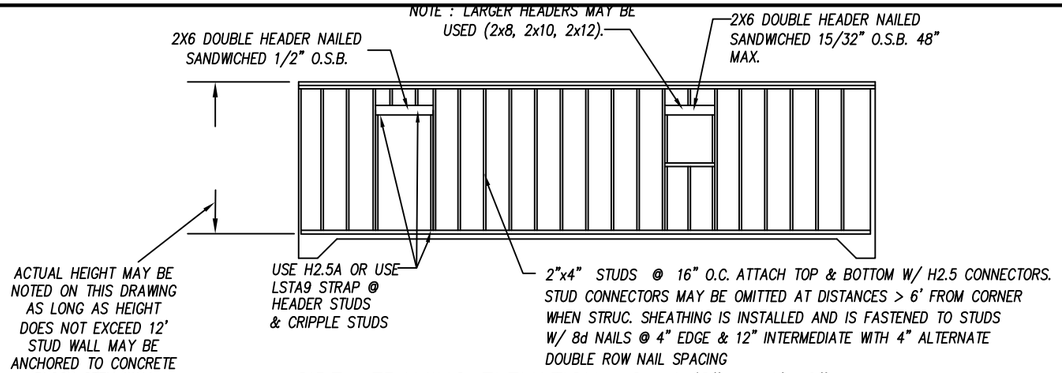

SIDE FRAMING ELEVATION @ 1/8" = 1'-0"

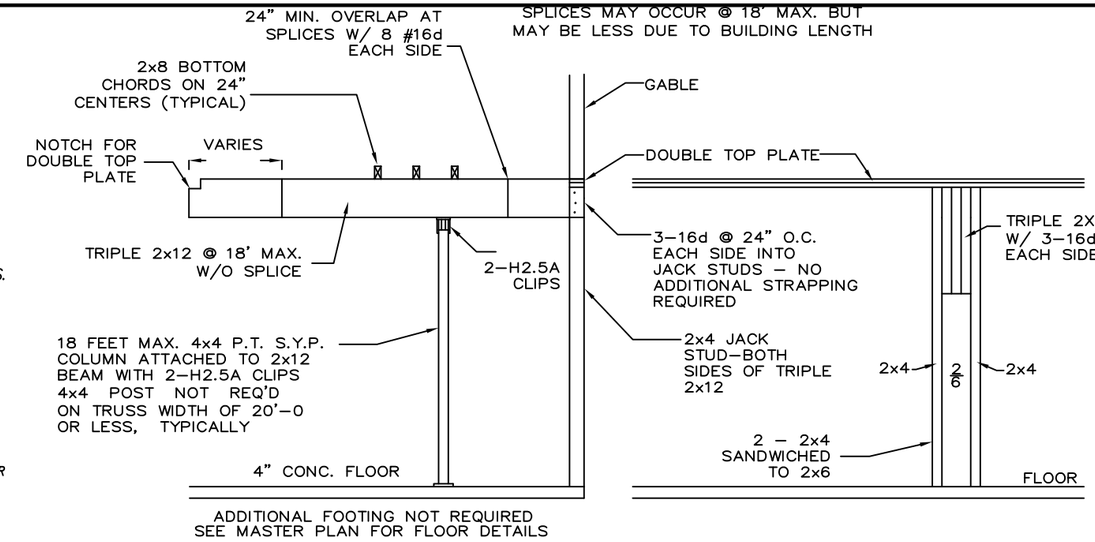

SIDE VIEW

FRONT VIEW

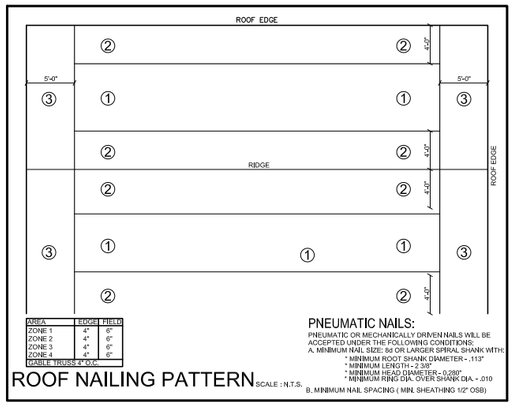

ROOF NAILING PATTERN SCALE : N.T.S.

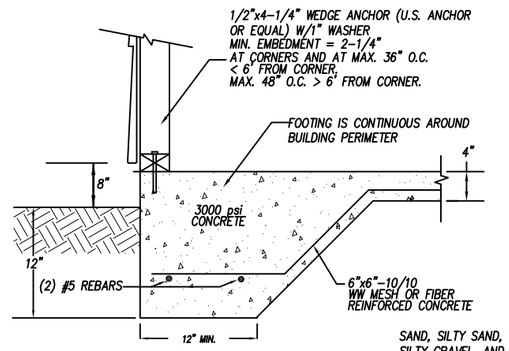

SECTION A-A THRU FOOTING
SCALE: N.T.S.
* OK TO INCREASE FOOTING SIZE TO MEET LOCAL CODES IF APPLICABLE.

SAND, SILTY SAND, CLAYEY SAND, SILTY GRAVEL, AND CLAYEY GRAVEL HAS A PRESUMPTIVE LOAD BEARING VALUE OF 2,000 PSF. PER THE FBC CURRENT EDITION. R401.4.1 TABLE

BLOCKING NOT REQUIRED ON ROOF SHEATHING THAT IS 16" OR WIDER. BLOCKING NOT REQUIRED @ SPLICE IN ROOF SHEATHING WHEN USING 2 SIMPSON 1/2" PANEL SHEATHING CLIPS BETWEEN TRUSSES AND OSB SPLICE. BLOCKING NOT REQUIRED UNDER RIDGE VENT

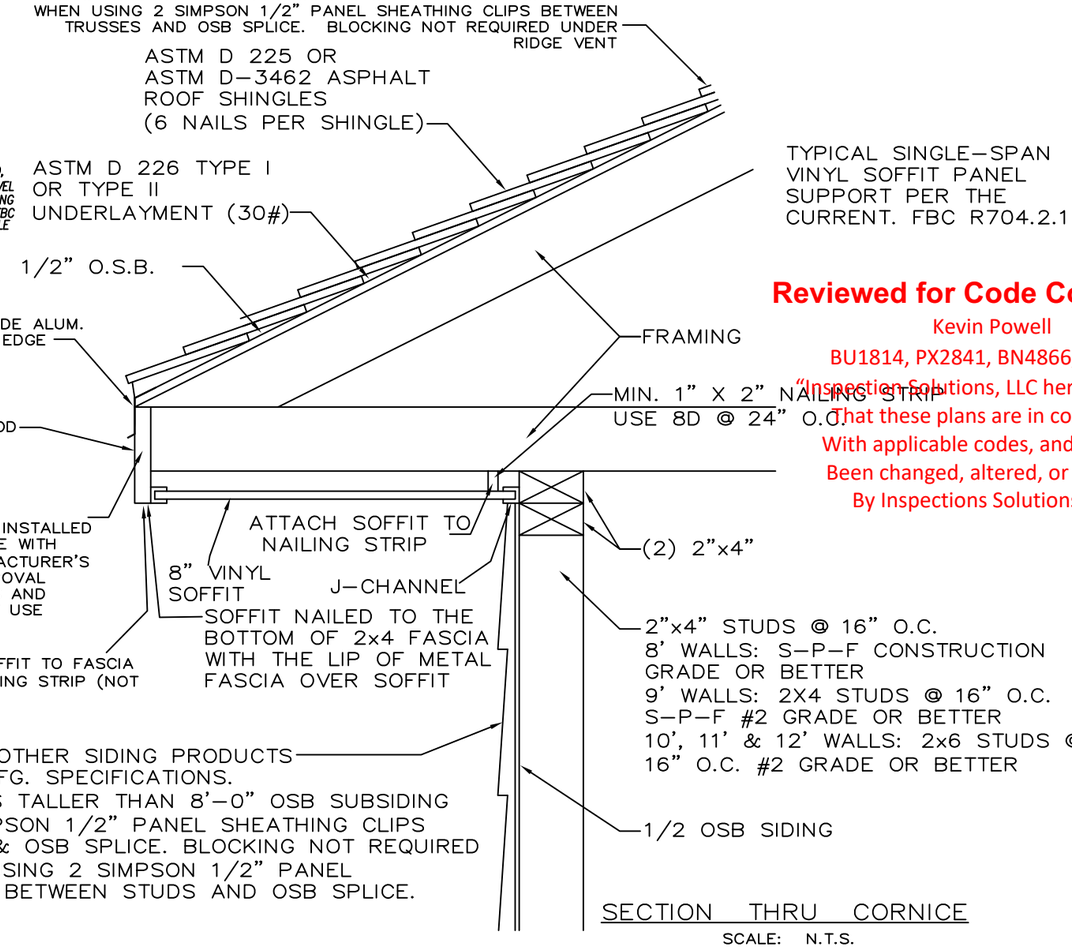

SECTION THRU CORNICE
SCALE: N.T.S.

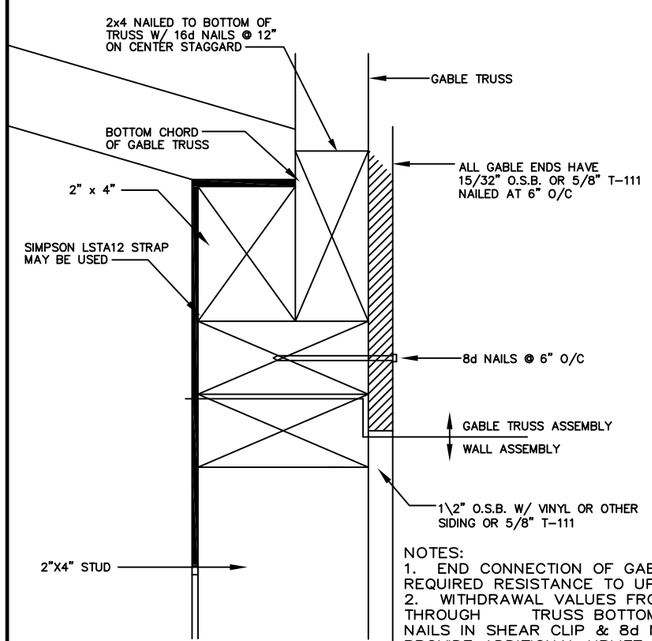

TYPICAL SECTION OF GABLE TRUSS CONNECTION
SCALE: N.T.S.

NOTES:
1. END CONNECTION OF GABLE TRUSS PROVIDES REQUIRED RESISTANCE TO UPLIFT.
2. WITHDRAWAL VALUES FROM 16d NAILS THROUGH TRUSS BOTTOM CHORD, 8d OR 10d NAILS IN SHEAR CLIP & 8d NAILS IN O.S.B. PROVIDE ADDITIONAL UPLIFT & SHEAR RESISTANCE.
3. THIS DETAIL INDICATES CONNECTIONS TO PROVIDE SHEAR RESISTANCE FOR GABLE TRUSS.

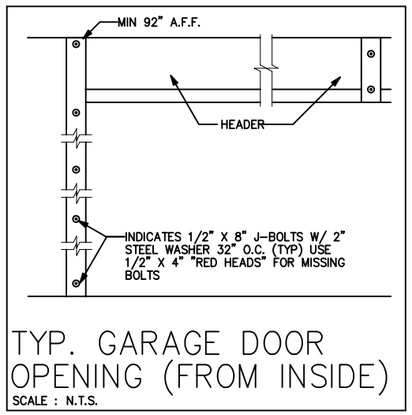

TYP. GARAGE DOOR OPENING (FROM INSIDE)
SCALE : N.T.S.

Reviewed for Code Compliance
Kevin Powell
BU1814, PX2841, BN4866, RPX329
"Inspection Solutions, LLC hereby certifies
That these plans are in compliance
With applicable codes, and have not
Been changed, altered, or modified
By Inspections Solutions, LLC"

2025.11.20 00:30:46 -05'00'

THIS ITEM HAS BEEN ELECTRONICALLY SIGNED AND SEALED BY STEVEN A. HEPNER USING A DIGITAL SIGNATURE. PRINTED COPIES OF THIS DOCUMENT ARE NOT CONSIDERED SIGNED AND SEALED AND THE SIGNATURE MUST BE VERIFIED ON ANY ELECTRONIC COPIES

STATE OF FLORIDA STEVEN A. HEPNER AR0010620 REGISTERED ARCHITECT

THIS SET OF PLANS MEETS OR EXCEEDS 150 MPH WINDLOADS AS PER THE FLORIDA BUILD CODE 2023, 8TH EDITION R-301

W D S DESIGN GROUP INC.
DESIGNERS OF QUALITY HOMES
Residential * Light Commercial * Engineering
2512 Hendon Avenue, Winter Park (Mailing) (407) 298-3849
Phone (407) 308-4670 Fax (407) 298-3849
e-mail : wshaffer8@cfl.rr.com

STEVEN HEPNER
AR. 0010620

Project Number: 08-012
Preliminary Input:
Version Date:

DRAWING TYPES : Master Garage Builders Inc
DRAWING TYPES : DETAILS

MURRAY RES

NOV 2025

SHEET: 4 of 4